AGENDA
PLANNING COMMISSION
CITY OF PORT ORANGE

Meeting Date: Thursday, July 28, 2016 **Time:** 5:30 PM

Type of Meeting: Regular **Location:** Council Chambers
City Hall, 1000 City Center Circle

A. CALL TO ORDER

1. Pledge of Allegiance
2. Silent Invocation
3. Roll Call

B. DISCUSSION/ACTION

4. Consideration of Minutes
5. Case No. 16-50000002
   SUBDIVISION PLAT AND PLANS/WESTPORT RESERVE SUBDIVISION
   Between Tomoka Farms Road and Royal Palm Subdivision

   A request for approval of the Westport Reserve Subdivision. If approved, the applicant intends to subdivide the +/- 148.7-acre property into 17 tracts of land for stormwater, tree preservation, future residential development, the Sanctuary at Westport multi-family development (currently under construction) and 64 single-family lots and construct the required subdivision infrastructure and improvements for the 64 single-family lots.

   Staff Contact: Gwen Perney (386) 506-5673/gperney@port-orange.org

C. OTHER BUSINESS

6. Development Activity Report
7. Commissioner Comments
8. Staff Comments

D. PUBLIC COMMENTS

E. ADJOURNMENT

ANY PERSON WHO DECIDES TO APPEAL ANY DECISION MADE BY THE **PLANNING COMMISSION** WILL NEED A RECORD OF THE PROCEEDINGS, AND FOR SUCH PURPOSE HE OR SHE MAY NEED TO ENSURE AT HIS OR HER OWN EXPENSE FOR THE TAKING AND PREPARATION OF A VERBATIM RECORD OF ALL TESTIMONY AND EVIDENCE OF THE PROCEEDINGS UPON WHICH THE APPEAL IS TO BE BASED. NOTE: IF YOU ARE A PERSON WITH A DISABILITY WHO NEEDS ANY ACCOMMODATION IN ORDER TO PARTICIPATE IN THIS PROCEEDING, YOU

PLANNING COMMISSION MEETING MINUTES
CITY OF PORT ORANGE
1000 CITY CENTER CIRCLE
COUNCIL CHAMBERS
JUNE 23, 2016

THE REGULAR MEETING OF THE PLANNING COMMISSION of the City of Port Orange was called to order by Chairman John Junco at 5:30 p.m.

Pledge of Allegiance

Silent Prayer

ROLL CALL:	Present:	Lance Green John Junco Newton White Mike Arminio Frank Crooks
	Absent:	Thomas Jordan Maria Mills-Benat
	Also Present:	Matthew Jones, Deputy City Attorney Robin Fenwick, City Clerk

DISCUSSION/ACTION

4. Consideration of Minutes – May 26, 2016

Motion to approve the Minutes of May 26, 2016 was made by Commissioner Arminio, and Seconded by Commissioner Crooks. Motion carried unanimously by roll call vote.

5. CASE NO. 16-70000001
SPECIAL EXCEPTION/GAME/RECREATION FACILITY
3510 NOVA ROAD

A request to approve a Special Exception to allow a game/recreation facility within the Community Commercial (CC) zoning district.

Staff Contact: Penelope Cruz (386) 506-5671/pcruz@port-orange.org

Penny Cruz, Planner, advised that the applicant withdrew the application prior to the meeting.

6. CASE NO. 16-25000002

LDC TEXT AMENDMENT/CHAPTERS 2 AND 17

An administrative request to amend sections of the Land Development Code (LDC) to allow a property owner to request approval of a Master Development Agreement (MDA) and Conceptual Development Plan (CDP) for property within the Planned Community-Agriculture (PC-A) Workplace zoning district.

Staff Contact: Penelope Cruz (386) 506-5671/pcruz@port-orange.org

Ms. Cruz provided details of the application. There were no questions from the Commissioners.

Motion to approve Case No. 16-25000002 was made by Commissioner Crooks, and Seconded by Commissioner Arminio. Motion carried unanimously by roll call vote.

OTHER BUSINESS

7. Development Activity Report

Commissioners asked questions of Staff regarding the following: Waffle House, the old Hess gas station on Taylor Road, and Cumberland Farms wall.

8. Commissioner Comments

Commissioner White explained a new concept of Granny Pods and asked if they would be allowed in current zoning. He would like Staff to research the concept to see if they are feasible.

Commissioner Arminio asked for a moratorium along the US 1 Corridor and eliminate certain uses such as used car lots, thrift stores, etc. Ms. Cruz advised that thrift stores are defined as retail but Staff will look into it.

9. Staff Comments

There were none.

PUBLIC COMMENTS

There were none.

ADJOURNMENT: 5:49 p.m.

Chairman John Junco

STAFF REPORT
SUBDIVISION PLAT & PLANS /WESTPORT RESERVE
CASE NO. 16-50000002

REQUEST:	Approval of the Westport Reserve Subdivision Plat and Plans
LOCATION:	South of Town West Boulevard west of Royal Palm PUD Subdivision and east of Tomoka Farms Road (See Figure 1)
OWNER:	Edge Cove LLC
APPLICANT:	Jonathan Claber, Edge Cove LLC
STAFF RECOMMENDATION:	Approval
STAFF CONTACT:	Gwen Perney (386) 506-5673
PLANNING COMMISSION DATE:	July 28, 2016

DISCUSSION:

The applicant requests approval of the Westport Reserve Subdivision. If approved, the applicant intends to subdivide the +/- 148.7-acre property into 17 tracts of land. The proposal includes a 64 single-family lot subdivision, area for future residential development, and tracts for tree preservation, stormwater retention, and open space. The plat also incorporates the Sanctuary at Westport multi-family development that is currently under construction. The subject property is located south of Town West Boulevard, between the Royal Palm PUD subdivision and Tomoka Farms Road.

Figure 1. Location Map

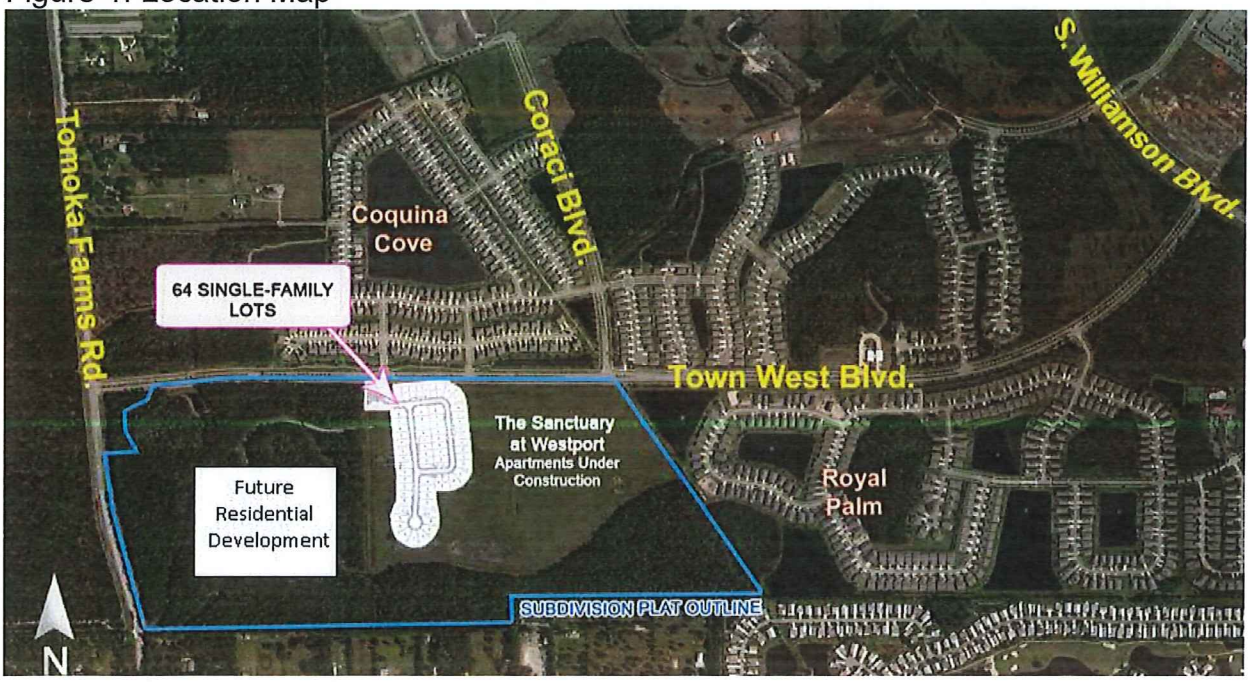

The subject property is zoned "PC-A" (Planned Community Agriculture) Neighborhood District and has a Future Land Use designation of Planned Community No. 1. The PC-A Neighborhood zoning district is intended to accommodate a variety of standard suburban housing types at varying densities. Single-family, two-family, and multi-family housing are all permitted uses in this zoning district.

The plat and subdivision plans have been designed according to the requirements of the City's Land Development Code (LDC) and the dimensional standards outlined in the PC-A neighborhood zoning district of the LDC.

The Sanctuary at Westport Multi-Family Lot: The required infrastructure (water, sewer, drainage, driveways, turn lanes, landscaping, and construction of a portion of Coraci Boulevard) to serve the 360-unit multi-family development was approved under the site plan review requirements and is currently under construction. The applicant proposes to now include this site in the Westport Reserve Plat area.

64 Single-Family Lots Residential Development: The following subdivision improvements will be constructed before or simultaneously with the development of the first lot:

- Access onto Town West Blvd. and stub-out for future connection to adjacent tracts;
- Water, sewer, and reclaimed water infrastructure;
- Public local streets (Lido Way, Hutchinson Street, and Estero Loop) within the subdivision;
- A left-turn lane on Town West Blvd. into the subdivision;
- Stormwater drainage infrastructure;
- Sidewalks and streetlights along Lido Way, Hutchinson Street, and Estero Loop;
- 20' landscape buffer with a 3' tall berm and decorative split-rail fence along Town West Blvd.;
- Entry signage and landscaping at the Town West Blvd. entrance
- Decorative pavers and landscaped median in the Lido Way right-of-way (requires a separate License Agreement)
- Common area amenities including a children's playground, open play field, mail kiosk area with associated off-street parking, and sidewalks around the stormwater retention areas.

CONCURRENCY REVIEW:

The Sanctuary at Westport Multi-Family Lot:
Public facilities and services are available for the 360-unit multi-family development. Concurrency reviews for Transportation, Water, Sewer, Solid Waste, and Stormwater Drainage were completed for the multi-family lot when the site plan for the Sanctuary at Westport was approved in June 2016.

64 Single-Family Lots Residential Development:
Public facilities and services, such as roads, public infrastructure, schools, and recreational facilities are currently available to serve the proposed 64 residential lots. Any future phases will be separately evaluated for concurrency at the time of

subdivision review. The following discussion summarizes the impacts the proposed development will have on the public facilities and services.

Water, Sewer, Reclaimed Water:
The proposed phase will be served by potable water, sanitary sewer, and reclaimed water. All lots will be provided with stub-outs for utilities. The developer will construct potable water, sanitary sewer, and reclaimed water lines in accordance with the utility plan for this project.

Staff from the Public Utilities Department have worked with the applicant to master design the utilities for this area to ensure that adequate capacity will exist and that correct connections will be provided for future development of the project to the west of this phase.

Stormwater Drainage:
The City's adopted level-of-service standard for stormwater drainage requires that all new retention/detention facilities be able to treat and convey the runoff from the 25-year, 24-hour storm event without causing flooding or pollution of receiving waterbodies. In addition, there must be no net loss of stormwater retention function as a result of development; therefore, the subdivision property must have the same ability to store and discharge water after development as it does before development occurs.

Recreation and Open Space:
According to the City's 2015 Concurrency Management Report, the City is not deficient in any of the recreational facilities categories and there are sufficient facilities to support the additional population from this subdivision phase.

School Capacity:
The Volusia County School District determined that the adopted level of service will be met and capacity exists in the schools for the estimated students to be generated by the proposed subdivision.

Transportation:
The developer will be required to enter into a Fair-Share Agreement with the City to mitigate the impact of the new traffic generated from the 64 single-family home subdivision. The Traffic Impact Analysis anticipates an additional 618 vehicle trips generated per day from Phase 2B. The fair-share payment will be credited towards the Summer Trees Road extension project that was completed in 2008.

Consistency with the Comprehensive Plan:
The subject property has a FLU designation of *Planned Community No. 1* on the City's Future Land Use Map. According to the Comprehensive Plan, the maximum gross residential density for the 148.7-acre overall PC-A area is four units/acre. With the addition of 64 single-family lots along with the 360 approved multi-family units, the overall density for the 148.7-acre area will be 2.85 units per acre. The development of the proposed single-family home subdivision and multi-family development is consistent with the intent of the FLU designation and permitted uses in the PC-A Neighborhood zoning district.

DEVELOPMENT REVIEW COMMITTEE (DRC):
The Development Review Committee (DRC) has reviewed this proposal and the applicant will need to address some minor comments related to the format and labeling on the plat and plans prior to this item being considered by the City Council.

RECOMMENDATION:
Staff recommends **approval** of the final plat and plans for Westport Reserve, Phase 2B, subject to outstanding technical comments being addressed prior to City Council review.

WESTPORT RESERVE

LYING IN SECTIONS 13 AND 14, TOWNSHIP 16 SOUTH, RANGE 32 EAST, CITY OF PORT ORANGE, VOLUSIA COUNTY, FLORIDA

MAP BOOK: PAGE:

TRACT TABLE

TRACT	USE	AREA (ACRES)
A	COMMON OPEN SPACE	0.093
B	COMMON OPEN SPACE	0.619
C	COMMON OPEN SPACE	3.494
D	COMMON OPEN SPACE	0.153
E	COMMON OPEN SPACE/ STORMWATER DRAINAGE	5.201
F	COMMON OPEN SPACE	9.900
G	FUTURE DEVELOPMENT	9.314
H	FUTURE DEVELOPMENT	50.942
I	COMMON OPEN SPACE	9.512
J	COMMON OPEN SPACE	0.923
K	STORMWATER DRAINAGE	2.907
L	FUTURE DEVELOPMENT	5.111
M	COMMON OPEN SPACE	3.556
N	COMMON OPEN SPACE/ STORMWATER DRAINAGE	11.185
O	RIGHT OF WAY	0.003
P	RIGHT OF WAY	0.003
Q	TREE PRESERVATION	5.057

LEGEND AND ABBREVIATIONS:

AC	ACRES
CB	CHORD BEARING
CCR	CERTIFIED CORNER RECORD
CH	CHORD DISTANCE
℄	CENTER LINE
CM	CONCRETE MONUMENT
D.E.	DRAINAGE EASEMENT
FND	FOUND
ID	IDENTIFICATION
IP	IRON PIPE
IPC	IRON PIPE & CAP
IR	IRON ROD
IRC	IRON ROD & CAP
L	ARC LENGTH
LB	LICENSED BUSINESS
M.B.	MAP BOOK
N/D	NAIL & DISK
NO.	NUMBER
(NR)	NON-RADIAL
ORB	OFFICIAL RECORDS BOOK
(OA)	OVERALL
(P)	PLAT
PC	POINT OF CURVATURE
PCP	PERMANENT CONTROL POINT
PG(S).	PAGE/PAGES
PI	POINT OF INTERSECTION
PLS	PROFESSIONAL LAND SURVEYOR
PNT	POINT OF NON-TANGENCY
PRC	POINT OF REVERSE CURVATURE
PRL	POINT ON A RADIAL LINE
PRM	PERMANENT REFERENCE MONUMENT
PSM	PROFESSIONAL SURVEYOR MAPPER
PT	POINT OF TANGENCY
R	RADIUS
(R)	RADIAL
R/W	RIGHT OF WAY
SEC	SECTION-TOWNSHIP-RANGE
(TYP)	TYPICAL
U.E.	UTILITY EASEMENT
△	CENTRAL ANGLE
-/\/-	BREAK LINE

SHEET INDEX

SHEET 1 - COVER SHEET, NOTES, LEGEND/ABBREVIATIONS
SHEET 2 - KEY MAP
SHEETS 3 TO 12 - DETAIL SHEETS

VICINITY MAP (NOT TO SCALE)

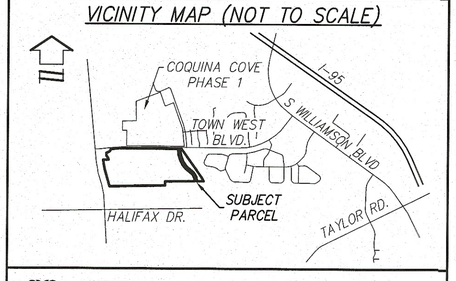

Dewberry

131 WEST KALEY STREET
ORLANDO, FLORIDA 32806
PHONE: 321.354.9826 FAX: 407.648.9104
WWW.DEWBERRY.COM
CERTIFICATE OF AUTHORIZATION NO. LB 8011

GENERAL NOTES:

1. MONUMENTATION:
   - ⊡ – DENOTES PERMANENT REFERENCE MONUMENT FOUND STAMPED AS NOTED
   - ■ – DENOTES PERMANENT REFERENCE MONUMENT SET 4"X4" CONCRETE MONUMENT STAMPED PRM LB 8011
   - ◎ – DENOTES PERMANENT CONTROL POINT SET NAIL AND DISK STAMPED PCP LB 8011

2. ALL LINES INTERSECTING CURVES ARE RADIAL UNLESS OTHERWISE NOTED
   (R) – DENOTES A LINE RADIAL RELATIVE TO ADJACENT CURVE.
   (NR) – DENOTES A LINE NOT RADIAL RELATIVE TO ADJACENT CURVE.

3. DIMENSIONS SHOWN ARE IN FEET AND DECIMALS THEREOF.

4. ACCURACY:
   – THE BOUNDARY LINEAR ERROR OF CLOSURE DOES NOT EXCEED 1:10,000.
   – THE BOUNDARY ANGULAR ERROR OF CLOSURE DOES NOT EXCEED 15 SECONDS MULTIPLIED BY THE SQUARE ROOT OF THE NUMBER OF ANGLES TURNED.

5. BEARINGS SHOWN HEREON ARE ASSUMED AND BASED ON THE OCCUPIED SOUTH LINE OF THE SE 1/4 OF SECTION 14, TOWNSHIP 16 SOUTH, RANGE 32 EAST, VOLUSIA COUNTY, FLORIDA, HAVING A BEARING OF S88°57'35"W.

6. NOTE: ALL MEASUREMENTS REFER TO HORIZONTAL PLANE IN ACCORDANCE WITH THE DEFINITION OF THE U.S. SURVEY FOOT OR METER ADOPTED BY THE NATIONAL INSTITUTE OF STANDARDS AND TECHNOLOGY. ALL MEASUREMENTS SHALL USE THE 39.37/12=3.28083333333 EQUATION FOR CONVERSION FROM A U.S. FOOT TO METERS.

7. NOTICE: THIS PLAT, AS RECORDED IN ITS GRAPHIC FORM, IS THE OFFICIAL DEPICTION OF THE SUBDIVIDED LANDS DESCRIBED HEREIN AND WILL IN NO CIRCUMSTANCES BE SUPPLANTED IN AUTHORITY BY ANY OTHER GRAPHIC OR DIGITAL FORM OF THE PLAT. THERE MAY BE ADDITIONAL RESTRICTIONS THAT ARE NOT RECORDED ON THIS PLAT THAT MAY BE FOUND IN THE PUBLIC RECORDS OF THIS COUNTY.

8. THIS PLAT IS SUBJECT TO ALL EASEMENTS OF RECORD AND RESERVATIONS OF EASEMENTS, INCLUDING BUT NOT LIMITED TO DRAINAGE, UTILITY, AND ACCESS EASEMENTS DEDICATED OR GRANTED HEREON WHICH SHALL BE LOCATED AS FOLLOWS EXCEPT AS OTHERWISE NOTED ON THE PLAT:

ENTIRE STREET FRONTAGES OF LOTS AND COMMON OPEN SPACE AREAS: 12.00 FEET WIDE

9. UTILITIES INCLUDE BUT ARE NOT LIMITED TO SANITARY SEWER, POTABLE WATER, RECLAIMED WATER, STORM DRAINAGE, ELECTRIC, TELEPHONE, CABLE TELEVISION, SECURITY, NATURAL GAS, FIBER OPTIC, TELECOMMUNICATION.

10. ALL PLATTED UTILITY EASEMENTS, EXCLUSIVE OF PRIVATE EASEMENTS GRANTED TO OR OBTAINED BY A PARTICULAR ELECTRIC, TELEPHONE, GAS OR OTHER PUBLIC UTILITY, SHALL ALSO BE EASEMENTS FOR THE CONSTRUCTION, INSTALLATION, MAINTENANCE, AND OPERATION OF CABLE TELEVISION SERVICES; PROVIDED, HOWEVER, NO SUCH CONSTRUCTION, INSTALLATION, MAINTENANCE, AND OPERATION OF CABLE TELEVISION SERVICES SHALL INTERFERE WITH THE FACILITIES AND SERVICES OF AN ELECTRIC, TELEPHONE, GAS OR OTHER PUBLIC UTILITY. IN THE EVENT A CABLE TELEVISION COMPANY DAMAGES THE FACILITIES OF A PUBLIC UTILITY, IT SHALL BE SOLELY RESPONSIBLE FOR THE DAMAGES PURSUANT TO SECTION 177.091(28), FLORIDA STATUTES. SUCH CONSTRUCTION, INSTALLATION, MAINTENANCE AND OPERATION SHALL COMPLY WITH THE NATIONAL ELECTRICAL SAFETY CODE AS ADOPTED BY THE FLORIDA PUBLIC SERVICE COMMISSION.

11. ALL OTHER EASEMENTS ARE SUBORDINATE TO ANY CONSERVATION EASEMENTS DEDICATED HEREON. THERE SHALL BE NO REMOVAL OR DISTURBANCE OF ANY VEGETATION WITHIN SUCH CONSERVATION EASEMENTS. ANY PROPOSED CONSTRUCTION OR OTHER USE WITHIN A CONSERVATION EASEMENT MUST BE REVIEWED AND APPROVED BY THE CITY OF PORT ORANGE AND ANY OTHER AUTHORITY HAVING JURISDICTION OVER THE CONSERVATION EASEMENT.

12. BUILDING SETBACK REQUIREMENTS:
    FRONT = 25 FEET
    REAR = 20 FEET
    SIDE = LOTS ≤ 65' = 5 FEET
    LOTS > 65' = 7.5 FEET
    SIDE CORNER = 20 FEET

13. LOT COVERAGE REQUIREMENTS:
    MAXIMUM COMMON OPEN SPACE = 40%
    MAXIMUM BUILDING COVERAGE = 50%
    MAXIMUM BUILDING HEIGHT = 36 FEET

14. THE COMMON OPEN SPACE AREAS GRANTED TO THE HOMEOWNERS ASSOCIATION OF WESTPORT RESERVE, INC. BY THIS PLAT SHALL BE SUBJECT TO EASEMENTS AS SHOWN OR DESCRIBED HEREON OR GRANTED IN ACCORDANCE WITH THE HOMEOWNERS ASSOCIATION OF WESTPORT RESERVE, INC.'S COVENANTS AND RESTRICTIONS. THE GRANTING OF SUCH COMMON OPEN SPACE AREAS IS NOT INTENDED TO GRANT ANY RIGHT TO THE GENERAL PUBLIC.

15. THE HOMEOWNERS ASSOCIATION OF WESTPORT RESERVE, INC., A FLORIDA NON-PROFIT CORPORATION SHALL BE RESPONSIBLE FOR THE OPERATION AND MAINTENANCE OF THE DRAINAGE SYSTEM SERVING THE AREA WITHIN THE BOUNDARIES OF THIS PLAT, AS DEPICTED ON THE STORMWATER MANAGEMENT PLAN APPROVED FOR THE DEVELOPMENT BY THE CITY OF PORT ORANGE, FLORIDA. SHOULD THE ASSOCIATION FAIL TO PERFORM THE MAINTENANCE OF THE DRAINAGE AND STORMWATER MANAGEMENT SYSTEMS, THE CITY OF PORT ORANGE SHALL BE ENTITLED TO ENTER UPON THE COMMON OPEN SPACE AREAS AND DESIGNATED EASEMENT AREAS TO PERFORM MAINTENANCE, REPAIR OR REPLACE THE FACILITIES; AND, SHALL HAVE THE RIGHT TO LIEN ALL OWNERS OF RECORD IN PROPERTY FOR THE COST OF SUCH MAINTENANCE, REPAIR, AND REPLACEMENT, AS DEEMED BY THE CITY TO BE NECESSARY. IN THE EVENT OF TERMINATION, DISSOLUTION, OR FINAL LIQUIDATION OF THE ASSOCIATION, THE RESPONSIBILITY FOR THE OPERATION AND MAINTENANCE OF THE SURFACE WATER OR STORM WATER MANAGEMENT SYSTEM WILL BE TRANSFERRED TO AND ACCEPTED BY AN ENTITY WHICH COMPLIES WITH SECTION 40C-42.027, F.A.C. AND BE APPROVED BY THE SAINT JOHNS RIVER WATER MANAGEMENT DISTRICT PRIOR TO SUCH TERMINATION, DISSOLUTION, OR LIQUIDATION.

16. RETENTION AREAS AND COMMON OPEN SPACE AREAS ARE GRANTED AS EASEMENTS TO THE CITY OF PORT ORANGE WITH RIGHTS OF ACCESS, INGRESS, AND EGRESS, TOGETHER WITH THE RIGHT TO HARVEST EXCESS STORM WATER / GROUND WATER AS DEEMED APPROPRIATE IN THE DISCRETION OF THE CITY.

17. THE HOMEOWNERS ASSOCIATION OF WESTPORT RESERVE, INC. SHALL BE RESPONSIBLE FOR MAINTAINING ALL LANDSCAPING AND IRRIGATION IN COMMON OPEN SPACE AREAS.

18. THE ARTICLES OF INCORPORATION FOR THE HOMEOWNERS ASSOCIATION OF WESTPORT RESERVE, INC. ARE RECORDED IN OFFICIAL RECORDS BOOK ____, PAGES ____ THROUGH ____ OF THE PUBLIC RECORDS OF VOLUSIA COUNTY, FLORIDA.

19. THIS PLAT IS SUBJECT TO THE DECLARATION OF COVENANTS AND RESTRICTIONS FOR THE HOMEOWNERS ASSOCIATION OF WESTPORT RESERVE, INC. ARE RECORDED IN OFFICIAL RECORDS BOOK ____, PAGES ____ THROUGH ____, OF THE PUBLIC RECORDS OF VOLUSIA COUNTY, FLORIDA.

20. THIS PLAT SUBJECT TO THE EASEMENT AND COST SHARING AGREEMENT AS RECORDED IN OFFICIAL RECORDS BOOK ____, PAGES ____ THROUGH ____, OF THE PUBLIC RECORDS OF VOLUSIA COUNTY, FLORIDA.

21. THE ENTRY AND SIGNAGE EASEMENT SHOWN HEREON WITHIN TRACT "H" IS HEREBY GRANTED TO THE HOMEOWNERS ASSOCIATION OF WESTPORT RESERVE, INC.

LEGAL DESCRIPTION:

A PORTION OF SECTIONS 13 AND 14, TOWNSHIP 16 SOUTH, RANGE 32 EAST, VOLUSIA COUNTY, FLORIDA, BEING MORE PARTICULARLY DESCRIBED AS FOLLOWS:

BEGIN AT THE OCCUPIED SOUTHWEST CORNER OF THE SOUTHWEST 1/4 OF SAID SECTION 13; THENCE RUN S01°05'50"E A DISTANCE OF 190.22 FEET TO THE SOUTHEAST CORNER OF SAID SECTION 14; THENCE RUN S88°57'35"W ALONG THE EASTERLY EXTENSION OF THE OCCUPIED NORTHERLY LINE OF TOMOKA FARMS, AS RECORDED IN MAP BOOK 6, PAGE 192, AND RE-RECORDED IN MAP BOOK 22, PAGES 168 AND 169, PUBLIC RECORDS OF VOLUSIA COUNTY, FLORIDA, A DISTANCE OF 2596.98 FEET TO THE EASTERLY RIGHT-OF-WAY LINE OF TOMOKA FARMS ROAD, PER ROAD BOOK 1, PAGE 28, PUBLIC RECORDS OF VOLUSIA COUNTY, FLORIDA; THENCE RUN THE FOLLOWING THREE COURSES ALONG SAID EASTERLY RIGHT-OF-WAY LINE: N16°08'29"W A DISTANCE OF 833.38 FEET; N10°03'47"W A DISTANCE OF 222.54 FEET; N06°47'13"W A DISTANCE OF 201.00 FEET; THENCE LEAVING SAID EASTERLY RIGHT-OF-WAY LINE RUN N87°42'50"E A DISTANCE OF 252.99 FEET; THENCE N27°43'56"W A DISTANCE OF 32.45 FEET; THENCE N31°24'40"W A DISTANCE OF 89.27 FEET; THENCE N32°35'34"W A DISTANCE OF 78.98 FEET; THENCE N07°21'34"W A DISTANCE OF 60.82 FEET; THENCE N00°19'32"W A DISTANCE OF 59.57 FEET; THENCE N61°15'13"E A DISTANCE OF 126.00 FEET; THENCE N65°48'17"E A DISTANCE OF 65.09 FEET; THENCE N20°03'24"E A DISTANCE OF 111.70 FEET; THENCE N84°27'18"E A DISTANCE OF 417.64 FEET TO A POINT OF CURVATURE OF A CURVE CONCAVE SOUTHEASTERLY, HAVING A RADIUS OF 2065.94 FEET, A CENTRAL ANGLE OF 05°52'38", A CHORD BEARING OF N87°23'37"E, A CHORD DISTANCE OF 211.82 FEET; THENCE RUN NORTHEASTERLY ALONG THE ARC OF SAID CURVE A DISTANCE OF 211.92 FEET; THENCE S89°40'04"E A DISTANCE OF 2504.37 FEET; THENCE S00°19'55"W A DISTANCE OF 40.25 FEET TO A POINT OF CURVATURE OF A CURVE CONCAVE NORTHEASTERLY, HAVING A RADIUS OF 1250.00 FEET, A CENTRAL ANGLE OF 57°05'19", A CHORD BEARING OF S28°12'44"E, A CHORD DISTANCE OF 1194.59 FEET; THENCE RUN SOUTHEASTERLY ALONG THE ARC OF SAID CURVE, A DISTANCE OF 1245.48 FEET TO A POINT OF REVERSE CURVATURE OF A CURVE CONCAVE SOUTHWESTERLY, HAVING A RADIUS OF 483.51 FEET, A CENTRAL ANGLE OF 56°47'27", A CHORD BEARING OF S28°21'40"E, A CHORD DISTANCE OF 459.87 FEET; THENCE RUN SOUTHEASTERLY ALONG THE ARC OF SAID CURVE A DISTANCE OF 479.25 FEET TO THE OCCUPIED SOUTH LINE OF SAID SOUTHWEST 1/4 OF SECTION 13; THENCE S89°26'31"W ALONG SAID OCCUPIED SOUTH LINE OF THE SOUTHWEST 1/4, A DISTANCE OF 1376.04 FEET TO THE POINT OF BEGINNING.

TOGETHER WITH:

A PORTION OF SECTION 13, TOWNSHIP 16 SOUTH, RANGE 32 EAST, VOLUSIA COUNTY, FLORIDA, BEING MORE PARTICULARLY DESCRIBED AS FOLLOWS:

COMMENCE AT THE OCCUPIED SOUTHWEST CORNER OF THE SOUTHWEST 1/4 OF SAID SECTION 13; THENCE RUN N89°26'31"E ALONG THE OCCUPIED SOUTH LINE OF SAID SOUTHWEST 1/4 OF SECTION 13, A DISTANCE OF 1476.04 FEET TO A NON-TANGENT POINT ON A CURVE CONCAVE SOUTHWESTERLY, HAVING A RADIUS OF 583.51 FEET, A CENTRAL ANGLE OF 56°41'21", A CHORD BEARING OF N28°24'43"W, A CHORD DISTANCE OF 554.07 FEET FOR A POINT OF BEGINNING; THENCE RUN NORTHWESTERLY ALONG THE ARC OF SAID CURVE A DISTANCE OF 577.33 FEET TO A POINT OF REVERSE CURVATURE OF A CURVE CONCAVE NORTHEASTERLY, HAVING A RADIUS OF 1150.00 FEET, A CENTRAL ANGLE OF 57°05'19", A CHORD BEARING OF N28°12'44"W, A CHORD DISTANCE OF 1099.03 FEET; THENCE RUN NORTHWESTERLY ALONG THE ARC OF SAID CURVE A DISTANCE OF 1145.84 FEET TO THE POINT OF TANGENCY; THENCE N00°19'55"E A DISTANCE OF 40.25 FEET; THENCE S89°40'04"E A DISTANCE OF 50.47 FEET TO A POINT ON THE EASTERLY LINE OF THE 30 FOOT FLORIDA GAS TRANSMISSION COMPANY RIGHT-OF-WAY EASEMENT RECORDED IN OFFICIAL RECORDS BOOK 669, PAGE 1, PUBLIC RECORDS OF VOLUSIA COUNTY, FLORIDA; THENCE S35°50'40"E ALONG SAID EASTERLY LINE, A DISTANCE OF 1644.32 FEET; THENCE S28°31'44"E ALONG SAID EASTERLY LINE, A DISTANCE OF 181.84 FEET TO THE OCCUPIED SOUTH LINE OF THE AFORESAID SOUTHWEST 1/4 OF SECTION 13; THENCE S89°26'31"W ALONG SAID OCCUPIED SOUTH LINE OF THE SOUTHWEST 1/4, A DISTANCE OF 317.26 FEET TO THE POINT OF BEGINNING.

CONTAINING: 148.747 ACRES, MORE OR LESS.

PLANNING COMMISSION CERTIFICATE OF APPROVAL

THIS STATEMENT HEREBY CERTIFIES THAT THE PLAT ENTITLED WESTPORT RESERVE WAS APPROVED BY THE PORT ORANGE PLANNING COMMISSION ON _____, 2016.

CHAIRMAN OF THE PORT ORANGE PLANNING COMMISSION — DATE

REVIEW BY SURVEYOR AND MAPPER FOR THE CITY

I HEREBY CERTIFY TO THE CITY, THAT I HAVE REVIEWED THE FOREGOING PLAT FOR COMPLIANCE WITH THE REQUIREMENTS OF CHAPTER 177, FLORIDA STATUTES, AND THAT I HAVE PROVIDED BOTH THE CITY AND THE SURVEYOR AND MAPPER OF RECORD A LIST OF DEVIATIONS, IF ANY, FROM SUCH REQUIREMENTS.

SIGNATURE — DATE

PRINTED NAME: _____ P.L.S. NO.

WESTPORT RESERVE DEDICATION

KNOW ALL MEN BY THESE PRESENTS, THAT EDGE COVE, LLC, BEING THE OWNER IN FEE SIMPLE OF THE LANDS SHOWN AND DESCRIBED HEREON AS THE PLAT ENTITLED WESTPORT RESERVE LOCATED IN THE CITY OF PORT ORANGE, VOLUSIA COUNTY, FLORIDA, HEREBY DEDICATES THE SAID LANDS AND PLAT FOR THE USES AND PURPOSES HEREON EXPRESSED. ALL STREETS, ROADS, ALLEYS, SIDEWALKS, BIKE PATHS, AND OTHER RIGHTS-OF-WAY (INCLUDING TRACT "O" AND TRACT "P") SHOWN OR DESCRIBED ON THE PLAT ARE, UNLESS OTHERWISE INDICATED, DEDICATED TO THE CITY OF PORT ORANGE. ALL POTABLE WATER, RECLAIMED WATER, AND SANITARY SEWER LINES CONSTRUCTED WITH THE AREA ENCOMPASSED WITHIN THE PLAT ARE DEDICATED TO THE CITY OF PORT ORANGE. ALL DRAINAGE, MAINTENANCE, ACCESS, UTILITY, AND VEHICULAR ACCESS CONTROL EASEMENTS SHOWN OR DESCRIBED ON THE PLAT ARE, UNLESS OTHERWISE INDICATED, GRANTED TO THE CITY OF PORT ORANGE. ALL DRAINAGE, MAINTENANCE, AND ACCESS EASEMENTS SHOWN OR DESCRIBED ON THE PLAT ARE ALSO, UNLESS OTHERWISE INDICATED, GRANTED TO THE HOMEOWNERS ASSOCIATION OF WESTPORT RESERVE, INC. FOR THE PURPOSES DESCRIBED IN THE GENERAL NOTES.

ALL PARCELS AND OTHER AREAS SHOWN OR DEPICTED HEREON AS COMMON OPEN SPACE AREAS ARE HEREBY GRANTED TO THE HOMEOWNERS ASSOCIATION OF WESTPORT RESERVE, INC. FOR THE PURPOSES DEPICTED ON THE SUBDIVISION PLANS APPROVED BY THE CITY OF PORT ORANGE, FLORIDA.

TRACTS "A", "B", "C", AND "D" DEPICTED HEREON AS COMMON OPEN SPACE AREAS WILL BE OWNED AND MAINTAINED BY THE HOMEOWNERS ASSOCIATION OF WESTPORT RESERVE, INC. ITS SUCCESSORS AND/OR ASSIGNS FOR THE PURPOSE OF COMMON OPEN SPACE.

TRACTS "E" AND "N" WILL BE OWNED AND MAINTAINED BY THE HOMEOWNERS ASSOCIATION OF WESTPORT RESERVE, INC., ITS SUCCESSORS AND/OR ASSIGNS FOR THE PURPOSE OF COMMON OPEN SPACE AND STORMWATER DRAINAGE. A DRAINAGE EASEMENT OVER TRACTS "E" AND "N" IS HEREBY GRANTED TO THE CITY OF PORT ORANGE.

TRACT "F" WILL BE OWNED AND MAINTAINED BY THE HOMEOWNERS ASSOCIATION OF WESTPORT RESERVE, INC., ITS SUCCESSORS AND/OR ASSIGNS FOR THE PURPOSE OF COMMON OPEN SPACE AND IS SUBJECT TO THE CONSERVATION EASEMENT GRANTED TO THE CITY OF PORT ORANGE, FLORIDA AS RECORDED IN OFFICIAL RECORDS BOOK 5565, PAGE 3008 OF THE PUBLIC RECORDS OF VOLUSIA COUNTY, FLORIDA.

TRACTS "G" (FUTURE DEVELOPMENT), "H" (FUTURE DEVELOPMENT), "I" (COMMON OPEN SPACE), "J" (COMMON OPEN SPACE), "K" (STORMWATER DRAINAGE), "L" (FUTURE DEVELOPMENT), "M" (COMMON OPEN SPACE) AND "Q" (TREE PRESERVATION) ARE OWNED BY AND SHALL BE MAINTAINED BY EDGE COVE, LLC., ITS SUCCESSORS AND/OR ASSIGNS.

IN WITNESS WHEREOF, THE OWNER HAS CAUSED THESE PRESENTS TO BE SIGNED AND ATTESTED TO BY THE OFFICER NAMED BELOW AND ITS CORPORATE SEAL TO BE AFFIXED HERETO ON _____, A.D. 2016.

EDGE COVE, LLC
BY: EMERSON INTERNATIONAL, INC.

BY: _____

NAME: _____

TITLE: _____

SEAL

SIGNED, SEALED AND DELIVERED IN THE PRESENCE OF:

WITNESS: _____ SIGNATURE _____ PRINTED NAME

WITNESS: _____ SIGNATURE _____ PRINTED NAME

STATE OF FLORIDA, COUNTY OF SEMINOLE
THE FOREGOING INSTRUMENT WAS ACKNOWLEDGED BEFORE ME THIS ____ DAY OF _____, 2016 BY _____, AS _____ FOR EMERSON INTERNATIONAL, HE IS PERSONALLY KNOWN TO ME OR WHO HAS PRODUCED _____ AS IDENTIFICATION.

SIGNATURE OF NOTARY PUBLIC — PRINTED, TYPED OR STAMPED NOTARY NAME
NOTARY PUBLIC, STATE OF _____ (NOTARY SEAL)
COMMISSION NO.: _____ EXPIRATION: _____

CITY COUNCIL CERTIFICATE OF APPROVAL

THIS STATEMENT HEREBY CERTIFIES THAT THE PLAT ENTITLED WESTPORT RESERVE WAS APPROVED BY THE PORT ORANGE CITY COUNCIL ON _____, 2016.

MAYOR OF THE CITY OF PORT ORANGE — DATE

ATTEST: _____
CITY CLERK OF THE CITY OF PORT ORANGE

CERTIFICATE OF SURVEYOR AND MAPPER

KNOW ALL MEN BY THESE PRESENTS, THAT THE UNDERSIGNED BEING A LICENSED AND REGISTERED SURVEYOR AND MAPPER, DOES HEREBY CERTIFY THAT THE PLAT SHOWN AND DESCRIBED HEREON, ENTITLED WESTPORT RESERVE, WAS PREPARED UNDER MY DIRECTION AND SUPERVISION, THAT THE PLAT COMPLIES WITH ALL OF THE SURVEY REQUIREMENTS OF CHAPTER 177, FLORIDA STATUTES, AND THAT ALL MONUMENTATION SHOWN HEREON AS REQUIRED PER CHAPTER 177, FLORIDA STATUTES, HAS BEEN PROPERLY PLACED.

WILLIAM D. DONLEY, (PSM) — 07/01/16 DATE
PROFESSIONAL SURVEYOR AND MAPPER, NO. 5381
DEWBERRY ENGINEERS, INC.
131 WEST KALEY STREET,
ORLANDO, FLORIDA 32806
CERTIFICATE OF AUTHORIZATION NO. (LB) LICENSED BUSINESS 8011
(SEAL)

CERTIFICATE OF CLERK

I HEREBY CERTIFY, THAT I HAVE EXAMINED THE FOREGOING PLAT AND FIND THAT IT COMPLIES IN FORM WITH ALL REQUIREMENTS STATED IN CHAPTER 177, FLORIDA STATUTES, AND THAT IT WAS FILED FOR RECORD ON _____, 2016 AT _____ A.M. / P.M., FILE NO. _____.

BY: _____
CLERK OF THE CIRCUIT COURT IN AND FOR VOLUSIA COUNTY, FLORIDA

Dewberry
131 West Kaley Street
Orlando, Florida 32806
Phone: 321.354.9826 Fax: 407.648.9104
www.dewberry.com
Certificate Of Authorization No. LB 8011

WESTPORT RESERVE

LYING IN SECTIONS 13 AND 14, TOWNSHIP 16 SOUTH, RANGE 32 EAST,
CITY OF PORT ORANGE, VOLUSIA COUNTY, FLORIDA

MAP BOOK: PAGE:

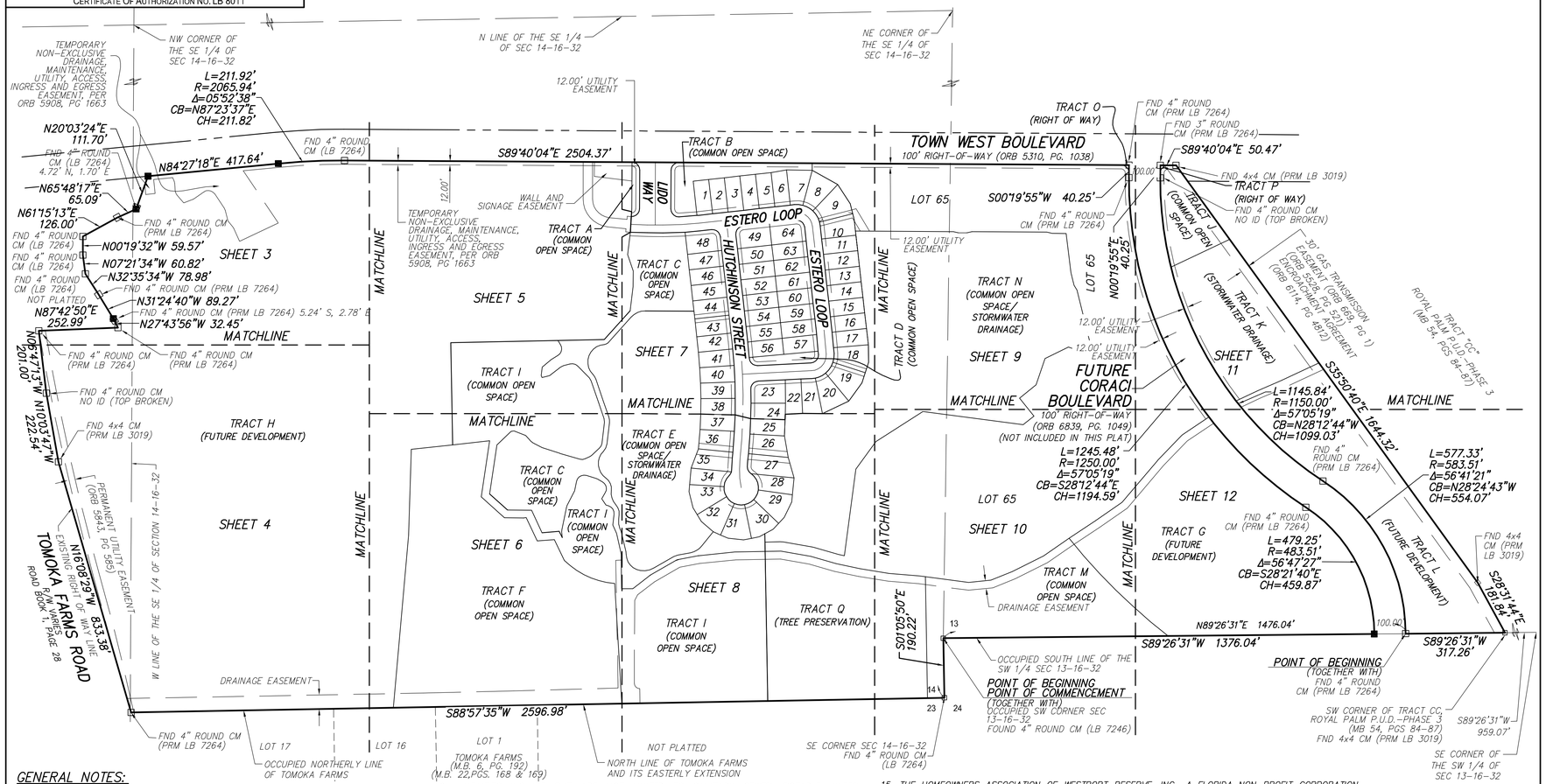

GENERAL NOTES:

1. MONUMENTATION:
   - ⊡ – DENOTES PERMANENT REFERENCE MONUMENT FOUND STAMPED AS NOTED
   - ■ – DENOTES PERMANENT REFERENCE MONUMENT SET 4"X4" CONCRETE MONUMENT STAMPED PRM LB 8011
   - ◎ – DENOTES PERMANENT CONTROL POINT SET NAIL AND DISK STAMPED PCP LB 8011

2. ALL LINES INTERSECTING CURVES ARE RADIAL UNLESS OTHERWISE NOTED
   (R) – DENOTES A LINE RADIAL RELATIVE TO ADJACENT CURVE.
   (NR) – DENOTES A LINE NOT RADIAL RELATIVE TO ADJACENT CURVE.

3. DIMENSIONS SHOWN ARE IN FEET AND DECIMALS THEREOF.

4. ACCURACY:
   - THE BOUNDARY LINEAR ERROR OF CLOSURE DOES NOT EXCEED 1:10,000.
   - THE BOUNDARY ANGULAR ERROR OF CLOSURE DOES NOT EXCEED 15 SECONDS MULTIPLIED BY THE SQUARE ROOT OF THE NUMBER OF ANGLES TURNED.

5. BEARINGS SHOWN HEREON ARE ASSUMED AND BASED ON THE OCCUPIED SOUTH LINE OF THE SE 1/4 OF SECTION 14, TOWNSHIP 16 SOUTH, RANGE 32 EAST, VOLUSIA COUNTY, FLORIDA, HAVING A BEARING OF S88°57'35"W.

6. NOTE: ALL MEASUREMENTS REFER TO HORIZONTAL PLANE IN ACCORDANCE WITH THE DEFINITION OF THE U.S. SURVEY FOOT OR METER ADOPTED BY THE NATIONAL INSTITUTE OF STANDARDS AND TECHNOLOGY. ALL MEASUREMENTS SHALL USE THE 39.37/12=3.280833333333 EQUATION FOR CONVERSION FROM A U.S. FOOT TO METERS.

7. NOTICE: THIS PLAT, AS RECORDED IN ITS GRAPHIC FORM, IS THE OFFICIAL DEPICTION OF THE SUBDIVIDED LANDS DESCRIBED HEREIN AND WILL IN NO CIRCUMSTANCES BE SUPPLANTED IN AUTHORITY BY ANY OTHER GRAPHIC OR DIGITAL FORM OF THE PLAT. THERE MAY BE ADDITIONAL RESTRICTIONS THAT ARE NOT RECORDED ON THIS PLAT THAT MAY BE FOUND IN THE PUBLIC RECORDS OF THIS COUNTY.

8. THIS PLAT IS SUBJECT TO ALL EASEMENTS OF RECORD AND RESERVATIONS OF EASEMENTS, INCLUDING BUT NOT LIMITED TO DRAINAGE, UTILITY, AND ACCESS EASEMENTS DEDICATED OR GRANTED HEREON WHICH SHALL BE LOCATED AS FOLLOWS EXCEPT AS OTHERWISE NOTED ON THE PLAT:

ENTIRE STREET FRONTAGES OF LOTS AND COMMON OPEN SPACE AREAS: 12.00 FEET WIDE

9. UTILITIES INCLUDE BUT ARE NOT LIMITED TO SANITARY SEWER, POTABLE WATER, RECLAIMED WATER, STORM DRAINAGE, ELECTRIC, TELEPHONE, CABLE TELEVISION, SECURITY, NATURAL GAS, FIBER OPTIC, TELECOMMUNICATION.

10. ALL PLATTED UTILITY EASEMENTS, EXCLUSIVE OF PRIVATE EASEMENTS GRANTED TO OR OBTAINED BY A PARTICULAR ELECTRIC, TELEPHONE, GAS OR OTHER PUBLIC UTILITY, SHALL ALSO BE EASEMENTS FOR THE CONSTRUCTION, INSTALLATION, MAINTENANCE, AND OPERATION OF CABLE TELEVISION SERVICES; PROVIDED, HOWEVER, NO SUCH CONSTRUCTION, INSTALLATION, MAINTENANCE, AND OPERATION OF CABLE TELEVISION SERVICES SHALL INTERFERE WITH THE FACILITIES AND SERVICES OF AN ELECTRIC, TELEPHONE, GAS OR OTHER PUBLIC UTILITY. IN THE EVENT A CABLE TELEVISION COMPANY DAMAGES THE FACILITIES OF A PUBLIC UTILITY, IT SHALL BE SOLELY RESPONSIBLE FOR THE DAMAGES PURSUANT TO SECTION 177.091(28), FLORIDA STATUTES. SUCH CONSTRUCTION, INSTALLATION, MAINTENANCE AND OPERATION SHALL COMPLY WITH THE NATIONAL ELECTRICAL SAFETY CODE AS ADOPTED BY THE FLORIDA PUBLIC SERVICE COMMISSION.

11. ALL OTHER EASEMENTS ARE SUBORDINATE TO ANY CONSERVATION EASEMENTS DEDICATED HEREON. THERE SHALL BE NO REMOVAL OR DISTURBANCE OF ANY VEGETATION WITHIN SUCH CONSERVATION EASEMENTS. ANY PROPOSED CONSTRUCTION OR OTHER USE WITHIN A CONSERVATION EASEMENT MUST BE REVIEWED AND APPROVED BY THE CITY OF PORT ORANGE AND ANY OTHER AUTHORITY HAVING JURISDICTION OVER THE CONSERVATION EASEMENT.

12. BUILDING SETBACK REQUIREMENTS:
    FRONT = 25 FEET
    REAR = 20 FEET
    SIDE = LOTS ≤ 65' = 5 FEET
    LOTS > 65' = 7.5 FEET
    SIDE CORNER = 20 FEET

13. LOT COVERAGE REQUIREMENTS:
    MAXIMUM COMMON OPEN SPACE = 40%
    MAXIMUM BUILDING COVERAGE = 50%
    MAXIMUM BUILDING HEIGHT = 36 FEET

14. THE COMMON OPEN SPACE AREAS GRANTED TO THE HOMEOWNERS ASSOCIATION OF WESTPORT RESERVE, INC. BY THIS PLAT SHALL BE SUBJECT TO EASEMENTS AS SHOWN OR DESCRIBED HEREON OR GRANTED IN ACCORDANCE WITH THE HOMEOWNERS ASSOCIATION OF WESTPORT RESERVE, INC.'S COVENANTS AND RESTRICTIONS. THE GRANTING OF SUCH COMMON OPEN SPACE AREAS IS NOT INTENDED TO GRANT ANY RIGHT TO THE GENERAL PUBLIC.

15. THE HOMEOWNERS ASSOCIATION OF WESTPORT RESERVE, INC., A FLORIDA NON-PROFIT CORPORATION SHALL BE RESPONSIBLE FOR THE OPERATION AND MAINTENANCE OF THE DRAINAGE SYSTEM SERVING THE AREA WITHIN THE BOUNDARIES OF THIS PLAT, AS DEPICTED ON THE STORMWATER MANAGEMENT PLAN APPROVED FOR THE DEVELOPMENT BY THE CITY OF PORT ORANGE, FLORIDA. SHOULD THE ASSOCIATION FAIL TO PERFORM THE MAINTENANCE OF THE DRAINAGE AND STORMWATER MANAGEMENT SYSTEMS, THE CITY OF PORT ORANGE SHALL BE ENTITLED TO ENTER UPON THE COMMON OPEN SPACE AREAS AND DESIGNATED EASEMENT AREAS TO PERFORM MAINTENANCE, REPAIR OR REPLACE THE FACILITIES; AND, SHALL HAVE THE RIGHT TO LIEN ALL OWNERS OF RECORD IN PROPERTY FOR THE COST OF SUCH MAINTENANCE, REPAIR, AND REPLACEMENT, AS DEEMED BY THE CITY TO BE NECESSARY. IN THE EVENT OF TERMINATION, DISSOLUTION, OR FINAL LIQUIDATION OF THE ASSOCIATION, THE RESPONSIBILITY FOR THE OPERATION AND MAINTENANCE OF THE SURFACE WATER OR STORM WATER MANAGEMENT SYSTEM WILL BE TRANSFERRED TO AND ACCEPTED BY AN ENTITY WHICH COMPLIES WITH SECTION 40C-42.027, F.A.C. AND BE APPROVED BY THE SAINT JOHNS RIVER WATER MANAGEMENT DISTRICT PRIOR TO SUCH TERMINATION, DISSOLUTION, OR LIQUIDATION.

16. RETENTION AREAS AND COMMON OPEN SPACE AREAS ARE GRANTED AS EASEMENTS TO THE CITY OF PORT ORANGE WITH RIGHTS OF ACCESS, INGRESS, AND EGRESS, TOGETHER WITH THE RIGHT TO HARVEST EXCESS STORM WATER / GROUND WATER AS DEEMED APPROPRIATE IN THE DISCRETION OF THE CITY.

17. THE HOMEOWNERS ASSOCIATION OF WESTPORT RESERVE, INC. SHALL BE RESPONSIBLE FOR MAINTAINING ALL LANDSCAPING AND IRRIGATION IN COMMON OPEN SPACE AREAS.

18. THE ARTICLES OF INCORPORATION FOR THE HOMEOWNERS ASSOCIATION OF WESTPORT RESERVE, INC. ARE RECORDED IN OFFICIAL RECORDS BOOK _____, PAGES _____ THROUGH _____ OF THE PUBLIC RECORDS OF VOLUSIA COUNTY, FLORIDA.

19. THIS PLAT IS SUBJECT TO THE DECLARATION OF COVENANTS AND RESTRICTIONS FOR THE HOMEOWNERS ASSOCIATION OF WESTPORT RESERVE, INC. ARE RECORDED IN OFFICIAL RECORDS BOOK _____, PAGES _____ THROUGH _____, OF THE PUBLIC RECORDS OF VOLUSIA COUNTY, FLORIDA.

20. THIS PLAT SUBJECT TO THE EASEMENT AND COST SHARING AGREEMENT AS RECORDED IN OFFICIAL RECORDS BOOK _____, PAGES _____ THROUGH _____, OF THE PUBLIC RECORDS OF VOLUSIA COUNTY, FLORIDA.

21. THE ENTRY AND SIGNAGE EASEMENT SHOWN HEREON WITHIN TRACT "H" IS HEREBY GRANTED TO THE HOMEOWNERS ASSOCIATION OF WESTPORT RESERVE, INC.

0 100 200 400

1 INCH = 200 FEET

SHEET INDEX

SHEET 1 – COVER SHEET, NOTES, LEGEND/ABBREVIATIONS
SHEET 2 – KEY MAP
SHEETS 3 TO 12 – DETAIL SHEETS

WESTPORT RESERVE

LYING IN SECTIONS 13 AND 14, TOWNSHIP 16 SOUTH, RANGE 32 EAST,
CITY OF PORT ORANGE, VOLUSIA COUNTY, FLORIDA

MAP BOOK: PAGE:

0 30 60 120

1 INCH = 60 FEET

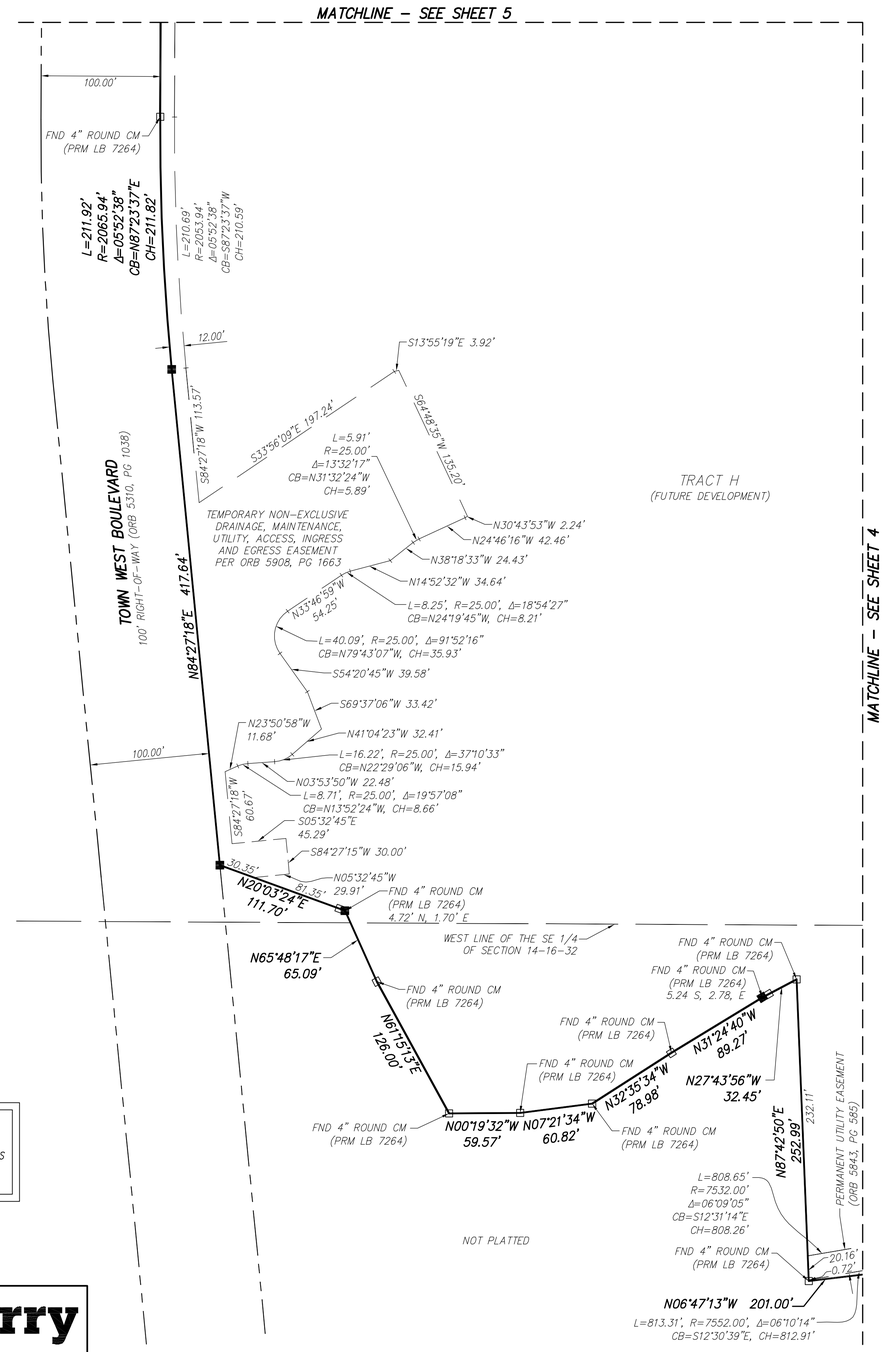

SHEET INDEX

SHEET 1 – COVER SHEET, NOTES, LEGEND/ABBREVATIONS
SHEET 2 – KEY MAP
SHEETS 3 TO 12 – DETAIL SHEETS

GENERAL NOTES:

1. MONUMENTATION:
   - ⊡ – DENOTES PERMANENT REFERENCE MONUMENT FOUND STAMPED AS NOTED
   - ■ – DENOTES PERMANENT REFERENCE MONUMENT SET 4"X4" CONCRETE MONUMENT STAMPED PRM LB 8011
   - ◎ – DENOTES PERMANENT CONTROL POINT SET NAIL AND DISK STAMPED PCP LB 8011

2. ALL LINES INTERSECTING CURVES ARE RADIAL UNLESS OTHERWISE NOTED
   (R) – DENOTES A LINE RADIAL RELATIVE TO ADJACENT CURVE.
   (NR) – DENOTES A LINE NOT RADIAL RELATIVE TO ADJACENT CURVE.

3. DIMENSIONS SHOWN ARE IN FEET AND DECIMALS THEREOF.

4. ACCURACY:
   - THE BOUNDARY LINEAR ERROR OF CLOSURE DOES NOT EXCEED 1:10,000.
   - THE BOUNDARY ANGULAR ERROR OF CLOSURE DOES NOT EXCEED 15 SECONDS MULTIPLIED BY THE SQUARE ROOT OF THE NUMBER OF ANGLES TURNED.

5. BEARINGS SHOWN HEREON ARE ASSUMED AND BASED ON THE OCCUPIED SOUTH LINE OF THE SE 1/4 OF SECTION 14, TOWNSHIP 16 SOUTH, RANGE 32 EAST, VOLUSIA COUNTY, FLORIDA, HAVING A BEARING OF S88°57'35"W.

6. NOTE: ALL MEASUREMENTS REFER TO HORIZONTAL PLANE IN ACCORDANCE WITH THE DEFINITION OF THE U.S. SURVEY FOOT OR METER ADOPTED BY THE NATIONAL INSTITUTE OF STANDARDS AND TECHNOLOGY. ALL MEASUREMENTS SHALL USE THE 39.37/12=3.280833333333 EQUATION FOR CONVERSION FROM A U.S. FOOT TO METERS.

7. NOTICE: THIS PLAT, AS RECORDED IN ITS GRAPHIC FORM, IS THE OFFICIAL DEPICTION OF THE SUBDIVIDED LANDS DESCRIBED HEREIN AND WILL IN NO CIRCUMSTANCES BE SUPPLANTED IN AUTHORITY BY ANY OTHER GRAPHIC OR DIGITAL FORM OF THE PLAT. THERE MAY BE ADDITIONAL RESTRICTIONS THAT ARE NOT RECORDED ON THIS PLAT THAT MAY BE FOUND IN THE PUBLIC RECORDS OF THIS COUNTY.

8. THIS PLAT IS SUBJECT TO ALL EASEMENTS OF RECORD AND RESERVATIONS OF EASEMENTS, INCLUDING BUT NOT LIMITED TO DRAINAGE, UTILITY, AND ACCESS EASEMENTS DEDICATED OR GRANTED HEREON WHICH SHALL BE LOCATED AS FOLLOWS EXCEPT AS OTHERWISE NOTED ON THE PLAT:

ENTIRE STREET FRONTAGES OF LOTS AND COMMON OPEN SPACE AREAS: 12.00 FEET WIDE

9. UTILITIES INCLUDE BUT ARE NOT LIMITED TO SANITARY SEWER, POTABLE WATER, RECLAIMED WATER, STORM DRAINAGE, ELECTRIC, TELEPHONE, CABLE TELEVISION, SECURITY, NATURAL GAS, FIBER OPTIC, TELECOMMUNICATION.

10. ALL PLATTED UTILITY EASEMENTS, EXCLUSIVE OF PRIVATE EASEMENTS GRANTED TO OR OBTAINED BY A PARTICULAR ELECTRIC, TELEPHONE, GAS OR OTHER PUBLIC UTILITY, SHALL ALSO BE EASEMENTS FOR THE CONSTRUCTION, INSTALLATION, MAINTENANCE, AND OPERATION OF CABLE TELEVSION SERVICES; PROVIDED, HOWEVER, NO SUCH CONSTRUCTION, INSTALLATION, MAINTENANCE, AND OPERATION OF CABLE TELEVISION SERVICES SHALL INTERFERE WITH THE FACILITIES AND SERVICES OF AN ELECTRIC, TELEPHONE, GAS OR OTHER PUBLIC UTILITY. IN THE EVENT A CABLE TELEVSION COMPANY DAMAGES THE FACILITIES OF A PUBLIC UTILITY, IT SHALL BE SOLELY RESPONSIBLE FOR THE DAMAGES PURSUANT TO SECTION 177.091(28), FLORIDA STATUTES. SUCH CONSTRUCTION, INSTALLATION, MAINTENANCE AND OPERATION SHALL COMPLY WITH THE NATIONAL ELECTRICAL SAFETY CODE AS ADOPTED BY THE FLORIDA PUBLIC SERVICE COMMISSION.

11. ALL OTHER EASEMENTS ARE SUBORDINATE TO ANY CONSERVATION EASEMENTS DEDICATED HEREON. THERE SHALL BE NO REMOVAL OR DISTURBANCE OF ANY VEGETATION WITHIN SUCH CONSERVATION EASEMENTS. ANY PROPOSED CONSTRUCTION OR OTHER USE WITHIN A CONSERVATION EASEMENT MUST BE REVIEWED AND APPROVED BY THE CITY OF PORT ORANGE AND ANY OTHER AUTHORITY HAVING JURISDICTION OVER THE CONSERVATION EASEMENT.

12. BUILDING SETBACK REQUIREMENTS:
    FRONT = 25 FEET
    REAR = 20 FEET
    SIDE = LOTS ≤ 65' = 5 FEET
    LOTS > 65' = 7.5 FEET
    SIDE CORNER = 20 FEET

13. LOT COVERAGE REQUIREMENTS:
    MAXIMUM COMMON OPEN SPACE = 40%
    MAXIMUM BUILDING COVERAGE = 50%
    MAXIMUM BUILDING HEIGHT = 36 FEET

14. THE COMMON OPEN SPACE AREAS GRANTED TO THE HOMEOWNERS ASSOCIATION OF WESTPORT RESERVE, INC. BY THIS PLAT SHALL BE SUBJECT TO EASEMENTS AS SHOWN OR DESCRIBED HEREON OR GRANTED IN ACCORDANCE WITH THE HOMEOWNERS ASSOCIATION OF WESTPORT RESERVE, INC.'S COVENANTS AND RESTRICTIONS. THE GRANTING OF SUCH COMMON OPEN SPACE AREAS IS NOT INTENDED TO GRANT ANY RIGHT TO THE GENERAL PUBLIC.

15. THE HOMEOWNERS ASSOCIATION OF WESTPORT RESERVE, INC., A FLORIDA NON-PROFIT CORPORATION SHALL BE RESPONSIBLE FOR THE OPERATION AND MAINTENANCE OF THE DRAINAGE SYSTEM SERVING THE AREA WITHIN THE BOUNDARIES OF THIS PLAT, AS DEPICTED ON THE STORMWATER MANAGEMENT PLAN APPROVED FOR THE DEVELOPMENT BY THE CITY OF PORT ORANGE, FLORIDA. SHOULD THE ASSOCIATION FAIL TO PERFORM THE MAINTENANCE OF THE DRAINAGE AND STORMWATER MANAGEMENT SYSTEMS, THE CITY OF PORT ORANGE SHALL BE ENTITLED TO ENTER UPON THE COMMON OPEN SPACE AREAS AND DESIGNATED EASEMENT AREAS TO PERFORM MAINTENANCE, REPAIR OR REPLACE THE FACILITIES; AND, SHALL HAVE THE RIGHT TO LIEN ALL OWNERS OF RECORD IN PROPERTY FOR THE COST OF SUCH MAINTENANCE, REPAIR, AND REPLACEMENT, AS DEEMED BY THE CITY TO BE NECESSARY. IN THE EVENT OF TERMINATION, DISSOLUTION, OR FINAL LIQUIDATION OF THE ASSOCIATION, THE RESPONSIBILITY FOR THE OPERATION AND MAINTENANCE OF THE SURFACE WATER OR STORM WATER MANAGEMENT SYSTEM WILL BE TRANSFERRED TO AND ACCEPTED BY AN ENTITY WHICH COMPLIES WITH SECTION 40C-42.027, F.A.C. AND BE APPROVED BY THE SAINT JOHNS RIVER WATER MANAGEMENT DISTRICT PRIOR TO SUCH TERMINATION, DISSOLUTION, OR LIQUIDATION.

16. RETENTION AREAS AND COMMON OPEN SPACE AREAS ARE GRANTED AS EASEMENTS TO THE CITY OF PORT ORANGE WITH RIGHTS OF ACCESS, INGRESS, AND EGRESS, TOGETHER WITH THE RIGHT TO HARVEST EXCESS STORM WATER / GROUND WATER AS DEEMED APPROPRIATE IN THE DISCRETION OF THE CITY.

17. THE HOMEOWNERS ASSOCIATION OF WESTPORT RESERVE, INC. SHALL BE RESPONSIBLE FOR MAINTAINING ALL LANDSCAPING AND IRRIGATION IN COMMON OPEN SPACE AREAS.

18. THE ARTICLES OF INCORPORATION FOR THE HOMEOWNERS ASSOCIATION OF WESTPORT RESERVE, INC. ARE RECORDED IN OFFICIAL RECORDS BOOK ____, PAGES ____ THROUGH ____ OF THE PUBLIC RECORDS OF VOLUSIA COUNTY, FLORIDA.

19. THIS PLAT IS SUBJECT TO THE DECLARATION OF COVENANTS AND RESTRICTIONS FOR THE HOMEOWNERS ASSOCIATION OF WESTPORT RESERVE, INC. ARE RECORDED IN OFFICIAL RECORDS BOOK ____, PAGES ____ THROUGH ____, OF THE PUBLIC RECORDS OF VOLUSIA COUNTY, FLORIDA.

20. THIS PLAT SUBJECT TO THE EASEMENT AND COST SHARING AGREEMENT AS RECORDED IN OFFICIAL RECORDS BOOK ____, PAGES ____ THROUGH ____, OF THE PUBLIC RECORDS OF VOLUSIA COUNTY, FLORIDA.

21. THE ENTRY AND SIGNAGE EASEMENT SHOWN HEREON WITHIN TRACT "H" IS HEREBY GRANTED TO THE HOMEOWNERS ASSOCIATION OF WESTPORT RESERVE, INC.

Dewberry
131 WEST KALEY STREET
ORLANDO, FLORIDA 32806
PHONE: 321.354.9826 FAX: 407.648.9104
WWW.DEWBERRY.COM
CERTIFICATE OF AUTHORIZATION NO. LB 8011

Dewberry
131 West Kaley Street
Orlando, Florida 32806
Phone: 321.354.9826 Fax: 407.648.9104
www.dewberry.com
Certificate Of Authorization No. LB 8011

WESTPORT RESERVE

LYING IN SECTIONS 13 AND 14, TOWNSHIP 16 SOUTH, RANGE 32 EAST,
CITY OF PORT ORANGE, VOLUSIA COUNTY, FLORIDA

MAP BOOK: PAGE:

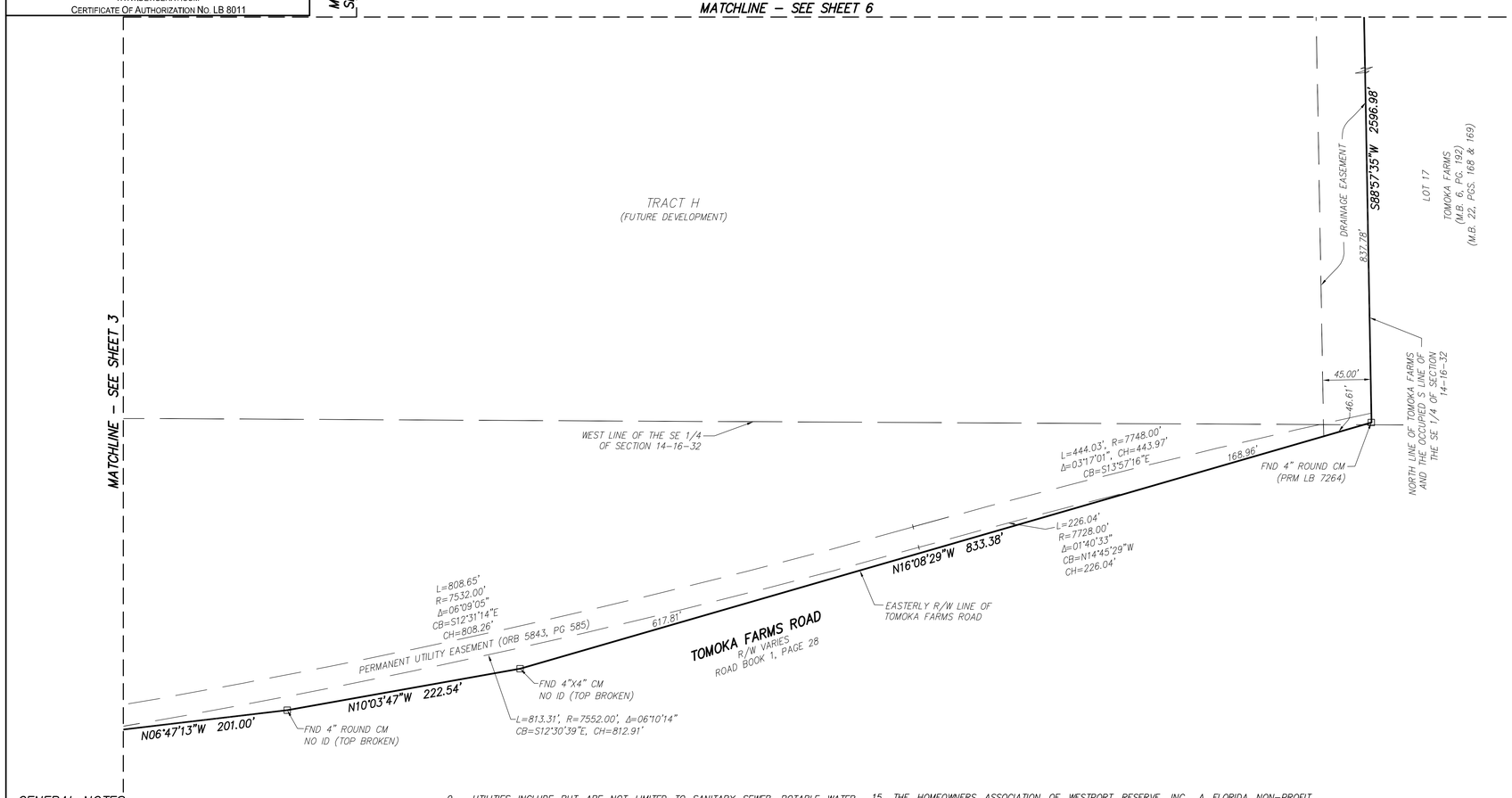

GENERAL NOTES:

1. MONUMENTATION:
   - ⊡ – DENOTES PERMANENT REFERENCE MONUMENT FOUND STAMPED AS NOTED
   - ■ – DENOTES PERMANENT REFERENCE MONUMENT SET 4"X4" CONCRETE MONUMENT STAMPED PRM LB 8011
   - ◎ – DENOTES PERMANENT CONTROL POINT SET NAIL AND DISK STAMPED PCP LB 8011

2. ALL LINES INTERSECTING CURVES ARE RADIAL UNLESS OTHERWISE NOTED
   (R) – DENOTES A LINE RADIAL RELATIVE TO ADJACENT CURVE.
   (NR) – DENOTES A LINE NOT RADIAL RELATIVE TO ADJACENT CURVE.

3. DIMENSIONS SHOWN ARE IN FEET AND DECIMALS THEREOF.

4. ACCURACY:
   - THE BOUNDARY LINEAR ERROR OF CLOSURE DOES NOT EXCEED 1:10,000.
   - THE BOUNDARY ANGULAR ERROR OF CLOSURE DOES NOT EXCEED 15 SECONDS MULTIPLIED BY THE SQUARE ROOT OF THE NUMBER OF ANGLES TURNED.

5. BEARINGS SHOWN HEREON ARE ASSUMED AND BASED ON THE OCCUPIED SOUTH LINE OF THE SE 1/4 OF SECTION 14, TOWNSHIP 16 SOUTH, RANGE 32 EAST, VOLUSIA COUNTY, FLORIDA, HAVING A BEARING OF S88°57'35"W.

6. NOTE: ALL MEASUREMENTS REFER TO HORIZONTAL PLANE IN ACCORDANCE WITH THE DEFINITION OF THE U.S. SURVEY FOOT OR METER ADOPTED BY THE NATIONAL INSTITUTE OF STANDARDS AND TECHNOLOGY. ALL MEASUREMENTS SHALL USE THE 39.37/12=3.280833333333 EQUATION FOR CONVERSION FROM A U.S. FOOT TO METERS.

7. NOTICE: THIS PLAT, AS RECORDED IN ITS GRAPHIC FORM, IS THE OFFICIAL DEPICTION OF THE SUBDIVIDED LANDS DESCRIBED HEREIN AND WILL IN NO CIRCUMSTANCES BE SUPPLANTED IN AUTHORITY BY ANY OTHER GRAPHIC OR DIGITAL FORM OF THE PLAT. THERE MAY BE ADDITIONAL RESTRICTIONS THAT ARE NOT RECORDED ON THIS PLAT THAT MAY BE FOUND IN THE PUBLIC RECORDS OF THIS COUNTY.

8. THIS PLAT IS SUBJECT TO ALL EASEMENTS OF RECORD AND RESERVATIONS OF EASEMENTS, INCLUDING BUT NOT LIMITED TO DRAINAGE, UTILITY, AND ACCESS EASEMENTS DEDICATED OR GRANTED HEREON WHICH SHALL BE LOCATED AS FOLLOWS EXCEPT AS OTHERWISE NOTED ON THE PLAT:

ENTIRE STREET FRONTAGES OF LOTS AND COMMON OPEN SPACE AREAS: 12.00 FEET WIDE

9. UTILITIES INCLUDE BUT ARE NOT LIMITED TO SANITARY SEWER, POTABLE WATER, RECLAIMED WATER, STORM DRAINAGE, ELECTRIC, TELEPHONE, CABLE TELEVISION, SECURITY, NATURAL GAS, FIBER OPTIC, TELECOMMUNICATION.

10. ALL PLATTED UTILITY EASEMENTS, EXCLUSIVE OF PRIVATE EASEMENTS GRANTED TO OR OBTAINED BY A PARTICULAR ELECTRIC, TELEPHONE, GAS OR OTHER PUBLIC UTILITY, SHALL ALSO BE EASEMENTS FOR THE CONSTRUCTION, INSTALLATION, MAINTENANCE, AND OPERATION OF CABLE TELEVISION SERVICES; PROVIDED, HOWEVER, NO SUCH CONSTRUCTION, INSTALLATION, MAINTENANCE, AND OPERATION OF CABLE TELEVISION SERVICES SHALL INTERFERE WITH THE FACILITIES AND SERVICES OF AN ELECTRIC, TELEPHONE, GAS OR OTHER PUBLIC UTILITY. IN THE EVENT A CABLE TELEVISION COMPANY DAMAGES THE FACILITIES OF A PUBLIC UTILITY, IT SHALL BE SOLELY RESPONSIBLE FOR THE DAMAGES PURSUANT TO SECTION 177.091(28), FLORIDA STATUTES. SUCH CONSTRUCTION, INSTALLATION, MAINTENANCE AND OPERATION SHALL COMPLY WITH THE NATIONAL ELECTRICAL SAFETY CODE AS ADOPTED BY THE FLORIDA PUBLIC SERVICE COMMISSION.

11. ALL OTHER EASEMENTS ARE SUBORDINATE TO ANY CONSERVATION EASEMENTS DEDICATED HEREON. THERE SHALL BE NO REMOVAL OR DISTURBANCE OF ANY VEGETATION WITHIN SUCH CONSERVATION EASEMENTS. ANY PROPOSED CONSTRUCTION OR OTHER USE WITHIN A CONSERVATION EASEMENT MUST BE REVIEWED AND APPROVED BY THE CITY OF PORT ORANGE AND ANY OTHER AUTHORITY HAVING JURISDICTION OVER THE CONSERVATION EASEMENT.

12. BUILDING SETBACK REQUIREMENTS:
    FRONT = 25 FEET
    REAR = 20 FEET
    SIDE = LOTS ≤ 65' = 5 FEET
    LOTS > 65' = 7.5 FEET
    SIDE CORNER = 20 FEET

13. LOT COVERAGE REQUIREMENTS:
    MAXIMUM COMMON OPEN SPACE = 40%
    MAXIMUM BUILDING COVERAGE = 50%
    MAXIMUM BUILDING HEIGHT = 36 FEET

14. THE COMMON OPEN SPACE AREAS GRANTED TO THE HOMEOWNERS ASSOCIATION OF WESTPORT RESERVE, INC. BY THIS PLAT SHALL BE SUBJECT TO EASEMENTS AS SHOWN OR DESCRIBED HEREON OR GRANTED IN ACCORDANCE WITH THE HOMEOWNERS ASSOCIATION OF WESTPORT RESERVE, INC.'S COVENANTS AND RESTRICTIONS. THE GRANTING OF SUCH COMMON OPEN SPACE AREAS IS NOT INTENDED TO GRANT ANY RIGHT TO THE GENERAL PUBLIC.

15. THE HOMEOWNERS ASSOCIATION OF WESTPORT RESERVE, INC., A FLORIDA NON-PROFIT CORPORATION SHALL BE RESPONSIBLE FOR THE OPERATION AND MAINTENANCE OF THE DRAINAGE SYSTEM SERVING THE AREA WITHIN THE BOUNDARIES OF THIS PLAT, AS DEPICTED ON THE STORMWATER MANAGEMENT PLAN APPROVED FOR THE DEVELOPMENT BY THE CITY OF PORT ORANGE, FLORIDA. SHOULD THE ASSOCIATION FAIL TO PERFORM THE MAINTENANCE OF THE DRAINAGE AND STORMWATER MANAGEMENT SYSTEMS, THE CITY OF PORT ORANGE SHALL BE ENTITLED TO ENTER UPON THE COMMON OPEN SPACE AREAS AND DESIGNATED EASEMENT AREAS TO PERFORM MAINTENANCE, REPAIR OR REPLACE THE FACILITIES; AND, SHALL HAVE THE RIGHT TO LIEN ALL OWNERS OF RECORD IN PROPERTY FOR THE COST OF SUCH MAINTENANCE, REPAIR, AND REPLACEMENT, AS DEEMED BY THE CITY TO BE NECESSARY. IN THE EVENT OF TERMINATION, DISSOLUTION, OR FINAL LIQUIDATION OF THE ASSOCIATION, THE RESPONSIBILITY FOR THE OPERATION AND MAINTENANCE OF THE SURFACE WATER OR STORM WATER MANAGEMENT SYSTEM WILL BE TRANSFERRED TO AND ACCEPTED BY AN ENTITY WHICH COMPLIES WITH SECTION 40C-42.027, F.A.C. AND BE APPROVED BY THE SAINT JOHNS RIVER WATER MANAGEMENT DISTRICT PRIOR TO SUCH TERMINATION, DISSOLUTION, OR LIQUIDATION.

16. RETENTION AREAS AND COMMON OPEN SPACE AREAS ARE GRANTED AS EASEMENTS TO THE CITY OF PORT ORANGE WITH RIGHTS OF ACCESS, INGRESS, AND EGRESS, TOGETHER WITH THE RIGHT TO HARVEST EXCESS STORM WATER / GROUND WATER AS DEEMED APPROPRIATE IN THE DISCRETION OF THE CITY.

17. THE HOMEOWNERS ASSOCIATION OF WESTPORT RESERVE, INC. SHALL BE RESPONSIBLE FOR MAINTAINING ALL LANDSCAPING AND IRRIGATION IN COMMON OPEN SPACE AREAS.

18. THE ARTICLES OF INCORPORATION FOR THE HOMEOWNERS ASSOCIATION OF WESTPORT RESERVE, INC. ARE RECORDED IN OFFICIAL RECORDS BOOK ____, PAGES ____ THROUGH ____ OF THE PUBLIC RECORDS OF VOLUSIA COUNTY, FLORIDA.

19. THIS PLAT IS SUBJECT TO THE DECLARATION OF COVENANTS AND RESTRICTIONS FOR THE HOMEOWNERS ASSOCIATION OF WESTPORT RESERVE, INC. ARE RECORDED IN OFFICIAL RECORDS BOOK ____, PAGES ____ THROUGH ____, OF THE PUBLIC RECORDS OF VOLUSIA COUNTY, FLORIDA.

20. THIS PLAT SUBJECT TO THE EASEMENT AND COST SHARING AGREEMENT AS RECORDED IN OFFICIAL RECORDS BOOK ____, PAGES ____ THROUGH ____, OF THE PUBLIC RECORDS OF VOLUSIA COUNTY, FLORIDA.

21. THE ENTRY AND SIGNAGE EASEMENT SHOWN HEREON WITHIN TRACT "H" IS HEREBY GRANTED TO THE HOMEOWNERS ASSOCIATION OF WESTPORT RESERVE, INC.

0 30 60 120
1 INCH = 60 FEET

SHEET INDEX

SHEET 1 – COVER SHEET, NOTES, LEGEND/ABBREVIATIONS
SHEET 2 – KEY MAP
SHEETS 3 TO 12 – DETAIL SHEETS

WESTPORT RESERVE

LYING IN SECTIONS 13 AND 14, TOWNSHIP 16 SOUTH, RANGE 32 EAST,
CITY OF PORT ORANGE, VOLUSIA COUNTY, FLORIDA

MAP BOOK: PAGE:

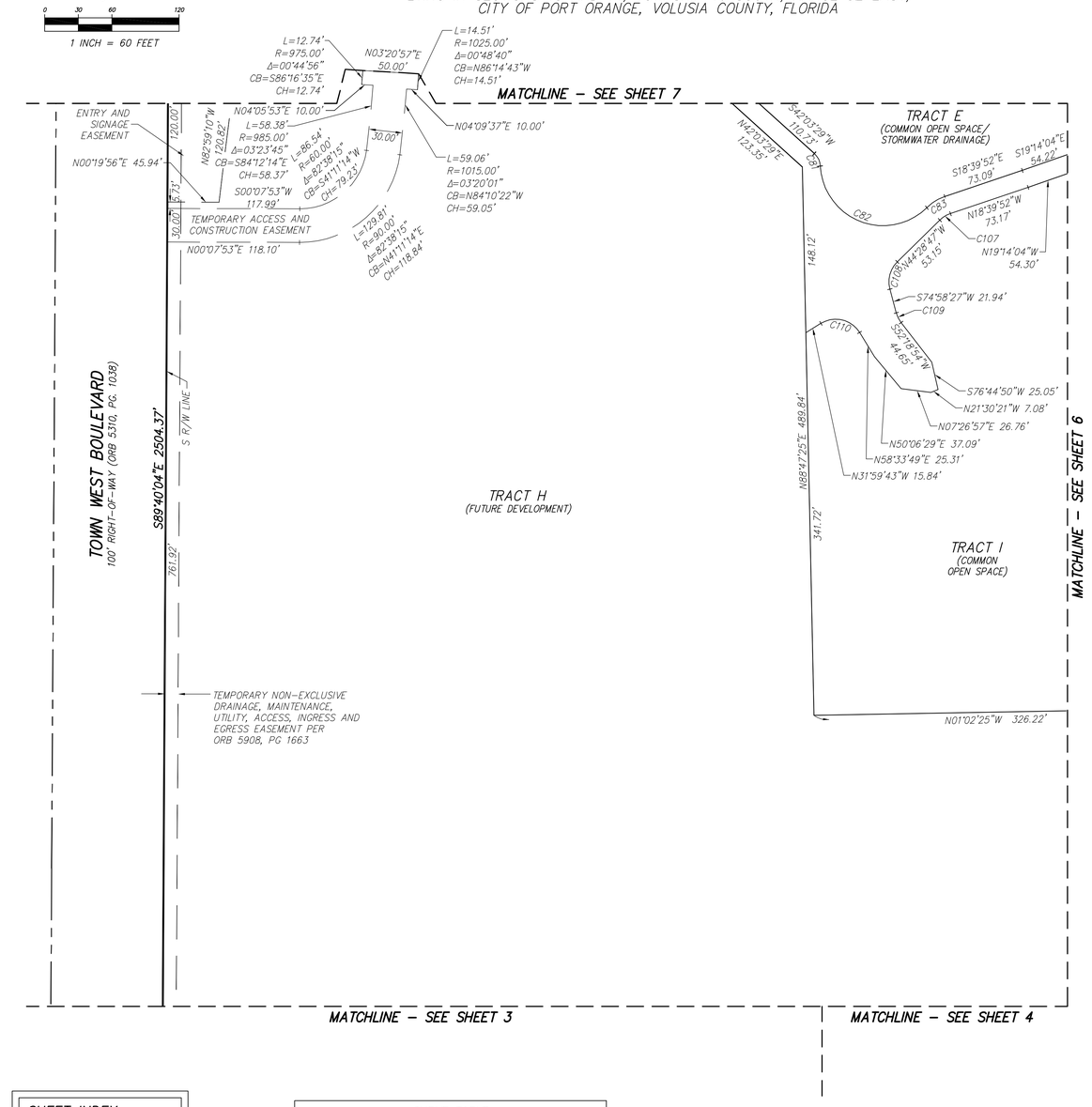

GENERAL NOTES:

1. MONUMENTATION:
   - ⊡ – DENOTES PERMANENT REFERENCE MONUMENT FOUND STAMPED AS NOTED
   - ■ – DENOTES PERMANENT REFERENCE MONUMENT SET 4"X4" CONCRETE MONUMENT STAMPED PRM LB 8011
   - ⊗ – DENOTES PERMANENT CONTROL POINT SET NAIL AND DISK STAMPED PCP LB 8011

2. ALL LINES INTERSECTING CURVES ARE RADIAL UNLESS OTHERWISE NOTED
   (R) – DENOTES A LINE RADIAL RELATIVE TO ADJACENT CURVE.
   (NR) – DENOTES A LINE NOT RADIAL RELATIVE TO ADJACENT CURVE.

3. DIMENSIONS SHOWN ARE IN FEET AND DECIMALS THEREOF.

4. ACCURACY:
   – THE BOUNDARY LINEAR ERROR OF CLOSURE DOES NOT EXCEED 1:10,000.
   – THE BOUNDARY ANGULAR ERROR OF CLOSURE DOES NOT EXCEED 15 SECONDS MULTIPLIED BY THE SQUARE ROOT OF THE NUMBER OF ANGLES TURNED.

5. BEARINGS SHOWN HEREON ARE ASSUMED AND BASED ON THE OCCUPIED SOUTH LINE OF THE SE 1/4 OF SECTION 14, TOWNSHIP 16 SOUTH, RANGE 32 EAST, VOLUSIA COUNTY, FLORIDA, HAVING A BEARING OF S88°57'35"W.

6. NOTE: ALL MEASUREMENTS REFER TO HORIZONTAL PLANE IN ACCORDANCE WITH THE DEFINITION OF THE U.S. SURVEY FOOT OR METER ADOPTED BY THE NATIONAL INSTITUTE OF STANDARDS AND TECHNOLOGY. ALL MEASUREMENTS SHALL USE THE 39.37/12=3.280833333333 EQUATION FOR CONVERSION FROM A U.S. FOOT TO METERS.

7. NOTICE: THIS PLAT, AS RECORDED IN ITS GRAPHIC FORM, IS THE OFFICIAL DEPICTION OF THE SUBDIVIDED LANDS DESCRIBED HEREIN AND WILL IN NO CIRCUMSTANCES BE SUPPLANTED IN AUTHORITY BY ANY OTHER GRAPHIC OR DIGITAL FORM OF THE PLAT. THERE MAY BE ADDITIONAL RESTRICTIONS THAT ARE NOT RECORDED ON THIS PLAT THAT MAY BE FOUND IN THE PUBLIC RECORDS OF THIS COUNTY.

8. THIS PLAT IS SUBJECT TO ALL EASEMENTS OF RECORD AND RESERVATIONS OF EASEMENTS, INCLUDING BUT NOT LIMITED TO DRAINAGE, UTILITY, AND ACCESS EASEMENTS DEDICATED OR GRANTED HEREON WHICH SHALL BE LOCATED AS FOLLOWS EXCEPT AS OTHERWISE NOTED ON THE PLAT:

   ENTIRE STREET FRONTAGES OF LOTS AND COMMON OPEN SPACE AREAS: 12.00 FEET WIDE

9. UTILITIES INCLUDE BUT ARE NOT LIMITED TO SANITARY SEWER, POTABLE WATER, RECLAIMED WATER, STORM DRAINAGE, ELECTRIC, TELEPHONE, CABLE TELEVISION, SECURITY, NATURAL GAS, FIBER OPTIC, TELECOMMUNICATION.

10. ALL PLATTED UTILITY EASEMENTS, EXCLUSIVE OF PRIVATE EASEMENTS GRANTED TO OR OBTAINED BY A PARTICULAR ELECTRIC, TELEPHONE, GAS OR OTHER PUBLIC UTILITY, SHALL ALSO BE EASEMENTS FOR THE CONSTRUCTION, INSTALLATION, MAINTENANCE, AND OPERATION OF CABLE TELEVISION SERVICES; PROVIDED, HOWEVER, NO SUCH CONSTRUCTION, INSTALLATION, MAINTENANCE, AND OPERATION OF CABLE TELEVISION SERVICES SHALL INTERFERE WITH THE FACILITIES AND SERVICES OF AN ELECTRIC, TELEPHONE, GAS OR OTHER PUBLIC UTILITY. IN THE EVENT A CABLE TELEVISION COMPANY DAMAGES THE FACILITIES OF A PUBLIC UTILITY, IT SHALL BE SOLELY RESPONSIBLE FOR THE DAMAGES PURSUANT TO SECTION 177.091(28), FLORIDA STATUTES. SUCH CONSTRUCTION, INSTALLATION, MAINTENANCE AND OPERATION SHALL COMPLY WITH THE NATIONAL ELECTRICAL SAFETY CODE AS ADOPTED BY THE FLORIDA PUBLIC SERVICE COMMISSION.

11. ALL OTHER EASEMENTS ARE SUBORDINATE TO ANY CONSERVATION EASEMENTS DEDICATED HEREON. THERE SHALL BE NO REMOVAL OR DISTURBANCE OF ANY VEGETATION WITHIN SUCH CONSERVATION EASEMENTS. ANY PROPOSED CONSTRUCTION OR OTHER USE WITHIN A CONSERVATION EASEMENT MUST BE REVIEWED AND APPROVED BY THE CITY OF PORT ORANGE AND ANY OTHER AUTHORITY HAVING JURISDICTION OVER THE CONSERVATION EASEMENT.

12. BUILDING SETBACK REQUIREMENTS:
    FRONT = 25 FEET
    REAR = 20 FEET
    SIDE = LOTS ≤ 65' = 5 FEET
    LOTS > 65' = 7.5 FEET
    SIDE CORNER = 20 FEET

13. LOT COVERAGE REQUIREMENTS:
    MAXIMUM COMMON OPEN SPACE = 40%
    MAXIMUM BUILDING COVERAGE = 50%
    MAXIMUM BUILDING HEIGHT = 36 FEET

14. THE COMMON OPEN SPACE AREAS GRANTED TO THE HOMEOWNERS ASSOCIATION OF WESTPORT RESERVE, INC. BY THIS PLAT SHALL BE SUBJECT TO EASEMENTS AS SHOWN OR DESCRIBED HEREON OR GRANTED IN ACCORDANCE WITH THE HOMEOWNERS ASSOCIATION OF WESTPORT RESERVE, INC.'S COVENANTS AND RESTRICTIONS. THE GRANTING OF SUCH COMMON OPEN SPACE AREAS IS NOT INTENDED TO GRANT ANY RIGHT TO THE GENERAL PUBLIC.

15. THE HOMEOWNERS ASSOCIATION OF WESTPORT RESERVE, INC., A FLORIDA NON-PROFIT CORPORATION SHALL BE RESPONSIBLE FOR THE OPERATION AND MAINTENANCE OF THE DRAINAGE SYSTEM SERVING THE AREA WITHIN THE BOUNDARIES OF THIS PLAT, AS DEPICTED ON THE STORMWATER MANAGEMENT PLAN APPROVED FOR THE DEVELOPMENT BY THE CITY OF PORT ORANGE, FLORIDA. SHOULD THE ASSOCIATION FAIL TO PERFORM THE MAINTENANCE OF THE DRAINAGE AND STORMWATER MANAGEMENT SYSTEMS, THE CITY OF PORT ORANGE SHALL BE ENTITLED TO ENTER UPON THE COMMON OPEN SPACE AREAS AND DESIGNATED EASEMENT AREAS TO PERFORM MAINTENANCE, REPAIR OR REPLACE THE FACILITIES; AND, SHALL HAVE THE RIGHT TO LIEN ALL OWNERS OF RECORD IN PROPERTY FOR THE COST OF SUCH MAINTENANCE, REPAIR, AND REPLACEMENT, AS DEEMED BY THE CITY TO BE NECESSARY. IN THE EVENT OF TERMINATION, DISSOLUTION, OR FINAL LIQUIDATION OF THE ASSOCIATION, THE RESPONSIBILITY FOR THE OPERATION AND MAINTENANCE OF THE SURFACE WATER OR STORM WATER MANAGEMENT SYSTEM WILL BE TRANSFERRED TO AND ACCEPTED BY AN ENTITY WHICH COMPLIES WITH SECTION 40C-42.027, F.A.C. AND BE APPROVED BY THE SAINT JOHNS RIVER WATER MANAGEMENT DISTRICT PRIOR TO SUCH TERMINATION, DISSOLUTION, OR LIQUIDATION.

16. RETENTION AREAS AND COMMON OPEN SPACE AREAS ARE GRANTED AS EASEMENTS TO THE CITY OF PORT ORANGE WITH RIGHTS OF ACCESS, INGRESS, AND EGRESS, TOGETHER WITH THE RIGHT TO HARVEST EXCESS STORM WATER / GROUND WATER AS DEEMED APPROPRIATE IN THE DISCRETION OF THE CITY.

17. THE HOMEOWNERS ASSOCIATION OF WESTPORT RESERVE, INC. SHALL BE RESPONSIBLE FOR MAINTAINING ALL LANDSCAPING AND IRRIGATION IN COMMON OPEN SPACE AREAS.

18. THE ARTICLES OF INCORPORATION FOR THE HOMEOWNERS ASSOCIATION OF WESTPORT RESERVE, INC. ARE RECORDED IN OFFICIAL RECORDS BOOK _____, PAGES _____ THROUGH _____ OF THE PUBLIC RECORDS OF VOLUSIA COUNTY, FLORIDA.

19. THIS PLAT IS SUBJECT TO THE DECLARATION OF COVENANTS AND RESTRICTIONS FOR THE HOMEOWNERS ASSOCIATION OF WESTPORT RESERVE, INC. ARE RECORDED IN OFFICIAL RECORDS BOOK _____, PAGES _____ THROUGH _____, OF THE PUBLIC RECORDS OF VOLUSIA COUNTY, FLORIDA.

20. THIS PLAT SUBJECT TO THE EASEMENT AND COST SHARING AGREEMENT AS RECORDED IN OFFICIAL RECORDS BOOK _____, PAGES _____ THROUGH _____, OF THE PUBLIC RECORDS OF VOLUSIA COUNTY, FLORIDA.

21. THE ENTRY AND SIGNAGE EASEMENT SHOWN HEREON WITHIN TRACT "H" IS HEREBY GRANTED TO THE HOMEOWNERS ASSOCIATION OF WESTPORT RESERVE, INC.

SHEET INDEX

SHEET 1 – COVER SHEET, NOTES, LEGEND/ABBREVATIONS
SHEET 2 – KEY MAP
SHEETS 3 TO 12 – DETAIL SHEETS

CURVE TABLE

CURVE	LENGTH	RADIUS	DELTA	CHORD	BEARING
C81	12.61'	16.00	45°08'40"	12.28'	N64°37'49"E
C82	128.70'	56.00	131°40'56"	102.19'	S21°21'41"W
C83	18.47'	41.00	25°48'55"	18.32'	N31°34'19"W
C107	11.26'	25.00	25°48'55"	11.17'	N31°34'19"W
C108	26.42'	25.00	60°32'46"	25.21'	N74°45'10"W
C109	9.89'	25.00	22°39'33"	9.82'	S63°38'40"W
C110	39.51'	25.00	90°33'32"	35.53'	N13°17'03"E

Dewberry
131 WEST KALEY STREET
ORLANDO, FLORIDA 32806
PHONE: 321.354.9826 FAX: 407.648.9104
WWW.DEWBERRY.COM
CERTIFICATE OF AUTHORIZATION NO. LB 8011

WESTPORT RESERVE

LYING IN SECTIONS 13 AND 14, TOWNSHIP 16 SOUTH, RANGE 32 EAST,
CITY OF PORT ORANGE, VOLUSIA COUNTY, FLORIDA

MAP BOOK: PAGE:

0 30 60 120

1 INCH = 60 FEET

SHEET INDEX

SHEET 1 – COVER SHEET, NOTES, LEGEND/ABBREVATIONS
SHEET 2 – KEY MAP
SHEETS 3 TO 12 – DETAIL SHEETS

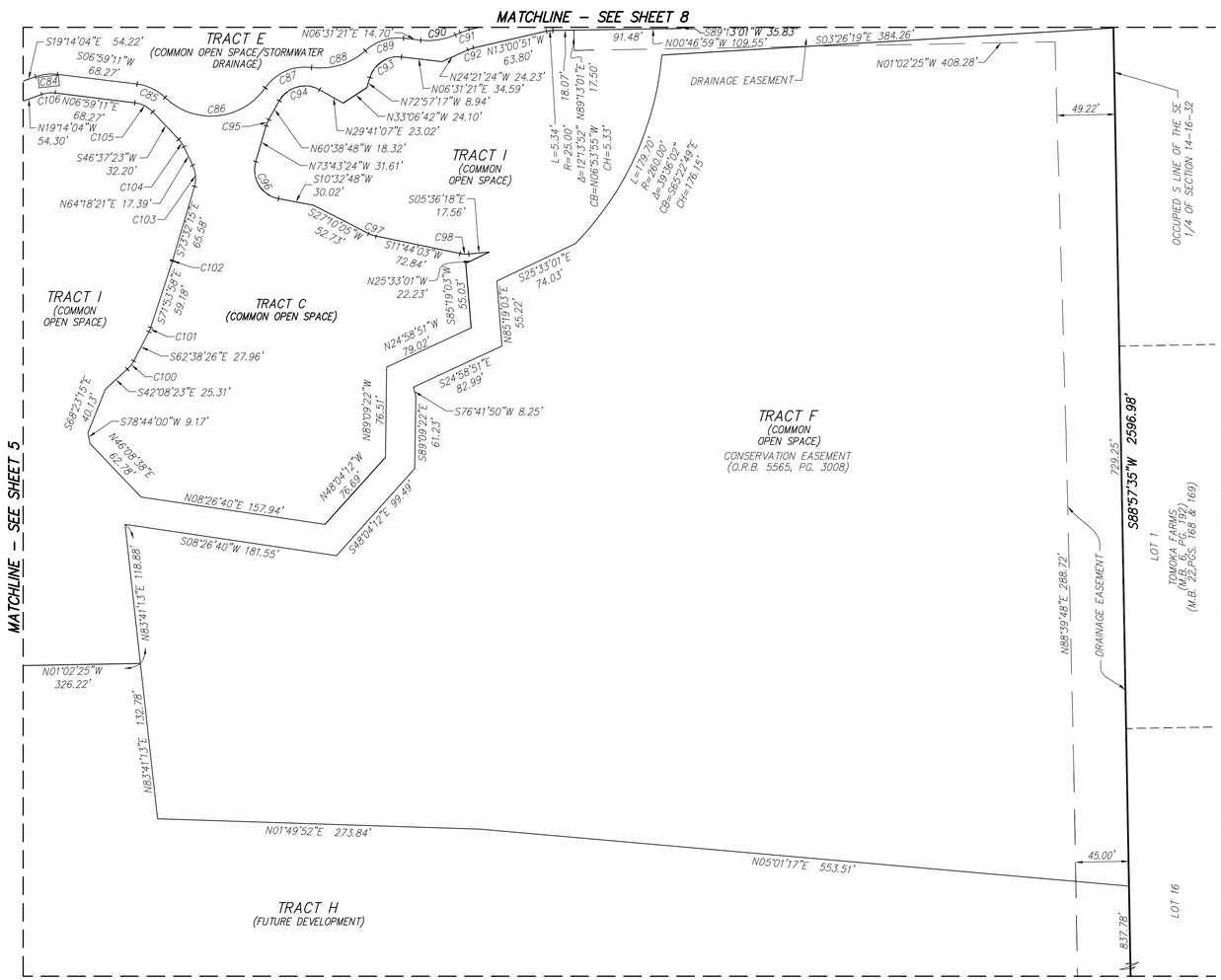

GENERAL NOTES:

1. MONUMENTATION:
   - ⊡ – DENOTES PERMANENT REFERENCE MONUMENT FOUND STAMPED AS NOTED
   - ■ – DENOTES PERMANENT REFERENCE MONUMENT SET 4"X4" CONCRETE MONUMENT STAMPED PRM LB 8011
   - ◎ – DENOTES PERMANENT CONTROL POINT SET NAIL AND DISK STAMPED PCP LB 8011

2. ALL LINES INTERSECTING CURVES ARE RADIAL UNLESS OTHERWISE NOTED (R) – DENOTES A LINE RADIAL RELATIVE TO ADJACENT CURVE. (NR) – DENOTES A LINE NOT RADIAL RELATIVE TO ADJACENT CURVE.

3. DIMENSIONS SHOWN ARE IN FEET AND DECIMALS THEREOF.

4. ACCURACY:
   – THE BOUNDARY LINEAR ERROR OF CLOSURE DOES NOT EXCEED 1:10,000.
   – THE BOUNDARY ANGULAR ERROR OF CLOSURE DOES NOT EXCEED 15 SECONDS MULTIPLIED BY THE SQUARE ROOT OF THE NUMBER OF ANGLES TURNED.

5. BEARINGS SHOWN HEREON ARE ASSUMED AND BASED ON THE OCCUPIED SOUTH LINE OF THE SE 1/4 OF SECTION 14, TOWNSHIP 16 SOUTH, RANGE 32 EAST, VOLUSIA COUNTY, FLORIDA, HAVING A BEARING OF S88°57'35"W.

6. NOTE: ALL MEASUREMENTS REFER TO HORIZONTAL PLANE IN ACCORDANCE WITH THE DEFINITION OF THE U.S. SURVEY FOOT OR METER ADOPTED BY THE NATIONAL INSTITUTE OF STANDARDS AND TECHNOLOGY. ALL MEASUREMENTS SHALL USE THE 39.37/12=3.280833333333 EQUATION FOR CONVERSION FROM A U.S. FOOT TO METERS.

7. NOTICE: THIS PLAT, AS RECORDED IN ITS GRAPHIC FORM, IS THE OFFICIAL DEPICTION OF THE SUBDIVIDED LANDS DESCRIBED HEREIN AND WILL IN NO CIRCUMSTANCES BE SUPPLANTED IN AUTHORITY BY ANY OTHER GRAPHIC OR DIGITAL FORM OF THE PLAT. THERE MAY BE ADDITIONAL RESTRICTIONS THAT ARE NOT RECORDED ON THIS PLAT THAT MAY BE FOUND IN THE PUBLIC RECORDS OF THIS COUNTY.

8. THIS PLAT IS SUBJECT TO ALL EASEMENTS OF RECORD AND RESERVATIONS OF EASEMENTS, INCLUDING BUT NOT LIMITED TO DRAINAGE, UTILITY, AND ACCESS EASEMENTS DEDICATED OR GRANTED HEREON WHICH SHALL BE LOCATED AS FOLLOWS EXCEPT AS OTHERWISE NOTED ON THE PLAT:

ENTIRE STREET FRONTAGES OF LOTS AND COMMON OPEN SPACE AREAS: 12.00 FEET WIDE

9. UTILITIES INCLUDE BUT ARE NOT LIMITED TO SANITARY SEWER, POTABLE WATER, RECLAIMED WATER, STORM DRAINAGE, ELECTRIC, TELEPHONE, CABLE TELEVISION, SECURITY, NATURAL GAS, FIBER OPTIC, TELECOMMUNICATION.

10. ALL PLATTED UTILITY EASEMENTS, EXCLUSIVE OF PRIVATE EASEMENTS GRANTED TO OR OBTAINED BY A PARTICULAR ELECTRIC, TELEPHONE, GAS OR OTHER PUBLIC UTILITY, SHALL ALSO BE EASEMENTS FOR THE CONSTRUCTION, INSTALLATION, MAINTENANCE, AND OPERATION OF CABLE TELEVISION SERVICES; PROVIDED, HOWEVER, NO SUCH CONSTRUCTION, INSTALLATION, MAINTENANCE, AND OPERATION OF CABLE TELEVISION SERVICES SHALL INTERFERE WITH THE FACILITIES AND SERVICES OF AN ELECTRIC, TELEPHONE, GAS OR OTHER PUBLIC UTILITY. IN THE EVENT A CABLE TELEVISION COMPANY DAMAGES THE FACILITIES OF A PUBLIC UTILITY, IT SHALL BE SOLELY RESPONSIBLE FOR THE DAMAGES PURSUANT TO SECTION 177.091(28), FLORIDA STATUTES. SUCH CONSTRUCTION, INSTALLATION, MAINTENANCE AND OPERATION SHALL COMPLY WITH THE NATIONAL ELECTRICAL SAFETY CODE AS ADOPTED BY THE FLORIDA PUBLIC SERVICE COMMISSION.

11. ALL OTHER EASEMENTS ARE SUBORDINATE TO ANY CONSERVATION EASEMENTS DEDICATED HEREON. THERE SHALL BE NO REMOVAL OR DISTURBANCE OF ANY VEGETATION WITHIN SUCH CONSERVATION EASEMENTS. ANY PROPOSED CONSTRUCTION OR OTHER USE WITHIN A CONSERVATION EASEMENT MUST BE REVIEWED AND APPROVED BY THE CITY OF PORT ORANGE AND ANY OTHER AUTHORITY HAVING JURISDICTION OVER THE CONSERVATION EASEMENT.

12. BUILDING SETBACK REQUIREMENTS:
    FRONT = 25 FEET
    REAR = 20 FEET
    SIDE = LOTS ≤ 65' = 5 FEET
    LOTS > 65' = 7.5 FEET
    SIDE CORNER = 20 FEET

13. LOT COVERAGE REQUIREMENTS:
    MAXIMUM COMMON OPEN SPACE = 40%
    MAXIMUM BUILDING COVERAGE = 50%
    MAXIMUM BUILDING HEIGHT = 36 FEET

14. THE COMMON OPEN SPACE AREAS GRANTED TO THE HOMEOWNERS ASSOCIATION OF WESTPORT RESERVE, INC. BY THIS PLAT SHALL BE SUBJECT TO EASEMENTS AS SHOWN OR DESCRIBED HEREON OR GRANTED IN ACCORDANCE WITH THE HOMEOWNERS ASSOCIATION OF WESTPORT RESERVE, INC.'S COVENANTS AND RESTRICTIONS. THE GRANTING OF SUCH COMMON OPEN SPACE AREAS IS NOT INTENDED TO GRANT ANY RIGHT TO THE GENERAL PUBLIC.

15. THE HOMEOWNERS ASSOCIATION OF WESTPORT RESERVE, INC., A FLORIDA NON–PROFIT CORPORATION SHALL BE RESPONSIBLE FOR THE OPERATION AND MAINTENANCE OF THE DRAINAGE SYSTEM SERVING THE AREA WITHIN THE BOUNDARIES OF THIS PLAT, AS DEPICTED ON THE STORMWATER MANAGEMENT PLAN APPROVED FOR THE DEVELOPMENT BY THE CITY OF PORT ORANGE, FLORIDA. SHOULD THE ASSOCIATION FAIL TO PERFORM THE MAINTENANCE OF THE DRAINAGE AND STORMWATER MANAGEMENT SYSTEMS, THE CITY OF PORT ORANGE SHALL BE ENTITLED TO ENTER UPON THE COMMON OPEN SPACE AREAS AND DESIGNATED EASEMENT AREAS TO PERFORM MAINTENANCE, REPAIR OR REPLACE THE FACILITIES; AND, SHALL HAVE THE RIGHT TO LIEN ALL OWNERS OF RECORD IN PROPERTY FOR THE COST OF SUCH MAINTENANCE, REPAIR, AND REPLACEMENT, AS DEEMED BY THE CITY TO BE NECESSARY. IN THE EVENT OF TERMINATION, DISSOLUTION, OR FINAL LIQUIDATION OF THE ASSOCIATION, THE RESPONSIBILITY FOR THE OPERATION AND MAINTENANCE OF THE SURFACE WATER OR STORM WATER MANAGEMENT SYSTEM WILL BE TRANSFERRED TO AND ACCEPTED BY AN ENTITY WHICH COMPLIES WITH SECTION 40C–42.027, F.A.C. AND BE APPROVED BY THE SAINT JOHNS RIVER WATER MANAGEMENT DISTRICT PRIOR TO SUCH TERMINATION, DISSOLUTION, OR LIQUIDATION.

16. RETENTION AREAS AND COMMON OPEN SPACE AREAS ARE GRANTED AS EASEMENTS TO THE CITY OF PORT ORANGE WITH RIGHTS OF ACCESS, INGRESS, AND EGRESS, TOGETHER WITH THE RIGHT TO HARVEST EXCESS STORM WATER / GROUND WATER AS DEEMED APPROPRIATE IN THE DISCRETION OF THE CITY.

17. THE HOMEOWNERS ASSOCIATION OF WESTPORT RESERVE, INC. SHALL BE RESPONSIBLE FOR MAINTAINING ALL LANDSCAPING AND IRRIGATION IN COMMON OPEN SPACE AREAS.

18. THE ARTICLES OF INCORPORATION FOR THE HOMEOWNERS ASSOCIATION OF WESTPORT RESERVE, INC. ARE RECORDED IN OFFICIAL RECORDS BOOK ____, PAGES ____ THROUGH ____ OF THE PUBLIC RECORDS OF VOLUSIA COUNTY, FLORIDA.

19. THIS PLAT IS SUBJECT TO THE DECLARATION OF COVENANTS AND RESTRICTIONS FOR THE HOMEOWNERS ASSOCIATION OF WESTPORT RESERVE, INC. ARE RECORDED IN OFFICIAL RECORDS BOOK ____, PAGES ____ THROUGH ____, OF THE PUBLIC RECORDS OF VOLUSIA COUNTY, FLORIDA.

20. THIS PLAT SUBJECT TO THE EASEMENT AND COST SHARING AGREEMENT AS RECORDED IN OFFICIAL RECORDS BOOK ____, PAGES ____ THROUGH ____, OF THE PUBLIC RECORDS OF VOLUSIA COUNTY, FLORIDA.

21. THE ENTRY AND SIGNAGE EASEMENT SHOWN HEREON WITHIN TRACT "H" IS HEREBY GRANTED TO THE HOMEOWNERS ASSOCIATION OF WESTPORT RESERVE, INC.

CURVE TABLE

CURVE	LENGTH	RADIUS	DELTA	CHORD	BEARING
C84	18.76'	41.00	26°13'16"	18.60'	S06°07'27"E
C85	26.69'	41.00	37°17'56"	26.22'	S25°38'10"W
C86	97.35'	56.00	99°35'55"	85.54'	S05°30'50"E
C87	45.26'	41.00	63°15'10"	43.00'	S23°41'12"E
C88	49.43'	56.00	50°34'12"	47.84'	S17°20'43"E
C89	35.17'	41.00	49°09'10"	34.10'	S18°03'14"E
C90	30.18'	56.00	30°52'45"	29.82'	S08°55'02"E
C91	8.12'	41.00	11°20'33"	8.10'	S18°41'08"E
C92	4.95'	25.00	11°20'33"	4.94'	N18°41'08"W
C93	34.68'	25.00	79°28'38"	31.96'	N33°12'58"W

CURVE TABLE

CURVE	LENGTH	RADIUS	DELTA	CHORD	BEARING
C94	39.41'	25.00	90°19'55"	35.46'	N15°28'51"W
C95	5.71'	25.00	13°04'36"	5.69'	N67°11'06"W
C96	41.77'	25.00	95°43'48"	37.08'	S58°24'42"W
C97	6.73'	25.00	15°26'02"	6.71'	S19°27'04"W
C98	7.57'	25.00	17°20'21"	7.54'	S03°03'52"W
C100	8.95'	25.00	20°30'03"	8.90'	S52°23'25"E
C101	4.04'	25.00	09°15'32"	4.04'	S67°16'12"E
C102	0.71'	25.00	01°38'17"	0.71'	S72°43'07"E
C103	18.39'	25.00	42°09'24"	17.98'	N85°23'03"E
C104	7.72'	25.00	17°40'58"	7.69'	N55°27'52"E
C105	17.29'	25.00	39°38'11"	16.95'	N26°48'17"E
C106	11.44'	25.00	26°13'16"	11.34'	N06°07'27"W

Dewberry
131 WEST KALEY STREET
ORLANDO, FLORIDA 32806
PHONE: 321.354.9826 FAX: 407.648.9104
WWW.DEWBERRY.COM
CERTIFICATE OF AUTHORIZATION NO. LB 8011

WESTPORT RESERVE

LYING IN SECTIONS 13 AND 14, TOWNSHIP 16 SOUTH, RANGE 32 EAST,
CITY OF PORT ORANGE, VOLUSIA COUNTY, FLORIDA

MAP BOOK: PAGE:

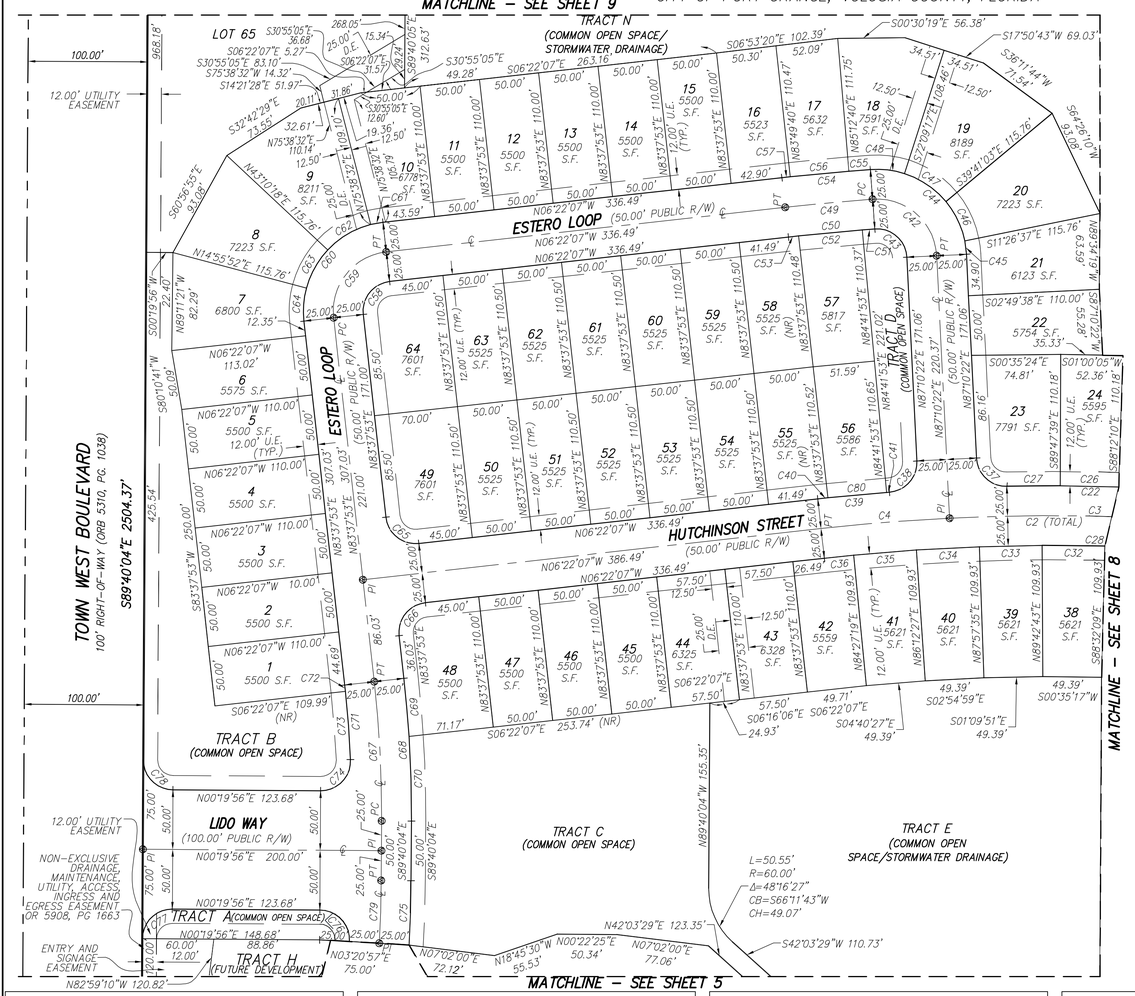

GENERAL NOTES:

1. MONUMENTATION:
   - ⊡ – DENOTES PERMANENT REFERENCE MONUMENT FOUND STAMPED AS NOTED
   - ■ – DENOTES PERMANENT REFERENCE MONUMENT SET 4"X4" CONCRETE MONUMENT STAMPED PRM LB 8011
   - ◎ – DENOTES PERMANENT CONTROL POINT SET NAIL AND DISK STAMPED PCP LB 8011
2. ALL LINES INTERSECTING CURVES ARE RADIAL UNLESS OTHERWISE NOTED
   (R) – DENOTES A LINE RADIAL RELATIVE TO ADJACENT CURVE.
   (NR) – DENOTES A LINE NOT RADIAL RELATIVE TO ADJACENT CURVE.
3. DIMENSIONS SHOWN ARE IN FEET AND DECIMALS THEREOF.
4. ACCURACY:
   – THE BOUNDARY LINEAR ERROR OF CLOSURE DOES NOT EXCEED 1:10,000.
   – THE BOUNDARY ANGULAR ERROR OF CLOSURE DOES NOT EXCEED 15 SECONDS MULTIPLIED BY THE SQUARE ROOT OF THE NUMBER OF ANGLES TURNED.
5. BEARINGS SHOWN HEREON ARE ASSUMED AND BASED ON THE OCCUPIED SOUTH LINE OF THE SE 1/4 OF SECTION 14, TOWNSHIP 16 SOUTH, RANGE 32 EAST, VOLUSIA COUNTY, FLORIDA, HAVING A BEARING OF S88°57'35"W.
6. NOTE: ALL MEASUREMENTS REFER TO HORIZONTAL PLANE IN ACCORDANCE WITH THE DEFINITION OF THE U.S. SURVEY FOOT OR METER ADOPTED BY THE NATIONAL INSTITUTE OF STANDARDS AND TECHNOLOGY. ALL MEASUREMENTS SHALL USE THE 39.37/12=3.28083333333 EQUATION FOR CONVERSION FROM A U.S. FOOT TO METERS.
7. NOTICE: THIS PLAT, AS RECORDED IN ITS GRAPHIC FORM, IS THE OFFICIAL DEPICTION OF THE SUBDIVIDED LANDS DESCRIBED HEREIN AND WILL IN NO CIRCUMSTANCES BE SUPPLANTED IN AUTHORITY BY ANY OTHER GRAPHIC OR DIGITAL FORM OF THE PLAT. THERE MAY BE ADDITIONAL RESTRICTIONS THAT ARE NOT RECORDED ON THIS PLAT THAT MAY BE FOUND IN THE PUBLIC RECORDS OF THIS COUNTY.
8. THIS PLAT IS SUBJECT TO ALL EASEMENTS OF RECORD AND RESERVATIONS OF EASEMENTS, INCLUDING BUT NOT LIMITED TO DRAINAGE, UTILITY, AND ACCESS EASEMENTS DEDICATED OR GRANTED HEREON WHICH SHALL BE LOCATED AS FOLLOWS EXCEPT AS OTHERWISE NOTED ON THE PLAT:

   ENTIRE STREET FRONTAGES OF LOTS AND COMMON OPEN SPACE AREAS: 12.00 FEET WIDE
9. UTILITIES INCLUDE BUT ARE NOT LIMITED TO SANITARY SEWER, POTABLE WATER, RECLAIMED WATER, STORM DRAINAGE, ELECTRIC, TELEPHONE, CABLE TELEVISION, SECURITY, NATURAL GAS, FIBER OPTIC, TELECOMMUNICATION.
10. ALL PLATTED UTILITY EASEMENTS, EXCLUSIVE OF PRIVATE EASEMENTS GRANTED TO OR OBTAINED BY A PARTICULAR ELECTRIC, TELEPHONE, GAS OR OTHER PUBLIC UTILITY, SHALL ALSO BE EASEMENTS FOR THE CONSTRUCTION, INSTALLATION, MAINTENANCE, AND OPERATION OF CABLE TELEVISION SERVICES; PROVIDED, HOWEVER, NO SUCH CONSTRUCTION, INSTALLATION, MAINTENANCE, AND OPERATION OF CABLE TELEVISION SERVICES SHALL INTERFERE WITH THE FACILITIES AND SERVICES OF AN ELECTRIC, TELEPHONE, GAS OR OTHER PUBLIC UTILITY. IN THE EVENT A CABLE TELEVISION COMPANY DAMAGES THE FACILITIES OF A PUBLIC UTILITY, IT SHALL BE SOLELY RESPONSIBLE FOR THE DAMAGES PURSUANT TO SECTION 177.091(28), FLORIDA STATUTES. SUCH CONSTRUCTION, INSTALLATION, MAINTENANCE AND OPERATION SHALL COMPLY WITH THE NATIONAL ELECTRICAL SAFETY CODE AS ADOPTED BY THE FLORIDA PUBLIC SERVICE COMMISSION.
11. ALL OTHER EASEMENTS ARE SUBORDINATE TO ANY CONSERVATION EASEMENTS DEDICATED HEREON. THERE SHALL BE NO REMOVAL OR DISTURBANCE OF ANY VEGETATION WITHIN SUCH CONSERVATION EASEMENTS. ANY PROPOSED CONSTRUCTION OR OTHER USE WITHIN A CONSERVATION EASEMENT MUST BE REVIEWED AND APPROVED BY THE CITY OF PORT ORANGE AND ANY OTHER AUTHORITY HAVING JURISDICTION OVER THE CONSERVATION EASEMENT.
12. BUILDING SETBACK REQUIREMENTS:
    FRONT = 25 FEET
    REAR = 20 FEET
    SIDE = LOTS ≤ 65' = 5 FEET
    LOTS > 65' = 7.5 FEET
    SIDE CORNER = 25 FEET
13. LOT COVERAGE REQUIREMENTS:
    MAXIMUM COMMON OPEN SPACE = 40%
    MAXIMUM BUILDING COVERAGE = 50%
    MAXIMUM BUILDING HEIGHT = 36 FEET
14. THE COMMON OPEN SPACE AREAS GRANTED TO THE HOMEOWNERS ASSOCIATION OF WESTPORT RESERVE, INC. BY THIS PLAT SHALL BE SUBJECT TO EASEMENTS AS SHOWN OR DESCRIBED HEREON OR GRANTED IN ACCORDANCE WITH THE HOMEOWNERS ASSOCIATION OF WESTPORT RESERVE, INC.'S COVENANTS AND RESTRICTIONS. THE GRANTING OF SUCH COMMON OPEN SPACE AREAS IS NOT INTENDED TO GRANT ANY RIGHT TO THE GENERAL PUBLIC.
15. THE HOMEOWNERS ASSOCIATION OF WESTPORT RESERVE, INC., A FLORIDA NON-PROFIT CORPORATION SHALL BE RESPONSIBLE FOR THE OPERATION AND MAINTENANCE OF THE DRAINAGE SYSTEM SERVING THE AREA WITHIN THE BOUNDARIES OF THIS PLAT, AS DEPICTED ON THE STORMWATER MANAGEMENT PLAN APPROVED FOR THE DEVELOPMENT BY THE CITY OF PORT ORANGE, FLORIDA. SHOULD THE ASSOCIATION FAIL TO PERFORM THE MAINTENANCE OF THE DRAINAGE AND STORMWATER MANAGEMENT SYSTEMS, THE CITY OF PORT ORANGE SHALL BE ENTITLED TO ENTER UPON THE COMMON OPEN SPACE AREAS AND DESIGNATED EASEMENT AREAS TO PERFORM MAINTENANCE, REPAIR OR REPLACE THE FACILITIES; AND, SHALL HAVE THE RIGHT TO LIEN ALL OWNERS OF RECORD IN PROPERTY FOR THE COST OF SUCH MAINTENANCE, REPAIR, AND REPLACEMENT, AS DEEMED BY THE CITY TO BE NECESSARY. IN THE EVENT OF TERMINATION, DISSOLUTION, OR FINAL LIQUIDATION OF THE ASSOCIATION, THE RESPONSIBILITY FOR THE OPERATION AND MAINTENANCE OF THE SURFACE WATER OR STORM WATER MANAGEMENT SYSTEM WILL BE TRANSFERRED TO AND ACCEPTED BY AN ENTITY WHICH COMPLIES WITH SECTION 40C-42.027, F.A.C. AND BE APPROVED BY THE SAINT JOHNS RIVER WATER MANAGEMENT DISTRICT PRIOR TO SUCH TERMINATION, DISSOLUTION, OR LIQUIDATION.
16. RETENTION AREAS AND COMMON OPEN SPACE AREAS ARE GRANTED AS EASEMENTS TO THE CITY OF PORT ORANGE WITH RIGHTS OF ACCESS, INGRESS, AND EGRESS, TOGETHER WITH THE RIGHT TO HARVEST EXCESS STORM WATER / GROUND WATER AS DEEMED APPROPRIATE IN THE DISCRETION OF THE CITY.
17. THE HOMEOWNERS ASSOCIATION OF WESTPORT RESERVE, INC. SHALL BE RESPONSIBLE FOR MAINTAINING ALL LANDSCAPING AND IRRIGATION IN COMMON OPEN SPACE AREAS.
18. THE ARTICLES OF INCORPORATION FOR THE HOMEOWNERS ASSOCIATION OF WESTPORT RESERVE, INC. ARE RECORDED IN OFFICIAL RECORDS BOOK ____, PAGES ____ THROUGH ____ OF THE PUBLIC RECORDS OF VOLUSIA COUNTY, FLORIDA.
19. THIS PLAT IS SUBJECT TO THE DECLARATION OF COVENANTS AND RESTRICTIONS FOR THE HOMEOWNERS ASSOCIATION OF WESTPORT RESERVE, INC. ARE RECORDED IN OFFICIAL RECORDS BOOK ____, PAGES ____ THROUGH ____, OF THE PUBLIC RECORDS OF VOLUSIA COUNTY, FLORIDA.
20. THIS PLAT SUBJECT TO THE EASEMENT AND COST SHARING AGREEMENT AS RECORDED IN OFFICIAL RECORDS BOOK ____, PAGES ____ THROUGH ____, OF THE PUBLIC RECORDS OF VOLUSIA COUNTY, FLORIDA.
21. THE ENTRY AND SIGNAGE EASEMENT SHOWN HEREON WITHIN TRACT "H" IS HEREBY GRANTED TO THE HOMEOWNERS ASSOCIATION OF WESTPORT RESERVE, INC.

CURVE TABLE

CURVE	LENGTH	RADIUS	DELTA	CHORD	BEARING
C2	381.45'	1750.00	12°29'20"	380.70'	N00°07'27"W
C3	273.29'	1750.00	08°56'51"	273.01'	N01°38'47"E
C4	108.16'	1750.00	03°32'29"	108.15'	N04°35'53"W
C22	227.88'	1775.00	07°21'20"	227.72'	N02°26'32"E
C26	49.30'	1775.00	01°35'29"	49.30'	N01°00'05"E
C27	44.65'	1775.00	01°26'29"	44.65'	N00°30'54"W
C28	376.00'	1725.00	12°29'20"	375.26'	N00°07'27"W
C32	52.75'	1725.00	01°45'08"	52.75'	N00°35'17"E
C33	52.75'	1725.00	01°45'08"	52.75'	N01°09'51"W
C34	52.75'	1725.00	01°45'08"	52.75'	N02°54'59"W
C35	52.75'	1725.00	01°45'08"	52.75'	N04°40'07"W
C36	24.81'	1725.00	00°49'27"	24.81'	N05°57'24"W

CURVE TABLE

CURVE	LENGTH	RADIUS	DELTA	CHORD	BEARING
C37	38.58'	25.00	88°24'30"	34.86'	N42°58'07"W
C38	38.58'	25.00	88°24'30"	34.86'	S48°37'24"E
C39	60.40'	1775.00	01°56'59"	60.40'	N05°23'38"W
C40	8.52'	1775.00	00°16'29"	8.52'	N06°13'53"W
C41	2.35'	1775.00	00°04'33"	2.35'	N04°27'25"W
C42	79.81'	50.00	91°27'13"	71.60'	N41°26'45"E
C43	39.90'	25.00	91°27'13"	35.80'	N41°26'45"E
C44	119.71'	75.00	91°27'13"	107.40'	N41°26'45"E
C45	11.28'	75.00	08°36'59"	11.27'	N82°51'52"E
C46	36.97'	75.00	28°14'26"	36.59'	N64°26'10"E
C47	42.50'	75.00	32°28'15"	41.94'	N34°04'50"E
C48	28.96'	75.00	22°07'34"	28.78'	N06°46'56"E
C49	73.64'	2021.00	02°05'16"	73.64'	N05°19'29"W
C50	72.73'	1996.00	02°05'16"	72.73'	N05°19'29"W
C51	10.57'	1996.00	00°18'12"	10.57'	N04°25'57"W
C52	53.65'	1996.00	01°32'24"	53.65'	N05°21'15"W
C53	8.52'	1996.00	00°14'40"	8.52'	N06°14'47"W

CURVE TABLE

CURVE	LENGTH	RADIUS	DELTA	CHORD	BEARING
C54	74.55'	2046.00	02°05'16"	74.55'	N05°19'29"W
C55	18.14'	2046.00	00°30'29"	18.14'	N04°32'06"W
C56	49.39'	2046.00	01°23'00"	49.39'	N05°28'50"W
C57	7.02'	2046.00	00°11'47"	7.02'	N06°16'14"W
C58	39.27'	25.00	90°00'00"	35.36'	N51°22'07"W
C59	78.54'	50.00	90°00'00"	70.71'	N51°22'07"W
C60	117.81'	75.00	90°00'00"	106.07'	N51°22'07"W
C61	10.46'	75.00	07°59'20"	10.45'	N10°21'47"W
C62	42.50'	75.00	32°28'15"	41.94'	N30°35'35"W
C63	36.97'	75.00	28°14'26"	36.59'	N60°56'55"W
C64	27.88'	75.00	21°18'00"	27.72'	N85°43'08"W
C65	39.27'	25.00	90°00'00"	35.36'	S38°37'53"W
C66	39.27'	25.00	90°00'00"	35.36'	N51°22'07"W
C67	116.95'	1000.00	06°42'04"	116.89'	N86°58'54"E
C68	119.88'	1025.00	06°42'04"	119.81'	N86°58'54"E
C69	48.98'	1025.00	02°44'17"	48.98'	N85°00'01"E
C70	70.89'	1025.00	03°57'46"	70.88'	N88°21'03"E

CURVE TABLE

CURVE	LENGTH	RADIUS	DELTA	CHORD	BEARING
C71	62.69'	975.00	03°41'02"	62.68'	N85°28'24"E
C72	5.31'	975.00	00°18'44"	5.31'	N83°47'14"E
C73	57.38'	975.00	03°22'19"	57.37'	N85°37'46"E
C74	40.59'	25.00	93°01'01"	36.27'	S46°10'34"E
C75	53.97'	1025.00	03°01'01"	53.97'	S88°09'33"E
C76	40.59'	25.00	93°01'01"	36.27'	N46°50'27"E
C77	39.27'	25.00	90°00'00"	35.36'	N44°40'04"W
C78	39.27'	25.00	90°00'00"	35.36'	N45°19'56"W
C79	52.66'	1000.00	03°01'01"	52.65'	S88°09'33"E
C80	49.53'	1775.00	01°35'56"	49.53'	N05°17'40"W

CURVE TABLE

CURVE	LENGTH	RADIUS	DELTA	CHORD	BEARING
C118	25.60'	25.00	58°40'04"	24.49'	N60°20'02"W
C119	13.67'	25.00	31°19'56"	13.50'	N15°20'02"W

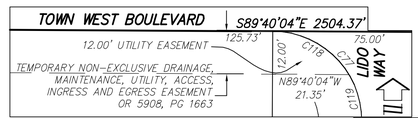

DETAIL "D": 1" = 20'

SHEET INDEX

SHEET 1 – COVER SHEET, NOTES, LEGEND/ABBREVIATIONS
SHEET 2 – KEY MAP
SHEETS 3 TO 12 – DETAIL SHEETS

Dewberry
131 WEST KALEY STREET
ORLANDO, FLORIDA 32806
PHONE: 321.354.9826 FAX: 407.648.9104
WWW.DEWBERRY.COM
CERTIFICATE OF AUTHORIZATION NO. LB 8011

WESTPORT RESERVE

LYING IN SECTIONS 13 AND 14, TOWNSHIP 16 SOUTH, RANGE 32 EAST,
CITY OF PORT ORANGE, VOLUSIA COUNTY, FLORIDA

MAP BOOK: PAGE:

0 30 60 120
1 INCH = 60 FEET

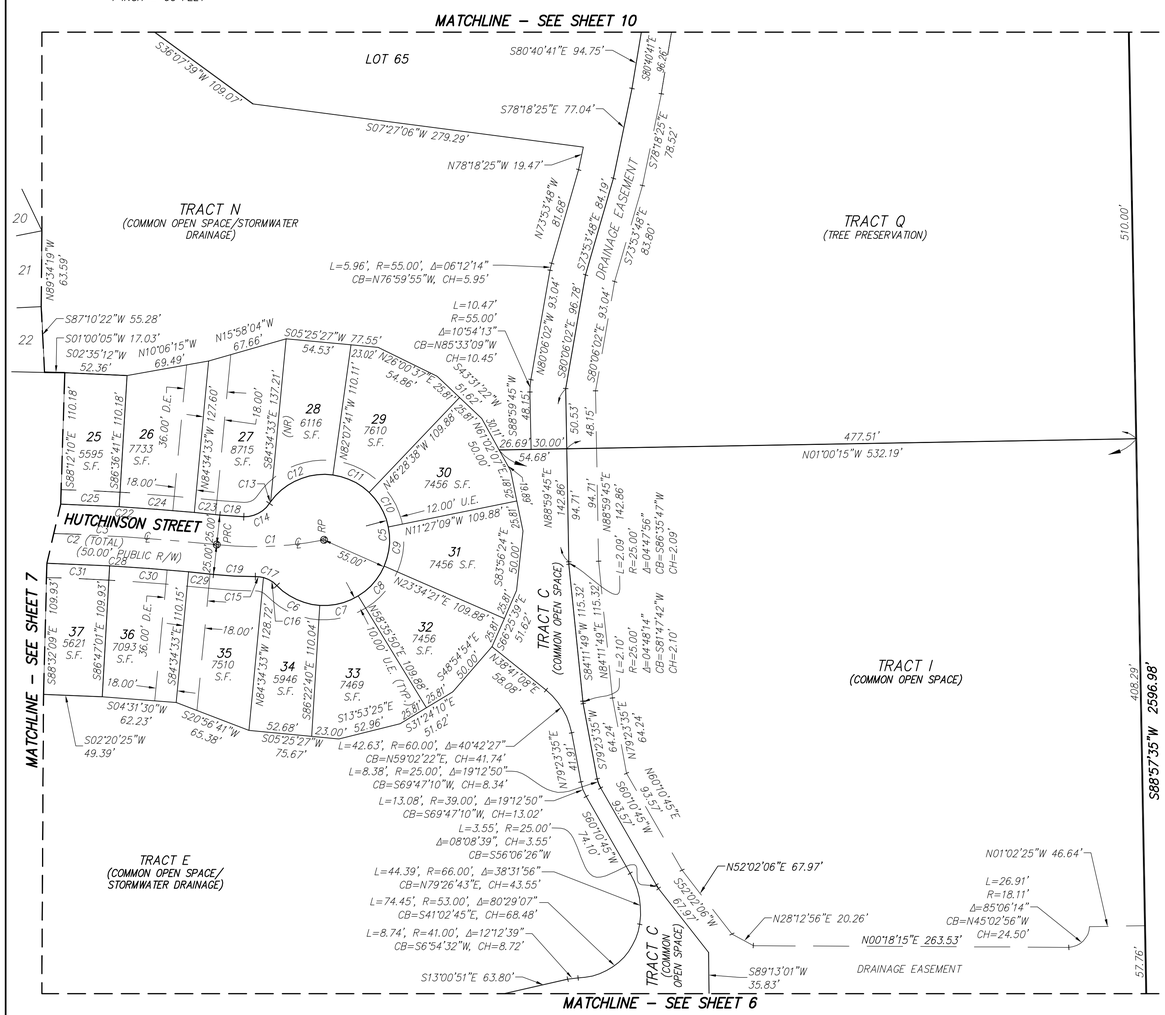

GENERAL NOTES:

1. MONUMENTATION:
   - ⊡ – DENOTES PERMANENT REFERENCE MONUMENT FOUND STAMPED AS NOTED
   - ■ – DENOTES PERMANENT REFERENCE MONUMENT SET 4"X4" CONCRETE MONUMENT STAMPED PRM LB 8011
   - ⊗ – DENOTES PERMANENT CONTROL POINT SET NAIL AND DISK STAMPED PCP LB 8011

2. ALL LINES INTERSECTING CURVES ARE RADIAL UNLESS OTHERWISE NOTED
   (R) – DENOTES A LINE RADIAL RELATIVE TO ADJACENT CURVE.
   (NR) – DENOTES A LINE NOT RADIAL RELATIVE TO ADJACENT CURVE.

3. DIMENSIONS SHOWN ARE IN FEET AND DECIMALS THEREOF.

4. ACCURACY:
   – THE BOUNDARY LINEAR ERROR OF CLOSURE DOES NOT EXCEED 1:10,000.
   – THE BOUNDARY ANGULAR ERROR OF CLOSURE DOES NOT EXCEED 15 SECONDS MULTIPLIED BY THE SQUARE ROOT OF THE NUMBER OF ANGLES TURNED.

5. BEARINGS SHOWN HEREON ARE ASSUMED AND BASED ON THE OCCUPIED SOUTH LINE OF THE SE 1/4 OF SECTION 14, TOWNSHIP 16 SOUTH, RANGE 32 EAST, VOLUSIA COUNTY, FLORIDA, HAVING A BEARING OF S88°57'35"W.

6. NOTE: ALL MEASUREMENTS REFER TO HORIZONTAL PLANE IN ACCORDANCE WITH THE DEFINITION OF THE U.S. SURVEY FOOT OR METER ADOPTED BY THE NATIONAL INSTITUTE OF STANDARDS AND TECHNOLOGY. ALL MEASUREMENTS SHALL USE THE 39.37/12=3.280833333333 EQUATION FOR CONVERSION FROM A U.S. FOOT TO METERS.

7. NOTICE: THIS PLAT, AS RECORDED IN ITS GRAPHIC FORM, IS THE OFFICIAL DEPICTION OF THE SUBDIVIDED LANDS DESCRIBED HEREIN AND WILL IN NO CIRCUMSTANCES BE SUPPLANTED IN AUTHORITY BY ANY OTHER GRAPHIC OR DIGITAL FORM OF THE PLAT. THERE MAY BE ADDITIONAL RESTRICTIONS THAT ARE NOT RECORDED ON THIS PLAT THAT MAY BE FOUND IN THE PUBLIC RECORDS OF THIS COUNTY.

8. THIS PLAT IS SUBJECT TO ALL EASEMENTS OF RECORD AND RESERVATIONS OF EASEMENTS, INCLUDING BUT NOT LIMITED TO DRAINAGE, UTILITY, AND ACCESS EASEMENTS DEDICATED OR GRANTED HEREON WHICH SHALL BE LOCATED AS FOLLOWS EXCEPT AS OTHERWISE NOTED ON THE PLAT.

ENTIRE STREET FRONTAGES OF LOTS AND COMMON OPEN SPACE AREAS: 12.00 FEET WIDE

9. UTILITIES INCLUDE BUT ARE NOT LIMITED TO SANITARY SEWER, POTABLE WATER, RECLAIMED WATER, STORM DRAINAGE, ELECTRIC, TELEPHONE, CABLE TELEVISION, SECURITY, NATURAL GAS, FIBER OPTIC, TELECOMMUNICATION.

10. ALL PLATTED UTILITY EASEMENTS, EXCLUSIVE OF PRIVATE EASEMENTS GRANTED TO OR OBTAINED BY A PARTICULAR ELECTRIC, TELEPHONE, GAS OR OTHER PUBLIC UTILITY, SHALL ALSO BE EASEMENTS FOR THE CONSTRUCTION, INSTALLATION, MAINTENANCE, AND OPERATION OF CABLE TELEVISION SERVICES; PROVIDED, HOWEVER, NO SUCH CONSTRUCTION, INSTALLATION, MAINTENANCE, AND OPERATION OF CABLE TELEVISION SERVICES SHALL INTERFERE WITH THE FACILITIES AND SERVICES OF AN ELECTRIC, TELEPHONE, GAS OR OTHER PUBLIC UTILITY. IN THE EVENT A CABLE TELEVISION COMPANY DAMAGES THE FACILITIES OF A PUBLIC UTILITY, IT SHALL BE SOLELY RESPONSIBLE FOR THE DAMAGES PURSUANT TO SECTION 177.091(28), FLORIDA STATUTES. SUCH CONSTRUCTION, INSTALLATION, MAINTENANCE AND OPERATION SHALL COMPLY WITH THE NATIONAL ELECTRICAL SAFETY CODE AS ADOPTED BY THE FLORIDA PUBLIC SERVICE COMMISSION.

11. ALL OTHER EASEMENTS ARE SUBORDINATE TO ANY CONSERVATION EASEMENTS DEDICATED HEREON. THERE SHALL BE NO REMOVAL OR DISTURBANCE OF ANY VEGETATION WITHIN SUCH CONSERVATION EASEMENTS. ANY PROPOSED CONSTRUCTION OR OTHER USE WITHIN A CONSERVATION EASEMENT MUST BE REVIEWED AND APPROVED BY THE CITY OF PORT ORANGE AND ANY OTHER AUTHORITY HAVING JURISDICTION OVER THE CONSERVATION EASEMENT.

12. BUILDING SETBACK REQUIREMENTS:
    FRONT = 25 FEET
    REAR = 20 FEET
    SIDE = LOTS ≤ 65' = 5 FEET
    LOTS > 65' = 7.5 FEET
    SIDE CORNER = 20 FEET

13. LOT COVERAGE REQUIREMENTS:
    MAXIMUM COMMON OPEN SPACE = 40%
    MAXIMUM BUILDING COVERAGE = 50%
    MAXIMUM BUILDING HEIGHT = 36 FEET

14. THE COMMON OPEN SPACE AREAS GRANTED TO THE HOMEOWNERS ASSOCIATION OF WESTPORT RESERVE, INC. BY THIS PLAT SHALL BE SUBJECT TO EASEMENTS AS SHOWN OR DESCRIBED HEREON OR GRANTED IN ACCORDANCE WITH THE HOMEOWNERS ASSOCIATION OF WESTPORT RESERVE, INC.'S COVENANTS AND RESTRICTIONS. THE GRANTING OF SUCH COMMON OPEN SPACE AREAS IS NOT INTENDED TO GRANT ANY RIGHT TO THE GENERAL PUBLIC.

15. THE HOMEOWNERS ASSOCIATION OF WESTPORT RESERVE, INC., A FLORIDA NON–PROFIT CORPORATION SHALL BE RESPONSIBLE FOR THE OPERATION AND MAINTENANCE OF THE DRAINAGE SYSTEM SERVING THE AREA WITHIN THE BOUNDARIES OF THIS PLAT, AS DEPICTED ON THE STORMWATER MANAGEMENT PLAN APPROVED FOR THE DEVELOPMENT BY THE CITY OF PORT ORANGE, FLORIDA. SHOULD THE ASSOCIATION FAIL TO PERFORM THE MAINTENANCE OF THE DRAINAGE AND STORMWATER MANAGEMENT SYSTEMS, THE CITY OF PORT ORANGE SHALL BE ENTITLED TO ENTER UPON THE COMMON OPEN SPACE AREAS AND DESIGNATED EASEMENT AREAS TO PERFORM MAINTENANCE, REPAIR OR REPLACE THE FACILITIES; AND, SHALL HAVE THE RIGHT TO LIEN ALL OWNERS OF RECORD IN PROPERTY FOR THE COST OF SUCH MAINTENANCE, REPAIR, AND REPLACEMENT, AS DEEMED BY THE CITY TO BE NECESSARY. IN THE EVENT OF TERMINATION, DISSOLUTION, OR FINAL LIQUIDATION OF THE ASSOCIATION, THE RESPONSIBILITY FOR THE OPERATION AND MAINTENANCE OF THE SURFACE WATER OR STORM WATER MANAGEMENT SYSTEM WILL BE TRANSFERRED TO AND ACCEPTED BY AN ENTITY WHICH COMPLIES WITH SECTION 40C–42.027, F.A.C. AND BE APPROVED BY THE SAINT JOHNS RIVER WATER MANAGEMENT DISTRICT PRIOR TO SUCH TERMINATION, DISSOLUTION, OR LIQUIDATION.

16. RETENTION AREAS AND COMMON OPEN SPACE AREAS ARE GRANTED AS EASEMENTS TO THE CITY OF PORT ORANGE WITH RIGHTS OF ACCESS, INGRESS, AND EGRESS, TOGETHER WITH THE RIGHT TO HARVEST EXCESS STORM WATER / GROUND WATER AS DEEMED APPROPRIATE IN THE DISCRETION OF THE CITY.

17. THE HOMEOWNERS ASSOCIATION OF WESTPORT RESERVE, INC. SHALL BE RESPONSIBLE FOR MAINTAINING ALL LANDSCAPING AND IRRIGATION IN COMMON OPEN SPACE AREAS.

18. THE ARTICLES OF INCORPORATION FOR THE HOMEOWNERS ASSOCIATION OF WESTPORT RESERVE, INC. ARE RECORDED IN OFFICIAL RECORDS BOOK ____, PAGES ____ THROUGH ____ OF THE PUBLIC RECORDS OF VOLUSIA COUNTY, FLORIDA.

19. THIS PLAT IS SUBJECT TO THE DECLARATION OF COVENANTS AND RESTRICTIONS FOR THE HOMEOWNERS ASSOCIATION OF WESTPORT RESERVE, INC. ARE RECORDED IN OFFICIAL RECORDS BOOK ____, PAGES ____ THROUGH ____, OF THE PUBLIC RECORDS OF VOLUSIA COUNTY, FLORIDA.

20. THIS PLAT SUBJECT TO THE EASEMENT AND COST SHARING AGREEMENT AS RECORDED IN OFFICIAL RECORDS BOOK ____, PAGES ____ THROUGH ____, OF THE PUBLIC RECORDS OF VOLUSIA COUNTY, FLORIDA.

21. THE ENTRY AND SIGNAGE EASEMENT SHOWN HEREON WITHIN TRACT "H" IS HEREBY GRANTED TO THE HOMEOWNERS ASSOCIATION OF WESTPORT RESERVE, INC.

SHEET INDEX

SHEET 1 – COVER SHEET, NOTES, LEGEND/ABBREVIATIONS
SHEET 2 – KEY MAP
SHEETS 3 TO 12 – DETAIL SHEETS

CURVE TABLE

CURVE	LENGTH	RADIUS	DELTA	CHORD	BEARING
C1	90.43'	300.00	17°16'15"	90.09'	S02°30'55"E
C2	381.45'	1750.00	12°29'20"	380.70'	N00°07'27"W
C3	273.29'	1750.00	08°56'51"	273.01'	N01°38'47"E
C5	270.83'	55.00	282°07'48"	69.13'	N84°50'42"E
C6	40.59'	55.00	42°17'16"	39.58'	S24°45'58"W
C7	33.62'	55.00	35°01'30"	33.10'	S13°53'25"E
C8	33.62'	55.00	35°01'30"	33.10'	S48°54'54"E
C9	33.62'	55.00	35°01'30"	33.10'	S83°56'24"E
C10	33.62'	55.00	35°01'30"	33.10'	N61°02'07"E
C11	34.22'	55.00	35°39'02"	33.67'	N25°41'51"E
C12	59.66'	55.00	62°08'54"	56.78'	N23°12'08"W
C13	1.87'	55.00	01°56'37"	1.87'	N55°14'53"W
C14	25.38'	25.00	58°09'48"	24.30'	S27°08'18"E

CURVE TABLE

CURVE	LENGTH	RADIUS	DELTA	CHORD	BEARING
C15	6.88'	25.00	15°46'40"	6.86'	N07°47'52"E
C16	13.19'	25.00	30°13'24"	13.04'	N30°47'55"E
C17	20.07'	25.00	46°00'04"	19.54'	S22°54'34"E
C18	20.05'	275.00	04°10'37"	20.04'	S04°01'55"W
C19	35.23'	325.00	06°12'41"	35.22'	S03°00'53"W
C22	227.88'	1775.00	07°21'20"	227.72'	N02°26'32"E
C23	21.57'	1775.00	00°41'46"	21.57'	N05°46'20"E
C24	63.06'	1775.00	02°02'07"	63.05'	N04°24'23"E
C25	49.30'	1775.00	01°35'29"	49.30'	N02°35'35"E
C28	376.00'	1725.00	12°29'20"	375.26'	N00°07'27"W
C29	26.76'	1725.00	00°53'20"	26.76'	N05°40'33"E
C30	60.67'	1725.00	02°00'54"	60.66'	N04°13'26"E
C31	52.75'	1725.00	01°45'08"	52.75'	N02°20'25"E

Dewberry
131 WEST KALEY STREET
ORLANDO, FLORIDA 32806
PHONE: 321.354.9826 FAX: 407.648.9104
WWW.DEWBERRY.COM
CERTIFICATE OF AUTHORIZATION NO. LB 8011

WESTPORT RESERVE

LYING IN SECTIONS 13 AND 14, TOWNSHIP 16 SOUTH, RANGE 32 EAST,
CITY OF PORT ORANGE, VOLUSIA COUNTY, FLORIDA

MAP BOOK: PAGE:

0 30 60 120

1 INCH = 60 FEET

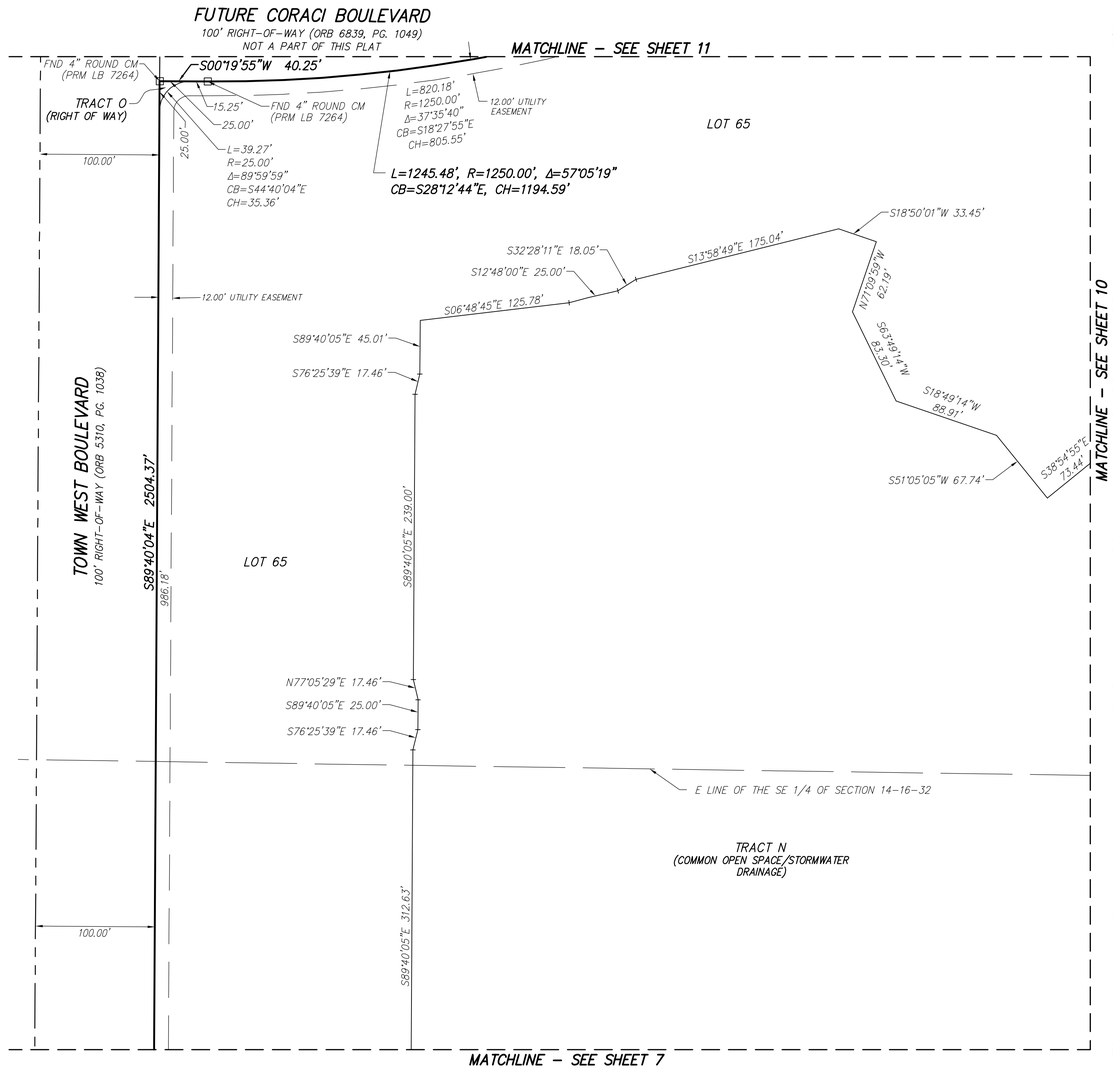

GENERAL NOTES:

1. MONUMENTATION:
   - ⊡ – DENOTES PERMANENT REFERENCE MONUMENT FOUND STAMPED AS NOTED
   - ■ – DENOTES PERMANENT REFERENCE MONUMENT SET 4"X4" CONCRETE MONUMENT STAMPED PRM LB 8011
   - ◎ – DENOTES PERMANENT CONTROL POINT SET NAIL AND DISK STAMPED PCP LB 8011

2. ALL LINES INTERSECTING CURVES ARE RADIAL UNLESS OTHERWISE NOTED
   (R) – DENOTES A LINE RADIAL RELATIVE TO ADJACENT CURVE.
   (NR) – DENOTES A LINE NOT RADIAL RELATIVE TO ADJACENT CURVE.

3. DIMENSIONS SHOWN ARE IN FEET AND DECIMALS THEREOF.

4. ACCURACY:
   - THE BOUNDARY LINEAR ERROR OF CLOSURE DOES NOT EXCEED 1:10,000.
   - THE BOUNDARY ANGULAR ERROR OF CLOSURE DOES NOT EXCEED 15 SECONDS MULTIPLIED BY THE SQUARE ROOT OF THE NUMBER OF ANGLES TURNED.

5. BEARINGS SHOWN HEREON ARE ASSUMED AND BASED ON THE OCCUPIED SOUTH LINE OF THE SE 1/4 OF SECTION 14, TOWNSHIP 16 SOUTH, RANGE 32 EAST, VOLUSIA COUNTY, FLORIDA, HAVING A BEARING OF S88°57'35"W.

6. NOTE: ALL MEASUREMENTS REFER TO HORIZONTAL PLANE IN ACCORDANCE WITH THE DEFINITION OF THE U.S. SURVEY FOOT OR METER ADOPTED BY THE NATIONAL INSTITUTE OF STANDARDS AND TECHNOLOGY. ALL MEASUREMENTS SHALL USE THE 39.37/12=3.28083333333 EQUATION FOR CONVERSION FROM A U.S. FOOT TO METERS.

7. NOTICE: THIS PLAT, AS RECORDED IN ITS GRAPHIC FORM, IS THE OFFICIAL DEPICTION OF THE SUBDIVIDED LANDS DESCRIBED HEREIN AND WILL IN NO CIRCUMSTANCES BE SUPPLANTED IN AUTHORITY BY ANY OTHER GRAPHIC OR DIGITAL FORM OF THE PLAT. THERE MAY BE ADDITIONAL RESTRICTIONS THAT ARE NOT RECORDED ON THIS PLAT THAT MAY BE FOUND IN THE PUBLIC RECORDS OF THIS COUNTY.

8. THIS PLAT IS SUBJECT TO ALL EASEMENTS OF RECORD AND RESERVATIONS OF EASEMENTS, INCLUDING BUT NOT LIMITED TO DRAINAGE, UTILITY, AND ACCESS EASEMENTS DEDICATED OR GRANTED HEREON WHICH SHALL BE LOCATED AS FOLLOWS EXCEPT AS OTHERWISE NOTED ON THE PLAT:

ENTIRE STREET FRONTAGES OF LOTS AND COMMON OPEN SPACE AREAS: 12.00 FEET WIDE

9. UTILITIES INCLUDE BUT ARE NOT LIMITED TO SANITARY SEWER, POTABLE WATER, RECLAIMED WATER, STORM DRAINAGE, ELECTRIC, TELEPHONE, CABLE TELEVISION, SECURITY, NATURAL GAS, FIBER OPTIC, TELECOMMUNICATION.

10. ALL PLATTED UTILITY EASEMENTS, EXCLUSIVE OF PRIVATE EASEMENTS GRANTED TO OR OBTAINED BY A PARTICULAR ELECTRIC, TELEPHONE, GAS OR OTHER PUBLIC UTILITY, SHALL ALSO BE EASEMENTS FOR THE CONSTRUCTION, INSTALLATION, MAINTENANCE, AND OPERATION OF CABLE TELEVISION SERVICES; PROVIDED, HOWEVER, NO SUCH CONSTRUCTION, INSTALLATION, MAINTENANCE, AND OPERATION OF CABLE TELEVISION SERVICES SHALL INTERFERE WITH THE FACILITIES AND SERVICES OF AN ELECTRIC, TELEPHONE, GAS OR OTHER PUBLIC UTILITY. IN THE EVENT A CABLE TELEVISION COMPANY DAMAGES THE FACILITIES OF A PUBLIC UTILITY, IT SHALL BE SOLELY RESPONSIBLE FOR THE DAMAGES PURSUANT TO SECTION 177.091(28), FLORIDA STATUTES. SUCH CONSTRUCTION, INSTALLATION, MAINTENANCE AND OPERATION SHALL COMPLY WITH THE NATIONAL ELECTRICAL SAFETY CODE AS ADOPTED BY THE FLORIDA PUBLIC SERVICE COMMISSION.

11. ALL OTHER EASEMENTS ARE SUBORDINATE TO ANY CONSERVATION EASEMENTS DEDICATED HEREON. THERE SHALL BE NO REMOVAL OR DISTURBANCE OF ANY VEGETATION WITHIN SUCH CONSERVATION EASEMENTS. ANY PROPOSED CONSTRUCTION OR OTHER USE WITHIN A CONSERVATION EASEMENT MUST BE REVIEWED AND APPROVED BY THE CITY OF PORT ORANGE AND ANY OTHER AUTHORITY HAVING JURISDICTION OVER THE CONSERVATION EASEMENT.

12. BUILDING SETBACK REQUIREMENTS:
    FRONT = 25 FEET
    REAR = 20 FEET
    SIDE = LOTS ≤ 65' = 5 FEET
    LOTS > 65' = 7.5 FEET
    SIDE CORNER = 20 FEET

13. LOT COVERAGE REQUIREMENTS:
    MAXIMUM COMMON OPEN SPACE = 40%
    MAXIMUM BUILDING COVERAGE = 50%
    MAXIMUM BUILDING HEIGHT = 36 FEET

14. THE COMMON OPEN SPACE AREAS GRANTED TO THE HOMEOWNERS ASSOCIATION OF WESTPORT RESERVE, INC. BY THIS PLAT SHALL BE SUBJECT TO EASEMENTS AS SHOWN OR DESCRIBED HEREON OR GRANTED IN ACCORDANCE WITH THE HOMEOWNERS ASSOCIATION OF WESTPORT RESERVE, INC.'S COVENANTS AND RESTRICTIONS. THE GRANTING OF SUCH COMMON OPEN SPACE AREAS IS NOT INTENDED TO GRANT ANY RIGHT TO THE GENERAL PUBLIC.

15. THE HOMEOWNERS ASSOCIATION OF WESTPORT RESERVE, INC., A FLORIDA NON-PROFIT CORPORATION SHALL BE RESPONSIBLE FOR THE OPERATION AND MAINTENANCE OF THE DRAINAGE SYSTEM SERVING THE AREA WITHIN THE BOUNDARIES OF THIS PLAT, AS DEPICTED ON THE STORMWATER MANAGEMENT PLAN APPROVED FOR THE DEVELOPMENT BY THE CITY OF PORT ORANGE, FLORIDA. SHOULD THE ASSOCIATION FAIL TO PERFORM THE MAINTENANCE OF THE DRAINAGE AND STORMWATER MANAGEMENT SYSTEMS, THE CITY OF PORT ORANGE SHALL BE ENTITLED TO ENTER UPON THE COMMON OPEN SPACE AREAS AND DESIGNATED EASEMENT AREAS TO PERFORM MAINTENANCE, REPAIR OR REPLACE THE FACILITIES; AND, SHALL HAVE THE RIGHT TO LIEN ALL OWNERS OF RECORD IN PROPERTY FOR THE COST OF SUCH MAINTENANCE, REPAIR, AND REPLACEMENT, AS DEEMED BY THE CITY TO BE NECESSARY. IN THE EVENT OF TERMINATION, DISSOLUTION, OR FINAL LIQUIDATION OF THE ASSOCIATION, THE RESPONSIBILITY FOR THE OPERATION AND MAINTENANCE OF THE SURFACE WATER OR STORM WATER MANAGEMENT SYSTEM WILL BE TRANSFERRED TO AND ACCEPTED BY AN ENTITY WHICH COMPLIES WITH SECTION 40C-42.027, F.A.C. AND BE APPROVED BY THE SAINT JOHNS RIVER WATER MANAGEMENT DISTRICT PRIOR TO SUCH TERMINATION, DISSOLUTION, OR LIQUIDATION.

16. RETENTION AREAS AND COMMON OPEN SPACE AREAS ARE GRANTED AS EASEMENTS TO THE CITY OF PORT ORANGE WITH RIGHTS OF ACCESS, INGRESS, AND EGRESS, TOGETHER WITH THE RIGHT TO HARVEST EXCESS STORM WATER / GROUND WATER AS DEEMED APPROPRIATE IN THE DISCRETION OF THE CITY.

17. THE HOMEOWNERS ASSOCIATION OF WESTPORT RESERVE, INC. SHALL BE RESPONSIBLE FOR MAINTAINING ALL LANDSCAPING AND IRRIGATION IN COMMON OPEN SPACE AREAS.

18. THE ARTICLES OF INCORPORATION FOR THE HOMEOWNERS ASSOCIATION OF WESTPORT RESERVE, INC. ARE RECORDED IN OFFICIAL RECORDS BOOK _____, PAGES _____ THROUGH _____ OF THE PUBLIC RECORDS OF VOLUSIA COUNTY, FLORIDA.

19. THIS PLAT IS SUBJECT TO THE DECLARATION OF COVENANTS AND RESTRICTIONS FOR THE HOMEOWNERS ASSOCIATION OF WESTPORT RESERVE, INC. ARE RECORDED IN OFFICIAL RECORDS BOOK _____, PAGES _____ THROUGH _____, OF THE PUBLIC RECORDS OF VOLUSIA COUNTY, FLORIDA.

20. THIS PLAT SUBJECT TO THE EASEMENT AND COST SHARING AGREEMENT AS RECORDED IN OFFICIAL RECORDS BOOK _____, PAGES _____ THROUGH _____, OF THE PUBLIC RECORDS OF VOLUSIA COUNTY, FLORIDA.

21. THE ENTRY AND SIGNAGE EASEMENT SHOWN HEREON WITHIN TRACT "H" IS HEREBY GRANTED TO THE HOMEOWNERS ASSOCIATION OF WESTPORT RESERVE, INC.

SHEET INDEX

SHEET 1 – COVER SHEET, NOTES, LEGEND/ABBREVIATIONS
SHEET 2 – KEY MAP
SHEETS 3 TO 12 – DETAIL SHEETS

Dewberry
131 WEST KALEY STREET
ORLANDO, FLORIDA 32806
PHONE: 321.354.9826 FAX: 407.648.9104
WWW.DEWBERRY.COM
CERTIFICATE OF AUTHORIZATION NO. LB 8011

WESTPORT RESERVE

LYING IN SECTIONS 13 AND 14, TOWNSHIP 16 SOUTH, RANGE 32 EAST,
CITY OF PORT ORANGE, VOLUSIA COUNTY, FLORIDA

MAP BOOK: PAGE:

0 30 60 120
1 INCH = 60 FEET

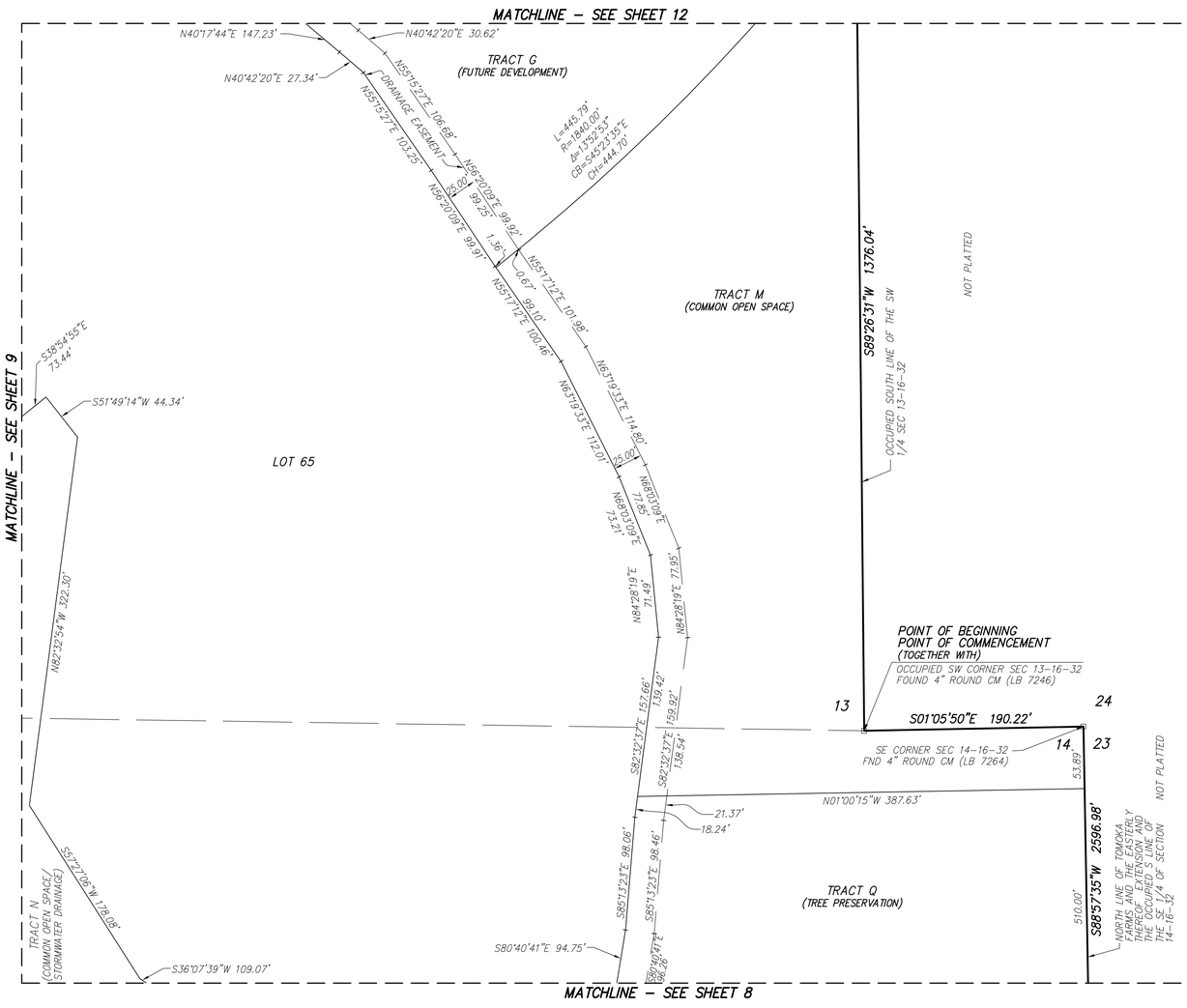

GENERAL NOTES:

1. MONUMENTATION:
   - ⊡ – DENOTES PERMANENT REFERENCE MONUMENT FOUND STAMPED AS NOTED
   - ■ – DENOTES PERMANENT REFERENCE MONUMENT SET 4"X4" CONCRETE MONUMENT STAMPED PRM LB 8011
   - ⊛ – DENOTES PERMANENT CONTROL POINT SET NAIL AND DISK STAMPED PCP LB 8011

2. ALL LINES INTERSECTING CURVES ARE RADIAL UNLESS OTHERWISE NOTED
   (R) – DENOTES A LINE RADIAL RELATIVE TO ADJACENT CURVE.
   (NR) – DENOTES A LINE NOT RADIAL RELATIVE TO ADJACENT CURVE.

3. DIMENSIONS SHOWN ARE IN FEET AND DECIMALS THEREOF.

4. ACCURACY:
   – THE BOUNDARY LINEAR ERROR OF CLOSURE DOES NOT EXCEED 1:10,000.
   – THE BOUNDARY ANGULAR ERROR OF CLOSURE DOES NOT EXCEED 15 SECONDS MULTIPLIED BY THE SQUARE ROOT OF THE NUMBER OF ANGLES TURNED.

5. BEARINGS SHOWN HEREON ARE ASSUMED AND BASED ON THE OCCUPIED SOUTH LINE OF THE SE 1/4 OF SECTION 14, TOWNSHIP 16 SOUTH, RANGE 32 EAST, VOLUSIA COUNTY, FLORIDA, HAVING A BEARING OF S88°57'35"W.

6. NOTE: ALL MEASUREMENTS REFER TO HORIZONTAL PLANE IN ACCORDANCE WITH THE DEFINITION OF THE U.S. SURVEY FOOT OR METER ADOPTED BY THE NATIONAL INSTITUTE OF STANDARDS AND TECHNOLOGY. ALL MEASUREMENTS SHALL USE THE 39.37/12=3.28083333333 EQUATION FOR CONVERSION FROM A U.S. FOOT TO METERS.

7. NOTICE: THIS PLAT, AS RECORDED IN ITS GRAPHIC FORM, IS THE OFFICIAL DEPICTION OF THE SUBDIVIDED LANDS DESCRIBED HEREIN AND WILL IN NO CIRCUMSTANCES BE SUPPLANTED IN AUTHORITY BY ANY OTHER GRAPHIC OR DIGITAL FORM OF THE PLAT. THERE MAY BE ADDITIONAL RESTRICTIONS THAT ARE NOT RECORDED ON THIS PLAT THAT MAY BE FOUND IN THE PUBLIC RECORDS OF THIS COUNTY.

8. THIS PLAT IS SUBJECT TO ALL EASEMENTS OF RECORD AND RESERVATIONS OF EASEMENTS, INCLUDING BUT NOT LIMITED TO DRAINAGE, UTILITY, AND ACCESS EASEMENTS DEDICATED OR GRANTED HEREON WHICH SHALL BE LOCATED AS FOLLOWS EXCEPT AS OTHERWISE NOTED ON THE PLAT:

   ENTIRE STREET FRONTAGES OF LOTS AND COMMON OPEN SPACE AREAS: 12.00 FEET WIDE

9. UTILITIES INCLUDE BUT ARE NOT LIMITED TO SANITARY SEWER, POTABLE WATER, RECLAIMED WATER, STORM DRAINAGE, ELECTRIC, TELEPHONE, CABLE TELEVISION, SECURITY, NATURAL GAS, FIBER OPTIC, TELECOMMUNICATION.

10. ALL PLATTED UTILITY EASEMENTS, EXCLUSIVE OF PRIVATE EASEMENTS GRANTED TO OR OBTAINED BY A PARTICULAR ELECTRIC, TELEPHONE, GAS OR OTHER PUBLIC UTILITY, SHALL ALSO BE EASEMENTS FOR THE CONSTRUCTION, INSTALLATION, MAINTENANCE, AND OPERATION OF CABLE TELEVISION SERVICES; PROVIDED, HOWEVER, NO SUCH CONSTRUCTION, INSTALLATION, MAINTENANCE, AND OPERATION OF CABLE TELEVISION SERVICES SHALL INTERFERE WITH THE FACILITIES AND SERVICES OF AN ELECTRIC, TELEPHONE, GAS OR OTHER PUBLIC UTILITY. IN THE EVENT A CABLE TELEVISION COMPANY DAMAGES THE FACILITIES OF A PUBLIC UTILITY, IT SHALL BE SOLELY RESPONSIBLE FOR THE DAMAGES PURSUANT TO SECTION 177.091(28), FLORIDA STATUTES. SUCH CONSTRUCTION, INSTALLATION, MAINTENANCE AND OPERATION SHALL COMPLY WITH THE NATIONAL ELECTRICAL SAFETY CODE AS ADOPTED BY THE FLORIDA PUBLIC SERVICE COMMISSION.

11. ALL OTHER EASEMENTS ARE SUBORDINATE TO ANY CONSERVATION EASEMENTS DEDICATED HEREON. THERE SHALL BE NO REMOVAL OR DISTURBANCE OF ANY VEGETATION WITHIN SUCH CONSERVATION EASEMENTS. ANY PROPOSED CONSTRUCTION OR OTHER USE WITHIN A CONSERVATION EASEMENT MUST BE REVIEWED AND APPROVED BY THE CITY OF PORT ORANGE AND ANY OTHER AUTHORITY HAVING JURISDICTION OVER THE CONSERVATION EASEMENT.

12. BUILDING SETBACK REQUIREMENTS:
    FRONT = 25 FEET
    REAR = 20 FEET
    SIDE = LOTS ≤ 65' = 5 FEET
    LOTS > 65' = 7.5 FEET
    SIDE CORNER = 20 FEET

13. LOT COVERAGE REQUIREMENTS:
    MAXIMUM COMMON OPEN SPACE = 40%
    MAXIMUM BUILDING COVERAGE = 50%
    MAXIMUM BUILDING HEIGHT = 36 FEET

14. THE COMMON OPEN SPACE AREAS GRANTED TO THE HOMEOWNERS ASSOCIATION OF WESTPORT RESERVE, INC. BY THIS PLAT SHALL BE SUBJECT TO EASEMENTS AS SHOWN OR DESCRIBED HEREON OR GRANTED IN ACCORDANCE WITH THE HOMEOWNERS ASSOCIATION OF WESTPORT RESERVE, INC.'S COVENANTS AND RESTRICTIONS. THE GRANTING OF SUCH COMMON OPEN SPACE AREAS IS NOT INTENDED TO GRANT ANY RIGHT TO THE GENERAL PUBLIC.

15. THE HOMEOWNERS ASSOCIATION OF WESTPORT RESERVE, INC., A FLORIDA NON-PROFIT CORPORATION SHALL BE RESPONSIBLE FOR THE OPERATION AND MAINTENANCE OF THE DRAINAGE SYSTEM SERVING THE AREA WITHIN THE BOUNDARIES OF THIS PLAT, AS DEPICTED ON THE STORMWATER MANAGEMENT PLAN APPROVED FOR THE DEVELOPMENT BY THE CITY OF PORT ORANGE, FLORIDA. SHOULD THE ASSOCIATION FAIL TO PERFORM THE MAINTENANCE OF THE DRAINAGE AND STORMWATER MANAGEMENT SYSTEMS, THE CITY OF PORT ORANGE SHALL BE ENTITLED TO ENTER UPON THE COMMON OPEN SPACE AREAS AND DESIGNATED EASEMENT AREAS TO PERFORM MAINTENANCE, REPAIR OR REPLACE THE FACILITIES; AND, SHALL HAVE THE RIGHT TO LIEN ALL OWNERS OF RECORD IN PROPERTY FOR THE COST OF SUCH MAINTENANCE, REPAIR, AND REPLACEMENT, AS DEEMED BY THE CITY TO BE NECESSARY. IN THE EVENT OF TERMINATION, DISSOLUTION, OR FINAL LIQUIDATION OF THE ASSOCIATION, THE RESPONSIBILITY FOR THE OPERATION AND MAINTENANCE OF THE SURFACE WATER OR STORM WATER MANAGEMENT SYSTEM WILL BE TRANSFERRED TO AND ACCEPTED BY AN ENTITY WHICH COMPLIES WITH SECTION 40C-42.027, F.A.C. AND BE APPROVED BY THE SAINT JOHNS RIVER WATER MANAGEMENT DISTRICT PRIOR TO SUCH TERMINATION, DISSOLUTION, OR LIQUIDATION.

16. RETENTION AREAS AND COMMON OPEN SPACE AREAS ARE GRANTED AS EASEMENTS TO THE CITY OF PORT ORANGE WITH RIGHTS OF ACCESS, INGRESS, AND EGRESS, TOGETHER WITH THE RIGHT TO HARVEST EXCESS STORM WATER / GROUND WATER AS DEEMED APPROPRIATE IN THE DISCRETION OF THE CITY.

17. THE HOMEOWNERS ASSOCIATION OF WESTPORT RESERVE, INC. SHALL BE RESPONSIBLE FOR MAINTAINING ALL LANDSCAPING AND IRRIGATION IN COMMON OPEN SPACE AREAS.

18. THE ARTICLES OF INCORPORATION FOR THE HOMEOWNERS ASSOCIATION OF WESTPORT RESERVE, INC. ARE RECORDED IN OFFICIAL RECORDS BOOK _____, PAGES _____ THROUGH _____ OF THE PUBLIC RECORDS OF VOLUSIA COUNTY, FLORIDA.

19. THIS PLAT IS SUBJECT TO THE DECLARATION OF COVENANTS AND RESTRICTIONS FOR THE HOMEOWNERS ASSOCIATION OF WESTPORT RESERVE, INC. ARE RECORDED IN OFFICIAL RECORDS BOOK _____, PAGES _____ THROUGH _____, OF THE PUBLIC RECORDS OF VOLUSIA COUNTY, FLORIDA.

20. THIS PLAT SUBJECT TO THE EASEMENT AND COST SHARING AGREEMENT AS RECORDED IN OFFICIAL RECORDS BOOK _____, PAGES _____ THROUGH _____, OF THE PUBLIC RECORDS OF VOLUSIA COUNTY, FLORIDA.

21. THE ENTRY AND SIGNAGE EASEMENT SHOWN HEREON WITHIN TRACT "H" IS HEREBY GRANTED TO THE HOMEOWNERS ASSOCIATION OF WESTPORT RESERVE, INC.

SHEET INDEX

SHEET 1 – COVER SHEET, NOTES, LEGEND/ABBREVIATIONS
SHEET 2 – KEY MAP
SHEETS 3 TO 12 – DETAIL SHEETS

Dewberry
131 WEST KALEY STREET
ORLANDO, FLORIDA 32806
PHONE: 321.354.9826 FAX: 407.648.9104
WWW.DEWBERRY.COM
CERTIFICATE OF AUTHORIZATION NO. LB 8011

WESTPORT RESERVE

LYING IN SECTIONS 13 AND 14, TOWNSHIP 16 SOUTH, RANGE 32 EAST,
CITY OF PORT ORANGE, VOLUSIA COUNTY, FLORIDA

MAP BOOK: PAGE:

0 30 60 120

1 INCH = 60 FEET

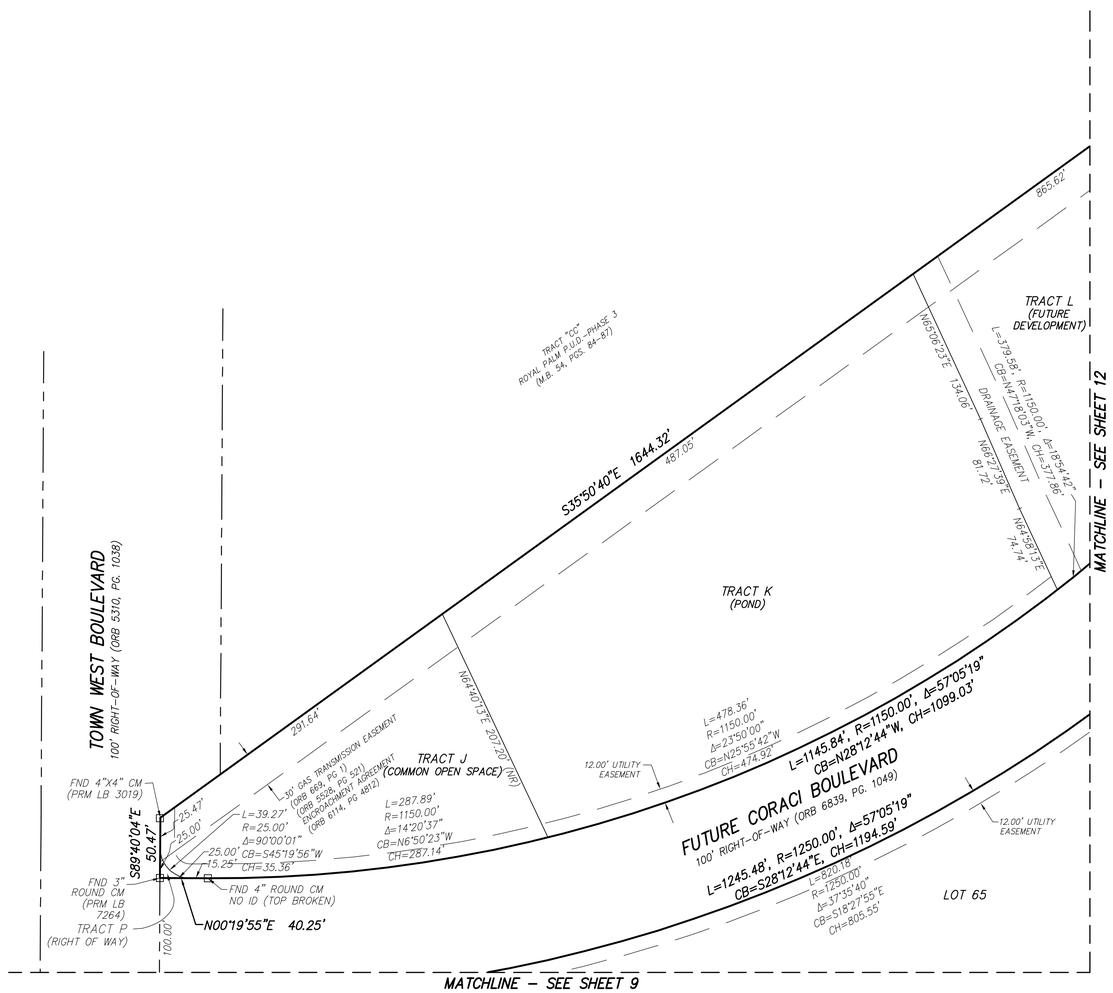

GENERAL NOTES:

1. MONUMENTATION:
   - ⊡ – DENOTES PERMANENT REFERENCE MONUMENT FOUND STAMPED AS NOTED
   - ■ – DENOTES PERMANENT REFERENCE MONUMENT SET 4"X4" CONCRETE MONUMENT STAMPED PRM LB 8011
   - ◎ – DENOTES PERMANENT CONTROL POINT SET NAIL AND DISK STAMPED PCP LB 8011

2. ALL LINES INTERSECTING CURVES ARE RADIAL UNLESS OTHERWISE NOTED
   (R) – DENOTES A LINE RADIAL RELATIVE TO ADJACENT CURVE.
   (NR) – DENOTES A LINE NOT RADIAL RELATIVE TO ADJACENT CURVE.

3. DIMENSIONS SHOWN ARE IN FEET AND DECIMALS THEREOF.

4. ACCURACY:
   – THE BOUNDARY LINEAR ERROR OF CLOSURE DOES NOT EXCEED 1:10,000.
   – THE BOUNDARY ANGULAR ERROR OF CLOSURE DOES NOT EXCEED 15 SECONDS MULTIPLIED BY THE SQUARE ROOT OF THE NUMBER OF ANGLES TURNED.

5. BEARINGS SHOWN HEREON ARE ASSUMED AND BASED ON THE OCCUPIED SOUTH LINE OF THE SE 1/4 OF SECTION 14, TOWNSHIP 16 SOUTH, RANGE 32 EAST, VOLUSIA COUNTY, FLORIDA, HAVING A BEARING OF S88°57'35"W.

6. NOTE: ALL MEASUREMENTS REFER TO HORIZONTAL PLANE IN ACCORDANCE WITH THE DEFINITION OF THE U.S. SURVEY FOOT OR METER ADOPTED BY THE NATIONAL INSTITUTE OF STANDARDS AND TECHNOLOGY. ALL MEASUREMENTS SHALL USE THE 39.37/12=3.28083333333 EQUATION FOR CONVERSION FROM A U.S. FOOT TO METERS.

7. NOTICE: THIS PLAT, AS RECORDED IN ITS GRAPHIC FORM, IS THE OFFICIAL DEPICTION OF THE SUBDIVIDED LANDS DESCRIBED HEREIN AND WILL IN NO CIRCUMSTANCES BE SUPPLANTED IN AUTHORITY BY ANY OTHER GRAPHIC OR DIGITAL FORM OF THE PLAT. THERE MAY BE ADDITIONAL RESTRICTIONS THAT ARE NOT RECORDED ON THIS PLAT THAT MAY BE FOUND IN THE PUBLIC RECORDS OF THIS COUNTY.

8. THIS PLAT IS SUBJECT TO ALL EASEMENTS OF RECORD AND RESERVATIONS OF EASEMENTS, INCLUDING BUT NOT LIMITED TO DRAINAGE, UTILITY, AND ACCESS EASEMENTS DEDICATED OR GRANTED HEREON WHICH SHALL BE LOCATED AS FOLLOWS EXCEPT AS OTHERWISE NOTED ON THE PLAT:

ENTIRE STREET FRONTAGES OF LOTS AND COMMON OPEN SPACE AREAS: 12.00 FEET WIDE

9. UTILITIES INCLUDE BUT ARE NOT LIMITED TO SANITARY SEWER, POTABLE WATER, RECLAIMED WATER, STORM DRAINAGE, ELECTRIC, TELEPHONE, CABLE TELEVISION, SECURITY, NATURAL GAS, FIBER OPTIC, TELECOMMUNICATION.

10. ALL PLATTED UTILITY EASEMENTS, EXCLUSIVE OF PRIVATE EASEMENTS GRANTED TO OR OBTAINED BY A PARTICULAR ELECTRIC, TELEPHONE, GAS OR OTHER PUBLIC UTILITY, SHALL ALSO BE EASEMENTS FOR THE CONSTRUCTION, INSTALLATION, MAINTENANCE, AND OPERATION OF CABLE TELEVISION SERVICES; PROVIDED, HOWEVER, NO SUCH CONSTRUCTION, INSTALLATION, MAINTENANCE, AND OPERATION OF CABLE TELEVISION SERVICES SHALL INTERFERE WITH THE FACILITIES AND SERVICES OF AN ELECTRIC, TELEPHONE, GAS OR OTHER PUBLIC UTILITY. IN THE EVENT A CABLE TELEVISION COMPANY DAMAGES THE FACILITIES OF A PUBLIC UTILITY, IT SHALL BE SOLELY RESPONSIBLE FOR THE DAMAGES PURSUANT TO SECTION 177.091(28), FLORIDA STATUTES. SUCH CONSTRUCTION, INSTALLATION, MAINTENANCE AND OPERATION SHALL COMPLY WITH THE NATIONAL ELECTRICAL SAFETY CODE AS ADOPTED BY THE FLORIDA PUBLIC SERVICE COMMISSION.

11. ALL OTHER EASEMENTS ARE SUBORDINATE TO ANY CONSERVATION EASEMENTS DEDICATED HEREON. THERE SHALL BE NO REMOVAL OR DISTURBANCE OF ANY VEGETATION WITHIN SUCH CONSERVATION EASEMENTS. ANY PROPOSED CONSTRUCTION OR OTHER USE WITHIN A CONSERVATION EASEMENT MUST BE REVIEWED AND APPROVED BY THE CITY OF PORT ORANGE AND ANY OTHER AUTHORITY HAVING JURISDICTION OVER THE CONSERVATION EASEMENT.

12. BUILDING SETBACK REQUIREMENTS:
    FRONT = 25 FEET
    REAR = 20 FEET
    SIDE = LOTS ≤ 65' = 5 FEET
    LOTS > 65' = 7.5 FEET
    SIDE CORNER = 20 FEET

13. LOT COVERAGE REQUIREMENTS:
    MAXIMUM COMMON OPEN SPACE = 40%
    MAXIMUM BUILDING COVERAGE = 50%
    MAXIMUM BUILDING HEIGHT = 36 FEET

14. THE COMMON OPEN SPACE AREAS GRANTED TO THE HOMEOWNERS ASSOCIATION OF WESTPORT RESERVE, INC. BY THIS PLAT SHALL BE SUBJECT TO EASEMENTS AS SHOWN OR DESCRIBED HEREON OR GRANTED IN ACCORDANCE WITH THE HOMEOWNERS ASSOCIATION OF WESTPORT RESERVE, INC.'S COVENANTS AND RESTRICTIONS. THE GRANTING OF SUCH COMMON OPEN SPACE AREAS IS NOT INTENDED TO GRANT ANY RIGHT TO THE GENERAL PUBLIC.

15. THE HOMEOWNERS ASSOCIATION OF WESTPORT RESERVE, INC., A FLORIDA NON-PROFIT CORPORATION SHALL BE RESPONSIBLE FOR THE OPERATION AND MAINTENANCE OF THE DRAINAGE SYSTEM SERVING THE AREA WITHIN THE BOUNDARIES OF THIS PLAT, AS DEPICTED ON THE STORMWATER MANAGEMENT PLAN APPROVED FOR THE DEVELOPMENT BY THE CITY OF PORT ORANGE, FLORIDA. SHOULD THE ASSOCIATION FAIL TO PERFORM THE MAINTENANCE OF THE DRAINAGE AND STORMWATER MANAGEMENT SYSTEMS, THE CITY OF PORT ORANGE SHALL BE ENTITLED TO ENTER UPON THE COMMON OPEN SPACE AREAS AND DESIGNATED EASEMENT AREAS TO PERFORM MAINTENANCE, REPAIR OR REPLACE THE FACILITIES; AND, SHALL HAVE THE RIGHT TO LIEN ALL OWNERS OF RECORD IN PROPERTY FOR THE COST OF SUCH MAINTENANCE, REPAIR, AND REPLACEMENT, AS DEEMED BY THE CITY TO BE NECESSARY. IN THE EVENT OF TERMINATION, DISSOLUTION, OR FINAL LIQUIDATION OF THE ASSOCIATION, THE RESPONSIBILITY FOR THE OPERATION AND MAINTENANCE OF THE SURFACE WATER OR STORM WATER MANAGEMENT SYSTEM WILL BE TRANSFERRED TO AND ACCEPTED BY AN ENTITY WHICH COMPLIES WITH SECTION 40C-42.027, F.A.C. AND BE APPROVED BY THE SAINT JOHNS RIVER WATER MANAGEMENT DISTRICT PRIOR TO SUCH TERMINATION, DISSOLUTION, OR LIQUIDATION.

16. RETENTION AREAS AND COMMON OPEN SPACE AREAS ARE GRANTED AS EASEMENTS TO THE CITY OF PORT ORANGE WITH RIGHTS OF ACCESS, INGRESS, AND EGRESS, TOGETHER WITH THE RIGHT TO HARVEST EXCESS STORM WATER / GROUND WATER AS DEEMED APPROPRIATE IN THE DISCRETION OF THE CITY.

17. THE HOMEOWNERS ASSOCIATION OF WESTPORT RESERVE, INC. SHALL BE RESPONSIBLE FOR MAINTAINING ALL LANDSCAPING AND IRRIGATION IN COMMON OPEN SPACE AREAS.

18. THE ARTICLES OF INCORPORATION FOR THE HOMEOWNERS ASSOCIATION OF WESTPORT RESERVE, INC. ARE RECORDED IN OFFICIAL RECORDS BOOK _____, PAGES _____ THROUGH _____ OF THE PUBLIC RECORDS OF VOLUSIA COUNTY, FLORIDA.

19. THIS PLAT IS SUBJECT TO THE DECLARATION OF COVENANTS AND RESTRICTIONS FOR THE HOMEOWNERS ASSOCIATION OF WESTPORT RESERVE, INC. ARE RECORDED IN OFFICIAL RECORDS BOOK _____, PAGES _____ THROUGH _____, OF THE PUBLIC RECORDS OF VOLUSIA COUNTY, FLORIDA.

20. THIS PLAT SUBJECT TO THE EASEMENT AND COST SHARING AGREEMENT AS RECORDED IN OFFICIAL RECORDS BOOK _____, PAGES _____ THROUGH _____, OF THE PUBLIC RECORDS OF VOLUSIA COUNTY, FLORIDA.

21. THE ENTRY AND SIGNAGE EASEMENT SHOWN HEREON WITHIN TRACT "H" IS HEREBY GRANTED TO THE HOMEOWNERS ASSOCIATION OF WESTPORT RESERVE, INC.

SHEET INDEX

SHEET 1 – COVER SHEET, NOTES, LEGEND/ABBREVIATIONS
SHEET 2 – KEY MAP
SHEETS 3 TO 12 – DETAIL SHEETS

Dewberry
131 West Kaley Street
Orlando, Florida 32806
Phone: 321.354.9826 Fax: 407.648.9104
WWW.DEWBERRY.COM
Certificate Of Authorization No. LB 8011

WESTPORT RESERVE

LYING IN SECTIONS 13 AND 14, TOWNSHIP 16 SOUTH, RANGE 32 EAST,
CITY OF PORT ORANGE, VOLUSIA COUNTY, FLORIDA

MAP BOOK: PAGE:

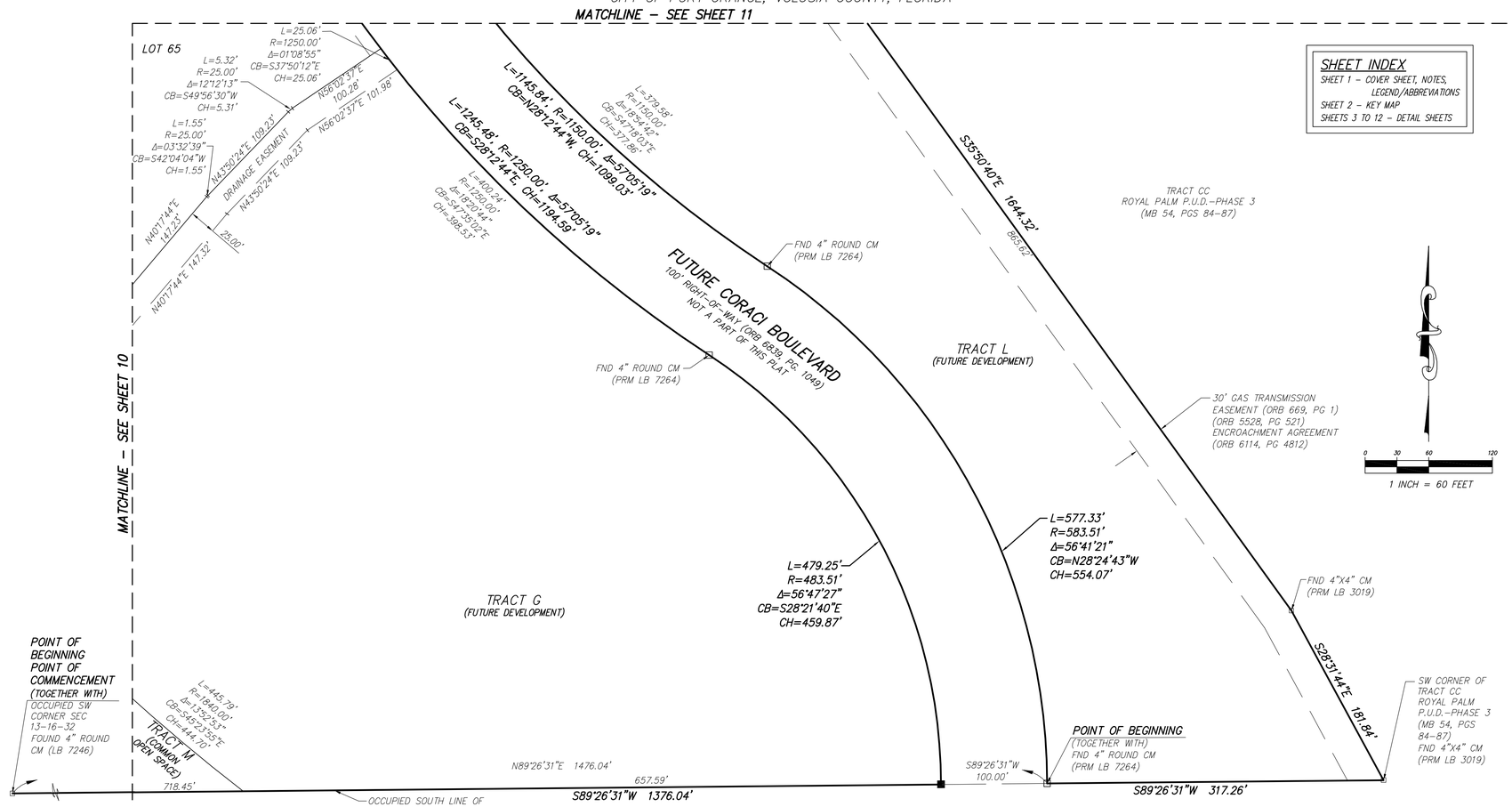

SHEET INDEX

SHEET 1 – COVER SHEET, NOTES, LEGEND/ABBREVIATIONS
SHEET 2 – KEY MAP
SHEETS 3 TO 12 – DETAIL SHEETS

GENERAL NOTES:

1. MONUMENTATION:
   - ⊡ – DENOTES PERMANENT REFERENCE MONUMENT FOUND STAMPED AS NOTED
   - – DENOTES PERMANENT REFERENCE MONUMENT SET 4"X4" CONCRETE MONUMENT STAMPED PRM LB 8011
   - ■ – DENOTES PERMANENT CONTROL POINT SET NAIL AND DISK STAMPED PCP LB 8011

2. ALL LINES INTERSECTING CURVES ARE RADIAL UNLESS OTHERWISE NOTED
   (R) – DENOTES A LINE RADIAL RELATIVE TO ADJACENT CURVE.
   (NR) – DENOTES A LINE NOT RADIAL RELATIVE TO ADJACENT CURVE.

3. DIMENSIONS SHOWN ARE IN FEET AND DECIMALS THEREOF.

4. ACCURACY:
   - THE BOUNDARY LINEAR ERROR OF CLOSURE DOES NOT EXCEED 1:10,000.
   - THE BOUNDARY ANGULAR ERROR OF CLOSURE DOES NOT EXCEED 15 SECONDS MULTIPLIED BY THE SQUARE ROOT OF THE NUMBER OF ANGLES TURNED.

5. BEARINGS SHOWN HEREON ARE ASSUMED AND BASED ON THE OCCUPIED SOUTH LINE OF THE SE 1/4 OF SECTION 14, TOWNSHIP 16 SOUTH, RANGE 32 EAST, VOLUSIA COUNTY, FLORIDA, HAVING A BEARING OF S88°57'35"W.

6. NOTE: ALL MEASUREMENTS REFER TO HORIZONTAL PLANE IN ACCORDANCE WITH THE DEFINITION OF THE U.S. SURVEY FOOT OR METER ADOPTED BY THE NATIONAL INSTITUTE OF STANDARDS AND TECHNOLOGY. ALL MEASUREMENTS SHALL USE THE 39.37/12=3.280833333333 EQUATION FOR CONVERSION FROM A U.S. FOOT TO METERS.

7. NOTICE: THIS PLAT, AS RECORDED IN ITS GRAPHIC FORM, IS THE OFFICIAL DEPICTION OF THE SUBDIVIDED LANDS DESCRIBED HEREIN AND WILL IN NO CIRCUMSTANCES BE SUPPLANTED IN AUTHORITY BY ANY OTHER GRAPHIC OR DIGITAL FORM OF THE PLAT. THERE MAY BE ADDITIONAL RESTRICTIONS THAT ARE NOT RECORDED ON THIS PLAT THAT MAY BE FOUND IN THE PUBLIC RECORDS OF THIS COUNTY.

8. THIS PLAT IS SUBJECT TO ALL EASEMENTS OF RECORD AND RESERVATIONS OF EASEMENTS, INCLUDING BUT NOT LIMITED TO DRAINAGE, UTILITY, AND ACCESS EASEMENTS DEDICATED OR GRANTED HEREON WHICH SHALL BE LOCATED AS FOLLOWS EXCEPT AS OTHERWISE NOTED ON THE PLAT:

ENTIRE STREET FRONTAGES OF LOTS AND COMMON OPEN SPACE AREAS: 12.00 FEET WIDE

9. UTILITIES INCLUDE BUT ARE NOT LIMITED TO SANITARY SEWER, POTABLE WATER, RECLAIMED WATER, STORM DRAINAGE, ELECTRIC, TELEPHONE, CABLE TELEVISION, SECURITY, NATURAL GAS, FIBER OPTIC, TELECOMMUNICATION.

10. ALL PLATTED UTILITY EASEMENTS, EXCLUSIVE OF PRIVATE EASEMENTS GRANTED TO OR OBTAINED BY A PARTICULAR ELECTRIC, TELEPHONE, GAS OR OTHER PUBLIC UTILITY, SHALL ALSO BE EASEMENTS FOR THE CONSTRUCTION, INSTALLATION, MAINTENANCE, AND OPERATION OF CABLE TELEVISION SERVICES; PROVIDED, HOWEVER, NO SUCH CONSTRUCTION, INSTALLATION, MAINTENANCE, AND OPERATION OF CABLE TELEVISION SERVICES SHALL INTERFERE WITH THE FACILITIES AND SERVICES OF AN ELECTRIC, TELEPHONE, GAS OR OTHER PUBLIC UTILITY. IN THE EVENT A CABLE TELEVISION COMPANY DAMAGES THE FACILITIES OF A PUBLIC UTILITY, IT SHALL BE SOLELY RESPONSIBLE FOR THE DAMAGES PURSUANT TO SECTION 177.091(28), FLORIDA STATUTES. SUCH CONSTRUCTION, INSTALLATION, MAINTENANCE AND OPERATION SHALL COMPLY WITH THE NATIONAL ELECTRICAL SAFETY CODE AS ADOPTED BY THE FLORIDA PUBLIC SERVICE COMMISSION.

11. ALL OTHER EASEMENTS ARE SUBORDINATE TO ANY CONSERVATION EASEMENTS DEDICATED HEREON. THERE SHALL BE NO REMOVAL OR DISTURBANCE OF ANY VEGETATION WITHIN SUCH CONSERVATION EASEMENTS. ANY PROPOSED CONSTRUCTION OR OTHER USE WITHIN A CONSERVATION EASEMENT MUST BE REVIEWED AND APPROVED BY THE CITY OF PORT ORANGE AND ANY OTHER AUTHORITY HAVING JURISDICTION OVER THE CONSERVATION EASEMENT.

12. BUILDING SETBACK REQUIREMENTS:
    FRONT = 25 FEET
    REAR = 20 FEET
    SIDE = LOTS ≤ 65' = 5 FEET
    LOTS > 65' = 7.5 FEET
    SIDE CORNER = 20 FEET

13. LOT COVERAGE REQUIREMENTS:
    MAXIMUM COMMON OPEN SPACE = 40%
    MAXIMUM BUILDING COVERAGE = 50%
    MAXIMUM BUILDING HEIGHT = 36 FEET

14. THE COMMON OPEN SPACE AREAS GRANTED TO THE HOMEOWNERS ASSOCIATION OF WESTPORT RESERVE, INC. BY THIS PLAT SHALL BE SUBJECT TO EASEMENTS AS SHOWN OR DESCRIBED HEREON OR GRANTED IN ACCORDANCE WITH THE HOMEOWNERS ASSOCIATION OF WESTPORT RESERVE, INC.'S COVENANTS AND RESTRICTIONS. THE GRANTING OF SUCH COMMON OPEN SPACE AREAS IS NOT INTENDED TO GRANT ANY RIGHT TO THE GENERAL PUBLIC.

15. THE HOMEOWNERS ASSOCIATION OF WESTPORT RESERVE, INC., A FLORIDA NON–PROFIT CORPORATION SHALL BE RESPONSIBLE FOR THE OPERATION AND MAINTENANCE OF THE DRAINAGE SYSTEM SERVING THE AREA WITHIN THE BOUNDARIES OF THIS PLAT, AS DEPICTED ON THE STORMWATER MANAGEMENT PLAN APPROVED FOR THE DEVELOPMENT BY THE CITY OF PORT ORANGE, FLORIDA. SHOULD THE ASSOCIATION FAIL TO PERFORM THE MAINTENANCE OF THE DRAINAGE AND STORMWATER MANAGEMENT SYSTEMS, THE CITY OF PORT ORANGE SHALL BE ENTITLED TO ENTER UPON THE COMMON OPEN SPACE AREAS AND DESIGNATED EASEMENT AREAS TO PERFORM MAINTENANCE, REPAIR OR REPLACE THE FACILITIES; AND, SHALL HAVE THE RIGHT TO LIEN ALL OWNERS OF RECORD IN PROPERTY FOR THE COST OF SUCH MAINTENANCE, REPAIR, AND REPLACEMENT, AS DEEMED BY THE CITY TO BE NECESSARY. IN THE EVENT OF TERMINATION, DISSOLUTION, OR FINAL LIQUIDATION OF THE ASSOCIATION, THE RESPONSIBILITY FOR THE OPERATION AND MAINTENANCE OF THE SURFACE WATER OR STORM WATER MANAGEMENT SYSTEM WILL BE TRANSFERRED TO AND ACCEPTED BY AN ENTITY WHICH COMPLIES WITH SECTION 40C–42.027, F.A.C. AND BE APPROVED BY THE SAINT JOHNS RIVER WATER MANAGEMENT DISTRICT PRIOR TO SUCH TERMINATION, DISSOLUTION, OR LIQUIDATION.

16. RETENTION AREAS AND COMMON OPEN SPACE AREAS ARE GRANTED AS EASEMENTS TO THE CITY OF PORT ORANGE WITH RIGHTS OF ACCESS, INGRESS, AND EGRESS, TOGETHER WITH THE RIGHT TO HARVEST EXCESS STORM WATER / GROUND WATER AS DEEMED APPROPRIATE IN THE DISCRETION OF THE CITY.

17. THE HOMEOWNERS ASSOCIATION OF WESTPORT RESERVE, INC. SHALL BE RESPONSIBLE FOR MAINTAINING ALL LANDSCAPING AND IRRIGATION IN COMMON OPEN SPACE AREAS.

18. THE ARTICLES OF INCORPORATION FOR THE HOMEOWNERS ASSOCIATION OF WESTPORT RESERVE, INC. ARE RECORDED IN OFFICIAL RECORDS BOOK _____, PAGES _____ THROUGH _____ OF THE PUBLIC RECORDS OF VOLUSIA COUNTY, FLORIDA.

19. THIS PLAT IS SUBJECT TO THE DECLARATION OF COVENANTS AND RESTRICTIONS FOR THE HOMEOWNERS ASSOCIATION OF WESTPORT RESERVE, INC. ARE RECORDED IN OFFICIAL RECORDS BOOK _____, PAGES _____ THROUGH _____, OF THE PUBLIC RECORDS OF VOLUSIA COUNTY, FLORIDA.

20. THIS PLAT SUBJECT TO THE EASEMENT AND COST SHARING AGREEMENT AS RECORDED IN OFFICIAL RECORDS BOOK _____, PAGES _____ THROUGH _____, OF THE PUBLIC RECORDS OF VOLUSIA COUNTY, FLORIDA.

21. THE ENTRY AND SIGNAGE EASEMENT SHOWN HEREON WITHIN TRACT "H" IS HEREBY GRANTED TO THE HOMEOWNERS ASSOCIATION OF WESTPORT RESERVE, INC.

Dewberry
131 WEST KALEY STREET
ORLANDO, FLORIDA 32806
PHONE: 321.354.9826 FAX: 407.648.9104
WWW.DEWBERRY.COM
CERTIFICATE OF AUTHORIZATION NO. LB 8011

Site Permit

Issued for	Permit
Date Issued	January 12, 2016
Latest Issue	July 01, 2016

Westport Reserve
(Phase 2B)
City of Port Orange, Florida
Parcel IDs #:

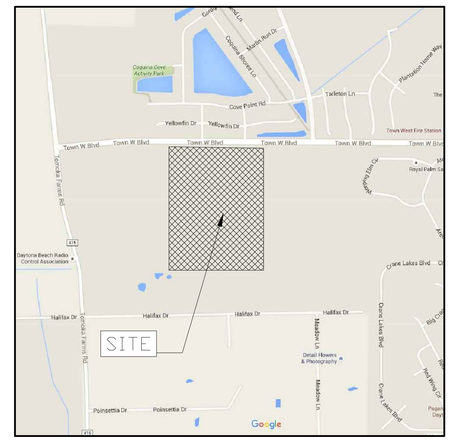

Site Location Map

0 0 NTS Feet

vhb.com

225 E. Robinson Street
Suite 300
Orlando, FL 32801
407.839.4006
Certificate of Authorization
Number FL #3932

Owner

Emerson International
370 CenterPointe Circle, Suite 1136
Altamonte Springs, FL 32701
Tel.: 407.834.9560

Developer / Applicant

Jones Homes USA
Contact: Scott Stearns, PE
370 CenterPointe Circle, Suite 1136
Altamonte Springs, FL 32701
Tel.: 407.998.3206

Sheet Index

No.	Drawing Title	Latest Issue
C-100	Cover Sheet	7/01/2016
L-000	General Notes	7/01/2016
L-100	Overall Hardscape Plan	7/01/2016
L-101-L-102	Hardscape Plans	7/01/2016
L-200-L-203	Hardscape Details	7/01/2016
L-300	Overall Landscape Plan	7/01/2016
L-301-L-302	Landscape Plans	7/01/2016
L-350	Landscape Specifications	7/01/2016
L-351	Landscape Notes	7/01/2016
L-352	Landscape Details & Schedule	7/01/2016
L-401- L-402	Irrigation Plans	7/01/2016
L-403	Irrigation Details	7/01/2016
L-404	Irrigation Notes	7/01/2016
L-501-L-502	Landscape Lighting Plans	7/01/2016
L-550	Landscape Lighting Details	7/01/2016

Civil Engineer:
Dewberry
800 North Magnolia Ave, Suite 1000
Orlando, FL 32803
P 321.354.9711 · F 407.649.8664

Landscape Architect:
VHB
225 E. Robinson St., Suite 300
Orlando, FL 32801
P 407.839.4006 · F 407.839.4008

Architect:
Charlan Brock and Associates
1770 Fennell Street
Maitland, Florida 32751
P 407.660.8900

Irrigation Designer:
Insight Irrigation LLC
Umatilla, Florida 32751
P 352.434.5015

Christopher J. Brown
LA 0000703
DATE: Jul. 01, 2016

VHB Project : 62444.00
Issued for : Site Plan Permit

\\VHB\PROJ\ORLANDO\62444.00 EMERSON-COQUINA COVE\CAD\LD\PLANSET\WESTPORT SINGLE-FAMILY\62444.00-WP_LA-COVER 1 July 2016

Notes:

GENERAL LANDSCAPE NOTES

1) ALL ON-SITE EXISTING CONDITIONS INCLUDING SURFACE AND SUBSURFACE UTILITIES, GRADES, DIMENSIONS AND SOIL CONDITIONS SHALL BE VERIFIED BY THE CONTRACTOR BEFORE CONSTRUCTION BEGINS. THE CONTRACTOR SHALL BECOME FAMILIAR WITIH ALL PLANS PREPARED BY OTHERS THAT AFFECT THE LANDSCAPE WORK. ANY DISCREPANCIES SHALL BE BROUGHT TO THE ATTENTION OF THE LANDSCAPE ARCHITECT.

2) EVERY POSSIBLE SAFEGUARD SHALL BE TAKEN TO PROTECT BUILDING SURFACES, EQUIPMENT, FURNISHINGS AND EXISTING PLANTING AREAS TO REMAIN INCLUDING LAWN. THE CONTRACTOR IS RESPONSIBLE FOR ANY DAMAGE OR INJURY TO PERSON OR PROPERTY THAT MAY OCCUR AS A RESULT OF NEGLIGENCE IN THE EXECUTION OF THE CONTRACTOR'S WORK

3) THE CONTRACTOR SHALL INTERFACE WITH OTHER WORK BEING PERFORMED BY OTHER CONTRACTORS. IT WILL BE NECESSARY FOR THE CONTRACTOR TO COORDINATE AND SCHEDULE ACTIVITIES, WHERE NECESSARY, WITH OTHER CONTRACTORS AND THEIR SUBCONTRACTORS. THE LANDSCAPE CONTRACTOR SHALL INSURE THAT THEIR WORK DOES NOT IMPACT ESTABLISHED OR PROJECTED DRAINAGE PATTERNS

4) PRIOR TO PLANTING INSTALLATION, THE CONTRACTOR SHALL CONFIRM THE AVAILABILITY OF ALL THE SPECIFIED PLANT MATERIALS AND MAKE ARRANGEMENTS WITH THE LANDSCAPE ARCHITECT AND OWNER'S REPRESENTATIVE TO REVIEW OR MUTUALLY FIELD TAG AGREED UPON PLANT MATERIALS AT LEAST TWO (2) WEEKS PRIOR TO DELIVERY TO SITE.

5) ALL PLANT MATERIAL SIZES SPECIFIED ARE MINIMUM SIZES. ALL CONTAINER AND TREE CALIPER SIZES ARE MINIMUM. CONTAINER OR CALIPER SIZE MAY BE INCREASED IF NECESSARY TO PROVIDE OVERALL PLANT SIZE SPECIFIED.

6) PLANT SUBSTITUTIONS WILL BE PERMITTED WITH PRIOR APPROVAL FROM THE LANDSCAPE ARCHITECT. IF SPECIFIED PLANT MATERIALS ARE NOT AVAILABLE, IDENTIFY THE EXTENT AND QUANTITY IN WRITING TOGETHER WITH A RECOMMENDED SUBSTITUTION THAT MEETS OR EXCEEDS THE INITIAL REQUIREMENT.

7) THE CONTRACTOR SHALL BE RESPONSIBLE FOR REMOVING EXISTING VEGETATION AS REQUIRED AND PREPARING PLANTING AREAS PRIOR TO INSTALLATION OF PLANT MATERIALS.

8) THE LANDSCAPE CONTRACTOR SHALL TEST PROJECT SOILS TO VERIFY THAT THE SOILS ON-SITE ARE ACCEPTABLE FOR PROPER GROWTH OF PLANT MATERIALS AND ADEQUATE DRAINAGE IN PLANT BEDS AND PLANTERS. THE LANDSCAPE CONTRACTOR SHALL COORDINATE THE LOCATION, AND PROCUREMENT OF EXISTING ON-SITE SOIL SAMPLES WITH THE LANDSCAPE ARCHITECT. REPRESENTATIVE SAMPLES SHALL BE SUBMITTED TO A CERTIFIED TESTING LABORATORY FOR ANALYSIS. THE FINDINGS, TOGETHER WITH RECOMMENDATIONS FOR AMENDING THE SOILS SHALL BE REVIEWED AND APPROVED BY THE OWNER, LANDSCAPE ARCHITECT, AND OWNER'S REPRESENTATIVE PRIOR TO DELIVERY AND INSTALLATION OF PLANT MATERIALS AT THE JOB.

9) THE LANDSCAPE CONTRACTOR SHALL INSURE ADEQUATE VERTICAL SOIL DEPTH AND DRAINAGE IN ALL PLANT BEDS AND PLANTERS. EXCAVATION OF ROCK AND COMPACTED FILL SHALL BE ACCOMPLISHED TO INSURE PROPER SOIL DEPTH AND DRAINAGE.

10) ALL PLANTING BEDS SHALL BE STAKED IN ACCORDANCE WITH THE PLANS AND APPROVED BY THE LANDSCAPE ARCHITECT OR OWNER'S REPRESENTATIVE PRIOR TO PLANTING. THE LANDSCAPE CONTRACTOR SHALL PROVIDE STAKES OR IRRIGATION FLAGS TO LOCATE THE EDGES OF ALL SHRUB AND GROUNDCOVER PLANT BEDS AND INDIVIDUAL TREES AND PALMS. IF EXISTING CONDITIONS DO NOT ALLOW THE DESIGN TO BE LAID OUT AS SHOWN, NOTIFY THE LANDSCAPE ARCHITECT IMMEDIATELY.

11) ALL PROPOSED TREES SHALL BE INSTALLED EITHER ENTIRELY IN OR ENTIRELY OUT OF PLANTING BEDS. PLANTING BED OUTLINES SHALL NOT BE OBSTRUCTED AND SHALL BE SMOOTH AND FLOWING. IF TREES ARE LOCATED OUTSIDE PLANTING BEDS IN GRASS AREAS, MAINTAIN A MINIMUM THREE FEET 3' WIDE OFFSET TO ALLOW FOR MOWERS TO MANEUVER.

12) THE PLANT QUANTITIES SHOWN ON THE LANDSCAPE CONTRACT DOCUMENTS ARE FOR THE CONVENIENCE OF THE LANDSCAPE CONTRACTOR. THE LANDSCAPE CONTRACTOR IS RESPONSIBLE FOR VERIFYING ALL QUANTITIES AND REPORTING ANY DISCREPANCIES TO THE LANDSCAPE ARCHITECT FOR CLARIFICATION PRIOR TO CONTRACT AWARD AND COMMENCEMENT OF WORK.

13) THE LANDSCAPE CONTRACTOR SHALL VERIFY THE EXTENT OF GRASSING WORK IN THE FIELD. THE CONTRACTOR SHALL BE RESPONSIBLE FOR PROVIDING GRASS IN THE AREAS SHOWN ON THE PLAN IN SUFFICIENT QUANTITY TO PROVIDE FULL COVERAGE. ADDITIONAL GRASS REQUIRED WILL BE ADJUSTED BASED ON A SQUARE FOOTAGE UNIT PRICE. AREAS TO BE GRASSED SHALL BE AMENDED PER SOILS REPORT TO PROVIDE REQUIRED NUTRIENTS AND SOIL PH OF BETWEEN 6.0 AND 7.0.

14) THE LANDSCAPE CONTRACTOR SHALL BE RESPONSIBLE FOR PROVIDING PLANTS, SPACED AS SPECIFIED ON THE PLANT LIST. WHEN INSTALLING SHRUBS IN PLANTING BEDS, SPACING OF MATERIAL SHALL TAKE PRECEDENCE OVER QUANTITY OF MATERIALS INDICATED FOR PLANTING AREAS. NOTIFY LANDSCAPE ARCHITECT IMMEDIATELY IF SUCH SITUATIONS ARISE. SHRUB AND GROUNDCOVER SPACING IS GENERALLY INDICATED ON THE PLANT LIST FOR ALL 'MASS PLANTINGS'. ACCENT SHRUBS AND TREES THAT ARE NOT PART OF MASS PLANTINGS SHALL BE SPACED AS SHOWN ON THE PLANS.

15) THE LANDSCAPE CONTRACTOR SHALL BE RESPONSIBLE FOR THE STABILITY AND PLUMB CONDITION OF ALL INSTAI.LED PLANT MATERIALS. THE CONTRACTOR SHALL REMOVE ALL STAKING MATERIALS THE END OF THE GROW-IN PERIOD AND DISPOSE OFFSITE.

16) ALL PLANTING BEDS SHALL BE TOP-DRESSED WITH A 3" LAYER OF MULCH AS SPECIFIED. ALL TREES SHALL HAVE A 3" THICK MULCH RING PLACED AROUND THE BASE OF THE TRUNK. THE LANDSCAPE SCOPE OF WORK INCLUDES MULCHING AS AN INTEGRAL PART THE PROJECT.

17) ALL PLANT MATERIALS SHALL RECEIVE ADEQUATE WATERING BY THE LANDSCAPE CONTRACTOR AS REQUIRED UNTIL THE LANDSCAPE IRRIGATION SYSTEM IS FULLY OPERATIONAL AND UNTIL FINAL ACCEPTANCE BY OWNER.

18) ALL EXISTING PLANT BEDS TO REMAIN WITHIN THE CONSTRUCTION LIMIT LINE SHALL BE LEFT UNDISTURBED. EXISTING TREES TO REMAIN, AS NOTED ON THE DRAWINGS, SHALL BE LEFT UNDISTURBED AND PROTECTED BY WOODEN BARRICADES ERECTED AT THE PERIMETER OF THE TREE DRIP-LINE (S). NO VEHICLE SHALL TRAVERSE THIS AREA NOR SHALL ANY STORAGE OF MATERIALS OR EQUIPMENT BE PERMITTED WITHIN THE AREA OF THE TREE DRIP-LINE(S). ANY EXISTING PLANT BEDS OR TREES DAMAGED BY CONSTRUCTION ACTIVITY SHALL BE REPLACED BY THE RESPONSIBLE PARTY AT THEIR OWN EXPENSE.

19) NO TREES SHALL BE PLANTED WITHIN DESIGNATED UTILITY CORRIDORS, PUBLIC RIGHT OF WAY NOR ANY PLANTS LOCATED WITHIN FOUR FEET (4') OF ANY SWALE CENTERLINE IDENTIFIED ON THE DRAWINGS. FIELD ADJUST AS NECESSARY AND REVIEW ADJUSTMENTS WITH THE LANDSCAPE ARCHITECT PRIOR TO INSTALLATION.

20) THE CONTRACTOR SHALL BE RESPONSIBLE FOR REMOVAL OF ALL DEBRIS AND EXCAVATED BACKFILL OFF-SITE ON A DAILY BASIS AT NO ADDITIONAL COST TO THE OWNER.

21) SEE LANDSCAPE SPECIFICATIONS FOR FURTHER REQUIREMENTS.

GENERAL FINE GRADING NOTES

1) REFER TO CIVIL DRAINAGE FOR EARTHWORK AND SITE PLANNING.

2) THE CONTRACTORS SHALL BE REQUIRED TO PROVIDE ALL FINE GRADING NECESSARY TO ACHIEVE THE FINISHED GRADES NOTED ON THE GRADING PLANS ACCORDING TO THE SPECIFICATIONS.

3) UNDERGROUND UTILITIES, CONDUIT, SLEEVES, DRAINAGE PIPES, ETC.; HAVE BEEN PREVIOUSLY INSTALLED OR SCHEDULED FOR FUTURE INSTALLATION BY OTHERS. CONTRACTOR SHALL COORDINATE AND WORK CLOSELY WITH OTHER CONTRACTORS, TRADES, AND THE OWNER'S REPRESENTATIVE TO AVOID DAMAGE TO THESE UNDERGROUND AND AT GRADE ELEMENTS. ANY DAMAGES SHALL BE REPORTED IMMEDIATELY TO THE OWNER'S REPRESENTATIVE.

4) FINISHED GRADE IN PLANTING BED AREAS SHALL BE 2" TO 3" BELOW THE FINISHED ELEVATIONS SHOWN FOR ALL HARDSCAPE SURFACES (SEE DETAILS FOR VARYING CONDITIONS).

5) ALL UTILITIES, SLEEVES, MANHOLES, OUTFALL STRUCTURES, SHALES, AND OTHER STRUCTURES OR TOPOGRAPHICAL FEATURES SHALL BE FIELD STAKED AND VERIFIED PRIOR TO CONSTRUCTION. NOTIFY THE OWNER'S REPRESENTATIVE OF ANY EXISTING UTILITY WHICH NEEDS TO BE RAISED TO MATCH FINISHED GRADES SHOWN IN THE DRAWINGS

6) ALL FILL REQUIRED SHALL BE CLEAN, WELL DRAINING SOIL. FILL SHALL BE CLEAN AND FREE OF ALL MATERIAL HARMFUL TO PLANT GROWTH AND DELETERIOUS MATERIAL SUCH AS ROCKS (LARGER THAN 2" DIA.), COMPACTED CLAY, ROAD BED OR SURFACING MATERIAL, MARL, ROOTS, BRANCHES, ETC.

7) CONTOURS FOR BERMING SHALL BE SMOOTH, CONTINUOUS ARCS. SIDE SLOPES SHALL BE SMOOTH AND EVEN IN TRANSITION AND VOID OF DEPRESSIONS AND SURFACE IRREGULARITIES. ALL BERMS SHALL HAVE A MAXIMUM SIDE SLOPE OF THREE FEET (3') 1-HORIZONTAL TO ONE FOOT (I') VERTICAL (IE, 3 TO I), UNLESS OTHERWISE NOTED.

8) MAXIMUM SIDEWALK SLOPE SHALL BE 5% (5:1) - UNLESS OTHERWISE NOTED. MINIMUM SIDEWALK SLOPE SHALL BE 1%. MAXIMUM SIDEWALK CROSS SLOPE SHALL BE 2% PITCHED TOWARD DRAINAGE STRUCTURES.

9) ALL PAVEMENT AND LANDSCAPE AREAS OF THE PROJECT SHALL POSITIVELY DRAIN TO DRAINAGE STRUCTURES INDICATED ON THE SITE GRADING PLANS.

10) THE GENERAL CONTRACTOR SHALL BE RESPONSIBLE FOR ALL EROSION PROTECTION AND SLOPE STABILIZATION BY OWNER-APPROVED MEANS.

11) GENERAL CONTRACTOR SHALL FURNISH AND INSTALL ALL NECESSARY FENCES, BARRICADES, AND SEDIMENT CONTROL DEVICES AND WILL MAINTAIN AND REPAIR ANY DAMAGE WHICH MAY IMPEDE THEIR EFFECTIVENESS AND AS DIRECTED BY THE OWNER'S REPRESENTATIVE.

12) BOUNDARY BETWEEN CUT/FILL SLOPES AND EXISTING GRADES SHOULD BE ROUNDED TO CREATE A NATURAL APPEARANCE WHERE POSSIBLE.

13) CONTRACTOR SHALL CONTROL STORMWATER RUNOFF DURING CONSTRUCTION TO PREVENT ADVERSE IMPACTS TO OFF SITE AREAS, AND SHALL BE RESPONSIBLE TO REPAIR RESULTING DAMAGES, IF ANY, AT NO COST TO OWNER.

14) EROSION/SEDIMENT CONTROL BEST MANAGEMENT PRACTICES (BMP) IN ADDITION TO THOSE PRESENTED ON THE PLANS SHALL BE IMPLEMENTED AS NECESSARY TO PREVENT TURBID DISCHARGES FROM LEAVING THE PROJECT SITE. MEASURES SHALL BE IMPLEMENTED TO ENSURE SURFACE WATER QUALITY CONDITIONS ARE IN COMPLIANCE WITH THE WATER QUALITY STANDARDS. SPECIFICALLY, SEDIMENT CONTROL SHALL BE INSTALLED TO PROTECT THE EXISTING STORMSEWER SYSTEM.

GENERAL SITE LAYOUT NOTES

1) SEE CIVIL DRAWINGS FOR CONSTRUCTION LAYOUT GEOMETRY OF THE PROJECT'S SITE DEVELOPMENT ELEMENTS.

2) REFER TO HARDSCAPE PLANS AND DETAILS AS WELL AS THE STRUCTURAL DOCUMENTS FOR ADDITIONAL LAYOUT INFORMATION.

3) GENERAL CONTRACTOR SHALL COORDINATE AND VERIFY ALL POINTS OF BEGINNING AND BENCHMARKS FOR THE S1TE WITH THE OWNER'S REPRESENTATIVE PRIOR TO INITIATING LAYOUT OF SITE ELEMENTS. ANY DISCREPANCIES SHALL BE IMMEDIATELY BROUGHT TO THE ATTENTION OF THE OWNER'S REPRESENTATIVE AND THE LANDSCAPE ARCHITECT.

4) UNLESS NOTED OTHERWISE, THE LIMITS OF CONSTRUCTION SHALL BE AS NOTED ON THE DRAWINGS.

5) GENERAL CONTRACTOR SHALL USE THE COORDINATE GEOMETRY INDICATED ON THE HARDSCAPE PLANS TO LAYOUT PAVEMENT AND PAVEMENT PATTERNS, ETC. BRING ANY DISCREPANCIES, INCONSISTENCIES OR ERRORS TO THE ATTENTION OF THE OWNER'S REPRESENTATIVE AND LANDSCAPE ARCHITECT PRIOR TO CONSTRUCTION.

6) WHEREVER POSSIBLE, THE CONTRACTOR SHALL COORDINATE THE LOCATION OF THE DRAIN INLETS AND OTHER AT GRADE UTILITY ELEMENTS WITH THE LAYOUT OF THE PAVEMENT AND PAVEMENT PATTERN.

GENERAL SITE HARDSCAPE NOTES

1) THE CONTRACTORS SHALL FIELD VERIFY ALL EXISTING CONDITIONS AND LOCATION OF PROPOSED IMPROVEMENTS PRIOR TO INITIATING ANY CONSTRUCTION

2) REFER TO THE CIVIL AND HARDSCAPE DRAWINGS FOR LAYOUT GEOMETRY INFORMATION FOR ALL SITE ELEMENTS.

3) THE CONTRACTOR SHALL FIELD VERIFY OF ALL UNDERGROUND UTILITIES, IRRIGATION AND OTHER ELEMENTS AND COORDINATE WITH THE OWNER'S REPRESENTATIVE PRIOR TO INITIATING OPERATIONS. DRAWINGS ARE PREPARED ACCORDING TO THE BEST INFORMATION AVAILABLE AT THE TIME OF PREPARING THESE DOCUMENTS.

4) ALL EXISTING SITE ROADS, PARKING LOTS, CURBS, UTILITIES, SEWERS AND OTHER ELEMENTS TO REMAIN SHALL BE FULLY PROTECTED FROM ANY DAMAGE UNLESS OTHERWISE NOTED. REPORT ANY DISCREPANCIES BETWEEN THE CONSTRUCTION DRAWINGS AND FIELD CONDITIONS TO THE OWNER'S REPRESENTATIVE IMMEDIATELY. THE CONTRACTOR SHALL COORDINATE ALL WORK WITH RELATED CONTRACTORS AND WITH THE GENERAL CONSTRUCTION OF THE PROJECT IN ORDER NOT TO IMPEDE THE PROGRESS OF THE WORK OF OTHERS OR THE CONTRACTOR'S OWN WORK.

5) THE CONTRACTOR SHALL PROVIDE ALL NECESSARY SAFETY MEASURES DURING CONSTRUCTION OPERATIONS TO PROTECT THE PUBLIC ACCORDING TO ALL APPLICABLE CODES AND RECOGNIZED LOCAL PRACTICES

6) THE CONTRACTOR SHALL COORDINATE ACCESS AND STAGING AREAS WITH THE OWNER'S REPRESENTATIVE.

7) ALL PAVEMENT JOINTS ARE TO BE PARALLEL, PERPENDICULAR OR TANGENT TO ADJACENT LINES UNLESS NOTED OTHERHISE. LAYOUT CURVILINEAR JOINTS AS INDICATED ON THE DRAWINGS FOR APPROVAL BY THE OWNER'S REPRESENTATIVE PRIOR TO CONSTRUCTION

8) ALL PAVEMENT SHALL BE STAKED IN THE FIELD USING DIMENSIONS AND LAYOUT GEOMETRY INDICATED ON THE CIVIL PLANS OR AS INSTRUCTED AND APPROVED BY THE OWNER'S REPRESENTATIVE PRIOR TO CONSTRUCTION. ALIGNMENT MAY BE ADJUSTED TO ACCOMMODATE EXISTING DRAIN INLETS, MANHOLES, OR OTHER SITE ELEMENTS

9) THE CONTRACTOR SHALL PROVIDE SAMPLE PAVERS AND FINISHES OF ALL PAVING FOR APPROVAL BY THE OWNER'S REPRESENTATIVE PRIOR TO CONSTRUCTION IN CONFORMANCE WITH THE SPECIFICATIONS.

10) THE CONTRACTOR SHALL SUBMIT SAMPLES OF ALL JOINT SEALANTS AND COLORS FOR APPROVAL BY THE OWNER'S REPRESENTATIVE PRIOR TO INSTALLATION

11) THE GENERAL CONTRACTOR SHALL PROVIDE, INSTALL, AND MAINTAIN ALL EROSION AND SEDIMENTATION CONTROL MEASURES (SILT FENCE, GEO FENCE AND/OR OTHER MEASURES) DURING CONSTRUCTION.

12) SEE HARDSCAPE DETAILS FOR CONCRETE EXPANSION JOINTS AND CONTROL JOINTS. CONTROL AND EXPANSION JOINT MODULE WIDTH MAY VARY TO ACHIEVE THE LAYOUT DEPICTED ON THE PLANS. THE CONTRACTOR SHALL FIELD MEASURE AND IDENTIFY MODULAR WIDTHS THAT ACHIEVE THE INTENT OF THE LAYOUT SHOWN ON THE PLAN. CONTRACTOR SHALL SUBMIT TO THE OWNER'S REPRESENTATIVE A REDLINED PLAN SHOWING ANY REQUIRED CHANGES IN JOINT LAYOUT PRIOR TO PLACEMENT. EXPANSION JOINTS SHALL BE PROVIDED AS SHOWN ON THE PLANS AND AT ALL INTERFACES.

13) SEE CIVIL GRADING PLANS FOR PAVEMENT ELEVATIONS. MATCH GRADES WITH EXISTING CONDITIONS. VERIFY THAT THE PAVEMENT SURFACES BETWEEN EXISTING AND NEW ARE FLUSH AND PROVIDE SMOOTH TRANSITION.

14) THE CONTRACTORS SHALL CLEAN THE WORK AREAS AT THE END OF EACH WORKING DAY. RUBBISH AND DEBRIS SHALL BE COLLECTED AND DEPOSITED OFF-SITE DAILY. ALL MATERIALS, PRODUCTS AND EQUIPMENT SHALL BE STORED IN AN ORGANIZED FASHION AS DIRECTED BY THE OWNER'S REPRESENTATIVE.

15) THE GENERAL CONTRACTOR SHALL BE RESPONSIBLE FOR COORDINATING THE LOCATION OF ALL DRAIN INLETS, CATCH BASINS, YARD DRAINS AND MANHOLES INDICATED ON THE CIVIL PLANS WHERE POSSIBLE, DRAIN INLETS IN PAVEMENT SHALL BE LOCATED AT THE INTERSECTION OF PAVEMENT JOINTS OR IN THE CENTER OF A PAVEMENT FIELD DEFINED BY THE PAVEMENT JOINT PATTERN INDICATED ON THE DRAWINGS.

GENERAL SITE LIGHTING NOTES

1) ALL LIGHTING SHALL BE INSTALLED BY A LICENSED ELECTRICAN(S) IN CONFORMANCE WITH ALL APPLICABLE REGULATORY CODES. THE CONTRACTOR AND/OR ELECTRICIAN SHALL OBTAIN ALL REQUIRED PERMITS PRIOR TO INSTALLATION.

2) THE CONTRACTOR AND/OR ELECTRICIAN SHALL PROVIDE SUBMITTALS AND/OR SHOP DRAWNGS OF ALL SITE FIXTURES FOR APPROVAL BY THE OWNER AND LANDSCAPE ARCHITECT PRIOR TO INSTALLATION.

3) ALL LIGHTING SHALL BE PROVIDED AS IDENTIFIED ON THE DRAWINGS AND/OR IN THE SPECIFICATIONS. NO SUBSTITUTIONS IN MATERIALS OR MANUFACTURER SHALL BE PERMITTED WITHOUT THE EXPRESS WRITTEN APPROVAL OF THE LANDSCAPE ARCHITECT AND OWNER

4) THE CONTRACTOR SHALL FIELD STAKE THE LOCATION OF ALL SPECIFIED LIGHTING UNITS SHOWN ON THE PLAN AND OBTAIN THE OWNER'S WRITTEN APPROVAL PRIOR TO INSTALLATION.

5) THE CONTRACTOR SHALL INSTALL ALL LIGHT FIXTURES PER THE MANUFACTURER'S RECOMMENDATIONS.

6) LIGHTING SYSTEM SHOULD ALLOW ADDITIONAL JUNCTION BOXES FOR DIRECTIONAL SIGNS, FUTURE EXPANSION AND TEMPORARY LIGHTING NEEDS.

7) COORDINATE LIGHT CONDUIT, TRENCHING, AND BACKFILL WITH IRRIGATION, AND OTHER UTILITIES AS REQUIRED WITH OWNER'S REPRESENTATIVE.

8) LOCATE CONDUITS NEAR EDGE OF PLANTING AREAS TO AVOID CONFLICT WITH PLANTING INSTALLATION.

GENERAL SITE FURNISHINGS NOTES

1) THE CONTRACTOR TO PROVIDE THE FOLLOWING SUBMITTALS,
- ALL MANUFACTURER'S DATA INCLUDING DIRECTIONS OR RECOMMENDATIONS FOR INSTALLATION, METHODS, PROCEDURES AND MAINTENANCE.
- COMPLETE SHOP DRAWINGS FOR ALL SITE FURNISHINGS INDICATING ALL DETAILS OF FABRICATION AND INSTALLATION INCLUDING SIZES, SHAPES, FINISHES, COLORS, THICKNESS, MATERIAL QUALITY AND ALL OTHER RELATED WORK APPLICABLE TO THE SITE FURNISHINGS.
- SUBMIT COLOR SAMPLES FOR APPROVAL BY THE OWNER.

2) DELIVER ALL MATERIALS WITH MANUFACTURER'S TAGS AND LABELS INTACT IN CLEAN, DRY AND PROTECTED LOCATIONS.

3) STORE AND HANDLE ALL SITE FURNISHINGS SO AS TO AVOID DAMAGE.

4) ALL SITE FURNISHINGS SHALL BE PROVIDED BY THE CONTRACTOR INCLUDING ORDERING, SHIPPING, DELIVERY, UNPACKING, AND INSTALLING ACCORDING TO MANUFACTURER'S SPECIFICATIONS AND AS DETAILED ON THE DRAWINGS. THE CONTRACTOR SHALL VERIFY INSTALLATION PROCEDURE WITH THE OWNER'S REPRESENTATIVE PRIOR TO INSTALLING.

5) ALL SITE FURNISHINGS LOCATIONS ARE TO BE APPROVED BY OWNER'S REPRESENTATIVE PRIOR TO BEING PLACED ON SITE.

6) ALL SITE FURNISHINGS SHALL BE GUARANTEED BY THE CONTRACTOR FREE OF DEFECTS, CRACKS, CHIPS, STAINS AND SHALL BE COMPLETELY CLEAN AND FREE OF DAMAGES UPON FINAL PLACEMENT AND APPROVAL

ABBREVIATIONS:

APPROX	APPROXIMATE
BLDG	BUILDING
BOC	BACK OF CURB
CONT	CONTINUOUS
EOP	EDGE OF PAVEMENT
EX	EXISTING
HC	HANDICAP
GEN	GENERAL
GC	GENERAL CONTRACTOR
HORT	HORIZONTAL
LC	LANDSCAPE CONTRACTOR
MAX	MAXIMUM
MIN	MINIMUM
MISC	MISCELLANEOUS
NOM	NOMINAL
NTS	NOT TO SCALE
OC	ON CENTER
QTY	QUANTITY
REINF	REINFORCING
SIM	S1MILAR
SPEC(S)	SPECI FICATIONS
TEMP	TEMPORARY
TYP	TYPICAL
VERT	VERTICAL
H/	WITH
W/O	WITHOUT

vhb.com

225 E. Robinson Street
Suite 300
Orlando, FL 32801
407.839.4006
Certificate of Authorization
Number FL #3932

Westport Reserve (Phase 2B)

City of Port Orange, Florida

No.	Revision	Date	Appvd.
1	Per Port Orange DRC Comments	5/12/16	
2	Per Port Orange P&Z Comments	7/01/16	

Designed by ST | Checked by CB

Issued for | Date Jan. 12, 2016

Not Approved for Construction

Drawing Title
General Notes

Drawing Number
L-000

Sheet of

Christopher J. Brown
LA 0000703
DATE: Jul. 01, 2016

Project Number
62444.00

\\vhb\proj\Orlando\62444.00 Emerson-Coquina Cove\cad\d\Planset\Westport Single-Family\62444.00-WP_LA-Hardscape Overall Site Plan.dwg

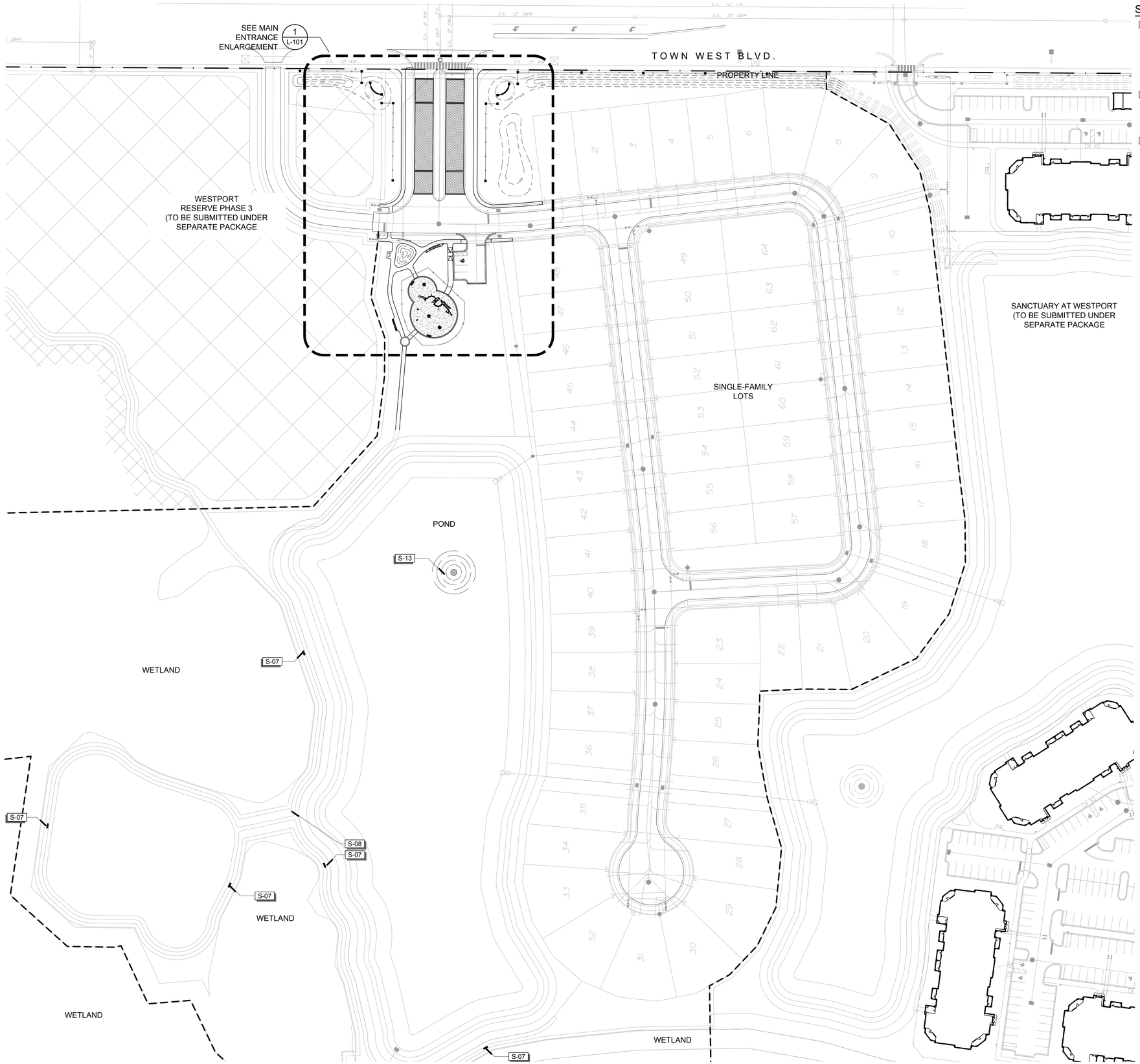

SITE FURNISHING SCHEDULE

S-07
MATERIAL: 6' BENCH
PRODUCT # :HORIZON BENCH (#LBCBR)
MANUFACTURER: ANOVA FURNISHINGS
SIZE: 33-"H x75"L
COLOR: PEWTER
FINISH: POWDER COATED STEEL
CONTACT: WWW.ANOVAFURNISHINGS.COM
NOTES: INSTALL PER MANUFACTURER`S RECOMMENDATIONS

S-08
MATERIAL: PET WASTE STATION
MANUFACTURER: DOGIPOT
WWW.BYOPLAYGROUND.COM
PRODUCT: ALUMINUM PET STATION (#1003-L)
NOTES: INSTALL PER MANUFACTURER`S RECOMMENDATION

S-13
MATERIAL: FLOATING FOUNTAIN
PRODUCT #: THE DAWSON (OR APPROVED EQUAL)
MANUFACTURER: WESCO FOUNTAINS
SIZE: T.B.D.
CONTACT: WWW.WESCOFOUNTAINS.COM
NOTES: INSTALL PER MANUFACTURER`S RECOMMENDATIONS

N

60 0 60 120
SCALE IN FEET

vhb.com
225 E. Robinson Street
Suite 300
Orlando, FL 32801
407.839.4006
Certificate of Authorization
Number FL #3932

Westport Reserve (Phase 2B)

City of Port Orange, Florida

No.	Revision	Date	Appvd.
1	Per Port Orange DRC Comments	5/12/16	
2	Per Port Orange P&Z Comments	7/01/16	

Designed by ST
Checked by CB
Issued for
Date Jan. 12, 2016

Not Approved for Construction

Drawing Title
Overall Site Plan

Drawing Number
L-100

Sheet of

Christopher J. Brown
LA 0000703
DATE: Jul. 01, 2016

Project Number
62444.00

Saved Friday, July 01, 2016 1:33:53 PM STOFTE Plotted Friday, July 01, 2016 1:39:50 PM Tofte, Shawn

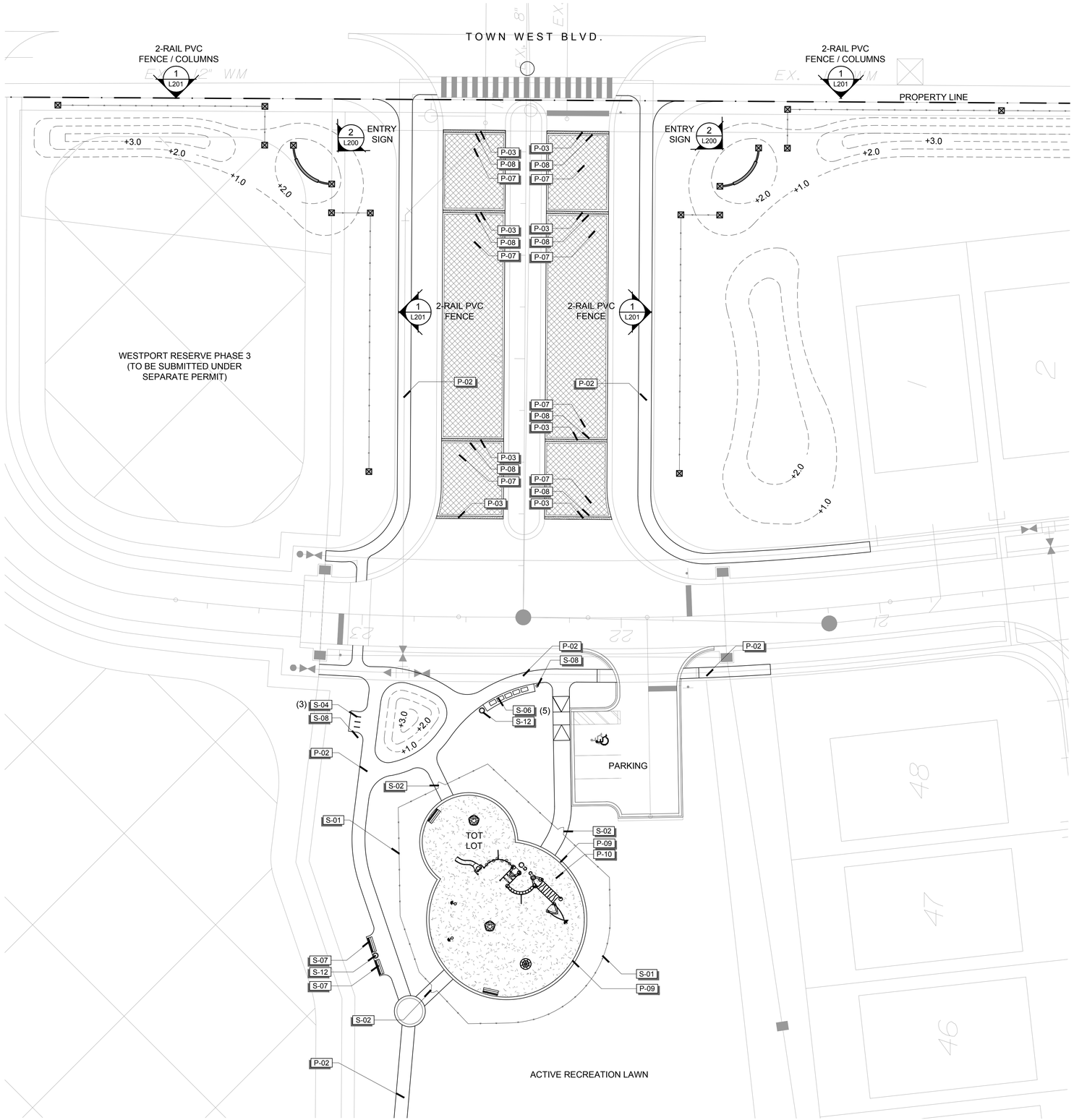

① MAIN ENTRANCE AND NEIGHBORHOOD PARK HARDSCAPE PLAN

1" = 20'-0"

HARDSCAPE SCHEDULE

P-02
MATERIAL: REINFORCED CONCRETE (PEDESTRIAN GRADE)
SIZE: 4" REINFORCED CONCRETE (SEE CIVIL PLANS)
COLOR: NATURAL
PATTERN: CONTROL/EXPANSION JTS. AS REQUIRED
SEE HARDSCAPE NOTES
FINISH: LIGHT BROOM

P-03
MATERIAL: 12" CONCRETE BAND
SIZE: 9" REINFORCED CONCRETE (SEE DETAIL)
COLOR: NATURAL
PATTERN: SCORE JOINTS AS REQUIRED;
SEE LANDSCAPE NOTES
FINISH: LIGHT BROOM

P-07
MATERIAL: VEHICULAR COLOR CONCRETE PAVERS
MANUFACTURER: TREMRON, INC.
WWW.TREMRON.COM
SIZE: 4"X8"
COLOR: T.B.D.
PATTERN: T.B.D.

P-08
MATERIAL: VEHICULAR COLOR CONCRETE PAVERS
MANUFACTURER: TREMRON, INC.
WWW.TREMRON.COM
SIZE: 4"X8"
COLOR: T.B.D.
PATTERN: SOLDIER COURSE (SINGLE)

P-09
MATERIAL: 12" CONCRETE BAND
SIZE: 9" REINFORCED CONCRETE (SEE DETAIL)
COLOR: NATURAL
PATTERN: SCORE JOINTS AS REQUIRED;
SEE LANDSCAPE NOTES
FINISH: MED. ROCK SALT FINISH

P-10
MATERIAL: WOOD PLAYGROUND MULCH
PRODUCT #: BYO-510Z
DESCRIPTION: ENGINEERED WOOD FIBER
MANUFACTURER: BYO PLAYGROUND
SIZE: N/A
COLOR: NATURAL

SITE FURNISHING SCHEDULE

S-01
MATERIAL: 3`-0" ALUMINUM PARK FENCE
W/ 3" ROUND TOP CAP
MANUFACTURER: BARFIELD FENCE OR APPROVED EQUAL
SIZE: 3`-0" HEIGHT
COLOR: BLACK
FINISH: POWDERCOAT BLACK

S-02
MATERIAL: PARK GATE
MANUFACTURER: BARFIELD FENCE
SIZE: 36" HEIGHT
COLOR: BLACK
FINISH: POWDERCOAT BLACK

S-04
MATERIAL: BIKE RACK
PRODUCT # : CAPITAL BIKE RACK
MANUFACTURER: FORMS-SURFACES
SIZE: 34"H x 5"W
COLOR: PEWTER
FINISH: POWDER COATED STEEL
CONTACT: WWW.FORMS-SURFACES.COM
NOTES: INSTALL PER MANUFACTURER`S RECOMMENDATIONS

S-06
MATERIAL: MAIL KIOSK
PRODUCT # : SALSBURY REGENCY DECORATIVE CBU
(#3316R)
MANUFACTURER: SALSBURY INDUSTRY
SIZE: 71"H x 31"W x 18.5"D
COLOR: BLACK
FINISH: POWDER COATED STEEL
CONTACT: WWW.MAILBOXES.COM
NOTES: INSTALL PER MANUFACTURER`S RECOMMENDATIONS

S-07
MATERIAL: 6` BENCH
PRODUCT # :DUMOR 160 SERIES
MANUFACTURER: DUMOR, INC.
SIZE: 32"H x73"L
COLOR: BLACK
FINISH: POWDER COATED STEEL
CONTACT: WWW.DUMOR.COM
NOTES: INSTALL PER MANUFACTURER`S RECOMMENDATIONS

S-08
MATERIAL: PET WASTE STATION
MANUFACTURER: DOGIPOT
WWW.BYOPLAYGROUND.COM
PRODUCT: ALUMINUM PET STATION (#1003-L)
NOTES: INSTALL PER MANUFACTURER`S RECOMMENDATION

S-12
MATERIAL: TRASH RECEPTACLE
PRODUCT # :DUMOR 429-32 FTO
MANUFACTURER: DUMOR, INC.
SIZE: 35"H x20"D
COLOR: BLACK
FINISH: POWDER COATED STEEL
CONTACT: WWW.DUMOR.COM
NOTES: INSTALL PER MANUFACTURER`S RECOMMENDATIONS

N

20 0 20 40
SCALE IN FEET

vhb.com
225 E. Robinson Street
Suite 300
Orlando, FL 32801
407.839.4006
Certificate of Authorization
Number FL #3932

Westport Reserve (Phase 2B)

City of Port Orange, Florida

No.	Revision	Date	Appvd.
1	Per Port Orange DRC Comments	5/12/16	
2	Per Port Orange P&Z Comments	7/01/16	

Designed by ST
Checked by CB
Issued for
Date Jan. 12, 2016

Not Approved for Construction

Drawing Title
Hardscape Plan

Drawing Number
L-101

Sheet of

Christopher J. Brown
LA 0000703
DATE: Jul. 01, 2016

Project Number
62444.00

Saved Friday, July 01, 2016 1:31:51 PM STOFTE Plotted Friday, July 01, 2016 1:40:55 PM Tofte, Shawn

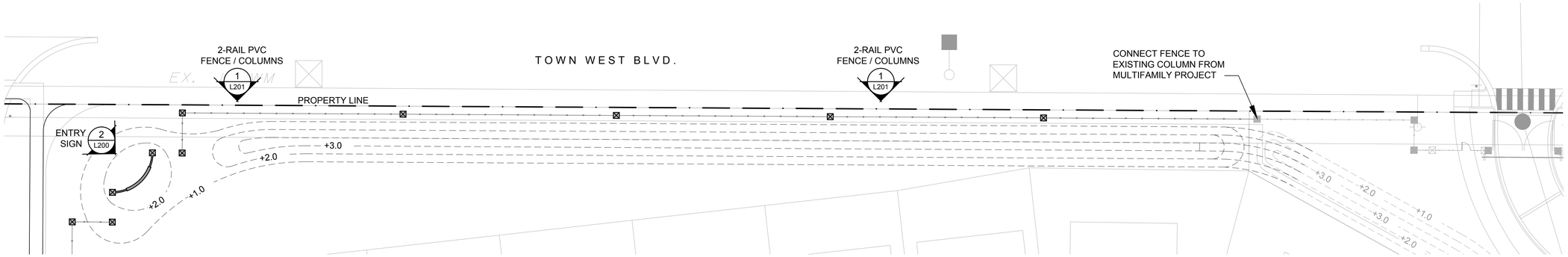

① 2-RAIL PVC FENCE / COLUMNS ALONG TOWN WEST BLVD.

1" = 20'-0"

N

20 0 20 40

SCALE IN FEET

vhb.com

225 E. Robinson Street
Suite 300
Orlando, FL 32801
407.839.4006
Certificate of Authorization
Number FL #3932

Westport Reserve (Phase 2B)

City of Port Orange, Florida

No.	Revision	Date	Appvd.
1	Per Port Orange DRC Comments	5/12/16	
2	Per Port Orange P&Z Comments	7/01/16	

Designed by ST
Checked by CB
Issued for
Date Jan. 12, 2016

Not Approved for Construction

Drawing Title
Hardscape Plan

Drawing Number
L-102

Sheet of

Christopher J. Brown
LA 0000703
DATE: Jul. 01, 2016

Project Number
62444.00

Saved Friday, July 01, 2016 1:31:51 PM STOFTE Plotted Friday, July 01, 2016 1:40:58 PM Toftes, Shawn

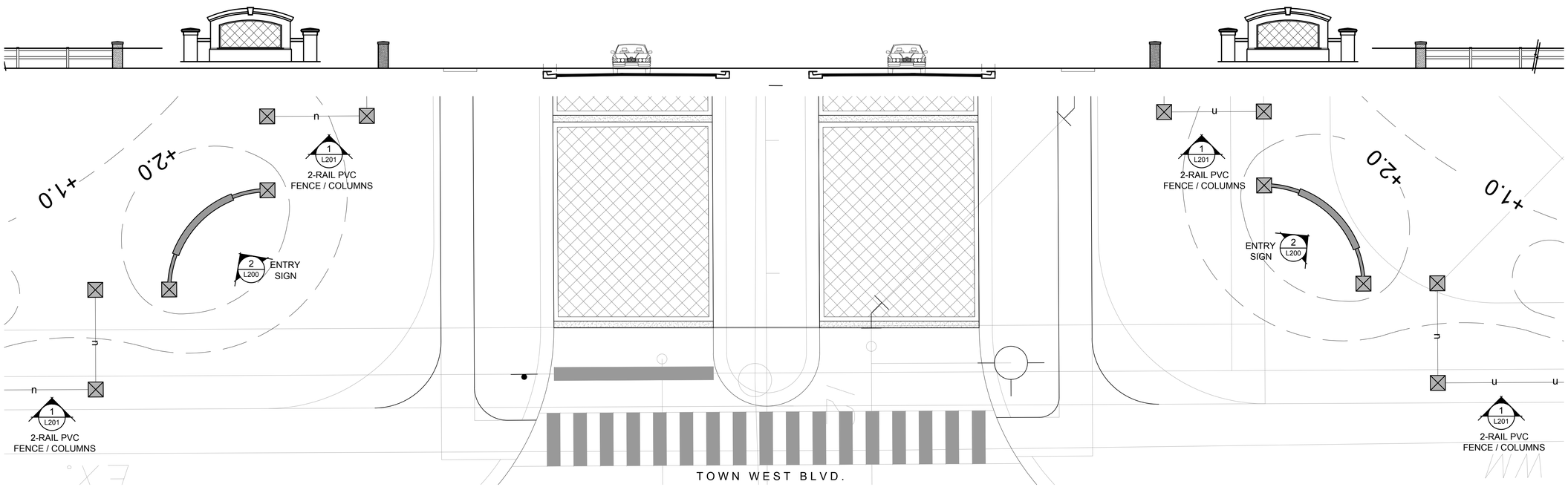

① MAIN ENTRANCE ENLARGEMENT

3/16" = 1'-0"

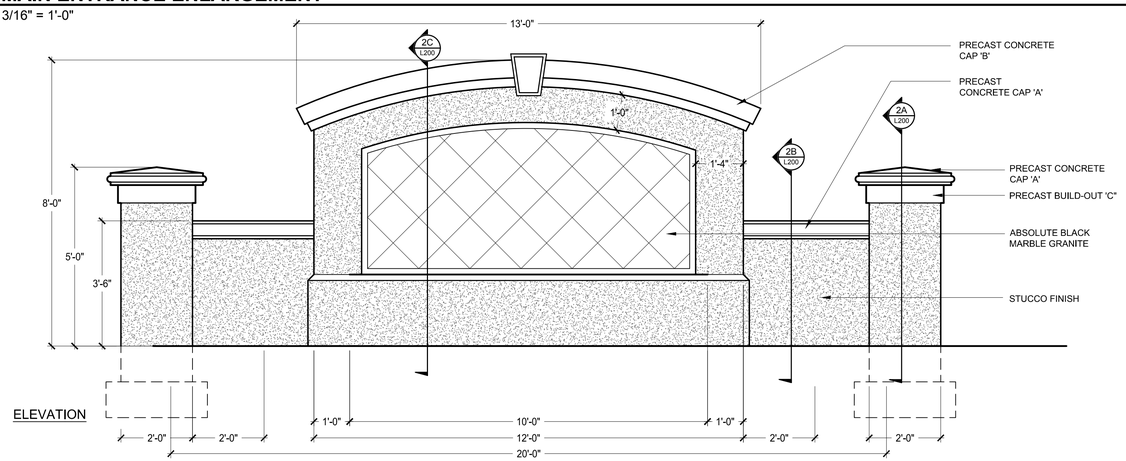

ELEVATION

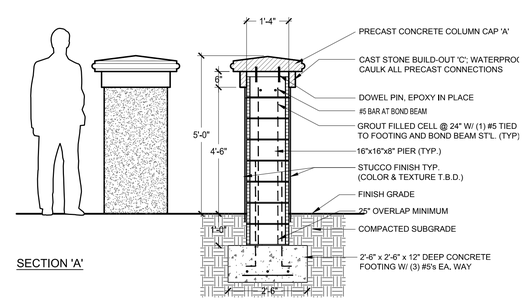

SECTION 'A'

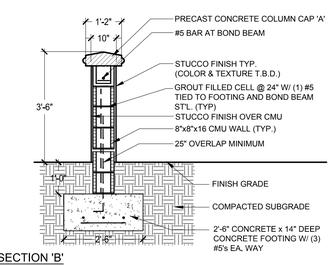

SECTION 'B'

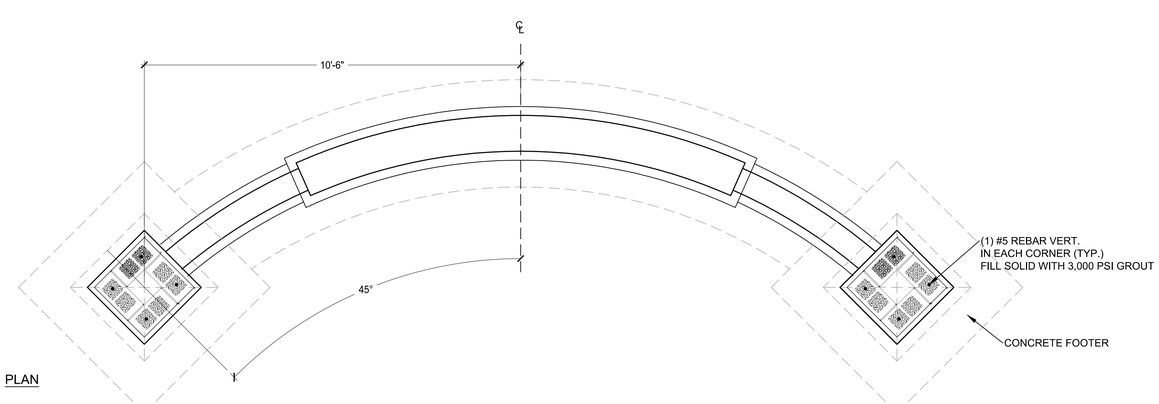

PLAN

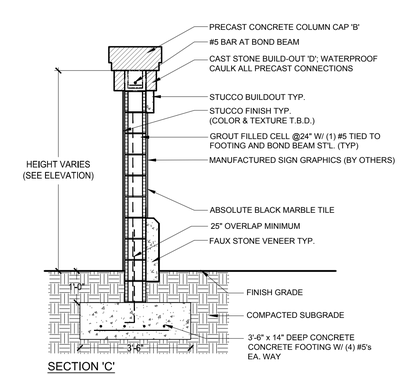

SECTION 'C'

② 8'-0" SIGN WALL

1/2" = 1'-0"

vhb.com

225 E. Robinson Street
Suite 300
Orlando, FL 32801
407.839.4006
Certificate of Authorization
Number FL #3932

NOTES:

1. STRUCTURAL INFORMATION IS PROVIDED FOR CONTRACTOR PRICING ONLY (NOT APPROVED FOR CONSTRUCTION)
2. ALL CELLS WITH VERT. REINFORCING SHALL BE FILLED SOLID WITH GROUT, 3,000 PSI.
3. PRIOR TO FOUNDATION CONSTRUCTION, SOILS SHALL BE DEWATERED TO A MINIMUM 2'-0" BELOW THE PROPOSED FOUNDATION AS REQUIRED.
4. SUBGRADE SOILS SHALL BE COMPACTED 2'-0" BELOW THE BOTTOM OF FOUNDATIONS TO AT LEAST 95% OF THE MODIFIED PROCTOR TEST MAXIMUM DRY DENSITY (ASTM D1557).
5. CONTRACTOR SHALL PROVIDE GEOTECHNICAL SOIL TESTING TO DETERMINE ALLOWABLE BEARING PRESSURES OF AT LEAST 1,000 PSF, TYPICAL, FOR PROPOSED NEW SITE STRUCTURES.
6. ALL SIGNAGE TO COMPLY WITH CHAPTER 15 OF THE PORT ORANGE LAND DEVELOPMENT CODE
7. SIGNAGE TO BE SUBMITTED UNDER SEPARATE PERMIT.

Westport Reserve (Phase 2B)

City of Port Orange, Florida

No.	Revision	Date	Appvd.
1	Per Port Orange DRC Comments	5/12/16	
2	Per Port Orange P&Z Comments	7/01/16	

Designed by: ST
Checked by: CB
Issued for
Date: Jan. 12, 2016

Not Approved for Construction

Drawing Title
Hardscape Details

Drawing Number
L-200

Sheet of

Christopher J. Brown
LA 0000703
DATE: Jul. 01, 2016

Project Number
62444.00

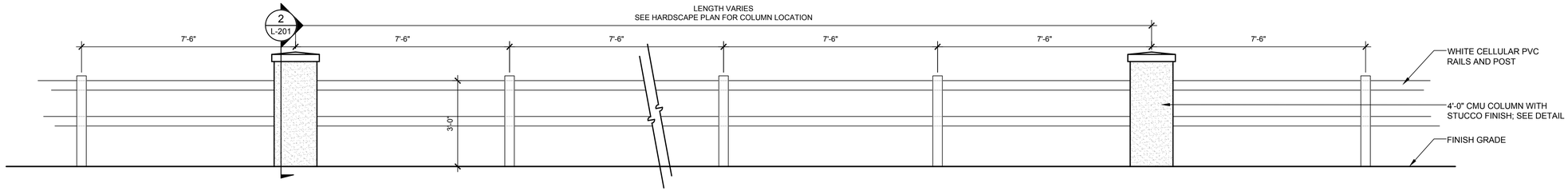

ELEVATION

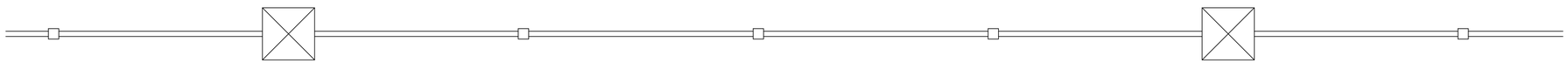

PLAN

1 2-RAIL PVC FENCE
1/2" = 1'-0"

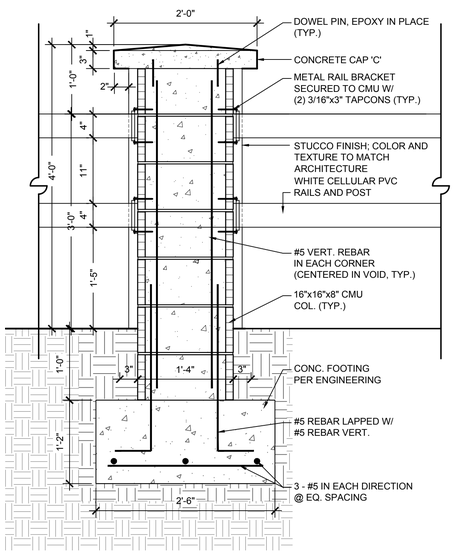

2 4'-0" COLUMN WITH PVC RAILS
1" = 1'-0"

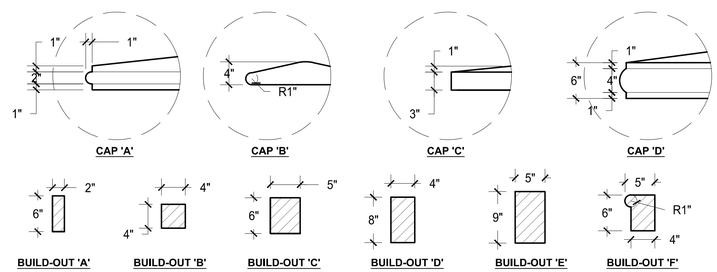

3 PRECAST CONCETE CAPS & BUILD-OUTS
1" = 1'-0"

vhb.com
225 E. Robinson Street
Suite 300
Orlando, FL 32801
407.839.4006
Certificate of Authorization
Number FL #3932

NOTES:

1. STRUCTURAL INFORMATION IS PROVIDED FOR CONTRACTOR PRICING ONLY (NOT APPROVED FOR CONSTRUCTION)
2. ALL CELLS WITH VERT. REINFORCING SHALL BE FILLED SOLID WITH GROUT, 3,000 PSI.
3. PRIOR TO FOUNDATION CONSTRUCTION, SOILS SHALL BE DEWATERED TO A MINIMUM 2'-0" BELOW THE PROPOSED FOUNDATION AS REQUIRED.
4. SUBGRADE SOILS SHALL BE COMPACTED 2'-0" BELOW THE BOTTOM OF FOUNDATIONS TO AT LEAST 95% OF THE MODIFIED PROCTOR TEST MAXIMUM DRY DENSITY (ASTM D1557).
5. CONTRACTOR SHALL PROVIDE GEOTECHNICAL SOIL TESTING TO DETERMINE ALLOWABLE BEARING PRESSURES OF AT LEAST 1,000 PSF, TYPICAL, FOR PROPOSED NEW SITE STRUCTURES.
6. ALL SIGNAGE TO COMPLY WITH CHAPTER 15 OF THE PORT ORANGE LAND DEVELOPMENT CODE
7. SIGNAGE TO BE SUBMITTED UNDER SEPARATE PERMIT.

Westport Reserve (Phase 2B)

City of Port Orange, Florida

No.	Revision	Date	Appvd.
1	Per Port Orange DRC Comments	5/12/16	
2	Per Port Orange P&Z Comments	7/01/16	

Designed by ST
Checked by CB
Issued for
Date Jan. 12, 2016

Not Approved for Construction

Drawing Title
Hardscape Details

Drawing Number
L-201

Sheet of

Christopher J. Brown
LA 0000703
DATE: Jul. 01, 2016

Project Number
62444.00

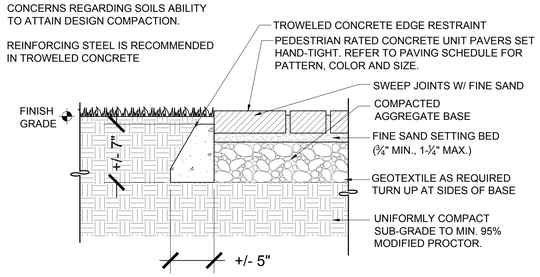

1 PEDESTRIAN PAVER WITH EDGE RESTRAINT
1-1/2" = 1'-0"

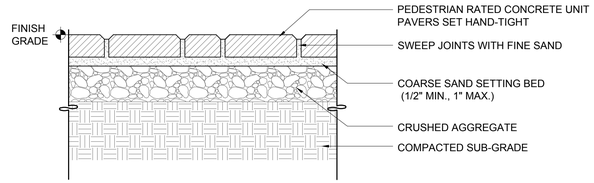

2 TYPICAL PEDESTRIAN PAVER
1-1/2" = 1'-0"

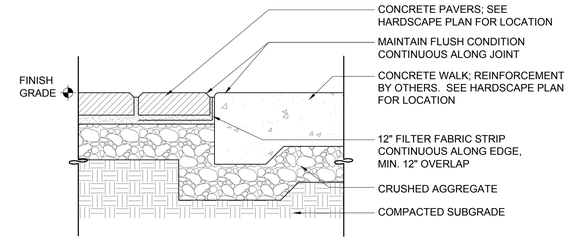

3 PEDESTRIAN PAVER / CONCRETE INTERFACE
1-1/2" = 1'-0"

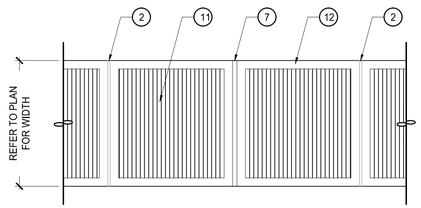

A CONCRETE FINISH (N.T.S.)

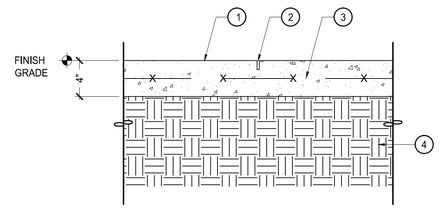

B CONTROL JOINT

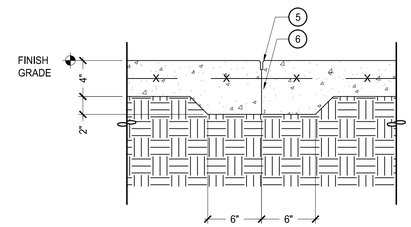

C CONSTRUCTION JOINT

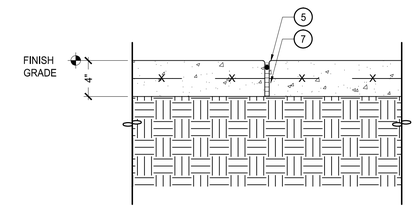

D EXPANSION JOINT

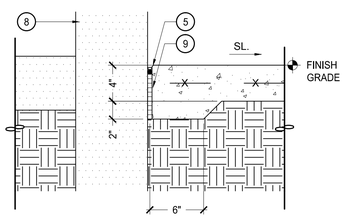

E ISOLATION JOINT

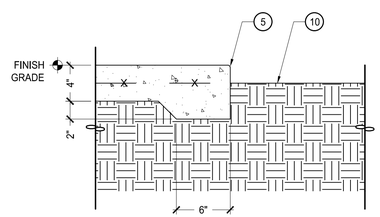

F EDGE CONDITION

KEY

1. CAST-IN-PLACE CONCRETE. REFER TO HARDSCAPE PLAN FOR COLOR AND FINISH.
2. 1/4" SAWCUT CONTROL JOINT, 1" DEEP TYP. ALL SAW CUTS SHOULD BE MADE WITHIN 72 HOURS OF INSTALLATION.
3. CONCRETE REINFORCING BY OTHERS
4. COMPACTED SUB-GRADE
5. 1/4" TOOLED RADIUS
6. APPLY BOND BREAKER TO CURED / EXISTING SURFACE
7. 1/2" FULL DEPTH EXPANSION JOINT WITH BACKER ROD AND SEALANT, JOINT SEALANT COLOR TO MATCH ADJ. PAVING
8. VERTICAL ELEMENT (CONTRACTOR IS RESPONSIBLE FOR PROTECTING ADJACENT SURFACES)
9. 3/8" FULL DEPTH EXPANSION JOINT WITH BACKER ROD AND SEALANT, JOINT SEALANT COLOR TO MATCH ADJ. PAVING
10. ADJACENT PLANTING AREA, HOLD GRADE 2" BELOW FINISH ELEVATION OF PAVING, SLOPE AWAY FROM PAVING.
11. MEDIUM BROOM CONCRETE FINISH
12. TROWELED EDGE

NOTE:
1. CONTRACTOR IS REQUIRED TO PROVIDE A 48"x48" MOCK-UP PANEL FOR OWNER APPROVAL.
2. REFER TO PAVING SCHEDULE ON HARDSCAPE SHEETS FOR ADDITIONAL INFORMATION ON CONCRETE PAVING COLOR AND FINISH.
3. MAXIMUM SURFACE AREA BETWEEN CONTROL JOINTS SHALL NOT EXCEED 100 SQ. FT.
4. MAXIMUM SURFACE AREA BETWEEN EXPANSION JOINTS SHALL NOT EXCEED 400 SQ. FT.
5. CONTRACTOR SHALL PROVIDE ISOLATION JOINTS BETWEEN CONCRETE PAVEMENT AND ALL FIXED VERTICAL SITE ELEMENTS, INCLUDING BUT NOT LIMITED TO, BUILDINGS, WALLS, CURBS, STEPS AND CHEEK WALLS, LIGHT POLE FOUNDATIONS, GRAPHIC ELEMENT FOUNDATIONS, ETC.

4 TYPICAL PEDESTRIAN PAVING
N.T.S.

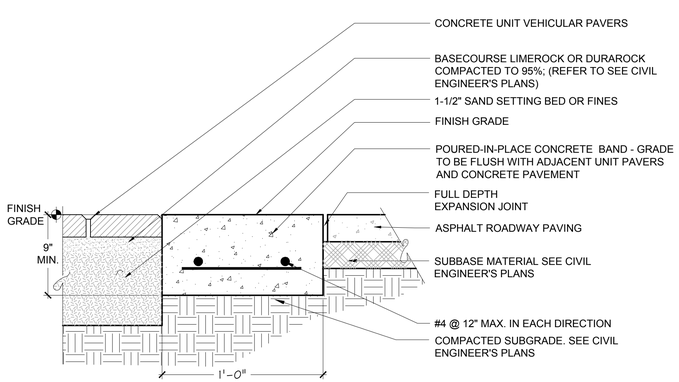

5 CONCRETE BANDING AT CROSSWALKS
1-1/2" = 1'-0"

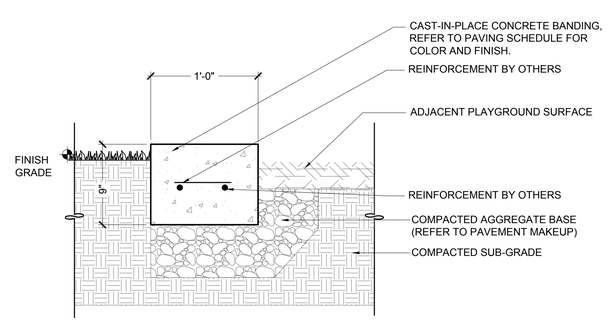

6 CONCRETE BANDING AT PLAYGROUND
1-1/2" = 1'-0"

vhb.com
225 E. Robinson Street
Suite 300
Orlando, FL 32801
407.839.4006
Certificate of Authorization
Number FL #3932

NOTES:
1. STRUCTURAL INFORMATION IS PROVIDED FOR CONTRACTOR PRICING ONLY (NOT APPROVED FOR CONSTRUCTION)
2. ALL CELLS WITH VERT. REINFORCING SHALL BE FILLED SOLID WITH GROUT, 3,000 PSI.
3. PRIOR TO FOUNDATION CONSTRUCTION, SOILS SHALL BE DEWATERED TO A MINIMUM 2'-0" BELOW THE PROPOSED FOUNDATION AS REQUIRED.
4. SUBGRADE SOILS SHALL BE COMPACTED 2'-0" BELOW THE BOTTOM OF FOUNDATIONS TO AT LEAST 95% OF THE MODIFIED PROCTOR TEST MAXIMUM DRY DENSITY (ASTM D1557).
5. CONTRACTOR SHALL PROVIDE GEOTECHNICAL SOIL TESTING TO DETERMINE ALLOWABLE BEARING PRESSURES OF AT LEAST 1,000 PSF, TYPICAL, FOR PROPOSED NEW SITE STRUCTURES.
6. ALL SIGNAGE TO COMPLY WITH CHAPTER 15 OF THE PORT ORANGE LAND DEVELOPMENT CODE
7. SIGNAGE TO BE SUBMITTED UNDER SEPARATE PERMIT.

Westport Reserve (Phase 2B)

City of Port Orange, Florida

No.	Revision	Date	Appvd.
1	Per Port Orange DRC Comments	5/12/16	
2	Per Port Orange P&Z Comments	7/01/16	

Designed by ST
Checked by CB
Issued for
Date Jan. 12, 2016

Not Approved for Construction

Drawing Title
Hardscape Details

Drawing Number
L-202

Sheet of

Christopher J. Brown
LA 0000703
DATE: Jul. 01, 2016

Project Number
62444.00

6'-0" BENCH
(SEE HARDSCAPE PLAN FOR COLOR AND TYPE)

1 6'-0" BENCH AND TRASH RECEPTACLE
N.T.S.

BIKE RACK
(SEE HARDSCAPE PLAN FOR COLOR AND TYPE)

2 BIKE RACK
N.T.S.

DOGIPOT STATION
(SEE HARDSCAPE PLAN FOR COLOR AND TYPE)

3 DOGIPOT STATION
N.T.S.

FLOATING FOUNTAIN
SEE HARDSCAPE PLAN FOR SIZE & TYPE

4 FLOATING FOUNTAIN
N.T.S.

FLYWHEEL SPINNER
MODEL #185927

CHITTERCHATTER TALK TUBE KIT
MODEL #164177

SNAIL SPRING RIDER
MODEL # 800-LT

THE TOPSYTURNY® SPINNER
MODEL #205800

PLAYGROUND STRUCTURE (AGES (5-12)
MODEL #DELANO CENTRAL PARK

5 PLAYGROUND AMENITIES (OR APPROVED EQUAL)
N.T.S.

All Aluminum Construction SALSBURY

DECORATIVE MAILBOX CBU
(SEE HARDSCAPE PLAN FOR COLOR AND TYPE)

6 DECORATIVE MAILBOX CBU
N.T.S.

vhb.com
vhb
225 E. Robinson Street
Suite 300
Orlando, FL 32801
407.839.4006
Certificate of Authorization
Number FL #3932

Westport Reserve (Phase 2B)

City of Port Orange, Florida

No.	Revision	Date	Appvd.
1	Per Port Orange DRC Comments	5/12/16	
2	Per Port Orange P&Z Comments	7/01/16	

Designed by ST
Checked by CB
Issued for
Date Jan. 12, 2016

Not Approved for Construction

Drawing Title
Hardscape Details

Drawing Number
L-203

Sheet of

Christopher J. Brown
LA 0000703
DATE: Jul. 01, 2016

Project Number
62444.00

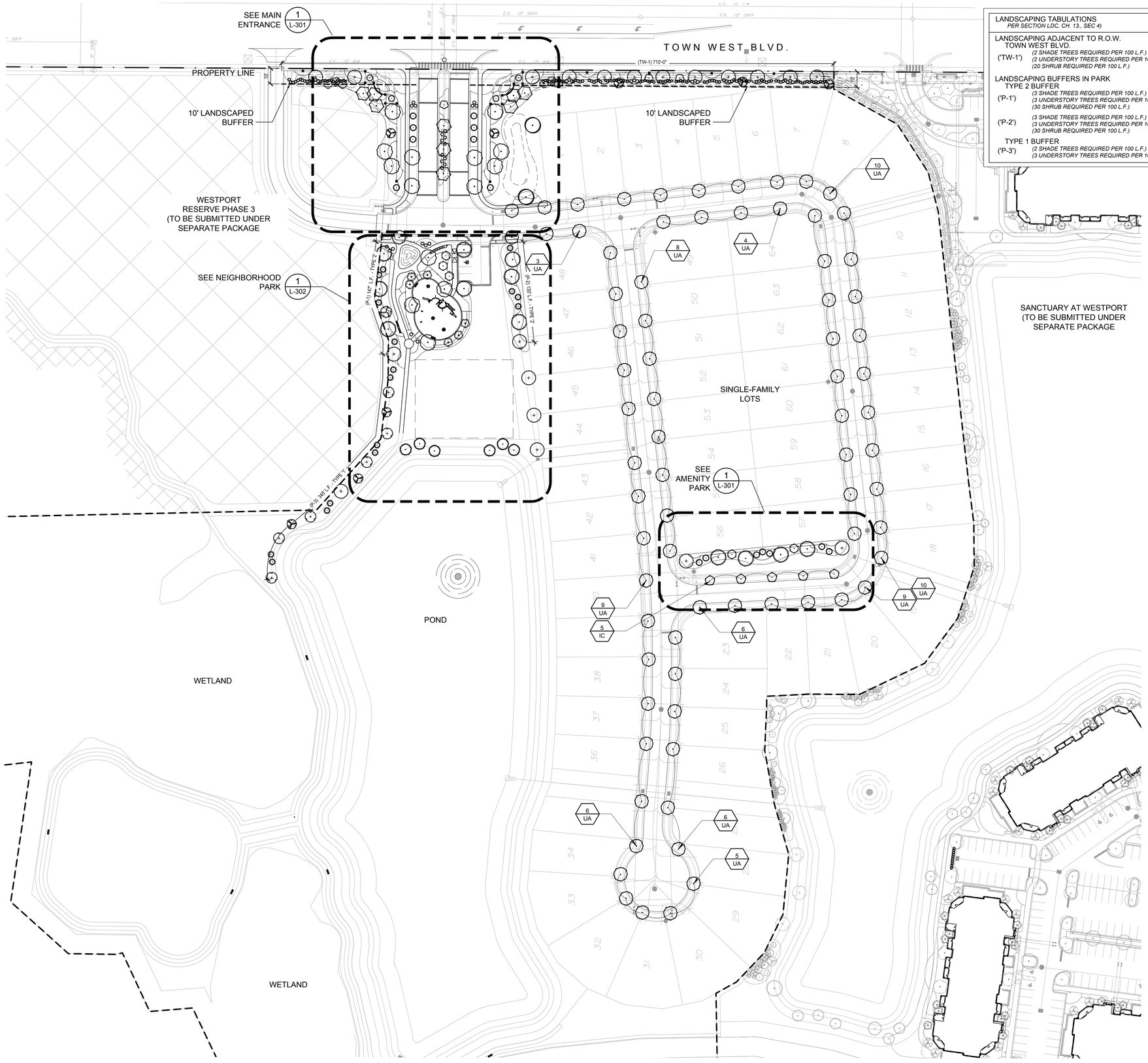

LANDSCAPING TABULATIONS *PER SECTION LDC, CH. 13., SEC 4)*			
LANDSCAPING ADJACENT TO R.O.W. TOWN WEST BLVD.			
('TW-1')	*(2 SHADE TREES REQUIRED PER 100 L.F.)*	710 L.F.	*15 TREES* / *26 TREES*
	(2 UNDERSTORY TREES REQUIRED PER 100 L.F.)		*15 TREES* / *15 TREES*
	(20 SHRUB REQUIRED PER 100 L.F.)		*142 SHRUBS* / *> 350 SHRUBS*
LANDSCAPING BUFFERS IN PARK			
TYPE 2 BUFFER			
('P-1')	*(3 SHADE TREES REQUIRED PER 100 L.F.)*	147 L.F.	*5 TREES* / *8 TREES*
	(3 UNDERSTORY TREES REQUIRED PER 100 L.F.)		*5 TREES* / *5 TREES*
	(30 SHRUB REQUIRED PER 100 L.F.)		*45 SHRUBS* / *> 350 SHRUBS*
('P-2')	*(3 SHADE TREES REQUIRED PER 100 L.F.)*	130 L.F.	*4 TREES* / *4 TREES*
	(3 UNDERSTORY TREES REQUIRED PER 100 L.F.)		*4 TREES* / *4 TREES*
	(30 SHRUB REQUIRED PER 100 L.F.)		*39 SHRUBS* / *> 350 SHRUBS*
TYPE 1 BUFFER			
('P-3')	*(2 SHADE TREES REQUIRED PER 100 L.F.)*	345 L.F.	*7 TREES* / *7 TREES*
	(3 UNDERSTORY TREES REQUIRED PER 100 L.F.)		*11 TREES* / *11 TREES*

STREET TREE SCHEDULE

TREES	COMMON NAME	BOTANICAL NA
IC	Dahoon Holly	Ilex cassine
UA	Winged Elm	Ulmus alata

N

60 0 60 120
SCALE IN FEET

vhb.com
225 E. Robinson Street
Suite 300
Orlando, FL 32801
407.839.4006
Certificate of Authorization
Number FL #3932

Westport Reserve (Phase 2B)

City of Port Orange, Florida

No.	Revision	Date	Appvd.
1	Per Port Orange DRC Comments	5/12/16	
2	Per Port Orange P&Z Comments	7/01/16	

Designed by ST
Checked by CB
Issued for
Date Jan. 12, 2016

Not Approved for Construction

Drawing Title
Overall Landscape Planting Plan

Drawing Number
L-300

Sheet of

Christopher J. Brown
LA 0000703
DATE Jul. 01, 2016

Project Number
62444.00

\\vhb\proj\Orlando\62444.00 Emerson-Coquina Cove\cad\d\Planset\Westport Single-Family\62444.00-WP_LA-Landscape Plans.dwg

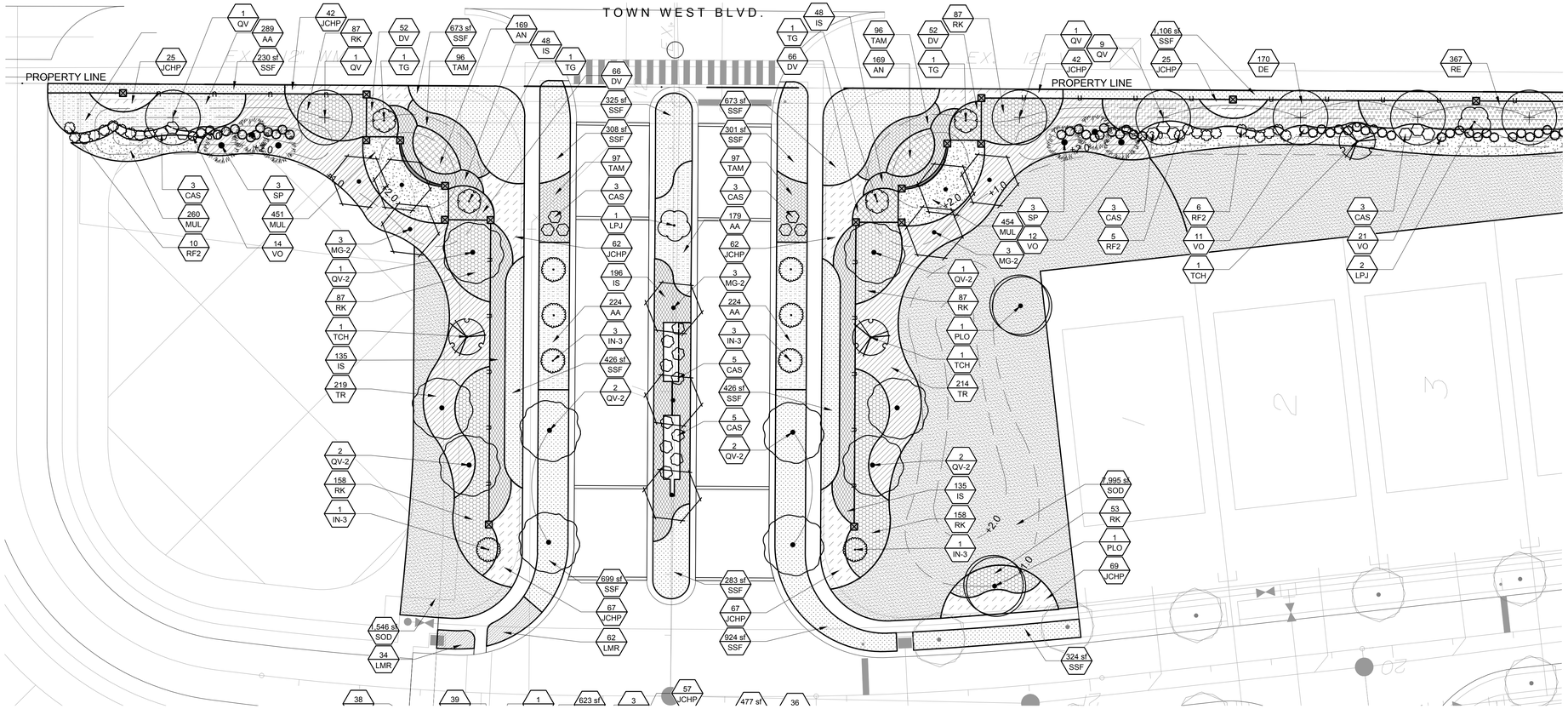

① MAIN ENTRANCE LANDSCAPE PLAN
1" = 20'-0"

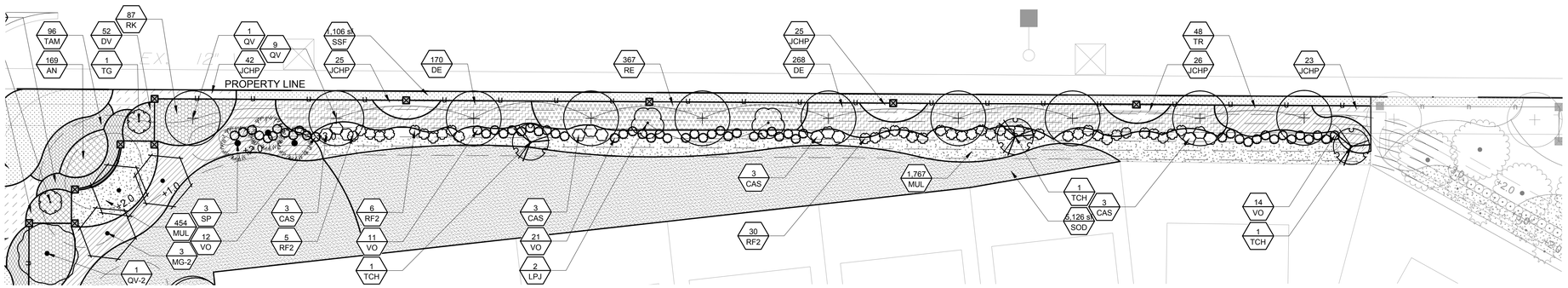

② TOWN WEST BLVD. BUFFER LANDSCAPE PLAN
1" = 20'-0"

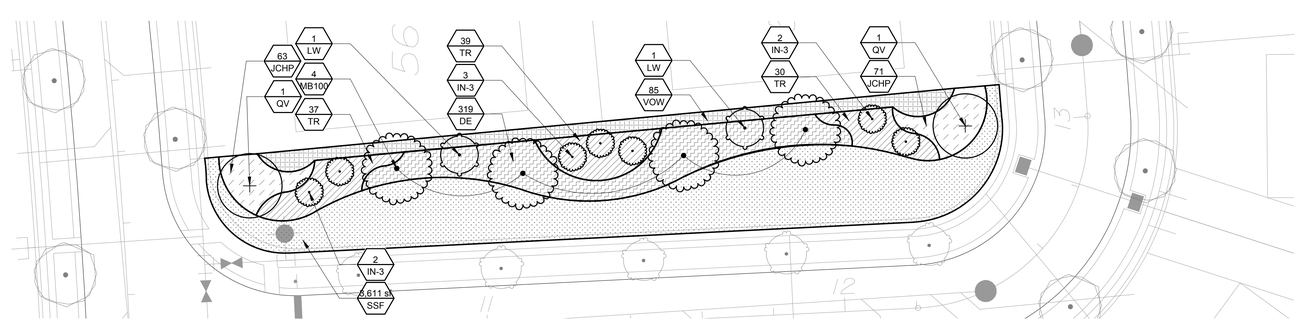

③ NEIGHBORHOOD PARK LANDSCAPE PLAN
1" = 20'-0"

PLANTING SCHEDULE

TREES	COMMON NAME
ARF	Florida Flame Red Maple
IN-3	Nellie R. Stevens Holly
JVS3	Southern Red Cedar
LN65	Natchez Crape Myrtle
LW	Watermelon Red Crape Myrtle
LPJ	Japanese Privet
MB100	Brackens Southern Magnolia
MG-2	D.D. Blanchard Southern Magnolia
PLO	American Sycamore
QV	Southern Live Oak
QV-2	Southern Live Oak
SP	Sabal Palm
TCH	Golden Trumpet Tree
TD65	Bald Cypress
TG	Purple Glory Tree
UA	Winged Elm
SHRUBS	**COMMON NAME**
CAS	Crinum Lily
RF2	Fashion Azalea
VO	Walter`s Viburnum
SHRUB AREAS	**COMMON NAME**
AA	Blue Lily of the Nile
AN	Annuals
BU	Orange Bulbine
DV	African Iris
DE	Gold Mound Duranta
HPC	Dwarf Fire Bush
IS	Dwarf Yaupon
JCHP	Parsoni Juniper
LMR	Royal Purple Liriope
RIA	White Indian Hawthorn
RK	Knockout Rose
RE	Firecracker Plant
TAM	Minima Jasmine
TR	Dwarf Fakahatchee Grass
VOW	Walter`s `Withlacoochee`
VS	Sandankwa Viburnum
GROUND COVERS	**COMMON NAME**
MUL	Pine Straw
SOD	Bahia Grass
SSF	`Floratam` St. Augustine Sod

N

20 0 20 40
SCALE IN FEET

vhb.com
vhb
225 E. Robinson Street
Suite 300
Orlando, FL 32801
407.839.4006
Certificate of Authorization
Number FL #3932

Westport Reserve (Phase 2B)

City of Port Orange, Florida

No.	Revision	Date	Appvd.
1	Per Port Orange DRC Comments	5/12/16	
2	Per Port Orange P&Z Comments	7/01/16	

Designed by ST
Checked by CB
Issued for
Date Jan. 12, 2016

Not Approved for Construction

Drawing Title
Landscape Planting Plan

Drawing Number
L-301

Sheet of

Christopher J. Brown
LA 0000703
DATE: Jul. 01, 2016

Project Number
62444.00

Saved Friday, July 01, 2016 1:29:54 PM STOFTE Plotted Friday, July 01, 2016 1:47:33 PM Toffe, Shawn

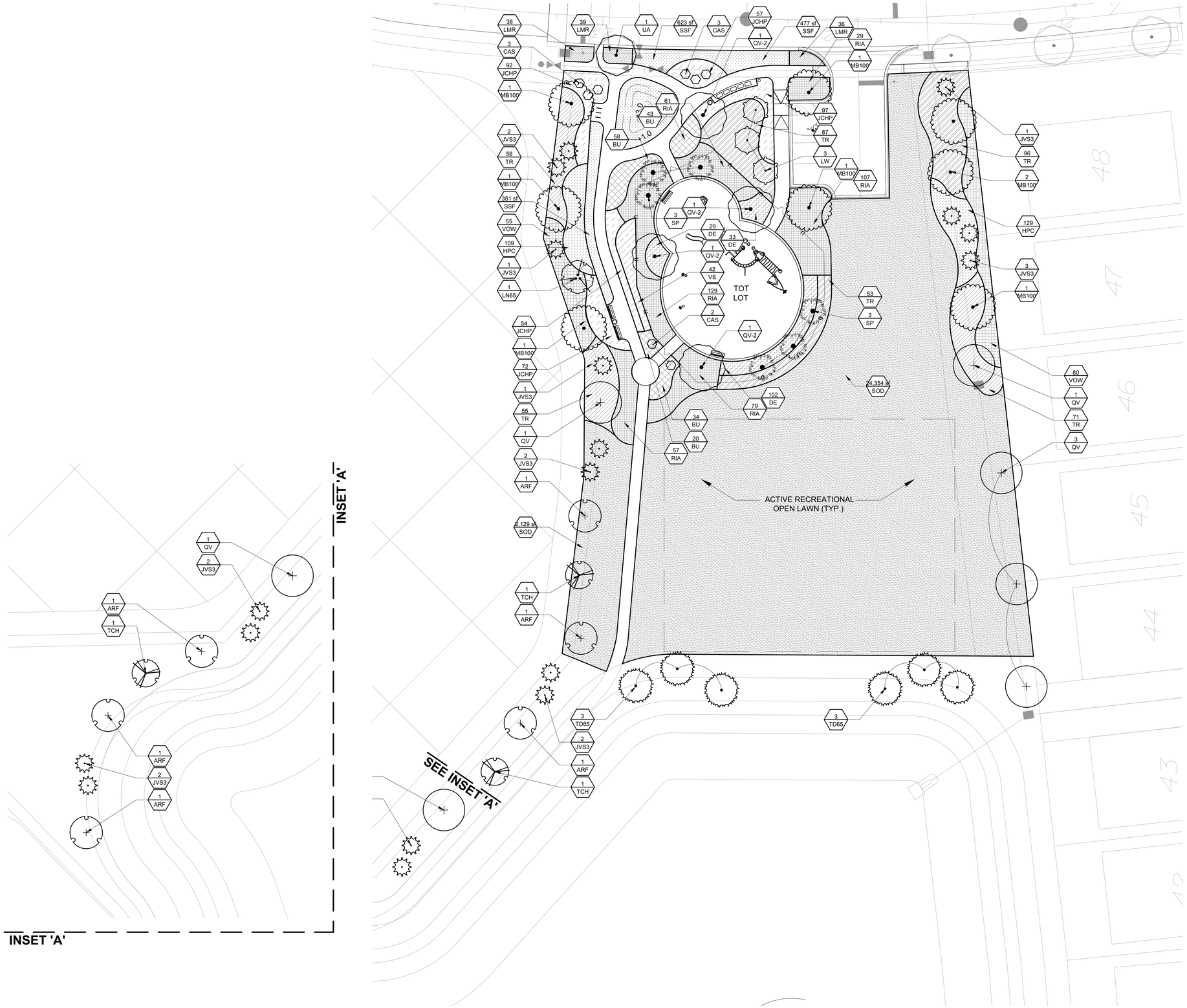

1 AMENITY PARK LANDSCAPE PLAN

1" = 20'-0"

PLANTING SCHEDULE

TREES	COMMON NAME
ARF	Florida Flame Red Maple
IN-3	Nellie R. Stevens Holly
JVS3	Southern Red Cedar
LN65	Natchez Crape Myrtle
LW	Watermelon Red Crape Myrtle
LPJ	Japanese Privet
MB100	Brackens Southern Magnolia
MG-2	D.D. Blanchard Southern Magnolia
PLO	American Sycamore
QV	Southern Live Oak
QV-2	Southern Live Oak
SP	Sabal Palm
TCH	Golden Trumpet Tree
TD65	Bald Cypress
TG	Purple Glory Tree
UA	Winged Elm
SHRUBS	**COMMON NAME**
CAS	Crinum Lily
RF2	Fashion Azalea
VO	Walter`s Viburnum
SHRUB AREAS	**COMMON NAME**
AA	Blue Lily of the Nile
AN	Annuals
BU	Orange Bulbine
DV	African Iris
DE	Gold Mound Duranta
HPC	Dwarf Fire Bush
IS	Dwarf Yaupon
JCHP	Parsoni Juniper
LMR	Royal Purple Liriope
RIA	White Indian Hawthorn
RK	Knockout Rose
RE	Firecracker Plant
TAM	Minima Jasmine
TR	Dwarf Fakahatchee Grass
VOW	Walter`s `Withlacoochee`
VS	Sandankwa Viburnum
GROUND COVERS	**COMMON NAME**
MUL	Pine Straw
SOD	Bahia Grass
SSF	`Floratam` St. Augustine Sod

vhb.com
225 E. Robinson Street
Suite 300
Orlando, FL 32801
407.839.4006
Certificate of Authorization
Number FL #3932

N

20 0 20 40
SCALE IN FEET

Westport Reserve (Phase 2B)

City of Port Orange, Florida

No.	Revision	Date	Appvd.
1	Per Port Orange DRC Comments	5/12/16	
2	Per Port Orange P&Z Comments	7/01/16	

Designed by ST
Checked by CB
Issued for
Date Jan. 12, 2016

Not Approved for Construction

Drawing Title
Landscape Planting Plan

Drawing Number
L-302

Sheet of

Christopher J. Brown
LA 0000703
DATE: Jul. 01, 2016

Project Number
62444.00

Saved Friday, July 01, 2016 2:51:14 PM STOFTE Plotted Friday, July 01, 2016 2:53:23 PM Toffe, Shawn

LANDSCAPE SPECIFICATIONS

GENERAL:

G1) Take responsibility for adhering to all requirements stated as outlined herein and on the landscape drawings.

G2) The scope of work for the landscape contractor for this project shall include the provision of all labor, materials and equipment required to complete all tasks associated with the landscape and irrigation installation as shown on the drawings or noted herein. Take responsibility for coordinating with the general contractor reasonable access to power and potable water sources as required.

G3) Take responsibility to assign a qualified project manager and field supervisor to work directly with the owner's representative and supervise the work at all times through final owner acceptance. It is the contractor's responsibility to ensure that project manager has a complete current set of documents on-site at all times.

G4) The landscape contractor for this project must be able to document a minimum of five (5) years of comparable experience in the installation of plant material for projects of similar scale, intensity and quality. General contractor must submit documentation to owner's representative for approval prior to bid award.

G5) Take responsibility for familiarizing themselves with existing site conditions and notifying the owner's representative in writing of any concerns prior to commencement of work. This evaluation should include, but is not limited to, verification of surface and subsurface utilities, grades, dimensions and soil conditions.

G6) Take responsibility for familiarizing themselves with project plans and scopes of work related to associated trades to be performed by others in order to identify key coordination items including, but not limited to, site access, material storage, scheduling and sequencing of work. Take responsibility for coordinating all site issues with the general contractor.

G7) Take responsibility for the protection of all adjacent work, materials and equipment from damage due to their activities. The landscape contractor shall be solely responsible for any damage or injury to person or property that may occur as a result of the execution of their work.

G8) Take responsibility for the agronomic evaluation of soil characteristics. Evaluation must include chemical analysis by a qualified agricultural soils testing laboratory. Soils sample should be taken immediately following completion of rough grading activities and should be collected at a rate of one sample for each 10,000 square feet of impacted area, or a total of six, whichever is greater. At a minimum the chemical analysis of the soil should consider the following:

A. Percentage of organic matter

B. Salinity

C. ph

D. Lime content

E. Mineral nutrients including concentrations of nitrogen, phosphorous, potassium. Calcium, magnesium, iron, zinc, manganese, copper, sulfur and molybdenum.

F. Potential hazards or impediments for plant growth including salinity, sodium chloride, boron, impaired soil structure or drainage.

G. Sand fraction analysis as a percent passing through 1", 1-1/4" and no. 200 sieves.

H. Percolation rate in inches per hour. The analysis should also include specific recommendations to the owner's representative for any amendments and backfill mixes for optimal plant growth to be made to the soils prior to planting. The contractor should include the cost of this soil testing in their base bid as well as the basic backfill mixes specified herein but should include any anticipated cost for soil amendment. The contractor is to provide the owner's representative with copies of all soil testing results. Submittal documentation must also contain a graphic site plan depicting locations and depth from which each sample was drawn.

G9) Take responsibility for confirming the quantities of each plant material required to adequately cover the area shown on the landscape plans at the prescribed spacing and notifying the owner's representative immediately of any perceived discrepancies for two (2) days prior to planting.

G10) Take responsibility to refer to the following references in determining compliance with best practices:

A. Florida Nurserymen and Grower's Association (FNGA) standards.

B. Florida Turf Grass Association's (FTGA) standards.

C. Florida Department of Agriculture, Bureau of Plant Industry, "Trades and Standards for Nursery Plants", latest edition.

D. "Cabling, Bracing and Guying Standards for Shade Trees" as published by the national arborist association (NAA).

E. ANSI A300 1995 Standards as established by the Tree, Shrub and Other Woody Plant Maintenance Standard Practice.

F. ANSI, Z60.1-American Standard For Nursery Stock.

G. "Standard Plant Names" as established by Hortus III.

G11) The owner's representative reserves the right to defer any and all review responsibilities related to landscape to the project Landscape Architect or other authorized agent.

G12) Take responsibility to grant the owner the following warranty for a period of one year (365 days) from the date of final acceptance for all trees, shrubs and groundcovers. The warranty period for sod shall be six months (180 days). It is understood that the warranty is to be inclusive of all labor, materials and equipment necessary for the replacement of any defective plant materials. Warranty is intended to cover defects and unsatisfactory growth caused by no fault of the owner. During the warranty period the landscape contractor shall make every reasonable effort to replace any dead, dying or diseased material within a period of 15 working days

G13) The plant quantities shown on the landscape contract documents are for the convenience of the landscape contractor. Take responsibility for verifying all quantities and reporting any discrepancies to the landscape architect for clarification prior to contract award and at commencement of work.

G14) Take responsibility to verify the extent of grassing work in the field. The contractor shall be responsible for providing grass in the areas shown on the plan in sufficient quantity to provide full coverage. Additional grass required will be adjusted based on a square footage unit price. Areas to be grassed shall be amended per soils report to provide required nutrients and soil ph of between 6.0 and 7.0.

G15) Take responsibility for providing plants, spaced as specified on the plant list. When installing shrubs in planting beds, spacing of material shall take precedence over quantity of materials indicated for planting areas. Notify landscape architect immediately if such situations arise. Shrub and groundcover spacing is generally indicated on the plant list for all 'mass plantings'. Accent shrubs and trees that are not part of mass plantings shall be spaced as shown on the plans.

PRODUCT:

P1) Take responsibility for confirming the availability of all the specified plant materials within two (2) weeks of project award. All requests for substitution due to lack of availability must be made to the owner's representative in writing within this period. No substitution shall be permitted without prior written approval from the owner's representative. Take responsibility for exhausting all means possible to obtain the materials as specified prior to requesting substitution. In order to be considered by the owner's representative as viable alternates plants must share the same general appearance/ form, installation size, mature size, color, quality and growth habit. Materials must be offered at no additional costs to the owner.

P2) The owner's representative reserves the right to review and approve all plant materials, including sod, at their source nursery with the landscape contractor prior to delivery to the job site. It is the responsibility of the landscape contractor to coordinate and schedule all nursery trips with the landscape architect or owner's representative a minimum of two weeks prior to the schedule date for material delivery for shipping. The landscape contractor is to provide a minimum of one week to the owner's representative for all trips. The owner also reserves the rights to have the nursery review of material or to provide approval through review of photographs or representative samples.

P3) All plant material suppliers, including sod, for this project must be able to document a minimum of five (5) years of experience in the specialization of growing and cultivation of comparable materials as specified for this project. Take responsibility to provide documentation to the owner's representative for approval prior to procuring material.

P4) In preparation for the delivery to the site the landscape contractor shall only prune branches or roots after notifying owner's representative. Pruning should only be preformed as required to assure safe loading, shipping and job site handling. In no case can any tree be topped. Prior to shipping all trees should be sprayed for insects and fungus as well as a foliar anti-dessicant.

P5) Balled and burlap trees should be dug and prepared for shipment in a manner that will not damage roots, branches, shape and future development after planting. Trees should be root pruned 30 days prior to digging and hardened off at the nursery for a minimum of 30 days prior to shipping. In addition to rootball irrigation the nursery should provide overhead mist irrigation for the duration of this period. The product received on-site should have a firm ball with natural soils. Dryed, cracked or broken rootballs will not be accepted. Rootballs should be sized at a minimum dia. ratio of 12" of rootball for each 1" of tree caliper.

P6) Take responsibility for the preparation of soils within all planting areas inclusive of providing all imported soil materials, soil amendments, soil conditioners and fertilizers as required.

P7) Soil preparation is to include the following fertilizer with the understanding that soil mix design may need to be adjusted based on outcome of agronomic testing:

A. Trees, 100% site soil with 5 lb. Milorganite per cu. yd.

B. Shrubs, 100% site soil with Osmocote controlled release fertilizer (17-11-10) per manufacturer's recommendation.

P8) Should owner's representative and contractor agree with the recommendation of the testing agency to further amend the soils the contractor's contract will be adjusted accordingly. The contractor shall be required to submit samples of amended soils to be re-tested to confirm compliance with recommendations following the same procedures as the original tests.

P9) Take responsibility to provide the owner's representative with one quart, sealed and labeled bag of soil from same location that test samples here drawn. The owner reserves the right to obtain secondary analysis to confirm test results at their expense.

P10) Take responsibility to provide the owner's representative with one quart sealed and labeled bag of any imported soil material amendment or conditioner used in the preparation of the planting areas.

P11) The owner's representative reserves the right to review and approve all plant material at the job site prior to installation to ensure that the delivered state of the materials is in compliance with the material specifications contained herein. In the advent that delivered material does not comply with the project requirements the owner reserves the right to reject such materials and require the landscape contractor to remove and replace rejected materials at no additional cost to the owner. The landscape contractor shall remove rejected plants and materials from the project area and replace with acceptable materials.

P12) All plant material shall meet or exceed the requirements for Florida No. I quality or greater in accordance with the grades and standards for nursery plants published by the state of Florida, department of agriculture, current edition. All plant material is to be sourced from a nursery unless specifically noted to be collected.

P13) All plant material sizes specified are minimum sizes at time of installation. All container and tree caliper sizes are minimum. Container or caliper size may be increased if necessary to provide overall plant size specified. Material height and width specified in landscape schedule is based on branches in their normal position. Specified caliper is to be measured at a point 12'" above the ground.

P14) All plant material must be delivered to the project site and installed in good health, free of pest, pest eggs, fungus and disease. Root systems shall be vigorous and fibrous, filling the container but shall not be root bound or exhibit spiraling roots. Verification of the health and vigor of all plant material is the sole responsibility of the landscape contractor.

EXECUTION:

E1) Take responsibility for ensuring all work (including delivery, storage and disposal of their materials) is performed in compliance with applicable jurisdictional codes.

E2) Take responsibility for maintaining the area, materials and equipment within the limits of work in a safe, neat and orderly manner. Excess materials and debris are to be removed from the work area no less than daily or as directed by the general contractor.

E3) Take responsibility for maintaining work activities within the limits of work and performing work at times, and in a manner, as prescribed by the general contractor.

E4) Take responsibility for any excavation in the vicinity of pre-existing or newly installed utilities with the general contractor. It is the responsibility of the landscape contractor to notify the owner's representative a minimum of 48 hours prior to digging for field verification of all underground utilities and other elements.Take responsibility for prior to initiating operations emergency repair plans and any possible service interruption(s) on-site and off. The landscape contractor shall bear the sole responsibility of any damage to subsurface utilities caused by their work. Return of services to off-site areas (if any) must be immediate.

E5) Take responsibility to take precautions to protect all existing site roads, parking lots, curbs and utilities from damage. This applies not only to the area within the limits of work but also along any local access roads or roadways internal to the project.

E6) Take responsibility for all necessary safety measures during construction operations to protect the public according to all applicable codes and recognized local practices.

E7) Take responsibility for with general contractor to ensure that temporary erosion and sedimentation control measures (silt fence, geo fence and/or other measures) are installed prior to beginning excavation.

E8) Take responsibility for the maintenance of all plant materials and the planting areas until final acceptance by the owner's representative

E9) The owner's representative will not review any change order requests from the landscape contractor related to 'extra' work performed without prior written authorization from the owner's representative.

E10) Take responsibility for scheduling deliveries of sod so that all deliveries to site will be installed no more than 24 hours from the time it arrives on site. The amount of sod delivered to the site at any one time should not exceed the amount that can be laid under these time constraints.

E11) Take responsibility to exercise care in the placement of sod. Sod should be laid with staggered rows running parallel to slope contours. In slope situations, begin sod at base of slope and work uphill, all sod should be rolled and fertilized with a granular 16-4-8 fertilizer five days after planting. Newly sodded areas shall be kept moist for the first week after planting after which a watering rate of 2" per week, including rainfall, should be sufficient.

E12) Take responsibility for eradicating weeds within the limits of all planting areas prior to beginning landscape installation. Perennial weeds and grasses to be removed include, but are not limited to, nut grass, puncture vine, morning glory, dog fennel, torpedo grass, Bermuda grass, Bahia grass, kikuyu grass, crab grass, carpet grass, sedge and other noxious and/or invasive weeds. The site is to be maintained weed free throughout planting operations.

E13) Take responsibility for pre-tillage to scarify soils in all planting areas to a minimum depth of 4". Densely compacted areas between 85% and 90% are to be cross ripped to a minimum 8" depth. In the process of tilling are unacceptable materials including, but not limited to, foreign debris, construction waste, roots, concrete, asphalt and rocks greater than 1/2" diameter on average. In areas to receive sod till in fertilizer to a depth of 2" at a rate of 12 pounds per cubic ft.

E14) Take responsibility for the owner's representative with record copies of all shipping receipts for all materials, including plants and sod, delivered to the project site. Delivery of all fertilizer and soil amendment materials must be in original, unopened container's bearing manufacturer's guaranteed chemical analysis, name, trade mark and conformance with state law.

E15) Take responsibility to store all materials in an area to be determined by the owner's representative. All excess stored materials must be removed prior to final acceptance from the owner.

E16) Take responsibility for staking all plant materials in the field in accordance with the landscape plans for approval by the owner's representative prior to excavation and installation. Take responsibility for stakes or flags to indicate locations of individual trees whereas all shrub and groundcover materials must be laid out in their containers with the appropriate spacing for owner's representative review and approval. The owner reserves the right to make field adjustments to plant layout as part of this review. Failure by the landscape contractor to obtain layout approval from the owner's representative prior to installation may result in the removal and reinstallation of materials by the contractor at no additional costs to the owner.

E17) The irrigation system is designed to maintain an established landscape. The contractor shall not rely on it as the new material's sole source of water. Take responsibility for providing supplemental irrigation through hand watering or other means (including temporary drip, water wands and soaker hoses) to help establish the new and salvaged material. Take responsibility to continue to monitor the moisture content for all trees and shrubs. Use care to avoid creating large hole water jetting.

E18) Take responsibility for protecting and maintaining all plant material to remain within the limits of construction as indicated on the plans. Existing trees to remain shall be undisturbed and protected by barricades erected at the perimeter of the tree drip line. No vehicle shall traverse this area nor shall any storage of materials or equipment be permitted within this protected area. Bear the sole responsibility of replacement for any damage to protected materials caused by construction activity without additional costs to the owner.

E19) Take responsibility for establishing and maintaining the stability and plumb condition of all installed plant materials until receiving final acceptance from the owner's representative. The contractor shall be responsible for replacing any plant material which is damaged due to inadequate guying or staking, at no additional cost to the owner. The contractor shall remove all staking materials the end of the warranty period and dispose of properly offsite.

E20) Should the landscape contractor be required to replace any damaged, diseased, dying or dead plant material it is understood that the replacement material is to be of the same species, size and quality as that originally specified and approved by the owner's representative. Replacement with alternate materials will be permitted only with prior written approval from the owner's representative. The contractor will be responsible for the removal of all materials and leaving the impacted area clean following any remedial action.

E21) At the end of the warranty period the owner reserves the right to have the contractor replace any declining material or request an extension of up to ninety (90) days on any specific material.

E22) Take responsibility to install plant materials using the best horticultural practices:

A. Protect plant material from damage during delivery, staging and installation.

B. Do not begin installation of shrub and groundcover materials prior to completion of irrigation installation and finish grading,

C. Do not install plant materials in winds in excess of 30 miles per hour.

D. Do not install plant material if deemed site conditions will impede the ability of plant material to thrive without notifying owner's representative of concerns prior to installation.

E. Perform all work in accord with all applicable laws, codes and regulations inclusive of all permits and inspections required by federal, state and local jurisdictions.

F. The use of cables and chains for the lifting of trees is prohibited. Trees are to be lifted using nylon straps a minimum of 4" in width. Wrap trunks to protect from scraping and scarring.

G. The 'choke' strapping method for lifting trees is prohibited.

H. Do not drop plant material.

I. Limit the amount of plants to be installed per day to those that can adequately be watered in the same day.

J. Carefully remove containerized plants from their cans to avoid breaking the rootball. Containers should only be removed immediately prior to installation and plants should be immediately watered after placement.

K. Remove burlap and cut steel baskets from at least the top third of the rootball for all B&B material. Remove wire baskets to a minimum depth of 18'.

L. Plant material must be installed at correct elevation in relation to finish grade as indicated on the planting details after settling. Plants set at incorrect elevations will need to be raised or lowered accordingly at no additional cost to the owner.

M. Set fertilizer tablets on top of rootball for all trees laid out for planting to allow owner's representative to confirm correct amount.

N. Planting pits for trees and shrubs must be excavated to the dimensions specified on the planting details. Following planting area immediately surrounding plant is to be tamped firm and use water jet technique to remove all air pockets repeating as required.

O. Apply re-wetting agent to the surface of all plant pits for trees and shrubs per manufacturer's recommendations.

P. Apply mulch in even layer to depth shown on detail. Do not place mulch without the approval of the owner's representative that weed removal and fine grading requirements have been met.

Q. Continuously monitor status of installed materials and make modifications, clean-ups and replacements as required.

E23) All proposed trees shall be installed either entirely in or entirely out of planting beds. Planting bed outlines shall not be obstructed and shall be smooth and flowing. If trees are located outside planting beds in grass areas, maintain a minimum three feet 3' wide offset to allow for mowers to maneuver.

CALL 48 HOURS BEFORE YOU DIG

IT'S THE LAW! DIAL 811

811. Know what's below. Call before you dig.

SUNSHINE STATE ONE CALL OF FLORIDA, INC.

vhb.com

vhb

225 E. Robinson Street
Suite 300
Orlando, FL 32801
407.839.4006
Certificate of Authorization
Number FL #3932

Westport Reserve (Phase 2B)

City of Port Orange, Florida

No.	Revision	Date	Appvd.
1	Per Port Orange DRC Comments	5/12/16	
2	Per Port Orange P&Z Comments	7/01/16	

Designed by ST | Checked by CB

Issued for | Date Jan. 12, 2016

Not Approved for Construction

Drawing Title: Landscape Specifications

Drawing Number: L-350

Sheet of

Christopher J. Brown
LA 0000703
DATE: Jul. 01, 2016

Project Number: 62444.00

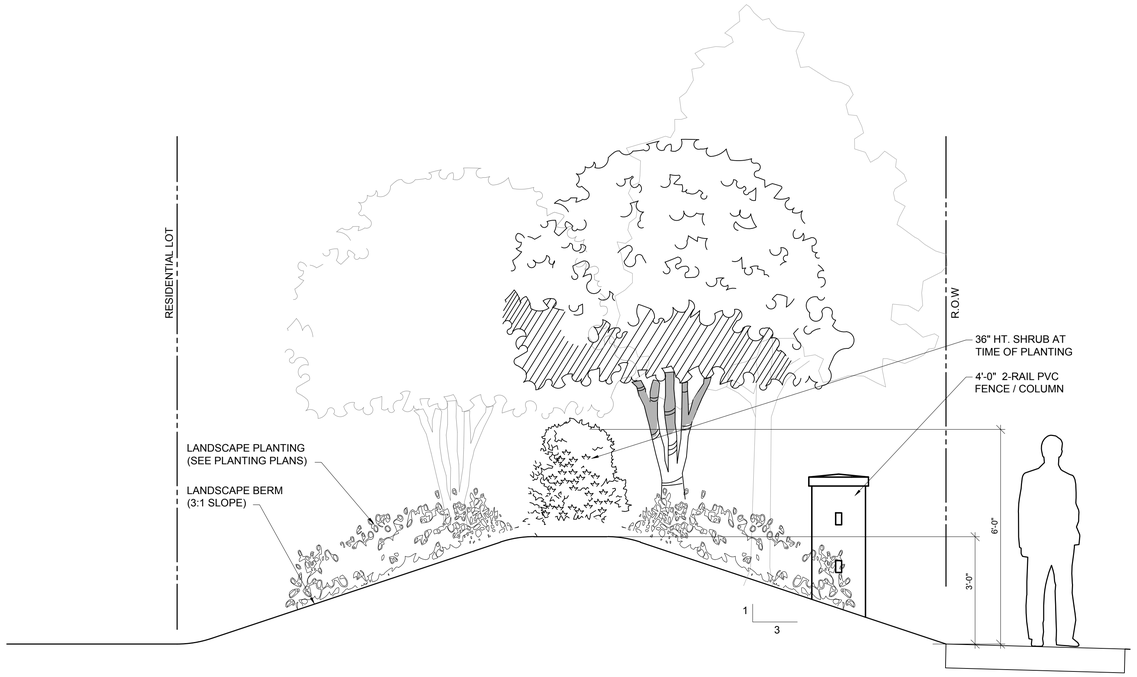

1 TYPICAL LANDSCAPED BERM AT TOWN WEST BLVD.

1/2" = 1'-0"

GENERAL LANDSCAPE NOTES

1) All on-site existing conditions including surface and subsurface utilities, grades, dimensions and soil conditions shall be verified by the contractor before construction begins. The contractor shall become familiar with all plans prepared by others that affect the landscape and irrigation work. Any discrepancies shall be brought to the attention of the owner's representative.
2) Every possible safeguard shall be taken to protect building surfaces, equipment, furnishings, curbs, utilities and existing planting areas to remain including lawn. The contractor is responsible for any damage or injury to person or property that may occur as a result of negligence in the execution of the contractor's work.
3) The contractor shall interface with other work being performed by other contractors. It will be necessary for the contractor to coordinate and schedule activities, where necessary, with other contractors and their subcontractors. The landscape contractor shall insure that their work does not impact established or projected drainage patterns.
4) Prior to planting installation, the contractor shall confirm the availability of all the specified plant materials and make arrangements with the owner's representative and owner's representative to review and mutually field tag agreed upon plant materials at least one (1) week prior to delivery to site.
5) All plant material sizes specified are minimum sizes. All container and tree caliper sizes are minimum. Container or caliper size may be increased if necessary to provide overall plant size specified.
6) The contractor shall be responsible for removing existing vegetation as required and preparing planting areas prior to installation of plant materials.
7) The landscape contractor shall test project soils to verify that the soils on-site are acceptable for proper growth of plant materials and adequate drainage in plant beds and planters. The landscape contractor shall coordinate the location, and procurement of existing on-site soil samples with the owner's representative. Representative samples shall be submitted to a certified testing laboratory for analysis. The findings, together with recommendations for amending the soils shall be reviewed and approved by the owner, landscape architect, and owner's representative prior to delivery and installation of plant materials at the job.
8) The landscape contractor shall insure adequate vertical soil depth and drainage in all plant beds and planters. Excavation of compacted fill shall be accomplished to insure proper soil depth and drainage.
9) All planting beds shall be staked in accordance with the plans and approved by the owner's representative prior to planting. The landscape contractor shall provide stakes or irrigation flags to locate the edges of all shrub and groundcover plant beds and individual trees and palms. If existing conditions do not allow the design to be laid out as shown, notify the owner's representative immediately.
10) All proposed trees shall be installed either entirely in or entirely out of planting beds. Planting bed outlines shall not be obstructed and shall be smooth and flowing. If trees are located outside planting beds in grass areas, maintain a minimum three feet 3' wide offset to allow for mowers to maneuver.
11) The plant quantities shown on the landscape contract documents are for the convenience of the landscape contractor. The landscape contractor is responsible for verifying all quantities and reporting any discrepancies to the owner's representative for clarification prior to contract award and commencement of work.
12) The landscape contractor shall verify the extent of sod work in the field, including grass areas damaged during construction. The contractor shall be responsible for providing sod in the areas shown on the plan, in sufficient quantity to provide full coverage. Additional grass required will be adjusted based on a square footage unit price. Areas to be grassed shall be amended per soils report to provide required nutrients and soil ph of between 6.0 and 7.0.
13) The landscape contractor shall be responsible for providing plants, spaced as specified on the plant list. When installing shrubs in planting beds, spacing of material shall take precedence over quantity of materials indicated for planting areas. Notify owner's representative immediately if such situations arise. Shrub and groundcover spacing is generally indicated on the plant list for all 'mass plantings'. Accent shrubs and trees that are not part of mass plantings shall be spaced as shown on the plans.
14) The landscape contractor shall be responsible for the stability and plumb condition of all installed plant materials. The contractor shall remove all staking materials the end of the grow-in period and dispose offsite.
15) All planting beds shall be top-dressed with a 3" layer of mulch as specified. All trees shall have a 3" thick mulch ring placed around the base of the trunk. The landscape scope of work includes mulching as an integral part the project.
16) All plant materials shall receive adequate watering by the landscape contractor as required until the landscape irrigation system is fully operational and until final acceptance by owner.
17) All existing plant beds to remain within the construction limit line shall be left undisturbed. Existing trees to remain, as noted on the drawings, shall be left undisturbed and protected by wooden barricades erected at the perimeter of the tree drip-line(s). No vehicle shall traverse this area nor shall any storage of materials or equipment be permitted within the area of the tree drip-line(s). Any existing plant beds or trees damaged by construction activity shall be replaced by the responsible party at their own expense.
18) No trees shall be planted within designated utility corridors, public right of way nor any plants located within four feet (4') of any swale centerline identified on the drawings. Field adjust as necessary and review adjustments with the owner's representative prior to installation.
19) The contractor shall be responsible for removal of all debris and excavated backfill off-site on a daily basis at no additional cost to the owner.
20) See landscape specifications for further requirements.

SOIL PREPARATION FOR ALL PLANTED AREAS:

1) Areas to be planted that are densely compacted, 85% to 90%, shall be cross-ripped to 12 in. depth. Areas over 90% compacted shall be cross-ripped to 24 in. depth, and, over 85% shall be cultivated to achieve 80% or less compaction to a depth of 18". all All unacceptable materials shall be removed.
2) Soil for planting shall be free of rocks over 1/2 in. in diameter, and free of foreign debris, refuse, plants or roots, clods, weeds, sticks, solvents, petroleum products, concrete, base rock, or other deleterious or undesirable and unwanted materials. Soil shall be free of soil-borne diseases and capable of sustaining healthy plant life. Materials not meeting such requirements shall be removed, including all temporary road bases or pavement already in place.
3) In area which will receive import soil, scarify the existing soil 12 in. deep if the soil has been compacted prior to backfilling.
4) Backfill planting media for all shrub and turf areas shall be provided at a min. depth of 18" and shall be comprised of the following mixture:
   - 1/3 coarse grain sand
   - 1/3 peat
   - 1/3 native class A soil

IRRIGATION NOTES:

1. All newly planted landscape materials specified shall be irrigated pursuant to section 7 of the port orange landscape code.
2. Permits for wells and irrigation systems must be obtained from Volusia County.

CALL 48 HOURS BEFORE YOU DIG

IT'S THE LAW! DIAL 811

811. Know what's below. Call before you dig.

SUNSHINE STATE ONE CALL OF FLORIDA, INC.

vhb.com

225 E. Robinson Street
Suite 300
Orlando, FL 32801
407.839.4006
Certificate of Authorization
Number FL #3932

Westport Reserve (Phase 2B)

City of Port Orange, Florida

No.	Revision	Date	Appvd.
1	Per Port Orange DRC Comments	5/12/16	
2	Per Port Orange P&Z Comments	7/01/16	

Designed by | Checked by

Issued for | Date

Jan. 12, 2016

Not Approved for Construction

Drawing Title

Landscape Notes

Drawing Number

L-351

Sheet of

Christopher J. Brown
LA 0000703
DATE: Jul. 01, 2016

Project Number

62444.00

Saved: Friday, July 01, 2016 12:37:34 PM STOFTE Plotted: Friday, July 01, 2016 1:49:03 PM Tofte, Shawn

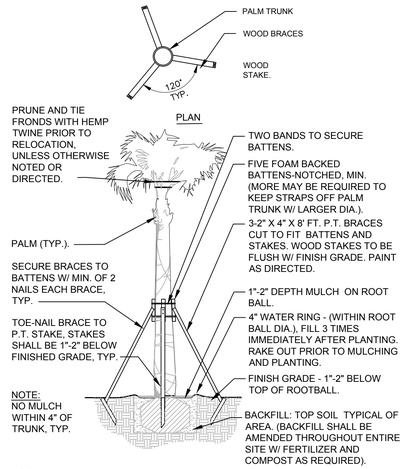

1 PALM BRACING DETAIL
N.T.S.

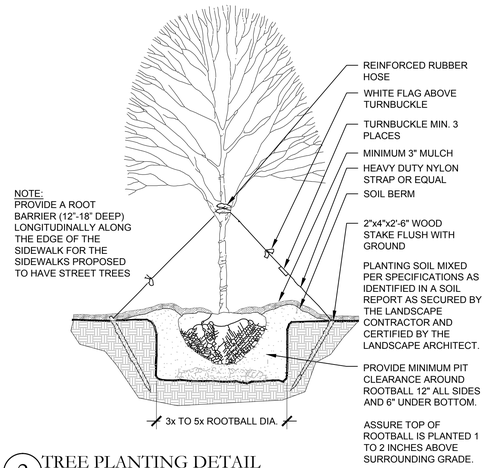

2 TREE PLANTING DETAIL
N.T.S.

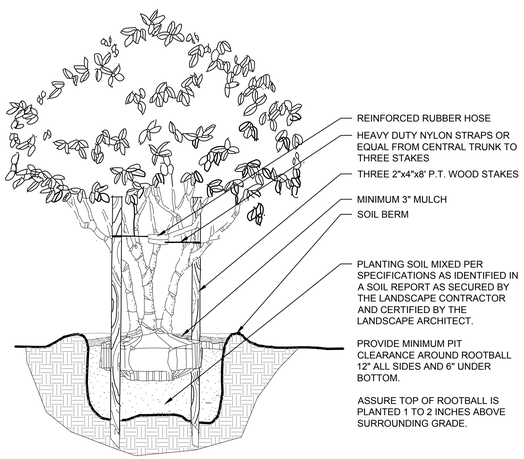

3 MULTI-STEM TREE PLANTING DETAIL
N.T.S.

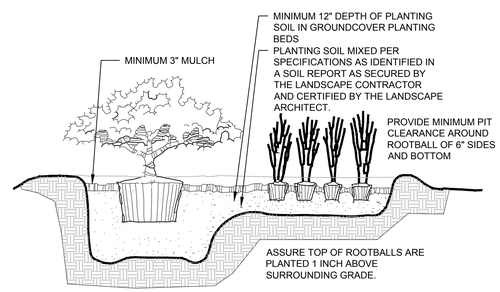

4 SHRUB/GROUNDCOVER PLANTING DETAIL
N.T.S.

STREET TREE PLANT SCHEDULE

TREES	COMMON NAME	BOTANICAL NAME	CONT	CAL	SIZE	QTY	REMARKS
IC	Dahoon Holly	Ilex cassine	65 gal	2.5"Cal	12` Ht., 6` Spd.	5	5` C.T.
UA	Winged Elm	Ulmus alata	65 gal	3"Cal	13` Ht. 9` Spd.	76	

PLANT SCHEDULE

TREES	COMMON NAME	BOTANICAL NAME	CONT	CAL	SIZE	QTY	REMARKS
ARF	Florida Flame Red Maple	Acer rubrum `Florida Flame`	B & B	4"Cal	14` Ht., 7` Spd.	6	
IN-3	Nellie R. Stevens Holly	Ilex `Nellie R. Stevens`	30 gal	2"Cal	8` Ht., 5` Spd.	36	
JVS3	Southern Red Cedar	Juniperus virginiana silicicola	B & B	3"Cal	10` Ht., 4` Spd.	16	
LN65	Natchez Crape Myrtle	Lagerstroemia indica `Natchez`	65 gal	3"Cal	11` Ht., 6` Spd.	1	
LW	Watermelon Red Crape Myrtle	Lagerstroemia indica `Watermelon Red`	30 gal	2"Cal	10` Ht., 5` Spd.	5	Multi-Trunk
LPJ	Japanese Privet	Ligustrum japonicum	45 gal	2.5"Cal	8` Ht., 6` Spd.	8	
MB100	Brackens Southern Magnolia	Magnolia grandiflora `Brackens`	100 gal	4"Cal	10` Ht., 4` Spd.	12	
MG-2	D.D. Blanchard Southern Magnolia	Magnolia grandiflora `D.D. Blanchard`	200 gal	5.5"Cal	16` Ht., 10` Spd.	9	Full Head; Straight Trunk
PLO	American Sycamore	Platanus occidentalis	B & B	2"Cal	10` Ht., 6` Spd.	2	
QV	Southern Live Oak	Quercus virginiana	100 gal	4"Cal	14` Ht., 6` Spd.	20	
QV-2	Southern Live Oak	Quercus virginiana	200 gal	5.5"Cal	16` Ht., 10` Spd.	14	
SP	Sabal Palm	Sabal palmetto	B & B	Heavy Trunk		18	C.T. Vary 8` to 26`
TCH	Golden Trumpet Tree	Tabebuia chrysotricha	30 gal	2.5"Cal	10` Ht., 5` Spd.	8	
TD65	Bald Cypress	Taxodium distichum	65 gal	4.5"Cal	14` Ht., 7` Spd.	6	
TG	Purple Glory Tree	Tibouchina granulosa	15 gal	1.5"Cal	8` Ht., 6` Spd.	4	
UA	Winged Elm	Ulmus alata	65 gal	3"Cal	13` Ht. 9` Spd.	1	
SHRUBS	**COMMON NAME**	**BOTANICAL NAME**	**CONT**	**SIZE**		**QTY**	**REMARKS**
CAS	Crinum Lily	Crinum asiaticum	7 gal	3` Ht., 3 P.P.P.		38	
RF2	Fashion Azalea	Rhododendron azalea `Fashion`	7 gal	36" Ht., 30" Spd		51	
VO	Walter`s Viburnum	Viburnum obovatum	7 gal	36" Ht., 24" Spd.		72	
SHRUB AREAS	**COMMON NAME**	**BOTANICAL NAME**	**CONT**	**SIZE**	**SPACING**	**QTY**	**REMARKS**
AA	Blue Lily of the Nile	Agapanthus africanus	3 gal	18" Ht., 18" Spd.	18" o.c.	916	
AN	Annuals	Annuals	4"pot	12" Ht., 10 P.P.P.	12" o.c.	338	
BU	Orange Bulbine	Bulbine frutescens	1 gal	12" Ht.; Full	24" o.c.	155	
DV	African Iris	Dietes vegeta	1 gal	18" Ht., 18" Spd.	18" o.c.	236	
DE	Gold Mound Duranta	Duranta erecta `Gold Mound`	3 gal	12" Height, 18" Spread	24" o.c.	925	
HPC	Dwarf Fire Bush	Hamelia patens `Compacta`	3 gal	18" Ht., 24" Spd.	24" o.c.	238	
IS	Dwarf Yaupon	Ilex vomitoria `Stokes Dwarf`	3 gal	18" Ht., 24" Spd.	24" o.c.	562	
JCHP	Parsoni Juniper	Juniperus chinensis `Parsonii`	3 gal	15" Ht. x 18" Spd.	24" o.c.	1,087	Full
LMR	Royal Purple Liriope	Liriope muscari `Royal Purple`	1 gal	12" Ht., 12" Spd.	18" o.c.	209	
RIA	White Indian Hawthorn	Raphiolepis indica `Alba`	3 gal	15" Ht., 18" Spd.	30" o.c.	462	
RK	Knockout Rose	Rosa `Knockout`	3 gal	18" Ht., 24" Spd.	24" o.c.	717	
RE	Firecracker Plant	Russelia equisetiformis	1 gal	18" Ht., 18" Spd.	18" o.c.	367	
TAM	Minima Jasmine	Trachelospermum asiaticum `Minima`	1 gal	12" Runners	18" o.c.	386	Full
TR	Dwarf Fakahatchee Grass	Tripsacum floridanum	1 gal	12" Ht., 24" Spd.	36" o.c.	1,096	
VOW	Walter`s `Withlacoochee`	Viburnum obovatum `Withlacoochee`	3 gal	24" Ht., 24" Spd.	36" o.c.	228	
VS	Sandankwa Viburnum	Viburnum suspensum	3 gal	24" Ht., 24" Spd.	30" o.c.	42	
GROUND COVERS	**COMMON NAME**	**BOTANICAL NAME**	**CONT**	**SIZE**	**SPACING**	**QTY**	**REMARKS**
MUL	Pine Straw	Mulch	flat	2"-3" Thick	12" o.c.	2,932	
SOD	Bahia Grass	Paspalum notatum	sod	Solid Panels		41,150 sf	
SSF	`Floratam` St. Augustine Sod	Stenotaphrum secundatum `Floratam`	sod	Solid Panels, Sand Grown		11,760 sf	

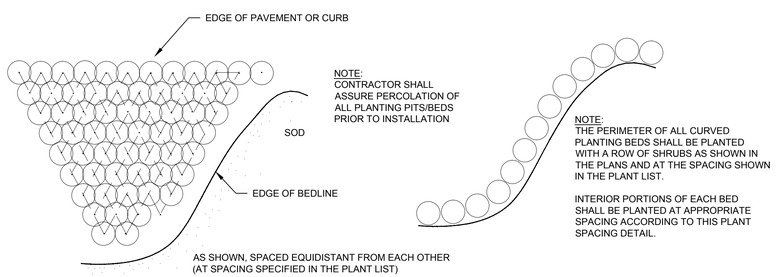

5 SHRUB/GROUNDCOVER SPACING PLAN
N.T.S.

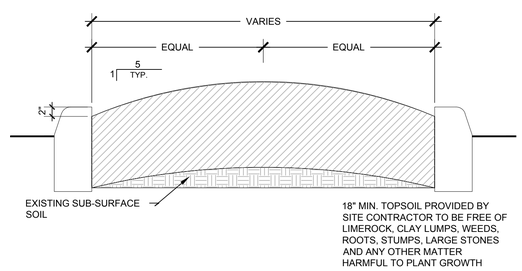

6 ISLAND CROWN DETAIL
NTS

CALL 48 HOURS BEFORE YOU DIG
811.
IT'S THE LAW! DIAL 811
Know what's below. Call before you dig.
SUNSHINE STATE ONE CALL OF FLORIDA, INC.

vhb.com
vhb
225 E. Robinson Street
Suite 300
Orlando, FL 32801
407.839.4006
Certificate of Authorization
Number FL #3932

Westport Reserve (Phase 2B)

City of Port Orange, Florida

No.	Revision	Date	Appvd.
1	Per Port Orange DRC Comments	5/12/16	
2	Per Port Orange P&Z Comments	7/01/16	

Designed by
Checked by
Issued for
Date
Jan. 12, 2016

Not Approved for Construction

Drawing Title
Landscape Details & Schedule

Drawing Number
L-352

Sheet of

Christopher J. Brown
LA 0000703
DATE: Jul. 01, 2016

Project Number
62444.00

Saved Friday, July 01, 2016 12:37:34 PM STOFTE Plotted Friday, July 01, 2016 1:49:15 PM Toftie, Shawn

W:\Project Files\Dewberry\Westport\62444.00-WP_LA-Irrigation Plans - 2016-04-10\62444.00-WP_LA-Irrigation Plans.dwg

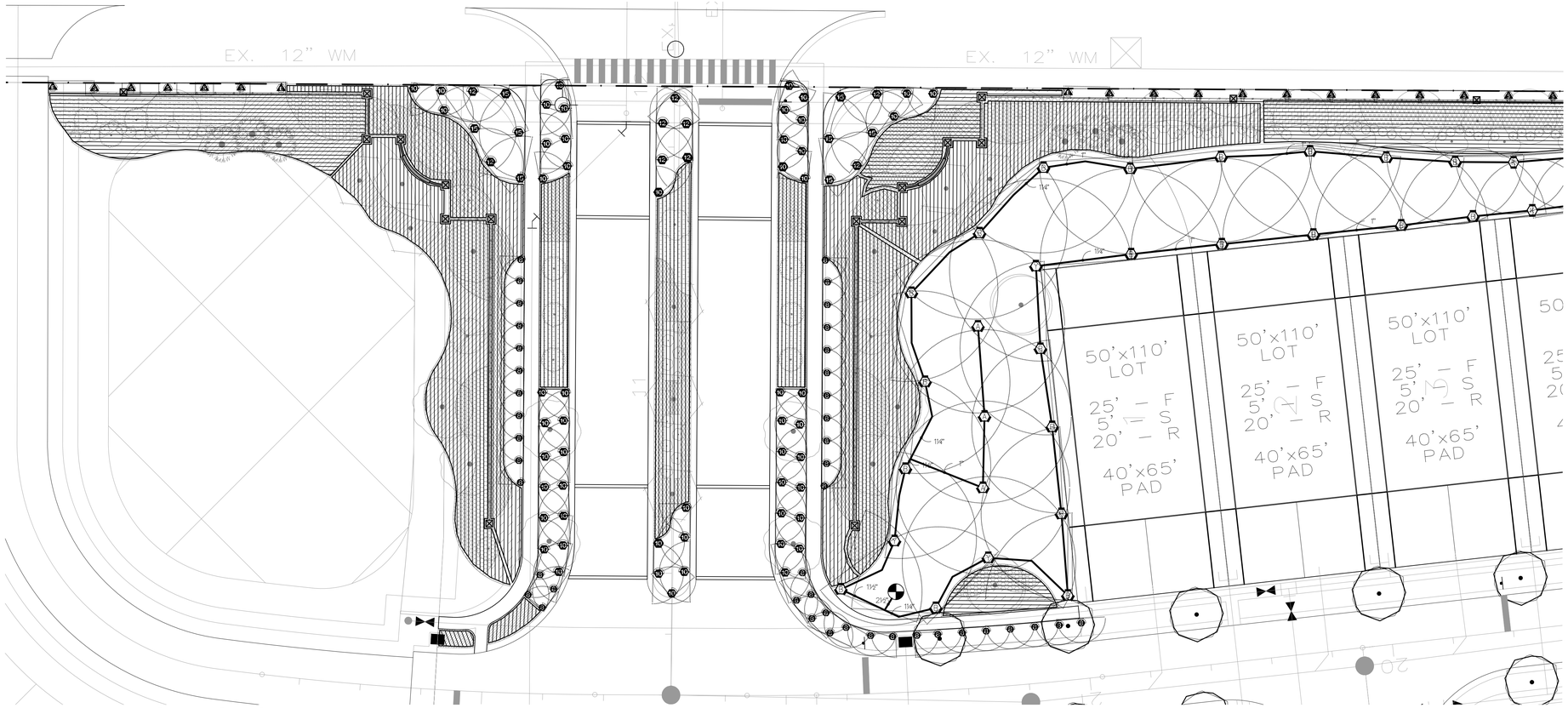

① MAIN ENTRANCE IRRIGATION PLAN

1" □20□0"

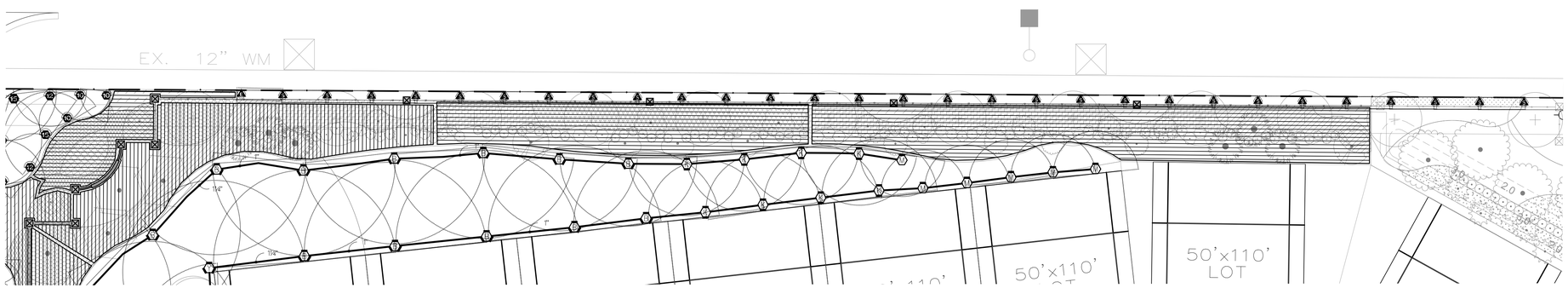

② TOWN WEST BLVD. BUFFER IRRIGATION PLAN

1" □20□0"

INSIGHT IRRIGATION LLC
(352) 434-5015
www.insightirrigation.com

MAINLINE AND LATERAL LOCATION, WHERE SHOWN, IS FOR GRAPHIC CLARITY PURPOSES ONLY. INSTALL AT THE BACK OF CURB, FRONT OF WALK, BACK OF WALK, OR ADJACENT TO OTHER HARDSCAPES TO FACILITATE FUTURE LOCATION AND TO PROTECT FROM DAMAGE. ENSURE MAINLINE IS INSTALLED ACCORDING FDEP GUIDELINES AND TO IRRIGATION SPECIFICATIONS AND DETAILS. PERMITS FOR WELLS AND IRRIGATION SYSTEMS MUST BE OBTAINED FROM VOLUSIA COUNTY.

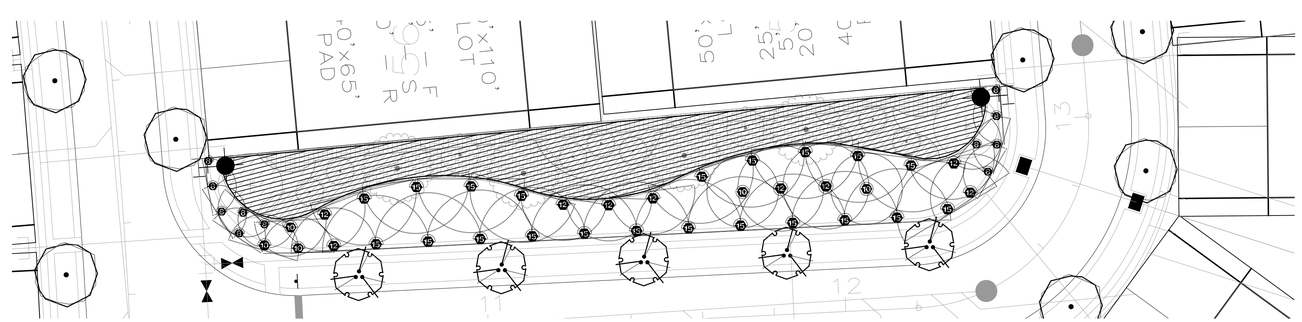

□ NEIG□BOR□OOD PAR□ IRRIGATION PLAN

1" □20□0"

vhb.com
225 E. Robinson Street
Suite 300
Orlando, FL 32801
407.839.4006
Certificate of Authorization
Number FL #3932

N

20 0 20 40
SCALE IN FEET

Westport Reserve (Phase 2B)

City of Port Orange, Florida

No.	Revision	Date	Appvd.
1	Per Port Orange DRC Comments	5/9/16	

Designed by JS
Checked by CB
Issued for
Date Jan. 12, 2016

Not Approved for Construction

Drawing Title
Landscape Irrigation Plan

Drawing Number
L-401

Sheet of

Christopher J. Brown
LA 0000703
DATE: M□□ 11, 2016

Project Number
62444.00

Saved: Wednesday, May 11, 2016 8:05:38 AM ASMIT_000 Plotted Wednesday, May 11, 2016 8:09:56 AM asmit_000

W:\Project Files\Dewberry\Westport\62444.00-WP_LA-Irrigation Plans - 2016-04-10\62444.00-WP_LA-Irrigation Plans.dwg

INSIGHT IRRIGATION LLC
(352) 434-5015
www.insightirrigation.com

811 KNOW WHAT'S BELOW ALWAYS CALL 811 BEFORE YOU DIG.
It's fast, It's free, It's the law.
Call 811 two business days before digging

MAINLINE AND LATERAL LOCATION, WHERE SHOWN, IS FOR GRAPHIC CLARITY PURPOSES ONLY. INSTALL AT THE BACK OF CURB, FRONT OF WALK, BACK OF WALK, OR ADJACENT TO OTHER HARDSCAPES TO FACILITATE FUTURE LOCATION AND TO PROTECT FROM DAMAGE. ENSURE MAINLINE IS INSTALLED ACCORDING FDEP GUIDELINES AND TO IRRIGATION SPECIFICATIONS AND DETAILS. PERMITS FOR WELLS AND IRRIGATION SYSTEMS MUST BE OBTAINED FROM VOLUSIA COUNTY.

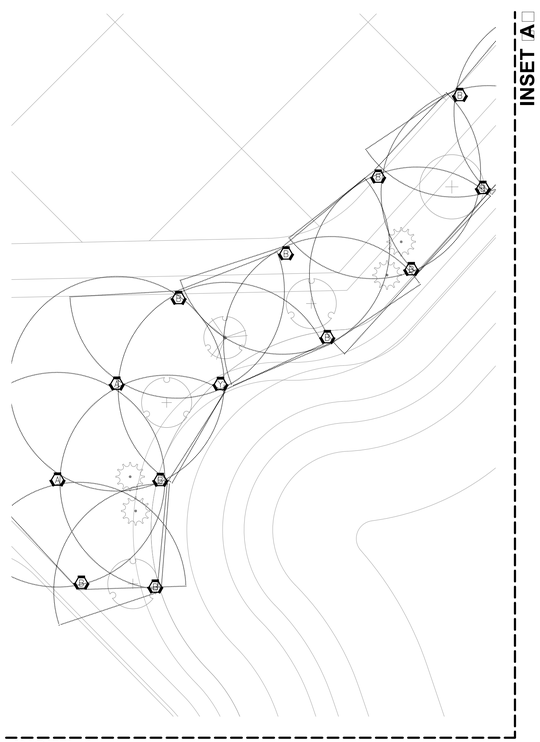

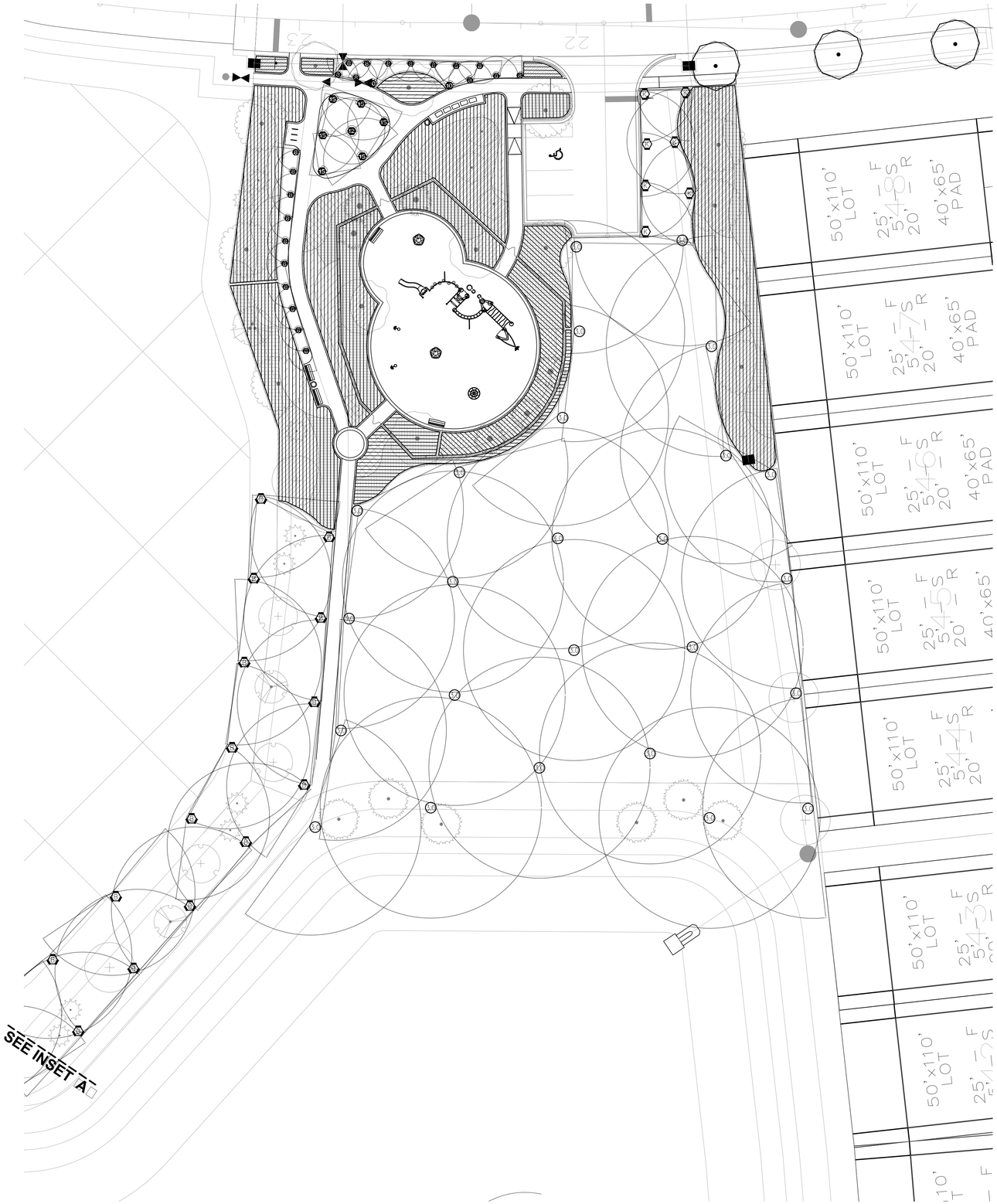

1 AMENITY PARK IRRIGATION PLAN
1" = 20'-0"

vhb.com
225 E. Robinson Street
Suite 300
Orlando, FL 32801
407.839.4006
Certificate of Authorization
Number FL #3932

N

20 0 20 40
SCALE IN FEET

Westport Reserve (Phase 2B)

City of Port Orange, Florida

No.	Revision	Date	Appvd.
1	Per Port Orange DRC Comments	5/9/16	

Designed by JS
Checked by CB
Issued for
Date Jan. 12, 2016

Not Approved for Construction

Drawing Title
Landscape Irrigation Plan

Drawing Number
L-402

Sheet of

Christopher J. Brown
LA 0000703
DATE: May 11, 2016

Project Number
62444.00

Saved Wednesday, May 11, 2016 8:05:38 AM ASMT_000 Plotted Wednesday, May 11, 2016 8:10:07 AM dsmit_000

INSIGHT IRRIGATION LLC
(352) 434-5015
www.insightirrigation.com

□□□A□□□ □C□□□□L□

SYMBOL	MANUFACTURER/MODEL	QTY	ARC	PSI	GPM	RADIUS
A	Rain Bird 1806-PRS-NP 15 Strip Series	3	EST	30	0.61	4'x15'
A	Rain Bird 1806-PRS-NP 15 Strip Series	34	SST	30	1.21	4'x30'
B	Rain Bird 1806-PRS-NP 8 Series MPR	63	180	30	0.52	8'
B	Rain Bird 1806-PRS-NP 8 Series MPR	13	90	30	0.26	8'
10	Rain Bird 1806-PRS-NP 10 Series MPR	2	360	30	1.58	10'
10	Rain Bird 1806-PRS-NP 10 Series MPR	40	180	30	0.79	10'
10	Rain Bird 1806-PRS-NP 10 Series MPR	15	90	30	0.39	10'
12	Rain Bird 1806-PRS-NP 12 Series MPR	3	360	30	2.37	12'
12	Rain Bird 1806-PRS-NP 12 Series MPR	14	180	30	1.3	12'
12	Rain Bird 1806-PRS-NP 12 Series MPR	1	90	30	0.65	12'
15	Rain Bird 1806-PRS-NP 15 Series MPR	28	180	30	1.85	15'
15	Rain Bird 1806-PRS-NP 15 Series MPR	5	90	30	0.92	15'
10	Rain Bird 1806-PRS-NP HE-VAN Series	4	Adj	30		10'
12	Rain Bird 1806-PRS-NP HE-VAN Series	1	Adj	30		12'
15	Rain Bird 1806-PRS-NP HE-VAN Series	2	Adj	30		15'
10	Hunter MPI000 PROS-06-PRS40-CV-R	6	90-210	40		14'
10	Hunter MP2000 PROS-06-PRS40-CV-R	15	90-210	40		19'
10	Hunter MP3000 PROS-06-PRS40-CV-R	5	360	40	3.64	30'
10	Hunter MP3000 PROS-06-PRS40-CV-R	42	90-210	40		30'
10	Hunter MP3000 PROS-06-PRS40-CV-R	4	210-270	40		30'

SYMBOL	MANUFACTURER/MODEL/DESCRIPTION	QTY	PSI	GPM	RADIUS
10	Rain Bird 5006-PC, FC-NP Turf Rotor, 6.0" Pop-Up, Plastic Riser. Adjustable and Full Circle. Standard Angle Nozzle. With Non-Potable Purple Cover.	25	45	3.09	40'

SYMBOL	MANUFACTURER/MODEL/DESCRIPTION	QTY	DETAIL
	Area to Receive Dripline Netafim TLDL-9-12 (12) Techline Pressure Compensating Landscape Dripline. 0.9GPH emitters at 12.0" O.C. Dripline laterals spaced at 12.0" apart, with emitters offset for triangular pattern. Surface and Sub Surface Installations. UV Resistant.	34,410 s.f.	

SYMBOL	MANUFACTURER/MODEL/DESCRIPTION	QTY	DETAIL
	Rain Bird PESBR-PRS-D 1", 1-1/2", and 2" Durable Chlorine-Resistant Valves for Reclaimed Water Applications. With Scrubber Mechanism Technology, Purple Flow Control Handle, and Pressure Regulator Module.	1	
C	Rain Bird ESP-LXD-LXMMSS-LXMMSSPED with (1) ESPLXD-SM75 (25 station 2-wire, exterior stainless steel pedestal. Flow sensing.	1	
	Irrigation Lateral Line: Blu-Lock and PVC Class 200 Blu-Lock pipe, as manufactured by Hydro Rain, 1/2" to 1", then PVC Class 200 for 1-1/4" and larger. Only lateral transition pipe sizes 1" and above are indicated on the plan, with all others being 3/4" in size.	983.5 l.f.	

Valve Callout
- Valve Number
- Valve Flow
- Valve Size

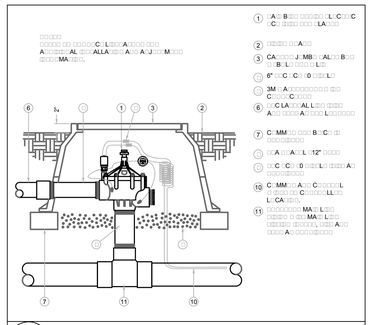

B — MASTER VALVE

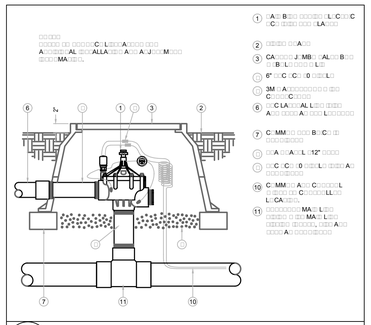

B — RAIN BIRD RCV

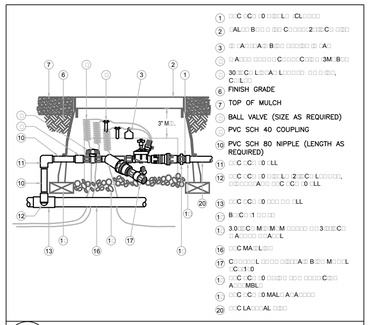

B2 — RAIN BIRD RCV XCZ-150

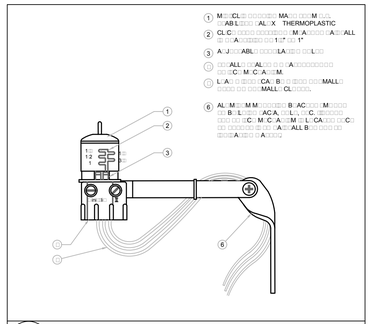

C — MINI-CLICK II RAIN SENSOR

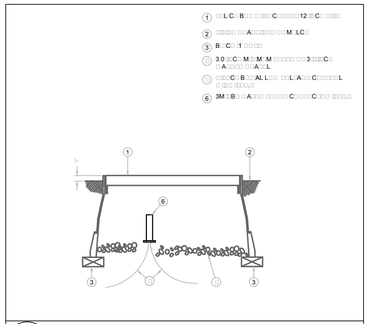

C — WIRE SPLICE

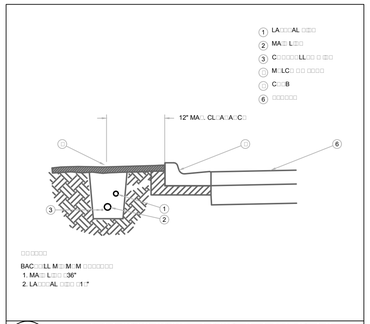

L — MAINLINE AND LATERAL PIPING DETAIL

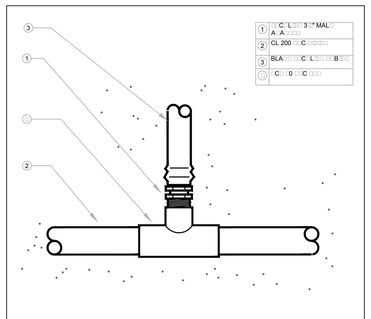

M — TECHLINE TO PVC CONNECTION

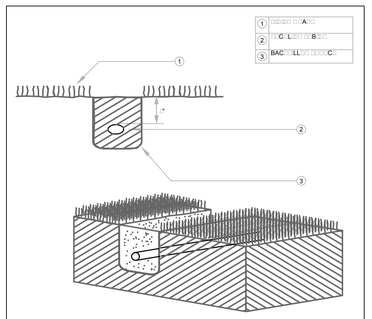

M — TECHLINE TRENCHING DETAIL

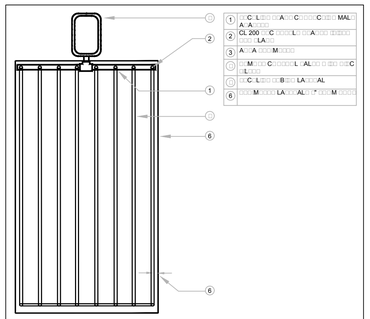

N — TECHLINE SINGLE FEED LAYOUT

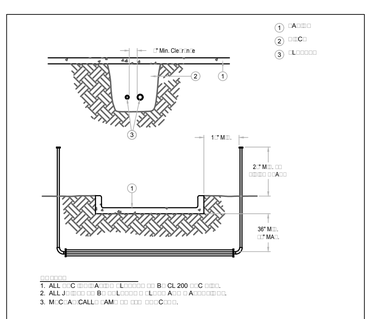

O — SLEEVING

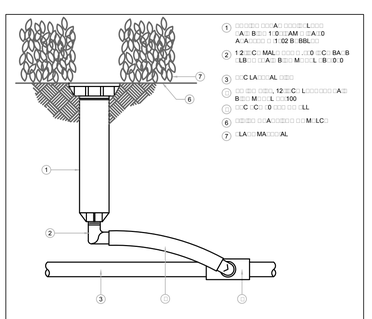

Q — RAIN BIRD 1804-SAM POP-UP WITH 1402 BUBBLER

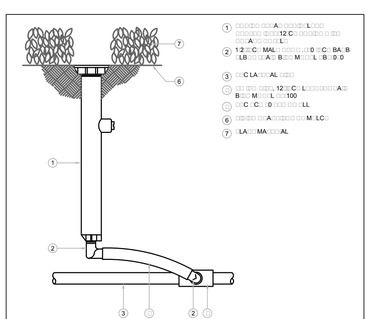

S — HUNTER INST-12-CV

vhb.com
225 E. Robinson Street
Suite 300
Orlando, FL 32801
407.839.4006
Certificate of Authorization
Number FL #3932

N

20 0 20 40
SCALE IN FEET

Westport Reserve (Phase 2B)

City of Port Orange, Florida

No.	Revision	Date	Appvd.
1	Per Port Orange DRC Comments	5/9/16	

Designed by JS
Checked by CB
Issued for
Date Jan. 12, 2016

Not Approved for Construction

Drawing Title
Landscape Irrigation Details

Drawing Number
L-403

Sheet of

Christopher J. Brown
LA 0000703
DATE: M□□ 11, 2016

Project Number
62444.00

IRRIGATION NOTES & SPECIFICATIONS

DESIGN BASED ON LANDSCAPE PLANS FOR WESTPORT RESERVE BY VHB. CONTRACTOR SHALL REFER TO THESE PLANS TO COORDINATE CONTROLLER, PIPING, MASTER VALVES, WIRING, ETC. INSTALLATION WITH THE GENERAL CONTRACTOR AND ANY AND ALL OTHER AFFECTED TRADES.

The system has been designed to conform with the requirements of all applicable codes, laws, ordinances, rules, regulations and conventions. Should any conflict exist, the requirements of the codes shall prevail. It is the responsibility of the owner/installation contractor to ensure the entire system is installed as designed. Irrigation contractor responsible for obtaining all required permits according to federal, state and local laws.

The scope of work is shown on the plans, notes and details. The Irrigation Contractor shall be certified as a CERTIFIED IRRIGATION CONTRACTOR (CIC) by the Irrigation Association AND as a Rain Bird IQ Technician. The certification shall be current and in good standing.

THE WORK

The work specified in this section consists of furnishing all components necessary for the installation, testing, and delivery of a complete, fully functional automatic landscape irrigation distribution and control system that complies with the irrigation plans, specifications, notes, and details. This work shall include, but not be limited to, the providing of all required material if applicable (pipes, valves, fittings, controllers, wire, primer, glue, etc.), layout, protection to the public, excavation, assembly, installation, back filling, compacting, repair of road surfaces, controller and low voltage feeds to valves, cleanup, maintenance, guarantee and as-built plans.

Zones are prioritized first by public safety and then by hydraulic concerns. This sequencing will be a mandatory punch list item.

These plans have been designed to satisfy/exceed the Florida Irrigation Society Standards and Specifications for Turf and Landscape Irrigation Systems, fourth edition. All products should be installed per manufacturer's recommendation. Contractor shall verify all underground utilities 72 hours prior to commencement of work.

It is the responsibility of the irrigation contractor to familiarize themselves with all grade differences, location of walls, retaining walls, structures and utilities. Do not willfully install the distribution system as shown on the drawings when it is obvious in the field that unknown obstruction, grade differences or differences in the area dimensions exist that might not have been considered in the engineering. Such obstructions, or differences, should be brought to the attention of the owner's authorized representative. In the event this notification is not performed, the irrigation contractor shall assume full responsibility for any revisions necessary.

Irrigation contractor shall repair or replace all items damaged by their work. Irrigation contractor shall coordinate their work with other contractors for the location and installation of pipe sleeves and laterals through walls, under roadways and paving, etc.

The contractor shall take immediate steps to repair, replace, or restore all services to any utilities which are disrupted due to their operations. All costs involved in disruption of service and repairs due to negligence on the part of the contractor shall be their responsibility.

POINT OF CONNECTION (P.O.C.)

There is one proposed Hoover Pump Station connected to a proposed 3" PVC reclaimed mainline with 8" mainline stubs for future

The POC shall be capable of a minimum of 800 gpm at 75psi.

Contractor to verify these minimum conditions can be met prior to ordering of materials and the beginning of installation. If the conditions can not be met, the contractor must notify the designer prior to proceeding with the work. If the contractor does not do so, the contractor proceeds at their own risk and becomes responsible for any future work required to make the system perform as required.

THE PIPE

Pipe locations shown on the plan are schematic and shall be adjusted in the field. When laying out mainlines place a maximum of 18" away from either the back of curb, front of walk, back of walk, or other hardscape to allow for ease in locating and protection from physical damage. Install all lateral pipe near edges of pavement or against buildings whenever possible to allow space for plant root balls. Always install piping inside project property's boundary.

Pipe sizes shall conform to those shown on the drawings. No substitutions of smaller pipe sizes shall be permitted, but substitutions of larger sizes may be approved. All damaged and rejected pipe shall be removed from the site at the time of said rejection.

CLASS 200 PVC PANTONE PURPLE MAINLINE WITH DUCTILE IRON FITTINGS AND LEEMCO JOINT RESTRAINTS (SIZED PER PLANS)

ELECTRICAL POWER SUPPLY

Electrical supply for controllers, sensors, relays, to be provided by irrigation contractor. Contractor to coordinate with local utilities for the installation of, and connection to, site available power supplies for required electrical components as set forth in the irrigation plans.

All electrical work is to comply with the National Electrical Code and any, and all, other applicable electrical codes, laws and regulations. A licensed electrician shall perform all electrical hook-ups. Power for each controller/CCU shall be a dedicated 120 volt, 20 amp circuit unless otherwise specified in the plans. Power for each pump to be according to pump specifications indicated in these plans.

WIRING

Irrigation control wire shall be DIRECT BURIAL MAXI WIRE(see specification)

All wire shall be double-jacketed, two (2) conductor cable specifically designed by Paige Electric for use with RAIN BIRD control systems. The cable shall be suitable for direct burial, or for installation in ducts or conduits.
The conductors shall be #14 AWG tin-coated, soft drawn, annealed, solid copper conforming to ASTM 33 with 4/64" thick PVC (polyvinyl chloride) insulation, conforming to UL Standard #493 for thermoplastic insulated style UF (Underground Feeder), rated at 60 degrees C.
The two insulated conductors shall be laid parallel and encased in a single outer jacket of 3/64" thick, high density, sunlight resistant polyethylene conforming to ICEA S-61-402 and NEMA WC5, having a minimum wall thickness of .045". The outer jacket shall be pressure extruded so as to completely fill the interstices between the two insulated wires, or may have tube jacketing or form an envelope over the two insulated UF conductors lying in parallel at the discretion of the manufacturer.
The two conductors shall be color coded with one conductor black and the other red. Both conductors shall be the SAME SIZE.
All splices and connections in this wiring shall be made using the waterproof splice connectors.3M DBY/R-6 wire connector kits will be used. Any other type of wire connector will NOT be accepted. Care shall be taken with each wire connection to assure a tight, waterproof connection. IT IS ESSENTIAL THAT ALL CONNECTIONS BE ABSOLUTELY WATERTIGHT WITH NO LEAKAGE TO GROUND NOR SHORTING BETWEEN CONDUCTORS.

LAYOUT

Lay out irrigation system mainlines and lateral lines. Make the necessary adjustments as required to take into account all site obstructions and limitations prior to excavating trenches.

Locate valves prior to excavation. Ensure that their location provides for easy access and that there is no interference with physical structures, plants, trees, poles, etc. Valve boxes must be placed a minimum of 12" and a maximum of 15" from the edge of pavement, curbs, etc. and the top of the box must be 3" above finish grade.

VALVES

Sequence all valves so that the farthest valve from the P.O.C. operates first and the closest to the P.O.C. operates last. The closest valve to the P.O.C. should be the last valve in the programmed sequence.

Adjust the flow control on each RCV to ensure shut off in 10 seconds after deactivation by the irrigation controller.

Using an electric branding iron, brand the valve I.D. letter/number on the lid of each valve box. This brand must be 2"-3" tall and easily legible.

TRENCHING

Excavate straight and vertical trenches with smooth, flat or sloping bottoms. Trench width and depth should be sufficient to allow for the proper vertical and horizontal separation between piping as shown in the pipe installation detail on the detail sheet.

Protect existing landscaped areas. Remove and replant any damaged plant material upon job completion. The replacement material shall be of the same genus and species, and of the same size as the material it is replacing. The final determination as to what needs to be replaced and the acceptability of the replacement material shall be solely up to the owner or owner's representative.

BACK FILL

The Back fill 6" below, 6" above, and around all piping shall be of clean sand and anything beyond that in the trench can be of native material but nothing larger than 2" in diameter.

Main line pipe depth measured to the top of pipe shall be:
24" minimum for all Main Line with a 36" minimum at vehicular crossings.

Lateral line depths measured to top of pipe shall be:
18" minimum for 3/4"-4" HDPE with a 36" minimum at vehicular crossings;

Contractor shall backfill all piping, both mainline and laterals, prior to performing any pressure tests. The pipe shall be backfilled with the exception of 2' on each side of every joint (bell fittings, 90's, tees, 45's, etc.). These joints shall not be backfilled until all piping has satisfactorily passed its appropriate pressure test as outlined below.

FLUSHING

Prior to the placement of valves, flush all mainlines for a minimum of 10 minutes or until lines are completely clean of debris, whichever is longer.

Prior to the placement of heads, flush all lateral lines for a minimum of 10 minutes or until lines are completely clean of debris, whichever is longer.

Use screens in heads and adjust heads for proper coverage avoiding excess water on walls, walks and paving.

TESTING

Mainline: Remove all remote control valves and cap using a threaded cap on SCH 80 nipple. Fill mainline with water and pressurize the system to 125 PSI. Monitor the system pressure at two gauge locations; the gauge locations must be at opposite ends of the mainline. With the same respective pressures, monitor the gauges for two hours. There can be no loss in pressure at either gauge for solvent-welded pipe. For HDPE pipe, see HDPE notes. For gasketed pipe, testing requires measurement of the water pumped into the mainline system, using a hydrostatic pump, to maintain 125 PSI - this water volume shall be no more than the result of the following formula:

$$L=(ND\sqrt{P})/7400$$

where L=Allowable leakage in gallons per hour
N=Number of joints in pipe tested
D=Nominal diameter of pipe (in inches)
P=Average Test Pressure (in PSI)

If these parameters are exceeded, locate the problem; repair it; wait 24 hours and retry the test. This procedure must be followed until the mainline passes the test.

Lateral Lines: The lateral lines must be fully filled to operational pressure and visually checked for leaks. Any leaks detected must be repaired.

SUBMITTALS

Pre-Construction: The contractor must submit for written approval, prior to installation, five (5) copies of the manufacturer's cut sheets/specifications for all components to be used in the irrigation system.

After project completion:
As a condition of final acceptance, the irrigation contractor shall provide the owner with:
1. Irrigations As-builts - shall be provided utilizing a sub-foot Global Positioning System (GPS) to accurately locate all mainlines, sleeves, remote control valves, gate valves, independent wire runs, wire splice boxes, controllers, high voltage supply sources/conduit path, control mechanisms, sensors, wells and water source connections in Florida East State Plane, NAD 83, and CORS 96 format. The data collected shall be in POINT format and include an ID for each data point with Manufacturer, Type, Size, and Depth. All mainline and independent runs of wire shall be located every 30' for straight runs and at every change of direction. Sleeves will be located at end points and every 20' of length. All underground items shall include depth in inch format. These POINTS once collected shall be imported into an AutoCAD DWG geo-referenced base file to be labeled accordingly. The completed AS-Built shall be a Geo-Referenced DWF file and delivered to the owner on a compact disk (CD).

2. Controller charts - Upon completion of "as-built" prepare controller charts; one per controller. Indicate on each chart the area controlled by a remote control valve (using a different color for each zone). This chart shall be reduced to a size that will fit inside of the controller door. The reduction shall be hermetically sealed inside two 2ml pieces of clear plastic.

3. Grounding Certification - Provide ground certification results for each controller and pump panel grounding grid installed. This must be on a licensed electrician letter head indicating location tested (using IR plan symbols), date, time, test method, and testing results.

INSPECTIONS AND COORDINATION MEETINGS REQUIRED - Contractor is required to schedule, perform, and attend the following, and demonstrate to the owner and/or owners representative to their satisfaction, as follows:

1. Pre-construction meeting - Designer and contractor to review entire install process and schedule with owner/general contractor.
2. Mainline installation inspection(s) - all mainline must be inspected for proper pipe, fittings, depth of coverage, backfill. and installation method
3. Mainline pressure test - All mainline shall be pressure tested according to this designs requirements
4. Flow Meter calibration - All flow meters must be calibrated, provide certified calibration report for all flow meters.
5. USDA Soil Quality Tests for infiltration/texture
6. Coverage and operational test
7. Final inspection
8. Punch list inspection

FINAL ACCEPTANCE

Final acceptance of the irrigation system will be given after the following documents and conditions have been completed and approved. Final payment will not be released until these conditions are satisfied.

1. All above inspections are completed, documented, and approved by owner.
2. Completion and acceptance of `as-built' drawings.
3. Acceptance of required controller charts and placement inside of controllers.
4. All other submittals have be made to the satisfaction of the owner.

GUARANTEE: The irrigation system shall be guaranteed for a minimum of one calendar year from the time of final acceptance.

MINIMUM RECOMMENDED
IRRIGATION MAINTENANCE PROCEDURES

1. Every irrigation zone should be checked monthly and written reports generated describing the date(s) each zone was inspected, problems identified, date problems repaired, and a list of materials used in the repair. At minimum, these inspections should include the following tasks:

A. Turn on each zone from the controller to verify automatic operation.
B. Check schedules to ensure they are appropriate for the season, plant and soil type, and irrigation method. Consult an I.A. certified auditor for methods used in determining proper irrigation scheduling requirements.
C. Check remote control valve to ensure proper operation.
D. Check setting on pressure regulator to verify proper setting, if present.
E. Check flow control and adjust as needed; ensure valve closure within 10-15 seconds after deactivation by controller.
F. Check for leaks - mainline, lateral lines, valves, heads, etc.

2. Check controller/C.C.U. grounds for resistance (10 ohms or less) once per year. Submit written reports.

3. Inspect all valve boxes to ensure they are in good condition, lids are in place and locked.

4. Conduct additional inspections, maintenance tasks, etc. that are particular for your site.

INSIGHT IRRIGATION LLC
(352) 434-5015
www.insightirrigation.com

vhb.com
vhb
225 E. Robinson Street
Suite 300
Orlando, FL 32801
407.839.4006
Certificate of Authorization
Number FL #3932

N

20 0 20 40
SCALE IN FEET

Westport Reserve (Phase 2B)

City of Port Orange, Florida

No.	Revision	Date	Appvd.
1	Per Port Orange DRC Comments	5/9/16	

Designed by JS
Checked by CB
Issued for
Date Jan. 12, 2016

Not Approved for Construction

Drawing Title
Landscape Irrigation Notes

Drawing Number
L-404

Sheet of

Christopher J. Brown
LA 0000703
DATE: MAY 11, 2016

Project Number
62444.00

\\vhb\proj\Orlando\62444.00 Emerson-Coquina Cove\cad\d\Planset\Westport Single-Family\62444.00-WP_LA-Lighting Overall.dwg

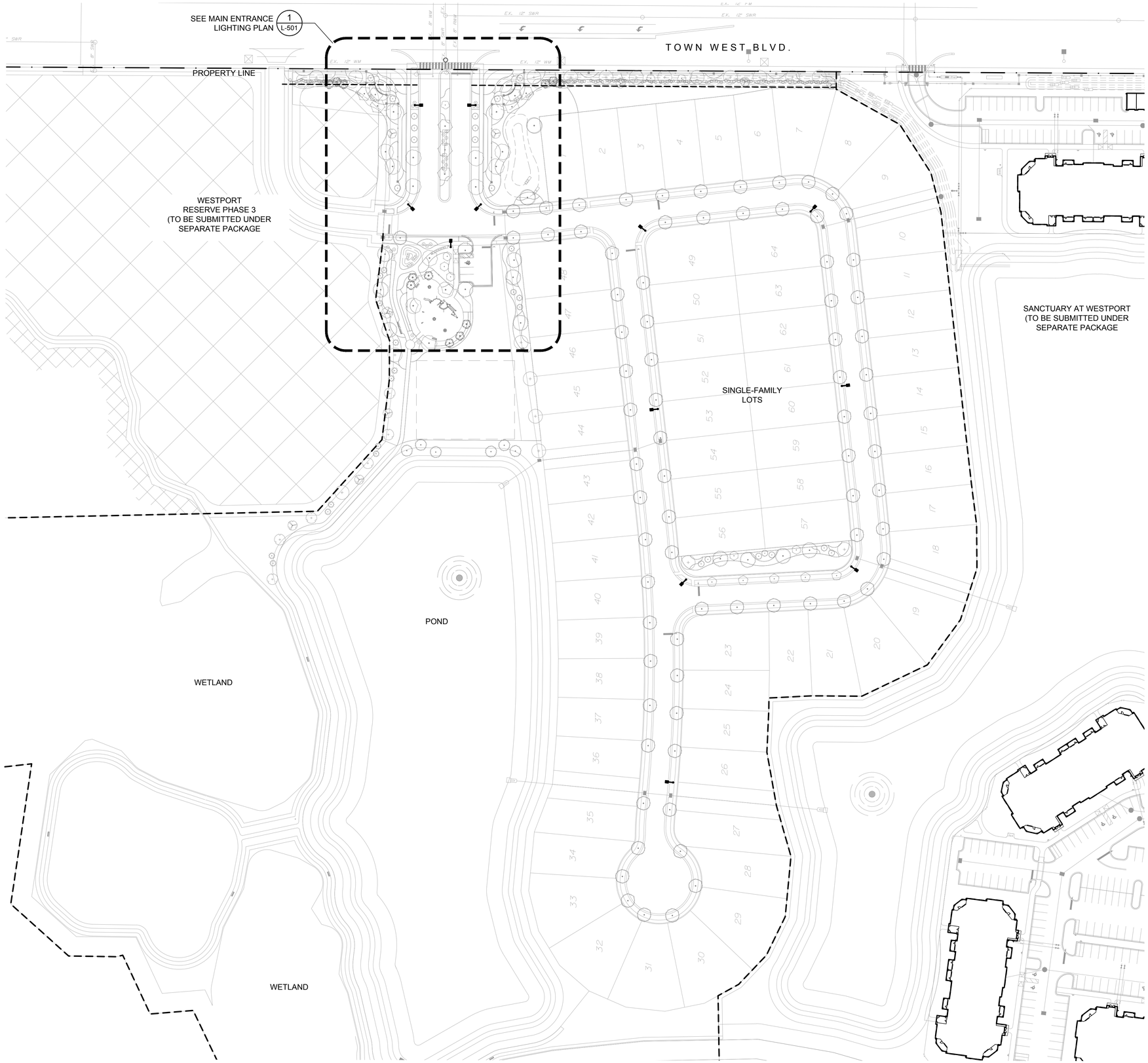

LIGHTING SCHEDULE

= STREET LIGHT (TYP.) TYPE M-24 (SEE DETAIL)

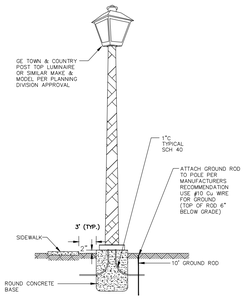

NOTE:

1. ALL WALKLIGHTS SHALL BE LOCATED ON 100' CENTERS. THE PLANNING DIVISION SHALL BE CONTACTED AT (386) 506-5600 TO FIELD VERIFY THE PROPOSED LOCATIONS FOR WALKLIGHTS.
2. ALL LIGHT POLES SHALL BE DESIGNED TO WITHSTAND 130 M.P.H. WIND SPEED.
3. THE STRING / SERIES OF WALK LIGHTS ADJACENT TO EACH PROJECT SHALL BE FITTED AND CONTROLLED BY ONE SINGLE SOLAR CELL.
4. MAINTENANCE AND OPERATION OF WALKLIGHTS SHALL BE THE RESPONSIBILITY OF THE HOMEOWNERS ASSOCIATION OR ADJACENT PROPERTY OWNER.

STANDARD CONSTRUCTION DETAIL TRADITIONAL POST TOP	FILE NAME: M24.DWG
REV. 2/13	DETAIL REF: M-24

N

60 0 60 120
SCALE IN FEET

vhb.com

225 E. Robinson Street
Suite 300
Orlando, FL 32801
407.839.4006
Certificate of Authorization
Number FL #3932

Westport Reserve (Phase 2B)

City of Port Orange, Florida

No.	Revision	Date	Appvd.
1	Per Port Orange DRC Comments	5/12/16	
2	Per Port Orange P&Z Comments	7/01/16	

Designed by: ST
Checked by: CB
Issued for
Date: Jan. 12, 2016

Not Approved for Construction

Drawing Title
Overall Landscape Lighting Plan

Drawing Number
L-500

Sheet of

Christopher J. Brown
LA 0000703
DATE: Jul. 01, 2016

Project Number
62444.00

Saved Friday, July 01, 2016 1:34:28 PM STOFTE Plotted Friday, July 01, 2016 1:51:02 PM Tofte, Shawn

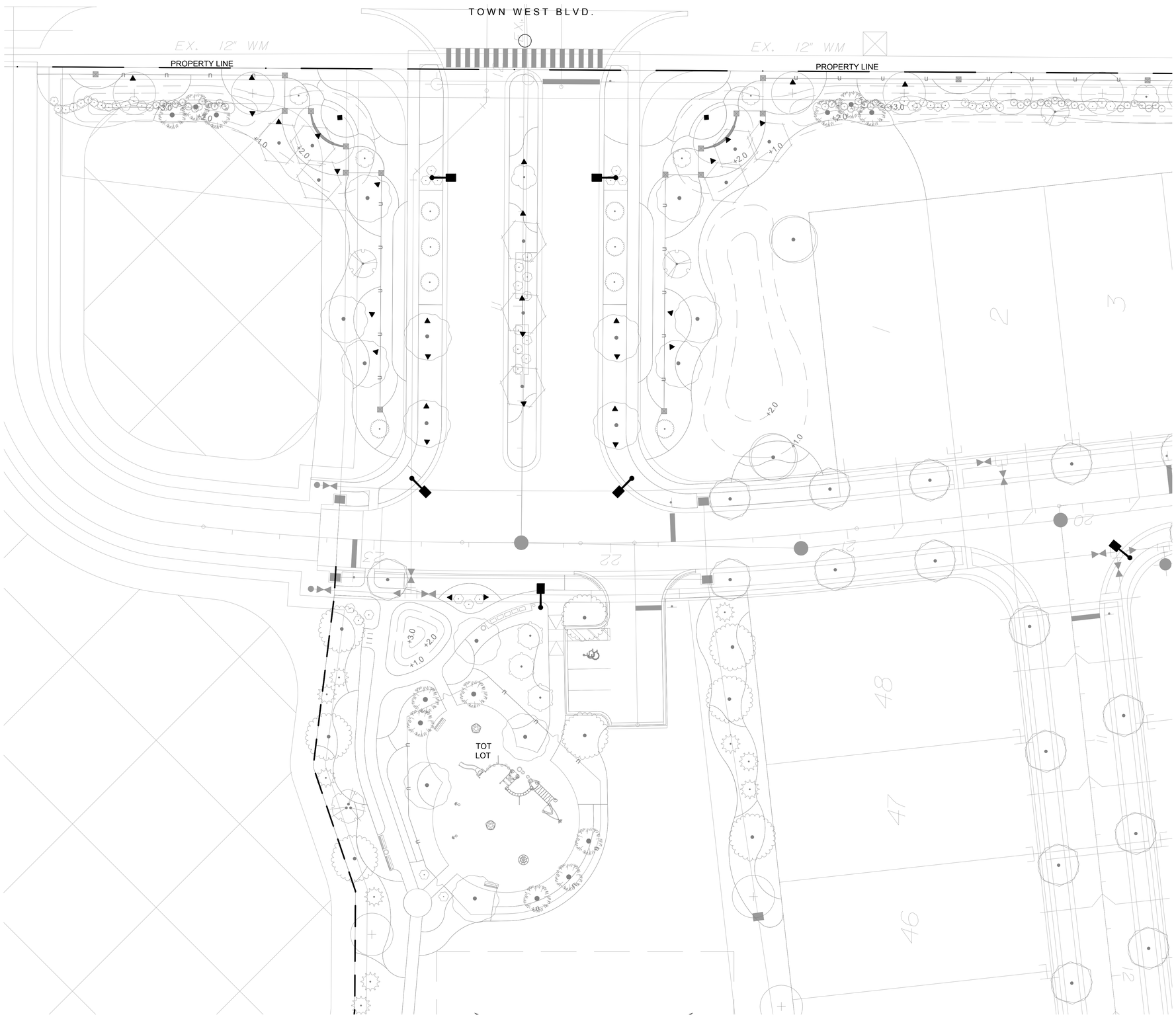

① MAIN ENTRANCE LIGHTING PLAN

1" = 20'-0"

LIGHTING SCHEDULE

- ■ = SIGN LIGHT TYPE TRACE*LITE
- ▼ = FLOOD LIGHT BULLET TYPE ECOSENSE
- = STREET LIGHT (TYP.) TYPE M-24 (SEE DETAIL)

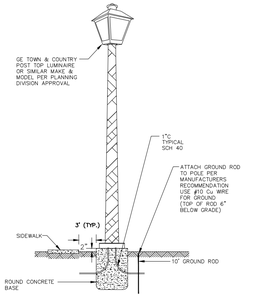

NOTE:

1. ALL WALKLIGHTS SHALL BE LOCATED ON 100' CENTERS. THE PLANNING DIVISION SHALL BE CONTACTED AT (386) 506-5600 TO FIELD VERIFY THE PROPOSED LOCATIONS FOR WALKLIGHTS.
2. ALL LIGHT POLES SHALL BE DESIGNED TO WITHSTAND 130 M.P.H. WIND SPEED.
3. THE STRING / SERIES OF WALK LIGHTS ADJACENT TO EACH PROJECT SHALL BE FITTED AND CONTROLLED BY ONE SINGLE SOLAR CELL.
4. MAINTENANCE AND OPERATION OF WALKLIGHTS SHALL BE THE RESPONSIBILITY OF THE HOMEOWNERS ASSOCIATION OR ADJACENT PROPERTY OWNER.

STANDARD CONSTRUCTION DETAIL
TRADITIONAL POST TOP

REV. 2/13

FILE NAME: M24.DWG
DETAIL REF: M-24

N

20 0 20 40
SCALE IN FEET

vhb.com
225 E. Robinson Street
Suite 300
Orlando, FL 32801
407.839.4006
Certificate of Authorization
Number FL #3932

Westport Reserve (Phase 2B)

City of Port Orange, Florida

No.	Revision	Date	Appvd.
1	Per Port Orange DRC Comments	5/12/16	
2	Per Port Orange P&Z Comments	7/01/16	

Designed by: ST
Checked by: CB
Issued for
Date: Jan. 12, 2016

Not Approved for Construction

Drawing Title
Landscape Lighting Plan

Drawing Number
L-501

Sheet of

Christopher J. Brown
LA 0000703
DATE: Jul. 01, 2016

Project Number
62444.00

ECOSENSE®
EcoSpec® Floodlight Bullet Mini

DATE ____ PROJ. ____ FIRM ____ TYPE

EcoSpec® Floodlight Bullet Mini is a compact architectural floodlight and landscape luminaire offering superior binning and a full range of optical solutions. The EcoSpec Floodlight Bullet Mini is indoor and outdoor rated with a robust cast aluminum housing and glare control options that include flush, angled, or full snoots.

The EcoSpec Floodlight Bullet Mini offers field-interchangeable optical lenses in a wide range of beam angle distributions to allow for simple optical design modifications without the need to replace the entire fixture. The integral driver connects directly to AC, line voltage power, and is dimmable through ELV or TRIAC dimming hardware. This luminaire also has great flexibility with 130deg vertical aiming and 360deg horizontal rotation making it ideal for any application.

Features:

- Dimmable: TRIAC / ELV (RP)
- Integral Driver / AC Power
- Flicker-Free
- Long Life (L70)
- Gore® Vent
- Field Interchangeable Accessory Lenses
- 360° Horizontal Rotation
- 130° Vertical Aiming

SPECIFICATIONS

PERFORMANCE	Correlated Color Temperature (K)	Lumen Output / Input Power (IES Measurements)	Efficacy (lm/W)
	2700K	746 lm / 11.3W	66 lm/W
	3000K	760 lm / 11.5W	66 lm/W
	3500K	890 lm / 11.3W	79 lm/W
	4000K	920 lm / 11.4W	81 lm/W
	Color Rendering Index	Min. 80	
	Color Consistency	2 Step MacAdam Ellipse	
	Rated Life	L70>100,000 hours @ 25°C* / L70 50,000 hours @ 50°C*	
		* Calculations for LED fixtures are based on measurements that comply with IES LM-80 testing procedures and IES TM-21 Calculator.	
ELECTRICAL	Power Consumption	10.9W Typical, 12W Maximum	
	Power Factor	Min. 0.90	
	Operating Voltage	100-120VAC, 220-240VAC, 100-277VAC (ETL), 50-60 Hz	
	Operating / Startup Temperature	-40°F to 122°F (-40°C to 50°C) [Storage: -40°F to 176°F (-40°C to 80°C)]	
CONTROL	Dimming	100-120VAC - TRIAC/ELV-RP*; 220-240VAC - TRIAC/ELV-RP*; 100-277VAC Non-Dim *ELV-RP = Electronic Low Voltage, Reverse Phase	
PHYSICAL	Dimensions	Dia. 4.06" x H 4.92" x L 8.78" (103mm x 125mm x 223mm)	
	Housing	Cast Aluminium; Clear Glass	
	Weight	4.4 lbs. (2.0 kg)	
	Cable	Flying Lead	
	Shielding	Optional 45° and 90° Cutoff Snoots, 360° locking rotation	
	Environment	Indoor / Outdoor; CE Certified IP66 / ETL Certified for Wet Locations	
	Beam Angle	Native: 11°x 11° / Accessory Lens: 20° / 30° / 40° / 60° / 80° / 10°x 60° / 30°x 60°	
	Mounting	1/2"NPT Threaded stem with locking nut	
FIXTURE RATING & CERTIFICATIONS	CE, ENEC, C-Tick Certified	Intertek	
	ETL Certified		
	RoHS Compliant	RoHS COMPLIANT	
WARRANTY	5 Year Warranty		

1 EcoSense Lighting Inc. 80 Broad Street 5th Floor New York, NY 10004 | Phone 212-228-8118 Fax 212-228-9113 Toll Free 855.632.6736 855.6.ECOSEN

Specifications subject to change without notice. Visit EcoSenseLighting.com for the most current specifications.

© 2012 EcoSense Lighting Inc. All rights reserved. EcoSense, the EcoSense logo, and EcoSpec are registered trademark of EcoSense Lighting Inc. BUL-S-130515-V1

ECOSENSELIGHTING.COM

ECOSENSE®
EcoSpec® Floodlight Bullet Mini

DATE ____ PROJ. ____ FIRM ____ TYPE

ORDERING INFORMATION
Choose the option that best suits your needs and write its corresponding code on the appropriate line to form the product code.

BUL-S - ____ - ____ - ____ - 11

MODEL	COLOR	VOLTAGE	FINISH	OPTIC
BUL-S	27 - 2700K	120-IC - 100-120VAC*	BZ - Bronze	11 - 11° x 11°
(Small)	30 - 3000K	220-IC - 220-240VAC**	BK - Black	(Sealed Base Optic)
	35 - 3500K	277-IC - 100-277VAC*	WH - White	
	40 - 4000K			

EXAMPLE: BUL-S - 40 - 120-IC - BK - 11

Mounting / Wiring Notes:

* 120VAC / 277VAC: 1) Internal Cable with 8" Lead 2) 1/2"NPT Mounting Thread

** 220VAC: 1) Internal Cable with 4'-0" (1.2m) Lead 2) M20x1.5P Mounting Thread 3) 220VAC Product comes standard with one 5" Architectural Mounting Canopy in the same finish as the ordered fixture.

ACCESSORIES
Order accessories as separate catalogue numbers in addition to the product above.

Shielding Options			
90° Cap (Standard with base fixture)			
90° Full Snoot, Bronze	BUL-S-90S-BZ	45° Snoot, Bronze	BUL-S-45S-BZ
90° Full Snoot, Black	BUL-S-90S-BK	45° Snoot, Black	BUL-S-45S-BK
90° Full Snoot, White	BUL-S-90S-WH	45° Snoot, White	BUL-S-45S-WH

Optical Film Lens (Light Shaping Diffuser)			
Standard Lens Distributions		Built-to-order Lens Distributions	
Optical Lens 20° x 20°	BUL-S-LSD-20	Optical Lens 30° x 30°	BUL-S-LSD-30
Optical Lens 40° x 40°	BUL-S-LSD-40	Optical Lens 80° x 80°	BUL-S-LSD-80
Optical Lens 60° x 60°	BUL-S-LSD-60	Optical Lens 30° x 60°	BUL-S-LSD-30x60
Optical Lens 10° x 60°	BUL-S-LSD-10x60		

2 EcoSense Lighting Inc. 80 Broad Street 5th Floor New York, NY 10004 | Phone 212-228-8118 Fax 212-228-9113 Toll Free 855.632.6736 855.6.ECOSEN

Specifications subject to change without notice. Visit EcoSenseLighting.com for the most current specifications.

© 2012 EcoSense Lighting Inc. All rights reserved. EcoSense, the EcoSense logo, and EcoSpec are registered trademark of EcoSense Lighting Inc. BUL-S-130515-V1

ECOSENSELIGHTING.COM

① UPLIGHT - ECOSENSE FLOOD LIGHT BULLET - (OR APPROVED EQUAL)
N.T.S.

d"series

D-Series Size 1
LED Flood Luminaire

Catalog Number ____ Notes ____ Type ____

Hit the Tab key or mouse over the page to see all interactive elements.

Specifications

EPA:	0.6 ft² (0.05 m²)
Depth:	3-1/8" (8.0 cm)
Width:	8-7/8" (22.4 cm)
Height:	7-3/4" (19.8 cm)
Overall Height	12" (30.5 cm)
Weight:	7.2 lbs (3.3 kg)

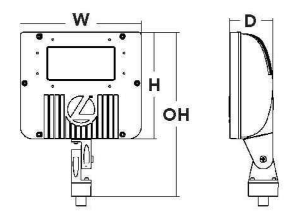

Introduction

The D-Series Size 1 Flood features precision optics to beautifully illuminate a variety of applications while its sleek, compact styling blends seamlessly with the environment.

The D-Series Flood reflector systems and cutting-edge chip-on-board LED technology produce low field-to-beam ratios for minimal spill light and incredible photometric performance. It's the ideal long-life replacement for 50 - 150W metal halide floods, with typical energy savings of 72% and expected service life of over 100,000 hours.

Ordering Information

EXAMPLE: DSXF1 LED 2 A530/40K MSP MVOLT THK DDBXD

DSXF1 LED							
Series	Light Engines	Performance Package	Distribution	Voltage	Mounting	Options	Finish (required)
DSXF1 LED	1 One COB engine 2 Two COB engines	530 mA options: A530/30K 3000K A530/40K 4000K A530/50K 5000K	NSP Narrow spot MSP Medium spot MFL Medium flood FL Flood WFL Wide flood WFR Wide flood, rectangular HMF Horizontal flood	MVOLT 1 120 1 208 1 240 1 277 1	Shipped included THK Knuckle with 1/2"NPS threaded pipe Shipped separately 2 DSXF1/2TS Tenon slipfitter (2-3/8" O.D. THK required)	Shipped installed PE Photocontrol, button style 3 SF Single fuse (120, 277V) 4 Shipped separately 2 UBV Upper/bottom visor (universal) FV Full visor VG Vandal guard	DDBXD Dark bronze DBLXD Black DNAXD Natural aluminum DWHXD White

Stock configurations are offered for shorter lead times:

Standard Part Number	Stock Part Number
DSXF1 LED 1 A530/40K WFL MVOLT THK DDBXD	DSXF1 LED 1 40K
DSXF1 LED 1 A530/50K WFL MVOLT THK DDBXD	DSXF1 LED 1 50K
DSXF1 LED 2 A530/40K WFL MVOLT THK DDBXD	DSXF1 LED 2 40K
DSXF1 LED 2 A530/50K WFL MVOLT THK DDBXD	DSXF1 LED 2 50K

Accessories
Ordered and shipped separately.

DSXF1/2TS DDBXD U	Slipfitter for 1-1/4" to 2-3/8" OD tenons; mates with 1/2" threaded knuckle (specify finish)
FRWB DDBXD U	Radius wall bracket, 2-3/8" OD tenon (specify finish)
FSPB DDBXD U	Steel square pole bracket, 2-3/8" OD tenon (specify finish)
DSXF1UBV DDBXD U	Upper/bottom visor accessory (specify finish)
DSXF1FV DDBXD U	Full visor accessory (specify finish)
DSXF1VG U	Vandal guard accessory

For more mounting options, visit our Floodlighting Accessories pages.

NOTES
1. MVOLT driver operates on any line voltage from 120-277V (50/60 Hz). Specify 120, 208, 240 or 277 options only when ordering with fusing (SF option) or photocontrol (PE).
2. Also available as separate accessories; see Accessories information at left.
3. Photocontrol (PE) requires 120, 208, 240 or 277 voltage option.
4. Single fuse (SF) requires 120 or 277 voltage option.

LITHONIA LIGHTING. One Lithonia Way • Conyers, Georgia 30012 • Phone: 800.279.8041 • Fax: 770.918.1209 • www.lithonia.com

© 2012-2013 Acuity Brands Lighting, Inc. All rights reserved.

Performance Data

Lumen Output

Lumen values are from photometric tests performed in accordance with IESNA LM-79-08. Data is considered to be representative of the configurations shown, within the tolerances allowed by Lighting Facts. Actual wattage may differ by +/- 8% when operating between 120-480V +/- 10%. Contact factory for performance data on any configurations not shown here.

Light Engines	Drive Current (mA)	Performance Package	System Watts	Dist. Type	Field Angle °H	Field Angle °V	Beam Angle °H	Beam Angle °V	40K (4000K, 70 CRI) Max Cd	Lumens	LPW	50K (5000K, 67 CRI) Max Cd	Lumens	LPW
1	530	A530/--K	21W	NSP	48	49	19	19	7300	1388	66	7277	1383	66
				MSP	50	48	24	23	6740	1555	74	6719	1550	74
				MFL	60	60	47	46	2806	1662	79	2797	1657	79
				FL	85	84	63	62	1855	1807	86	1849	1802	86
				WFL	106	106	71	72	1391	1900	90	1387	1894	90
				WFR	107	88	85	64	1386	1943	93	1381	1937	92
				HMF	100	62	80	13	1259	613	29	1255	611	29
2	530	A530/--K	41W	NSP	48	49	19	19	13,803	2624	64	13,760	2616	64
				MSP	50	48	24	23	12,744	2941	72	12,704	2932	72
				MFL	60	60	47	46	5305	3143	77	5288	3133	76
				FL	85	84	63	62	3507	3418	83	3496	3407	83
				WFL	106	106	71	72	2630	3593	88	2622	3582	87
				WFR	107	88	85	64	2620	3674	90	2612	3663	89
				HMF	100	62	80	13	2381	1159	28	2374	1156	28

Lumen Ambient Temperature (LAT) Multipliers

Use these factors to determine relative lumen output for average ambient temperatures from 0-40°C (32-104°F).

Ambient		Lumen Multiplier
0°C	32°F	1.05
10°C	50°F	1.03
20°C	68°F	1.01
25°C	77°F	1.00
30°C	86°F	0.99
40°C	104°F	0.97

Projected LED Lumen Maintenance

Data references the extrapolated performance projections for the DSXF1 LED 2 A530 platform in a 40°C ambient, based on 8400 hours of LED testing (tested per IESNA LM-80-08 and projected per IESNA TM-21-11).

To calculate LLF, use the lumen maintenance factor that corresponds to the desired number of operating hours below. For other lumen maintenance values, contact factory.

Operating Hours	0	25,000	50,000	100,000
Lumen Maintenance Factor	1.0	0.94	0.90	0.84

Electrical Load

Light Engines	Drive Current (mA)	System Watts	Current (A) 120	208	240	277	347	480
1	530	21W	0.19	0.11	0.10	0.08	-	-
2	530	41W	0.38	0.22	0.19	0.16	-	-

Photometric Diagrams

To see complete photometric reports or download .ies files for this product, visit Lithonia Lighting's D-Series Flood Size 1 homepage.

Isocandela plots for the DSXF1 LED 2 A530/40K.

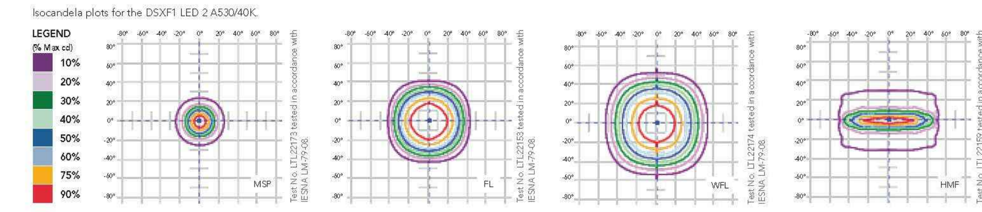

FEATURES & SPECIFICATIONS

INTENDED USE
The sleek design of the D-Series Size 1 Flood reflects the embedded high performance LED technology. It is ideal for landscape, signage and accent lighting in many commercial and residential applications.

CONSTRUCTION
Die-cast aluminum housing has integral heat sink fins to optimize thermal management through conductive and convective cooling. The LED driver is mounted in direct contact with the casting to promote low operating temperature and long life. Housing is completely sealed against moisture and environmental contaminants (IP65). Low EPA (0.6 ft²) for optimized wind loading.

FINISH
Exterior parts are protected by a zinc-infused Super Durable TGIC thermoset powder coat finish that provides superior resistance to corrosion and weathering. A tightly controlled multi-stage process ensures a minimum 3 mils thickness for a finish that can withstand extreme climate changes without cracking or peeling.

OPTICS
A variety of precision-molded vacuum-metallized specular reflectors are engineered for superior field-to-beam ratios, uniformity and spacing. Light engines are available in 3000K (80 CRI min.), 4000K (70 CRI min.) or 5000K (67 CRI min.) configurations. Optional visors offer additional versatility.

ELECTRICAL
Light engine(s) consist of chip-on-board (COB) LEDs directly coupled to the housing to maximize heat dissipation and promote long life (100,000 hrs at 40°C, L84). Single-engine unit uses a Class 2 electronic driver; dual-engine unit uses a Class 1 electronic driver. Both drivers have a power factor >90%, THD <20%, and an expected life of 100,000 hours. Surge protection meets a minimum Category C Low operation (per ANSI/IEEE C62.41.2).

INSTALLATION
Integral adjustable knuckle with 1/2-14 NPS threaded pipe facilitates quick and easy installation to a variety of mounting accessories. This secure connection enables the D-Series Size 1 to withstand up to a 1.5 G vibration load rating per ANSI C136.31.

LISTINGS
CSA certified to U.S. and Canadian standards. Luminaire is IP65 rated. Rated for -40°C minimum ambient.

WARRANTY
Five year limited warranty. Full warranty terms located at www.acuitybrands.com/CustomerResources/Terms_and_conditions.aspx.

Note: Specifications subject to change without notice.

LITHONIA LIGHTING. One Lithonia Way • Conyers, Georgia 30012 • Phone: 800.279.8041 • Fax: 770.918.1209 • www.lithonia.com

© 2012-2013 Acuity Brands Lighting, Inc. All rights reserved. Rev. 07/31/2013

② SIGN LIGHTING - WITH UPPER / BOTTOM VISORY ACCESSORY - (OR APPROVED EQUAL)
N.T.S.

vhb.com

vhb

225 E. Robinson Street
Suite 300
Orlando, FL 32801
407.839.4006
Certificate of Authorization
Number FL #3932

Westport Reserve (Phase 2B)

City of Port Orange, Florida

No.	Revision	Date	Appvd.
1	Per Port Orange DRC Comments	5/12/16	
2	Per Port Orange P&Z Comments	7/01/16	

Designed by ST | Checked by CB

Issued for | Date Jan. 12, 2016

Not Approved for Construction

Drawing Title
Landscape Lighting Details

Drawing Number
L-550

Sheet ____ of ____

Christopher J. Brown
LA 0000703
DATE: Jul. 01, 2016

Project Number
62444.00

Saved Friday, May 06, 2016 4:10:31 PM STOFTE Plotted Friday, July 01, 2016 1:54:35 PM Tofte, Shawn

WESTPORT RESERVE
(PHASE 2B)

City of Port Orange, Florida

FINAL SITE ENGINEERING PLANS

January 2016

Parcel ID. Number
6214-01-01-0014
6214-01-01-0015

Drawing Index

Civil

C01	COVER SHEET
C02-C03	GENERAL NOTES
C04	OVERALL DEVELOPMENT PLAN
C04A	PHASE 2B TREE PRESERVATION PLAN 2
C04B	OVERALL TREE PRESERVATION PLAN 2
C05	EXISTING CONDITIONS PLAN
C06	EROSION CONTROL PLAN
C07	OVERALL SITE PLAN
C07A	COMMON OPEN SPACE 2
C08	SITE PLAN
C09	UTILITY PLAN
C10-C11	LOT & BLOCK GRADING PLAN
C12	MASS GRADING PLAN
C13-C16	PLAN & PROFILES
C17	STRIPING PLAN
C17A	TOWN WEST BOULEVARD TURN LANE 2
C18-C23	CITY ROAD/DRAINAGE DETAILS
C24-C26	CITY SEWER DETAILS
C27-C29	CITY WATER DETAILS
C30-C31	CITY RECLAIMED WATER DETAILS
C32	TYPICAL PAVING SECTIONS

LEGAL DESCRIPTION:

A PORTION OF SECTIONS 13 AND 14, TOWNSHIP 16 SOUTH, RANGE 32 EAST, VOLUSIA COUNTY, FLORIDA, BEING MORE PARTICULARLY DESCRIBED AS FOLLOWS:
BEGIN AT THE OCCUPIED SOUTHWEST CORNER OF THE SOUTHWEST 1/4 OF SAID SECTION 13; THENCE RUN S01°05'50"E A DISTANCE OF 190.22 FEET TO THE SOUTHEAST CORNER OF SAID SECTION 14; THENCE RUN S88°57'35"W ALONG THE EASTERLY EXTENSION OF THE OCCUPIED NORTHERLY LINE OF TOMOKA FARMS, AS RECORDED IN MAP BOOK 6, PAGE 192, AND RE-RECORDED IN MAP BOOK 22, PAGES 168 AND 169, PUBLIC RECORDS OF VOLUSIA COUNTY, FLORIDA, A DISTANCE OF 2596.98 FEET TO THE EASTERLY RIGHT-OF-WAY LINE OF TOMOKA FARMS ROAD, PER ROAD BOOK 1, PAGE 28, PUBLIC RECORDS OF VOLUSIA COUNTY, FLORIDA; THENCE RUN THE FOLLOWING THREE COURSES ALONG SAID EASTERLY RIGHT-OF-WAY LINE: N16°08'29"W A DISTANCE OF 833.38 FEET; N10°03'47"W A DISTANCE OF 222.54 FEET; N06°47'13"W A DISTANCE OF 201.00 FEET; THENCE LEAVING SAID EASTERLY RIGHT-OF-WAY LINE RUN N87°42'50"E A DISTANCE OF 252.99 FEET; THENCE N27°43'56"W A DISTANCE OF 32.45 FEET; THENCE N31°24'40"W A DISTANCE OF 89.27 FEET; THENCE N32°35'34"W A DISTANCE OF 78.98 FEET; THENCE N07°21'34"W A DISTANCE OF 60.82 FEET; THENCE N00°19'32"W A DISTANCE OF 59.57 FEET; THENCE N61°15'13"E A DISTANCE OF 126.00 FEET; THENCE N65°48'17"E A DISTANCE OF 65.09 FEET; THENCE N20°03'24"E A DISTANCE OF 111.70 FEET; THENCE N84°27'18"E A DISTANCE OF 417.64 FEET TO A POINT OF CURVATURE OF A CURVE CONCAVE SOUTHEASTERLY, HAVING A RADIUS OF 2065.94 FEET, A CENTRAL ANGLE OF 05°52'38", A CHORD BEARING OF N87°23'37"E, A CHORD DISTANCE OF 211.82 FEET; THENCE RUN NORTHEASTERLY ALONG THE ARC OF SAID CURVE A DISTANCE OF 211.92 FEET; THENCE S89°40'04"E A DISTANCE OF 2504.37 FEET; THENCE S00°19'55"W A DISTANCE OF 40.25 FEET TO A POINT OF CURVATURE ON A CURVE CONCAVE NORTHEASTERLY, HAVING A RADIUS OF 1250.00 FEET, A CENTRAL ANGLE OF 57°05'19", A CHORD BEARING OF S28°12'44"E, A CHORD DISTANCE OF 1194.59 FEET; THENCE RUN SOUTHEASTERLY ALONG THE ARC OF SAID CURVE, A DISTANCE OF 1245.48 FEET TO A POINT OF REVERSE CURVATURE OF A CURVE CONCAVE SOUTHWESTERLY, HAVING A RADIUS OF 483.51 FEET, A CENTRAL ANGLE OF 56°47'27", A CHORD BEARING OF S28°21'40"E, A CHORD DISTANCE OF 459.87 FEET; THENCE RUN SOUTHEASTERLY ALONG THE ARC OF SAID CURVE A DISTANCE OF 479.25 FEET TO THE OCCUPIED SOUTH LINE OF SAID SOUTHWEST 1/4 OF SECTION 13; THENCE S89°26'31"W ALONG SAID OCCUPIED SOUTH LINE OF THE SOUTHWEST 1/4, A DISTANCE OF 1376.04 FEET TO THE POINT OF BEGINNING.
TOGETHER WITH:
A PORTION OF SECTION 13, TOWNSHIP 16 SOUTH, RANGE 32 EAST, VOLUSIA COUNTY, FLORIDA, BEING MORE PARTICULARLY DESCRIBED AS FOLLOWS:
COMMENCE AT THE OCCUPIED SOUTHWEST CORNER OF THE SOUTHWEST 1/4 OF SAID SECTION 13; THENCE RUN N89°26'31"E ALONG THE OCCUPIED SOUTH LINE OF SAID SOUTHWEST 1/4 OF SECTION 13, A DISTANCE OF 1476.04 FEET TO A NON-TANGENT POINT ON A CURVE CONCAVE SOUTHWESTERLY, HAVING A RADIUS OF 583.51 FEET, A CENTRAL ANGLE OF 56°41'21", A CHORD BEARING OF N28°24'43"W, A CHORD DISTANCE OF 554.07 FEET FOR A POINT OF BEGINNING; THENCE RUN NORTHWESTERLY ALONG THE ARC OF SAID CURVE A DISTANCE OF 577.33 FEET TO A POINT OF REVERSE CURVATURE ON A CURVE CONCAVE NORTHEASTERLY, HAVING A RADIUS OF 1150.00 FEET, A CENTRAL ANGLE OF 57°05'19", A CHORD BEARING OF N28°12'44"W, A CHORD DISTANCE OF 1099.03 FEET; THENCE RUN NORTHWESTERLY ALONG THE ARC OF SAID CURVE A DISTANCE OF 1145.84 FEET; THENCE N00°19'55"E A DISTANCE OF 40.25 FEET; THENCE S89°40'04"E A DISTANCE OF 50.47 FEET TO A POINT ON THE EASTERLY LINE OF THE 30 FOOT FLORIDA GAS TRANSMISSION COMPANY RIGHT-OF-WAY EASEMENT RECORDED IN OFFICIAL RECORDS BOOK 669, PAGE 1, PUBLIC RECORDS OF VOLUSIA COUNTY, FLORIDA; THENCE S35°50'40"E ALONG SAID EASTERLY LINE, A DISTANCE OF 1644.32 FEET; THENCE S28°31'44"E ALONG SAID EASTERLY LINE, A DISTANCE OF 181.84 FEET TO THE OCCUPIED SOUTH LINE OF THE AFORESAID SOUTHWEST 1/4 OF SECTION 13; THENCE S89°26'31"W ALONG SAID OCCUPIED SOUTH LINE OF THE SOUTHWEST 1/4, A DISTANCE OF 317.26 FEET TO THE POINT OF BEGINNING.
CONTAINING: 148.747 ACRES, MORE OR LESS.

Developer / Applicant / Owner

2 EDGE COVE, LLC
370 CENTERPOINTE CIRCLE, SUITE 1136
ALTAMONTE SPRINGS, FLORIDA 32701
CONTACT: M. SCOTT STEARNS, P.E., LEED AP
PHONE: 407-834-9560

Civil Engineer

DEWBERRY
800 NORTH MAGNOLIA AVE., SUITE 1000
ORLANDO, FLORIDA 32803
CONTACT: DANIELLE VAN DE LOO, P.E.
PHONE: (407) 843-5120

Survey-Boundary & Topographic

DEWBERRY
800 NORTH MAGNOLIA AVE., SUITE 1000
ORLANDO, FLORIDA 32803
CONTACT: THOMAS CAMDEN
PHONE: (407) 843-5120

Geotechnical Engineer

UNIVERSAL ENGINEERING SCIENCES
911 BEVILLE ROAD SUITE 3
SOUTH DAYTONA, FL 32119
CONTACT: BRIAN C. POHL, P.E.
PHONE: (386)756-1105

Traffic Engineer

TRAFFIC ENGINEERING DATA SOLUTIONS, INC.
80 SPRING VISTA DRIVE
DEBARY, FL 32713
CONTACT: CHRIS J. WALSH, P.E.
PHONE: (386)753-0558

Landscape Architect

VHB
225 E. ROBINSON STREET, SUITE 300
ORLANDO, FL 32801
CONTACT: CHRISTOPHER BROWN, ASLA
PHONE: (407)893-4725

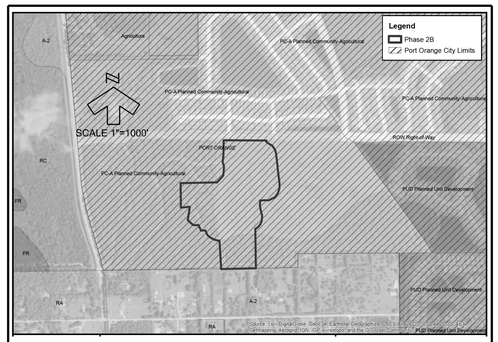

VICINITY ZONING MAP 2

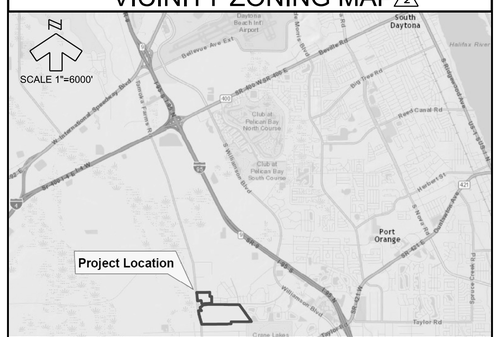

SITE LOCATION

THIS IS TO CERTIFY THAT THE ROADWAY CONSTRUCTION PLANS AND SPECIFICATIONS AS CONTAINED HEREIN WERE DESIGNED TO APPLICABLE STANDARDS AS SET FORTH IN THE "MANUAL OF UNIFORM MINIMUM STANDARDS FOR DESIGN, CONSTRUCTION AND MAINTENANCE FOR STREETS AND HIGHWAYS" AS PREPARED BY FLORIDA DEPARTMENT OF TRANSPORTATION.

Dewberry

Dewberry Engineers Inc.
800 NORTH MAGNOLIA AVE
ORLANDO, FL 32803
SUITE 1000
PHONE: 407.843.5120
ENGINEERING BUSINESS -8794

WESTPORT RESERVE
(PHASE 2B)

PORT ORANGE, FL

SEAL

Danielle Van De Loo
FL PE # 74676
7/1/2016

No.	DATE	BY	Description
3	7-1-16	TFS	REV PER CITY COMMENTS
2	4-21-16	KJK	REV PER CITY COMMENTS
1	3-16-16	TFS	REV PER COMMENTS

REVISIONS

DRAWN BY	TFS
APPROVED BY	DMV
CHECKED BY	NPS
DATE	JANUARY 2016
DATUM	NAVD 88

TITLE

COVER SHEET

PROJECT NO. 50079046 (CC 1)

C01

SHEET NO.

...\CC1-SF PH1 Cover.dgn 3:47:15 PM

GENERAL

1. UNLESS OTHERWISE SPECIFIED, ALL CONSTRUCTION SHALL BE PERFORMED CONSISTENT WITH THE MOST RECENT PUBLICATION OF THE FOLLOWING CODES, STANDARDS AND SPECIFICATIONS AS WELL AS THE LATEST EDITIONS OF ALL OTHER APPLICABLE SPECIFICATIONS & STANDARDS:
   CITY OF PORT ORANGE, FLORIDA
   ST. JOHNS RIVER WATER MANAGEMENT DISTRICT (SJRWMD)
   FLORIDA DEPARTMENT OF ENVIRONMENTAL PROTECTION (FDEP)
   FLORIDA DEPARTMENT OF TRANSPORTATION (FDOT)
   AMERICANS WITH DISABILITIES ACT (ADA) BY U.S. DEPARTMENT OF JUSTICE
   "MANUAL ON UNIFORM TRAFFIC CONTROL DEVICES" (MUTCD) PUBLISHED BY THE U.S. DEPARTMENT OF TRANSPORTATION, FEDERAL HIGHWAY ADMINISTRATION
2. ALL CONSTRUCTION IS TO BE GOVERNED BY ALL APPLICABLE FEDERAL, STATE AND LOCAL LAWS, ORDINANCES, BUILDING AND SAFETY CODES.
3. IN THE EVENT THAT ANY STANDARDS OR SPECIFICATIONS AS DESCRIBED HEREIN ARE IN CONFLICT WITH EACH OTHER, OR THAT SHOWN IN THE PLANS, THE MORE STRINGENT CRITERIA WILL APPLY. CONTRACTOR SHALL NOTIFY THE ENGINEER OF RECORD IMMEDIATELY AND IN WRITING SHOULD THE MORE STRINGENT CRITERIA BE UNCLEAR, FOR ENGINEER'S INTERPRETATION OF THE MORE STRINGENT CRITERIA TO BE USED.
4. THESE PLANS WERE BASED ON THE BOUNDARY AND TOPOGRAPHIC SURVEY BY DEWBERRY INC.
5. ELEVATIONS BASED ON NORTH AMERICAN VERTICAL DATUM OF 1988 (NAVD 88) DERIVED FROM NATIONAL GEODETIC SURVEY MONUMENT DESIGNATION "L 605", BEING A ROUND CONCRETE MONUMENT WITH SURVEY DISK STAMPED "L 605 2004", LOCATED 710 FEET NORTH OF THE APPROXIMATE CENTERLINE OF SHUNZ ROAD, 242 FEET NORTH-NORTHWEST OF A FIRE HYDRANT, 226 FEET NORTH-NORTHWEST OF A POWER POLE, 81.6 FEET SOUTH OF A POWER POLE, 53.5 FEET WEST-SOUTHWEST OF THE CENTERLINE OF COUNTY ROAD 415, 2.8 FEET EAST OF A HOG-WIRE FENCE AND 2.7 FEET EAST OF A CARSONITE WITNESS POST, IN SECTION 11, TOWNSHIP 16 SOUTH, RANGE 32 EAST, VOLUSIA COUNTY, FLORIDA, HAVING AN ELEVATION OF 23.79 FEET.
   THE CORPSCON ELEVATION DATUM CONVERSION FROM NAVD 88 TO NATIONAL GEODETIC VERTICAL DATUM OF 1929 (NGVD 29) = +1.142 FEET.
   THE PLANTATION DEVELOPMENT ELEVATION DATUM CONVERSION FROM NAVD 88 TO NGVD 29 = +1.53 FEET.
6. THESE PLANS WERE BASED ON THE GEOTECHNICAL REPORT(S) PROJECT NUMBER 0430.1500159.0000 BY UNIVERSAL ENGINEERING SCIENCES. IT IS THE CONTRACTOR'S RESPONSIBILITY TO ACQUIRE A COPY OF THE REPORT(S) FROM THE GEOTECHNICAL ENGINEER, FAMILIARIZE THEMSELVES WITH THE CONDITIONS AS DESCRIBED IN THE REPORT(S), AND COMPLY WITH ALL RECOMMENDATIONS MADE IN THE REPORT(S) SPECIFICALLY FOR SOIL PREPARATION ON THE SITE. IT IS THE CONTRACTOR'S RESPONSIBILITY TO OBTAIN A COPY ALL SUPPLEMENTAL REPORTS FOR THIS PROJECT FROM THE OWNER AND TO FOLLOW THE SUPPLEMENTAL REPORTS' RECOMMENDATIONS.
7. GEOTECHNICAL RECOMMENDATIONS OR RECOMMENDATIONS AS PROVIDED IN SUPPLEMENTAL REPORTS BY OTHERS ARE NOT THE RESPONSIBILITY OF DEWBERRY INC., WHO HAS RELIED UPON THE REFERENCED GEOTECHNICAL REPORT(S) IN THE PREPARATION OF THE PLANS. ANY CONFLICT BETWEEN INFORMATION CONTAINED IN THE REPORT(S) AND THESE PLANS SHALL BE REPORTED TO THE ENGINEER AND OWNER IMMEDIATELY AND IN WRITING. DEWBERRY INC. ASSUMES NO RESPONSIBILITY FOR THE CORRECTNESS, COMPLETENESS, OR ACCURACY OF THE REPORT(S). WHEN THE PLANS AND/OR SPECIFICATIONS CONTAIN THE RESULTS OF A SOILS SURVEY, THE CONTRACTOR SHALL NOT ASSUME THE INFORMATION IS A GUARANTEE OF THE DEPTH, EXTENT OR CHARACTER OF MATERIAL PRESENT. IT IS THE RESPONSIBILITY OF THE CONTRACTOR TO MAKE A NECESSARY EXAMINATION OF THE SITE AND OF ANY MATERIAL SOURCES INDICATED ON THE PLANS TO BE INFORMED OF THE CONDITIONS UNDER WHICH CONSTRUCTION IS TO OCCUR.
8. THE CONTRACTOR SHALL OBTAIN FROM THE OWNER COPIES OF PERMITS FOR ALL AGENCIES HAVING JURISDICTION, SUCH AS GOVERNMENTAL, REGULATORY OR LOCAL ENTITIES. THE CONTRACTOR SHALL BE EXPECTED TO REVIEW AND ABIDE BY ALL THE TERMS, CONDITIONS, REQUIREMENTS AND LIMITATIONS SET FORTH IN ALL OF THESE PERMITS. A COPY OF THE PERMITS SHALL BE KEPT ON THE CONSTRUCTION SITE AND MADE AVAILABLE FOR REVIEW AT ALL TIMES.
9. THE STANDARDS AND SPECIFICATIONS AS LISTED HEREIN, THE GEOTECHNICAL REPORT(S), BOUNDARY AND TOPOGRAPHIC SURVEY(S), SWPPP AND REQUIRED PERMITS ARE HEREBY INCORPORATED ALONG WITH THE PLANS BY DEWBERRY INC. AS THE COMPLETE "SITE CIVIL CONSTRUCTION DOCUMENTS."
10. IF ITEMS APPEARING TO BE HISTORICAL OR ARCHEOLOGICAL ARTIFACTS ARE DISCOVERED AT ANY TIME DURING CONSTRUCTION WITHIN THE PROJECT LIMITS, IMMEDIATE NOTIFICATION SHALL BE PROVIDED TO THE OWNER, THE ENGINEER, AND THE BUREAU OF HISTORICAL PRESERVATION, DIVISION OF HISTORICAL RESOURCES R.A. GRAY BUILDING, 500 S. BRONOUGH ST. TALLAHASSEE, FLORIDA 32399-0250.

CONTRACTOR RESPONSIBILITIES

1. CONTRACTOR SHALL FAMILIARIZE HIMSELF WITH THE SITE, INCLUDING ALL SURFACE AND SUBSURFACE CONDITIONS, THE WORK REQUIRED AND ALL OTHER CONDITIONS THAT MAY EFFECT THE SUCCESSFUL COMPLETION OF THE JOB PRIOR TO COMMENCEMENT OF WORK.
2. THE LOCATION OF EXISTING UTILITY SERVICES, FACILITIES, AND STRUCTURAL FEATURES SHOWN ON THESE PLANS HAVE BEEN DETERMINED FROM THE BEST INFORMATION AND ARE PROVIDED FOR THE CONVENIENCE OF THE CONTRACTOR. THE ENGINEER DOES NOT GUARANTEE THE ACCURACY OR THE COMPLETENESS OF THE LOCATION INFORMATION PROVIDED. ANY INACCURACY OR OMISSION IN SUCH INFORMATION SHALL NOT RELIEVE THE CONTRACTOR OF HIS RESPONSIBILITY TO PROTECT THE EXISTING FEATURES FROM DAMAGE OR UNSCHEDULED INTERRUPTION OF SERVICE. SHOULD A DISCREPANCY ARISE BETWEEN THESE PLANS AND ACTUAL FIELD CONDITIONS, WHICH WOULD APPRECIABLY AFFECT THE EXECUTION OF THESE PLANS, THE CONTRACTOR SHALL STOP ALL CONSTRUCTION AND NOTIFY THE ENGINEER IMMEDIATELY.
3. THE CONTRACTOR SHALL GIVE ALL NOTICES AND COMPLY WITH ALL LAWS, ORDINANCES, RULES, REGULATIONS AND PERMIT CONDITIONS BEARING ON THE CONDUCT OF THE WORK, AS DRAWN AND SPECIFIED. IF THE CONTRACTOR OBSERVES THAT THE DRAWINGS AND SPECIFICATIONS ARE AT VARIANCE THEREWITH, HE SHALL PROMPTLY NOTIFY THE ENGINEER, IN WRITING, AND ANY NECESSARY CHANGES SHALL BE ADJUSTED, AS PROVIDED IN THE AGREEMENT FOR CHANGES IN THE WORK.
4. THE CONTRACTOR SHALL BE RESPONSIBLE FOR THE MAINTENANCE OF ALL LANDSCAPE BUFFERS, RETENTION AND DETENTION FACILITIES UNTIL THE PROJECT HAS BEEN ACCEPTED BY THE OWNER. ALL DISTURBED AREAS SHALL BE RETURNED TO EQUAL OR BETTER CONDITION.
5. THE CONTRACTOR SHALL BE RESPONSIBLE TO THE OWNER AND THE ENGINEER FOR THE ACTS AND OMISSIONS OF CONTRACTOR'S EMPLOYEES AND ALL HIS SUBCONTRACTORS AND THEIR AGENTS AND EMPLOYEES AND OTHER PERSONS PERFORMING ANY OF THE WORK UNDER A CONTRACT WITH THE CONTRACTOR.
6. ALL WORK AND FURNISHED MATERIALS SHALL CONFORM WITH THE LINES, GRADES, GRADING SECTIONS, CROSS SECTIONS, DIMENSIONS, MATERIAL REQUIREMENTS AND TESTING REQUIREMENTS THAT ARE SPECIFIED IN THE CONTRACT, PLANS, DETAILS OR SPECIFICATIONS.
7. THE CONTRACTOR SHALL BE RESPONSIBLE FOR MAKING ALL NECESSARY ARRANGEMENTS WITH GOVERNMENTAL DEPARTMENTS, PUBLIC UTILITIES, PUBLIC CARRIERS, SERVICE COMPANIES, AND CORPORATIONS OWNING OR CONTROLLING ROADWAYS, RAILWAYS, WATER, SEWER, GAS, ELECTRICAL, TELEPHONE, AND TELEGRAPH FACILITIES SUCH AS PAVEMENTS, TRACKS, PIPING, WIRES, CABLES, CONDUITS, POLES, GUYS, OR OTHER SIMILAR FACILITIES, INCLUDING INCIDENTAL STRUCTURES CONNECTED THEREWITH THAT ARE ENCOUNTERED IN THE WORK IN ORDER THAT SUCH ITEMS MAY BE PROPERLY SUPPORTED, PROTECTED OR LOCATED.
8. PRIOR TO COMMENCING WORK, THE CONTRACTOR SHALL FURNISH, ERECT AND MAINTAIN ALL BARRICADES, LIGHTS, WARNING SIGNS, AND PAVEMENT MARKINGS FOR HAZARDS AND THE CONTROL OF TRAFFIC THROUGH THE CONSTRUCTION ZONE IN CONFORMITY WITH THE ALL AGENCIES HAVING JURISDICTION STANDARDS TO EFFECTIVELY PREVENT ACCIDENTS AT ALL LOCATIONS WHERE CONSTRUCTION CAUSES AN OBSTRUCTION TO THE NORMAL FLOW OF TRAFFIC OR CREATES A HAZARD IN ANY WAY TO THE PUBLIC.
9. IN THE EVENT THE CONTRACTOR DISCOVERS ANY ERRORS OR OMISSIONS IN THE PLANS HE SHALL IMMEDIATELY NOTIFY THE OWNER OR OWNER'S AGENT.
10. THE CONTRACTOR SHALL COMPLY WITH ALL LEGAL LOAD RESTRICTIONS IN THE HAULING OF MATERIALS ON PUBLIC ROADS BEYOND THE LIMITS OF THE WORK. A SPECIAL PERMIT WILL NOT RELIEVE THE CONTRACTOR OF LIABILITY FOR ANY DAMAGE THAT MAY RESULT FROM THE MOVING OF MATERIALS AND EQUIPMENT.
11. THE CONTRACTOR SHALL BE RESPONSIBLE FOR PROTECTING ALL EXISTING SURVEY MONUMENTATION, SUCH AS THE PRESERVATION OF ALL PERMANENT REFERENCE MONUMENTS, PERMANENT CONTROL POINTS, PERMANENT BENCH MARKS, PROPERTY CORNERS, POINTS OR MARKERS. IN THE EVENT ANY MONUMENTATION IS DISTURBED, IT SHALL BE RESTORED BY A FLORIDA LICENSED SURVEYOR AND MAPPER SELECTED BY THE OWNER AT THE CONTRACTOR'S EXPENSE.
12. THE OWNER, OWNER'S REPRESENTATIVES AND INSPECTORS OF APPLICABLE GOVERNMENT AGENCIES HAVING JURISDICTION, SHALL AT ALL TIMES HAVE ACCESS TO THE WORK SITE WHEREVER AND WHENEVER IT IS IN PREPARATION OR PROGRESS. THE CONTRACTOR SHALL PROVIDE PROPER FACILITIES FOR SUCH ACCESS AND INSPECTIONS.
13. IT IS THE CONTRACTOR'S RESPONSIBILITY TO TAKE ALL REASONABLE AND PRUDENT PRECAUTIONS TO INSURE THAT ALL COMPLETED WORK, MATERIALS AND EQUIPMENT STORED ON SITE ARE SAFE AND SECURED FROM UNAUTHORIZED ACCESS OR USE. SUCH PRECAUTIONS MAY INCLUDE INSTALLATION OF SIGNS, FENCES, OR POSTING OF SECURITY GUARDS.
14. CONTRACTOR SHALL, AT ALL TIMES, UTILIZE ALL NORMALLY ACCEPTED AND REASONABLY EXPECTED SAFETY PRACTICES AND COMPLY WITH ALL FEDERAL, STATE AND LOCAL REGULATIONS, ORDINANCES AND GUIDELINES PERTAINING TO SAFE UTILIZATION OF EQUIPMENT OR MATERIALS AS PUBLISHED BY MANUFACTURER.
15. ADEQUATE TRAFFIC CONTROL, SIGNAGE, BARRICADES AND FLAGMAN SERVICES SHALL BE FURNISHED AND MAINTAINED BY THE CONTRACTOR AT ALL POINTS WHERE CONSTRUCTION EQUIPMENT ENGAGED IN WORK ENTERS ONTO OR CROSSES FUNCTIONING TRAFFIC-CARRYING ROADWAY.
16. THOSE PARTS OF WORK IN PLACE THAT ARE SUBJECT TO DAMAGE BECAUSE OF OPERATIONS BEING CARRIED ON ADJACENT THERETO SHALL BE COVERED, BOARDED UP OR SUBSTANTIALLY ENCLOSED WITH ADEQUATE PROTECTION BY THE CONTRACTOR AT CONTRACTOR'S EXPENSE, PROTECTING WORK COMPLETED.
17. THE CONTRACTOR SHALL COMPLY IN EVERY RESPECT WITH THE FEDERAL OCCUPATIONAL HEALTH AND SAFETY ACT OF 1970 AND ALL RULES AND REGULATIONS NOW OR HEREAFTER IN EFFECT UNDER SAID ACT, AND THE CONTRACTOR FURTHER AGREES TO COMPLY WITH ANY AND ALL APPLICABLE STATE LAWS AND REGULATIONS PERTAINING TO JOB SAFETY AND HEALTH.
18. THE CONTRACTOR SHALL PROTECT AND KEEP OWNER (INCLUDING THEIR AGENTS AND EMPLOYEES) FREE AND HARMLESS FROM ANY AND ALL LIABILITY, PUBLIC OR PRIVATE, PENALTIES, CONTRACTUAL OR OTHERWISE, LOSSES, DAMAGES, COSTS, ATTORNEY'S FEES, EXPENSES, CAUSES OF ACTION, CLAIMS OR JUDGMENTS RESULTING FROM THE FEDERAL OCCUPATIONAL HEALTH AND SAFETY ACT OF 1970 AS AMENDED OR ANY RULE OR REGULATION PROMULGATED THEREUNDER OR OF ANY STATE LAWS OR REGULATIONS PERTAINING TO JOB SAFETY AND HEALTH ARISING OUT OF OR IN ANY WAY CONNECTED WITH THE PERFORMANCE OF WORK OR WORK TO BE PERFORMED UNDER THIS CONTRACT, AND CONTRACTOR SHALL INDEMNIFY OWNER FROM ANY SUCH CLAIMS, PENALTIES, SUITS OR ACTIONS, PUBLIC OR PRIVATE, ADMINISTRATIVE OR JUDICIAL, INCLUDING ATTORNEY'S FEES PAID OR INCURRED BY OR ON BEHALF OF OWNER, JOINTLY OR SEVERALLY, AND/OR THEIR AGENTS AND EMPLOYEES. THE CONTRACTOR FURTHER AGREES, IN THE EVENT OF A CLAIMED VIOLATION OF ANY FEDERAL OR STATE SAFETY AND HEALTH LAW OR REGULATION ARISING OUT OF OR IN ANY WAY CONNECTED WITH THE PERFORMANCE OF WORK OR WORK TO BE PERFORMED UNDER THIS CONTRACT, OWNER MAY IMMEDIATELY TAKE WHATEVER ACTION IS DEEMED NECESSARY BY OWNER TO REMEDY THE CLAIMED VIOLATION. ANY AND ALL COSTS OR EXPENSES PAID OR INCURRED BY OWNER IN TAKING SUCH ACTION SHALL BE BORNE BY CONTRACTOR, AND CONTRACTOR AGREES TO PROTECT, HOLD HARMLESS AND INDEMNIFY OWNER AGAINST ANY AND ALL SUCH COSTS OR EXPENSES.
19. THE CONTRACTOR SHALL TAKE ALL REASONABLE PRECAUTIONS FOR THE SAFETY OF, AND SHALL PROVIDE ALL REASONABLE PROTECTION TO PREVENT DAMAGE, INJURY OR LOSS TO:

    A. ALL EMPLOYEES ON THE WORK SITE AND ALL OTHER PERSONS WHO MAY BE AFFECTED THEREBY;

    B. ALL THE WORK AND ALL MATERIALS AND EQUIPMENT TO BE INCORPORATED THEREIN, WHETHER IN STORAGE ON OR OFF THE SITE, UNDER THE CARE, CUSTODY OR CONTROL OF THE CONTRACTOR OR ANY OF ITS SUBCONTRACTORS; AND

    C. OTHER PROPERTY AT THE SITE OR ADJACENT THERETO, INCLUDING TREES, SHRUBS, LAWNS WALKS, PAVEMENTS, ROADWAY, STRUCTURES AND UTILITIES NOT DESIGNATED FOR DEMOLITION IN THE COURSE OF CONSTRUCTION.
20. THE CONTRACTOR SHALL COMPLY WITH ALL APPLICABLE SAFETY CODES AND WITH ALL APPLICABLE LAWS, ORDINANCES, RULES, REGULATIONS AND LAWFUL ORDERS OF ANY PUBLIC, QUASI PUBLIC OR OTHER AUTHORITY HAVING JURISDICTION FOR THE SAFETY OF PERSONS OR PROPERTY OR FOR THEIR PROTECTION AGAINST DAMAGE, INJURY OR LOSS, OR DESIGNED TO PROTECT THE ENVIRONMENT. THE CONTRACTOR SHALL ERECT AND MAINTAIN, AS REQUIRED BY EXISTING CONDITIONS AND PROGRESS OF THE WORK, ALL REASONABLE SAFEGUARDS FOR SAFETY AND PROTECTION, INCLUDING POSTING DANGER SIGNS AND OTHER WARNINGS AGAINST HAZARDS, PROMULGATING SAFETY REGULATIONS AND NOTIFYING OWNERS AND USERS OF ADJACENT UTILITIES OF THE EXISTENCE OF HAZARDS AND OF THE SAFETY REGULATIONS.
21. ALL DAMAGE OR LOSS TO ANY PROPERTY REFERRED TO IN HEREIN CAUSED IN WHOLE OR IN PART BY THE CONTRACTOR, A SUBCONTRACTOR, OR BY ANYONE FOR WHOSE ACTS ANY OF THEM MAY BE LIABLE, SHALL BE REMEDIED BY THE CONTRACTOR, EXCEPT DAMAGE OR LOSS PROPERLY ATTRIBUTABLE SOLELY TO THE ACTS OR OMISSIONS OF THE OWNER, OR THE ENGINEER OR ANYONE EMPLOYED BY THEM, OR FOR WHOSE ACTS ANY OF THEM MAY BE LIABLE, AND NOT PROPERLY ATTRIBUTABLE IN WHOLE OR IN PART, TO THE FAULT OR NEGLIGENCE OF THE CONTRACTOR.
22. UNTIL FINAL ACCEPTANCE OF THE WORK BY OWNER, THE CONTRACTOR SHALL HAVE THE CHARGE AND CARE OF AND SHALL BEAR THE RISK OF INJURY OR DAMAGE, LOSS OR EXPENSE TO ANY PART THEREOF, OR TO ANY MATERIALS STORED ON SITE, BY THE ACTION OF THE ELEMENTS OR FROM ANY OTHER CAUSE WHETHER ARISING FROM THE EXECUTION OR NON-EXECUTION OF THE WORK. THE CONTRACTOR SHALL REBUILD, REPAIR, RESTORE AND MAKE GOOD ALL INJURIES OR DAMAGES TO ANY PORTION OF THE WORK OCCASIONED BY ANY OF THE ABOVE CAUSES BEFORE FINAL ACCEPTANCE AND SHALL BEAR THE EXPENSES THEREOF.
23. THE CONTRACTOR SHALL BE RESPONSIBLE FOR MEETING ALL INSPECTION CRITERIA AND SCHEDULES, AND SIGNING FOR SAID INSPECTIONS.
24. THE CONTRACTOR SHALL CONTROL AND BE RESPONSIBLE FOR THEIR OPERATIONS AND THOSE OF THEIR SUBCONTRACTORS AND ALL SUPPLIERS, TO ASSURE THE LEAST INCONVENIENCE TO THE PUBLIC. THE CONTRACTOR SHALL MAINTAIN FREE AND UNOBSTRUCTED MOVEMENT OF VEHICULAR TRAFFIC AND SHALL LIMIT THEIR OPERATIONS IN RELATION TO THE SAFETY AND CONVENIENCE OF THE TRAVELING PUBLIC. UNDER ALL CIRCUMSTANCES, SAFETY SHALL BE THE MOST IMPORTANT CONSIDERATION.
25. THE CONTRACTOR SHALL FAMILIARIZE HIMSELF WITH THE POLICIES AND GUIDELINES ESTABLISHED BY ALL AGENCIES HAVING JURISDICTION FOR THE PRESERVATION OF ALL PUBLIC AND PRIVATE PROPERTY. THE CONTRACTOR SHALL BE RESPONSIBLE FOR ALL DAMAGE OR INJURY TO PROPERTY OF ANY CHARACTER, DURING THE EXECUTION OF THE WORK, RESULTING FROM ANY ACT, OMISSION, NEGLECT, OR MISCONDUCT IN THEIR MANNER OR METHOD OF EXECUTING THE WORK, OR AT ANYTIME DUE TO DEFECTIVE WORK OR MATERIALS.
26. THE CONTRACTOR SHALL NOT EXCAVATE, REMOVE, OR OTHERWISE DISTURB ANY MATERIAL, STRUCTURE OR PART OF A STRUCTURE WHICH IS LOCATED OUTSIDE THE LINES, GRADES OR GRADING SECTIONS ESTABLISHED FOR THIS PROJECT, EXCEPT WHERE SUCH EXCAVATION OR REMOVAL IS PROVIDED FOR IN THE CONTRACT, PLANS OR SPECIFICATIONS.
27. THE CONTRACTOR SHOULD VERIFY THE QUANTITIES AND LENGTHS OF MATERIALS SHOWN ON THE PLANS. ANY DISCREPANCY BETWEEN MATERIAL CALLOUTS AND ACTUAL SHOWN IN PLAN VIEW IS TO BE BROUGHT TO THE ENGINEER'S ATTENTION BY THE CONTRACTOR PRIOR TO BIDDING. IT IS THE ENGINEER'S INTENTION TO CONSTRUCT WHAT IS SHOWN ON THE PLANS.
28. ANY DISCREPANCY BETWEEN THE DIMENSIONS AND MEASUREMENTS SHOWN ON THE PLANS AND THE ACTUAL FIELD CONDITIONS SHALL IMMEDIATELY BE BROUGHT TO THE ENGINEER'S ATTENTION. FAILURE TO DO SO AND TO CONTINUE CONSTRUCTION SHALL MAKE THE CONTRACTOR RESPONSIBLE FOR ALL ERRORS AND NECESSARY CORRECTIONS THAT MAY SUBSEQUENTLY ARISE.
29. CONTRACTOR SHALL LIMIT NOISE MEASURED FROM THE PROPERTY LINE OF THE CLOSEST COMPLETED HOME TO 60 DB FROM 7 AM TO 10 PM AND TO 50 DB FROM 10 PM TO 7 AM. CITY MANAGER PERMISSION IS REQUIRED FOR POTENTIALLY NOISY CONSTRUCTION OPERATIONS IN THE 10 PM TO 7 AM PERIOD. [CODE OF ORDINANCES SECTION 42-80, TABLE 1]

EROSION CONTROL

1. THE CONTRACTOR SHALL COMPLY WITH ALL FEDERAL, STATE AND LOCAL LAWS AND ALL REGULATIONS CONTROLLING POLLUTION OF THE ENVIRONMENT.
2. THE CONTRACTOR SHALL DEVELOP AND IMPLEMENT A STORMWATER POLLUTION PREVENTION PLAN (SWPPP) ACCORDING TO EPA/FDEP NPDES CRITERIA TO MINIMIZE EROSION AND INSURE PROPER FUNCTIONING OF STORM WATER MANAGEMENT SYSTEM UPON COMPLETION OF CONSTRUCTION. IN ADDITION TO MEETING EPA/FDEP NPDES CRITERIA, THE SWPPP SHALL BE SUBMITTED TO AND COMPLY WITH LOCAL AGENCY HAVING JURISDICTION'S MINIMUM EROSION CONTROL CRITERIA.
3. CONTRACTOR SHALL EXECUTE ALL MEASURES NECESSARY TO LIMIT THE TRANSPORTATION OF SEDIMENTS OUTSIDE THE LIMITS OF THE PROJECT TO THE VOLUME AND AMOUNT AS THOSE THAT EXIST PRIOR TO COMMENCEMENT OF CONSTRUCTION. THIS CONDITION MUST BE SATISFIED UNTIL PROJECT IS FULLY COMPLETED AND ACCEPTED. CONTRACTOR SHALL PROVIDE ROUTINE MAINTENANCE ON TEMPORARY EROSION CONTROL FEATURES AT HIS EXPENSE. PROVISION MUST BE MADE TO PRESERVE THE INTEGRITY AND CAPACITY OF CHECK WEIRS, SEDIMENT BASINS, SLOPE DRAINS, GRADING PATTERNS, ETC. REQUIRED TO MEET THIS PROVISION THROUGH OUT THE LIFE OF CONSTRUCTION. CONTRACTOR SHALL PROVIDE SILT BARRIERS, MURAFI FILTERS, TEMPORARY GRASSING, ETC., AS REQUIRED TO FULLY COMPLY WITH THE INTENT OF THIS SPECIFICATION. CONTRACTOR SHALL PROVIDE CONTINUOUS MONITORING OF EROSION AND SEDIMENT CONTROLS TAKEN AND SHALL DOCUMENT ALL CORRECTIVE MEASURES. A COPY OF THE APPROVED SWPPP SHALL BE KEPT ON SITE AT ALL TIMES FOR REVIEW BY OWNER'S REPRESENTATIVE AND BY NPDES INSPECTORS. THIS PERMIT MUST BE SUBMITTED TO ORANGE COUNTY BY THE CONTRACTOR PRIOR TO THE ISSUANCE OF PERMITS.
4. THE OWNER AND/OR CONTRACTOR SHALL PROVIDE A NOTICE OF INTENT IN ACCORDANCE WITH CRITERIA SET FORTH IN THE NPDES PERMIT REQUIREMENTS 48 HOURS PRIOR TO BEGINNING CONSTRUCTION, CLEARING, OR DEMOLITION.
5. PROVIDE EFFECTIVE TEMPORARY AND PERMANENT EROSION CONTROL FOLLOWING THE REQUIREMENTS IN SECTION 104 OF THE STATE DEPT. OF TRANSPORTATION STANDARDS SPECIFICATIONS FOR ROAD AND BRIDGE CONSTRUCTION, LATEST EDITION. (F.D.O.T. SECTION 104)
6. INLETS AND CATCH BASINS SHALL BE PROTECTED FROM SEDIMENTATION RESULTING FROM SURFACE RUNOFF UNTIL COMPLETION OF ALL CONSTRUCTION OPERATION THAT MAY CAUSE SEDIMENT RUNOFF. FILTER FABRIC SHALL BE PLACED AND MAINTAINED UNDER THE GRATE AND FILTER SOCKS PLACED IN FRONT OF THE THROAT OF CURB INLETS, DURING CONSTRUCTION.
7. TURBIDITY BARRIERS MUST BE INSTALLED AT ALL LOCATIONS WHERE THE POSSIBILITY OF TRANSFERRING SEDIMENTS AND SUSPENDED SOLIDS INTO THE RECEIVING WATER BODY EXISTS DUE TO CONSTRUCTION. TURBIDITY BARRIERS SHALL REMAIN IN PLACE UNTIL CONSTRUCTION IS COMPLETED, SOILS ARE STABILIZED AND VEGETATION HAS BEEN ESTABLISHED.
8. ALL SLOPES 5:1 OR GREATER SHALL BE SODDED. ALL POND SLOPES AND RIGHTS-OF-WAY SHALL BE SODDED.
9. IN ACCORDANCE WITH FDEP AND WATER MANAGEMENT DISTRICT PERMITS, ALL DISTURBED AREAS SHALL BE SEEDED AND MULCHED WITHIN 7 DAYS OF NO CONSTRUCTION ACTIVITES.

DEMOLITION AND CLEARING

1. PRIOR TO CONSTRUCTION, THE CONTRACTOR SHALL CLEARLY DESIGNATE THE LIMITS OF CONSTRUCTION ON-SITE. THE CONTRACTOR SHALL NOT PERFORM ANY WORK OUTSIDE THE LIMITS OF CONSTRUCTION.
2. THE CONTRACTOR SHALL BE EXTREMELY CAUTIOUS WHEN WORKING NEAR TREES THAT ARE TO BE SAVED, WHETHER SHOWN IN THE PLANS OR DESIGNATED IN THE FIELD.
3. ALL PRACTICAL AND NECESSARY EFFORT SHALL BE TAKEN DURING CONSTRUCTION TO PREVENT UNNECESSARY TREE REMOVAL.
4. ANY PROPOSED CUT OR FILL MATERIAL TO BE REMOVED OR PLACED WITHIN THE DRIP LINE OF SPECIMEN TREES TO REMAIN, INCLUDING TRENCHING FOR PROPOSED IMPROVEMENTS SUCH AS UTILITIES, WILL REQUIRE THE ADVANCED PRE-TREATMENT OF EACH IMPACTED TREE BY A QUALIFIED ARBORIST OR AT THE DIRECTION OF THE LANDSCAPE ARCHITECT TO MINIMIZE THE POTENTIALLY ADVERSE IMPACTS OF CONSTRUCTION.
5. TREE PROTECTION BARRICADES OR EQUIVALENT PROTECTIVE MEASURES WILL BE CONSTRUCTED ACCORDING TO THE LOCAL JURISDICTION'S CRITERIA FOR TREES TO REMAIN WITHIN THE LIMITS OF CONSTRUCTION.
6. IN AREAS REQUIRING FILL MATERIAL, THE CONTRACTOR SHALL STRIP OR OTHERWISE REMOVE ALL VEGETATION SUCH AS BRUSH, HEAVY SODS, HEAVY GROWTH OF GRASS, DECAYED VEGETATION MATTER, RUBBISH AND ANY OTHER DELETERIOUS MATERIAL BEFORE EMBANKMENT IS PLACED. IMMEDIATELY PRIOR TO THE PLACING OF FILL MATERIAL, THE ENTIRE AREA UPON WHICH FILL IS TO BE PLACED, SHALL BE SCARIFIED IN A DIRECTION APPROXIMATELY PARALLEL TO THE AXIS OF FILL. THE GEOTECHNICAL ENGINEER SHALL APPROVE THE AREA PRIOR TO THE PLACEMENT OF FILL.

PAVING, GRADING & DRAINAGE

1. THE CONTRACTOR SHALL PERFORM ALL WORK PERTAINING TO DRAINAGE INCLUDING EXCAVATION OF STORMWATER MANAGEMENT PONDS OR EQUIVALENT FACILITIES PRIOR TO THE COMMENCEMENT OF OTHER WORK INCLUDED IN THESE PLANS.
2. THE CONTRACTOR SHALL STAKE ALL IMPROVEMENTS USING THE RECORD PLAT. THE CONTRACTOR SHALL VERIFY WITH THE ENGINEER THAT THE PLAT IS CORRECT PRIOR TO ANY CONSTRUCTION. IF A PLAT DOES NOT EXIST, CONTRACTOR IS TO VERIFY USE OF THE SURVEY FOR LAYOUT WITH ENGINEER PRIOR TO STARTING WORK. IT IS THE CONTRACTOR'S RESPONSIBILITY TO COMPLETELY STAKE AND CHECK ALL IMPROVEMENTS TO INSURE CORRECT POSITIONING, BOTH HORIZONTAL AND VERTICAL, INCLUDING MINIMUM BUILDING SETBACKS PRIOR TO THE INSTALLATION OF ANY IMPROVEMENT. ANY DISCREPANCY BETWEEN PLATTED INFORMATION AND THE PLANS SHALL BE REPORTED TO THE ENGINEER IMMEDIATELY AND IN WRITING.
3. PRIOR TO INITIATING ANY EXCAVATION (INCLUDING BUT NOT LIMITED TO TUNNELS, DITCHES, STORM WATER PONDS, CANALS, ARTIFICIAL LAKES) CONTRACTOR SHALL INSTALL SAFETY FENCING AND TAKE ALL OTHER REASONABLE AND PRUDENT STEPS TO INSURE THAT ACCESS TO EXCAVATION BY UNAUTHORIZED PERSONNEL IS PREVENTED. ANY PERMANENT FENCING WILL REQUIRE A SEPARATE BUILDING PERMIT.
4. ALL DRAINAGE STRUCTURES ARE TO BE TRAFFIC BEARING UNLESS OTHERWISE NOTED. ALL PRECAST CIRCULAR STRUCTURES SHALL BE CONSTRUCTED WITH A MINIMUM WALL THICKNESS IN ACCORDANCE WITH ASTM C478 & FDOT STANDARD INDEX 200, SHEET 2, TABLE 1.
5. ALL PROPOSED PAVING SURFACES IN INTERSECTIONS AND ADJACENT EXISTING SECTIONS SHALL BE GRADED TO DRAIN POSITIVELY IN THE DIRECTION SHOWN BY THE PROPOSED GRADES AND FLOW ARROWS ON THE PLANS AND TO PROVIDE A SMOOTHLY TRANSITIONED DRIVING SURFACE FOR VEHICLES WITH NO SHARP BREAKS IN GRADE, AND NO UNUSUALLY STEEP OR REVERSE CROSS SLOPES. APPROACHES TO INTERSECTIONS AND ENTRANCE AND EXIT GRADES TO INTERSECTIONS MAY REQUIRE MINOR LOCAL FIELD ADJUSTMENTS SHOULD ACTUAL CONDITIONS VARY FROM THE SURVEYED INFORMATION THE DESIGN WAS BASED UPON IN ORDER TO ACCOMPLISH THE INTENT OF THE PLANS. IN ADDITION, THE STANDARD CROWN WILL HAVE TO BE CHANGED IN ORDER TO DRAIN POSITIVELY IN THE AREA OF INTERSECTIONS. IT IS THE CONTRACTOR'S RESPONSIBILITY TO ACCOMPLISH THE ABOVE AND CONSULT THE ENGINEER AS NEEDED TO MAKE ANY AND ALL REQUIRED INTERPRETATIONS OF THE PLANS OR GIVE SUPPLEMENTARY INSTRUCTIONS SHOULD THE INTENT OF THE PLANS BE UNCLEAR.
6. CONSTRUCTION OF ROADWAYS SHALL MEET THE MINIMUM STANDARDS AND SPECIFICATIONS OF THE LOCAL AGENCY(S) HAVING JURISDICTION AND THE MINIMUM SUGGESTED SECTIONS AS OUTLINED IN THE SOILS REPORT'S RECOMMENDATIONS, UNLESS OTHERWISE NOTED.
7. THE CONTRACTOR IS RESPONSIBLE FOR REMOVING ANY EXCESS CUTS OR SUPPLYING FILL AS NECESSARY TO GRADE THE SITE TO THE PROPOSED ELEVATIONS AS DESIGNED WITHIN THE CONSTRUCTION DOCUMENTS.
8. IF LIMESTONE BEDROCK IS ENCOUNTERED DURING EXCAVATION OF THE RETENTION BASINS OR A SINKHOLE OR SOLUTION CAVITY FORMS DURING CONSTRUCTION, EXCAVATION OF THE BASIN MUST BE HALTED IMMEDIATELY, THE OWNER, ENGINEER, AND WATER MANAGEMENT DISTRICT MUST BE NOTIFIED, AND REMEDIAL ACTION WILL BE REQUIRED. THE PERMITEE MUST INSPECT ALL PERMITTED SURFACE WATER MANAGEMENT BASINS MONTHLY FOR THE OCCURRENCE OF SINKHOLES AND DOCUMENT THESE INSPECTIONS ON WATER MANAGEMENT DISTRICT CONDITION COMPLIANCE FORM NUMBER EN-33. TWO COPIES OF THE COMPLETED FORMS MUST BE SENT TO THE WATER MANAGEMENT DISTRICT AND THE LOCAL AGENCY HAVING JURISDICTION ANNUALLY BY MAY 31ST. OF EACH YEAR. THE PERMITEE MUST REPORT ANY SINKHOLE THAT DEVELOPS WITHIN THE SURFACE WATER MANAGEMENT SYSTEM. THE PERMITEE MUST NOTIFY THE WATER MANAGEMENT DISTRICT AND LOCAL AGENCY HAVING JURISDICTION OF ANY SINKHOLE DEVELOPMENT IN THE SURFACE WATER MANAGEMENT SYSTEM WITHIN 48 HOURS OF ITS DISCOVERY AND COMPLETE SINKHOLE REPAIR WITHIN 10 DAYS OF SUCH DISCOVERY USING A DISTRICT APPROVED METHODOLOGY.
9. AFTER THE ROADWAY HAS BEEN CONSTRUCTED TO SUBGRADE, IT SHALL BE PROOF-ROLLED TO ASSURE THAT PROPER COMPACTION HAS BEEN ATTAINED. THE PROOF-ROLLING AND COMPACTION OPERATIONS SHALL BE INSPECTED AND TESTED BY A FLORIDA LICENSED GEOTECHNICAL ENGINEER TO ASSURE THAT THE SPECIFIED COMPACTION IS MAINTAINED AND ALL DELETERIOUS MATERIALS HAVE BEEN REMOVED.
10. THE CONTRACTOR SHALL INSURE THAT A MINIMUM SOIL DENSITY OF 98% COMPACTION (AASHTO T-99 STANDARD PROCTOR METHOD) IS ACHIEVED UNLESS OTHERWISE NOTED FOR PLACEMENT OF ALL HEADWALL/ENDWALL FOOTINGS, RETAINING WALL FOOTINGS, AND IN GENERAL, ANY FOOTING SUPPORT DESCRIBED ON THESE PLANS. IT WILL ALSO BE THE RESPONSIBILITY OF THE CONTRACTOR TO INSURE THAT SUFFICIENT GEOTECHNICAL TESTING AND DESIGN HAS BEEN PERFORMED PRIOR TO CONSTRUCTION.
11. BLUE REFLECTIVE PAVEMENT MARKERS SHALL BE PLACED IN THE CENTER OF THE DRIVING LANE OPPOSITE EACH FIRE HYDRANT.
12. STORM PIPE LENGTHS SHOWN ON THE PLANS INCLUDE MITERED END SECTIONS. IF THE CONTRACTOR ELECTS TO USE AN APPROVED ALTERNATE, THE PIPE LENGTHS MUST BE ADJUSTED.
13. INLET OFFSETS ARE TO THE CENTERLINES SHOWN ON F.D.O.T. DESIGN STANDARDS INDEXES.
14. THE CONTRACTOR IS RESPONSIBLE FOR PAVING ALL ROADWAYS TO DRAIN POSITIVELY. INTERSECTIONS SHALL BE TRANSITIONED TO PROVIDE A SMOOTH DRIVING SURFACE WHILE MAINTAINING POSITIVE DRAINAGE. IF AN AREA OF POOR DRAINAGE IS OBSERVED, THE CONTRACTOR SHALL NOTIFY THE ENGINEER PRIOR TO PAVING SO THAT A SOLUTION OR RECOMMENDATION FOR CORRECTION MAY BE MADE.
15. ALL REINFORCED CONCRETE PIPE (R.C.P.) SHALL BE MINIMUM CLASS III , UNLESS OTHERWISE APPROVED OR NOTED ON THE PLANS OR SPECIFICATIONS.
16. ALL STORMWATER PIPE JOINTS SHALL BE WRAPPED WITH FILTER FABRIC.

PUBLIC RIGHTS-OF-WAY

1. THE CONTRACTOR SHALL COORDINATE ALL WORK WITHIN PUBLIC RIGHTS-OF-WAY WITH THE RESPECTIVE LOCAL AGENCY(S) HAVING JURISDICTION (CITY OR COUNTY) DIRECTOR OF PUBLIC WORKS AND THE JURISDICTION'S ENGINEER. IN ADDITION, ANY WORK WITHIN A STATE ROAD RIGHT-OF-WAY MUST BE APPROVED AND COORDINATED WITH THE FDOT THROUGH THE LOCAL MAINTENANCE OFFICE FOR EACH DISTRICT.
2. PRIOR TO PERFORMING ANY WORK WITHIN ANY PUBLIC OR UTILITY RIGHT-OF-WAY, CONTRACTOR SHALL OBTAIN AUTHORIZATION AND PERMIT FROM ALL JURISDICTIONS RESPONSIBLE FOR SUCH RIGHT-OF-WAY.
3. PRIOR TO PERFORMING ANY WORK WITHIN ANY PUBLIC RIGHT-OF-WAY, CONTRACTOR SHALL DEVELOP AND SUBMIT A MAINTENANCE OF TRAFFIC PLAN TO THE LOCAL AGENCY HAVING JURISDICTION OVER SAID ROW FOR THEIR APPROVAL. THIS PLAN MUST MEET THE MINIMUM REQUIREMENTS AS OUTLINED IN THE "MANUAL ON UNIFORM TRAFFIC CONTROL DEVICES" PUBLISHED BY THE U.S. DEPARTMENT OF TRANSPORTATION, FEDERAL HIGHWAY ADMINISTRATION AND THE FLORIDA DEPARTMENT OF TRANSPORTATION DESIGN STANDARDS.

UTILITIES

UTILITY PROVIDERS:
WATER: ------------------------- PORT ORANGE PUBLIC UTILITIES DEPARTMENT - (386) 506-5750
RECLAIMED WATER: ------- PORT ORANGE PUBLIC UTILITIES DEPARTMENT - (386) 506-5750
SANITARY SEWER: ---------- PORT ORANGE PUBLIC UTILITIES DEPARTMENT - (386) 506-5750
SOLID WASTE: --------------- WASTE PRO - (386) 506-5575
ELECTRIC: --------------------- FLORIDA POWER & LIGHT - (386) 322-3420
TELEPHONE: ----------------- AT&T - (800) 222-0300
CABLE: -------------------------- BRIGHT HOUSE NETWORKS - (386) 760-9950
GAS: ----------------------------- TECO PEOPLES GAS - 1-877-832-6747
& FLORIDA PUBLIC UTILITIES - (386) 668-9338

1. THE EXISTING UTILITIES SHOWN ARE APPROXIMATE. THE CONTRACTOR SHALL FIELD LOCATE ALL EXISTING UTILITIES AS TO SIZE, LOCATION, AND ELEVATION. THE CONTRACTOR SHALL NOTIFY THE ENGINEER OF ANY AND ALL CONFLICTS PRIOR TO BEGINNING CONSTRUCTION.
2. THE CONTRACTOR SHALL BE RESPONSIBLE FOR LOCATING AND VERIFYING SIZE, TYPE, LOCATION, AND ELEVATION OF ALL EXISTING UTILITIES PRIOR TO CONSTRUCTION AND NOTIFYING THE INVOLVED UTILITY PROVIDERS TO MAKE ANY NECESSARY ARRANGEMENTS FOR RELOCATION, DISRUPTION OF SERVICE, OR CLARIFICATION OF ACTIVITY REGARDING SAID UTILITY. THE CONTRACTOR SHALL USE EXTREME CAUTION WHEN CROSSING AN UNDERGROUND UTILITY, WHETHER SHOWN ON THESE PLANS OR FIELD LOCATED. THE RESPECTIVE UTILITY PROVIDERS SHALL RELOCATE UTILITIES THAT INTERFERE WITH THE PROPOSED CONSTRUCTION AND THE CONTRACTOR SHALL COOPERATE WITH THE UTILITY PROVIDERS DURING RELOCATION OPERATIONS. ANY DELAY OR INCONVENIENCE CAUSED BY THE INVOLVED UTILITIES SHALL BE INCIDENTAL TO THE CONTRACT. THE CONTRACTOR SHALL CONFORM TO FLORIDA STATUTE CHAPTER 556 AND THE SUNSHINE STATE ONE-CALL OF FLORIDA.
3. CONTRACTOR SHALL NOTIFY ALL UTILITY OWNERS AND THE SUNSHINE UNDERGROUND UTILITIES NOTIFICATION CENTER AT 1-800-432-4770 AT LEAST 72 HOURS PRIOR TO START OF WORK. CONTRACTOR IS RESPONSIBLE FOR CONTINUAL MAINTENANCE OF ALL UTILITY LOCATES, FLAGS, MARKING, ET CETERA THROUGH THE ENTIRE DURATION OF CONSTRUCTION.
4. UTILITY SERVICES TO THE PROPOSED BUILDING(S) SHALL TERMINATE 5 FEET OUTSIDE OF THE BUILDING UNLESS OTHERWISE NOTED. PRIOR TO CONSTRUCTION, THE CONTRACTOR SHALL REVIEW BUILDING ARCHITECTURAL AND PLUMBING PLANS TO VERIFY PROPER CONTINUATION OF THE PROPOSED UTILITIES FOR LOCATION, ALIGNMENT AND ELEVATION(S) FOR EACH SERVICE TO THE BUILDING(S). SHOULD UTILITY SERVICE LATERALS SHOWN ON THE SITE CIVIL CONSTRUCTION PLANS NOT CORRESPOND WITH BUILDING ARCHITECTURAL OR PLUMBING PLANS THE CONTRACTOR SHALL NOTIFY THE ENGINEER IMMEDIATELY.
5. THE POWER DISTRIBUTION SYSTEM SHALL BE DESIGNED AND INSTALLED BY THE POWER SERVICE PROVIDER. THE CONTRACTOR SHALL COORDINATE WITH SAID POWER SERVICE PROVIDER TO INSURE PROPER CONSTRUCTION PHASING IS ACHIEVED, AND TO ALLOW THE INSTALLATION OF STREET CROSSINGS, SLEEVES, CONDUITS, POLES, TRANSFORMERS, AND OTHER REQUIRED EQUIPMENT. IT IS THE OWNER'S RESPONSIBILITY TO ACQUIRE ANY NECESSARY EASEMENTS AS A RESULT OF THE POWER SERVICE PROVIDER'S DESIGN AND RESPECTIVE INSTALLATION LOCATIONS.
6. THE TELEPHONE, CABLE TV, DATA, AND/OR COMMUNICATION SYSTEMS SHALL BE DESIGNED AND INSTALLED BY THEIR RESPECTIVE SERVICE PROVIDER. THE CONTRACTOR SHALL COORDINATE WITH SAID SERVICE PROVIDER TO INSURE PROPER CONSTRUCTION PHASING IS ACHIEVED, CONFLICT FREE, AND TO ALLOW THE INSTALLATION OF STREET CROSSINGS, SLEEVES, CONDUITS, POLES, AND OTHER REQUIRED EQUIPMENT. IT IS THE OWNER'S RESPONSIBILITY TO ACQUIRE ANY NECESSARY EASEMENTS AS A RESULT OF THE SERVICE PROVIDERS' DESIGNS AND RESPECTIVE INSTALLATION LOCATIONS.
7. IT IS THE CONTRACTOR'S RESPONSIBILITY TO PROPERLY COORDINATE THE FINAL DESIGNS AND SUBSEQUENT INSTALLATIONS OF ALL SERVICE PROVIDERS' UTILITIES AND THEIR MINIMUM CRITERIA AS SET FORTH THEREIN FOR ITEMS SUCH AS MAINTAINING THE MINIMUM SEPARATION DISTANCES BETWEEN THE VARIOUS UTILITIES.
8. UNLESS OTHERWISE NOTED, THE TOP 24 INCHES OF ALL UTILITY TRENCHES WITHIN ROADWAYS IN MAXIMUM 12" LIFTS, SHALL BE COMPACTED TO 98% OF THE MODIFIED PROCTOR MAXIMUM DENSITY; ALL OTHER UTILITY TRENCHES SHALL BE COMPACTED TO 95% OF THE MODIFIED PROCTOR MAXIMUM DENSITY.
9. THE CONTRACTOR SHALL NOTIFY THE APPLICABLE UTILITIES CONSTRUCTION DEPARTMENT FOR THE CORRESPONDING LOCAL UTILITY PROVIDED A MINIMUM OF 48 HOURS PRIOR TO STARTING ANY UTILITIES CONSTRUCTION.
10. PIPE ALIGNMENT, DEFLECTION, AND INTEGRITY TESTING SHALL BE PERFORMED BY THE 'LAMPING' METHOD AND UTILIZING VIDEO INSPECTION. THE CONTRACTOR SHALL PERFORM INTERNAL VIDEO INSPECTION FOR THE GRAVITY SEWER TO CHECK PIPE ALIGNMENT AND DEFLECTION.
11. ALL FIRE HYDRANTS AND APPARATUS MUST COMPLY WITH FFPC SECTION 3-5.6 AND SECTION 3-7.1 WHEN APPLICABLE.
12. MAXIMUM SPACING OF FIRE HYDRANTS IS 500' IN ACCORDANCE WITH CITY CODE 24.30 (F)(L).
13. UNDERGROUND MAIN CONTRACTOR MUST APPLY FOR A FIRE PERMIT FOR THE INSTALLATION OR MODIFICATION OF ANY UNDERGROUND MAINS SERVING FIRE HYDRANTS AND/OR FIRE PROTECTION SYSTEMS PRIOR TO ANY INSTALLATION. IF THE WATER DISTRIBUTION SYSTEM AND FIRE HYDRANTS ARE LOCATED IN A RIGHT-OF-WAY OR RECORDED EASEMENT AND OWNED/INSTALLED/MAINTAINED BY THE WATER PURVEYOR, WE WILL ONLY REQUIRE INSTALLATION TO THE WATER PURVEYOR'S STANDARDS FOR UNDERGROUND COMPONENTS AND CONNECTIONS. HOWEVER, HYDRANTS MUST BE IN COMPLIANCE WITH HYDRANT SPACING, LOCATION, DISTRIBUTION, COLOR CODING, AND NEEDED FIRE FLOW MINIMUS AS SPECIFIED IN CITY FIRE CODE, UNDERGROUND MAIN AND FIRE HYDRANT INSTALLATIONS ON PRIVATE PROPERTY WILL REQUIRE AN FIR PERMIT AND FULL COMPLIANCE WITH NFPA 24. [CITY FIRE CODE, SECTION 24.13(T)(13)].

Dewberry®

Dewberry Engineers Inc.
800 NORTH MAGNOLIA AVE
ORLANDO, FL 32803
SUITE 1000
PHONE: 407.843.5120
ENGINEERING BUSINESS -8794

WESTPORT RESERVE (PHASE 2B)

PORT ORANGE, FL

SEAL

Danielle Van De Loo
FL PE # 74676
7/1/2016

No.	DATE	BY	Description

REVISIONS

DRAWN BY TFS
APPROVED BY DMV
CHECKED BY NPS
DATE JANUARY 2016
DATUM NAVD 88

TITLE

GENERAL NOTES

PROJECT NO. 50079046 (CC 1)

C02

SHEET NO.

3:47:22 PM ...\CC1-SF PH1 GenNotes-01.dgn

POTABLE WATER

1. ALL PVC WATERMAINS 2" OR LESS SHALL BE SDR21 (200 PSI) UNLESS OTHERWISE NOTED.

2. WATER MAINS SHALL COMPLY WITH AWWA STANDARDS. ALL PVC PIPE 3 TO 12 INCHES SHALL BE AWWA C900 DR18; ALL PVC PIPE 14 INCHES AND LARGER SHALL COMPLY WITH AWWA C905 DR25. ALL WATER MAINS SHALL BEAR THE NSF LOGO AND SHALL BE COLOR-CODED OR MARKED USING BLUE AS A PREDOMINANT COLOR TO DIFFERENTIATE DRINKING WATER FROM OTHER WATER LINES.

3. WHERE DUCTILE IRON PIPE IS REQUIRED FOR WATER MAINS, IT SHALL CONFORM TO ANSI/AWWA A21.51. A MINIMUM THICKNESS FOR PRESSURE CLASS 350 PER ANSI/AWWA SHALL BE SUPPLIED. DIP SIZES UP TO 12 INCHES IN DIAMETER SHALL BE PRESSURE CLASS 350. DIP SIZES 14 INCHES AND LARGER SHALL BE PRESSURE CLASS 250.

4. ALL WATER MAIN FITTINGS, VALVES, RESTRAINTS, COUPLINGS, PIPE, AND IN GENERAL, THOSE MATERIALS REQUIRED FOR INSTALLING THE WATER SUPPLY SYSTEM, SHALL COMPLY WITH THE MINIMUM MATERIAL STANDARDS, RATINGS AND CLASSIFICATIONS ESTABLISHED BY THE RESPECTIVE UTILITY PROVIDER. ALL WATER MAIN FITTINGS SHALL BE DIP FOR ALL 3" THRU 12" PVC AND DIP WATER MAINS CONFORMING TO THE REQUIREMENTS OF ANSI/AWWA C153/A21.53 AND EPOXY COATED EXTERIOR, UNLESS NOTED OTHERWISE. .THESE FITTINGS SHALL INCORPORATE RESTRAINING RINGS, MEGA-LUGS OR OTHER APPROVED EQUIVALENT MECHANICAL DEVICES.

5. DUCTILE IRON PIPE AND FITTINGS SHALL HAVE A CEMENT MORTAR INTERIOR LINING CONFORMING TO THE REQUIREMENTS OF ANSI/AWWA C104/A21.4.

6. VALVES FOR POTABLE AND RAW WATER MAINS SHALL BE DUCTILE IRON (D.I.) EPOXY COATED GATE VALVES OR BUTTERFLY VALVES. SEE SPECIFICATIONS FOR DETAILS.

7. ALL POLYETHYLENE PRESSURE PIPE AND FITTINGS 4-INCH AND LARGER SHALL CONFORM TO AWWA STANDARD C906-99 (DR11) PRESSURE CLASS 160 AND ASTM STANDARD D3350, D2837 PE 3408.

8. ALL POLYETHYLENE PIPES FOR SERVICE TUBING SHALL CONFORM TO AWWA STANDARD C901 (DR9) PRESSURE CLASS 200 AND STANDARD D2737 PE 3408.

9. ALL PIPE AND POLYETHYLENE SERVICE TUBING SHALL BEAR THE NATIONAL SANITATION FOUNDATION (NSF) SEAL OF APPROVAL FOR POTABLE WATER SERVICE.

10. PVC PIPE LESS THAN 2-INCHES SHALL CONFORM TO ASTM D1785. THREADED PIPE AND FITTINGS SHALL BE SCH. 80 AND CONFORM TO ASTM D2464. UNTHREADED PIPE AND FITTINGS SHALL BE SCH. 40 WITH SOLVENT-CEMENTED JOINTS. CEMENTED JOINTS AND FITTINGS SHALL COMPLY WITH ASTM D2466 AND D2855.

11. 2", 2.5 " AND 3" PVC PIPE SHALL CONFORM TO ASTM D2241. PIPE SHALL BE FURNISHED IN 20-FOOT LENGTHS, SHALL HAVE DIMENSION RATIO (DR21) AND A WATER PRESSURE RATING OF 200 PSI.

12. PIPE MEASUREMENTS SHALL BE CENTER TO CENTER OF FITTINGS OR VALVES.

13. CONTRACTOR SHALL PROVIDE TEMPORARY THRUST RESTRAINTS, BRACING, TEST PLUGS AND/OR OTHER DEVICES NECESSARY TO SUCCESSFULLY COMPLETE PRESSURE TESTING OF ALL PRESSURE PIPING SYSTEMS, ANCILLARY TO THE WORK.

14. AUTOMATIC AIR RELASE/VACUUM AIR RELEASE VALVES FOR UNDERGROUND INSTILLATION SHALL CONFORM WITH 62-555.320(21)(B)FAC & RSWW 8.4.2.

15. ALL BURIED PIPING SPECIFIED FOR PRESSURE SERVICE SHALL BE PROVIDED WITH RESTRAINING DEVICES AT ALL DIRECTIONAL CHANGES, UNLESS NOTED OTHERWISE.

16. ALL FASTENERS SHALL BE MANUFACTURED OF NON-CORROSIVE MATERIALS.

17. LOCATIONS AND DIMENSIONS OF EXISTING RIGHTS-OF-WAY AND EASEMENTS ARE BASED ON THE BEST AVAILABLE INFORMATION. THE CONTRACTOR SHALL VERIFY ALL THE LIMITS OF RIGHTS-OF-WAY AND EASEMENTS IN ORDER TO AVOID ENCROACHMENTS.

18. THE CONTRACTOR SHALL REPAIR OR REPLACE WITH EQUAL MATERIALS IN KIND OR AS DIRECTED BY THE OWNER OR INSPECTOR ANY ITEMS DISTURBED OR DAMAGED BY THE UTILITY CONSTRUCTION OR ITS RELATED ACTIVITIES FOR ITEMS SUCH AS BUT NOT LIMITED TO, PAVING, STABILIZED EARTH, DRIVEWAYS, ETC.

19. CONTRACTOR SHALL PAINT THE HYDRANTS ACCORDING TO FIRE DEPARTMENT REQUIREMENTS.

20. WHERE APPLICABLE FIRE HYDRANTS SHALL BE INSTALLED WITHIN THE ROW.

21. PROPER BACKFLOW PREVENTION ASSEMBLIES SHALL BE PROVIDED IN ACCORDANCE WITH RULE 62-555.360, F.A.C. AND AWWA MANUAL M14, "RECOMMENDED PRACTICE FORBACKFLOW PREVENTION AND CROSS CONNECTION CONTROL" (LATEST EDITIONS) AS INCORPERATED IN RULE 62-555-330 FAC. THE METHOD OF CONNECTION TO THE EXISTING ACTIVE MAIN SHOULD BE CHOSEN TO ENCSURE THAT THE PRESSURE DOES NOT DROP BELOW 20PSI OTHERWISE A BOIL WATER NOTICE IS REQUIRED TO BE ISSUED BY THE UTILITY SUPPLYING THE WATER.

22. CONTRACTOR SHALL COORDINATE WITH AGENCY HAVING JURISDICTION AND WATER SERVICE PROVIDER TO HAVE WATER SAMPLES TAKEN AT LOCATIONS AS SPECIFIED BY THEIR MINIMUM STANDARDS AND AS OUTLINED IN THE FLORIDA DEPARTMENT OF ENVIRONMENTAL PROTECTION PERMIT FOR CONSTRUCTION OF THE WATER DISTRIBUTION SYSTEM (IF PERMIT IS REQUIRED). DOCUMENTATION OF THE MINIMUM TESTING RESULTS SUCH AS BACTERIOLOGICAL REPORTS WITH RESIDUAL CL LEVELS SHALL BE SUBMITTED TO THE ENGINEER WITHIN 4 DAYS FROM THE DAY OF SAMPLE. IT IS THE CONTRACTOR'S RESPONSIBILITY TO REVIEW AND VERIFY THE RESULTS AS PASSING PRIOR TO SUBMITTAL TO THE ENGINEER.

23. ALL WATER MAINS SHALL BE HYDROSTATICALLY TESTED AND DISINFECTED IN ACCORDANCE WITH AWWA STANDARDS, LATEST REVISIONS. HYDROSTATIC TESTING FOR PVC MAINS SHALL BE 150 PSI FOR MINIMUM OF 2 HOURS AND MEET AWWA STANDARD C605/M23. DUCTILE IRON MAINS SHALL BE TESTED AT 150 PSI FOR 2 HOURS PER AWWA C600. ALL NEW MAINS SHALL BE DISINFECTED PER AWWA STANDARD C651. BACTERIOLOGICAL TESTS FOR 2 CONSECUTIVE DAYS SHALL BE APPROVED PRIOR TO PLACING SYSTEM INTO SERVICE.

24. ALL WATER MAINS SHALL HAVE AN "EARLY WARNING" PROTECTION TAPE INSTALLED CONTINUOUSLY ALONG THE ENTIRE LENGTH. THE PROTECTION TAPE SHALL BE INSTALLED DURING THE BACKFILLING 6 TO 12 INCHES BELOW FINISH GRADE DIRECTLY OVER THE PIPE AND BE CONTINUOUSLY MARKED WITH "CAUTION - WATER MAIN BURIED BELOW". THE TAPE SHALL HAVE AN EMBEDDED METALLIC DETECTABLE STRIP AND BE BLUE IN COLOR FOR POTABLE WATER.

25. THE CONTRACTOR SHALL SUBMIT SHOP DRAWINGS ON ALL EQUIPMENT AND MATERIALS FOR APPROVAL TO THE ENGINEER AND WATER SERVICE PROVIDER PRIOR TO PROCUREMENT.

WATER LINE CONSTRUCTION NOTES PER FDEP

1. ALL PIPE, PIPE FITTINGS, PIPE JOINT PACKING AND JOINTING MATERIALS, VALVES, FIRE HYDRANTS, AND METERS INSTALLED WILL CONFIRM TO APPLICABLE AMERICAN WATER WORKS ASSOCIATION (AWWA) STANDARDS.

2. ALL PUBLIC WATER SYSTEM COMPONENTS, EXCLUDING FIRE HYDRANTS, THAT WILL BE INSTALLED AND THAT WILL COME INTO CONTACT WITH DRINKING WATER WILL CONFORM TO NSF INTERNATIONAL STANDARD 61 AS ADOPTED IN RULE 62-555.335, F.A.C., OR OTHER APPLICABLE STANDARDS, REGULATIONS, OR REQUIREMENTS REFERENCED IN PARAGRAPH 62-55.320 (3)(B), F.A.C.

3. ALL PIPE AND PIPE FITTINGS INSTALLED WILL CONTAIN NO MORE THAN 8.0% LEAD, AND ANY SOLDER OR FLUX USED IN THIS PROJECT WILL CONTAIN NO MORE THAN 0.2% LEAD.

4. ALL PIPE AND PIPE FITTINGS INSTALLED WILL BE COLOR-CODED OR MARKED IN ACCORDANCE WITH SUBPARAGRAPH 62-555.320 (21)(B) 3, F.A.C., USING BLUE AS A PREDOMINANT COLOR. (UNDERGROUND PLASTIC PIPE WILL BE SOLID-WALL BLUE PIPE, WILL HAVE A CO-EXTRUDED BLUE EXTERNAL SKIN, OR WILL BE WHITE OR BLACK PIPE WITH BLUE STRIPES INCORPORATED INTO, OR APPLIED TO, THE PIPE WALL; UNDERGROUND METAL OR CONCRETE PIPE WILL HAVE BLUE STRIPES APPLIED TO THE PIPE WALL. PIPE STRIPED DURING MANUFACTURING OF THE PIPE WILL HAVE CONTINUOUS STRIPES THAT RUN PARALLEL TO THE AXIS OF THE PIPE, THAT ARE LOCATED AT NO GREATER THAN 90-DEGREE INTERVALS AROUND THE PIPE, AND THAT WILL REMAIN INTACT DURING AND AFTER INSTALLATION OF THE PIPE. IF TAPE OR PAINT IS USED TO STRIPE PIPE DURING INSTALLATION OF THE PIPE, THE TAPE OR PAINT WILL BE APPLIED IN A CONTINUOUS LINE THAT RUNS PARALLEL TO THE AXIS OF THE PIPE AND THAT IS LOCATED ALONG THE TOP OF THE PIPE; FOR PIPE WITH AN INTERNAL DIAMETER OF 24 INCHES OR GREATER, TAPE OR PAINT WILL BE APPLIED IN CONTINUOUS LINES ALONG EACH SIDE OF THE PIPE AS WELL AS ALONG THE TOP OF THE PIPE. ABOVEGROUND PIPE WILL BE PAINTED BLUE OR WILL BE COLOR-CODED OR MARKED LIKE UNDERGROUND PIPE.)

5. ALL FIRE HYDRANTS THAT HAVE UNPLUGGED, UNDERGROUND DRAINS WILL BE LOCATED AT LEAST THREE FEET FROM ANY EXISTING OR PROPOSED STORM SEWER, STORMWATER FORCE MAIN, PIPELINE CONVEYING RECLAIMED WATER REGULATED UNDER PART III OF CHAPTER 62-610, F.A.C., OR VACUUM-TYPE SANITARY SEWER; AT LEAST SIX FEET FROM ANY EXISTING OR PROPOSED GRAVITY- OR PRESSURE-TYPE SANITARY SEWER, WASTEWATER FORCE MAIN, OR PIPELINE CONVEYING RECLAIMED WATER NOT REGULATED UNDER PART III OF CHAPTER 62-10, F.A.C.; AND AT LEAST TEN FEET FROM ANY EXISTING OR PROPOSED "ON-SITE SEWAGE TREATMENT AND DISPOSAL SYSTEM".

6. NEW OR ALTERED CHAMBERS, PITS, OR MANHOLES THAT CONTAIN VALVES, BLOW-OFFS, METERS, OR OTHER SUCH WATER DISTRIBUTION SYSTEMS APPURTENANCES WILL NOT BE CONNECTED DIRECTLY TO ANY SANITARY OR STORM SEWER, AND BLOW-OFFS OR AIR RELIEF VALVES INSTALLED UNDER THIS PROJECT WILL NOT BE CONNECTED DIRECTLY TO ANY SANITARY OR STORM SEWER.

7. NEW OR ALTERED WATER MAINS WILL BE INSTALLED IN ACCORDANCE WITH APPLICABLE AWWA STANDARDS OR IN ACCORDANCE WITH MANUFACTURERS' RECOMMENDED PROCEDURES.

8. A CONTINUOUS AND UNIFORM BEDDING WILL BE PROVIDED IN TRENCHES FOR UNDERGROUND PIPE INSTALLED; BACKFILL MATERIAL WILL BE TAMPED IN LAYERS AROUND UNDERGROUND PIPE INSTALLED AND TO A SUFFICIENT HEIGHT ABOVE THE PIPE TO ADEQUATELY SUPPORT AND PROTECT THE PIPE; AND UNSUITABLY SIZED STONES (AS DESCRIBED IN APPLICABLE AWWA STANDARDS OR MANUFACTURER'S RECOMMENDED INSTALLATION PROCEDURES) FOUND IN TRENCHES WILL BE REMOVED FOR A DEPTH OF AT LEAST SIX INCHES BELOW THE BOTTOM OF UNDERGROUND PIPE.

9. ALL WATER MAIN TEES, BENDS, PLUGS, AND HYDRANTS INSTALLED WILL BE PROVIDED WITH RESTRAINED JOINTS TO PREVENT MOVEMENT.

10. WATER MAINS THAT ARE CONSTRUCTED OF ASBESTOS-CEMENT OR POLYVINYL CHLORIDE PIPE WILL BE PRESSURE AND LEAKAGE TESTED IN ACCORDANCE WITH AWWA STANDARD C603 OR C605, RESPECTIVELY, AS INCORPORATED INTO RULE 62-555.330, F.A.C., AND ALL OTHER NEW OR ALTERED WATER MAINS INCLUDED IN THIS PROJECT WILL BE PRESSURE AND LEAKAGE TESTED IN ACCORDANCE WITH AWWA STANDARD C600 AS INCORPORATED INTO RULE 62-555.330 FAC.

11. WATER MAINS, INCLUDING FIRE HYDRANT LEADS AND INCLUDING SERVICE LINES THAT WILL BE UNDER THE CONTROL OF A PUBLIC WATER SYSTEM AND THAT HAVE AN INSIDE DIAMETER OF THREE INCHES OR GREATER, WILL BE DISINFECTED AND BACTERIOLOGICALLY EVALUATED IN ACCORDANCE WITH RULE 62-555.340, F.A.C.

12. NEW OR RELOCATED, UNDERGROUND WATER MAINS SHALL BE LAID TO PROVIDE A HORIZONTAL DISTANCE OF AT LEAST SIX FEET, AND PREFERABLY TEN FEET, BETWEEN THE OUTSIDE OF THE WATER MAIN AND THE OUTSIDE OF ANY EXISTING OR PROPOSED GRAVITY- OR PRESSURE-TYPE SANITARY SEWER, WASTEWATER FORCE MAIN, OR PIPELINE CONVEYING RECLAIMED WATER NOT REGULATED UNDER PART III OF CHAPTER 62-610, F.A.C.
THE MINIMUM HORIZONTAL SEPARATION DISTANCE BETWEEN WATER MAINS AND GRAVITY-TYPE SANITARY SEWERS SHALL BE REDUCED TO THREE FEET WHERE THE BOTTOM OF THE WATER MAIN IS LAID AT LEAST SIX INCHES ABOVE THE TOP OF THE SEWER. HOWEVER, IT IS PREFERABLE TO LAY THE WATER MAIN ABOVE THE OTHER PIPELINE.
NEW OR RELOCATED, UNDERGROUND WATER MAINS SHALL BE LAID TO TO PROVIDE A HORIZONTAL DISTANCE OF AT LEAST THREE FEET, AND PREFERABLY TEN FEET, BETWEEN THE OUTSIDE OF THE WATER MAIN AND THE OUTSIDE OF ANY EXISTING OR PROPOSED VACUUM-TYPE SANITARY-SEWER.

13. NEW OR RELOCATED, UNDERGROUND WATER MAINS CROSSING ANY EXISTING OR PROPOSED GRAVITY-OR VACUUM-TYPE SANITARY SEWER, SHALL BE LAID SO THE OUTSIDE OF THE WATER MAIN IS AT LEAST 6 INCHES, AND PREFERABLY 12 INCHES, ABOVE OR AT LEAST 12 INCHES BELOW THE OUTSIDE OF THE OTHER PIPELINE. HOWEVER, IT IS PREFERABLE TO LAY THE WATER MAIN ABOVE THE OTHER PIPELINE.
NEW OR RELOCATED, UNDERGROUND WATER MAINS CROSSING ANY EXISTING OR PROPOSED PRESSURE-TYPE SANITARY SEWER, WASTEWATER OR STORMWATER FORCE MAIN, OR PIPELINE CONVEYING RECLAIMED WATER SHALL BE LAID SO THE OUTSIDE OF THE WATER MAIN IS AT LEAST 12 INCHES ABOVE OR BELOW THE OUTSIDE OF THE OTHER PIPELINE. HOWEVER, IT IS PREFERABLE TO LAY THE WATER MAIN ABOVE THE OTHER PIPELINE.

14. AT THE UTILITY CROSSINGS DESCRIBED ABOVE, ONE FULL LENGTH OF WATER MAIN PIPE SHALL BE CENTERED ABOVE OR BELOW THE OTHER PIPELINE SO THE WATER MAIN JOINTS WILL BE AS FAR AS POSSIBLE FROM THE OTHER PIPELINE. ALTERNATIVELY, AT SUCH CROSSINGS, THE PIPES SHALL BE ARRANGED SO THAT ALL WATER MAIN JOINTS ARE AT LEAST THREE FEET FROM ALL JOINTS IN VACUUM-TYPE SANITARY SEWERS, OR PIPELINES CONVEYING RECLAIMED WATER REGULATED UNDER PART III OF CHAPTER 62-610, F.A.C., AND AT LEAST SIX FEET FROM ALL JOINTS IN GRAVITY-OR PRESSURE-TYPE SANITARY SEWERS, WASTEWATER FORCE MAINS, OR PIPELINES CONVEYING RECLAIMED WATER NOT REGULATED UNDER PART III OF CHAPTER 62-610, F.A.C.

15. WHERE AUTOMATIC AIR RELIEF VALVES ARE INSTALLED THE ARV WILL BE EXTENDED SUCH THAT THE OPEN END OF THE AIR RELIEF PIPE WILL BE SEPARATED FROM THE GROUND BY AT LEAST ONE FOOT AND WILL BE PROVIDED WITH A SCREENED, DOWNWARD FACING ELBOW.

SANITARY GRAVITY & FORCE MAINS

1. ALL PVC GRAVITY SANITARY SEWER SHALL BE SDR35, UNLESS OTHERWISE NOTED; AND ALL PVC SANITARY SEWER FORCEMAIN 4" THRU 12" SHALL BE C900/DR18, UNLESS OTHERWISE NOTED.

2. LEAKAGE TESTS FOR THE SANITARY SEWER SYSTEM SHALL MEET PROVIDER'S SPECIFICATIONS USING THE LOW PRESSURE AIR TEST METHOD, 5 PSI FOR 5 MINUTES AND SHALL NOT EXCEED 400 FEET IN LENGTH AND SHALL BE TESTED BETWEEN ADJACENT MANHOLES AND SHALL INCLUDE ALL LATERALS.

3. ALL PVC SANITARY FORCE MAINS SHALL BE COLOR-CODED OR MARKED USING GREEN AS A PREDOMINANT COLOR TO DIFFERENTIATE THE FORCE MAIN FROM OTHER UTILITY LINES.

4. MINIMUM SLOPE ALLOWED FOR SANITARY SEWER PIPE IS 0.40%.

5. PVC PIPE AND FITTINGS 4-INCHES THROUGH 15-INCHES SHALL CONFORM TO ASTM D3034, SDR35 OR 26.

6. PVC PIPE AND FITTINGS 18-INCHES THROUGH 27-INCHES SHALL CONFORM TO ASTM F679-T1, SDR35.

7. PVC PIPE AND FITTINGS SHALL BE SOLID GREEN IN COLOR.

8. DUCTILE IRON PIPE FOR GRAVITY OR NON-PRESSURE SERVICE SHALL BE DESIGNED IN ACCORDANCE WITH AND CONFORMING TO THE REQUIREMENTS OF ASTM A746 FOR INSTALLATION WITH TRENCH TYPE II, OR IN ACCORDANCE WITH ANSI/AWWA C150/A21.50 AND ANSI/AWWA C151/A21.51.

9. DUCTILE IRON FITTINGS FOR USE IN GRAVITY OR NON-PRESSURE SERVICE SHALL CONFORM TO THE REQUIREMENTS OF ANSI/AWWA C153/A21.53, COMPACT DUCTILE IRON FITTINGS.

10. DUCTILE IRON PIPE AND FITTINGS FOR GRAVITY OR NON-PRESSURE SERVICE SHALL HAVE AN INTERIOR LINING CONSISTING OF A MINIMUM 40 MILS OF A CERAMIC EPOXY COATING. REFER TO SPECIFICATIONS FOR DETAILS.

11. MATERIAL FOR GRAVITY SEWER PIPE AND FITTINGS SHALL BE AS SHOWN FOR THE FOLLOWING DEPTHS OF EXCAVATION: A. 5' TO 12' PVC, ASTM 3034/ASTM F679, SDR 35 B. LESS THAN 5' OR GREATER THAN 12': PVC, ASTM 3034, SDR 26

12. THE CONTRACTOR SHALL SUBMIT SHOP DRAWINGS ON ALL EQUIPMENT AND MATERIALS FOR APPROVAL BY THE ENGINEER AND SERVICE PROVIDER PRIOR TO PROCUREMENT.

13. PIPE MEASUREMENTS ON THE MAIN "TRUNK" SEWER SHALL BE FROM CENTER TO CENTER OF MANHOLES OR CLEANOUTS, UNLESS OTHERWISE NOTED.

14. PIPE MEASUREMENTS FOR SERVICE LATERALS SHALL BE FROM THE MAIN "TRUNK" SEWER TO THE PROPERTY LINE. THE DEPTH OF THE LATERAL AT THE PROPERTY LINE SHALL BE MEASURED AND RECORDED ON THE RECORD DRAWINGS.

15. FOR A SCHEDULED INTERRUPTION OF SANITARY SEWER MAIN FLOW, THE CONTRACTOR SHALL PROVIDE TO THE AGENCY HAVING JURISDICTION AND SERVICE PROVIDER FOR REVIEW A WRITTEN SCHEDULE AS TO THE METHOD AND DURATION OF FLOW INTERRUPTION.

16. DURING NORMAL SANITARY SEWER MAIN FLOW INTERRUPTION, THE CONTRACTOR SHALL PROVIDE UNINTERRUPTED BY-PASS FLOW AND SHALL PROVIDE ALL EQUIPMENT NECESSARY TO ACCOMPLISH THE SAME IN THE FORM OF, BUT NOT LIMITED TO, THE FOLLOWING: POWER, PUMPS, PIPING, APPURTENANT VALVES AND FITTINGS AND/OR SEPTIC TANKER TRUCK PUMPING, HAULING AND DISPOSAL SERVICES.

17. CONTRACTOR SHALL PAY FOR INSPECTION OF THE GRAVITY SEWER LINE BY A TV CAMERA SYSTEM. A VHS TAPE AND REPORT SHALL BE SUBMITTED TO ENGINEER FOR REVIEW AND APPROVAL PRIOR TO FINAL INSPECTION BY SERVICE PROVIDER'S AUTHORIZED REPRESENTATIVE.

HAZARDOUS MATERIALS

1. HAZARDOUS MATERIAL MEANS ANY SUBSTANCE: (A) THE PRESENCE OF WHICH REQUIRES INVESTIGATION OR REMEDIATION UNDER ANY PRESENT FEDERAL, STATE OR LOCAL STATUTE, REGULATION, ORDINANCE, RULE, CODE, ORDER, ACTION, POLICY OR COMMON LAW, OR (B) WHICH IS OR BECOMES DEFINED AS A "HAZARDOUS WASTE," "HAZARDOUS SUBSTANCE," POLLUTANT OR CONTAMINANT UNDER ANY PRESENT FEDERAL, STATE OR LOCAL STATUTE, REGULATION, RULE OR ORDINANCE OR AMENDMENTS THERETO INCLUDING, WITHOUT LIMITATION, THE COMPREHENSIVE ENVIRONMENTAL RESPONSE COMPENSATION AND LIABILITY ACT (42 U.S.C. SECTIONS 9601 ET SEQ.) AND/OR THE RESOURCE CONSERVATION AND RECOVERY ACT (42 U.S.C. SECTIONS 6901 ET SEQ.), OR (C) WHICH IS TOXIC, EXPLOSIVE, CORROSIVE, FLAMMABLE, INFECTIOUS, RADIOACTIVE, CARCINOGENIC, MUTAGENIC, OR OTHERWISE HAZARDOUS AND IS REGULATED BY ANY GOVERNMENTAL AUTHORITY, AGENCY, DEPARTMENT, COMMISSION, BOARD, AGENCY OR INSTRUMENTALITY OF THE UNITED STATES, THE STATE IN WHICH THE PREMISES ARE LOCATED OR ANY POLITICAL SUBDIVISION THEREOF, OR (D) THE PRESENCE OF WHICH ON THE PREMISES CAUSES OR THREATENS TO CAUSE A NUISANCE UPON THE PREMISES OR TO ADJACENT PROPERTIES OR POSES OR THREATENS TO POSE A HAZARD TO THE HEALTH OR SAFETY OF PERSONS ON OR ABOUT THE PREMISES, OR (E) WHICH CONTAINS GASOLINE, DIESEL FUEL OR OTHER PETROLEUM HYDROCARBONS, OR (F) WHICH CONTAINS POLYCHLORINATED BIPHENYLS (PCBS), ASBESTOS, LEAD OR UREA FORMALDEHYDE FOAM INSULATION.

2. CONTRACTOR AND ITS SUBCONTRACTORS SHALL USE, HANDLE, TRANSPORT, AND DISPOSE OF ALL HAZARDOUS MATERIALS (AS DEFINED HEREIN) IN COMPLIANCE WITH ALL PRESENT FEDERAL, STATE AND LOCAL ENVIRONMENTAL, HEALTH OR SAFETY LAW, INCLUDING, BUT NOT LIMITED TO, ALL SUCH STATUTES, REGULATIONS, RULES, ORDINANCES, CODES, AND RULES OF COMMON LAW.

3. CONTRACTOR FURTHER AGREES THAT CONTRACTOR AND ITS SUBCONTRACTORS SHALL NOT CAUSE THE DISCHARGE, RELEASE OR DISPOSAL OF ANY HAZARDOUS MATERIAL CREATED BY ITS WORK ON OR ABOUT THE JOB SITE. IN THE EVENT OF ANY SPILL, RELEASE OR ANY OTHER REPORTABLE OCCURRENCE, CONTRACTOR SHALL NOTIFY THE APPROPRIATE GOVERNMENTAL AGENCY AND SHALL TAKE SUCH ACTION AS MAY BE NECESSARY TO MINIMIZE THE DELETERIOUS EFFECT OF SUCH SPILL ON PERSONS OR PROPERTY.

4. CONTRACTOR AND ITS SUBCONTRACTORS SHALL, UPON COMPLETION OF PERFORMANCE OF ALL DUTIES UNDER THIS CONTRACT, REMOVE ALL SUPPLIES, MATERIALS, AND WASTE CONTAINING ANY HAZARDOUS MATERIAL FROM THE JOB SITE. CONTRACTOR SHALL BEAR FULL FINANCIAL RESPONSIBILITY, AS BETWEEN THE PARTIES OF THIS CONTRACT, FOR THE COMPLIANCE OF CONTRACTOR AND ITS SUBCONTRACTORS WITH THE PROVISIONS AS OUTLINED HEREIN.

5. CONTRACTOR AGREES TO INDEMNIFY, DEFEND, PROTECT AND HOLD THE OWNER HARMLESS FROM AND AGAINST ANY CLAIMS INCLUDING, WITHOUT LIMITATION, ACTUAL ATTORNEY'S FEES AND ANY COSTS OF INVESTIGATION, SOILS TESTING, GOVERNMENTAL APPROVALS, REMEDIATION AND CLEANUP ARISING OUT OF OR IN ANY WAY CONNECTED WITH THE FAILURE OF CONTRACTOR OR ITS SUBCONTRACTORS, OR THEIR AGENTS, EMPLOYEES, OFFICERS, OR REPRESENTATIVES, TO COMPLY WITH THE TERMS AS DESCRIBED HEREIN.

6. SHOULD CONTRACTOR OR ITS SUBCONTRACTORS DISCHARGE, RELEASE OR DISPOSE OF ANY HAZARDOUS MATERIAL ON OR ABOUT THE JOB SITE IN VIOLATION OF THIS PARAGRAPH, CONTRACTOR SHALL IMMEDIATELY INFORM THE OWNER IN WRITING. IN THE EVENT OF ANY SPILL, RELEASE OR ANY OTHER REPORTABLE OCCURRENCE, CONTRACTOR SHALL NOTIFY THE APPROPRIATE GOVERNMENTAL AGENCY(S) AND SHALL TAKE SUCH ACTION AS MAY BE NECESSARY TO MINIMIZE THE DELETERIOUS EFFECT OF SUCH SPILL ON PERSONS, PROPERTY OR THE ENVIRONMENT.

7. IN THE EVENT CONTRACTOR OR ITS SUBCONTRACTORS ENCOUNTER ON THE PREMISES ANY PIPELINE, UNDERGROUND STORAGE TANK OR OTHER CONTAINER, OF ANY KIND, THAT MAY CONTAIN A HAZARDOUS MATERIAL, OR ENCOUNTER MATERIAL REASONABLY BELIEVED TO BE A HAZARDOUS MATERIAL, CONTRACTOR SHALL IMMEDIATELY STOP WORK IN THE AREA AFFECTED AND REPORT THE CONDITION TO THE OWNER IN WRITING.

8. IF CONTRACTOR OR ITS SUBCONTRACTORS DO NOT COMPLY WITH THE REQUIREMENTS AS OUTLINED HEREIN, OWNER MAY, BUT IS NOT OBLIGATED TO, GIVE WRITTEN NOTICE OF VIOLATION TO CONTRACTOR. SHOULD CONTRACTOR OR ITS SUBCONTRACTORS FAIL TO COMPLY WITH THE REQUIREMENTS OF THE PARAGRAPH WITHIN TWENTY-FOUR (24) HOURS FROM THE TIME OWNER ISSUES SUCH WRITTEN NOTICE OF NONCOMPLIANCE OR WITHIN THE TIME OF AN ABATEMENT PERIOD SPECIFIED BY ANY GOVERNMENTAL AGENCY, WHICHEVER PERIOD IS SHORTER, CONTRACTOR SHALL BE IN MATERIAL DEFAULT OF THIS CONTRACT.

9. ALL AREAS USED FOR FUEL STORAGE SHALL HAVE THE PROPERTY OWNER'S PRIOR APPROVAL AND APPROPRIATE MEASURES SHALL BE TAKEN TO INSURE PROTECTION OF GROUNDWATER AND SOIL RESOURCES.

PRE-CONSTRUCTION

1. CONTRACTOR SHALL ATTEND A MANDATORY PRE-CONSTRUCTION MEETING WITH THE ENGINEER OF RECORD AND APPLICABLE STAFF OF THE LOCAL AGENCY HAVING JURISDICTION (E.G. CITY OR COUNTY) PRIOR TO ANY DISTURBANCE OF LAND, CLEARING OR DEMOLITION. CONTRACTOR MUST PROVIDE WRITTEN NOTICE OF THE PRE-CONSTRUCTION MEETING'S TIME, DATE AND LOCATION TO THE OWNER AND ENGINEER OF RECORD A MINIMUM OF 48 HOURS PRIOR TO.

2. IF ANY TESTING, INSPECTION OR APPROVAL UNDER THIS PARAGRAPH REVEAL DEFECTIVE WORK, CONTRACTOR SHALL NOT BE ALLOWED TO RECEIVE ANY ASSOCIATED COSTS AND THE OWNER SHALL BE ENTITLED TO DEDUCT FROM THE CONTRACT PRICE, BY ISSUING A CHANGE ORDER, OWNER'S COSTS ARISING OUT OF THE DEFECTIVE WORK, INCLUDING COSTS OF REPEATED PROCEDURES, COMPENSATION FOR ENGINEER'S AND DESIGN ENGINEER'S SERVICES AND OTHER RELATED COSTS.

3. SHOP DRAWINGS AND CERTIFICATIONS FOR ALL STORM DRAINAGE, WATER SYSTEM, SEWER SYSTEM, AND PAVING SYSTEM MATERIALS AND STRUCTURES ARE REQUIRED. THE CONTRACTOR SHALL SUBMIT SHOP DRAWINGS TO THE ENGINEER FOR APPROVAL PRIOR TO ORDERING THE MATERIALS REQUIRED FOR CONSTRUCTION.

4. THE CONTRACTOR SHALL PROVIDE THE ENGINEER 48-HOUR ADVANCE NOTIFICATION FOR THE FOLLOWING CONSTRUCTION AND OBSERVATION ACTIVITIES:

   SANITARY SEWER LAMPING AND VIDEO INSPECTION
   CONNECTIONS TO EXISTING SYSTEMS
   STORM DRAINAGE LAMPING
   INLET TOP POURS (REINFORCING STEEL CHECK)
   WATER AND FORCE MAIN PRESSURE TESTS
   BACTERIOLOGICAL SAMPLING
   BASE OBSERVATION & SOUNDING
   ASPHALT PLACEMENT
   PRE-FINAL OBSERVATION
   FINAL OBSERVATION

RECORD DRAWINGS & CERTIFICATION

1. PRIOR TO CONSTRUCTION, THE CONTRACTOR WILL OBTAIN A COPY OF THE MINIMUM REQUIREMENTS FOR AS-BUILT RECORD DRAWING ACCEPTANCE FOR THE AGENCY HAVING JURISDICTION (SUCH AS THE CITY OR COUNTY) AND/OR UTILITY SERVICE PROVIDER, FAMILIARIZE THEMSELVES WITH THESE REQUIREMENTS, AND PRODUCE AS-BUILT RECORD DRAWINGS THAT SUBSTANTIALLY COMPLY WITH OR EXCEED THESE REQUIREMENTS, INCLUDING ANY REQUIRED ELECTRONIC DATA SUBMITTALS.

2. AS-BUILT DRAWINGS SHALL BE ACCURATELY RECORDED AND CERTIFIED BY A LICENSED LAND SURVEYOR REGISTERED IN THE STATE OF FLORIDA AND SHALL MEET THE MINIMAL TECHNICAL STANDARDS SET FORTH BY THE FLORIDA BOARD OF SURVEYOR'S AND MAPPERS IN CHARTER 61G17-6, FLORIDA ADMINISTRATIVE CODE, PURSUANT TO SECTION 472.027 FLORIDA STATUTES.

3. THE CONTRACTOR WILL BE RESPONSIBLE TO PROVIDE SUFFICIENT AS-BUILT INFORMATION TO CONVEY THAT THE CONSTRUCTION HAS BEEN COMPLETED WITHIN ACCEPTABLE TOLERANCES TO THE APPROVED DESIGN AND SHALL INCLUDE BUT IS NOT LIMITED TO THE FOLLOWING:

   SANITARY SEWER:
   1. TOP ELEVATION OF EACH MANHOLE FRAME AND COVER.
   2. INVERT OF EACH LINE ENTERING AND LEAVING EACH MANHOLE/STRUCTURE.
   3. LENGTH OF EACH RUN OF MAIN BETWEEN MANHOLES (CENTER TO CENTER).
   4. ACTUAL GRADE OF PIPE BETWEEN MANHOLES.
   5. LOCATE ALL SERVICE WYES FROM DOWNSTREAM MANHOLE WITH DEPTH AT LOT LINE AND DISTANCE FROM THE MAIN LINE.
   6. LOCATE WITH MEASUREMENTS FROM PERMANENT VISIBLE OBJECTS ALL FITTINGS/ACCESSORIES NOT VISIBLE FROM THE SURFACE (MINIMUM TWO POINT TIES).

   WATER AND REUSE SYSTEM AND FORCE MAINS :
   1. ACTUAL LENGTHS OF PIPE BETWEEN BRANCHES AND VALVES IN THE RUN.
   2. LOCATE WITH MEASUREMENTS FROM PERMANENT VISIBLE OBJECTS ALL FITTINGS/ACCESSORIES NOT VISIBLE FROM THE SURFACE (MINIMUM TWO POINT TIES).
   3. LIST THE DEPTHS OF THE LINES AT ALL VALVES, FITTINGS AND FIRE HYDRANTS.

   OTHER IMPROVEMENTS:
   BUILDING(S), SIDEWALKS, PAVEMENT, CURB & GUTTER. SUBMIT CERTIFIED DRAWINGS TO THE ENGINEER TWO WEEKS PRIOR TO FINAL INSPECTION OF THE WORK TO BE CERTIFIED.

4. THE ENGINEER STRONGLY RECOMMENDS THAT THE CONTRACTOR KEEP A DAILY "AS-BUILT" SET OF DRAWINGS WHILE THE WORK BEING DONE IS VISIBLE EXPOSED ACCORDING TO THE CRITERIA OUTLINED HEREIN.

5. THE ENGINEER RESERVES THE RIGHT TO REQUIRE THE CONTRACTOR TO UNCOVER, RETEST AND/OR PERFORM ANY ACTION NECESSARY TO ENSURE THAT THE IMPROVEMENTS HAVE BEEN CONSTRUCTED IN ACCORDANCE WITH THE PLANS AND SPECIFICATIONS.

6. FINAL "AS-BUILT" DRAWINGS FOR POTABLE WATER SHALL CLEARLY INDICATE COMPLIANCE TO MINIMUM SEPARATION DISTANCES OR REQUIRED PIPE UPGRADES. ALL WATER MAIN AND FORCE MAIN PIPE FITTINGS SHALL BE REFERENCED TO AT LEAST TWO VISIBLE REFERENCE POINTS (SWING TIES) AND THE NEAREST DISTANCE TO THE CENTERLINE OF ROAD.

7. THE CONTRACTOR'S GEOTECHNICAL ENGINEER SHALL CERTIFY ALL SITE, UTILITY, AND ROADWAY COMPACTION AND ALL UNDERDRAIN AND PAVEMENT CONSTRUCTION TO BOWYER-SINGLETON & ASSOCIATES, INC.

8. ALL PVC WATER MAINS AND PVC FORCE MAINS SHALL BE INSTALLED WITH A SOLID COPPER "LOCATING WIRE" WITH SUFFICIENT GROUNDING POINTS AT MAXIMUM 500 FEET SPACING.

Dewberry

Dewberry Engineers Inc.
800 NORTH MAGNOLIA AVE
ORLANDO, FL 32803
SUITE 1000
PHONE: 407.843.5120
ENGINEERING BUSINESS -8794

WESTPORT RESERVE (PHASE 2B)

PORT ORANGE, FL

SEAL

Danielle Van De Loo
FL PE # 74676
7/1/2016

No.	DATE	BY	Description

REVISIONS

DRAWN BY TFS
APPROVED BY DMV
CHECKED BY NPS
DATE JANUARY 2016
DATUM NAVD 88

TITLE

GENERAL NOTES

PROJECT NO. 50079046 (CC 1)

C03

SHEET NO.

3:47:27 PM ...\CC1-SF PH1 GenNotes-02.dgn

OVERALL DEVELOPMENT SITE DATA	
SITE AREA	174.48
CURRENT ZONING	PC-A
	NEIGHBORHOOD DISTRICT 3
LAND USE	LDR
PROP. DWELLING UNITS	651
DENSITY	3.73 DU/AC
TREE PRESERVATION:	
SITE AREA	174.48 AC.
REQUIRED = 15% OF SITE AREA	26.17 AC. (1)
PROPOSED (15.08%)	26.32 AC. (2)
(1) EXIST. TREE CONSERVATION EASEMENTS NOT INCLUDED	
(2) EXCESS TREE PRESERVATION CAN BE USED TOWARD THE REMAINDER OF THE DEVELOPMENT	
DWELLING UNITS PER PHASE:	
MULTI-FAMILY PHASE 2A	360
SINGLE FAMILY PHASE 2B	64
SINGLE FAMILY PHASE 3	144
SINGLE FAMILY PHASE 4	77
SINGLE FAMILY PHASE 5B	6
TOTAL	651

SINGLE FAMILY SITE DATA	
GROSS SITE AREA	140.85 AC.
NET SITE AREA	95.48 AC. (1)
PROP. DWELLING UNITS	291
MAXIMUM BUILDING IMPERVIOUS COVERAGE	50%
(1) NET SITE AREA EQUALS GROSS SITE AREA MINUS WETLAND CONSERVATION, UPLAND BUFFERS, AND UPLANDS NOT INCLUDED IN OPEN SPACE.	
OPEN SPACE REQUIRED:	
OPEN SPACE (40%)	38.05 AC. (2)
COMMON OPEN SPACE (40%)	38.05 AC. (2)
(2) CALCULATED USING NET SITE AREA	
OPEN SPACE PROVIDED:	
TOTAL OPEN SPACE (43.97%)	41.98 AC. (3)
COMMON OPEN SPACE (43.97%)	41.98 AC. (4)
(3) EXIST. TREE CONSERVATION EASEMENTS NOT INCLUDED	
(4) EXCESS COMMON OPEN SPACE CAN BE USED TOWARD FUTURE CONTIGUOUS PHASES.	
BUILDING SETBACKS:	
FRONT	25'
SIDE	5'
SIDE CORNER	20'
REAR	20'

MAXIMUM LOT BUILDING COVERAGE:
LESS THAN 50% - GREATER THAN 35% REQUIRES AN OPEN SPACE OF CONTIGUOUS COMMON PLAY AREA OF 20,000 S.F. PER 250 LOTS
REQUIRED : 20,000 S.F. x 2 = 40,000 S.F. w/ 1 H.C. SPACE
PROPOSED: TRACT C IN WESTPORT RESERVE PHASE 2B = 154,661 S.F. (1 H.C. SPACE PROVIDED)

MULTI-FAMILY SITE DATA - 2A	
SITE AREA	33.63 AC.
PROP. DWELLING UNITS	360
MAXIMUM BUILDING IMPERVIOUS COVERAGE	40%
MINIMUM LIVING AREA	750 S.F.
MAXIMUM BUILDING HEIGHT	36'
OPEN SPACE REQUIRED:	
OPEN SPACE (40%)	13.45 AC.
COMMON OPEN SPACE (40%)	13.45 AC.
OPEN SPACE PROVIDED:	
TOTAL OPEN SPACE (61.70%)	20.75 AC. (1)
COMMON OPEN SPACE	13.71 AC. (1)
(1) EXCESS COMMON OPEN SPACE CAN BE USED TOWARD FUTURE CONTIGUOUS PHASES.	
BUILDING SEPARATIONS:	
FRONT	30'
SIDE	25'
REAR	25'
NOTE: ROW FOR CORACI BOULEVARD IS NOT INCLUDED IN THE NUMBERS ABOVE.	

COMMON OPEN SPACE AREAS (SINGLE FAMILY)

COMMON OPEN SPACE AREAS (MULTI-FAMILY)

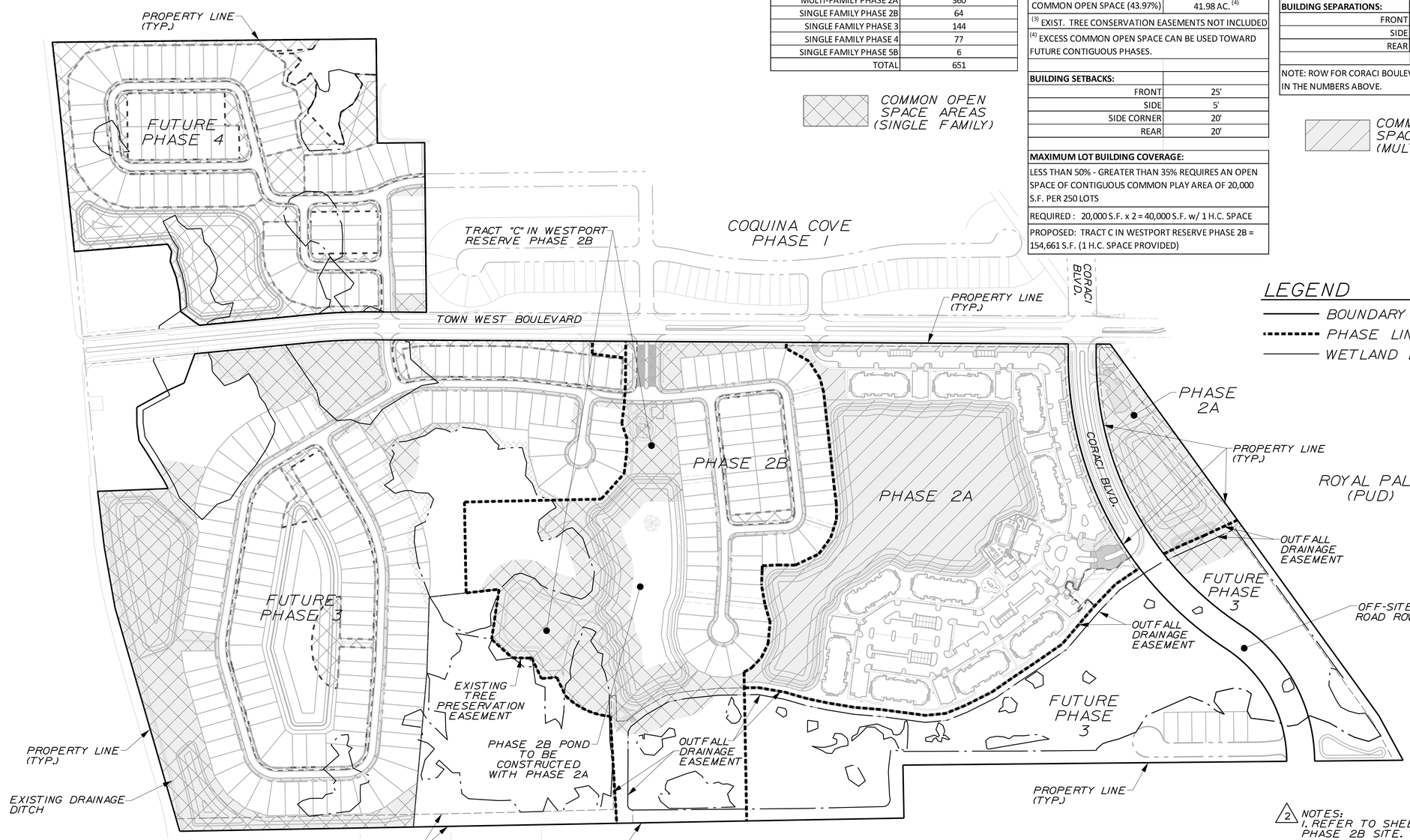

LEGEND

- BOUNDARY LINE
- PHASE LINE
- WETLAND LINE

NOTES:
1. REFER TO SHEET No. C07 FOR PHASE 2B SITE.
2. ALL FUTURE PHASES WILL BE REVIEWED AND PERMITED SEPARATELY FROM PHASE 2B.
3. FUTURE PROPOSED WETLAND IMPACTS ARE SUBJECT TO PERMITTING APPROVAL.

Dewberry

Dewberry Engineers Inc.
800 NORTH MAGNOLIA AVE
ORLANDO, FL 32803
SUITE 1000
PHONE: 407.843.5120
ENGINEERING BUSINESS -8794

WESTPORT RESERVE (PHASE 2B)

PORT ORANGE, FL

SEAL

Danielle Van De Loo
FL PE # 74676
7/1/2016

SCALE NORTH

0' 200' 400'

N

No.	DATE	BY	Description
3	7-1-16	TFS	REV PER CITY COMMENTS
2	4-21-16	KJK	REV PER CITY COMMENTS

REVISIONS

DRAWN BY	TFS
APPROVED BY	DMV
CHECKED BY	NPS
DATE	JANUARY 2016
DATUM	NAVD 88

TITLE

OVERALL DEVELOPMENT PLAN

PROJECT NO. 50079046 (CC 1)

C04

SHEET NO.

3:47:42 PM ...\CC1-SF PH1 OverallDevelopment.dgn

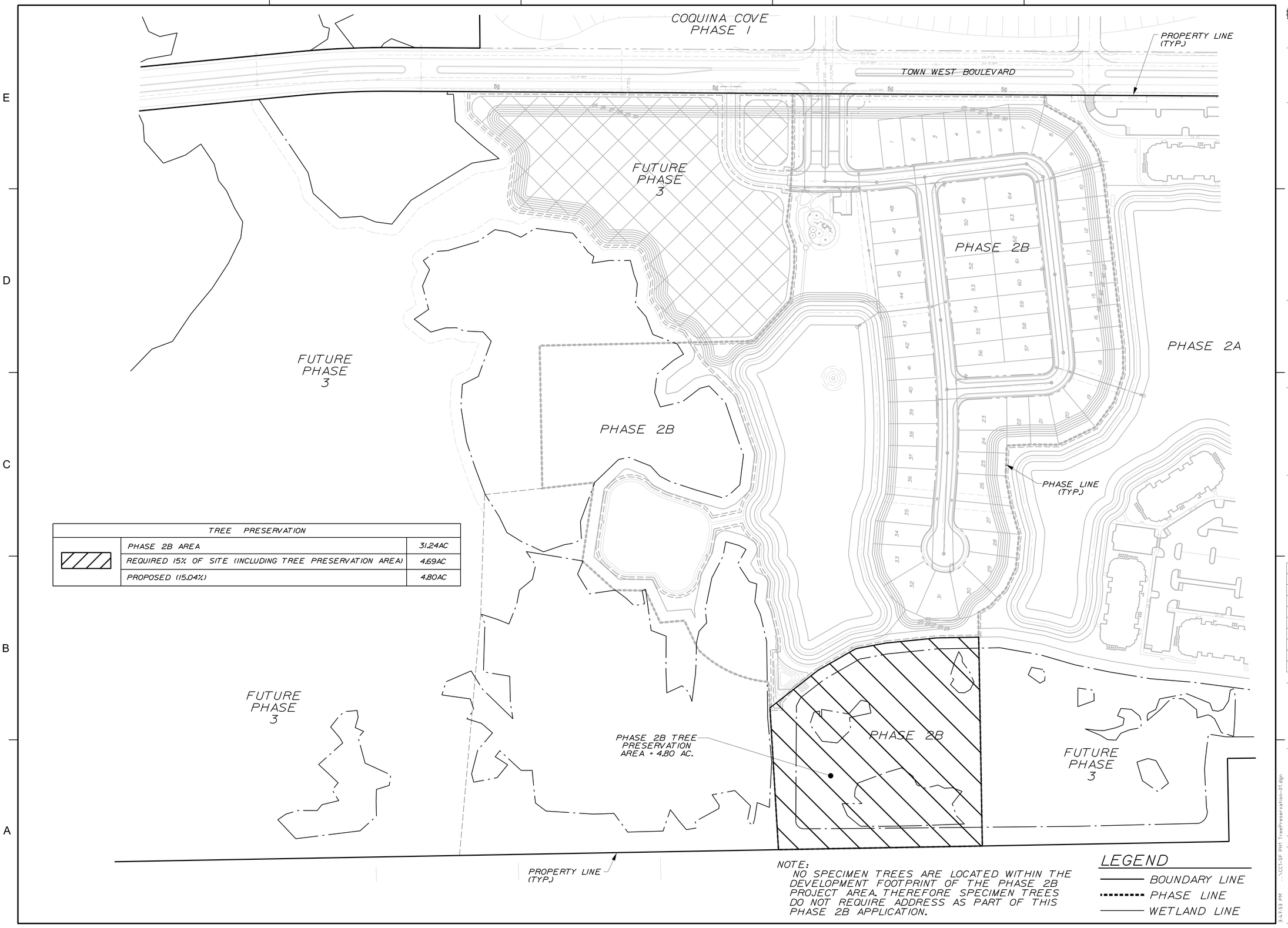

TREE PRESERVATION		
	PHASE 2B AREA	31.24AC
	REQUIRED 15% OF SITE (INCLUDING TREE PRESERVATION AREA)	4.69AC
	PROPOSED (15.04%)	4.80AC

NOTE:
NO SPECIMEN TREES ARE LOCATED WITHIN THE DEVELOPMENT FOOTPRINT OF THE PHASE 2B PROJECT AREA. THEREFORE SPECIMEN TREES DO NOT REQUIRE ADDRESS AS PART OF THIS PHASE 2B APPLICATION.

LEGEND
- BOUNDARY LINE
- PHASE LINE
- WETLAND LINE

Dewberry

Dewberry Engineers Inc.
800 NORTH MAGNOLIA AVE
ORLANDO, FL 32803
SUITE 1000
PHONE: 407.843.5120
ENGINEERING BUSINESS -8794

WESTPORT RESERVE (PHASE 2B)

PORT ORANGE, FL

SEAL

7/1/2016

KEY PLAN

SCALE NORTH
0' 100' 400'
N

No.	DATE	BY	Description
2	4--21-16	KJK	REV PER CITY COMMENTS

REVISIONS

DRAWN BY	TFS
APPROVED BY	DMV
CHECKED BY	NPS
DATE	JANUARY 2016
DATUM	NAVD 88

TITLE

PHASE 2B TREE PRESERVATION PLAN

PROJECT NO. 50079046 (CC 1)

C04A 2

SHEET NO.

...\CC1-SF PH1 TreePreservation-01.dgn 3:47:53 PM

LEGEND

- BOUNDARY LINE
- PHASE LINE
- WETLAND LINE

NOTES:

1.) EXCESS AREAS SUITABLE FOR TREE PRESERVATION WITHIN 2B CAN BE USED TO MEET TREE PRESERVATION REQUIREMENTS FOR FUTURE PHASES OF DEVELOPMENT.

2.) FUTURE TREE CONSERVATION AREAS WILL BE ESTABLISHED WITH EACH PHASE.

2 3.) NO SPECIMEN TREES ARE LOCATED WITHIN THE DEVELOPMENT FOOTPRINT OF THE PHASE 2A AND 2B PROJECT AREA. THEREFORE SPECIMEN TREES DO NOT REQUIRE ADDRESS AS PART OF THIS PHASE 2A AND 2B APPLICATION.

2

TREE PRESERVATION		
	OVERALL SITE AREA	174.48 AC.
	REQUIRED 15% OF SITE (INCLUDING TREE PRESERVATION AREA)	26.17 AC.
	PROPOSED (15.09%)	26.32 AC.
	PHASE 2A AREA	33.63 AC.
	REQUIRED 15% OF SITE (INCLUDING TREE PRESERVATION AREA)	5.04 AC.
	PROPOSED (15.01%)	5.06 AC.
	PHASE 2B AREA	31.24 AC.
	REQUIRED 15% OF SITE (INCLUDING TREE PRESERVATION AREA)	4.69 AC.
	PROPOSED (15.04%)	4.80 AC.
	FUTURE PHASE AREA	109.61 AC.
	REQUIRED 15% OF SITE (INCLUDING TREE PRESERVATION AREA)	16.44 AC.
	PROPOSED (15.13%)	16.46 AC.

NOTE:
FUTURE PROPOSED WETLAND IMPACTS ARE SUBJECT TO PERMITTING & APPROVAL.

Dewberry

Dewberry Engineers Inc.
800 NORTH MAGNOLIA AVE
ORLANDO, FL 32803
SUITE 1000
PHONE: 407.843.5120
ENGINEERING BUSINESS -8794

WESTPORT RESERVE (PHASE 2B)

PORT ORANGE, FL

SEAL

7/1/2016

KEY PLAN

SCALE 0' 200' 400'

NORTH

N

No.	DATE	BY	Description
2	4-21-16	KJK	REV PER CITY COMMENTS

REVISIONS

DRAWN BY	TFS
APPROVED BY	DMV
CHECKED BY	NPS
DATE	JANUARY 2016
DATUM	NAVD 88

TITLE

OVERALL TREE PRESERVATION PLAN

PROJECT NO. 50079046 (CC 1)

C04B 2

SHEET NO.

3:47:55 PM ...\CCI-SF PH1 TreePreservation-02.dgn

LEGEND

- BOUNDARY LINE
- WETLAND LINE
- EXIST. CONSERVATION ESMT.

NOTE:
PLEASE REFER TO TOPOGRAPHIC AND BOUNDARY SURVEY PREPARED BY DEWBERRY UNDER SEPARATE COVER FOR FURTHER DETAIL, LEGIBILITY AND TREE SURVEY.

Dewberry

Dewberry Engineers Inc.
800 NORTH MAGNOLIA AVE
ORLANDO, FL 32803
SUITE 1000
PHONE: 407.843.5120
ENGINEERING BUSINESS -8794

WESTPORT RESERVE (PHASE 2B)

PORT ORANGE, FL

SEAL

7/1/2016

SCALE 0' 100' 200'
NORTH
SCALE: 1"=100'
N

No.	DATE	BY	Description
2	4-21-16	KJK	REV PER CITY COMMENTS

REVISIONS

DRAWN BY	TFS
APPROVED BY	DMV
CHECKED BY	NPS
DATE	JANUARY 2016
DATUM	NAVD 88

TITLE

EXISTING CONDITIONS PLAN

PROJECT NO. 50079046 (CC 1)

C05

SHEET NO.

...\CC1-SF PH1 ExConditions.dgn
3-4-8 03 PM

TEMP. GRAVEL CONSTRUCTION ENTRANCE (SEE DETAIL SHEET C20)

INLET PROTECTION (TYP.)

TOWN WEST BOULEVARD

TEMP. 20' WIDE EMERGENCY SYABILIZED ACCESS

EXISTING STOCKPILE AREA

EXISTING SWALES TO REMAIN

PHASE 2B

TEMP. SILT FENCE (TYP.)

TEMP. SILT FENCE (TYP.)

TEMP. DOUBLE SILT FENCE (TYP.)

PROPOSED FUTURE PRESERVATION

PHASE LINE (TYP.)

PHASE 2A

PHASE LINE (TYP.)

MIN. 25' WETLAND BUFFER (TYP.)

TEMP. DOUBLE SILT FENCE (TYP.)

EXISTING TREE PRESERVATION EASEMENT (O.R.B. 5565, PG. 3008)

EXISTING SWALES TO REMAIN

PROPOSED TREE PRESERVATION

TEMP. DOUBLE SILT FENCE (TYP.)

NOTE: USE PLAT FOR ALL CONSTRUCTION LAYOUT WORK.

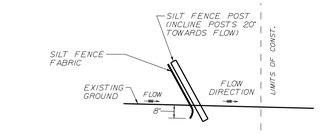

FDOT APPROVED TEMPORARY SILT FENCE PRE-ASSEMBLED IN 100' ROLLS UTILIZING 2"X4" WOODEN POSTS AT 8'C/C MAXIMUM WITH 3' OF WOVEN GEOTEXTILE MATERIAL MEETING THE REQUIREMENTS OF SEC.985-4, SIMILAR & EQUAL TO THAT SUPPLIED BY FIFIPIPE CO. OF TAMPA, FLA.

NOTES:

CONTRACTOR IS RESPONSIBLE FOR MAINTENANCE AS FOLLOWS:

1. SILT FENCES SHALL BE INSPECTED IMMEDIATELY AFTER EACH RAINFALL AND AT LEAST DAILY DURING PROLONGED RAINFALL. ANY REQUIRED REPAIRS SHALL BE MADE IMMEDIATELY.
2. SHOULD THE FABRIC DECOMPOSE OR BECOME INEFFECTIVE PRIOR TO THE END OF ITS USE, IT SHALL BE REPLACED PROMPTLY.
3. SEDIMENT DEPOSITS SHALL BE REMOVED AFTER EACH STORM EVENT.
4. ANY SEDIMENT DEPOSITS LEFT IN PLACE AFTER THE SILT FENCE IS NO LONGER REQUIRED SHALL BE DRESSED TO CONFORM WITH THE FINISHED GRADE, PREPARED AND SEEDED.
5. GEOTEXTILE MATERIAL TO MEET THE REQUIREMENTS OF SEC. 985-4.

TYPICAL SILT FENCE DETAIL

N.T.S.

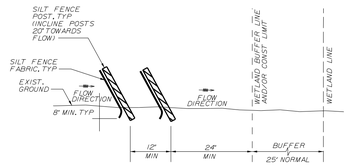

FDOT APPROVED TEMPORARY SILT FENCE PRE-ASSEMBLED IN 100' ROLLS UTILIZING 2"X 2"X 4' WOODEN POSTS @ 8' C/C MAX. w/3' OF WOVEN GEOTEXTILE MATERIAL MEETING THE REQUIREMENTS OF SEC. 985-4, SIMILAR & EQUAL TO THAT SUPPLIED BY FIFEPIPE CO. OF TAMPA FLA.

NOTES:

CONTRACTOR IS RESPONSIBLE FOR MAINTENANCE AS FOLLOWS:

1. SILT FENCES SHALL BE INSPECTED IMMEDIATELY AFTER EACH RAINFALL AND AT LEAST DAILY DURING PROLONGED RAINFALL. ANY REQUIRED REPAIRS SHALL BE MADE IMMEDIATELY.
2. SHOULD THE FABRIC DECOMPOSE OR BECOME INEFFECTIVE PRIOR TO THE END OF ITS USE, IT SHALL BE REPLACED PROMPTLY.
3. SEDIMENT DEPOSITS SHALL BE REMOVED AFTER EACH STORM EVENT.
4. ANY SEDIMENT DEPOSITS LEFT IN PLACE AFTER THE SILT FENCE IS NO LONGER REQUIRED SHALL BE DRESSED TO CONFORM WITH THE FINISHED GRADE, PREPARED AND SEEDED.

***NOTE:
TEMP. SILT FENCE SINGLE ROW ALONG INSIDE OF PERIMETER OF P/L & ALONG EXISTING PONDS & DOUBLE ROW ALONG WETLAND BUFFERS. THE EROSION CONTROL MEASURES DEPICTED ON THE PLANS ARE THE MINIMUM REQUIRED. ADDITIONAL MEASURES WILL BE UTILIZED BY THE CONTRACTOR AS NEEDED BASED ON ACTUAL SITE CONDITIONS.

WETLAND/POND SILT FENCE DETAIL 2

N.T.S.

LEGEND 2

- BOUNDARY LINE
- PHASE LINE
- UPLAND BUFFER
- WETLAND LINE
- SINGLE ROW SILT FENCE
- DOUBLE ROW SILT FENCE

NOTES: 2
1.) ACCESS SHALL BE MADE THROUGH TEMPORARY GRAVEL CONSTRUCTION ENTRANCE ONLY.
2.) CONTRACTOR TO PROVIDE SWPPP PRIOR TO THE PRE-CONSTRUCTION MEETING.
3.) SEE SHEET C07 FOR CITY EROSION CONTROL DETAILS.
4.) SILT FENCE TO REMAIN IN PLACE UNTIL COMPLETION OF CONSTRUCTION AND STABILIZATION OF SLOPES.

NOTE:
SEE SHEET C20 FOR STANDARD CITY EROSION CONTROL DETAILS.

SCALE 0' 80' 160'
SCALE: 1"=80'
NORTH

No.	DATE	BY	Description
2	4-21-16	KJK	REV PER CITY COMMENTS

REVISIONS

DRAWN BY	TFS
APPROVED BY	DMV
CHECKED BY	NPS
DATE	JANUARY 2016
DATUM	NAVD 88

TITLE

EROSION CONTROL PLAN

PROJECT NO. 50079046 (CC 1)

C06

SHEET NO.

Dewberry

Dewberry Engineers Inc.
800 NORTH MAGNOLIA AVE
ORLANDO, FL 32803
SUITE 1000
PHONE: 407.843.5120
ENGINEERING BUSINESS -8794

WESTPORT RESERVE (PHASE 2B)

PORT ORANGE, FL

SEAL

Danielle Van De Loo
FL PE # 74676
7/1/2016

3:48:20 PM ...\CC1-SF PH1 ErosionControl.dgn

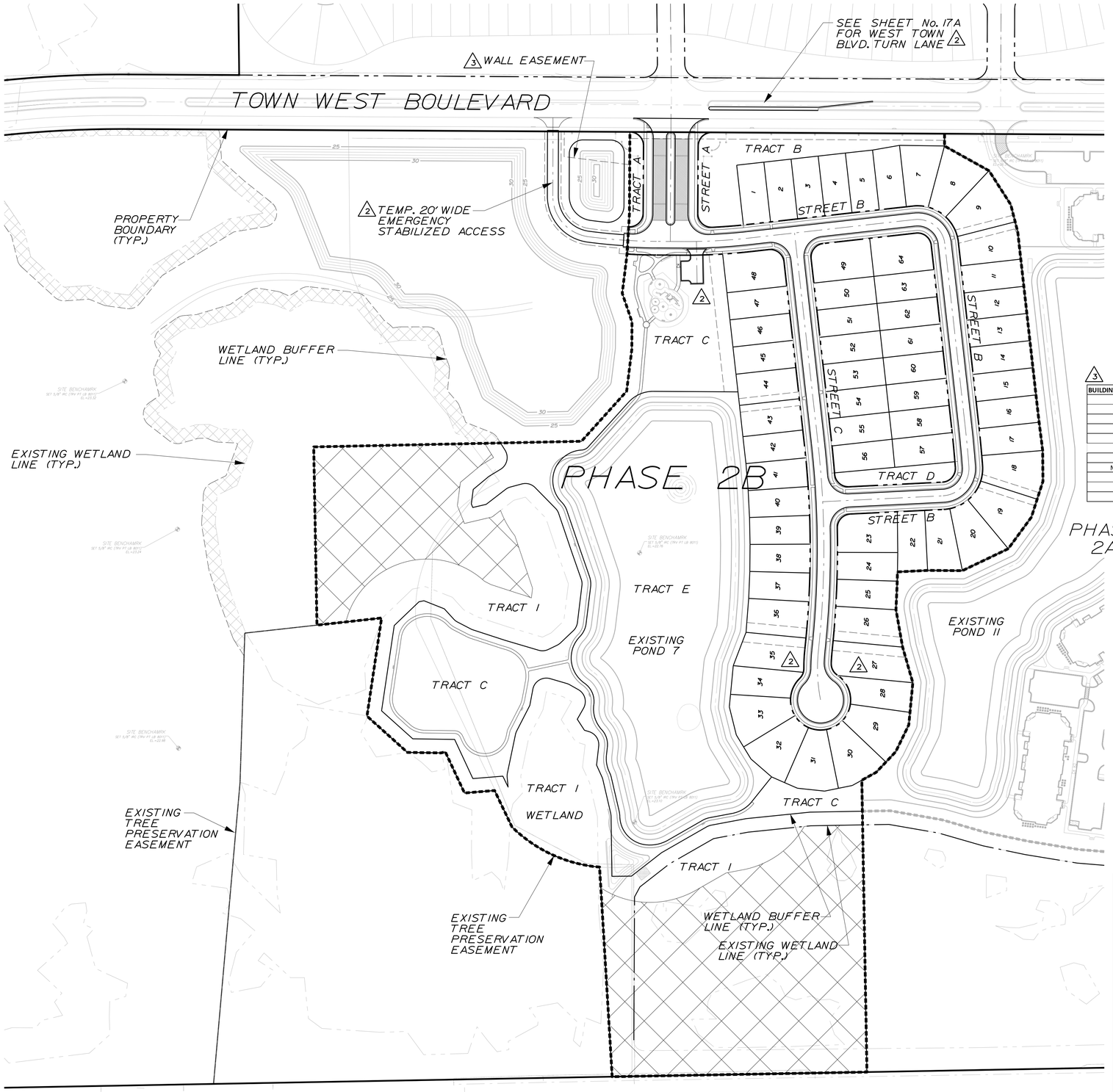

NOTE: USE PLAT FOR ALL CONSTRUCTION LAYOUT WORK.

TRACT C
PLAY AREA PARK TO INCLUDE AT MINIMUM:
1.) PERIMETER SIDEWALK
2.) 4 PARK BENCHES, 6' LONG
3.) 1 HANDICAP PARKING SPACE
4.) PLAYFIELD SURROUNDED BY A 4' TALL DECORATIVE FENCE

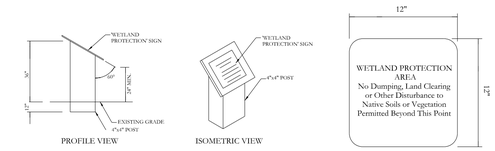

TYPICAL 'WETLAND PROTECTION' SIGN

NOTE:
TO BE POSTED ON 50 FOOT CENTERS IN COMMON AREAS ON THE LANDWARD EDGE OF THE BUFFER (NOT IN THE BUFFER), AND ON EVERY OTHER INDIVIDUAL LOT LINE FOR RESIDENTIAL PROPERTIES ADJACENT.

3 SITE DATA

PROJECT AREAS	AREA (AC.)	%
GREEN AREA (TOTAL)	19.07	61.04%
COMMON AREA	0.86	2.75%
AMENITY AREA	3.49	11.17%
DRAINAGE AREA	5.20	16.65%
WETLAND CONSERVATION (included in open space)	2.01	6.43%
WETLAND CONSERVATION (not included in open space)	5.99	19.17%
UPLAND BUFFERS	1.52	4.87%
RIGHT-OF-WAYS (TOTAL)	3.02	9.67%
ROADWAY	1.78	5.70%
R.O.W. GREEN AREA/OPEN SPACE	1.24	3.97%
LOTS (TOTAL)	9.15	29.29%
LOTS OUTSIDE BUFFER	9.15	29.29%
TOTAL GROSS PROJECT AREA	31.24	100.00%
(1) TOTAL NET PROJECT AREA	25.25	

(1) NET PROJECT AREA EQUALS GROSS AREA MINUS WETLAND CONSERVATION NOT INCLUDED IN OPEN SPACE (31.24 AC. - 5.99 AC. = 25.25 AC.)

OPEN SPACE REQUIRED	AREA (AC.)	%
OPEN SPACE	10.10 (2)	40.00%
COMMON OPEN SPACE	10.10 (2)	40.00%

(2) CALCULATED USING NET PROJECT AREA

OPEN SPACE PROVIDED	AREA (AC.)	%
COMMON AREA	0.86	3.41%
AMENITY AREA	3.49	13.82%
DRAINAGE AREA	5.20	20.59%
WETLAND CONSERVATION (included in open space)	2.01	7.96%
UPLAND BUFFERS	1.52	6.02%
R.O.W. GREEN AREA/OPEN SPACE	1.24	4.91%
30% LOT OPEN SPACE	2.75	10.87%
TOTAL	17.07	67.58%

COMMON OPEN SPACE PROVIDED	AREA (AC.)	%
COMMON AREA	0.86	3.41%
AMENITY AREA	3.49	13.82%
DRAINAGE AREA	2.78 (3)	11.01%
WETLAND CONSERVATION (included in open space)	2.01 (3)	7.96%
UPLAND BUFFERS	1.52	6.02%
R.O.W. GREEN AREA/OPEN SPACE	1.24	4.91%
TOTAL	11.90 (4)	47.13%

(3) PORTION OF DRAINAGE AREA/WETLAND CONSERVATION CONSIDERED AS COMMON OPEN SPACE WHICH IS DELINEATED AS THE AREA WITHIN 100' OF PUBLIC PEDESTRIAN ACCESS.

(4) EXCESS COMMON OPEN SPACE CAN BE USED TOWARD FUTURE CONTIGUOUS PHASES.

3

BUILDING SETBACK REQUIREMENTS:	FEET
FRONT	25
REAR	20
SIDE = LOTS ≤ 65'	5
SIDE = LOTS > 65'	7.5
SIDE CORNER	20

MINIMUM OPEN SPACE	40%
MAXIMUM BUILDING COVERAGE	50%
MAXIMUM BUILDING HEIGHT	36 FEET
MINIMUM LOT SIZE	50' x 110'
AVERAGE LOT SIZE	50' x 110'

2 TRACT SUMMARY

TRACT	AREA	DESCRIPTION	OWNERSHIP	MAINTENANCE
A	0.09	COMMON OPEN SPACE	HOA	HOA
B	0.62	COMMON OPEN SPACE	HOA	HOA
C	3.49	COMMON OPEN SPACE	HOA	HOA
D	0.15	COMMON OPEN SPACE	HOA	HOA
E	5.20	COMMON OPEN SPACE/POND	HOA	HOA
I	9.51	OPEN SPACE	HOA	HOA

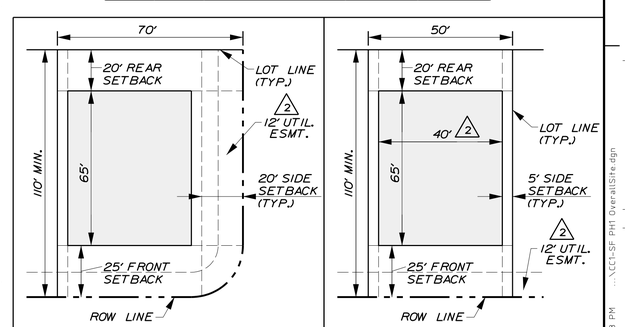

TYPICAL CORNER LOT LAYOUT

TYPICAL 50' LOT LAYOUT

Dewberry

Dewberry Engineers Inc.
800 NORTH MAGNOLIA AVE
ORLANDO, FL 32803
SUITE 1000
PHONE: 407.843.5120
ENGINEERING BUSINESS -8794

WESTPORT RESERVE (PHASE 2B)

PORT ORANGE, FL

SEAL

Danielle Van De Loo
FL PE # 74676
7/1/2016

SCALE 0' 100' 200'
SCALE: 1"=100'
NORTH
N

No.	DATE	BY	Description
3	7-1-16	TFS	REV PER CITY COMMENTS
2	4-21-16	KJK	REV PER CITY COMMENTS

REVISIONS

DRAWN BY	TFS
APPROVED BY	DMV
CHECKED BY	NPS
DATE	JANUARY 2016
DATUM	NAVD 88

TITLE

OVERALL SITE PLAN

PROJECT NO. 50079046 (CC 1)

C07

SHEET NO.

...\CC1-SF PH1 OverallSite.dgn 3:48:23 PM

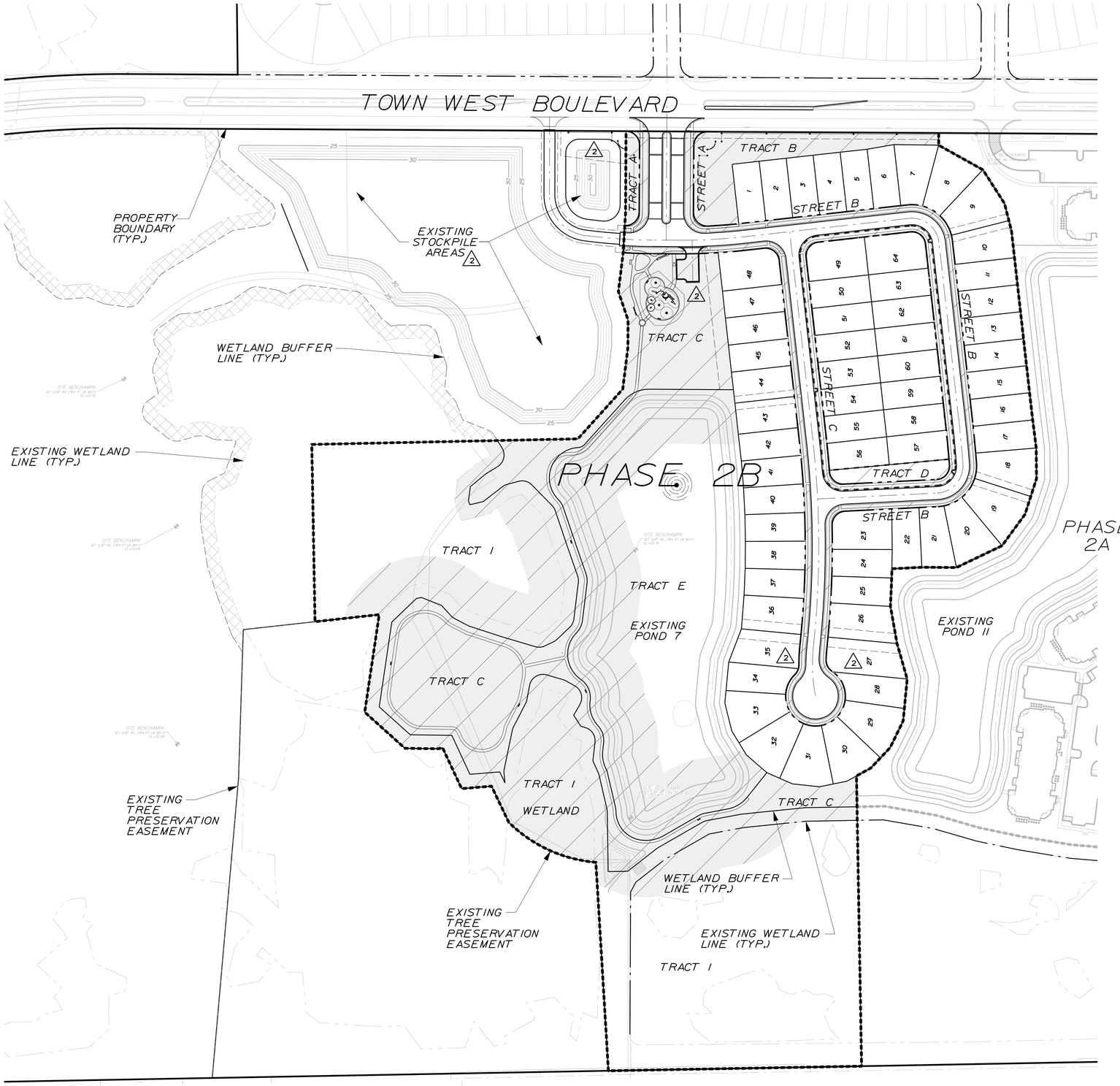

NOTE: USE PLAT FOR ALL CONSTRUCTION LAYOUT WORK.

2 MAXIMUM LOT BUILDING COVERAGE:
LESS THAN 50% - GREATER THAN 35% REQUIRES AN OPEN SPACE OF CONTIGUOUS COMMON PLAY AREA OF 20,000 S.F. PER 250 LOTS
REQUIRED : 20,000 S.F. x 2 = 40,000 S.F. w/ 1 H.C. SPACE
PROPOSED: TRACT C IN WESTPORT RESERVE PHASE 2B = 154,661 S.F. (1 H.C. SPACE PROVIDED)

SEC.29 (d)(10) PLAY AREA REQUIREMENTS: 2
TRACT C IS PROVIDING 154,661 SQ.FT.
THUS MEETING THE REQUIREMENT FOR
THE ENTIRE DEVELOPMENT INCLUDING
PHASES 2B, 3 & 4.

COMMON OPEN SPACE 2 3

Dewberry

Dewberry Engineers Inc.
800 NORTH MAGNOLIA AVE
ORLANDO, FL 32803
SUITE 1000
PHONE: 407.843.5120
ENGINEERING BUSINESS -8794

WESTPORT RESERVE
(PHASE 2B)

PORT ORANGE, FL

SEAL

Danielle Van De Loo
FL PE # 74676
7/1/2016

SCALE 0' 100' 200'
SCALE: 1"=100'
NORTH
N

No.	DATE	BY	Description
3	7-1-16	TFS	REV PER CITY COMMENTS
2	4-21-16	KJK	REV PER CITY COMMENTS

REVISIONS

DRAWN BY	TFS
APPROVED BY	DMV
CHECKED BY	NPS
DATE	JANUARY 2016
DATUM	NAVD 88

TITLE

COMMON OPEN SPACE

PROJECT NO. 50079046 (CC 1)

C07A 2

SHEET NO.

...\CC1-SF PH1 Common.dgn 3:48:30 PM

NOTE:
SEE SHEET No. C32
FOR TYPICAL PVMT.
SECTIONS.

TRACT C (PARK)
TRACT I
WETLAND BUFFER LINE (TYP.)
TRACT I
EXISTING WETLAND LINE (TYP.)
PHASE LINE (TYP.)
PROPERTY LINE (TYP.)
WALL EASEMENT
TEMP. 30' WIDE ACCESS ESMT.
TEMP. 20' WIDE EMERGENCY STABILIZED ACCESS
TOWN WEST BOULEVARD
TRACT E
EXISTING POND 7
LIGHT POLE (TYP.) (DESIGNED/ PERMITTED BY OTHERS)
TRACT C (PARK)
TRACT A
STREET "A"
TRACT B
36' WIDE DRAIN. ESMT.
25' WIDE DRAIN. ESMT.
SEE SHT. No. 17A FOR WEST TOWN BLVD. TURN LANE
STREET "C"
STREET "B"
12' UTILITY ESMT.
PHASE 2B
TRACT D
36' WIDE DRAIN. ESMT.
EXISTING POND 11
LIGHT POLE (TYP.) (DESIGNED/ PERMITTED BY OTHERS)
STREET "B"
NOTE: TOWN WEST BLVD. R/W LANDSCAPE BUFFER TO BE 10' WIDE.
PHASE LINE (TYP.)
25' WIDE DRAIN. ESMT.
25' WIDE DRAIN. & UTIL. ESMT.
PHASE 2A

NOTES:
1. CONTRACTOR TO PROTECT AND PREVENT ANY DISTURBANCE, SILTATION, ETC. TO THE WETLANDS. NO CONSTRUCTION WILL BE ALLOWED WITHIN THE WETLANDS AS AREAS TO REMAIN NATURAL.
2. REFER TO LANDSCAPE PLANS FOR TRACT C SITE LAYOUT.

NOTE: USE PLAT FOR ALL CONSTRUCTION LAYOUT WORK.

Dewberry

Dewberry Engineers Inc.
800 NORTH MAGNOLIA AVE
ORLANDO, FL 32803
SUITE 1000
PHONE: 407.843.5120
ENGINEERING BUSINESS -8794

WESTPORT RESERVE (PHASE 2B)

PORT ORANGE, FL

SEAL

Danielle Van De Loo
FL PE # 74676
7/1/2016

SCALE 0' 60' 120'
NORTH
SCALE: 1"=60'

No.	DATE	BY	Description
3	7-1-16	TFS	REV PER CITY COMMENTS
2	4-21-16	KJK	REV PER CITY COMMENTS

REVISIONS

DRAWN BY	TFS
APPROVED BY	DMV
CHECKED BY	NPS
DATE	JANUARY 2016
DATUM	NAVD 88

TITLE

SITE PLAN

PROJECT NO. 50079046 (CC 1)

SHEET NO.

C08

...\CC1-SF PH1 SitePlan.dgn 3:48:35 PM

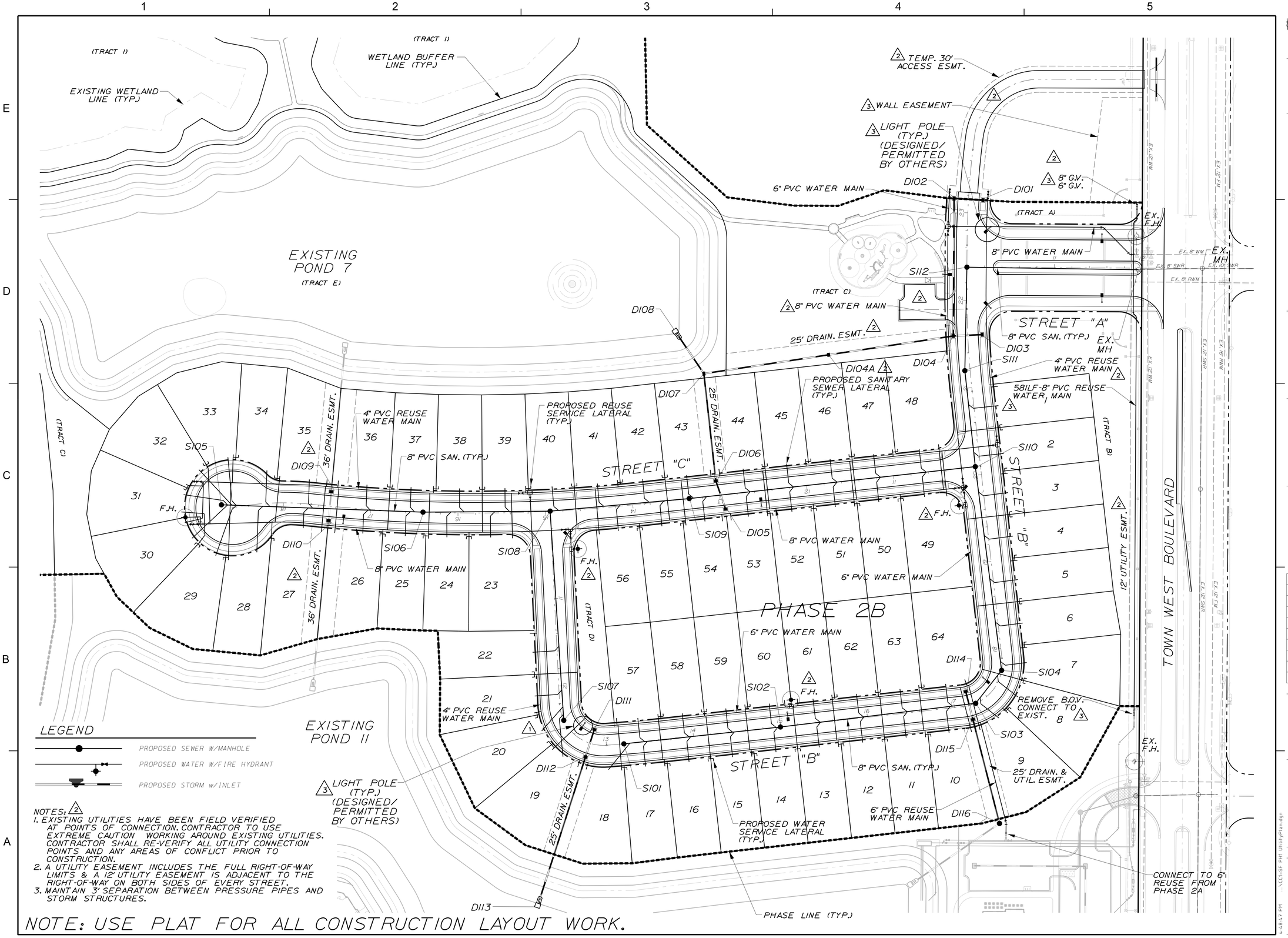

Dewberry

Dewberry Engineers Inc.
800 NORTH MAGNOLIA AVE
ORLANDO, FL 32803
SUITE 1000
PHONE: 407.843.5120
ENGINEERING BUSINESS -8794

WESTPORT RESERVE (PHASE 2B)

PORT ORANGE, FL

SEAL

Danielle Van De Loo
FL PE # 74676
7/1/2016

SCALE 0' 50' 100'
SCALE: 1"=50'
NORTH

No.	DATE	BY	Description
3	7-1-16	TFS	REV PER CITY COMMENTS
2	4-21-16	KJK	REV PER CITY COMMENTS
1	3-16-16	TFS	REV PER COMMENTS

REVISIONS

DRAWN BY	TFS
APPROVED BY	DMV
CHECKED BY	NPS
DATE	JANUARY 2016
DATUM	NAVD 88

TITLE

UTILITY PLAN

PROJECT NO. 50079046 (CC 1)

C09

SHEET NO.

4:48:47 PM \\CCI-SF PH1 UtilityPlan.dgn

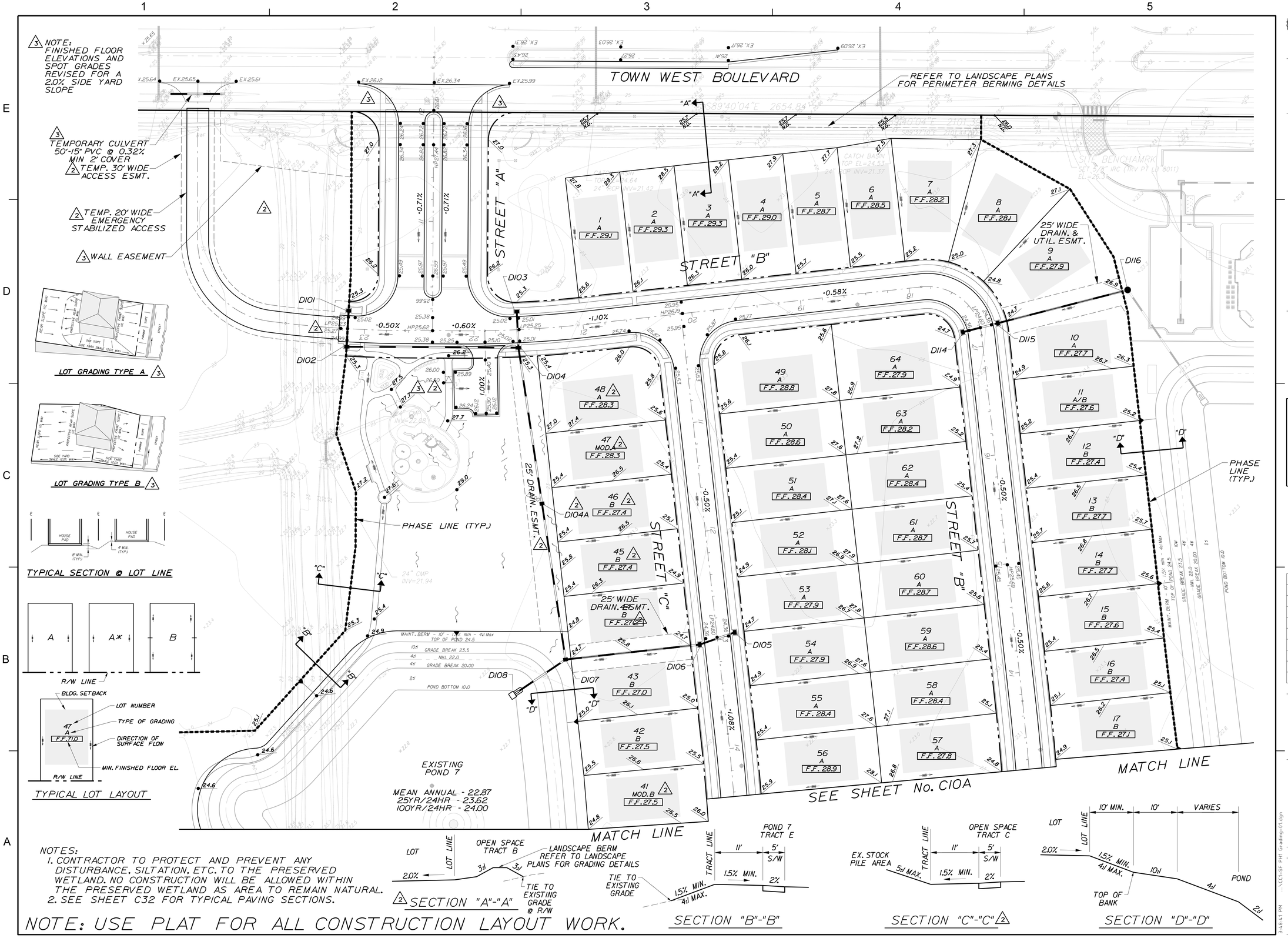

NOTES:
1. CONTRACTOR TO PROTECT AND PREVENT ANY DISTURBANCE, SILTATION, ETC. TO THE PRESERVED WETLAND. NO CONSTRUCTION WILL BE ALLOWED WITHIN THE PRESERVED WETLAND AS AREA TO REMAIN NATURAL.
2. SEE SHEET C32 FOR TYPICAL PAVING SECTIONS.

NOTE: USE PLAT FOR ALL CONSTRUCTION LAYOUT WORK.

Dewberry

Dewberry Engineers Inc.
800 NORTH MAGNOLIA AVE
ORLANDO, FL 32803
SUITE 1000
PHONE: 407.843.5120
ENGINEERING BUSINESS -8794

WESTPORT RESERVE (PHASE 2B)

PORT ORANGE, FL

SEAL

Danielle Van De Loo
FL PE # 74676
7/1/2016

KEY PLAN

SCALE 0' 40' 80'
NORTH
SCALE: 1"=40'

No.	DATE	BY	Description
3	7-1-16	TFS	REV PER CITY COMMENTS
2	4-21-16	KJK	REV PER CITY COMMENTS

REVISIONS

DRAWN BY	TFS
APPROVED BY	DMV
CHECKED BY	NPS
DATE	JANUARY 2016
DATUM	NAVD 88

TITLE

LOT & BLOCK GRADING PLAN

PROJECT NO. 50079046 (CC 1)

SHEET NO.

C10

...\CC1-SF PH1 Grading-01.dgn 3:48:41 PM

NOTES:
1. CONTRACTOR TO PROTECT AND PREVENT ANY DISTURBANCE, SILTATION, ETC. TO THE PRESERVED WETLAND. NO CONSTRUCTION WILL BE ALLOWED WITHIN THE PRESERVED WETLAND AS AREA TO REMAIN NATURAL.
2. SEE SHEET C32 FOR TYPICAL PAVING SECTIONS.

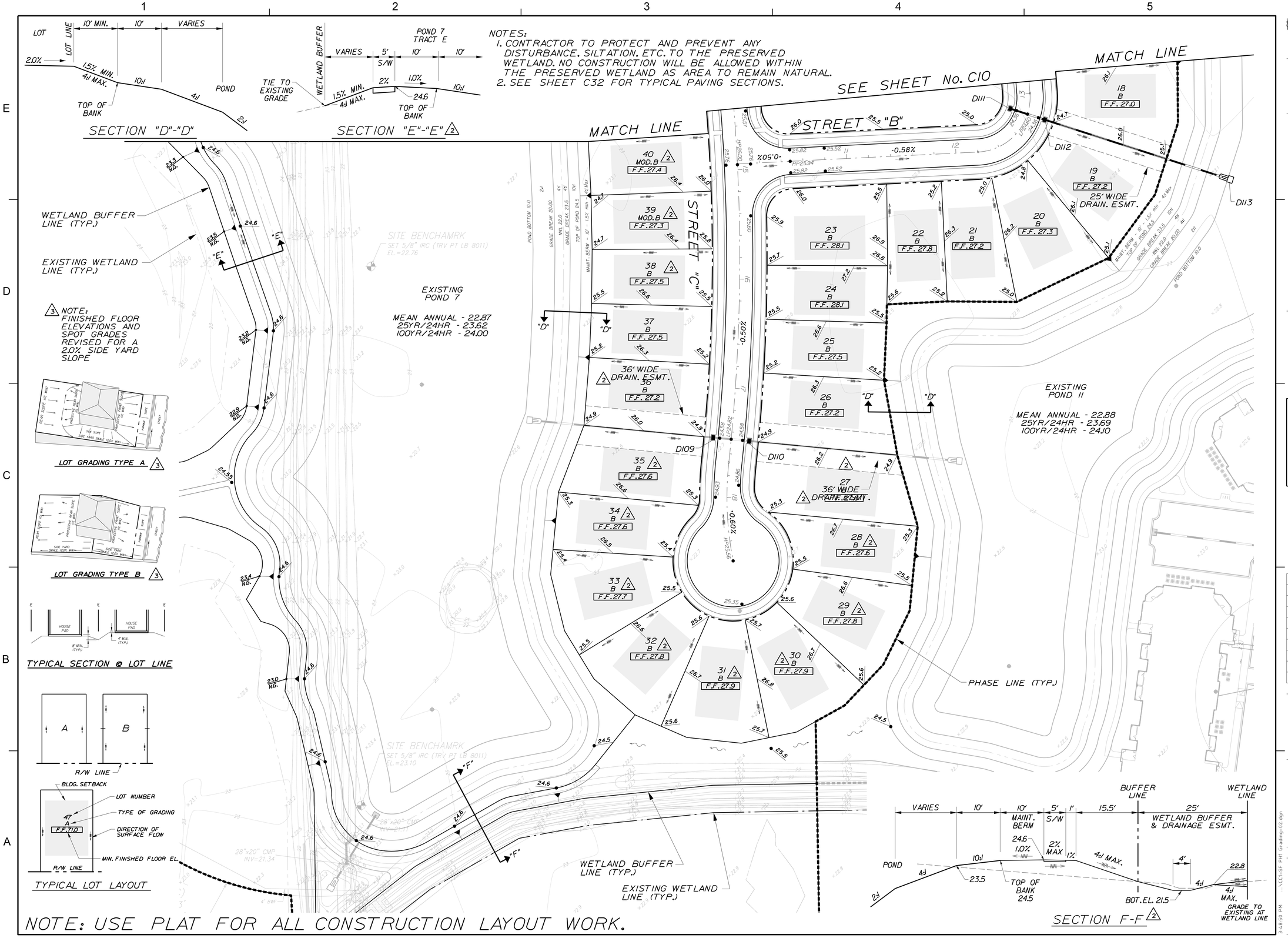

NOTE: USE PLAT FOR ALL CONSTRUCTION LAYOUT WORK.

Dewberry

Dewberry Engineers Inc.
800 NORTH MAGNOLIA AVE
ORLANDO, FL 32803
SUITE 1000
PHONE: 407.843.5120
ENGINEERING BUSINESS -8794

WESTPORT RESERVE (PHASE 2B)

PORT ORANGE, FL

SEAL

Danielle Van De Loo
FL PE # 74676
7/1/2016

KEY PLAN

SCALE 0' 40' 80'
SCALE: 1"=40'
NORTH

No.	DATE	BY	Description
3	7-1-16	TFS	REV PER CITY COMMENTS
2	4-21-16	KJK	REV PER CITY COMMENTS

REVISIONS

DRAWN BY	TFS
APPROVED BY	DMV
CHECKED BY	NPS
DATE	JANUARY 2016
DATUM	NAVD 88

TITLE

LOT & BLOCK GRADING PLAN

PROJECT NO. 50079046 (CC 1)

SHEET NO.

C11

...\CC1-SF PH1 Grading-02.dgn 3:48:50 PM

TEMP. SILT FENCE (TYP.)

STABILIZED EMERGENCY ACCESS

EXISTING SWALES TO REMAIN

(SHADED)
EXIST. STOCKPILE AREA GRADE CONTRACTOR TO MAINTAIN EXISTING DRAINAGE PATTERNS. SLOPES NOT TO EXCEED 5:1

WETLAND BUFFER LINE (TYP.)

MIN. 25' WETLAND BUFFER (TYP.)

TEMP. DOUBLE SILT FENCE (TYP.)

EXISTING WETLAND LINE (TYP.)

TEMP. SILT FENCE (TYP.)

NOTE: USE PLAT FOR ALL CONSTRUCTION LAYOUT WORK.

Dewberry

Dewberry Engineers Inc.
800 NORTH MAGNOLIA AVE
ORLANDO, FL 32803
SUITE 1000
PHONE: 407.843.5120
ENGINEERING BUSINESS -8794

WESTPORT RESERVE (PHASE 2B)

PORT ORANGE, FL

SEAL

Danielle Van De Loo
FL PE # 74676
7/1/2016

KEY PLAN

SCALE 0' 40' 80'
SCALE: 1"=40'

NORTH

No.	DATE	BY	Description
2	4-21-16	KJK	REV PER CITY COMMENTS

REVISIONS

DRAWN BY	TFS
APPROVED BY	DMV
CHECKED BY	NPS
DATE	JANUARY 2016
DATUM	NAVD 88

TITLE

MASS GRADING PLAN

PROJECT NO. 50079046 (CC 1)

C12

SHEET NO.

3/4/9:05 PM ...\CC1-SF PH1 MassGrading.dgn

NOTE: USE PLAT FOR ALL CONSTRUCTION LAYOUT WORK.

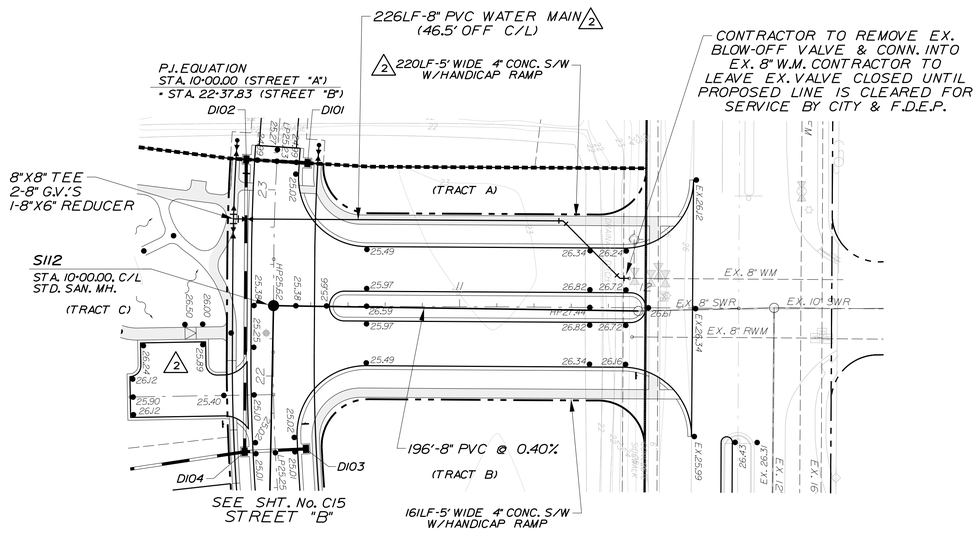

STREET "A"

NOTE: PAVEMENT 24' WIDE W/35' RADII.

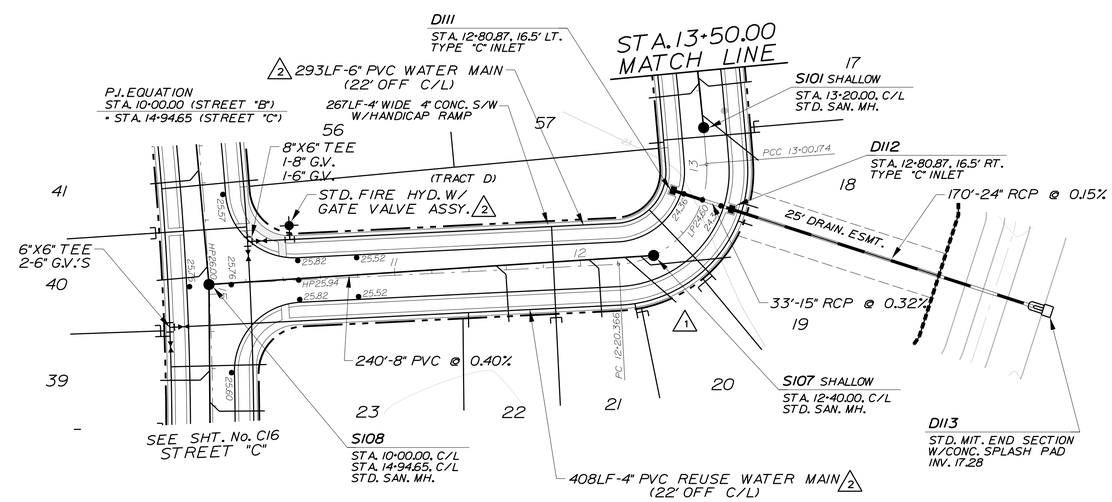

STREET "B"

NOTE: PAVEMENT 20' WIDE W/35' RADII.

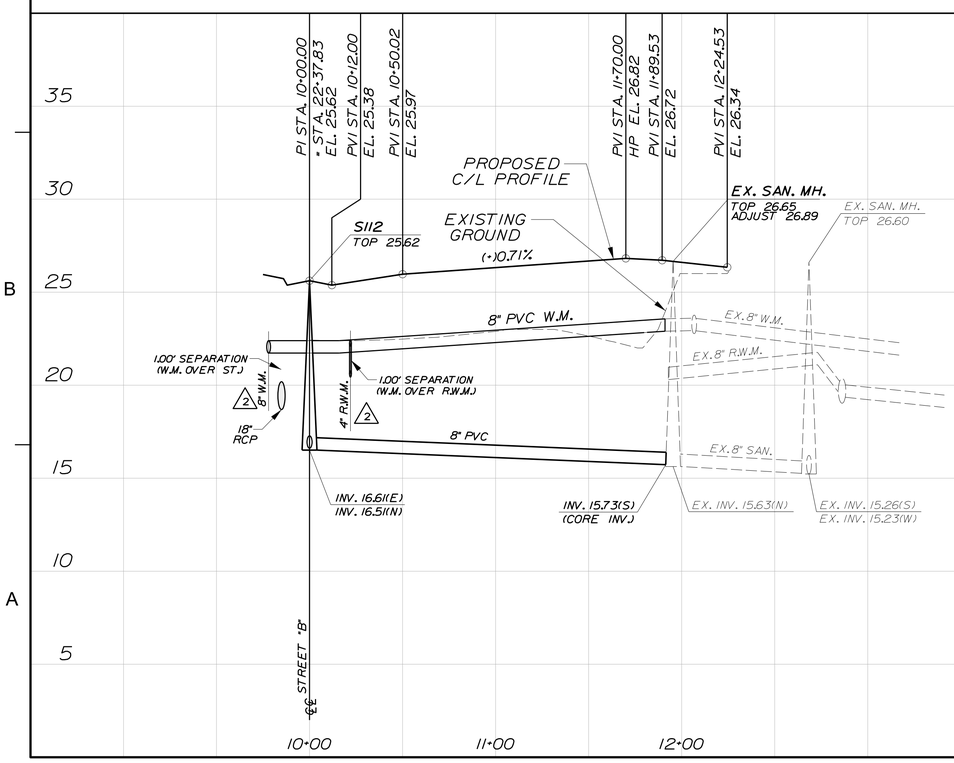

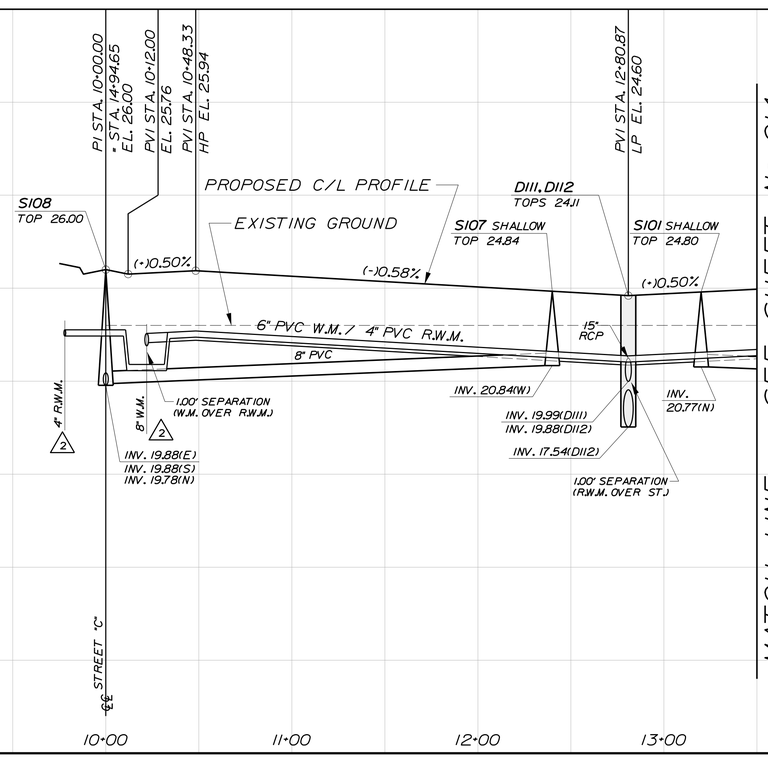

MATCH LINE SEE SHEET No. C14

Dewberry

Dewberry Engineers Inc.
800 NORTH MAGNOLIA AVE
ORLANDO, FL 32803
SUITE 1000
PHONE: 407.843.5120
ENGINEERING BUSINESS -8794

WESTPORT RESERVE (PHASE 2B)

PORT ORANGE, FL

SEAL

Danielle Van De Loo
FL PE # 74676
7/1/2016

KEY PLAN

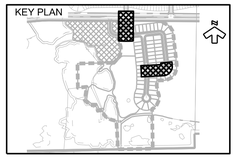

SCALE 0' 40' 80'

NORTH

PROFILE SCALE:
1"=40' HORZ.
1"=4' VERT.

No.	DATE	BY	Description
2	4-21-16	KJK	REV PER CITY COMMENTS
1	3-16-16	TFS	REV PER COMMENTS

REVISIONS

DRAWN BY	TFS
APPROVED BY	DMV
CHECKED BY	NPS
DATE	JANUARY 2016
DATUM	NAVD 88

TITLE

PLAN & PROFILE STREETS "A" & "B"

PROJECT NO. 50079046 (CC 1)

C13

SHEET NO.

3:49:19 PM ...\CC1-SF PH1 PlanProfile-01.dgn

NOTE: USE PLAT FOR ALL CONSTRUCTION LAYOUT WORK.

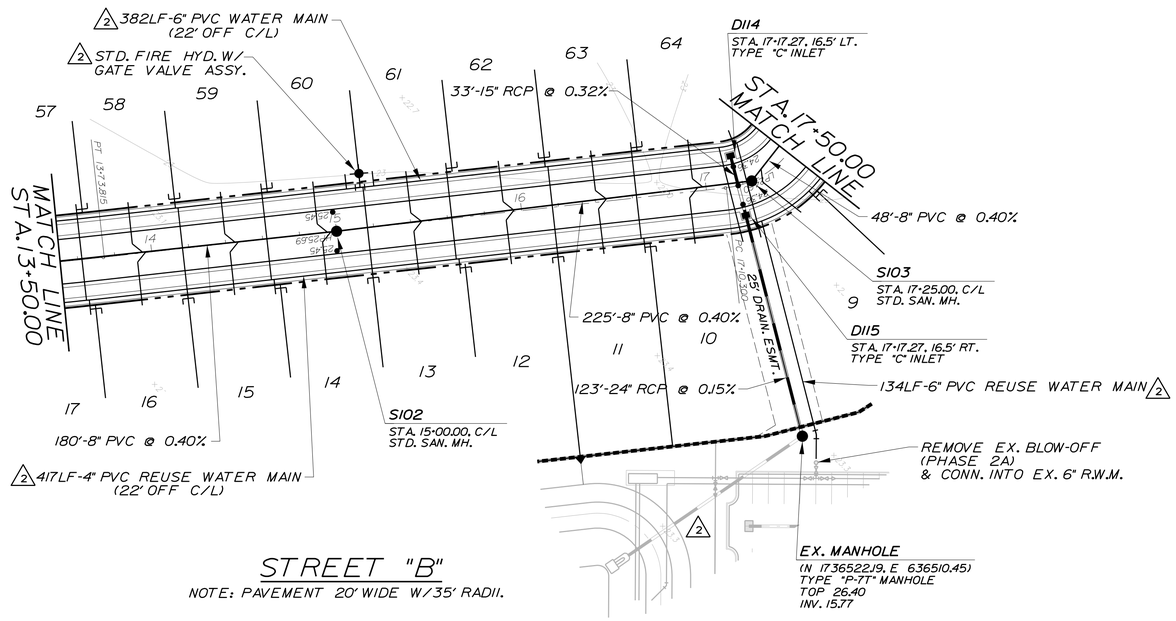

STREET "B"

NOTE: PAVEMENT 20' WIDE W/35' RADII.

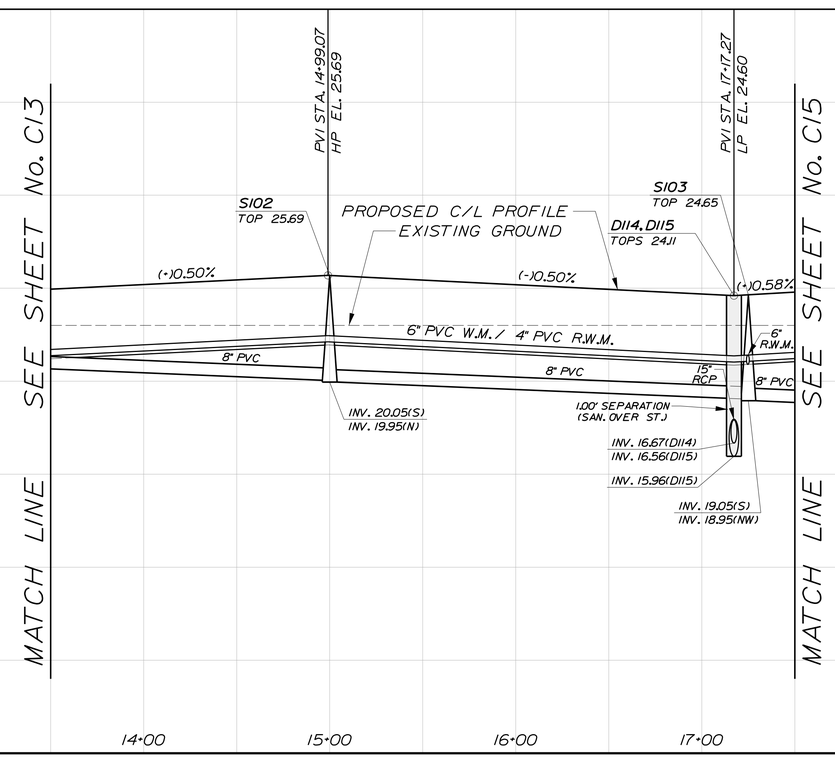

Dewberry

Dewberry Engineers Inc.
800 NORTH MAGNOLIA AVE
ORLANDO, FL 32803
SUITE 1000
PHONE: 407.843.5120
ENGINEERING BUSINESS -8794

WESTPORT RESERVE (PHASE 2B)

PORT ORANGE, FL

SEAL

Danielle Van De Loo
FL PE # 74676
7/1/2016

KEY PLAN

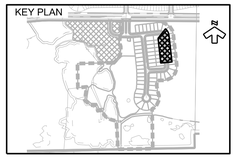

SCALE 0' 40' 80'

NORTH

PROFILE SCALE: 1"=40' HORZ. 1"=4' VERT.

No.	DATE	BY	Description
2	4-21-16	KJK	REV PER CITY COMMENTS

REVISIONS

DRAWN BY	TFS
APPROVED BY	DMV
CHECKED BY	NPS
DATE	JANUARY 2016
DATUM	NAVD 88

TITLE

PLAN & PROFILE STREET "B"

PROJECT NO. 50079046 (CC 1)

C14

SHEET NO.

...\CC1-SF PH1 PlanProfile-02.dgn 3:49:22 PM

NOTE: USE PLAT FOR ALL CONSTRUCTION LAYOUT WORK.

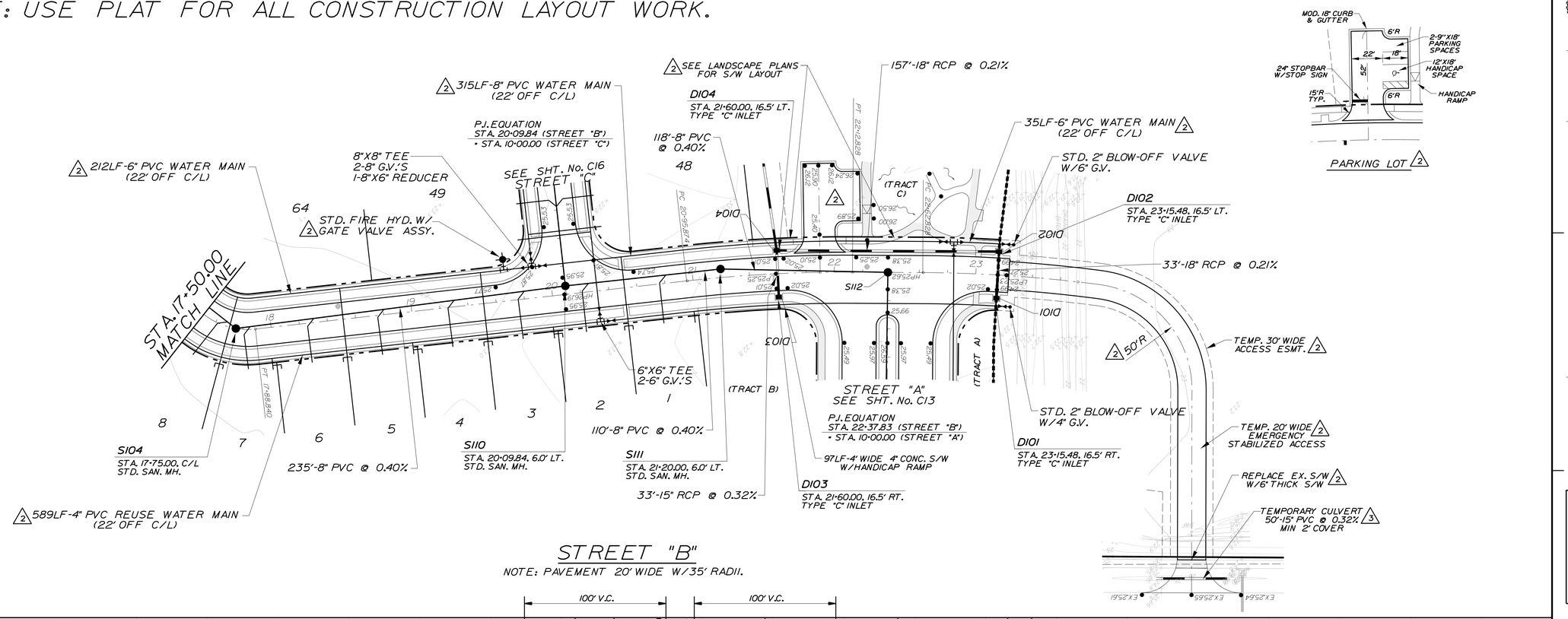

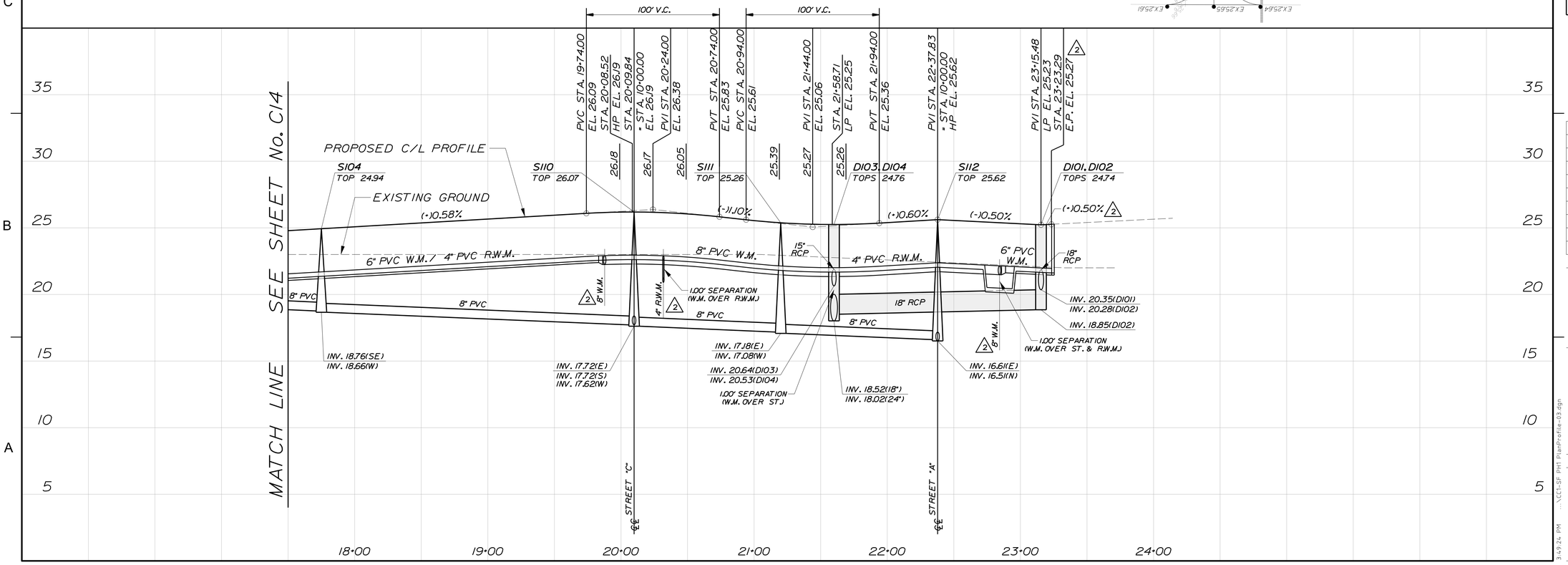

Dewberry

Dewberry Engineers Inc.
800 NORTH MAGNOLIA AVE
ORLANDO, FL 32803
SUITE 1000
PHONE: 407.843.5120
ENGINEERING BUSINESS -8794

WESTPORT RESERVE (PHASE 2B)

PORT ORANGE, FL

SEAL

Danielle Van De Loo
FL PE # 74676
7/1/2016

KEY PLAN

SCALE 0' 40' 80'

NORTH

PROFILE SCALE: 1"=40' HORZ. 1"=4' VERT.

N

No.	DATE	BY	Description
3	7-1-16	TFS	REV PER CITY COMMENTS
2	4-21-16	KJK	REV PER CITY COMMENTS

REVISIONS

DRAWN BY	TFS
APPROVED BY	DMV
CHECKED BY	NPS
DATE	JANUARY 2016
DATUM	NAVD 88

TITLE

PLAN & PROFILE STREET "B"

PROJECT NO. 50079046 (CC 1)

C15

SHEET NO.

3:49:24, PM ...\CC1-SF PH1 PlanProfile-03.dgn

NOTE: USE PLAT FOR ALL CONSTRUCTION LAYOUT WORK.

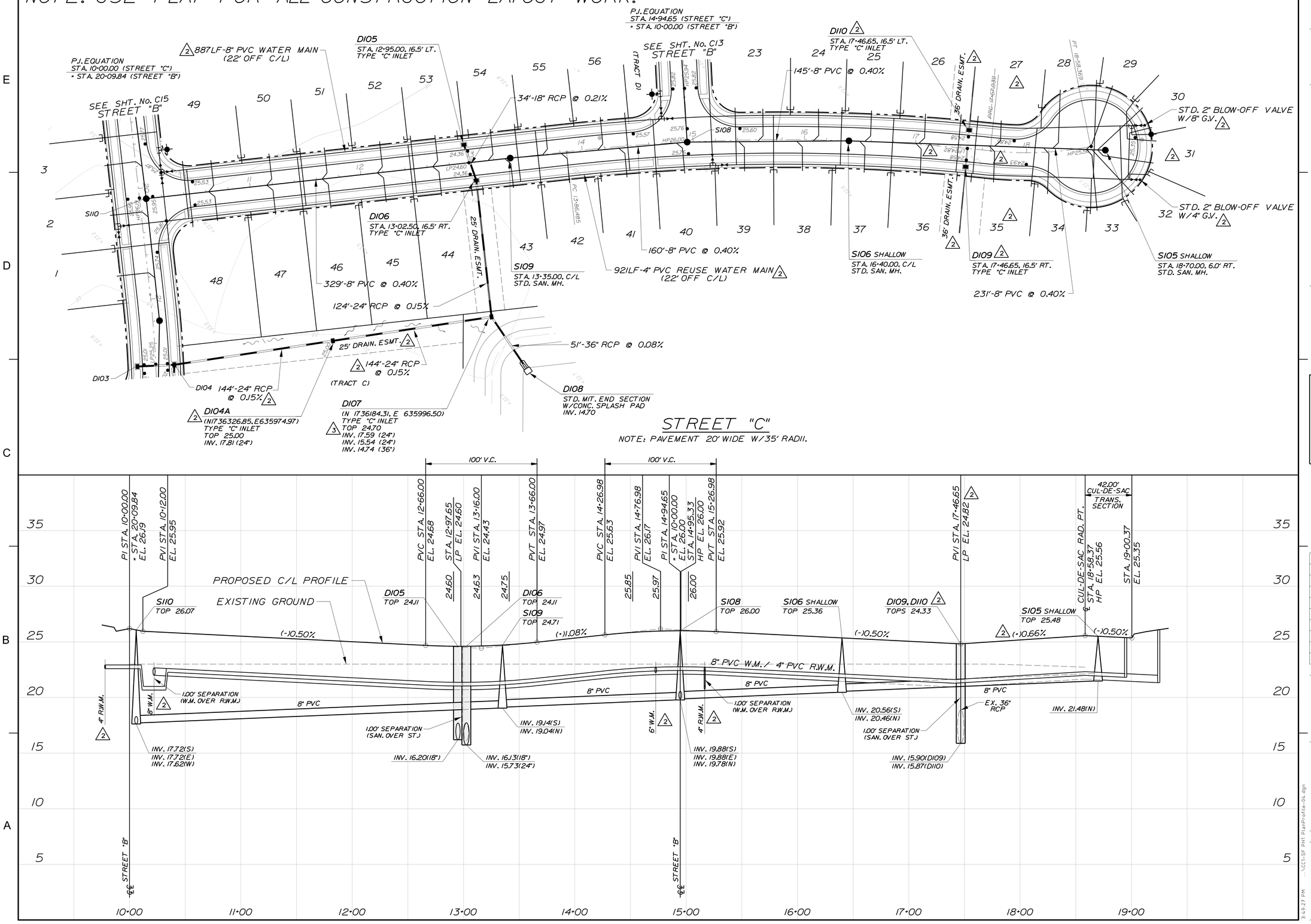

Dewberry

Dewberry Engineers Inc.
800 NORTH MAGNOLIA AVE
ORLANDO, FL 32803
SUITE 1000
PHONE: 407.843.5120
ENGINEERING BUSINESS -8794

WESTPORT RESERVE (PHASE 2B)

PORT ORANGE, FL

SEAL

Danielle Van De Loo
FL PE # 74676
7/1/2016

KEY PLAN

SCALE 0' 40' 80'

NORTH

PROFILE SCALE:
1"=40' HORZ.
1"=4' VERT.

No.	DATE	BY	Description
3	7-1-16	TFS	REV PER CITY COMMENTS
2	4-21-16	KJK	REV PER CITY COMMENTS

REVISIONS

DRAWN BY	TFS
APPROVED BY	DMV
CHECKED BY	NPS
DATE	JANUARY 2016
DATUM	NAVD 88

TITLE

PLAN & PROFILE STREET "C"

PROJECT NO. 50079046 (CC 1)

SHEET NO.

C16

...\CC1-SF PH1 PlanProfile-04.dgn 3:49:27 PM

TYPICAL STOP SIGN

(UNLESS OTHERWISE SPECIFIED)

STOP & STREET SIGN DETAIL

TYPICAL TRAFFIC CONTROL SIGN

STRIPING NOTES:

1. ALL PAVEMENT MARKINGS SHALL BE THERMOPLASTIC WITH RPM'S AND WILL BE INSTALLED IN ACCORDANCE WITH FDOT STANDARD INDEX #17346.

2. FOR SIGN DETAILS, REFER TO THE "STANDARD HIGHWAY SIGNS" PUBLISHED BY THE U.S. DEPARTMENT OF TRANSPORTATION, FEDERAL HIGHWAY ADMINISTRATION, 2004, THE MANUAL ON UNIFORM TRAFFIC CONTROL DEVICES (MUTCD), 2003, AND THE FDOT DESIGN STANDARDS (LATEST EDITION).

3. PAVEMENT MARKINGS SHOULD BE PLACED AS SHOWN IN THE PLANS AND AS DESCRIBED WITHIN THE APPROPRIATE TRAFFIC DESIGN STANDARD INDEX (LATEST EDITION).

SIGNING & STRIPING DETAILS

NOTE: 3
PEDESTRIAN CROSSING SIGNS TO BE PLACED 275' IN ADVANCE OF SIDEWALK CROSSING ACROSS TOWN WEST BLVD.

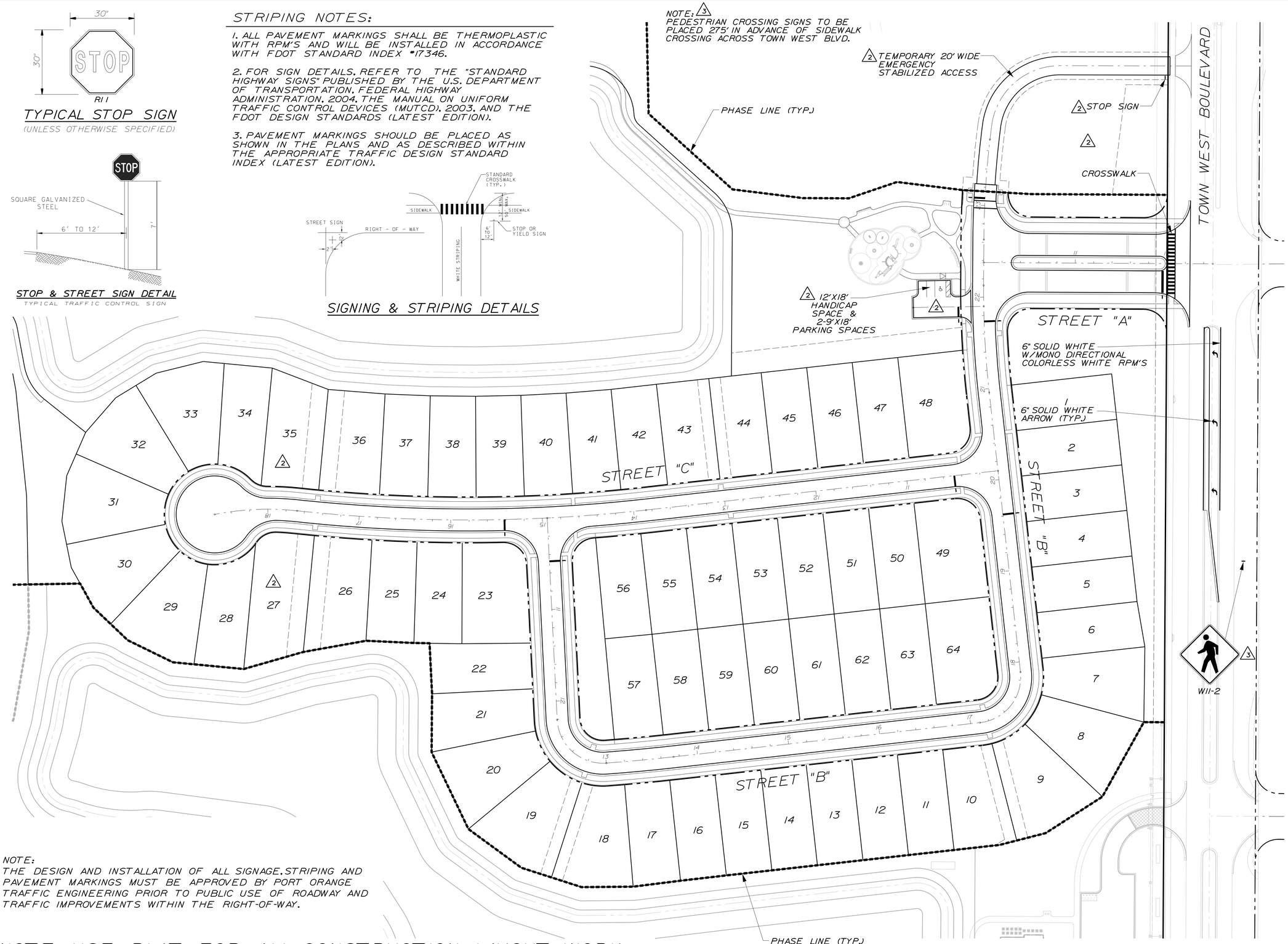

NOTE:
THE DESIGN AND INSTALLATION OF ALL SIGNAGE, STRIPING AND PAVEMENT MARKINGS MUST BE APPROVED BY PORT ORANGE TRAFFIC ENGINEERING PRIOR TO PUBLIC USE OF ROADWAY AND TRAFFIC IMPROVEMENTS WITHIN THE RIGHT-OF-WAY.

NOTE: USE PLAT FOR ALL CONSTRUCTION LAYOUT WORK.

Dewberry

Dewberry Engineers Inc.
800 NORTH MAGNOLIA AVE
ORLANDO, FL 32803
SUITE 1000
PHONE: 407.843.5120
ENGINEERING BUSINESS -8794

WESTPORT RESERVE (PHASE 2B)

PORT ORANGE, FL

SEAL

Danielle Van De Loo
FL PE # 74676
7/1/2016

SCALE
0' 50' 100'
SCALE: 1"=50'
NORTH

No.	DATE	BY	Description
3	7-1-16	TFS	REV PER CITY COMMENTS
2	4-21-16	KJK	REV PER CITY COMMENTS

REVISIONS

DRAWN BY	TFS
APPROVED BY	DMV
CHECKED BY	NPS
DATE	JANUARY 2016
DATUM	NAVD 88

TITLE

STRIPING PLAN

PROJECT NO. 50079046 (CC 1)

C17

SHEET NO.

...\CC1-SF PH1 Striping.dgn 3:49:37 PM

NOTE: (3)
PEDESTRIAN CROSSING SIGNS TO BE PLACED 275' IN ADVANCE OF SIDEWALK CROSSING ACROSS TOWN WEST BLVD.

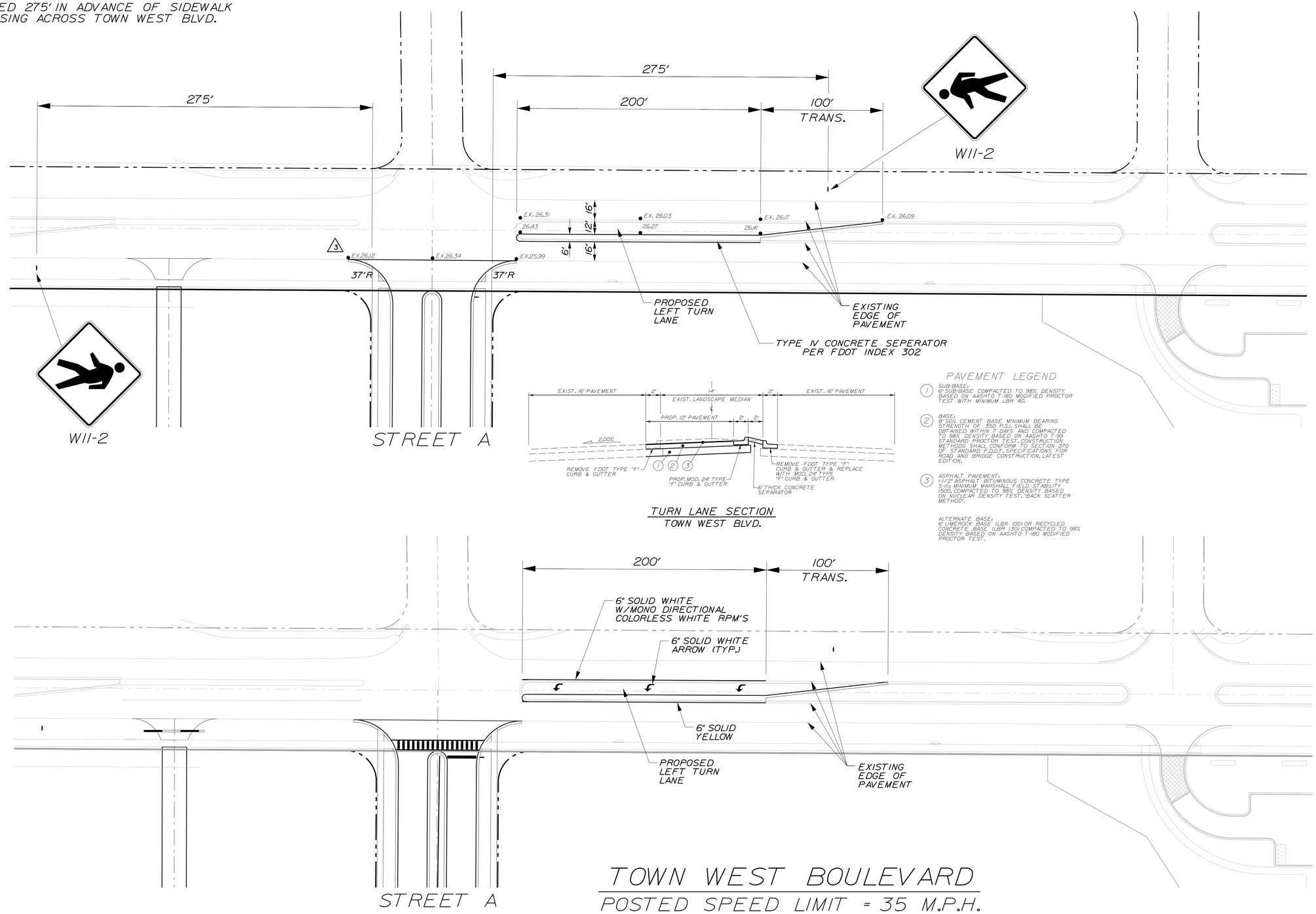

TURN LANE SECTION
TOWN WEST BLVD.

PAVEMENT LEGEND

(1) SUB-BASE:
6" SUB-BASE COMPACTED TO 98% DENSITY BASED ON AASHTO T-180 MODIFIED PROCTOR TEST WITH MINIMUM LBR 40.

(2) BASE:
8" SOIL CEMENT BASE MINIMUM BEARING STRENGTH OF 350 P.S.I. SHALL BE OBTAINED WITHIN 7 DAYS AND COMPACTED TO 98% DENSITY BASED ON AASHTO T-99 STANDARD PROCTOR TEST. CONSTRUCTION METHODS SHALL CONFORM TO SECTION 270 OF STANDARD F.D.O.T. SPECIFICATIONS FOR ROAD AND BRIDGE CONSTRUCTION, LATEST EDITION.

(3) ASPHALT PAVEMENT:
1-1/2" ASPHALT BITUMINOUS CONCRETE TYPE S-III, MINIMUM MARSHALL FIELD STABILITY 1500, COMPACTED TO 98% DENSITY BASED ON NUCLEAR DENSITY TEST. "BACK SCATTER METHOD".

ALTERNATE BASE:
6" LIMEROCK BASE (LBR 100) OR RECYCLED CONCRETE BASE (LBR 150) COMPACTED TO 98% DENSITY BASED ON AASHTO T-180 MODIFIED PROCTOR TEST.

TOWN WEST BOULEVARD
POSTED SPEED LIMIT = 35 M.P.H.

NOTE: USE PLAT FOR ALL CONSTRUCTION LAYOUT WORK.

Dewberry

Dewberry Engineers Inc.
800 NORTH MAGNOLIA AVE
ORLANDO, FL 32803
SUITE 1000
PHONE: 407.843.5120
ENGINEERING BUSINESS -8794

WESTPORT RESERVE (PHASE 2B)

PORT ORANGE, FL

SEAL

Danielle Van De Loo
FL PE # 74676
7/1/2016

SCALE 0' 40' 80' NORTH
SCALE: 1"=40'
N

No.	DATE	BY	Description
3	7-1-16	TFS	REV PER CITY COMMENTS
2	4-21-16	KJK	REV PER CITY COMMENTS

REVISIONS

DRAWN BY	TFS
APPROVED BY	DMV
CHECKED BY	NPS
DATE	JANUARY 2016
DATUM	NAVD 88

TITLE

TOWN WEST BOULEVARD TURN LANE

PROJECT NO. 50079046 (CC 1)

C17A (2)

SHEET NO.

...\CC1-SF PH1 Town West Blvd.dgn 3:49:38 PM

ROAD CLASSIFICATION	DESIGN SPEED (MPH)	LANE WIDTH (LW)	RIGHT OF WAY WIDTH	MIN. HORIZ. RADIUS C.L.	MIN. VERT. CURVE	MIN. LONG. GRADE (%)	MIN. INT. SPACE
LOCAL / COLLECTOR UP TO 400 VPD	15	10	50	50'	75'	0.3	150'
	20	10	50	95'	125'	0.3	200'
	25	11	50	180'	165'	0.3	250'
UP TO 1000 VPD	20	11	50	95'	125'	0.3	200'
	25	11	60	180'	165'	0.3	250'
UP TO 5000 VPD	30	12	80	300'	200'	0.3	330'
	35	12	80	375'	225'	0.5	660'
	40	12	80	450'	275'	0.5	660'
ARTERIAL UP TO 7500 VPD	35	5 LANES (3)		375'	225'	0.5	660'
	40			450'	275'	0.5	660'
OVER 7500 VPD	40			450'	275'	0.5	660'

NOTES:

1. ALL ROADWAY DESIGN SHALL MEET THE MINIMUM REQUIREMENTS OF THE MANUAL OF UNIFORM MINIMUM STANDARDS FOR DESIGN, CONSTRUCTION, AND MAINTENANCE FOR STREETS AND HIGHWAYS (LATEST EDITION), AS PUBLISHED BY THE FLORIDA DEPARTMENT OF TRANSPORTATION.
2. PAVEMENT WIDTHS FOR INDUSTRIAL AND COMMERCIAL ROADS SHALL BE INCREASED BY A MINIMUM OF ONE (1) FOOT.
3. AS A RULE, ALL INTERSECTIONS SHALL BE DESIGNED AT 90 DEGREE ANGLES. DEVIATION FROM THIS SHALL BE CONSIDERED STRICTLY ON A CASE BY CASE BASIS. IN THE EVENT THAT ANY DEVIATION IS PERMITTED, THEN IN NO CASE SHALL INTERSECTION ANGLES BE LESS THAN 75 DEGREES FOR INTERSECTIONS WITH ARTERIAL ROADWAYS EXCEPT ON LOCAL AND COLLECTOR ROADWAYS WHICH SHALL NOT BE LESS THAN 60 DEGREES. INTERSECTIONS WITH COUNTY AND STATE ROADS SHALL BE 90 DEGREES.
4. ALL INTERSECTIONS AND ACCESS POINTS SHALL HAVE ADEQUATE LINE OF SIGHT BASED ON AN EYE LEVEL OF 3.5' ABOVE THE GROUND AND AN OBJECT 3.0' ABOVE THE LOWEST ROADWAY. FOR PURPOSES OF THIS STANDARD, THE EYE LEVEL SHALL BE MEASURED 8' IN BACK OF THE STOP BAR AT ENTRANCES. THE FOLLOWING SIGHT DISTANCES SHALL BE PROVIDED:

DESIGN SPEED (MPH)	20	25	30	35	40	45	50	55
SIGHT DISTANCE (FT) (MINIMUM)	200	250	300	350	400	450	500	550

LEGEND:

C.L. CENTER-LINE
INT. INTERSECTION
LONG. LONGITUDINAL

STANDARD CONSTRUCTION DETAIL
ROADWAY GEOMETRY
REV. 12/08
FILE NAME: R6.DWG
DETAIL REF: R-6

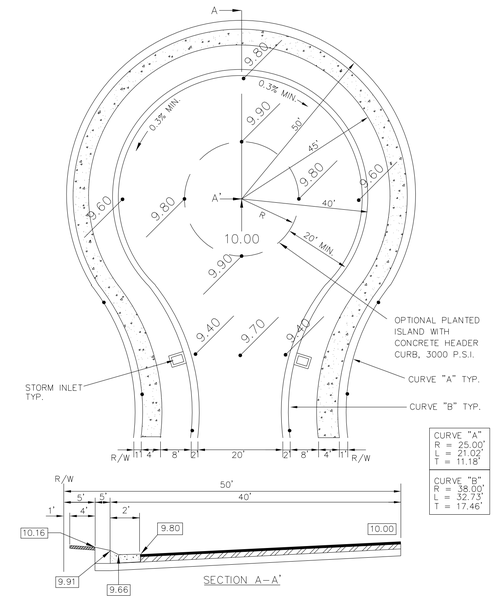

CURVE "A"
R = 25.00'
L = 21.02'
T = 11.18'

CURVE "B"
R = 38.00'
L = 32.73'
T = 17.46'

STANDARD CONSTRUCTION DETAIL
STANDARD CUL-DE-SAC DETAIL
WITH DUAL STORM INLET
"PREFERRED"
REV. 12/08
FILE NAME: R8.DWG
DETAIL REF: R-8

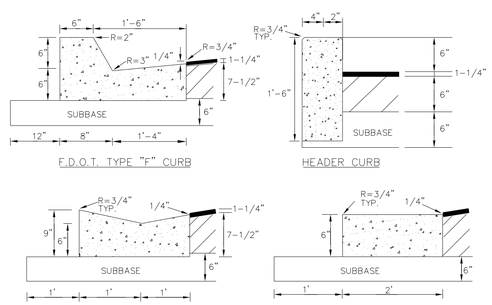

NOTES:

1. ALL CURBS TO BE CONSTRUCTED OF 28 DAY, 3000 P.S.I. CONCRETE
2. 1/2" PRE-MOLDED EXPANSION JOINT REQUIRED EVERY 500', CONSTRUCTION JOINT REQUIRED EVERY 10' MAXIMUM (4' MINIMUM).
3. 1/2" PRE-MOLDED EXPANSION JOINT REQUIRED AT EACH SIDE OF ALL STORM INLET STRUCTURES AND AT ALL RADIUS POINTS.
4. 6" SUBBASE TO BE COMPACTED AND TESTED TO 98% DENSITY BASED ON AASHTO T-180 MODIFIED PROCTOR TEST AND SHALL BE STABILIZED TO A MINIMUM L.B.R. 40.
5. EXPANSION JOINT MATERIAL MUST COVER THE ENTIRE CROSS SECTION OF CURB.
6. IN NO INSTANCE SHALL EXTRUDED CURBS (DEFINED AS HEADER-TYPE CURBS INSTALLED DIRECTLY ON TOP OF PAVEMENT) BE PERMITTED.
7. ALL ASPHALT AND/OR PAVER DRIVEWAY APRONS LOCATED IN PUBLIC RIGHTS-OF-WAY, SHALL INCLUDE CURBING.

STANDARD CONSTRUCTION DETAIL
STANDARD CURB CONSTRUCTION
REV. 12/08
FILE NAME: R9.DWG
DETAIL REF: R-9

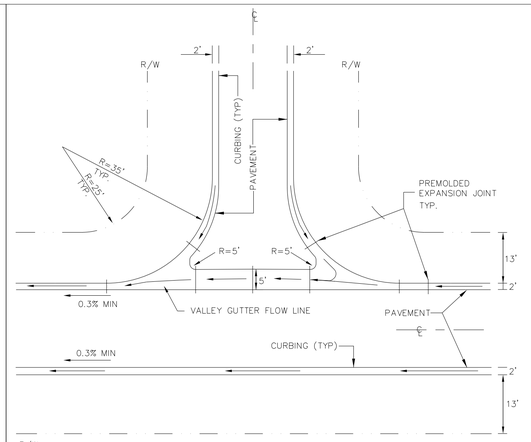

NOTES:

1. VALLEY GUTTER TO HAVE A STANDARD MINIMUM LONGITUDINAL SLOPE OF 0.30%
2. VALLEY GUTTER TO BE CONSTRUCTED OF 28 DAY, 3000 P.S.I. CONCRETE
3. 6" SUBBASE TO BE COMPACTED AND TESTED TO 98% DENSITY WITH MINIMUM L.B.R. 40 BASED ON AASHTO T-180 MODIFIED PROCTOR TEST.
4. VALLEY GUTTERS ARE REQUIRED WHEN STORMWATER CROSSES THE INTERSECTION OF ROADWAYS AND DRIVEWAY CONNECTIONS.
5. REFER TO F.D.O.T. STANDARD INDEX No. 300

STANDARD CONSTRUCTION DETAIL
ROADWAY INTERSECTION VALLEY GUTTER
REV. 12/08
FILE NAME: R10.DWG
DETAIL REF: R-10

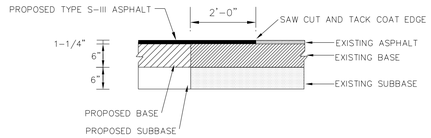

STANDARD CONSTRUCTION DETAIL
PAVEMENT BUTT JOINT
REV. 12/08
FILE NAME: R11.DWG
DETAIL REF: R-11

Dewberry
Dewberry Engineers Inc.
800 NORTH MAGNOLIA AVE
ORLANDO, FL 32803
SUITE 1000
PHONE: 407.843.5120
ENGINEERING BUSINESS -8794

WESTPORT RESERVE
(PHASE 2B)

PORT ORANGE, FL

SEAL

7/1/2016

No.	DATE	BY	Description

REVISIONS

DRAWN BY TFS
APPROVED BY DMV
CHECKED BY NPS
DATE JANUARY 2016
DATUM NAVD 88

TITLE

CITY ROAD/ DRAINAGE DETAILS

PROJECT NO. 50079046 (CC 1)

C18

SHEET NO.

3:49:42 PM ...\CC1-SF PH1 CityRoadDetails-01.dgn

ROADWAY AND PARKING AREA DESIGN AND CONSTRUCTION NOTES

ALL MATERIALS AND INSTALLATION METHODS USED FOR LAND DEVELOPMENT CODE REQUIRED IMPROVEMENTS FOR SUBDIVISIONS AND SITE PLANS SHALL BE IN CONFORMANCE WITH THE CITY, FDOT STANDARD SPECIFICATIONS FOR ROAD AND BRIDGE CONSTRUCTION (LATEST EDITION), AND THE FDOT ROADWAY AND TRAFFIC DESIGN STANDARDS (LATEST EDITION).

1. ALL RIGHT-OF-WAY OTHER THAN ROADWAY AREAS SHALL BE GRASSED AND MULCHED OR SODDED. ALL SLOPES STEEPER THAN 6:1 SHALL REQUIRE SODDING. THE CITY RESERVES THE RIGHT TO REQUIRE SODDING IN SPECIAL AREAS WHERE EROSION IS A CONCERN.

2. THE FOLLOWING WILL BE THE STANDARD PROTECTION FOR DITCHES UNLESS DRAINAGE CALCULATIONS INDICATE OTHERWISE:

SWALE PROFILE GRADES	PROTECTION REQUIRED
0.2%- 1.0%	GRASSING AND MULCHING
1.0%-4.0%	SODDING
4.0% AND GREATER	DITCH PAVING

3. THE PAVEMENT, BASE, AND SUBBASE THICKNESS PRESENTED ON DETAILS REPRESENTS THE MINIMUM REQUIREMENTS FOR LOCAL PUBLIC STREETS AND PRIVATE PARKING LOTS. THE CITY RESERVES THE RIGHT AT IT'S DISCRETION TO INCREASE THESE REQUIREMENTS FOR COLLECTOR AND ARTERIAL ROADWAYS AND PRIVATE PARKING LOTS SUBJECTED TO HEAVY VEHICULAR COMMERCIAL TRAFFIC.

4. THE DEVELOPER SHALL PROVIDE AT THEIR OWN EXPENSE A CERTIFIED SOILS ENGINEERING LABORATORY TO PERFORM ALL FIELD AND LABORATORY TESTING REQUIRED TO VERIFY THAT THE CONSTRUCTION IS IN COMPLIANCE WITH THE CITY'S MINIMUM STANDARDS. IT IS THE RESPONSIBILITY OF THE DEVELOPER TO ENSURE THAT COPIES OF ALL TEST REPORTS ARE PROVIDED TO THE CITY'S DESIGNATED SITE INSPECTOR PRIOR TO THE PROJECT FINAL INSPECTION IN ORDER TO ALLOW PROJECT ACCEPTANCE BY THE CITY.

5. THE LIMITS OF STABILIZED SUBBASE SHALL EXTEND TO A DEPTH OF SIX INCHES (6") BELOW THE BOTTOM OF THE BASE AND OUTWARD TO TWELVE INCHES (12") BEYOND THE CURB.

6. THE STABILIZING MATERIAL, IF REQUIRED, SHOULD BE A HIGH BEARING VALUE SOIL, SAND-CLAY, LIMEROCK, RECYCLED CONCRETE, SHELL, OR OTHER MATERIAL AS APPROVED BY THE CITY'S DESIGNATED SITE INSPECTOR AND A LICENSED SOILS ENGINEER.

7. THE SUBBASE SHALL BE STABILIZED NOT LESS THAN FORTY (40) POUNDS LIMEROCK BEARING RATIO (LBR) TO A 6" MINIMUM DEPTH. A COMPACTION OF NO LESS THAN NINETY-EIGHT (98 %) PERCENT DENSITY BASED ON AASHTO T-180 SHALL BE REQUIRED.

8. FOR ROADWAYS, TESTS FOR SUBBASE BEARING CAPACITY AND COMPACTION SHALL BE DONE AT A MINIMUM OF EVERY 300 FEET AND SHALL BE STAGGERED TO THE LEFT, RIGHT, AND AT CENTER LINE OF THE ROADWAY. FOR SITE PLANS, TEST SHALL BE PERFORMED FOR EVERY 600 SQUARE YARDS OF STABILIZED AREA, OR PORTIONS THEREOF.

9. BASES FOR ALL STREETS SHALL HAVE A MINIMUM SIX INCH (6") DEPTH. SOIL CEMENT BASES SHALL HAVE A STRENGTH OF 350 POUNDS PER SQUARE INCH AT 7 DAYS COMPACTED TO 98% DENSITY PER AASHTO T-99 STANDARD PROCTOR TEST IN CONFORMANCE WITH SECTION 270 OF STANDARD F.D.O.T. SPECIFICATIONS FOR ROAD AND BRIDGE CONSTRUCTION (LATEST EDITION). RECYCLED CONCRETE OR LIMEROCK BASES SHALL BE COMPACTED TO 98% MAXIMUM DENSITY BASED ON AASHTO T-180 MODIFIED PROCTOR TEST.

STANDARD CONSTRUCTION DETAIL
ROADWAY AND PARKING AREA DESIGN AND CONSTRUCTION NOTES
REV. 12/08
FILE NAME: R12.DWG
DETAIL REF: R-12

ROADWAY AND PARKING AREA DESIGN AND CONSTRUCTION NOTES (CONTD.)

10. SOIL CEMENT AND RECYCLED CONCRETE MIX DESIGNS SHALL BE SUBMITTED BY A LICENSED SOILS ENGINEER TO THE CITY'S DESIGNATED SITE INSPECTOR PRIOR TO THE START OF SUBBASE PREPARATION. ALL MIX DESIGNS SHALL BE SUBJECT TO THE APPROVAL OF THE CITY.

11. CEMENT DELIVERY TICKETS SHALL BE PROVIDED TO THE CITY'S DESIGNATED SITE INSPECTOR AT THE TIME OF PLACEMENT. IF THE INSPECTOR IS NOT ON SITE THROUGHOUT THE ENTIRE INSTALLATION, ACCUMULATED DELIVERY TICKETS CAN BE PROVIDED TO THE INSPECTOR BY THE CONTRACTOR ON THE FOLLOWING DAY.

12. TESTING OF THE IN-PLACE BASE SHALL BE DONE AT INTERVALS EQUIVALENT TO SUBGRADE TESTING AND SHALL CONSIST OF, AS A MINIMUM, A MOISTURE CONTENT AND COMPACTION TEST.

13. PORTLAND CEMENT CONCRETE, LIMEROCK, RECYCLED CONCRETE, OR FULL DEPTH ASPHALT PAVEMENT MAY BE USED IN PLACE OF SOIL CEMENT BASE. ALL BASE AND ROADWAY DESIGNS SHALL BE SUBJECT TO THE APPROVAL OF THE CITY.

14. SOIL CEMENT BASE MATERIAL CONSTRUCTION SHALL BE CONTINUOUSLY SUPERVISED BY A SOILS TESTING LABORATORY AT THE DEVELOPER'S EXPENSE. THE TESTING LABORATORY SHALL PROVIDE AN ON-SITE TECHNICIAN CERTIFIED IN THE INSTALLATION OF SOIL CEMENT WITH THE CERTIFICATION RECOGNIZED BY F.D.O.T.

15. SOIL CEMENT PAVEMENT BASES WITH THE CURE COAT APPLIED SHALL BE ALLOWED TO CURE A MINIMUM OF SEVEN (7) DAYS UNDER NO TRAFFIC PRIOR TO PLACING ANY ASPHALT SURFACE. (TEST REPORTS ARE REQUIRED TO BE DELIVERED TO THE CITY'S DESIGNATED SITE INSPECTOR PRIOR TO TRAFFIC USAGE.)

16. RECYCLED CONCRETE CAN BE USED AS AN ALTERNATIVE BASE MATERIAL PROVIDED THE MATERIAL IS A MINIMUM OF 60% CARBONATE OF CALCIUM AND MAGNESIUM. THE MATERIAL SHALL BE LIMITED TO MAXIMUM OF 3# WATER SENSITIVE CLAY MATERIAL, LIQUID LIMIT SHALL NOT EXCEED 35 AND BE NON-PLASTIC, AND THE PLASTICITY INDEX SHALL NOT EXCEED 10. THE MATERIAL SHALL NOT CONTAIN ORGANIC MATERIAL, CHERTY OR OTHER EXTREMELY HARD PIECES, LUMPS, BALLS OR POCKETS OF SAND SIZE MATERIAL OF A QUANTITY AS TO BE DETRIMENTAL TO THE PROPER BONDING, FINISHING, OR STRENGTH OF THE RECYCLED CONCRETE BASE. FOR BASE APPLICATIONS, AT LEAST 97 % (BY WEIGHT) OF THE MATERIAL SHALL PASS A 1" SIEVE AND FOR SUBBASE APPLICATIONS, AT LEAST 97 % (BY WEIGHT) OF THE MATERIAL SHALL PASS A 1-1/2" SIEVE. FOR BOTH APPLICATIONS, THE MATERIAL SHALL BE GRADED UNIFORMLY DOWN TO DUST AND THE MINIMUM LBR VALUES ARE TO BE NOT LESS THAN 130. COARSE AGGREGATE USED IN THE RECYCLED CONCRETE SHALL HAVE A MAXIMUM LOSS OF 45 % PER LOS ANGELES ABRASION TEST. ALL MATERIALS SHALL BE WELL GRADED IN ACCORDANCE WITH REQUIREMENTS SET FORTH IN SECTION 204, F.D.O.T., STANDARD SPEC. FOR ROAD AND BRIDGE CONSTRUCTION., (LATEST EDITION).

17. RECYCLED CONCRETE OR LIMEROCK FOR BASE OR SUBBASE APPLICATIONS SHALL BE ALLOWED ON CITY ROADWAYS ONLY WHERE THE LOWEST ELEVATION OF THE ROADWAY SUBBASE IS A MINIMUM OF 6" ABOVE THE SEASONAL HIGH GROUNDWATER TABLE AS CERTIFIED BY A FLORIDA LICENSED PROFESSIONAL SOILS ENGINEER AND SUBSEQUENTLY APPROVED FOR BY THE CITY. IN AREAS NOT MEETING THESE STANDARDS A SOIL CEMENT BASE WILL BE REQUIRED. ALL CRUSHING OF RECYCLED CONCRETE SHALL BE DONE PRIOR TO THE MATERIAL BEING PLACED IN THE ROADWAY. TESTING SHALL HAVE THE SAME REQUIREMENTS AND BE PERFORMED AT THE SAME LOCATION AND INTERVALS AS REQUIRED FOR LIMEROCK.

STANDARD CONSTRUCTION DETAIL
ROADWAY AND PARKING AREA DESIGN AND CONSTRUCTION NOTES
REV. 12/08
FILE NAME: R13.DWG
DETAIL REF: R-13

ROADWAY AND PARKING AREA DESIGN AND CONSTRUCTION NOTES (CONTD.)

18. DESIGN MIXES AND PRODUCT GRADATION INFORMATION FOR ALL MATERIALS TO BE INSTALLED AS PART OF THE LAND DEVELOPMENT CODE REQUIRED IMPROVEMENTS SHALL BE SUBMITTED TO THE CITY'S DESIGNATED SITE INSPECTOR FOR ACCEPTANCE BY THE CITY. THE INFORMATION SHALL BE SUBMITTED NO LESS THAN THREE (3) WORKING DAYS PRIOR TO ANY CONSTRUCTION. SUBMITTALS SHALL INCLUDE, BUT NOT BE LIMITED TO, INFORMATION TO EVALUATE THE MATERIALS PROPOSED FOR INSTALLATION AS SUBBASE, BASE, AND PAVEMENT FOR ALL ROADWAY AND PARKING AREA SURFACES AS WELL AS SIMILAR INFORMATION FOR ALL OTHER CONCRETE SIDEWALKS, CURBING, AND COMPARABLE STRUCTURES AND APPLICATIONS.

19. ALL WEARING COURSE HOT MIX AGGREGATES SHALL BE VIRGIN MATERIAL. THE USE OF RECYCLED ASPHALT MATERIAL (RAP) IN WEARING COURSE MIXES IS NOT ALLOWED.

20. PRIOR TO PLACEMENT FLORIDA STATE CERTIFIED BATCH PLANTS MUST CERTIFY TO THE CITY'S RESIDENT PROJECT INSPECTOR THAT THE ASPHALT DELIVERED TO THE SITE IS IN ACCORDANCE WITH THE APPROVED PLANS AND SPECIFICATIONS.

21. EXTRACTION AND GRADATION TESTS ON ASPHALT MIXES SHALL BE PROVIDED TO THE CITY'S DESIGNATED SITE INSPECTOR FOR EVERY 2500 SQUARE YARDS OF ASPHALT, OR PART THEREOF, TO ENSURE THAT DESIGN MIXES MEET THE CITY STANDARD SPECIFICATIONS.

22. FIELD TESTING OF THE ASPHALT PAVEMENT SHALL BE DONE AT INTERVALS EQUIVALENT TO SUBGRADE TESTING AND SHALL CONSIST OF, AS A MINIMUM, A COMPACTION TEST. ASPHALT PAVEMENT SHALL BE COMPACTED TO 98% DENSITY PER FM 1-T238 (METHOD B), NUCLEAR DENSITY TEST, "BACKSCATTER METHOD".

23. IN ADDITION TO THE FIELD DENSITY TESTS NOTED, THE CITY RESERVES THE RIGHT TO REQUIRE CORE SAMPLES OF PAVEMENT SECTIONS EXTRACTED AND TESTED BY A CERTIFIED SOILS ENGINEERING LABORATORY AT THE DEVELOPER'S EXPENSE. THE CITY'S DESIGNATED SITE INSPECTOR SHALL DESIGNATE THE LOCATIONS OF THE TEST CORE LOCATIONS.

24. THE ROADWAY CROWN SHALL HAVE A STANDARD ONE QUARTER INCH (1/4") PER FOOT SLOPE.

25. ALL ROADWAYS WITH CURB AND GUTTER SECTIONS SHALL HAVE AS A STANDARD A MINIMUM LONGITUDINAL SLOPE OF 0.30% THE ROADWAY CENTERLINE SHALL BE CLEARLY MARKED ON THE DESIGN PLANS. AT A MINIMUM, DESIGN ROADWAY CENTERLINE ELEVATIONS SHALL BE NOTED AT ALL GRADE CHANGES AND AT 100' INTERVALS ALONG THE ROADWAY PROFILE ON BOTH THE DESIGN PLANS AND AS-BUILT DRAWINGS.

26. THE FINISHED PAVEMENT EDGE SHALL BE WITHIN ONE QUARTER INCH (1/4") ABOVE THE ADJACENT CONCRETE CURB FOR CURBS COLLECTING AND CONVEYING STORMWATER.

27. CONCRETE CURBS SHALL BE PROVIDED ON BOTH SIDES OF ALL STREETS AND ALL CONCRETE CURBS SHALL BE CONSTRUCTED WITH 3000 P.S.I. CONCRETE AT 28 DAYS.

STANDARD CONSTRUCTION DETAIL
ROADWAY AND PARKING AREA DESIGN AND CONSTRUCTION NOTES
REV. 12/08
FILE NAME: R14.DWG
DETAIL REF: R-14

ROADWAY AND PARKING AREA DESIGN AND CONSTRUCTION NOTES (CONTD.)

27. CONCRETE CURBING, SIDEWALKS, PAVEMENT AND SIMILAR CONCRETE AREAS SHALL BE SAW CUT WITHIN 4 TO 18 HOURS OF PLACEMENT. SAW CUTS SHALL BE 1/4" IN WIDTH TO A DEPTH OF 1/4 OF THE TOTAL DEPTH OF CONCRETE OR 1-1/2", WHICHEVER IS LESS. SAW CUTS SHALL BE LOCATED AT INTERVALS OF TEN FEET (10') WITH EXPANSION JOINTS AT STREET INTERSECTIONS, RADIUS POINTS, STRUCTURES, AND ALONG CURVES AT SIXTY FEET (60') INTERVALS. ALL EXPANSION JOINT MATERIAL IS REQUIRED TO BE INSTALLED THROUGH THE ENTIRE DEPTH OF THE CONCRETE CURB. FOR LINEAL SECTIONS OF CURBS, EXPANSION JOINTS SHALL BE LOCATED AT A MAXIMUM SPACING OF FIVE-HUNDRED FEET (500') AND SHALL BE 1/2" IN WIDTH.

28. AN "X" SHALL BE CUT IN THE CURB TO MARK THE LOCATION OF WATER DISTRIBUTION SYSTEM VALVE.

29. A "V" SHALL BE CUT IN THE CURB TO MARK THE LOCATION OF ALL SEWER SERVICES.

30. A "L" SHALL BE CUT IN THE CURB TO MARK THE LOCATION OF ALL RECLAIMED WATER SERVICES.

31. A " A" SHALL BE CUT IN THE CURB TO MARK THE LOCATION OF ALL POTABLE WATER SERVICES.

32. THREE (3) CONCRETE CYLINDERS SHALL BE TAKEN AND TESTED (1 IN 14 DAYS AND 1 IN 28 DAYS) FOR EVERY SEVENTY-FIVE (75) CUBIC YARDS OF CONCRETE OR LESS PLACED. TEST RESULTS SHALL THEN BE PROVIDED TO THE CITY'S DESIGNATED SITE INSPECTOR AS THEY BECOME AVAILABLE.

33. A CONCRETE SLUMP TEST SHALL BE REQUIRED WITHIN THE FIRST 30 CUBIC YARDS OF CONCRETE. THEREAFTER, SLUMP TESTS SHALL BE REQUIRED FOR EVERY THIRTY (30) CUBIC YARDS OF CONCRETE, OR FRACTION THEREOF, WITH COPIES OF THE RESULTS PROVIDED TO THE CITY'S DESIGNATED SITE INSPECTOR. THE SLUMP TEST SHALL MEET THE REQUIRED MIX DESIGN ON EACH LOAD DELIVERED.

34. THE DEVELOPER SHALL PROVIDE ALL REQUIRED PAVEMENT MARKINGS ON ALL ROADWAYS PER CITY, COUNTY, AND STATE REQUIREMENTS. CENTERLINE STRIPES SHALL BE PROVIDED ON EXTENSIONS OF CITY COLLECTOR OR ARTERIAL ROADS, COUNTY ROADS, STATE HIGHWAYS, AND ALONG LOCAL STREETS IN THE VICINITY OF THEIR INTERSECTION WITH THE ABOVE MENTIONED ROADWAYS.

35. A FDOT APPROVED STOP SIGN AND A 24"-WIDE WHITE THERMOPLASTIC STOP BAR ARE REQUIRED AT ALL ROADWAY INTERSECTIONS.

36. ALL TRAFFIC CONTROL DEVICES PLACED AT INTERSECTIONS, PRIVATE STREETS, PUBLIC STREETS, COUNTY ROADS, AND STATE HIGHWAYS WITHIN THE CITY LIMITS SHALL BE INSTALLED ACCORDING TO THE MANUAL ON UNIFORM TRAFFIC CONTROL DEVICES, LATEST EDITION. THE MAINTENANCE-OF-TRAFFIC (MOT) INSTALLATION AND SUBSEQUENT OPERATION SHALL BE OVERSEEN BY A CONTRACTOR CERTIFIED BY THE AMERICAN TRAFFIC SAFETY SERVICES ASSOCIATION, OR EQUIVALENT CERTIFICATION RECOGNIZED BY FDOT.

STANDARD CONSTRUCTION DETAIL
ROADWAY AND PARKING AREA DESIGN AND CONSTRUCTION NOTES
REV. 12/08
FILE NAME: R15.DWG
DETAIL REF: R-15

ROADWAY AND PARKING AREA DESIGN AND CONSTRUCTION NOTES (CONTD.)

37. THE DEVELOPER IS RESPONSIBLE FOR PAYING FEES FOR TRAFFIC CONTROL DEVICES TO THE CITY FOR INSTALLATION. STREET SIGNS AND STOP SIGNS SHALL BE PLACED AT ALL INTERSECTIONS, INCLUDING BUT NOT LIMITED TO PRIVATE STREETS, PUBLIC STREETS, COUNTY ROADS, AND STATE HIGHWAYS WITHIN THE CITY LIMITS.

38. THE DEVELOPER IS RESPONSIBLE FOR PAYING FEES FOR ALL STREET LIGHTS PRIOR TO ACCEPTANCE OF THE PROJECT BY THE CITY.

39. FOUR FOOT (4') WIDE SIDEWALKS SHALL BE PROVIDED ON BOTH SIDES OF ALL RESIDENTIAL STREETS. (SEE DETAIL, INDEXES M-2 AND M-3)

40. BIKE PATHS SHALL BE CONSTRUCTED EIGHT FEET (8') IN WIDTH ALONG ARTERIAL HIGHWAYS AS DIRECTED BY THE CITY. (SEE DETAIL, INDEXES M-2 AND M-3)

41. STANDARD TURNING RADII FOR INTERSECTIONS:

RESIDENTIAL STREETS WITH STATE & COUNTY ROADWAYS OR MAJOR THOROUGHFARES WITHIN THE CITY	35-50 FT.
ENTRANCES TO COMMERCIAL SITES OFF OF CITY STREETS	35 FT.
INTERSECTIONS INTERIOR IN SUBDIVISIONS	35 FT.

SHOULD VOLUSIA COUNTY OR THE FLORIDA DEPARTMENT OF TRANSPORTATION (F.D.O.T.) DETERMINE THAT LARGER RADII ARE WARRANTED WITHIN THEIR RIGHT-OF-WAY, THE LARGER RADII SHALL PREVAIL.

42. CONSTRUCTION METHODS AND DESIGN FOR CONCRETE PAVEMENT SHALL CONFORM TO FDOT STANDARD SPECIFICATION FOR ROAD AND BRIDGE CONSTRUCTION, LATEST EDITION.

43. ALL CONTRACTORS THAT ARE PERFORMING THE CONSTRUCTION OF LAND DEVELOPMENT CODE REQUIRED IMPROVEMENTS (INCLUDING WATER MAINS, SANITARY SEWER MAINS, RECLAIMED WATER MAINS, STORM WATER PIPES AND INLETS, ROADWAYS, AND PARKING FACILITIES) SHALL BE CERTIFIED WITH THE STATE OF FLORIDA BOARD OF PROFESSIONAL REGULATIONS (BPR) FOR THE TYPE OF WORK THAT THEY PERFORM.

44. ALL CONTRACTORS THAT ARE PERFORMING THE CONSTRUCTION WORK OF LAND DEVELOPMENT CODE REQUIRED IMPROVEMENTS SHALL BE LICENSED BY THE STATE OF FLORIDA AND REGISTERED WITH THE CITY OF PORT ORANGE. THE LICENSE AND REGISTRATION SHALL PERTAIN DIRECTLY TO THE TYPE OF WORK BEING PERFORMED.

45. EXCEPT AS PROVIDED IN THE LAND DEVELOPMENT CODE, ALL ELECTRIC, TELEPHONE, TELEVISION LINES AND SIMILAR UTILITIES ARE REQUIRED TO BE INSTALLED UNDERGROUND AT THE EXPENSE OF THE OWNER, DEVELOPER, AND BUILDER.

STANDARD CONSTRUCTION DETAIL
ROADWAY AND PARKING AREA DESIGN AND CONSTRUCTION NOTES
REV. 12/08
FILE NAME: R16.DWG
DETAIL REF: R-16

ROADWAY AND PARKING AREA DESIGN AND CONSTRUCTION NOTES (CONTD.)

46. UTILITY DEPTH:
   A. HIGH VOLTAGE UTILITIES SUCH AS POWER (FEEDER, SERVICE, AND DROPS) SHALL BE BURIED A MINIMUM OF 30 INCHES IN DEPTH.
   B. LOW VOLTAGE UTILITIES SUCH AS PHONE AND CABLE TV SHALL BE BURIED A MINIMUM OF 18 INCHES IN DEPTH FOR FEEDER AND SERVICES. SERVICE DROPS SHALL BE BURIED A MINIMUM OF 12 INCHES IN DEPTH.
   C. IN NO INSTANCE SHALL THE DEPTH OF COVER BE LESS THAN 30" FROM FINISHED GRADE TO THE TOP OF PIPE FOR POTABLE WATER MAINS, SANITARY SEWER MAINS, AND RECLAIMED WATER MAINS. HOWEVER, IN THE EVENT THAT THIS CONDITION CANNOT BE MET DUE TO UNANTICIPATED CONFLICTS DURING THE CONSTRUCTION PROCESS, DUCTILE IRON PRESSURE CLASS 350 OR CONCRETE ENCASEMENT MAY BE USED AS APPROVED BY THE CITY PUBLIC UTILITIES DEPARTMENT.

47. LANDSCAPE PLANS SHALL CLEARLY DEPICT THE DESIGN LOCATION OF PLANTINGS RELATIVE TO THE LOCATION OF UNDERGROUND AND OVERHEAD PUBLIC UTILITIES AND STORMWATER INFRASTRUCTURE IN ORDER TO EVALUATE POTENTIAL CONFLICTS.

STANDARD CONSTRUCTION DETAIL
ROADWAY AND PARKING AREA DESIGN AND CONSTRUCTION NOTES
REV. 12/08
FILE NAME: R17.DWG
DETAIL REF: R-17

TECHNICAL SPECIFICATIONS FOR SITE PLANS AND SUBDIVISIONS TESTING

A. MATERIALS

THE INSPECTION AND TESTING OF MATERIALS AND FINISHED ARTICLES TO BE INCORPORATED IN THE WORK SHALL BE MADE BY BUREAUS, LABORATORIES, OR AGENCIES APPROVED BY THE ENGINEER OF RECORD. THE CONTRACTOR SHALL SUBMIT SUCH SAMPLES, OR SUCH SPECIAL OR TEST PIECES OF MATERIALS AS THE ENGINEER OF RECORD MAY REQUIRE. THE CONTRACTOR SHALL NOT INCORPORATE ANY MATERIAL OR FINISHED ARTICLE INTO THE WORK UNTIL THE RESULTS OF THE INSPECTIONS OR TESTS ARE KNOWN AND THE CONTRACTOR HAS BEEN NOTIFIED BY THE ENGINEER OF RECORD THAT THE MATERIAL OR FINISHED ARTICLE IS ACCEPTED. ALL MATERIALS MUST BE OF THE SPECIFIED QUALITY AND BE EQUAL TO THE APPROVED SAMPLE IF A SAMPLE HAS BEEN SUBMITTED. CERTIFIED COPIES OF ALL TESTS MADE SHALL BE SUBMITTED TO THE ENGINEER OF RECORD AS WELL AS TO THE CITY'S DESIGNATED SITE INSPECTOR. THE CITY'S DESIGNATED SITE INSPECTOR MUST RECEIVE COPIES OF ALL TESTING REPORTS AND CERTIFICATES PRIOR TO THE ENGINEER OF RECORD REQUESTING A FINAL PROJECT INSPECTION FROM THE CITY.

B. LABORATORY CONTROL AND CERTIFICATES

1. SPECIFICATIONS . SAMPLING, TESTING, AND LABORATORY METHODS SHALL BE IN ACCORDANCE WITH THE STANDARD SPECIFICATIONS OF THE AASHTO OR ASTM. WHERE AASHTO OR ASTM SPECIFICATIONS ARE USED, THE REFERENCE SHALL BE CONSTRUED TO BE THE MOST RECENT STANDARD SPECIFICATIONS OR TENTATIVE SPECIFICATIONS OF THE AASHTO OR ASTM IN FORCE ON THE DATE OF THE TEST.

2. TEST & CERTIFICATES. THE CONTRACTOR SHALL ENGAGE AN APPROVED TESTING LABORATORY TO PROVIDE THE FOLLOWING TESTS AND CERTIFICATIONS SIGNED BY A REGISTERED ENGINEER OF THE STATE OF FLORIDA. ALL TECHNICIANS PERFORMING THE TESTS SHALL BE STATE CERTIFIED FOR THE TESTING PERFORMED. ADDTIONAL TESTS THAT MAY BE REQUIRED BY EITHER THE ENGINEER OF RECORD OR THE CITY SHALL ALSO BE PROVIDED BY THE CONTRACTOR, AND THE FOLLOWING SHALL NOT BE TAKEN AS A COMPLETE AND EXHAUSTIVE LIST OF THE CONTRACTOR'S TESTING RESPONSIBILITIES.

   A. SOIL ANALYSIS FOR STRUCTURAL FILL MATERIAL PRIOR TO INSTALLATION.
   B. PROCTOR DENSITIES, MOISTURE CONTENT, COMPACTED FIELD DENSITIES, AND ATTERBERG LIMITS.
   C. SOIL CEMENT MIX DESIGNS AND COMPRESSIVE STRENGTH TESTS (FOR SOIL CEMENT ROAD BASE ONLY).
   D. SUPERVISION OF ALL SOIL CEMENT BASE CONSTRUCTION.
   E. ANALYSIS OF RECYCLED CONCRETE BASE MATERIAL PRIOR TO INSTALLATION.
   F. ASPHALT MIX DESIGN, BITUMEN CONTENT, SIEVE ANALYSIS, HUBBARD FIELD STABILITY TESTS, NUCLEAR DENSITY TESTS (BACKSCATTER METHOD), AND ANALYSIS OF CORE SAMPLES.
   G. CONCRETE MIX DESIGNS FOR ALL APPLICATIONS INCLUDING PAVEMENT, CAST-IN-PLACE STRUCTURES, CURBING, GUTTERS, SIDEWALKS, BIKE PATHS, APRONS AND DRIVEWAYS.
   H. COMPRESSIVE TEST CYLINDERS AND SLUMP TESTS FOR ALL APPLICATIONS OF CONCRETE, INCLUDING PAVEMENT, CAST-IN-PLACE STRUCTURES, CURBING, GUTTERS, SIDEWALKS, BIKE PATHS, APRONS, AND DRIVEWAYS.
   I. CHLORINE RESIDUAL AND BACTERIOLOGICAL TESTING OF WATER MAINS.
   J. PRESSURIZED LEAK TESTING OF WATER MAINS, FORCE MAINS, AND RECLAIMED WATER MAINS.

STANDARD CONSTRUCTION DETAIL
TECHNICAL SPECIFICATIONS FOR SITE PLANS AND SUBDIVISIONS TESTING
REV. 12/08
FILE NAME: R18.DWG
DETAIL REF: R-18

SUBDIVISION TECHNICAL SPECIFICATIONS: SODDING, SEEDING AND MULCHING

A. SCOPE OF WORK THE WORK IN THIS SECTION CONSISTS OF FURNISHING AND COMPLETELY INSTALLING SOD, OR SEED AND MULCH OVER THE LIMITS CALLED FOR ON THE CONSTRUCTION DRAWINGS. AT A MINIMUM, ALL WORK SHALL MEET THE MINIMUM SPECIFICATIONS OF THE FDOT STANDARD SPECIFICATIONS FOR ROAD AND BRIDGE CONSTRUCTION, LATEST EDITION, AS OUTLINED IN SECTIONS 570 (GRASSING BY SEEDING) AND 575 (SODDING). IN ADDITION, ALL WORK SHALL MEET THE MINIMUM REQUIREMENTS OF THE CITY.

B. MATERIALS GRASS SEED SHALL BE A MIXTURE OF:

PENSACOLA BAHIA	50%
(USE 50 % SCARIFIED SEED)	
HULLED BERMUDA	25%
BROWN TOP MILLET	25%

IN THE FALL AND WINTER MONTHS, AND WITH THE APPROVAL OF THE CITY, ANNUAL RYE GRASS SHALL BE SUBSTITUTED IN EQUAL AMOUNTS FOR THE BROWN TOP MILLET. SEED SHALL BE PRE-MIXED BY A SEED COMPANY TO THE PERCENTAGES DESCRIBED ABOVE, WITH CERTIFICATION FROM THE SUPPLIER PROVIDED TO THE CITY'S DESIGNATED PROJECT LANDSCAPE INSPECTOR PRIOR TO USE.

MULCH USED SHALL BE STRAW OR HAY CONSISTING OF OATS, RYE, OR WHEAT STRAW, OR OF PANGOLA, PEANUT, COASTAL BERMUDA, OR BAHIA GRASS HAY. MULCH SHALL BE FREE FROM UNDESIRABLE WEED AND OTHER UNDESIRABLE GRASS.

C. METHODS. GRASSING SHALL BE DONE IMMEDIATELY UPON COMPLETION OF THE FINE GRADING OPERATION. HOWEVER, NO SEEDING SHALL BE DONE WHEN THE GROUND IS FROZEN OR UNDULY WET. THE RATE OF SPREAD FOR THE SEED MATERIAL SHALL BE ONE HUNDRED AND THIRTY (130) POUNDS PER ACRE.

APPROXIMATELY ONE INCH (1"), LOOSE THICKNESS, OF MULCH MATERIAL SHALL BE APPLIED UNIFORMLY OVER THE SEEDED AREAS (APPROXIMATELY ONE AND ONE-HALF (1-1/2) BALES PER 1000 SQUARE FEET). THE MULCH MATERIAL SHALL BE CUT INTO THE SOIL WITH A DISC HARROW OR OTHERWISE ANCHORED DOWN. UNDER PROPER CIRCUMSTANCES, CONTRACTOR MAY REQUEST OPTION TO INSTALL HYDRO-SEEDING SUBJECT TO THE APPROVAL OF THE PROJECT LANDSCAPE ARCHITECT AND THE CITY

STANDARD CONSTRUCTION DETAIL
SUBDIVISION TECHNICAL SPECIFICATIONS: SODDING, SEEDING AND MULCHING
REV. 12/08
FILE NAME: R20.DWG
DETAIL REF: R-20

Dewberry®

Dewberry Engineers Inc.
800 NORTH MAGNOLIA AVE
ORLANDO, FL 32803
SUITE 1000
PHONE: 407.843.5120
ENGINEERING BUSINESS -8794

WESTPORT RESERVE (PHASE 2B)

PORT ORANGE, FL

SEAL

7/1/2016

No.	DATE	BY	Description

REVISIONS

DRAWN BY TFS
APPROVED BY DMV
CHECKED BY NPS
DATE JANUARY 2016
DATUM NAVD 88

TITLE

CITY ROAD/ DRAINAGE DETAILS

PROJECT NO. 50079046 (CC 1)

C19

SHEET NO.

3:49:46 PM ...\CC1-SF PH1 CityRoadDetails-02.dgn

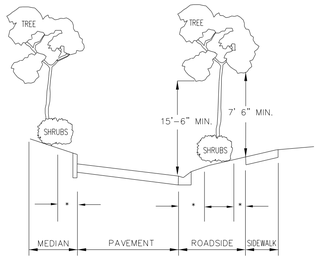

ROADWAY CLEAR ZONES (*)					
	DESIGN SPEED (MPH)				
TYPE FACILITY	25 & BELOW	30	35	40	45+
DISTANCE FROM EDGE OF PAVEMENT	6'	6' LOCAL 10' COLLECTOR 14' ARTERIAL	6' LOCAL 10' COLLECTOR 14' ARTERIAL	10' COLLECTOR 14' ARTERIAL	F.D.O.T. STANDARD
DISTANCE FROM SIDEWALK	1.5	1.5	1.5	1.5	F.D.O.T. STANDARD

* SEE NOTES ON SHEET R-21B *

STANDARD CONSTRUCTION DETAIL
ROADWAY AND MISCELLANEOUS LANDSCAPING
DESIGN AND CONSTRUCTION NOTES
REV. 12/08
FILE NAME: R21A.DWG
DETAIL REF: R-21A

ROADWAY AND MISCELLANEOUS LANDSCAPING DESIGN AND CONSTRUCTION NOTES (CONTD.)

NOTES:

1. THE CLEAR ZONE MAY BE REDUCED ON A CASE BY CASE BASIS IF THE MINIMUM OFFSET CANNOT BE REASONABLY OBTAINED OR IF A NON-MOUNTABLE CURBE TYPE IS INSTALLED.
2. TREES IN EXCESS OF 12" CALIPER AT MATURITY AND MULTI-TRUNKED PALMS SHALL BE SET BACK TO TWICE THE MINIMUM CLEAR ZONE (2 X *).
3. WHERE PAVEMENT WIDENING IN ACCORDANCE WITH FDOT STANDARDS IS NOT PROVIDED IN HORIZONTAL CURVES, ADDITIONAL CLEAR ZONE SHALL BE PROVIDED EQUAL TO THE REQUIRED PAVEMENT WIDENING.
4. CLEAR ZONES ON CURBED ROADS SHALL BE MEASURED FROM THE FACE OF CURB OR FROM THE EDGE OF THE THROUGH LANE ON RURAL ROADS. CURBED STREETS ARE FOR HIGH BACK CURBS ONLY.
5. SHRUBS ADJACENT TO SIDEWALKS AND WITHIN INTERSECTION SIGHT TRIANGLES CANNOT EXCEED 24" ABOVE THE LOWEST ADJACENT ROADWAY GRADE. ALL OTHER SHRUBS MUST BE LESS THAN OR EQUAL TO 30 INCHES IN HEIGHT.
6. INSTALLATION OF LANDSCAPING IN PUBLIC RIGHTS-OF-WAY REQUIRES EXECUTION OF A "USE AGREEMENT" BETWEEN THE DEVELOPER AND THE CITY. FOR INSTANCES WHERE THE STREETS AND PRIVATE AND PUBLIC UTILITY EASEMENTS ARE PROVIDED, THE DEVELOPER MAY BE REQUIRED TO OBTAIN A RELEASE FROM THE FRANCHISE UTILITIES IN ORDER TO INSTALL THE LANDSCAPING IMPROVEMENTS.
7. LANDSCAPING PLANS SHALL CLEARLY DEPICT THE DESIGN LOCATION OF PLANTINGS RELATIVE TO THE LOCATION OF UNDERGROUND AND OVERHEAD PUBLIC UTILITIES AND STORMWATER INFRASTRUCTURE IN ORDER TO EVALUATE POTENTIAL CONFLICTS.
8. SHRUBS, UNDERSTORY, TREES AND PALMS SHALL BE ALLOWED IN THE RIGHT-OF-WAY WITH EXISTING AND PROPOSED UTILITIES. SHADE TREES, ESPECIALLY THOSE WITH AGGRESSIVE ROOT SYSTEMS, WILL REQUIRE SPECIFIC CITY APPROVAL.
9. SHADE TREES MUST NOT BE PLANTED UNDER OR DIRECTLY ADJACENT TO OVERHEAD UTILITIES THAT WOULD REQUIRE EXCESSIVE PRUNING TO AVOID THE UTILITY LINES.
10. TREES WITH AGRESSIVE ROOT SYSTEMS SHALL REQUIRE SOME FORM OF ROOT GUIDING SYSTEM TO PREVENT THE UPHEAVAL OF ADJACENT ROADWAY PAVEMENT AND/OR SIDEWALKS.

STANDARD CONSTRUCTION DETAIL
ROADWAY AND MISCELLANEOUS LANDSCAPING
DESIGN AND CONSTRUCTION NOTES
REV. 12/08
FILE NAME: R21B.DWG
DETAIL REF: R-21B

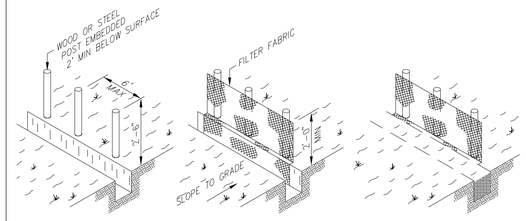

SILT FENCE DETAIL
F.D.O.T. INDEX NO. 102

NOTES:

1. MATERIALS, CONSTRUCTION METHODS AND MAINTENANCE SHALL BE IN ACCORDANCE WITH THE FLORIDA DEPARTMENT OF TRANSPORTATION STANDARD SPECIFICATIONS AND DESIGN STANDARDS CURRENT EDITION.
2. CONTRACTOR SHALL PROVIDE SILT FENCES, SYNTHETIC JUTE BALES, WATTLES, &/OR HAVE BEST MANAGEMENT PRACTICES (BMP'S) AS REQUIRED AT ALL STORMWATER DISCHARGE POINTS FOR EROSION CONTROL AND SEDIMENT CONTROL DURING CONSTRUCTION.
3. CONTRACTOR SHALL ROUGH GRADE STORM- WATER SWALES AND RETENTION AREAS PRIOR TO CONSTRUCTION OF SITE IMPROVEMENTS.
4. CONTRACTOR SHALL MEET ALL PERMIT CONDITIONS AS ESTABLISHED BY THE CITY OF PORT ORANGE AND ALL OTHER APPLICABLE AGENCIES, INCLUDING BUT NOT LIMITED TO COUNTY, FDOT, AND THE SJRWMD.
5. CONTRACTOR WILL BE ALLOWED TO USE A SMALL PIECE OF EQUIPMENT UP TO THE SIZE AND WEIGHT OF A D-3 DOZER TO CLEAR A NARROW PATH TO INSTALL THE SILT FENCE.

STANDARD CONSTRUCTION DETAIL
SILT FENCE TURBIDITY BARRIER
REV. 12/08
FILE NAME: R22.DWG
DETAIL REF: R-22

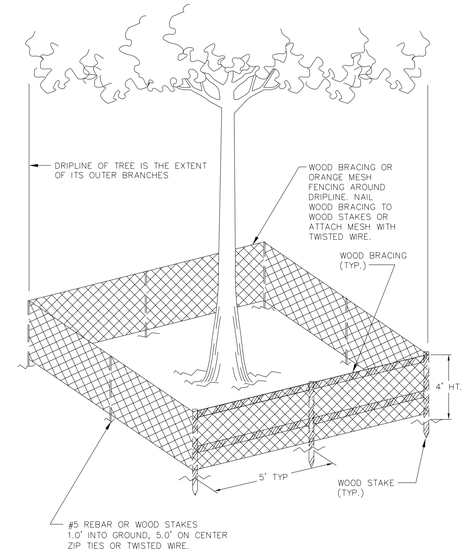

NOTE: BARBED WIRE FENCING IS NOT PERMISSIBLE

STANDARD CONSTRUCTION DETAIL
TREE PROTECTION BARRICADE
REV. 12/08
FILE NAME: R23.DWG
DETAIL REF: R-23

CONTRACTOR REQUIREMENTS FOR SITE CLEARING, GRADING, AND EROSION CONTROL DESIGN AND CONSTRUCTION NOTES

THE FOLLOWING MEASURES REPRESENT MINIMUM STANDARDS TO BE ADHERED TO BY THE CONTRACTOR THROUGHOUT THE CONSTRUCTION OF A PROJECT. THE CITY RESERVES THE RIGHT TO REQUIRE ADDITIONAL MEASURES TO BE EMPLOYED WHEN WARRANTED BY EXTREME CONDITIONS AND/OR THE FAILURE OF THE CONTRACTOR TO EMPLOY THE APPROPRIATE EROSION CONTROL BEST MANAGEMENT PRACTICES. FAILURE TO COMPLY WITH THESE PROVISIONS SHALL RESULT IN THE ISSUANCE OF A "STOP WORK ORDER".

1. NO DISTURBANCE OF PROPOSED CONSERVATION EASEMENTS, NATURAL BUFFERS, OR WATER BODIES IS PERMITTED. THE CONTRACTOR SHALL LOCATE THESE AREAS ON SITE AND BARRICADE THEM TO AVOID ANY UNAUTHORIZED CLEARING. BARRICADES AND OTHER PROTECTIVE FENCING ARE TO BE LOCATED AT THE DRIP LINE OF EXISTING NATIVE TREES OR AT THE EDGE OF THE NATIVE UNDER- STORY HABITAT, WHICHEVER IS NEAREST TO THE CONSTRUCTION ACTIVITY.
2. SPECIMEN AND HISTORIC TREES, CONSERVATION EASEMENTS, NATURAL VEGETATION BUFFERS, AND SIMILAR AREAS MUST BE PROTECTED BY BARRICADES OR FENCING PRIOR TO CLEARING. BARRICADES ARE TO BE SET AT THE DRIP LINE OF THE TREES AND MAINTAINED THROUGHOUT THE DURATION OF THE PROJECT. BARBED WIRE IS NOT PERMITTED AS A PROTECTIVE BARRIER.
3. WHERE A CHANGE OF GRADE OCCURS AT THE DRIP LINE OF A SPECIMEN TREE, SILT FENCES WILL BE REQUIRED DURING CONSTRUCTION AND RETAINING WALLS MUST BE INSTALLED PRIOR TO FINAL ACCEPTANCE BY THE CITY.
4. IT SHALL BE THE RESPONSIBILITY OF THE CONTRACTOR TO HAVE ALL PROTECTIVE VEGETATION BARRICADES AND EROSION CONTROL STRUCTURES AND MEASURES IN PLACE PRIOR TO THE COMMENCEMENT OF ANY EARTHWORK, INCLUDING PRELIMINARY GRUBBING. THESE MEASURES INCLUDE, BUT ARE NOT LIMITED TO, TEMPORARY CONSTRUCTION FENCES, SYNTHETIC JUTE BALES, WATTLES, &/OR HAVE BEST MANAGEMENT PRACTICES (BMP'S) AS REQUIRED, SILT FENCES, AND FLOATING TURBIDITY BARRIERS. FURTHER, IT SHALL BE THE RESPONSIBILITY OF THE CONTRACTOR TO MAINTAIN ALL EROSION CONTROL DEVICES THROUGHOUT THE DURATION OF THE ENTIRE PROJECT. MAINTENANCE SHALL INCLUDE PERIODIC INSPECTION AND REMOVAL OF DEBRIS ABUTTING EROSION CONTROL DEVICES AS SPECIFICALLY IDENTIFIED IN CHAPTER 10, ARTICLE I, SECTION 5 OF THE LAND DEVELOPMENT CODE.
5. PRIOR TO THE INSTALLATION OF ANY FILL MATERIALS ON SUBJECT SITE, SILT FENCES SHALL BE INSTALLED (1) ALONG SUBJECT SITE BOUNDARY AND PROPERTY LINES, (2) AT THE EDGE OF CONSERVATION EASEMENTS AND WETLANDS, (3) ADJACENT TO NATURAL LANDSCAPE BUFFERS, (4) AROUND THE PERIMETER OF EXISTING STORM WATER TREATMENT FACILITIES, AND (5) AT ANY ADDITIONAL AREAS THAT THE CITY DEEMS NECESSARY TO BE PROTECTED FROM POTENTIAL EROSION IMPACTS DURING CONSTRUCTION. THESE CONDITIONS SHALL APPLY IN ALL INSTANCES WHERE FILL MATERIAL IS BEING INSTALLED WITHIN 25 FEET OF ANY OF THE AFOREMENTIONED LOCATIONS. WHILE THESE ITEMS REPRESENT THE MINIMUM REQUIREMENTS, THE CITY RESERVES THE RIGHT TO IMPOSE ADDITIONAL PROTECTIVE MEASURES, AS DETERMINED DURING ACTUAL SITE VISITS CONDUCTED AS PART OF THE STANDARD REVIEW OF THE SITE-SPECIFIC ABC CLEARING PERMIT APPLICATION AND THROUGHOUT PROJECT CONSTRUCTION.
6. WHERE FILL MATERIAL IS INTENDED TO BE INSTALLED ADJACENT TO EXISTING VEGETATION WHICH IS INTENDED TO REMAIN NATURAL, THE CONTRACTOR MAY INSTALL SILT FENCING AS A TREE PROTECTION MEASURE, IN LIEU OF INSTALLING EITHER WOOD BRACING OR ORANGE MESH FENCING. THIS PRACTICE IS ENCOURAGED BY THE CITY. IF THE SILT FENCE FAILS TO PROVIDE ADEQUATE PROTECTION FROM IMPACT DUE TO CONSTRUCTION, THEN ADDITIONAL CONSTRUCTION FENCING OR WOOD BRACING SHALL BE REQUIRED.
7. AT A MINIMUM, THE CONTRACTOR SHALL SEED AND MULCH ALL DISTURBED AREAS. SUFFICIENT GRASS COVERAGE IS TO BE ESTABLISHED WITHIN TWO WEEKS.
8. IT SHALL BE THE RESPONSIBILITY OF THE CONTRACTOR THROUGH SCHEDULING, TO MINIMIZE THE DISTURBANCE OF SITE AREAS THAT HAVE BEEN BROUGHT TO THEIR PROPOSED FINAL GRADE. WITHIN SEVEN (7) DAYS OF BRINGING A SUBJECT AREA TO ITS FINAL GRADE OR INACTIVITY IN CONSTRUCTION, THE CONTRACTOR SHALL INSTALL SEED AND MULCH OR SOD, AS REQUIRED.

STANDARD CONSTRUCTION DETAIL
CONTRACTOR REQUIREMENTS FOR
SITE CLEARING, GRADING, AND EROSION CONTROL
DESIGN AND CONSTRUCTION NOTES
REV. 04/10
FILE NAME: R25.DWG
DETAIL REF: R-25

CONTRACTOR REQUIREMENTS FOR SITE CLEARING, GRADING, AND EROSION CONTROL DESIGN AND CONSTRUCTION NOTES (CONTD.)

9. FOR INDIVIDUAL CONSTRUCTION PROJECTS INVOLVING MULTIPLE PHASES, (PHASING IS REQUIRED FOR SITES 30 ACRES AND LARGER) UPON COMPLETION OF EACH PHASE OF THE PROJECT, SEEDING AND MULCHING AND / OR SODDING IS TO BE PERFORMED PRIOR TO COMMENCING THE NEXT PHASE OF CONSTRUCTION.
10. ONCE AN AREA IS SEEDED OR SODDED, IT MUST BE MAINTAINED BY THE CONTRACTOR TO ALLOW THE GRASS TO BECOME ESTABLISHED. IF THE GRASS IS NOT ESTABLISHED WITHIN TWO WEEKS THE CITY MAY REQUIRE THE CONTRACTOR TO RE-SEED OR A NON-VEGETATIVE OPTION MAY BE EMPLOYED.
11. ANY BURNING OF CLEARED MATERIALS MUST BE INSPECTED AND PERMITTED ON A DAILY BASIS. CONTACT THE FIRE MARSHALL AT 756-5401 PRIOR TO EACH DAY OF DESIRED BURNING.
12. ABSOLUTELY NO BURYING OF CLEARED MATERIALS IS PERMITTED.
13. THE REMOVAL OF ALL VEGETATION AND TOPSOIL ON THE FUTURE ROADWAY, PARKING AND BUILDING LOT AREAS IS REQUIRED TO BE COMPLETED PRIOR TO THE PLACEMENT OF FILL ON THOSE AREAS. THE TOPSOIL MAY BE TEMPORARILY STOCKPILED AND USED AS TOPSOIL OVER OVER PROPOSED GREEN AREAS SUCH AS PLANT BEDS, SODDED AREAS, AND WHERE TREES ARE TO BE INSTALLED OR RELOCATED.
14. A SIGNED, DATED, AND SEALED LETTER FROM A SOILS ENGINEER OR THE ENGINEER OF RECORD CERTIFYING THAT THE AREAS TO BE FILLED HAVE BEEN STRIPPED OF ORGANIC MATERIALS, MUST BE SUBMITTED TO THE CITY PRIOR TO FILLING.
15. FILL MATERIAL IS TO BE PLACED IN ONE FOOT LIFTS AND COMPACTED TO THE APPROPRIATE DENSITY (98% FOR PAVED AREAS AND 95% FOR BUILDING PADS AND ALL OTHER AREAS AS PER AASHTO T-180).
16. DURING SUBDIVISION DEVELOPMENT WHEN FUTURE BUILDING LOTS ARE FILLED AS PART OF THE OVERALL SUBDIVISION IMPROVEMENTS, COMPACTION TEST REPORTS MUST BE PERFORMED ON THE BUILDING LOTS AT 300 FOOT INTERVALS. THESE TESTS ARE TO BE PERFORMED IN ONE-FOOT VERTICAL INCREMENTS. THE RESULTS OF THESE TESTS ARE TO BE SUBMITTED TO THE CITY UPON COMPLETION OF THE TESTS.
17. IF ANY MUCK MATERIAL IS DISCOVERED, IT SHALL BE REQUIRED TO BE REMOVED AND REPLACED WITH A SUITABLE MATERIAL THAT IS PROPERLY BACKFILLED, COMPACTED AND TESTED USING AASHTO T-180 MODIFIED PROCTOR METHOD.
18. STOCKPILING IS NOT GENERALLY PERMITTED BY THE CITY. WHEN ALLOWED, STOCKPILES SHALL NOT EXCEED SIX FEET IN HEIGHT MEASURED FROM THE ORIGINAL GRADE. AT A MINIMUM, STOCK PILES THAT WILL REMAIN IN PLACE IN EXCESS OF TWENTY DAYS SHOULD BE SEEDED AND MULCHED IMMEDIATELY UPON PLACEMENT OF THE FINAL LIFT.
19. SOILS ARE TO BE STABILIZED BY WATER OR OTHER MEANS DURING CONSTRUCTION. THIS IS INTENDED TO REDUCE SOIL EROSION AND THE IMPACT TO NEIGHBORING COMMUNITIES. ADEQUATE WATERING METHODS SHOULD BE EMPLOYED TO ALLOW DAILY COVERAGE OF THE ENTIRE LIMITS OF ALL AREAS THAT DO NOT HAVE AN ESTABLISHED VEGETATIVE COVER. METHODS TO BE EMPLOYED INCLUDE, BUT ARE NOT LIMITED TO, WATER TRUCKS, PERMANENT IRRIGATION SYSTEMS, TEMPORARY SPRINKLER SYSTEMS OPERATED BY PUMPING UNITS CONNECTED TO WET RETENTION PONDS, WATER CANNONS, TEMPORARY IRRIGATION SYSTEMS MOUNTED ATOP STOCKPILE AREAS, AND OTHER METHODS AS DEEMED NECESSARY BY THE CITY.
20. ALL FILL MATERIALS LOCATED BENEATH STRUCTURES AND PAVEMENT SHALL CONSIST OF CLEAN GRANULAR SAND FREE FROM ORGANICS AND SIMILAR MATERIAL THAT COULD DECOMPOSE.
21. ALL FILL TO BE PLACED IN LANDSCAPED AREAS SHALL HAVE A Ph RANGE BETWEEN 5.5 AND 7.5, BE ORGANIC IN NATURE, FREE OF ROCKS AND DEBRIS, OR MATCH NATIVE EXISTING SOILS.

STANDARD CONSTRUCTION DETAIL
CONTRACTOR REQUIREMENTS FOR
SITE CLEARING, GRADING, AND EROSION CONTROL
DESIGN AND CONSTRUCTION NOTES
REV. 04/10
FILE NAME: R26.DWG
DETAIL REF: R-26

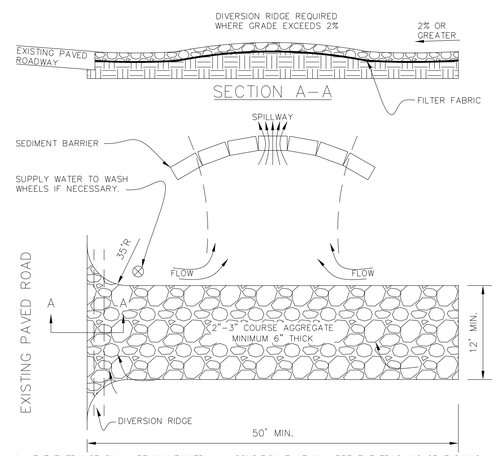

1. THE ENTRANCE SHALL BE MAINTAINED IN A CONDITION THAT WILL PREVENT TRACKING OR FLOWING OF SEDIMENT ONTO PUBLIC RIGHTS-OF-WAY. THIS MAY REQUIRE TOP DRESSING, REPAIR AND/OR CLEANOUT OF ANY MEASURES USED TO TRAP SEDIMENT.
2. WHEN NECESSARY, WHEELS SHALL BE CLEANED PRIOR TO ENTRANCE ONTO PUBLIC RIGHTS-OR-WAY.
3. WHEN WASHING IS REQUIRED, IT SHALL BE DONE ON AN AREA STABILIZED WITH CRUSHED STONE THAT DRAINS INTO AN APPROVED SEDIMENT TRAP OR SEDIMENT BASIN.
4. ALL MATERIALS SPILLED, DROPPED, OR TRACKED ONTO PUBLIC ROADS (INCLUDING T.G.C.E. AGGREGATE AND CONSTRUCTION MUD) SHALL BE REMOVED DAILY, OR MORE FREQUENTLY IF SO DIRECTED.
5. A SOIL TRACKING PREVENTION DEVICE (STPD) IS AN ACCEPTABLE ALTERNATIVE TO THIS DETAIL. REFERENCE FDOT INDEX 106 FOR DETAILS.

STANDARD CONSTRUCTION DETAIL
TEMPORARY GRAVEL
CONSTRUCTION ENTRANCE
REV. 12/08
FILE NAME: R27.DWG
DETAIL REF: R-27

Dewberry
Dewberry Engineers Inc.
800 NORTH MAGNOLIA AVE
ORLANDO, FL 32803
SUITE 1000
PHONE: 407.843.5120
ENGINEERING BUSINESS -8794

WESTPORT RESERVE
(PHASE 2B)

PORT ORANGE, FL

SEAL

7/1/2016

No.	DATE	BY	Description

REVISIONS

DRAWN BY	TFS
APPROVED BY	DMV
CHECKED BY	NPS
DATE	JANUARY 2016
DATUM	NAVD 88

TITLE

CITY ROAD/
DRAINAGE
DETAILS

PROJECT NO. 50079046 (CC 1)

C20

SHEET NO.

...\CC1-SF PH1 CityRoadDetails-03.dgn
3:49:50 PM

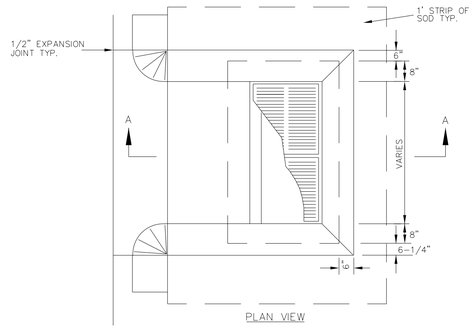

PLAN VIEW

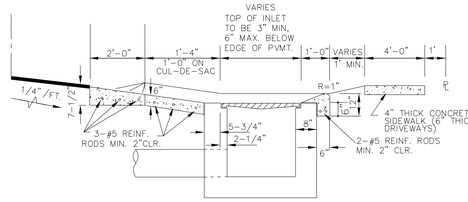

SECTION A-A

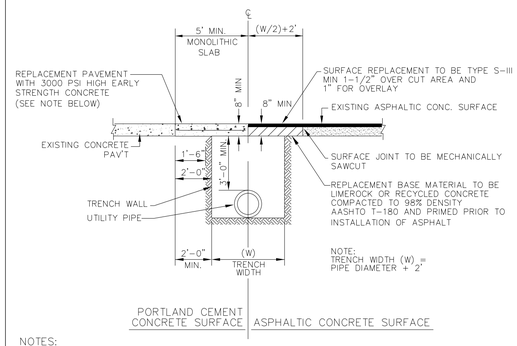

NOTES:

1. PAVING REPLACEMENT SHALL INCLUDE RAISING ALL MANHOLE FRAMES AND LIDS AND VALVE BOXES AND LIDS (AND SIMILAR APPURTENANCES) TO FINAL ELEVATION PRIOR TO RESURFACING
2. SUBBASE TO BE COMPACTED TO 98% MAXIMUM DENSITY AASHTO T-180
3. IN AREAS WHERE CONCRETE PAVEMENT IS TO BE UTILIZED, 3000 PSI - 28 DAY STRENGTH CONCRETE PAVEMENT MAY BE PERMITTED PROVIDED THAT THE SUBJECT AREA WILL REMAIN FREE OF VEHICULAR TRAFFIC FOR A MINIMUM OF 3 DAYS.

STORM DRAINAGE DESIGN AND CONSTRUCTION NOTES

ALL MATERIALS AND INSTALLATION METHODS USED FOR LAND DEVELOPMENT CODE REQUIRED IMPROVEMENTS FOR SUBDIVISIONS AND SITE PLANS SHALL BE IN CONFORMANCE WITH THE CITY, FDOT STANDARD SPECIFICATIONS FOR ROAD AND BRIDGE CONSTRUCTION (LATEST EDITION), AND THE FDOT ROADWAY AND TRAFFIC DESIGN STANDARDS (LATEST EDITION).

1. ALL STORM SEWERS AND CULVERTS LOCATED IN ROADWAY RIGHTS-OF-WAY AND ROADWAY EASEMENTS SHALL BE A MINIMUM OF CLASS III REINFORCED CONCRETE PIPE. OUTSIDE OF ROADWAY EASEMENTS AND R.O.W., PIPE MAY BE MADE OF ALTERNATE MATERIALS INCLUDING:
   A. SMOOTH INNER WALL HIGH DENSITY POLYETHYLENE (HDPE) IN ACCORDANCE WITH AASHTO M-294, AASHTO MP7, ASTM D3350 AND ASTM D2412 FOR SIZES UP TO 42" IN DIAMETER OR
   B. PVC IN ACCORDANCE WITH THE PROVISION NOTED IN THE "SEWER DETAILS" OF THESE SPECIFICATIONS.
2. ALL STORM SEWER PIPE JOINTS LOCATED IN ROADWAY RIGHTS-OF-WAY AND ROADWAY EASEMENTS SHALL BE ENTIRELY WRAPPED WITH FILTER FABRIC WITH A MINIMUM WIDTH OF 24" AND A MINIMUM OF 24" OVERLAP SECURED WITH PLASTIC OR STAINLESS BANDS. GASKETS ARE NOT PERMITTED AS AN EQUIVALENT SUBSTITUTE FOR MEETING THIS REQUIREMENT. THIS PRACTICE IS ENCOURAGED ON PRIVATE SITES ADDITIONALLY, ALL JOINTS SHALL BE RUBBER GASKETED FOR BOTH ROUND AND ELLIPTICAL PIPE.
3. DEPTH OF COVER MEASURED TO THE TOP OF PIPE (NOT INCLUDING THE BELL JOINT) SHALL BE A MINIMUM OF 1 FOOT. DEVIATION FROM THIS REQUIREMENT MAY BE ALLOWED BY INCREASING THE PIPE'S STRUCTURAL CAPACITY. THIS DEVIATION MUST BE SPECIFIED ON THE PLANS APPROVED FOR CONSTRUCTION AND SUBSEQUENTLY REFLECTED ON THE SHOP DRAWINGS AND AS-BUILT PLANS.
4. ALL STORM DRAINAGE PIPES LOCATED IN ROADWAY RIGHTS-OF-WAY AND ROADWAY EASEMENTS SHALL BE A MINIMUM OF FIFTEEN INCH (15") DIAMETER OR EQUIVALENT AND BE DESIGNED FOR A MINIMUM OF A TWENTY-FIVE (25) YEAR STORM OF TWENTY-FOUR (24) HOUR DURATION. STORM DRAINAGE PIPES SMALLER THAN 15" ARE PERMITTED ON PRIVATE SITE PLANS PROVIDING THAT MAINTENANCE SHALL BE PERFORMED BY THE OWNER.
5. STORM INLETS, MANHOLES, AND CATCH BASINS SHALL BE EITHER POURED IN PLACE OR PRECAST REINFORCED CONCRETE. STRUCTURES SHALL BE REQUIRED AT EACH CHANGE OF PIPE SIZE OR CHANGE IN PIPE DIRECTION. ALL STRUCTURES SHALL BE IN COMPLIANCE WITH ASTM C-478 AND SHALL HAVE 8" THICK WALLS. 6" THICK WALLS MAY BE PERMITTED PROVIDING THAT THE PLANS SPECIFY INCREASED REINFORCEMENT IN ACCORDANCE WITH FDOT STANDARD INDEX NO. 201 IN ADDITION, THIS REQUIREMENT MUST BE REFLECTED ON BOTH THE SHOP DRAWING AND AS-BUILT PLANS.
6. STORM INLETS SHALL BE SPACED IN SUCH A MANNER AS TO ACCEPT ONE HUNDRED (100) PERCENT OF THE DESIGN STORM RUNOFF WITHOUT IMPEDING THE FLOW OF TRAFFIC. FOR ROADWAY SECTIONS WITH DESIGN SPEEDS OF 45 MPH AND LESS AND WITHOUT FULL WIDTH SHOULDERS, SPREAD RESULTING FROM A RAINFALL INTENSITY OF FOUR INCHES (4") PER HOUR SHALL NOT EXCEED ONE-HALF OF THE TRAVEL LANE ADJACENT TO THE GUTTER. FOR SITE PLANS, INLET SPACING SHALL BE DESIGNED TO ACCEPT ONE HUNDRED (100) PERCENT OF THE RUNOFF FROM A RAINFALL INTENSITY OF FOUR INCHES (4") PER HOUR WITHOUT RESULTING IN PONDING OF WATER AROUND THE INLET.
7. RETENTION AREA WATER DEPTHS SHALL BE FOUR FEET(4') MINIMUM TO TWELVE FEET(12') MAXIMUM, MEASURED FROM THE N.W.L. (NORMAL WATER LEVEL)

STORM DRAINAGE DESIGN AND CONSTRUCTION NOTES (CONTD.)

8. FOR CONNECTIONS BETWEEN INLETS WITH PIPING 15" IN DIAMETER AND LARGER, THE MAXIMUM DISTANCES BETWEEN INLETS AND / OR CLEAN-OUT JUNCTION BOXES SHALL BE 300 FEET. CULVERTS SHALL BE SLOPED TO MAINTAIN A MINIMUM SELF-CLEANING VELOCITY OF 3 FEET PER SECOND USING A MANNING'S 'n' OF 0.012. SPACING FOR CLEAN-OUTS AND INLETS FOR SMALLER PIPING SHALL BE REDUCED AND EVALUATED ON A CASE BY CASE BASIS.
9. THE MAXIMUM PERMISSIBLE SLOPE OF ANY NEW SITE GRADING IS 3:1 (HORIZONTAL: VERTICAL). THIS LIMIT SHALL BE APPLIED TO ALL AREAS EXCEPT STORMWATER CONVEYANCE AND TREATMENT SYSTEMS WHICH HAVE A MAXIMUM SLOPE OF 4:1 (EXCEPT BELOW THE WATER TABLE WHERE SHARPER SLOPES ARE PERMISSIBLE.)
10. PIPED STORMWATER SYSTEMS SHALL HAVE A MINIMUM DRAINAGE MAINTENANCE EASEMENT WIDTH OF 20 FEET, AND MAY BE INCREASED DEPENDING UPON THE SIZE AND DEPTH OF PIPE.
11. NORMAL ROADSIDE SWALES ARE PERMITTED TO BE CONSTRUCTED TO A MAXIMUM DEPTH OF 18" BELOW THE OUTSIDE EDGE OF PAVEMENT OR CONCRETE CURB.
12. CONCRETE EROSION CONTROL MUST BE PROVIDED WHERE SWALES OR CULVERTS INTERCEPT DRAINAGE DITCHES.
13. LAKE INFLOW AND OUTLET STRUCTURES SHALL GENERALLY BE CONSTRUCTED WITH REINFORCED CONCRETE AND SHALL BE SUBJECT TO THE APPROVAL OF THE CITY. SKIMMERS FOR WET PONDS SHALL BE CONSTRUCTED SUCH THAT THE BOTTOM EXTENDS 6" BELOW THE NORMAL WATER LEVEL AND 6" ABOVE THE OVERFLOW. FOR DRY PONDS, THE SKIMMER BOTTOM SHALL BE SET 6" BELOW THE LOWEST OVERFLOW ELEVATION AND 6" ABOVE THE HIGHEST POINT OF OVERFLOW. ALL SKIMMERS SHALL BE CONSTRUCTED OF MINIMUM 1/4" THICK ALUMINUM OR FIBERGLASS ADEQUATELY SUPPORTED TO PREVENT DEFLECTION.
14. SOIL EROSION CONTROL MEASURES, SATISFACTORY TO THE ST. JOHNS RIVER WATER MANAGEMENT DISTRICT AND THE CITY, SHALL BE EMPLOYED DURING CONSTRUCTION.
15. THE CITY MAY REQUEST THAT THE DEVELOPER SUBMIT A REPORT BY A QUALIFIED HYDROLOGIS ON THE IMPACT THE LAKE WILL HAVE ON NEIGHBORING WATER TABLE ELEVATIONS BOTH DURING CONSTRUCTION AND AFTER LAKE COMPLETION. THE CITY MAY REQUIRE GROUNDWATER MONITORING DURING THE LAKE EXCAVATION.
16. ADEQUATE MAINTENANCE EASEMENTS OR RIGHTS-OF-WAY AS APPROVED BY THE CITY SHALL BE PROVIDED AROUND THE ENTIRE PERIMETER OF ALL LAKES AND ASSOCIATED OUTFALLS DISCHARGING INTO AND OUT OF LAKES. APPLICABLE CROSS SECTIONS SHALL BE INCLUDED ON FINAL DEVELOPMENT PLANS.
17. DEVELOPMENT PLANS FOR ALL STORMWATER MANAGEMENT SYSTEMS SHALL CONTAIN POP-OFF DATA (OVERFLOW), BOTTOM ELEVATION, NORMAL WATER LEVELS, MEAN ANNUAL SEASONAL HIGH WATER TABLE ELEVATION, TREATMENT VOLUME AND CORRESPONDING ELEVATION, 100 YEAR HIGH WATER LEVELS, AND THE DESIGN TAILWATER ELEVATION (IF APPLICABLE).

STORM DRAINAGE DESIGN AND CONSTRUCTION NOTES (CONTD.)

18. IN GENERAL, ALL RETENTION / DETENTION SITES MUST BE CONSTRUCTED ON ALL PROJECTS PRIOR TO ANY ROAD, PARKING LOT, OR BUILDING CONSTRUCTION COMMENCING OR AS CURRENT PERMIT CONDITIONS DICTATE. SEWER AND WATER MAINS MAY BE INSTALLED PRIOR TO RETENTION/DETENTION SITE CONSTRUCTION IF DEWATERING IS NOT REQUIRED.
19. THE CONTRACTOR SHALL BE RESPONSIBLE TO OBTAIN ANY AND ALL DEWATERING PERMITS THAT MAY BE REQUIRED.
20. WHEN CULVERTS ARE INSTALLED TO MAINTAIN THE FLOW OF EXISTING DRAINAGE WAYS WHERE NEWLY PROPOSED ROADS WOULD OTHERWISE SEVER THE DRAINAGE WAY, THEN CULVERTS CROSSING RIGHTS-OF-WAY SHALL EXTEND FROM RIGHT-OF-WAY LINE TO RIGHT-OF-WAY LINE UNDER THE ROADWAY. CULVERTS SHALL BE DESIGNED TO ACCOMODATE THE FLOW FROM THE 100 YEAR - 24 HOUR STORM EVENT WITHOUT FLOODING ADJACENT PROPERTY OR SURCHARGING THE SAID ROADWAY.
21. IT SHALL BE THE RESPONSIBILITY OF THE CONTRACTOR TO REVIEW AND MAINTAIN A COPY OF THE SJRWMD PERMIT AND THE NPDES PERMIT AT THE CONSTRUCTION SITE, AND ABIDE BY ALL CONDITIONS OF THE PERMIT.
22. LANDSCAPE PLANS SHALL CLEARLY DEPICT THE DESIGN LOCATION OF PLANTINGS RELATIVE TO THE LOCATION OF PUBLIC UTILITIES AND STORMWATER INFRASTRUCTURE IN ORDER TO EVALUATE POTENTIAL CONFLICTS.

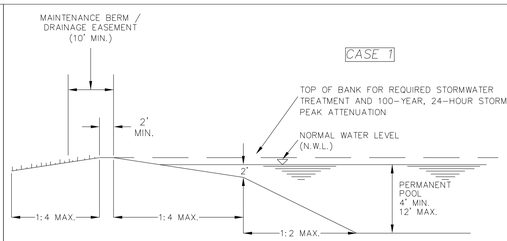

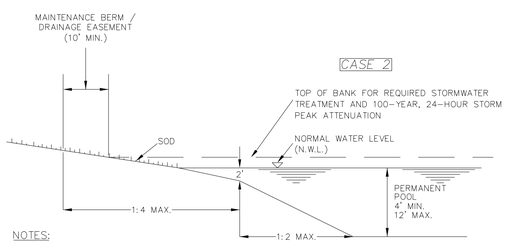

NOTES:

1. SOD IS TO BE PLACED TO N.W.L.
2. A PLANTED LITTORAL ZONE IS NOT PERMISSIBLE FOR SLOPES EXCEEDING 6:1.
3. AS AN OPTION TO A LITTORAL ZONE, THE DESIGNER CAN EITHER:
   A) PROVIDE AN ADDITIONAL 50% OF THE PERMANENT POOL VOLUME, AS REQUIRED, OR
   B) PROVIDE PRETREATMENT OF THE STORMWATER PRIOR TO ENTERING THE WET DETENTION POND.
4. CASE 1 BERM SHALL REQUIRE THE INSTALLATION OF IMPERVIOUS SOILS OR OTHER METHODS TO PREVENT TRANSMISSION OF WATER.

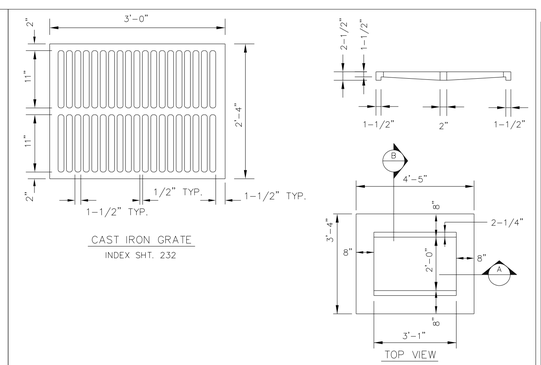

CAST IRON GRATE
INDEX SHT. 232

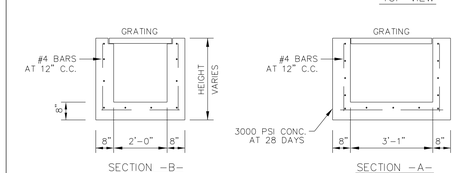

SECTION -B- SECTION -A-

NOTE:

- 6" THICK WALLS MAY BE PERMITTED, PROVIDING THAT THE INCREASED REINFORCEMENT IN ACCORDANCE WITH FDOT STANDARD INDEX NO. 201 IS INSTALLED. THIS MUST BE REFLECTED ON THE DESIGN PLANS, SHOP DRAWINGS, AND AS-BUILTS.

F.D.O.T. TYPE C INLET
INDEX SHT. 232

REQUIREMENTS FOR AS-BUILT DRAWINGS

IN ORDER TO ENSURE THAT NEW SUBDIVISIONS AND SITE PLANS ARE CONSTRUCTED SUBSTANTIALLY IN ACCORDANCE WITH CITY REGULATIONS AND THE APPROVED DRAWINGS, THE FOLLOWING INFORMATION IS REQUIRED ON ALL SUBDIVSION AS-BUILT DRAWINGS.

1. INDIVIDUAL PLAN AND PROFILE SHEETS FOR ALL ROADS AND SANITARY SEWER LINES, SHOWING MANHOLES, INLETS, AND PIPE CROSSINGS. PLAN AND PROFILE SHEETS SHALL SHOW SANITARY LINES AND ALL OTHER BURIED UTILITIES THAT CROSS SEWER LINES, AND ANY THAT PARALLEL AND ARE WITHIN TEN FEET OF SANITARY SEWER LINES. PLAN VIEWS SHALL BE DRAWN AT A SCALE OF ONE (1) INCH EQUAL TO FORTY (40) FEET HORIZONTAL. PROFILES SHALL BE DRAWN AT ONE (1) INCH EQUAL TO FOUR (4) FEET VERTICAL.
2. PAVEMENT AND CURB WIDTHS SHALL BE VERIFIED AND DIMENSIONED FOR EACH STREET AT EACH BLOCK. (FOR SUBDIVISIONS) AND AS APPROPRIATE TO CONFIRM PAVING LIMITS (ON SITE PLANS).
3. ALL RADII AT INTERSECTIONS SHALL BE VERIFIED AND DIMENSIONED. THIS INFORMATION IS TO BE CLEARLY INDICATED ON THE AS-BUILT.
4. ROADWAY ELEVATIONS SHALL BE RECORDED AT ALL GRADE CHANGES, 100' INTERVALS LONG ROADWAY, AND OTHER INTERVALS AS NEEDED ALONG ALL STREETS. STREET CENTERLINE AND CURB INVERT ELEVATIONS SHALL BE RECORDED AS NOTED. THE AS-BUILT CENTERLINE PROFILE OF ALL STREETS SHALL ALSO BE SHOWN ON THE PLAN AND PROFILE SO IT MAY BE COMPARED TO THE DESIGN PROFILE GRADE LINES. IN THE EVENT THAT THE AS-BUILT CENTERLINE LONGITUDINAL GRADE DOES NOT MEET THE CITY MINIMUM STANDARDS, ADDITIONAL LONGITUDINAL GRADES OF THE ADJACENT CURBING AND SIMILAR ROADWAY CROSS-SECTION SURVEYS TO VERIFY THE CORRECT CROSS SLOPE, SHALL BE REQUIRED TO VERIFY THAT THE SYSTEM WILL FUNCTION AS ORIGINALLY DESIGNED.
5. STORM DRAINAGE STRUCTURES SHALL BE LOCATED AND / OR DIMENSIONED FROM CENTERLINES OR LOT LINES AS APPROPRIATE.
6. STORM DRAINAGE PIPE INVERT AND INLET ELEVATIONS SHALL BE RECORDED AND CLEARLY DENOTED AS AS-BUILT INFORMATION. DESIGN ELEVATIONS SHALL BE CROSSED OUT AND AS-BUILT INFORMATION WRITTEN NEXT TO IT.
7. STORM DRAINAGE PIPE MATERIAL, LENGTH, AND SIZE SHALL BE MEASURED AND / OR VERIFIED. THIS INFORMATION IS TO BE CLEARLY INDICATED AS BEING AS-BUILT INFORMATION.
8. ALL APPLICABLE TOPOGRAPHIC INFORMATION PERTINENT TO THE ON-SITE DRAINAGE SYSTEM, SUCH AS DITCHES, SWALES, LAKES, CANALS, ETC. THAT ARE DEEMED NECESSARY BY THE CITY TO VERIFY THE FUNCTIONAL PERFORMANCE OF THE STORMWATER SYSTEM, SHALL BE NOTED. NORMALLY, RECORDING ELEVATIONS EVERY 100 FEET AT THE TOP OF BANK AND TOE OF SLOPE WILL BE REQUIRED. MEASUREMENTS SHALL BE TAKEN AND RECORDED IN ORDER TO ACCURATELY TIE DOWN THESE FEATURES TO THE ROADWAY CENTERLINES AND TO PLAT LINES WHENEVER POSSIBLE, CONTOUR LINES SHALL BE UTILIZED TO GRAPHICALLY DESCRIBE THESE TOPOGRAPHIC FEATURES.
9. RETENTION AREAS SHALL HAVE THEIR TOP-OF BANK AND BOTTOM ELEVATIONS RECORDED. ACTUAL MEASUREMENTS SHALL BE TAKEN AND DIMENSIONS RECORDED OF THE SIZE OF ALL RETENTION AREAS. MEASUREMENTS SHALL BE DONE FROM TOP-OF-BANK TO TOP-OF-BANK WITH SIDE SLOPES INDICATED. SEPARATE CALCULATIONS SHALL BE SUBMITTED TO INDICATE REQUIRED AND PROVIDED RETENTION VOLUMES.
10. ACTUAL MATERIALS USED AND ELEVATIONS AND DIMENSIONS OF OVERFLOW WEIR STRUCTURES AND SKIMMERS SHALL BE NOTED ON THE AS-BUILT.
11. STORM DRAINAGE SWALE CENTERLINES SHALL BE LOCATED AND ELEVATIONS OF FLOW LINE AND TOP OF BANK SHALL BE RECORDED EVERY 100 FEET. SIDE SLOPES SHALL ALSO BE INDICATED.

STANDARD CONSTRUCTION DETAIL STORM INLET APRON REV. 12/08	FILE NAME: ST1.DWG	DETAIL REF: ST-1	
STANDARD CONSTRUCTION DETAIL PAVEMENT TRENCH RESTORATION REV. 12/08	FILE NAME: ST3.DWG	DETAIL REF: ST-3	
STANDARD CONSTRUCTION DETAIL STORM DRAINAGE DESIGN AND CONSTRUCTION NOTES REV. 12/08	FILE NAME: ST4.DWG	DETAIL REF: ST-4	
STANDARD CONSTRUCTION DETAIL STORM DRAINAGE DESIGN AND CONSTRUCTION NOTES REV. 12/08	FILE NAME: ST5.DWG	DETAIL REF: ST-5	
STANDARD CONSTRUCTION DETAIL STORM DRAINAGE DESIGN AND CONSTRUCTION NOTES REV. 12/08	FILE NAME: ST6.DWG	DETAIL REF: ST-6	
STANDARD CONSTRUCTION DETAIL WET RETENTION POND REV. 12/08	FILE NAME: ST10.DWG	DETAIL REF: ST-10	
STANDARD CONSTRUCTION DETAIL TYPE "C" STORM INLET REV. 12/08	FILE NAME: ST11.DWG	DETAIL REF: ST-11	
STANDARD CONSTRUCTION DETAIL REQUIREMENTS FOR AS-BUILTS DRAWINGS REV. 12/08	FILE NAME M1.DOC	DETAIL REF: M-1	

Dewberry

Dewberry Engineers Inc.
800 NORTH MAGNOLIA AVE
ORLANDO, FL 32803
SUITE 1000
PHONE: 407.843.5120
ENGINEERING BUSINESS -8794

WESTPORT RESERVE (PHASE 2B)

PORT ORANGE, FL

SEAL

7/1/2016

No.	DATE	BY	Description

REVISIONS

DRAWN BY TFS
APPROVED BY DMV
CHECKED BY NPS
DATE JANUARY 2016
DATUM NAVD 88

TITLE

CITY ROAD/ DRAINAGE DETAILS

PROJECT NO. 50079046 (CC 1)

C21

SHEET NO.

...\CC1-SF PH1 CityStormDetails-01.dgn 3:49:55 PM

REQUIREMENTS FOR AS-BUILT DRAWINGS (CONT'D)

IN ORDER TO ENSURE THAT NEW SUBDIVISIONS AND SITE PLANS ARE CONSTRUCTED SUBSTANTIALLY IN ACCORDANCE WITH CITY REGULATIONS AND THE APPROVED DRAWINGS, THE FOLLOWING INFORMATION IS REQUIRED ON ALL SUBDIVSION AS-BUILT DRAWINGS.

12. SANITARY SEWER MANHOLES SHALL BE VERIFIED AND DIMENSIONED FROM STREET CENTERLINES OR LOT LINES AS APPROPRIATE. ALL RIM AND INVERT ELEVATIONS SHALL BE VERIFIED AND RECORDED. THIS INFORMATION SHALL BE CLEARLY INDICATED AS BEING AS-BUILT INFORMATION. DESIGN ELEVATIONS SHALL BE CROSSED OUT AND AS-BUILT INFORMATION WRITTEN NEXT TO IT.
13. FOR SUBDIVISIONS, PROPOSED DESIGN FINISHED FLOOR ELEVATIONS SHALL APPEAR ON ALL SUBDIVISION LOTS ON THE APPROPRIATE PLAN AND PROFILE SHEET AS WELL AS ON THE MASTER DRAINAGE PLAN. SANITARY SEWER LINE LENGTHS, SIZES, MATERIAL, ETC., SHALL BE VERIFIED AND RECORDED. THIS INFORMATION IS TO BE CLEARLY INDICATED AS BEING AS-BUILT INFORMATION.
14. SEWER LATERALS SHALL BE VERIFIED AND RECORDED AT THEIR CLEAN-OUT LOCATIONS. STATIONING AND OFFSET DISTANCES SHALL BE MEASURED FROM DOWNSTREAM MANHOLES TOWARDS UPSTREAM MANHOLES.
15. LIFT STATIONS AND FORCE MAINS SHALL BE VERIFIED AND DIMENSIONED FROM STREET CENTERLINES OR LOT LINES AS APPROPRIATE. FORCE MAIN DEPTH AND LOCATION INCLUDING VALVES WILL BE PROVIDED AND TIED TO PERMANENT ABOVE GRADE FEATURES. DIMENSIONAL AND ELEVATION INFORMATION INDICATED ON THE APPROVED PLAN SHALL BE VERIFIED AND RECORDED. THIS INFORMATION SHALL BE CLEARLY INDICATED AS BEING AS-BUILT INFORMATION. BURIED ELECTRICAL SERVICE LINE SHALL BE CLEARLY DIMENSIONED, LOCATED, AND LABELED.
16. CURB CUTS OR METAL TABS, USED TO MARK SEWER LATERALS, WATER SERVICES AND WATER VALVES, SHALL BE VERIFIED FOR PRESENCE AND ACCURACY OF LOCATION.
17. POTABLE AND RECLAIMED WATER MAIN LINES SHALL BE DIMENSIONED OFF THE BACK OF CURB, OR EDGE OF PAVEMENT IF NO CURB IS PRESENT. WATER MAIN LINE MATERIAL SIZE, LENGTH AND DEPTH PLACED SHALL ALSO BE NOTED. LOCATIONS OF VALVES, TEES AND CROSSES SHALL BE TIED TO (3) THREE PERMANENT ABOVE GRADE FEATURES. THIS INFORMATION SHALL BE CLEARLY INDICATED AS BEING AS-BUILT INFORMATION.
18. POTABLE AND RECLAIMED WATER VALVES, TEES, BENDS, ALL SERVICES, AND FIRE HYDRANTS SHALL BE LOCATED BY TYING THEM TO SANITARY SEWER MANHOLES. SIMILARLY, FORCE MAIN VALVES, TEES, AND BENDS SHALL BE LOCATED IN THE SAME MANNER. STATIONING AND OFFSET DISTANCES SHALL BE MEASURED FROM DOWNSTREAM MANHOLES TO UPSTREAM MANHOLES.
19. FOR PERPENDICULAR CROSSINGS OF STORMWATER, SANITARY SEWER, POTABLE WATER, OR RECLAIMED WATER, THE AS-BUILT PLANS SHALL CLEARLY INDICATE WHICH UTILITIES ARE LOCATED OVER OR UNDER OTHER UTILITIES, AS NECESSARY.
20. ANY SPECIAL FEATURES SUCH AS, CONCRETE FLUMES, LAKE BANKS, WALLS, FENCING, ETC., WHICH WERE A PART OF THE APPROVED CONSTRUCTION DRAWINGS SHOULD ALSO BE LOCATED AND DIMENSIONED.
21. IF AN APPROVED SUBDIVISION PLAT OR SITE PLAN SHOWS A CONSERVATION EASEMENT, THE PROJECT SURVEYOR SHALL PROVIDE THE EXACT LOCATION OF THE SPECIMEN TREE(S) FROM THE RIGHT-OF-WAY OR PROPERTY LINES AND PROPOSED EASEMENT BOUNDARIES ON THE AS-BUILT DRAWING. THE AS-BUILT LOCATION OF THESE TREES WILL HELP VERIFY THE SUFFICIENCY OF THE CONSERVATION EASEMENT PRIOR TO PLAT RECORDING OR CERTIFICATE OF OCCUPANCY.

STANDARD CONSTRUCTION DETAIL
REQUIREMENTS FOR AS-BUILTS DRAWINGS

FILE NAME: M1.DOC
DETAIL REF: M-1
REV. 12/08

REQUIREMENTS FOR AS-BUILT DRAWINGS (CONT'D)

IN ORDER TO ENSURE THAT NEW SUBDIVISIONS AND SITE PLANS ARE CONSTRUCTED SUBSTANTIALLY IN ACCORDANCE WITH CITY REGULATIONS AND THE APPROVED DRAWINGS, THE FOLLOWING INFORMATION IS REQUIRED ON ALL SUBDIVSION AS-BUILT DRAWINGS.

22. WHEN STORMWATER, POTABLE WATER, RECLAIMED WATER, OR SANITARY SEWER IMPROVEMENTS ARE LOCATED WITHIN AN EASEMENT, THE AS-BUILT DRAWING SHALL ACCURATELY DEPICT THE LOCATION OF THE EASEMENT ITSELF AS WELL AS THE EXACT LOCATION OF THE IMPROVEMENTS WITHIN THE EASEMENT. THIS IS REQUIRED IN ORDER TO VERIFY THAT THE IMPROVEMENTS HAVE BEEN PROPERLY LOCATED AND TO ENSURE THAT FUTURE SUBSURFACE EXCAVATION TO PERFORM REMEDIAL REPAIR CAN BE ACCOMPLISHED WITHOUT DISTURBANCE BEYOND THE EASEMENT. SUCH DOCUMENTATION AND THE ASSOCIATED PROPOSED EASEMENT DOCUMENT WITH LEGAL DESCRIPTION SHALL BE SUBMITTED FOR CITY REVIEW AND APPROVAL PRIOR TO RECORDING OF SAID EASEMENT. UPON CITY APPROVAL, THE EASEMENT SHALL BE RECORDED VIA A SEPARATE LEGAL INSTRUMENT AND SHALL NOT BE INCLUDED AS PART OF HOMEOWNER COVENANTS & RESTRICTIONS.

NOTE: 1. REFERENCES TO WATER SHALL MEAN BOTH POTABLE AND RECLAIMED WATER.

STANDARD CONSTRUCTION DETAIL
REQUIREMENTS FOR AS-BUILTS DRAWINGS

FILE NAME: M1.DOC
DETAIL REF: M-1
REV. 12/08

PLAN SHEET REQUIREMENTS:

1. PLANS SUBMITTED TO THE COMMUNITY DEVELOPMENT DEPARTMENT FOR REVIEW INCLUDING SITE PLANS, SUBDIVISIONS, PLANNED UNIT DEVELOPMENTS, AND OTHER DEVELOPMENTS, SHALL CONSIST OF AT LEAST THE FOLLOWING ITEMS:
   a. INDEX PAGE WITH AREA MAP SHOWING PROJECT LIMITS
   b. PLAN AND PROFILE SHEETS, AS APPROPRIATE
   c. PLAN SHEETS, AS APPROPRIATE
   d. PROFILE SHEETS, AS APPROPRIATE
   e. DETAIL SHEETS, AS APPROPRIATE
   f. OTHER INFORMATION, AS REQUIRED BY CODE
2. THEY SHALL BE DRAWN ON STANDARD 24" X 36" SHEETS. THE PLAN AND PROFILE MAY BE EITHER SINGLE OR DOUBLE AS THE INDIVIDUAL PROJECT DICTATES. EACH SHEET SHALL CONTAIN AN APPROPRIATE TITLE BLOCK SHOWING THE FOLLOWING INFORMATION:
   a. THE NAME OF THE PROJECT
   b. THE NAME, ADDRESS, AND PHONE NUMBER OF THE COMPANY PREPARING THE DRAWINGS
   c. THE NAME, ADDRESS, AND PHONE NUMBER OF THE ENGINEER, SURVEYOR, OR LANDSCAPE ARCHITECT AS APPROPRIATE.
   d. THE SHEET NUMBER
   e. THE DRAWING NUMBER
   f. THE DATE
   g. ANY REVISIONS AND DATE
   h. OTHER INFORMATION AS APPROPRIATE
3. THE STANDARD SHEET SHALL BE LAID OUT AS SHOWN BELOW, WITH EACH SHEET CONTAINING A NORTH ARROW AND SCALE.

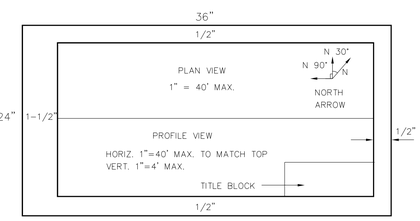

STANDARD CONSTRUCTION DETAIL
PLAN SHEET REQUIREMENTS

FILE NAME: M2.DWG
DETAIL REF: M-2
REV. 12/08

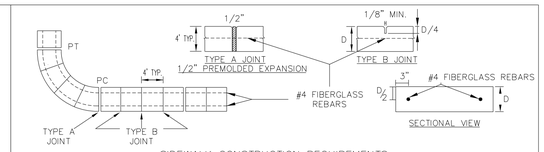

SIDEWALK CONSTRUCTION REQUIREMENTS

1. ALL CONCRETE SIDEWALKS & BIKE PATHS IN PUBLIC RIGHT-OF-WAY, PRIVATE RIGHT-OF-WAY AND ON NON-RESIDENTIAL SITES SHALL CONTAIN FIBERGLASS REINFORCMENT EXCEPT REPAIRS TO NON-REINFORCED EXISTING SIDEWALKS. FIBERGLASS REINFORCEMENT SHALL NOT BE REQUIRED ON PRIVATE RESIDENTIAL SIDEWALKS.
2. SIDEWALKS, BIKEPATHS, RAMPS, AND DRIVEWAY APRONS SHALL BE CONSTRUCTED OF PLAIN PORTLAND CEMENT CONCRETE WITH FIBERGLASS REINFORCEMENT, HAVING A MAXIMUM SLUMP OF 3 INCHES, A MINIMUM DEVELOPED COMPRESSIVE STRENGTH OF 3000 P.S.I. IN 28 DAYS, AND A MINIMUM UNIFORM THICKNESS OF 4 INCHES WHERE INTENDED SOLELY FOR PEDESTRIAN TRAFFIC, AND 6 INCHES THICK WHERE MOTOR VEHICLES ARE LIKELY TO CROSS.
3. 2-#4 CONTINOUS FIBERGLASS BARS (6" OVERLAP REQUIRED) SHALL BE INSTALLED LONGITUDINALLY. 3" FROM THE EDGE OF ALL BIKEPATHS AND SIDEWALKS, TO CONTROL DIFFERENTIAL MOVEMENT AT JOINTS.
4. SIDEWALKS AND BIKEPATHS SHALL BE PLACED PARALLEL TO, AND ONE FOOT WITHIN THE RIGHT-OF-WAY LINE EXCEPT THAT THE CITY MAY APPROVE DEVIATIONS TO SAVE SPECIMEN TREES PROVIDED THAT THE SIDEWALK REMAINS WITHIN THE RIGHT-OF-WAY OR AN APPROVED SIDEWALK EASEMENT ABUTTING THE RIGHT OF WAY. SIDEWALKS AND BIKE PATHS SHOULD BE LOCATED AT LEAST 4 FEET FROM THE EDGE OF THE STREET PAVEMENT UNLESS OTHERWISE APPROVED BY THE CITY.
5. THE TOP OF THE CONCRETE SHALL BE AT AN ELEVATION NO LOWER THAN THE CROWN OF THE ADJACENT ROADWAY, AND NO HIGHER THAN 6 INCHES ABOVE THE CROWN UNLESS APPROVED BY THE CITY TO MAKE A MORE NATURAL TRANSITION WITH THE ADJACENT LAND.
6. ISOLATION JOINTS (TYPE A JOINTS) SHALL BE PROVIDED BETWEEN EXISTING SLABS OR STRUCTURES AND FRESH CONCRETE, TO SEPARATE PEDESTRIAN SECTIONS FROM SECTIONS WHICH WILL ENCOUNTER VEHICLE TRAFFIC, TO SEPARATE FRESH PLACEMENT FROM CONCRETE WHICH HAS SET FOR MORE THAN 60 MINUTES, AND NO FARTHER APART THAN 100 FEET IN SIDEWALKS AND BIKEPATHS. JOINT MATERIAL SHALL BE PREFORMED JOINT FILLER MEETING F.D.O.T. SPECIFICATIONS.
7. CONTROL JOINTS (TYPE B JOINTS) SHALL BE TOOLED INTO THE FRESH CONCRETE TO A DEPTH EQUAL TO 1/4 THE SLAB THICKNESS AND SPACED APART A DISTANCE EQUAL TO THE WIDTH OF THE SLAB OR 4 FEET WHICHEVER IS GREATEST.
8. THE SLAB SURFACE SHALL BE BROOM FINISHED TO BE SLIP RESISTANT, AND SHALL MATCH AS CLOSELY AS POSSIBLE THE FINISH OF EXISTING ADJACENT SLABS AND ALL EDGES SHALL BE TOOLED TO ELIMINATE SHARP CORNERS.
9. THE BEARING SUBSURFACE SHALL HAVE ALL ORGANIC, LOOSE, AND DELETERIOUS MATTER REMOVED, AND THE REMAINING CLEAN SOIL SHALL BE SMOOTH, SOUND, AND SOLID. ANY FILL MATERIAL SHALL BE COMPACTED TO A MINIMUM PROCTOR FIELD DENSITY OF 95 PERCENT.
10. ALL CONCRETE WORK IN THE RIGHT-OF-WAY SHALL BE INSPECTED BY THE CITY AFTER THE SUBSOIL IS PREPARED AND THE FORMS ARE SET, BUT BEFORE THE CONCRETE PLACEMENT BEGINS.
11. THE CONTRACTOR SHALL BE RESPONSIBLE FOR PROTECTING THE FINISHED SLAB FROM ALL DAMAGE AND VANDALISM UNTIL THE CITY ACCEPTS OR APPROVES THE SLAB, AFTER WHICH TIME THE OWNER OF THE ABUTTING LAND SHALL BE RESPONSIBLE FOR THE SLAB IN ACCORDANCE WITH THE CITY CODE. ANY SLAB SECTION DAMAGED OR VANDALIZED PRIOR TO ACCEPTANCE OR APPROVAL SHALL BE CUT OUT BETWEEN JOINTS AND REPLACED. REPAIRS ARE NOT ACCEPTABLE.
12. SIDEWALKS LOCATED WITHIN THE RIGHT-OF-WAY SHALL NOT BE TINTED, STAINED, COLORED, OR COATED.
13. ALL FORMS SHALL BE REMOVED PRIOR TO ACCEPTANCE OR APPROVAL AND THE DISTURBED GROUND SHALL BE BACKFILLED, REGRADED, AND SODDED SO THAT THE WEAR SURFACE OF THE CONCRETE IS REASONABLY FLUSH WITH THE ADJACENT GRADE.

STANDARD CONSTRUCTION DETAIL
SIDEWALK CONSTRUCTION REQUIREMENTS

FILE NAME: M3.DWG
DETAIL REF: M-3
REV. 12/08

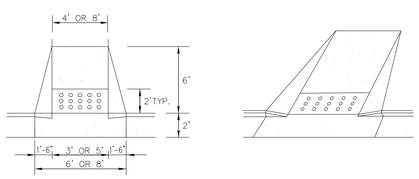

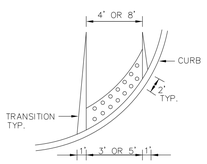

NOTES:

1. RAMP LOCATIONS ARE TO BE COORDINATED WITH AND IN CONFORMANCE WITH CROSSWALK MARKING DETAILS SHOWN IN THE PLANS.
2. CURBED RAMPS SHALL HAVE FLARED SIDES WITH A MAXIMUM SLOPE OF 12:1.
3. NO CURB TRANSITION IS NEEDED FOR MIAMI CURBS.
4. ALL RAMPS SHALL BE CONSTRUCTED IN ACCORDANCE WITH FDOT INDEX NO. 304 AND ACCESSIBILITY REQUIREMENTS IN ACCORDANCE WITH THE AMERICAN DISABILITIES ACT.
5. CURB RAMPS SUBJECT TO THE DEPARTMENT OF TRANSPORTATION REGULATION CFR 37.21 SHALL HAVE A DETECTABLE WARNING.

STANDARD CONSTRUCTION DETAIL
SIDEWALK AND BIKEPATH RAMP
(WITHIN RIGHT-OF-WAY)

FILE NAME: M4.DWG
DETAIL REF: M-4
REV. 2/13

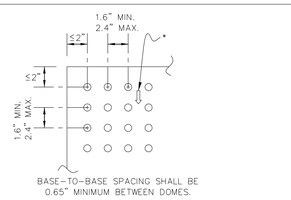

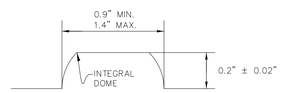

NOTES:

1. ON RAMPS THAT ARE PERPENDICULAR WITH THE CURB LINE, THE DOME PATTERN SHALL BE IN-LINE WITH THE DIRECTION OF TRAVEL. ON RAMPS INTERSECTING CURBS ON A RADIUS, THE DOME PATTERN SHALL BE IN-LINE WITH THE DIRECTION OF TRAVEL TO THE EXTENT PRACTICAL.
2. CURB RAMPS SUBJECT TO THE DEPARTMENT OF TRANSPORTATION REGULATION CFR 37.21 SHALL HAVE A DETECTABLE WARNING.

STANDARD CONSTRUCTION DETAIL
SIDEWALK AND BIKEPATH RAMP

FILE NAME: M5.DWG
DETAIL REF: M-5
REV. 2/13

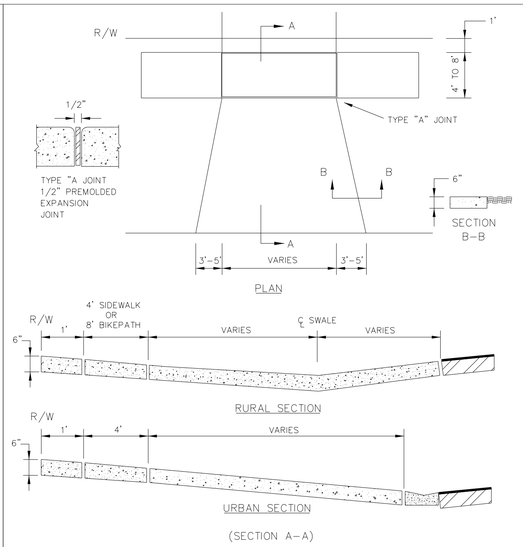

NOTES:

1. DRIVEWAY APRON BASE TO BE COMPACTED AND TESTED TO 98% DENSITY WITH MINIMUM L.B.R. 40 BASED ON AASHTO T-180 MODIFIED PROCTOR TEST.
2. CONCRETE DRIVEWAY APRON TO BE 28 DAY, 3000 P.S.I.

STANDARD CONSTRUCTION DETAIL
DRIVEWAY APRON

FILE NAME: M6.DWG
DETAIL REF: M-6
REV. 12/08

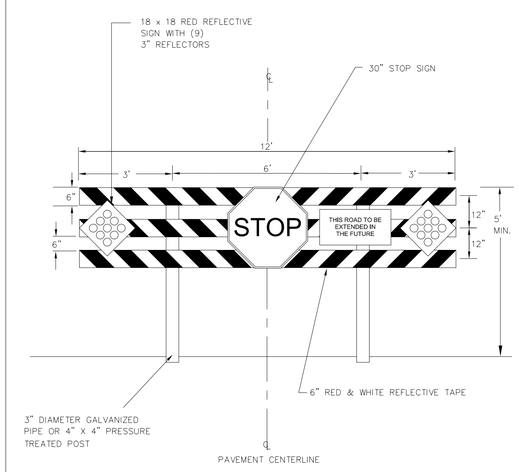

STANDARD CONSTRUCTION DETAIL
ROAD BARRICADE

FILE NAME: M9.DWG
DETAIL REF: M-9
REV. 12/08

Dewberry

Dewberry Engineers Inc.
800 NORTH MAGNOLIA AVE
ORLANDO, FL 32803
SUITE 1000
PHONE: 407.843.5120
ENGINEERING BUSINESS -8794

WESTPORT RESERVE
(PHASE 2B)

PORT ORANGE, FL

SEAL

7/1/2016

No.	DATE	BY	Description

REVISIONS

DRAWN BY	TFS
APPROVED BY	DMV
CHECKED BY	NPS
DATE	JANUARY 2016
DATUM	NAVD 88

TITLE

CITY ROAD/ DRAINAGE DETAILS

PROJECT NO. 50079046 (CC 1)

C22

SHEET NO.

...\CC1-SF PH1 CityMiscDetails-01.dgn
3:50:04 PM

ACCESSIBLE PARKING SPACES SHALL BE PROVIDED IN ACCORDANCE WITH CURRENT FLORIDA STATUTES, INCLUDING THE FOLLOWING DETAILS:

1. ANY COMMERCIAL REAL ESTATE PROPERTY OR RESIDENTIAL MODEL CENTERS OWNER OFFERING PARKING FOR THE GENERAL PUBLIC SHALL PROVIDE SPECIALLY DESIGNED AND MARKED MOTOR VEHICLE PARKING SPACES FOR THE EXCLUSIVE USE OF PHYSICALLY DISABLED PERSONS WHO HAVE BEEN ISSUED PARKING PERMITS PURSUANT TO STATE LAW.
2. DIAGONAL OR PERPENDICULAR PARKING SPACES SHALL BE A MINIMUM OF 12 FEET WIDE (SEE FIGURE 1).
3. PARALLEL PARKING SPACES SHALL BE LOCATED EITHER AT THE BEGINNING OR END OF A BLOCK OR ADJACENT TO ALLEY ENTRANCES. CURBS ADJACENT TO SUCH SPACES SHALL BE OF A HEIGHT WHICH WILL NOT INTERFERE WITH THE OPENING AND CLOSING OF MOTOR VEHICLE DOORS.
4. EACH SUCH PARKING SPACE SHALL BE CONSPICUOUSLY OUTLINED IN BLUE PAINT AND SHALL BE POSTED AND MAINTAINED WITH A PERMANENT, ABOVE-GRADE SIGN BEARING THE INTERNATIONAL SYMBOL OF ACCESSIBILITY AND THE CAPTION PARKING BY DISABLED PERMIT ONLY, AND AN ADDITIONAL SIGN STATING THE PENALTY FOR ILLEGAL USE OF THE SPACE (SEE DETAIL M-11). SUCH SIGNS SHALL NOT BE OBSCURED BY A VEHICLE PARKED IN THE SPACE. ALL ACCESSIBLE PARKING MUST BE SIGNED AND MARKED IN ACCORDANCE WITH THE STANDARDS ADOPTED BY THE FLORIDA DEPARTMENT OF TRANSPORTATION.
5. ALL SPACES SHALL HAVE A SIXTY INCH (60") WIDE ADJACENT ACCESS AISLE (SEE DETAIL M-11). PARKING ACCESS AISLES SHALL BE PART OF THE ACCESSIBLE ROUTE TO THE BUILDING OR FACILITY ENTRANCE. TWO ACCESSIBLE PARKING SPACES MAY SHARE A COMMON ACCESS AISLE. PARKED VEHICLE OVERHANGS SHALL NOT REDUCE THE CLEAR WIDTH OF AN ACCESSIBLE CIRCULATION ROUTE.
6. ALL SPACES SHALL HAVE AN ACCESSIBLE CURB-RAMP OR CURB-CUT TO ALLOW ACCESS TO THE BUILDING SERVED. IT SHALL BE LOCATED SO THAT USERS WILL NOT BE COMPELLED TO WHEEL BEHIND PARKED VEHICLES, EXCEPT BEHIND HIS OR HER OWN VEHICLE.
7. THE MINIMUM NUMBER OF SUCH PARKING SPACES SHALL COMPLY WITH THE FOLLOWING TABLE:

TOTAL PARKING IN LOT	REQUIRED NUMBER OF ACCESSIBLE SPACES
UP TO 25	1
26 TO 50	2
51 TO 75	3
76 TO 100	4
101 TO 150	5
151 TO 200	6
201 TO 300	7
301 TO 400	8
401 TO 500	9
501 TO 1000	2% TOTAL
OVER 1000	20 PLUS 1 FOR EACH 100, (OR FRACTION THEREOF) OVER 1000

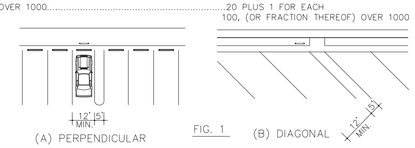

(A) PERPENDICULAR — FIG. 1 — (B) DIAGONAL

STANDARD CONSTRUCTION DETAIL
ACCESSIBLE PARKING SPACES
REV. 2/13
FILE NAME: M10.DWG
DETAIL REF: M-10

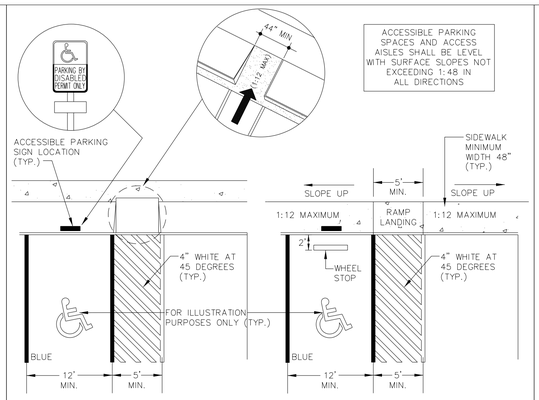

ACCESSIBLE PARKING SPACES AND ACCESS AISLES SHALL BE LEVEL WITH SURFACE SLOPES NOT EXCEEDING 1:48 IN ALL DIRECTIONS

SIDEWALK RAMP DETAIL — SIDEWALK ABUTTING PARKING LOT DETAIL

NOTE:

1. WHEN HEADER CURB IS USED IN LIEU OF WHEEL STOPS, SIDEWALK ABUTTING CURB MUST BE WIDENED SO THAT THE MINIMUM SIDEWALK WIDTH IS 68" TO ALLOW FOR A 44" MINIMUM CLEAR ACCESSIBLE ROUTE.
2. FOR COMPLETE DETAIL OF PARKING SIGN, REFER TO DETAIL M-12.
3. WHERE PARKING SPACES ARE MARKED WITH LINES, WIDTH MEASUREMENTS OF PARKING SPACES AND ACCESSIBLE AISLES SHALL BE MADE FROM THE CENTERLINE OF THE MARKINGS.
4. WHERE PARKING SPACES OR ACCESS AISLES ARE NOT ADJACENT TO ANOTHER PARKING SPACE OR ACCESS AISLE, MEASUREMENTS SHALL BE PERMITTED TO INCLUDE THE FULL WIDTH OF THE LINE DEFINING THE PARKING SPACE OR ACCESS AISLE.

STANDARD CONSTRUCTION DETAIL
ACCESSIBLE PARKING SPACES
REV. 2/13
FILE NAME: M11.DWG
DETAIL REF: M-11

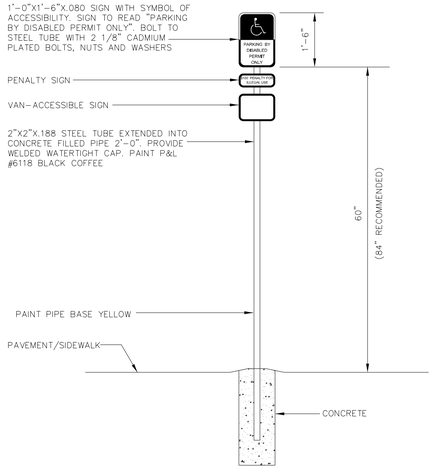

NOTE:

1. PARKING SPACE IDENTIFICATION SIGN SHALL CONFORM WITH CURRENT STATE, LOCAL, AND FEDERAL CODES AND REGULATIONS.
2. ALL SIGNS SHALL BE DESIGNED TO WITHSTAND 130 M.P.H. WIND SPEED.

STANDARD CONSTRUCTION DETAIL
PARKING SPACE IDENTIFICATION SIGN
(ACCESSIBLE PARKING)
REV. 2/13
FILE NAME: M12.DWG
DETAIL REF: M-12

STREET AND WALKWAY LIGHTS

WALKWAY LIGHTS: (HEIGHT: 10 TO 20 FEET)

1. ALONG DUNLAWTON AVENUE:
   A. WEST OF I-95: THE FLORIDIAN (SEE DETAIL M-15)
   B. FROM I-95 TO SPRUCE CREEK ROAD: GARDCO LIGHTING (SEE DETAIL M-16)
   C. EAST OF SPRUCE CREEK ROAD: LUMEC LIGHTING (SEE DETAIL M-17)
2. ALONG RIDGEWOOD AVENUE FROM THE NORTHERN CITY LIMITS SOUTH TO MEEKER PLACE:
   D. LUMEC LIGHTING (SEE DETAIL M-17)
3. IN LOCATIONS OTHER THAN DUNLAWTON AVENUE, THE WALKWAY LIGHTS SHALL BE ANY OF THE THREE (3) STYLES NOTED ABOVE OR THE FOLLOWING: STERNBERG GEORGETOWN (0650 / 4408-DFP), WILLIAMSBURG (9405-TF / 3610-T) OR COLONIAL (4620TF-LF). ALL CITY MAINTAINED WALKWAY LIGHTS ARE TO BE FLORIDA POWER AND LIGHT (FPL) SUPPLIED LIGHTS, UTILIZING 150 WATT HPS.
4. SPACING SHALL BE A MAXIMUM OF 100 FEET ON CENTER.

STREET LIGHTS: (HEIGHT: 20+ FEET)

1. STREET LIGHTS SHALL BE GENERALLY PROVIDED AT ALL INTERSECTIONS, AND AT MAJOR ENTRY ROADS INTO THE SUBDIVISION AS DESIGNATED BY THE ADMINISTRATIVE OFFICIAL.
2. ALL CITY MAINTAINED STREET LIGHTS ARE TO BE FPL SUPPLIED STREET LIGHTS.
3. PRIVATELY MAINTAINED STREET LIGHTS SHALL BE: GARDCO LIGHTING EH / 26" / 1 / 3 / 150 HPS / 240 / BRA / PC (NOTE: POLE SHALL BE CONCRETE AVAILABLE THROUGH F.P.L. AND SPACED AT INTERVALS OF 300 TO 400 FEET.)
4. ALTERNATIVE STREET LIGHTING PROPOSALS BY DEVELOPERS SHOULD BE SUBMITTED TO THE COMMUNITY DEVELOPMENT DEPT. FOR APPROVAL.

STANDARD CONSTRUCTION DETAIL
STREET AND WALKWAY LIGHTS
REV. 12/08
FILE NAME: M14.DWG
DETAIL REF: M-14

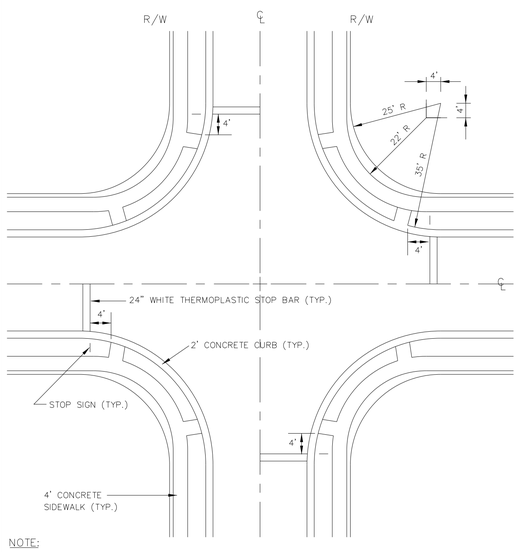

NOTE:

1. REFER TO DETAIL SHEET M-3 FOR SIDEWALK CONSTRUCTION SPECIFICATIONS.
2. REFER TO DETAIL SHEET M-4 & M-5 FOR SIDEWALK & BIKEPATH RAMP SPECIFICATIONS.

STANDARD CONSTRUCTION DETAIL
SIDEWALK CONSTRUCTION AT INTERSECTIONS
REV. 12/08
FILE NAME: M18.DWG
DETAIL REF: M-18

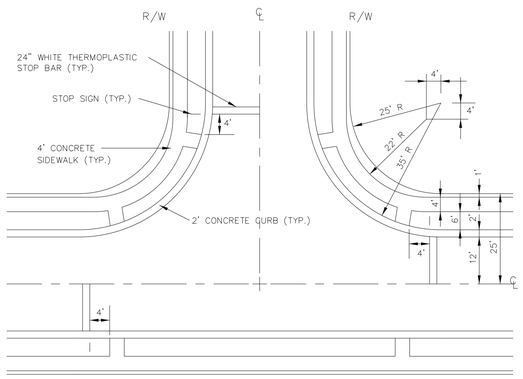

NOTE:

1. REFER TO DETAIL SHEET M-3 FOR SIDEWALK CONSTRUCTION SPECIFICATIONS.
2. REFER TO DETAIL SHEET M-4 & M-5 FOR SIDEWALK & BIKEPATH RAMP SPECIFICATIONS.

STANDARD CONSTRUCTION DETAIL
SIDEWALK CONSTRUCTION AT INTERSECTIONS
REV. 12/08
FILE NAME: M19.DWG
DETAIL REF: M-19

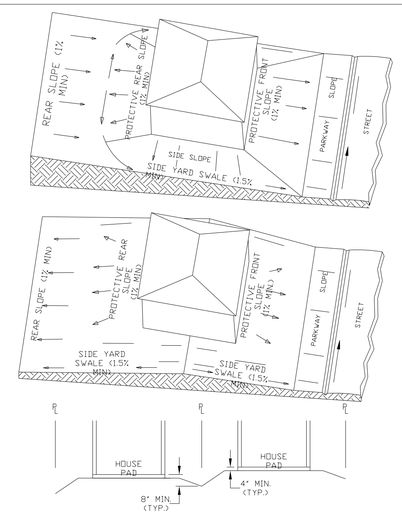

NOTE:

1. ALL FINISHED FLOOR ELEVATIONS SHALL BE SET A MINIMUM OF 16 INCHES ABOVE THE CENTERLINE OF THE ADJACENT ROADWAY.
2. ALL FINISHED FLOOR ELEVATIONS ARE A MINIMUM OF 1 FOOT ABOVE THE LIMITS OF THE 100 YEAR FLOOD PLAIN AND/OR 1 FOOT ABOVE THE 100-YEAR DESIGN HIGH WATER LEVEL OF THE ADJACENT DETENTION/RETENTION AREA.
3. IN CASES WHERE THE ABOVE CONDITIONS CONFLICT, NOTE #2 SHALL TAKE PRECEDENCE.
4. SIDE YARD SWALE SHALL BE CENTERED ON THE COMMON PROPERTY LINE.

STANDARD CONSTRUCTION DETAIL
RESIDENTIAL GRADING
REV. 12/08
FILE NAME: M23.DWG
DETAIL REF: M-23

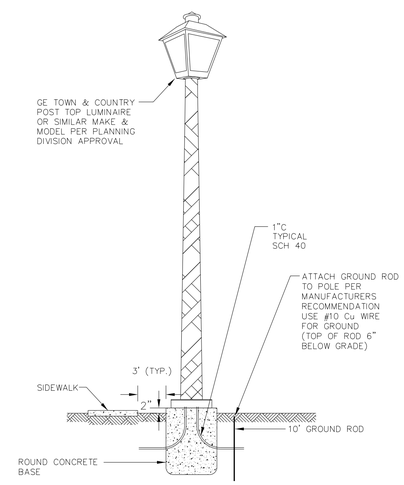

NOTE:

1. ALL WALKLIGHTS SHALL BE LOCATED ON 100' CENTERS. THE PLANNING DIVISION SHALL BE CONTACTED AT (386) 506-5600 TO FIELD VERIFY THE PROPOSED LOCATIONS FOR WALKLIGHTS.
2. ALL LIGHT POLES SHALL BE DESIGNED TO WITHSTAND 130 M.P.H. WIND SPEED.
3. THE STRING / SERIES OF WALK LIGHTS ADJACENT TO EACH PROJECT SHALL BE FITTED AND CONTROLLED BY ONE SINGLE SOLAR CELL.
4. MAINTENANCE AND OPERATION OF WALKLIGHTS SHALL BE THE RESPONSIBILITY OF THE HOMEOWNERS ASSOCIATION OR ADJACENT PROPERTY OWNER.

STANDARD CONSTRUCTION DETAIL
TRADITIONAL POST TOP
REV. 2/13
FILE NAME: M24.DWG
DETAIL REF: M-24

Dewberry
Dewberry Engineers Inc.
800 NORTH MAGNOLIA AVE
ORLANDO, FL 32803
SUITE 1000
PHONE: 407.843.5120
ENGINEERING BUSINESS -8794

WESTPORT RESERVE (PHASE 2B)

PORT ORANGE, FL

SEAL

7/1/2016

No.	DATE	BY	Description

REVISIONS

DRAWN BY	TFS
APPROVED BY	DMV
CHECKED BY	NPS
DATE	JANUARY 2016
DATUM	NAVD 88

TITLE

CITY ROAD/ DRAINAGE DETAILS

PROJECT NO. 50079046 (CC 1)

SHEET NO.

C23

...\CC1-SF PH1 CityMiscDetails-02.dgn
3:50:19 PM

SANITARY SEWER DESIGN NOTES

1. ALL GRAVITY SANITARY SEWER MAINS SHALL BE 8" DIAMETER MINIMUM. COMMERCIAL SERVICE LATERALS WITH MULTIPLE CONNECTIONS SHALL BE GREEN 6" DIA. OR LARGER. ALL SINGLE FAMILY RESIDENTIAL SERVICE LATERALS SHALL BE 4" - SINGLE SERVICES.
2. ALL GRAVITY SANITARY SEWER LINES SHALL BE GREEN PVC SDR 26, ASTM D-3034. IN PLACES WHERE A MINIMUM COVER OF 4.0' CANNOT BE MAINTAINED, AWWA C-900 OR C-905 GREEN PVC DR-25, CLASS 100 OR CONCRETE ENCASEMENT SHALL BE USED. WATER LINES, RECLAIMED LINES, AND STORM DRAINAGE CROSSINGS SHALL ALSO FOLLOW THE CONCRETE ENCASEMENT REQUIREMENT PER THESE STANDARDS AND AS PER REGULATORY REQUIREMENTS.
3. MINIMUM GRAVITY SANITARY SEWER SLOPES ARE AS FOLLOWS:

   8" PIPE 0.40 %
   10" PIPE 0.30 %
   12" PIPE 0.22 %

4. MAXIMUM DEPTH OF SANITARY MANHOLES SHALL BE 15.0'. MAXIMUM DEPTH OF LIFT STATION WET WELLS SHALL BE 20.0'.
5. GRAVITY SANITARY SEWER LINES SHALL BE INSTALLED WHENEVER POSSIBLE UNDER PAVED AREAS WITHIN PUBLIC RIGHTS-OF-WAY. UTILITY EASEMENTS SHALL BE PROVIDED WHENEVER PUBLICLY-OWNED SEWER LINES ARE CONSTRUCTED OUTSIDE OF A PUBLIC RIGHT-OF-WAY.
6. ALL TESTING REQUIRED BY THE CITY SHALL BE PAID FOR BY THE CONTRACTOR / DEVELOPER.
7. ALL LOCAL COLLECTION SANITARY SEWER MANHOLES SHALL BE PRECAST WITH A MINIMUM INSIDE DIAMETER OF 4 FEET.
8. STANDARD MANHOLES SHALL BE LOCATED AT INTERVALS NOT EXCEEDING 350 FEET.
9. INDIVIDUAL SANITARY SERVICE ON NEW CONSTRUCTION SHALL NOT BE CONNECTED DIRECTLY INTO MANHOLES, AND MUST CONNECTED TO SEWER MAIN LINES BY USE OF WYE CONNECTIONS, UNLESS OTHERWISE APPROVED BY THE CITY.
10. FOR SINGLE FAMILY HOMES, SINGLE FOUR INCH SEWER SERVICES LATERALS SHALL BE CONSTRUCTED AT EACH LOT OR UNIT AND LOCATED ON THE DOWNSTREAM SIDE OF THE LOT CENTER LINE. THESE SERVICES SHALL BE EXTENDED 4 FEET ABOVE GROUND AT THE PROPERTY LINE WITH A PVC RISER AND PLUG BEING EASILY VISIBLE FROM THE ROAD. RUBBER SEAL FITTINGS SHALL BE USED ON ALL LINES. NO GLUED JOINTS ARE PERMITTED ON LATERALS.
11. FOR MULTI-FAMILY AND COMMERCIAL SITES, SIX INCH MINIMUM SEWER SERVICES AND CLEANOUTS SHALL BE PROVIDED AS APPROVED BY THE CITY.
12. SANITARY SEWER LIFT STATIONS AND FORCE MAINS, SIZE, MATERIAL, AND DESIGNS SHALL BE APPROVED BY THE CITY. LIFT STATIONS SHALL BE CONSTRUCTED WITH A MINIMUM WET WELL INTERIOR DIAMETER OF 6.0 FEET. FORCE MAINS SHALL BE A MINIMUM 6 INCH DIAMETER.
13. IT SHALL BE THE RESPONSIBILITY OF THE DESIGN ENGINEER TO PREPARE AND SUBMIT FLOTATION CALCULATIONS TO SIZE THE BASE OF THE WET WELL, AND ANY MANHOLES AS DEEMED NECESSARY BY THE CITY.
14. SANITARY SEWER DROP MANHOLES SHALL ONLY BE USED UNDER SPECIAL CONDITIONS AS APPROVED BY THE CITY. DROPS LESS THAN 2.0' SHALL NOT BE ALLOWED.
15. ALL SANITARY SEWER FORCE MAINS, INCLUDING FITTINGS, SHALL BE DIP WITH PROTECTO 401, PVC AWWA C-900, OR C-905 (COLOR "GREEN") (PRESSURE FITTINGS, PRESSURE CLASS 150 OR C-907).

STANDARD CONSTRUCTION DETAIL
SANITARY SEWER DESIGN NOTES

FILE NAME S1.DOC
DETAIL REF: S-1
REV. 12/08

SANITARY SEWER DESIGN NOTES CONT'D

16. SANITARY SEWER MANHOLES WHICH HAVE SEWER FORCE MAINS DISCHARGING DIRECTLY INTO THEM SHALL BE FIBERGLASS OR POLY-ETHYLENE LINED OR EPOXY LINED. RETRO-FITTING OF MANHOLES WITH LINERS SHALL BE REQUIRED WHEN NEW CONNECTIONS SUCH AS THIS ARE MADE. FIBERGLASS SHALL BE A MINIMUM 1/2" THICKNESS UNLESS APPROVED OTHERWISE BY THE CITY. OTHER TYPES OF LINING METHODS AND MATERIALS MAY BE CONSIDERED ON A CASE BY CASE BASIS. UNDER SPECIAL CIRCUMSTANCES WHERE HYDROGEN SULFIDE IS A MAJOR CONCERN MANHOLES UPSTREAM AND/OR DOWNSTREAM OF THE FORCE MAIN TIE-IN OR WET WELL MAY ALSO BE REQUIRED TO HAVE LININGS INSTALLED.
17. ALL SANITARY SEWER MANHOLES SHALL HAVE ALL INTERIOR SURFACES COATED WITH THREE (3) COATS OF WHITE/GRAY OVER RED OVER BLACK EW-1 EPOXY PAINT WITH A TOTAL OF 12 MILS DRY FILM THICKNESS OR BLACK COAL-TAR EPOXY WITH A TOTAL OF 16 MILS THICKNESS. OUTSIDE SURFACE TO BE COATED WITH TWO (2) COATS OF BLACK OVER BLACK EW-1 EPOXY PAINT WITH A TOTAL OF 8 MILS OR ONE (1) COAT OF BLACK COAL-TAR EPOXY WITH A TOTAL OF 8 MILS. ALL COATS SHALL BE APPLIED AT THE FACTORY EXCEPT MINOR FIELD TOUCH UP AT JOINTS AND AT MANHOLE NECK.
18. ALL MANHOLES CONSTRUCTED IN SIDE YARDS, BACKYARDS, AND EASEMENTS OUTSIDE OF THE RIGHT-OF-WAY SHALL BE OUTFITTED WITH FIBERGLASS OR EPOXY LINERS IN COMPLIANCE WITH ASTM-3753 OR OTHER TYPES OF LINERS APPROVED BY THE CITY. IN ADDITION THE CITY MAY REQUIRE LINERS TO BE INSTALLED IN OTHER AREAS WHERE THE PUBLIC UTILITIES DEPARTMENT BELIEVES THE NEED IS JUSTIFIED SUCH AS IMMEDIATELY UPSTREAM OF FORCE MAINS CONNECTING TO GRAVITY MAINS.
19. ALL SEWER LINES WHICH ARE CONSTRUCTED OUTSIDE OF PUBLIC RIGHTS-OF-WAY WITHIN SIDE YARDS, BACKYARDS, AND OTHER POORLY ACCESSIBLE AREAS SHALL BE CONSTRUCTED OF GREEN C-900 PVC. ABSOLUTELY NO USE OF PLASTIC STYRENE FITTINGS SHALL BE ALLOWED.
20. CONTEC A-2000 PVC PIPE SHALL NOT BE ALLOWED FOR USE.
21. FOR CONSTRUCTION PURPOSES, THE PLANS SHALL DIMENSION THE LOCATION OF ALL FORCE MAINS, MEASURED FROM THE BACK OF CURB (OR EDGE OF PAVEMENT, IF NO CURBING EXISTS).
22. ALL HDPE PIPE INSTALLED FOR SEWAGE FORCE MAINS SHALL BE SDR 11 WITH #10 COPPPER HEAD TRACER WIRE UNLESS SPECIFICALLY NOTED OTHERWISE. THE HDPE PIPE SHALL BE SIZED TO MATCH THE EXTERNAL DIAMETER OF THE PVC TO WHICH IT IS ATTACHED.
23. LANDSCAPE PLANS SHALL CLEARLY DEPICT THE DESIGN LOCATION OF PLANTINGS RELATIVE TO THE LOCATION OF PUBLIC UTILITIES AND STORMWATER INFRASTRUCTURE IN ORDER TO EVALUATE POTENTIAL CONFLICTS.
24. GREASE INTERCEPTORS ARE REQUIRED FOR ALL COMMERCIAL BUILDINGS HAVING KITCHEN, FOOD PREPARATION OR SERVING FACILITIES AND / OR MISCELLANEOUS USES. GREASE INTERCEPTORS CONSTRUCTED EXTERNAL TO BUILDINGS SHALL BE SIZED IN ACCORDANCE WITH FAC 64-E-6. CALCULATIONS TO DETERMINE SIZING REQUIREMENTS SHALL BE SUBMITTED AS PART OF BUILDING PERMITTING. AN INSPECTION MANHOLE MAY BE REQUIRED IMMEDIATELY DOWN STREAM OF THE GREASE INTERCEPTOR FOR INSPECTION PURPOSES, AS DEEMED APPROPRIATE BY THE CITY.
25. WHERE POTABLE WATER AND SANITARY SEWER MAINS CROSS WITH LESS THAN (18) INCHES OF VERTICAL CLEARANCE OR WHERE THE SEWER MAIN IS ABOVE THE WATER MAIN, THE SEWER MAIN SHALL BE ENCASED WITH CONCRETE OR ENCLOSED IN A WATER TIGHT CARRIER PIPE, OR PRESSURE RATED PVC PIPE (MEETING THE AWWA C-900 OR C-905 SPECIFICATION) FOR A MINIMUM LENGTH OF (20) FEET, CENTERED ON THE POINT OF CROSSING. A MINIMUM HORIZONTAL SEPARATION OF (10) FEET (EDGE TO EDGE) BETWEEN POTABLE WATER MAINS AND SEWER MAINS SHALL BE MAINTAINED WHEN AT ALL POSSIBLE. WHEN THE 10-FOOT HORIZONTAL SEPARATION CANNOT BE MAINTAINED THE WATER MAIN SHALL BE

STANDARD CONSTRUCTION DETAIL
SANITARY SEWER DESIGN NOTES

FILE NAME S1.DOC
DETAIL REF: S-1
REV. 12/08

SANITARY SEWER DESIGN NOTES CONT'D

INSTALLED IN A SEPARATE TRENCH OR ON AN UNDISTURBED EARTH SHELF AT LEAST 18" ABOVE THE SEWAGE MAIN. ALTERNATIVELY, THE SEWER MAIN SHALL BE ENCASED WITH CONCRETE OR ENCLOSED IN A WATER TIGHT CARRIER PIPE, OR UPGRADED TO PRESSURE RATED PVC PIPE (MEETING AWWA C-900 OR C-905 SPECIFICATION) AND PRESSURE TESTED AT 150 PSI TO ASSURE WATER TIGHTNESS PRIOR TO BACKFILLING.

26. CEMENT USED IN CONCRETE MIX FOR PRECAST STRUCTURES SHALL BE TYPE II, ACID RESISTANT AND SULFIDE RESISTANT CONCRETE.
27. MORTAR TO CONTAIN "HYDRATITE" OR APPROVED EQUAL, TO PREVENT SHRINKAGE.
28. PROFILE VIEWS SHALL BE PROVIDED FOR ALL SEWER MAINS. PROFILE VIEWS SHALL BE ON THE SAME SHEET AS THE ASSOCIATED PLAN VIEW AND SHALL INCLUDE THE FOLLOWING INFORMATION:
    A. SIZE, SLOPE, LENGTH AND CLASS OF PIPE
    B. MANHOLE RIM AND INVERT ELEVATIONS
    C. UTILITY CROSSINGS WITH VERTICAL SEPERATION
    D. SHOW PROPOSED SEWER AND EXISTING UTILITY
    E. EXISTING GROUND PROFILE
    F. MATCH LINE
    G. VICINITY MAP
    H. PROFILE VIEW STATIONS TO COINCIDE WITH PLAN VIEW STATIONS

STANDARD CONSTRUCTION DETAIL
SANITARY SEWER DESIGN NOTES

FILE NAME S1.DOC
DETAIL REF: S-1
REV. 12/08

SANITARY SEWER CONSTRUCTION NOTES

1. THE CITY'S PUBLIC UTILITIES DEPARTMENT (386) 506-5750 SHALL BE GIVEN A MINIMUM OF 2 BUSINESS DAYS ADVANCE NOTICE (NOT INCLUDING HOLIDAYS OR WEEKENDS) PRIOR TO BEGINNING ANY SANITARY SEWER CONSTRUCTION.
2. ALL GRAVITY SANITARY SEWER LINES SHALL BE GREEN PVC SDR 26, ASTM D-3034. IN PLACES WHERE A MINIMUM COVER OF 4.0' CANNOT BE MAINTAINED, AWWA C-900 OR C-905 GREEN PVC DR-25, CLASS 100 OR CONCRETE ENCASEMENT SHALL BE USED. WATER LINES, RECLAIMED LINES, AND STORM DRAINAGE CROSSINGS SHALL ALSO FOLLOW THE CONCRETE ENCASEMENT REQUIREMENT PER THESE STANDARDS AND AS PER REGULATORY REQUIREMENTS.
3. GRAVITY SANITARY SEWER LINE CONSTRUCTION SHALL BE ACCOMPLISHED BY THE USE OF A LASER INSTRUMENT UNLESS ANOTHER METHOD IS PREVIOUSLY APPROVED BY THE CITY.
4. THE CONTRACTOR SHALL AT ALL TIMES, DURING PIPE LAYING OPERATIONS DEWATER THE GROUND SUFFICIENTLY TO KEEP THE GROUNDWATER ELEVATION A MINIMUM OF 6" BELOW THE PIPE BEING LAID WITHIN THE AREA OF THE TRENCH.
5. ALL PIPES SHALL BE LAID ON A FIRM FOUNDATION. SOFT OR SPONGY BEDDING FOR PIPES IS NOT ACCEPTABLE. ANY UNSUITABLE MATERIAL SHALL BE REMOVED AND REPLACED WITH A DRY, COMPACTED, GRANULAR MATERIAL SATISFACTORY TO THE CITY.
6. ON ALL EXCAVATION AND BACKFILLING THE CONTRACTOR SHALL PROVIDE ADEQUATE SHEETING AND BRACING IN ACCORDANCE TO O.S.H.A. GUIDELINE IN ORDER TO PROVIDE FOR THE SAFETY OF WORKMEN, AS WELL AS REPRESENTATIVES OF THE CITY, THE DESIGN ENGINEER, AND THE DEVELOPER.
7. ALL TRENCHES SHALL BE BACKFILLED WITH ACCEPTABLE MATERIAL AND COMPACTED TO THE SPECIFIED MINIMUM COMPACTION (95% IN UNPAVED AREAS AND 98% IN PAVED AREAS) OF THE OPTIMUM DENSITY OF THAT MATERIAL BASED ON THE AASHTO T-180 MODIFIED PROCTOR TEST.
8. THE CONTRACTOR SHALL EMPLOY AN INDEPENDENT TESTING LABORATORY AT HIS OWN EXPENSE TO INSURE THAT COMPACTION OF ALL FILL MATERIAL IS COMPLETED PROPERLY. TESTS SHALL BE DONE ONE FOOT ABOVE THE PIPE AND THEN AT ONE FOOT VERTICAL INTERVALS UNTIL FINAL GRADE IS REACHED. TESTING SHALL BE COMPLETED AND TEST DOCUMENTS SUBMITTED TO THE CITY AT A MINIMUM FREQUENCY OF ONE SET OF TESTS BETWEEN EACH MANHOLE AND ONE ADDITIONAL SET OF TESTS AT EVERY MANHOLE. IDENTIFICATION OF TEST LOCATIONS SHALL BE CLEARLY INDICATED ON TEST REPORTS. TEST RESULTS SHALL BE FORWARDED PROMPTLY TO THE CITY'S DESIGNATED SITE INSPECTOR.
9. THE CONTRACTOR SHALL INSTALL A METALLIZED FOIL LOCATOR TAPE, OR SIMILAR DEVICE AS MAY BE APPROVED BY THE CITY FOR THE FULL LENGTH OF ALL PVC SEWAGE FORCE MAINS. THIS PIPE LOCATOR AID SHALL BE INSTALLED BETWEEN 15" AND 24" BELOW FINISHED GRADE OR AS DIRECTED BY THE MANUFACTURER. TAPE SHALL BE COLOR CODED GREEN FOR SANITARY SEWER AND FORCE MAIN. A CONTINUOUS NO. 10 COPPER HEAD WIRE SHALL BE INSTALLED WITH WIRE BROUGHT UP AT ALL VALVES.
10. ALL TESTING REQUIRED BY THE CITY SHALL BE PAID FOR BY THE CONTRACTOR / DEVELOPER.
11. MANHOLE RIMS SHALL MATCH FLUSH WITH THE FINISH GRADE ELEVATION IN PAVED AREAS AND A MINIMUM OF 0.2 FEET AND MAXIMUM OF 0.5 FEET ABOVE GRADE GENERALLY IN UNPAVED AREAS.
12. THE CONTRACTOR SHALL CONSTRUCT SANITARY SEWER MANHOLES IN SUCH A WAY THAT SEWER LINES DO NOT INTERSECT SEALED JOINTS BETWEEN SECTIONS OF THE MANHOLE.
13. RUBBER BOOTS AND 316 STAINLESS STEEL BANDS SHALL BE UTILIZED IN THE CONNECTION OF THE SEWER MAIN TO THE MANHOLES (SEE STANDARD MANHOLE AND BOOT DETAILS).

STANDARD CONSTRUCTION DETAIL
SANITARY SEWER CONSTRUCTION NOTES

FILE NAME S2.DOC
DETAIL REF: S-2
REV. 12/08

SANITARY SEWER CONSTRUCTION NOTES CONT'D

14. INDIVIDUAL SANITARY SERVICE ON NEW CONSTRUCTION SHALL NOT BE CONNECTED DIRECTLY INTO MANHOLES, AND MUST CONNECTED TO SEWER MAIN LINES BY USE OF WYE CONNECTIONS, UNLESS OTHERWISE APPROVED BY THE CITY.
15. FOR SINGLE FAMILY HOMES, SINGLE FOUR INCH SEWER SERVICES LATERALS SHALL BE CONSTRUCTED AT EACH LOT OR UNIT AND LOCATED ON THE DOWNSTREAM SIDE OF THE LOT CENTER LINE. THESE SERVICES SHALL BE EXTENDED 4 FEET ABOVE GROUND AT THE PROPERTY LINE WITH A PVC RISER AND PLUG BEING EASILY VISIBLE FROM THE ROAD. RUBBER SEAL FITTINGS SHALL BE USED ON ALL LINES. NO GLUED JOINTS ARE PERMITTED ON LATERALS.
16. ALL SANITARY SEWER MANHOLE COVERS SHALL HAVE THE WORDS "PORT ORANGE FLORIDA SANITARY SEWER" CAST INTO THEM.
17. FORCE MAIN SYSTEMS SHALL BE PRESSURE TESTED AT 100 PSI STATIC PRESSURE FOR A PERIOD OF 2 HOURS PER AWWA STANDARDS.
18. ALL SANITARY SEWER FORCE MAINS SHALL USE A THRUST RESTRAINT JOINT METHOD IN COMPLIANCE WITH THE DUCTILE IRON PIPE RESEARCH ASSOCIATION GUIDELINES MODIFIED TO ACCOMMODATE PVC PIPE BY FOLLOWING THE RECOMMENDED INCREASE IN RESTRAINT LENGTH CORRESPONDING TO THE INSTALLATION OF POLYETHYLENE WRAP. IN NO INSTANCE SHALL THRUST BLOCKS BE PERMITTED.
19. THE CITY MAY REQUIRE ALL NEW SANITARY SEWER GRAVITY SYSTEMS TO BE SMOKE TESTED PRIOR TO FINAL ACCEPTANCE. ALL TESTING MUST BE DONE IN THE PRESENCE OF THE CITY'S DESIGNATED SITE INSPECTOR.
20. THE CITY OF PORT ORANGE RESERVES THE RIGHT TO REQUIRE THE DEVELOPER TO PERFORM VACUUM TESTING OF ALL SANITARY MANHOLES, AIR TEST SEWER MAINS, AND REQUIRES THAT ALL SANITARY SEWER MAIN LINES BE TELEVISED PRIOR TO FINAL ACCEPTANCE. LATERALS SHALL BE TELEVISED UPON DEMAND BY THE CITY PRIOR TO FINAL ACCEPTANCE WHEN IT IS SUSPECTED THAT A PROBLEM EXISTS.
21. ALL SEWER MAINS, PRIOR TO FINAL ACCEPTANCE BY THE CITY AND PRIOR TO ANY FINAL PAVING OPERATIONS, SHALL BE TELEVISED AND SUBMITTED TO THE CITY USING A "PAN AND TILT CAMERA" WITH DEPTH GAUGE IN FRONT OF THE CAMERA BY A CITY APPROVED CONTRACTOR. THE CAMERA SHALL RUN FROM DOWN STREAM MANHOLE TO UP STREAM MANHOLE. CITY INSPECTOR SHALL BE NOTIFIED IN ADVANCE AND BE PRESENT DURING THE TELEVISING OF THE SEWER SYSTEM. THE VIDEO SHALL BE NON-STOP WITH AUDIO DESCRIBING WHAT IS BEING REVIEWED. WRITTEN VIDEO LOGS DESCRIBING THE CONDITION OF THE LINES SHALL ACCOMPANY THE VIDEO SUBMISSION TO THE CITY PRIOR TO COMMENCING ANY INSTALLATION OF ASPHALT OR CONCRETE PAVEMENT. THE CITY MAY REQUIRE ADDITIONAL VIDEO TAPING, VIDEO TAPING OF LATERALS, AND/OR INFILTRATION/EXFILTRATION TESTS IF DEFECTS ARE APPARENT OR WORKMANSHIP IS QUESTIONABLE.
22. ALL SEWER LINES WHICH ARE CONSTRUCTED OUTSIDE OF PUBLIC RIGHTS-OF-WAY WITHIN SIDE YARDS, BACKYARDS, AND OTHER POORLY ACCESSIBLE AREAS SHALL BE CONSTRUCTED OF GREEN C-900 PVC. ABSOLUTELY NO USE OF PLASTIC STYRENE FITTINGS SHALL BE ALLOWED.
23. SEWER LATERAL LOCATIONS SHALL BE MARKED ALONG THE OUTSIDE OF THE CURB WITH A SAW CUT "V", OR BY A METAL TAB SET INTO THE PAVEMENT.
24. EZ-WRAP PLASTIC, AS MANUFACTURED BY PRESS SEAL GASKET CORPORATION, SHALL BE USED ON THE OUTSIDE OF ALL MANHOLE AND WETWELL JOINTS. APPLY ONE LAYER OF 9" WRAP CENTERED ON EACH JOINT. A CITY INSPECTOR SHALL PERSONALLY INSPECT ALL JOINT SEALS PRIOR TO BACKFILLING OPERATIONS.
25. ALL PROPOSED SEWER FORCE MAINS SHALL BE FLUSHED, PRESSURE TESTED, PIGGED AND CLEARED FOR SERVICE IN ACCORDANCE WITH THE LATEST AWWA STANDARDS AND THE FLORIDA DEPARTMENT OF ENVIROMENTAL PROTECTION REQUIREMENTS. THE CONTRACTOR SHALL NOTIFY THE CITY'S DESIGNATED

STANDARD CONSTRUCTION DETAIL
SANITARY SEWER CONSTRUCTION NOTES

FILE NAME S2.DOC
DETAIL REF: S-2
REV. 12/08

SANITARY SEWER CONSTRUCTION NOTES CONT'D

SITE INSPECTOR WHO SHALL COORDINATE WITH CITY PERSONNEL AT THE WATER OR WASTEWATER TREATMENT PLANT (AS APPROPRIATE) AT LEAST 2 BUSINESS DAYS PRIOR TO BEGINNING A FULL DIAMETER FLUSH OF THE MAINS AND PRIOR TO THE COMMENCEMENT OF PRESSURE TESTING (SUBJECT TO AVAILABILITY).

26. THE CONTRACTOR SHALL BE REQUIRED TO PIG ALL FORCE MAINS IN EXCESS OF 6" IN DIAMETER AND PRIMARY TRANSMISSION MAINS LOCATED ON COLLECTOR AND ARTERIAL ROADWAYS. LAUNCHING AND EXTRACTION POINTS SHALL BE DETERMINED BY THE CONTRACTOR. ALL PIGGING OPERATIONS SHALL BE WITNESSED BY A PORT ORANGE REPRESENTATIVE OR CITY INSPECTOR.
27. AS A GENERAL RULE, THE NUMBER OF JOINTS SHALL BE LIMITED WHENEVER POSSIBLE. IN SPECIAL CASES WHERE A POINT REPAIR TO AN 8"TO 12" PVC SEWER MAIN IS REQUIRED, THE PROPER RIGID WRAP AROUND SLEEVE SUCH AS A JCM-210 OVERSIZED DUCTILE IRON COUPLING OR AN APPROVED EQUAL MAY BE ALLOWED BY SPECIAL APPROVAL BY THE CITY.
28. ALL IN-LINE SANITARY SEWER FORCE MAIN VALVES SHALL BE RESILIENT SEAT (AWWA C-509 OR C-515) VALVES FEATURING AN EPOXY LINED DUCTILE IRON BODY.
29. ALL TAPPING OF PRESSURE MAINS AND CORING OF MANHOLES SHALL BE PERFORMED BY THE CITY AND BILLED IN ACCORDANCE WITH THE ADOPTED FEE RESOLUTION. SCHEDULING OF THESE CONNECTIONS SHALL REQUIRE A MINIMUM 2 BUSINESS DAYS NOTIFICATION DIRECTED TO THE CITY'S DESIGNATED SITE INSPECTOR WHO SHALL COORDINATE THE WORK DIRECTLY WITH THE PUBLIC UTILITIES DEPARTMENT. SUBSEQUENTLY, THE CONNECTION SHALL BE SCHEDULED TO COMMENCE BETWEEN 8:00 A.M. AND NOON ON THE APPROPRIATE DAY ESTABLISHED BY CITY. WITH RESPECT TO TIE-IN CONNECTIONS AND CORING OPERATIONS, THE CITY RESERVES THE RIGHT TO REQUIRE CONNECTIONS TO BE PERFORMED DURING PERIODS OF LOW FLOW (MIDNIGHT TO 6:00 A.M.) IN ORDER TO MINIMIZE SERVICE DISRUPTION TO EXISTING CUSTOMERS.
30. ALL WORK PERFORMED ON SANITARY SEWER FACILITIES OWNED OR PROPOSED TO BE OWNED BY THE CITY SHALL BE CONSTRUCTED BY AN UNDERGROUND UTILITY CONTRACTOR, OR LICENSED GENERAL CONTRACTOR, WHO IS LICENSED IN THE STATE OF FLORIDA AND REGISTERED WITH THE CITY.
31. UPON CONSTRUCTION COMPLETION AND ACCEPTANCE OF THE SYSTEM, IT SHALL BE THE DESIGN ENGINEER'S RESPONSIBILITY TO ENSURE THAT THE SYSTEM IS PROPERLY CERTIFIED AND ACCEPTED BY THE FLORIDA DEPARTMENT OF ENVIRONMENTAL PROTECTION AND AS-BUILTS ARE PROVIDED TO THE CITY PRIOR TO ANY USE OF THE SYSTEM.
32. FOR CONSTRUCTION PURPOSES, THE PLANS SHALL DIMENSION THE LOCATION, OF ALL FORCE MAINS MEASURED FROM THE BACK OF CURB (OR EDGE OF PAVEMENT, IF NO CURBING EXISTS).
33. ALL HDPE PIPE INSTALLED FOR SEWAGE FORCE MAINS SHALL BE SDR 11 WITH #10 COPPER HEAD TRACER WIRE UNLESS SPECIFICALLY NOTED OTHERWISE. THE HDPE PIPE SHALL BE SIZED TO MATCH THE EXTERNAL DIAMETER OF THE PVC TO WHICH IT IS ATTACHED.
34. ALL P.V.C. PIPE SHALL BE STORED IN SUCH A WAY AS TO PREVENT WARPING, DEFLECTION, OR DEFORMATION. ANY PIPE DEEMED TO BE MISSHAPED IN ANY WAY FOR ANY REASON SHALL BE REJECTED.
35. NO USED, RE-USED, RUSTED, SECOND HAND, OR ANY MATERIAL THAT IS NOT NEW SHALL BE USED IN ANY UTILITY IMPROVEMENT PROJECTS WITHIN THE CITIES SERVICE AREA.
36. WHERE POTABLE WATER AND SANITARY SEWER MAINS CROSS WITH LESS THAN (18) INCHES OF VERTICAL CLEARANCE OR WHERE THE SEWER MAIN IS ABOVE THE WATER MAIN, THE SEWER MAIN SHALL BE ENCASED WITH CONCRETE OR ENCLOSED IN A WATER TIGHT CARRIER PIPE, OR PRESSURE RATED PVC PIPE (MEETING THE AWWA C-900 OR C-905 SPECIFICATION) FOR A MINIMUM LENGTH OF (20) FEET, CENTERED ON THE

STANDARD CONSTRUCTION DETAIL
SANITARY SEWER CONSTRUCTION NOTES

FILE NAME S2.DOC
DETAIL REF: S-2
REV. 12/08

SANITARY SEWER CONSTRUCTION NOTES CONT'D

POINT OF CROSSING. A MINIMUM HORIZONTAL SEPARATION OF (10) FEET (EDGE TO EDGE) BETWEEN POTABLE WATER MAINS AND SEWER MAINS SHALL BE MAINTAINED WHEN AT ALL POSSIBLE. WHEN THE 10-FOOT HORIZONTAL SEPARATION CANNOT BE MAINTAINED THE WATER MAIN SHALL BE INSTALLED IN A SEPARATE TRENCH OR ON AN UNDISTURBED EARTH SHELF AT LEAST 18" ABOVE THE SEWAGE MAIN. ALTERNATIVELY, THE SEWER MAIN SHALL BE ENCASED WITH CONCRETE OR ENCLOSED IN A WATER TIGHT CARRIER PIPE, OR UPGRADED TO PRESSURE RATED PVC PIPE (MEETING AWWA C-900 OR C-905 SPECIFICATION) AND PRESSURE TESTED AT 150 PSI TO ASSURE WATER TIGHTNESS PRIOR TO BACKFILLING.

37. CEMENT USED IN CONCRETE MIX FOR PRECAST STRUCTURES SHALL BE TYPE II, ACID RESISTANT AND SULFIDE RESISTANT CONCRETE.
38. MORTAR TO CONTAIN "HYDRATITE" OR APPROVED EQUAL, TO PREVENT SHRINKAGE
39. CONTRACTORS SHALL PROVIDE THICKER MANHOLE WALLS AND BASES AS REQUIRED TO PREVENT FLOTATION BASED ON HIGH GROUND WATER TABLE ELEVATIONS AS DETERMINED USING ACCEPTED ENGINEERING PRACTICES AND/OR APPROVED BY PUBLIC UTILITIES DEPT.
40. SHOP DRAWINGS FOR ALL STRUCTURES SHALL BE SUBMITTED TO AND APPROVED BY THE DESIGN ENGINEER PRIOR TO INSTALLATION WITH TWO COPIES FORWARDED BY THE DESIGN ENGINEER TO THE CITY.
41. NO BUG HOLES OR HONEYCOMB WILL BE ACCEPTED.
42. ALL SANITARY SEWER MANHOLES SHALL HAVE ALL INTERIOR SURFACES COATED WITH THREE (3) COATS OF WHITE/GRAY OVER RED OVER BLACK EW-1 EPOXY PAINT WITH A TOTAL OF 12 MILS THICKNESS OR BLACK COAL-TAR EPOXY WITH A TOTAL OF 16 MILS THICKNESS. OUTSIDE SURFACE TO BE COATED WITH TWO (2) COATS OF BLACK OVER BLACK EW-1 EPOXY PAINT WITH A TOTAL OF 8 MILS AND ONE (1) COAT OF BLACK COAL-TAR EPOXY WITH A TOTAL OF 8 MILS. ALL COATS SHALL BE APPLIED AT THE FACTORY EXCEPT MINOR FIELD TOUCH UP AT JOINTS AND AT MANHOLE NECK.

STANDARD CONSTRUCTION DETAIL
SANITARY SEWER CONSTRUCTION NOTES

FILE NAME S2.DOC
DETAIL REF: S-2
REV. 12/08

Dewberry

Dewberry Engineers Inc.
800 NORTH MAGNOLIA AVE
ORLANDO, FL 32803
SUITE 1000
PHONE: 407.843.5120
ENGINEERING BUSINESS -8794

WESTPORT RESERVE
(PHASE 2B)

PORT ORANGE, FL

SEAL

7/1/2016

No.	DATE	BY	Description

REVISIONS

DRAWN BY	TFS
APPROVED BY	DMV
CHECKED BY	NPS
DATE	JANUARY 2016
DATUM	NAVD 88

TITLE

CITY SEWER DETAILS

PROJECT NO. 50079046 (CC 1)

C24

SHEET NO.

3:50:22 PM ...\CC1-SF PH1 CitySewerDetails-01.dgn

City of Port Orange Public Utilities Department
List of Approved Products

Sanitary Sewer & Force Main 12/08

Air Release Valves

MANUFACTURER	MODEL #
A.R.I.	D-025P (Plastic)

Gate Valves and Tapping Valves – Resilient Seated (AWWA C509 and C515) 24" or Smaller

MANUFACTURER	MODEL #
American AVK Co.	Series 3, 18, 25, 45, 55, & 66
Clow	Model 2638 and 2639
Mueller	A-2360, A-2361, T-2360 & T-2361
American Flow Control	Series 2500

Joints Restrained – PVC Only

MANUFACTURER	MODEL #
EBBA Iron Inc	Series 1500/1600 2000/2500/2800
Star Pipe	Stargrip Series 1000/1100/1200/4000
Sigma	One-Lock SLC PV-Lok for PVC
Smith-Blair	Cam-Lock (111 & 120) & Bell-Lock (115 & 165)

STANDARD CONSTRUCTION DETAIL
SANITARY SEWER & FORCE MAIN
APPROVED PRODUCTS

FILE NAME: S5.DOC
DETAIL REF: S-5

City of Port Orange Public Utilities Department
List of Approved Products

Sanitary Sewer & Force Main 12/08

Force Main Fittings – PVC and DIP Class 350 (with Protecto 401 Ceramic Epoxy).

C-900, C-905 or C-907

MANUFACTURER	MODEL #
Harco	
Multi-Fittings	
Plastic Trends	
Head	
Tyler/Union (Lined with Protecto 401 Ceramic Epoxy)	

Manhole and Lift Station Wet Well Rehabilitation Liner

MANUFACTURER	MODEL #
Raven 405	
¼" Minimum Thick Fiberglass Liner (cylincer)	

STANDARD CONSTRUCTION DETAIL
SANITARY SEWER & FORCE MAIN
APPROVED PRODUCTS

FILE NAME: S5.DOC
DETAIL REF: S-5

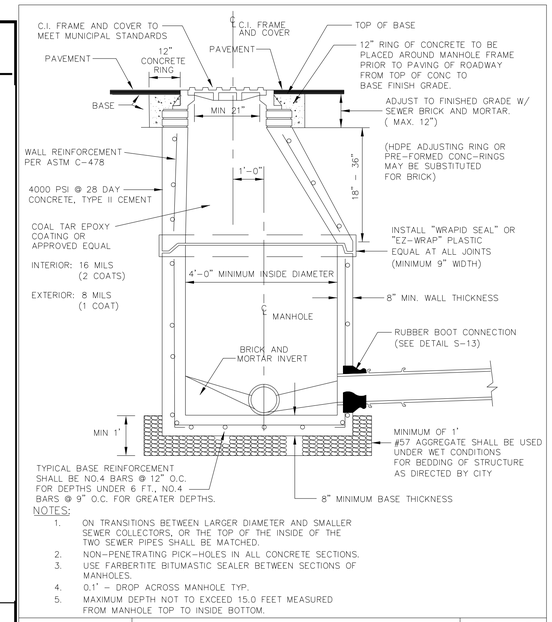

NOTES:
1. ON TRANSITIONS BETWEEN LARGER DIAMETER AND SMALLER SEWER COLLECTORS, OR THE TOP OF THE INSIDE OF THE TWO SEWER PIPES SHALL BE MATCHED.
2. NON-PENETRATING PICK-HOLES IN ALL CONCRETE SECTIONS.
3. USE FARBERTITE BITUMASTIC SEALER BETWEEN SECTIONS OF MANHOLES.
4. 0.1' – DROP ACROSS MANHOLE TYP.
5. MAXIMUM DEPTH NOT TO EXCEED 15.0 FEET MEASURED FROM MANHOLE TOP TO INSIDE BOTTOM.

STANDARD CONSTRUCTION DETAIL
STANDARD MANHOLE
REV. 12/08

FILE NAME: S6.DWG
DETAIL REF: S-6

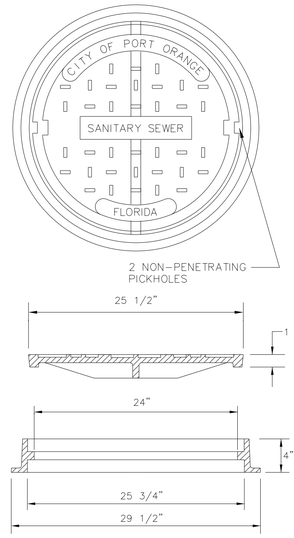

NOTES:
1- MATERIAL; ASTM-A48 CLASS 35B GRAY IRON
2- RING WT.: 85 LBS. APP
3- COVER WT: 120 LBS. APP.

STANDARD CONSTRUCTION DETAIL
SANITARY SEWER COVER & GENERAL NOTES
USF 117 RING & BL COVER
REV. 12/08

FILE NAME: S7.DWG
DETAIL REF: S-7

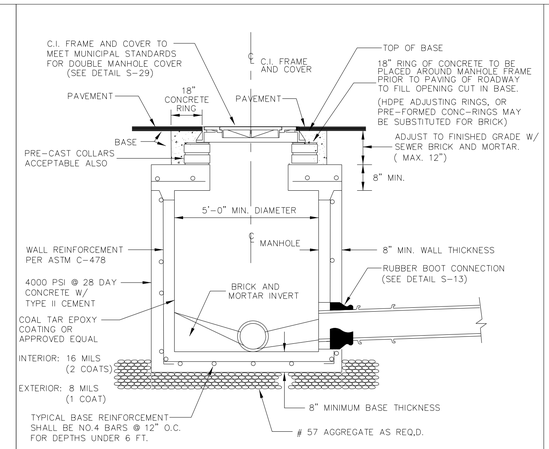

SECTION – SHALLOW MANHOLE
USE FOR MANHOLES OF 5'-0" OR LESS IN DEPTH

NOTES:
1. INSTALL EZ-WRAP PLASTIC OR EQUAL AT ALL JOINTS (MINIMUM 9" WIDTH).
2. NON-PENETRATING PICK-HOLES IN ALL CONCRETE SECTIONS.
3. USE FARBERTITE BITUMASTIC SEALER BETWEEN SECTIONS OF MANHOLE.

STANDARD CONSTRUCTION DETAIL
SHALLOW MANHOLE
REV. 06/11

FILE NAME: S8.DWG
DETAIL REF: S-8

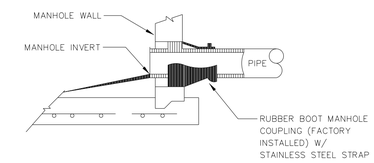

MANHOLE PIPE CONNECTION DETAIL
FOR NEW CONNECTIONS IN EXISTING MANHOLES

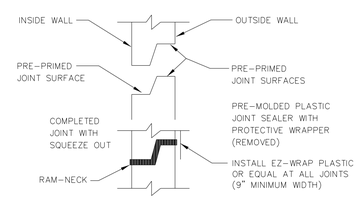

PRECAST JOINT CONNECTION

NOTES:
1. ALL NEW CONNECTIONS TO EXISTING SANITARY SEWER MANHOLES SHALL UTILIZE A CORING METHOD AND THE IN-FIELD INSTALLATION OF A RUBBER BOOT INTO THE MANHOLE.

STANDARD CONSTRUCTION DETAIL
RUBBER BOOT AND PRECAST JOINT CONNECTION.
REV. 12/08

FILE NAME: S13.DWG
DETAIL REF: S-13

Dewberry

Dewberry Engineers Inc.
800 NORTH MAGNOLIA AVE
ORLANDO, FL 32803
SUITE 1000
PHONE: 407.843.5120
ENGINEERING BUSINESS -8794

WESTPORT RESERVE
(PHASE 2B)

PORT ORANGE, FL

SEAL

7/1/2016

No.	DATE	BY	Description

REVISIONS

DRAWN BY TFS
APPROVED BY DMV
CHECKED BY NPS
DATE JANUARY 2016
DATUM NAVD 88

TITLE

CITY SEWER DETAILS

PROJECT NO. 50079046 (CC 1)

C25

SHEET NO.

3:50:57 PM ...\CC1-SF PH1 CtySewerDetails-02.dgn

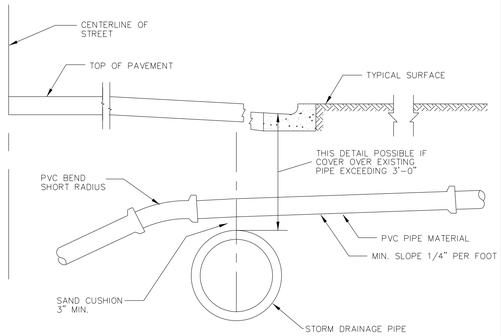

ALTERNATE GRADIENT FOR HOUSE SERVICE SEWERS AT CONFLICTS WITH EXISTING STORM SEWERS & OTHER EXISTING CONDUITS

APPROVED PIPE MATERIALS–PVC (SDR 26)

STANDARD CONSTRUCTION DETAIL STORM DRAINAGE CROSSING / SANITARY LATERAL PIPE CROSSING REV. 12/08	FILE NAME: S14.DWG DETAIL REF: S-14	

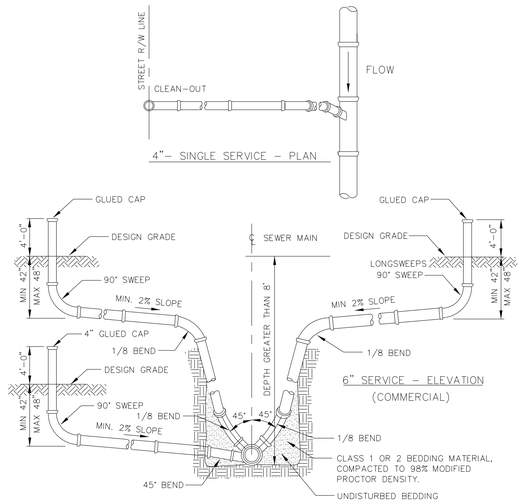

NOTES:

1. USE OF STYRENE MATERIAL WILL NOT BE PERMITTED.
2. ALL JOINTS TO BE RUBBER GASKET (NO GLUED FITTINGS) TYPICAL.
3. USE ALL HARCO SDR–26 FITTINGS OR CITY APPROVED EQUAL.
4. APPROVED EQUAL IS MULTI FITTINGS 8" X 6" OR 8" X 4" T–WYE AND 8" X 6" OR 8" X 4" WYE WITH A DATE STAMP.

4" – RESIDENTIAL
6" – COMMERCIAL

STANDARD CONSTRUCTION DETAIL SEWER LATERAL REV. 12/08	FILE NAME: S15.DWG DETAIL REF: S-15	

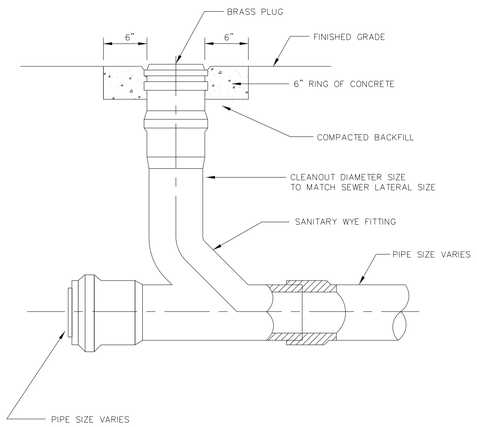

NOTE:

1. CLEANOUT SIZE SHALL ALWAYS MATCH MAIN LINE SIZE TO ALLOW FOR PROPER CLEANING

STANDARD CONSTRUCTION DETAIL CLEANOUT REV. 12/08	FILE NAME: S16.DWG DETAIL REF: S-16	

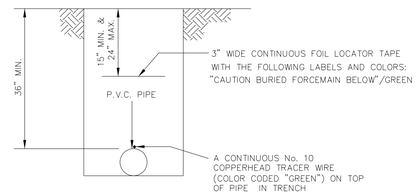

NOTE:

1) A CONTINUOUS No. 10 COPPERHEAD TRACER WIRE TO BE INSTALLED WITH ALL NON–METALLIC PIPE. WIRE SHALL BE BROUGHT UP TO GRADE AT ALL VALVES OUTSIDE P.V.C. SLEEVE, (SEE DETAIL W–6).

2) ALL TRACER WIRES SHALL BE INTERCONNECTED WITH WATER PROOF WIRE NUT CAP OR WITH SIMILAR WATER PROOF SPLICE KIT AT ANY SPLICE AND WHERE SERVICES CONNECT TO MAINS.

3) A SUCCESSFUL CONTINUITY TEST SHALL BE CONDUCTED AND WITNESSED BY A CITY INSPECTOR AT THE COMPLETION OF TRACER WIRE INSTALLATION.

STANDARD CONSTRUCTION DETAIL LOCATOR TAPE/ TRACERWIRE INSTALLATION FOR SEWER FORCE MAIN, PIPELINES REV. 12/08	FILE NAME: S17.DWG DETAIL REF: S-17	

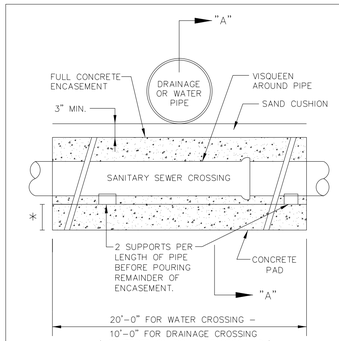

ELEVATION

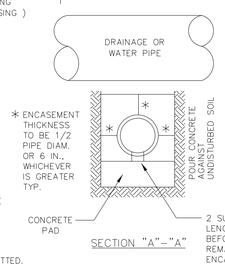

SECTION "A"–"A"

NOTES:

1. ALL CONCRETE SHALL BE 3000 PSI MINIMUM 28 DAYS STRENGTH.
2. WATER MAIN SHALL BE LOCATED ABOVE OR BELOW ENCASEMENT AS SHOWN ON PLANS OR DETERMINED IN THE FIELD, USE ENCASEMENT WHERE VERTICAL CLEARANCE WATER MAIN AND SEWER MAIN IS LESS THAN 18 INCHES.
3. NO DUCTILE IRON SEWER PIPE IS PERMITTED.

STANDARD CONSTRUCTION DETAIL SEWER / WATER / DRAINAGE CROSSING REV. 12/08	FILE NAME: S18.DWG DETAIL REF: S-18	

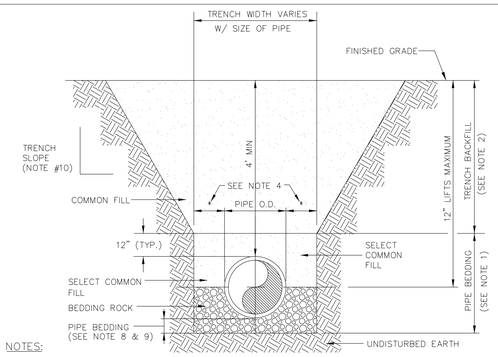

NOTES:

1. PIPE BEDDING: #57 STONE OR BEDDING ROCK COMPACTED TO 95% THE MAXIMUM DENSITY AS PER AASHTO T–180.
2. TRENCH BACKFILL: COMMON FILL COMPACTED TO 95% THE MAXIMUM DENSITY AS PER AASHTO T–180. (98% DENSITY REQUIRED UNDER PAVEMENT, DRIVEWAYS AND STRUCTURES.)
3. USE TYPE "A" BEDDING TO BE DETERMINED IN THE FIELD AS DIRECTED BY THE CITY.
4. (*): 15" MAX. FOR PIPE DIAMETER LESS THAN 24", AND 24" MAX. FOR PIPE DIAMETER 24" AND LARGER.
5. WATER SHALL NOT BE PERMITTED IN THE TRENCH DURING CONSTRUCTION.
6. ALL PIPE TO BE INSTALLED WITH BELL FACING UPSTREAM TO THE DIRECTION OF FLOW.
7. REFER TO SECTION 32.5 OF THE MANUAL FOR SHEETING AND BRACING IN EXCAVATIONS.
8. GRAVITY SEWERS SHALL UTILIZE TYPE "A" BEDDING, WHERE UNSUITABLE MATERIAL EXISTS. BEDDING DEPTH SHALL BE 4" MINIMUM FOR PIPE DIAMETER LESS THAN 15", AND 6" MINIMUM FOR PIPE DIAMETER 16" AND LARGER.
9. DEPTH FOR REMOVAL OF UNSUITABLE MATERIAL SHALL GOVERN DEPTH OF BEDDING ROCK BELOW THE PIPE. CITY SHALL DETERMINE IN THE FIELD REQUIRED REMOVAL OF UNSUITABLE MATERIAL TO REACH SUITABLE FOUNDATION.
10. REFER TO OSHA REQMTS. FOR SLOPING, SHEETING AND BRACING IN EXCAVATIONS.

STANDARD CONSTRUCTION DETAIL TYPE "A" BEDDING AND TRENCH (SPECIAL GRAVITY SEWER INSTALLATIONS) REV. 12/08	FILE NAME: S27.DWG DETAIL REF: S-27	

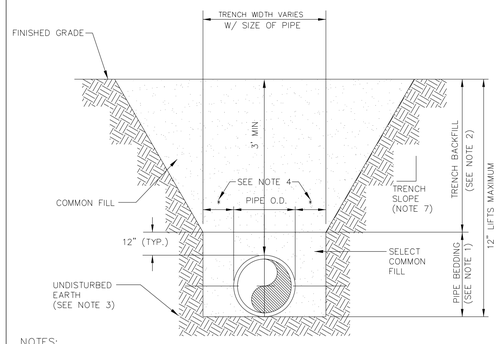

NOTES:

1. PIPE BEDDING: SELECT COMMON FILL COMPACTED TO 95% THE MAXIMUM DENSITY AS PER AASHTO T–180.
2. TRENCH BACKFILL: COMMON FILL COMPACTED TO 95% THE MAXIMUM DENSITY AS PER AASHTO T–180. (98% DENSITY REQUIRED UNDER DRIVEWAYS, PAVEMENT AND STRUCTURES).
3. PIPE BEDDING UTILIZING SELECT COMMON FILL OR BEDDING ROCK IN ACCORDANCE WITH TYPE "A" BEDDING AND TRENCHING DETAIL MAY BE REQUIRED AS DIRECTED BY THE CITY.
4. (*): 15" MAX. FOR PIPE DIAMETER LESS THAN 24", AND 24" MAX. FOR PIPE DIAMETER 24" AND LARGER.
5. WATER SHALL NOT BE PERMITTED IN THE TRENCH DURING CONSTRUCTION.
6. ALL PIPE TO BE INSTALLED WITH BELL FACING UPSTREAM TO THE DIRECTION OF FLOW.
7. REFER TO OSHA REQUIREMENTS FOR SLOPING, SHEETING AND BRACING IN EXCAVATIONS.
8. FINAL RESTORATION IN IMPROVED AREAS SHALL BE IN COMPLIANCE WITH ALL APPLICABLE REGULATIONS OF GOVERNING AGENCIES. SURFACE RESTORATION WITHIN RIGHT–OF–WAY SHALL COMPLY WITH REQUIREMENTS OF RIGHT–OF–WAY UTILIZATION REGULATIONS AND ROAD CONSTRUCTION SPECIFICATIONS.

STANDARD CONSTRUCTION DETAIL TYPE "B" BEDDING AND TRENCH (TYPICAL FOR WATER, SEWER, FORCE MAIN, STORM DRAIN AND RECLAIMED WATER MAIN INSTALLATIONS) REV. 12/08	FILE NAME: S28.DWG DETAIL REF: S-28	

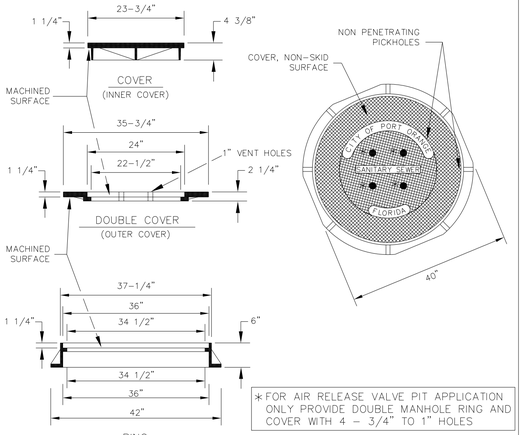

* FOR AIR RELEASE VALVE PIT APPLICATION ONLY PROVIDE DOUBLE MANHOLE RING AND COVER WITH 4 – 3/4" TO 1" HOLES

NOTES:

1. U.S. FOUNDRY 667 RING; CR (OUTER COVER); BJ (INNER COVER) WITH 4 TO 6 1" VENT HOLES
2. BJ (INNER COVER) WT.: 200 LBS.
3. CR (OUTER COVER) WT.: 220 LBS.
4. RING WT.: 220 LBS.
5. MATERIAL: ASTM–A48 CLASS 30B GRAY IRON

STANDARD CONSTRUCTION DETAIL SANITARY SEWER DOUBLE MANHOLE COVER REV. 12/08	FILE NAME: S29.DWG DETAIL REF: S-29	

Dewberry

Dewberry Engineers Inc.
800 NORTH MAGNOLIA AVE
ORLANDO, FL 32803
SUITE 1000
PHONE: 407.843.5120
ENGINEERING BUSINESS -8794

WESTPORT RESERVE (PHASE 2B)

PORT ORANGE, FL

SEAL

7/1/2016

No.	DATE	BY	Description

REVISIONS

DRAWN BY	TFS
APPROVED BY	DMV
CHECKED BY	NPS
DATE	JANUARY 2016
DATUM	NAVD 88

TITLE

CITY SEWER DETAILS

PROJECT NO. 50079046 (CC 1)

C26

SHEET NO.

...\CC1-SF PH1 CitySewerDetails-03.dgn 3:51:11 PM

POTABLE WATER DESIGN NOTES

1. ALL SINGLE RESIDENTIAL WATER SERVICES SHALL BE 1", DOUBLE RESIDENTIAL SERVICES SHALL ALSO BE 1", AND COMMERCIAL SERVICES SHALL BE 1" OR 2". NO 1 1/2" SERVICES ARE ALLOWED. POLYETHYLENE TUBING SHALL BE USED, IN ACCORDANCE WITH THE FOLLOWING SPECIFICATIONS: POLYETHYLENE TUBING SHALL BE CTS 3408 HIGH DENSITY TUBING, BLUE IN COLOR, AND RATED FOR A MINIMUM OF 200 P.S.I. WITH SDR OF 9 (CTS). THE TUBING SHALL HAVE A VIRGIN HIGH DENSITY POLYETHYLENE CENTER FOR WHICH THE MANUFACTURER SHALL FURNISH A CERTIFICATE OF PURITY. THE TUBING SHALL HAVE UV PROTECTION AND SHALL NOT BE AFFECTED BY DIRECT SUNLIGHT. THE TUBING SHALL COMPLY WITH OR EXCEED THE APPLICABLE STANDARDS OF A.S.T.M. D1248, D3350, D2239, D2737, N.S.F. 14 AND A.W.W.A. C901 AND SHALL COME WITH A LIFETIME WARRANTY. ACCEPTABLE MANUFACTURERS: ENDOT ENDOPURE.
2. WATER VALVES SHALL BE PLACED AT ALL STREET INTERSECTIONS AND AT MAXIMUM SPACINGS OF 1,000.0 FEET.
3. AT ALL WATER MAIN TEES AND CROSSES, VALVES SHALL BE INSTALLED ON ALL LEGS EXCEPT ONE.
4. APPROVED WATER VALVE TYPES ARE THE FOLLOWING:
   A. RESILIENT SEATED GATE VALVES EQUAL TO OR LESS THAN 24" DIAMETER (AWWA C-515)
   B. BUTTERFLY VALVES GREATER THAN 24" (AWWA SC-504)
   C. TAPPING VALVES WITH MECHANICAL TAPPING SLEEVE
5. TYPICALLY, A MINIMUM OF ONE FIRE HYDRANT SHALL BE LOCATED AT EVERY INTERSECTION. OTHER FIRE HYDRANTS SHALL BE LOCATED SO AS TO PRODUCE A MAXIMUM 250.0 FEET AND/OR MEETING THE LATEST NFPA CODE HOSE LAY ALONG THE STREET FOR ALL RESIDENTIAL BUILDINGS. ALL BUILDINGS WITH FIRE PROTECTION SPRINKLER SYSTEM, THE FIRE DEPARTMENT CONNECTION (FDC) MUST BE WITHIN 50.0 FEET OF UNOBSTRUCTED DISTANCE TO AN APPROVED FIRE HYDRANT LOCATION BY THE FIRE MARSHALL AND OR PUBLIC UTILITIES ENGINEER.
6. AS STANDARD PRACTICE, WATER MAINS SHALL BE INSTALLED 4 FEET OFF THE BACK OF CURB OR AS APPROVED BY THE CITY.
7. ALL WATER MAINS SHALL BE NSF AND/OR AWWA APPROVED FOR POTABLE WATER USE, AND SHALL HAVE A MINIMUM COVER OF 36 INCHES (3.0 FEET) AND A MAXIMUM DEPTH OF 48 INCHES (4.0 FEET) FROM FINAL GRADE EXCEPT AT LOCATIONS OF UTILITY CROSSINGS OR WITH SPECIAL APPROVAL WHEN IT IS DETERMINED TO BE IN THE BEST INTEREST OF THE CITY.
8. WATER MAINS SHALL BE C-900 PVC OR C-905 CL 150 (COLOR"BLUE") OR D.I.P. PRESSURE CLASS 350 STANDARD CEMENT LINED UNLESS OTHERWISE APPROVED BY THE CITY.
9. WATER DISTRIBUTION SYSTEM SHALL BE DESIGNED TO COMPLY WITH THE CITY'S LATEST FIRE (WATER) FLOW CODE. ALL DEDICATED FIRE LINES SHALL BE INDEPENDENT OF ALL OTHER DOMESTIC WATER SERVICES.
10. MEGALUGS, BOLTLESS RESTRAINED JOINTS OR GRIPPER GASKETS SHALL BE USED ON ALL RESTRAINED JOINT INSTALLATIONS. MINIMUM DEPTH OF BURY ON PIPES NOT MEETING REQUIRED COVER REQUIREMENTS SHALL FOLLOW THE MOST RECENT DIPRA THRUST RESTRAINT DESIGN GUIDELINES USING TORQUE WRENCHES PER MANUFACTURERS RECOMMENDATION.
11. WATER SERVICES SHALL BE NORMALLY DOUBLE 1" SERVICES LOCATED AT SIDE LOT LINES. INSTANCES WHERE SERVICES NEED TO BE OFFSET, 1" SINGLE SERVICES SHALL BE SPECIFIED. THESE SERVICES MAY BE OFFSET A MAXIMUM OF 2.0' FROM SIDE LOT LINES.
12. THE CITY REQUIRES DOUBLE WATER SERVICE INSTALLATIONS WHEREVER FEASIBLE. WHEN DESIGN CONFLICTS EXIST, SINGLE WATER SERVICES MAY BE ALLOWED. THIS MAY APPLY AT STORMWATER INLETS, FIRE HYDRANTS, FPL TRANSFORMERS, ETC. AND OTHER LOCATIONS DEEMED APPROPRIATE BY THE CITY.

STANDARD CONSTRUCTION DETAIL
POTABLE WATER DESIGN NOTES

FILE NAME W1.DOC
DETAIL REF: W-1
REV. 12/08

POTABLE WATER DESIGN NOTES CONT'D

13. ALL PROPOSED POTABLE WATER MAINS SHALL BE FLUSHED, DISINFECTED, PRESSURE TESTED AND BACTERIOLOGICALLY CLEARED FOR SERVICE WHEN APPROPRIATE IN ACCORDANCE WITH THE LATEST AWWA STANDARDS AND THE FLORIDA DEPARTMENT OF ENVIROMENTAL PROTECTION REQUIREMENTS. THE CONTRACTOR SHALL NOTIFY THE CITY'S DESIGNATED SITE INSPECTOR WHO SHALL COORDINATE WITH CITY PERSONNEL AT THE WATER TREATMENT PLANT AT LEAST 2 BUSINESS DAYS PRIOR TO BEGINNING FLUSH OF THE MAINS AND PRIOR TO THE COMMENCEMENT OF PRESSURE TESTING.
14. FOR CONSTRUCTION PURPOSES, THE PLANS SHALL DIMENSION THE PROPOSED LOCATIONS OF ALL WATER MAINS MEASURED FROM THE BACK OF CURB (OR EDGE OF PAVEMENT, IF NO CURB IS USED).
15. LANDSCAPE PLANS SHALL CLEARLY DEPICT THE DESIGN LOCATION OF PLANTINGS RELATIVE TO THE LOCATION OF PUBLIC UTILITIES AND STORMWATER INFRASTRUCTURE IN ORDER TO EVALUATE POTENTIAL CONFLICTS.
16. NEW OR RELOCATED, UNDERGROUND WATER MAINS SHALL BE LAID TO PROVIDE A HORIZONTAL DISTANCE OF AT LEAST THREE FEET BETWEEN THE OUTSIDE OF THE WATER MAIN AND THE OUTSIDE OF ANY EXISTING OR PROPOSED STORM SEWER, STORMWATER FORCE MAIN, OR PIPELINE CONVEYING RECLAIMED WATER REGULATED UNDER PART III OF CHAPTER 62-610, F.A.C.
17. NEW OR RELOCATED, UNDERGROUND WATER MAINS SHALL BE LAID TO PROVIDE A HORIZONTAL DISTANCE OF AT LEAST THREE FEET, AND PREFERABLY TEN FEET, BETWEEN THE OUTSIDE OF ANY EXISTING OR PROPOSED VACUUM-TYPE SANITARY SEWER.
18. NEW OR RELOCATED, UNDERGROUND WATER MAINS SHALL BE LAID TO PROVIDE A HORIZONTAL DISTANCE OF AT LEAST SIX FEET, AND PREFERABLY TEN FEET, BETWEEN THE OUTSIDE OF ANY EXISTING OR PROPOSED GRAVITY- OR PRESSURE-TYPE SANITARY SEWER, WASTEWATER FORCE MAIN, OR PIPELINE CONVEYING RECLAIMED WATER NOT REGULATED UNDER PART III OF CHAPTER 62-610 F.A.C.. THE MINIMUM HORIZONTAL SEPARATION DISTANCE BETWEEN WATER MAINS AND GRAVITY-TYPE SANITARY SEWERS SHALL BE REDUCED TO THREE FEET WHERE THE BOTTOM OF THE WATER MAIN IS LAID AT LEAST SIX INCHES ABOVE THE TOP OF THE SEWER.
19. NEW OR RELOCATED, UNDERGROUND WATER MAINS SHALL BE LAID TO PROVIDE A HORIZONTALDISTANCE OF AT LEAST TEN FEET, BETWEEN THE OUTSIDE OF THE WATER MAIN AND ALL PARTS OF ANY EXISTING OR PROPOSED "ON-SITE SEWAGE TREATMENT AND DISPOSAL SYSTEM" AS DEFINED IN SECTION 381.0065(2), F.S., AND RULE 64E-6.002, F.A.C.
20. NEW OR RELOCATED, UNDERGROUND WATER MAINS CROSSING ANY EXISTING OR PROPOSED GRAVITY- OR VACUUM-TYPE SANITARY SEWER OR STORM SEWER SHALL BE LAID SO THE OUTSIDE OF THE WATER MAIN IS AT LEAST SIX INCHES, AND PREFERABLY 12 INCHES, ABOVE OR AT LEAST 12 INCHES BELOW THE OUTSIDE OF THE OTHER PIPELINE. HOWEVER, IT IS PREFERABLE TO LAY THE WATER MAIN ABOVE THE OTHER PIPELINE.
21. NEW OR RELOCATED, UNDERGROUND WATER MAINS CROSSING ANY EXISTING OR PROPOSED PRESSURE TYPE SANITARY SEWER, WASTEWATER OR STORMWATER FORCE MAIN, OR PIPELINE CONVEYING RECLAIMED WATER SHALL BE LAID SO THE OUTSIDE OF THE WATER MAIN IS AT LEAST12 INCHES ABOVE OR BELOW THE OUTSIDE OF THE OTHER PIPELINE. HOWEVER, IT IS PREFERABLE TO LAY THE WATER MAIN ABOVE THE OTHER PIPELINE.
22. WITH RESPECT TO TIE-IN CONNECTIONS, THE CITY RESERVES THE RIGHT TO REQUIRE CONNECTIONS TO BE PERFORMED DURING PERIODS OF LOW FLOW (MIDNIGHT TO 6:00 A.M.) IN ORDER TO MINIMIZE SERVICE DISRUPTION TO EXISTING CUSTOMERS. THE INSTALLATION OF LINE STOPPING DEVICES ON PRESSURE MAIN (POTABLE WATER AND FORCE MAIN) MAY BE REQUIRED ON ANY REQUESTED UTILITY OUTAGE AT THE DISCRETION OF PUBLIC UTILITIES DEPARTMENT TO MINIMIZE INTERRUPTION TO EXISTING UTILITY CUSTOMERS.

STANDARD CONSTRUCTION DETAIL
POTABLE WATER DESIGN NOTES

FILE NAME W1.DOC
DETAIL REF: W-1
REV. 12/08

POTABLE WATER CONSTRUCTION NOTES

1. THE CITY'S PUBLIC UTILITIES DEPARTMENT (386) 506-5750 SHALL BE GIVEN A MINIMUM OF 2 BUSINESS DAYS ADVANCE NOTICE (NOT INCLUDING HOLIDAYS OR WEEKENDS) PRIOR TO BEGINNING ANY POTABLE WATER SYSTEM CONSTRUCTION.
2. DEWATERING SHALL BE PROVIDED TO KEEP GROUNDWATER ELEVATION A MINIMUM OF 6 INCHES BELOW WATER MAIN BEING LAID.
3. ALL WATER MAINS SHALL BE LAID ON A FIRM FOUNDATION WITH ALL UNSUITABLE MATERIAL (MUCK, ROCK, COQUINA, ETC.) REMOVED AND REPLACED WITH CLEAN GRANULAR MATERIAL.
4. TRENCHES SHALL BE BACKFILLED WITH MATERIAL ACCEPTABLE TO THE CITY WITH A MINIMUM COMPACTION OF 98% IN PAVED AREAS AND 95% IN UNPAVED AREAS IN ACCORDANCE WITH AASHTO T-180.
5. IT SHALL BE THE CONTRACTORS RESPONSIBILITY TO ENSURE THAT TRENCH COMPACTION TESTS BE PROVIDED AT POINTS 1 FOOT ABOVE THE PIPE AND AT 1 FOOT VERTICAL INTERVALS TO FINISH GRADE, AT A MINIMUM SPACING OF EVERY 300 FEET.
6. 3" METALLIZED PIPE LOCATION TAPE SHALL BE LOCATED BETWEEN 15" AND 24" BELOW FINISHED GRADE OR AS SPECIFIED BY MANUFACTURER FOR ALL PVC LINES. MARKER TAPE SHALL BE USED ON ALL DUCTILE IRON PIPE, AS WELL.
7. ALL WATER SERVICE ENDINGS SHALL BE MARKED WITH A 2" X 4" LUMBER (PRESSURE TREATED) EXTENDING 4 FEET ABOVE GRADE, WITH WATER SERVICES SECURED 12" MAXIMUM ABOVE THE GROUND. ALL SERVICES SHALL BE LOCKED AT THE TIME OF FINAL INSPECTION BY THE CONTRACTOR IN THE PRESENCE OF THE CITY INSPECTOR OR CITY PERSONNELL, AFTER THEY HAVE BEEN INSPECTED AND VERIFIED TO OPERATE PROPERLY.
8. AT ALL WATER MAIN TEES AND CROSSES, VALVES SHALL BE INSTALLED ON ALL LEGS EXCEPT ONE.
9. ALL WATER VALVES SHALL BE ADJUSTED TO FINISHED GRADE AND THE CAPS PAINTED BLUE TO MAKE THEM PLAINLY VISIBLE.
10. UPON FINAL ACCEPTANCE OF NEW WATER SYSTEMS, WATER VALVES SHALL BE COMPLETELY OPENED BY PUBLIC UTILITIES PERSONNEL. AT NO TIME SHALL CONTRACTOR OPERATE ANY EXISTING VALVES.
11. ALL FIRE HYDRANTS SHALL BE CONSTRUCTED TO MAKE THEM EASILY ACCESSIBLE TO FIRE PERSONNEL IN CASE OF A FIRE. THE PRIMARY HYDRANT PORT SHOULD ALWAYS FACE THE STREET.
12. AS STANDARD PRACTICE, WATER MAINS SHALL BE INSTALLED 4 FEET OFF THE BACK OF CURB OR AS APPROVED BY THE CITY.
13. ALL WATER MAINS SHALL BE NSF AND/OR AWWA APPROVED FOR POTABLE WATER USE, AND SHALL HAVE A MINIMUM COVER OF 36 INCHES (3.0 FEET) AND A MAXIMUM DEPTH OF 48 INCHES (4.0 FEET) FROM FINAL GRADE EXCEPT AT LOCATIONS OF UTILITY CROSSINGS OR WITH SPECIAL APPROVAL WHEN IT IS DETERMINED TO BE IN THE BEST INTEREST OF THE CITY.
14. WATER MAINS SHALL BE C-900 PVC OR C-905 CL 150 (COLOR"BLUE") OR D.I.P. PRESSURE CLASS 350 STANDARD CEMENT LINED UNLESS OTHERWISE APPROVED BY THE CITY.
15. UPON CONSTRUCTION COMPLETION AND ACCEPTANCE OF THE SYSTEM, IT SHALL BE THE DESIGN ENGINEER'S RESPONSIBILITY TO ENSURE THAT THE SYSTEM IS PROPERLY CERTIFIED AND ACCEPTED BY THE DEPARTMENT OF HEALTH AND AS-BUILTS ARE PROVIDED TO THE CITY PRIOR TO ANY PUBLIC USE OF THIS SYSTEM.
16. IN AREAS WHERE RECLAIMED WATER IS NOT AVAILABLE THE CONTRACTOR SHALL BE REQUIRED TO (UPON SATISFACTORY COMPLETION OF THE PRESSURE TEST) TRANSFER THE WATER FROM THE POTABLE WATER LINES TO THE RECLAIMED WATER LINES FOR UTILIZATION IN THEIR PRESSURE TEST.
17. ALL POTABLE WATER MAINS SHALL USE A THRUST RESTRAINT JOINT METHOD IN COMPLIANCE WITH THE DUCTILE IRON PIPE RESEARCH ASSOCIATION (DIPRA) GUIDELINES. IN THE EVENT THAT PVC PIPE IS SPECIFIED, THE

STANDARD CONSTRUCTION DETAIL
POTABLE WATER CONSTRUCTION NOTES

FILE NAME W2.DOC
DETAIL REF: W-2
REV. 12/08

POTABLE WATER CONSTRUCTION NOTES (CONT'D)

RESTRAINT JOINT SHALL BE MODIFIED IN ACCORDANCE WITH THE RECOMMENDED ADDITIONAL RESTRAINT LENGTH REQUIRED FOR PIPE WRAPPED WITH POLYETHYLENE.
18. MEGALUGS, BOLTLESS RESTRAINED JOINTS OR GRIPPER GASKETS SHALL BE USED ON ALL RESTRAINED JOINT INSTALLATIONS. MINIMUM DEPTH OF BURY ON PIPES NOT MEETING REQUIRED COVER REQUIREMENTS SHALL FOLLOW THE MOST RECENT DIPRA THRUST RESTRAINT DESIGN GUIDELINES USING TORQUE WRENCHES PER MANUFACTURERS RECOMMENDATION.
19. WATER SYSTEMS SHALL BE PRESSURE TESTED AT 150 PSI STATIC PRESSURE FOR A PERIOD OF 2 HOURS PER AWWA STANDARDS.
20. ALL WATER SERVICES SHALL BE MARKED WITH AN "/\" SAW CUT INTO THE CURB OR BY METAL TABS SET INTO THE PAVEMENT.
21. ALL WATER VALVES SHALL BE MARKED WITH AN "X" SAW CUT INTO THE CURB OR BY METAL TABS SET INTO THE PAVEMENT. BLOW-OFFS SHALL BE MARKED SIMILARLY, AS WELL. REVERSE TAPPING VALVE SHALL BE MARKED WITH AN "X ↑" SAW CUT INTO THE CURB OR PAVEMENT WITH THE ARROW POINTING TO THE DIRECTION OF THE PRESSURE MAIN RUN.
22. ALL TAPPING OF MAINS SHALL BE PERFORMED BY THE CITY AND BILLED IN ACCORDANCE WITH THE ADOPTED FEE RESOLUTION. SCHEDULING OF THESE CONNECTIONS OR TAPPINGS SHALL REQUIRE A MINIMUM OF 2 BUSINESS DAYS, DIRECTED TO THE CITY'S DESIGNATED SITE INSPECTOR WHO SHALL COORDINATE THE WORK DIRECTLY WITH THE PUBLIC UTILITIES DEPARTMENT. SUBSEQUENTLY, THE CONNECTION SHALL BE SCHEDULED TO COMMENCE BETWEEN 8:00 A.M. AND NOON ON THE APPROPRIATE DAY.
23. LARGE COMMERCIAL WATER AND RECLAIMED WATER METERS GREATER THAN 3" TAKE A MINIMUM OF 6 WEEKS FOR DELIVERY AFTER FEES ARE PAID TO THE CITY. IN ADDITION ALL METERS AND VAULTS 3" AND GREATER SHALL BE INSTALLED BY THE OWNER/ DEVELOPER/ CONTRACTOR. THE FEE COLLECTED BY THE CITY IS FOR MATERIALS ONLY. ALL METERS, 2" AND LESS, SHALL BE INSTALLED BY THE CITY.
24. THE CITY REQUIRES DOUBLE WATER SERVICE INSTALLATIONS WHEREVER FEASIBLE. WHEN DESIGN CONFLICTS EXIST, SINGLE WATER SERVICES MAY BE ALLOWED. THIS MAY APPLY AT STORMWATER INLETS, FIRE HYDRANTS, FPL TRANSFORMERS, ETC. AND OTHER LOCATIONS DEEMED APPROPRIATE BY THE CITY.
25. ALL PROPOSED POTABLE WATER MAINS SHALL BE FLUSHED, DISINFECTED, PRESSURE TESTED AND BACTERIOLOGICALLY CLEARED FOR SERVICE WHEN APPROPRIATE IN ACCORDANCE WITH THE LATEST AWWA STANDARDS AND THE FLORIDA DEPARTMENT OF ENVIROMENTAL PROTECTION REQUIREMENTS. THE CONTRACTOR SHALL NOTIFY THE CITY'S DESIGNATED SITE INSPECTOR WHO SHALL COORDINATE WITH CITY PERSONNEL AT THE WATER TREATMENT PLANT AT LEAST 2 BUSINESS DAYS PRIOR TO BEGINNING FLUSH OF THE MAINS AND PRIOR TO THE COMMENCEMENT OF PRESSURE TESTING.
26. THE CONTRACTOR SHALL BE REQUIRED TO PIG ALL POTABLE MAINS 6" AND LARGER IN DIAMETER AND PRIMARY DISTRIBUTION MAINS LOCATED ON COLLECTOR AND ARTERIAL ROADWAYS. ALL PIGS SHALL BE NEW. NO FOAM PIGS ARE ALLOWED. LAUNCHING AND EXTRACTION POINTS SHALL BE DETERMINED BY THE CONTRACTOR. ALL PIGGING OPERATIONS SHALL BE WITNESSED BY A PUBLIC UTILITIES REPRESENTATIVE OR A CITY UTILITY INSPECTOR.
27. WITH RESPECT TO TIE-IN CONNECTIONS, THE CITY RESERVES THE RIGHT TO REQUIRE CONNECTIONS TO BE PERFORMED DURING PERIODS OF LOW FLOW (MIDNIGHT TO 6:00 A.M.) IN ORDER TO MINIMIZE SERVICE DISRUPTION TO EXISTING CUSTOMERS. THE INSTALLATION OF LINE STOPPING DEVICES ON PRESSURE MAIN (POTABLE WATER AND FORCE MAIN) MAY BE REQUIRED ON ANY REQUESTED UTILITY OUTAGE AT THE DISCRETION OF PUBLIC UTILITIES DEPARTMENT TO MINIMIZE INTERRUPTION TO EXISTING UTILITY CUSTOMERS.

STANDARD CONSTRUCTION DETAIL
POTABLE WATER CONSTRUCTION NOTES

FILE NAME W2.DOC
DETAIL REF: W-2
REV. 12/08

POTABLE WATER CONSTRUCTION NOTES (CONT'D)

28. THE PHYSICAL TAKING OF EACH AND EVERY WATER SAMPLE FOR BACTERIOLOGICAL TESTING SHALL BE OBSERVED BY THE CITY'S DESIGNATED SITE INSPECTOR. THIS SHOULD NOT IMPACT THE PROJECT SINCE THE CONTRACTOR MUST ALREADY COORDINATE FLUSHING ACTIVITY WITH THE INSPECTOR. ALL SAMPLE FORMS SHALL BE COMPLETELY FILLED OUT BY THE SAMPLING COMPANY AND TESTING COMPANY IN ORDER TO BE ACCEPTED. WHEN THE PUBLIC UTILITIES OFFICE RECEIVES POTABLE WATER CLEARANCE REQUEST REQUIRING SIGNATURE THE CITY'S DISTRIBUTION SUPERVISOR AND/OR DESIGNATED SITE INSPECTOR WILL BE CONTACTED TO INDEPENDENTLY VERIFY THAT THE SYSTEM IS IN PROPERLY FUNCTIONING ORDER (i.e. ALL VALVES, HYDRANTS, AND WATER SERVICES ARE ACCESSIBLE AND OPERABLE). SIMULTANEOUSLY, THE CITY MAY ALSO TAKE A RANDOM BACTERIOLOGICAL SAMPLE WITHIN THE NEW SYSTEM TO VERIFY THAT WATER IS SAFE FOR CONSUMPTION. ONCE THE DISTRIBUTION SUPERVISOR AND/OR DESIGNATED SITE INSPECTOR HAVE VERIFIED THAT THE SYSTEM IS IN PROPER FUNCTIONING ORDER AND THAT THE BACTERIOLOGICAL SAMPLE INDICATES THE WATER IS SAFE FOR CONSUMPTION, THE PUBLIC UTILITIES OFFICE WILL THEN SIGN OFF ON THE WATER CLEARANCE REQUEST.
29. ALL WORK PERFORMED ON THE POTABLE WATER FACILITIES OWNED OR PROPOSED TO BE OWNED BY THE CITY SHALL BE CONSTRUCTED BY A STATE CERTIFIED UNDERGROUND UTILITY CONTRACTOR OR GENERAL CONTRACTOR LICENSED IN THE STATE OF FLORIDA AND REGISTERED WITH THE CITY.
30. FOR CONSTRUCTION PURPOSES, THE PLANS SHALL DIMENSION THE PROPOSED LOCATIONS OF ALL WATER MAINS MEASURED FROM THE BACK OF CURB (OR EDGE OF PAVEMENT, IF NO CURB IS USED).
31. NEWLY CONSTRUCTED POTABLE WATER SYSTEM EXTENSIONS MAY NOT BE USED PRIOR TO FINAL TESTING, CLEARANCE AND ACCEPTANCE BY THE CITY OF PORT ORANGE. THIS INCLUDES CONSTRUCTION WATER REQUIRED FOR SEWER LINE CLEANING OR RELATED USES.
32. FIRE HYDRANTS MAY NOT BE INSTALLED WITHIN 20' OF ANY ELECTRICAL TRANSFORMER
33. ALL H.D.P.E. PIPE UTILIZED FOR WATER, FORCE MAIN AND/OR RECLAIMED WATER MAIN EXTENSIONS SHALL BE S.D.R. 11 WITH #10 COPPERHEAD TRACER WIRE UNLESS SPECIFICALLY NOTED OTHERWISE. THE HDPE PIPE SHALL BE SIZED TO MATCH THE EXTERNAL DIAMETER OF THE PVC OR DIP PIPE TO WHICH IT IS ATTACHED.
34. ALL VALVES 2" AND LARGER SHALL BE STANDARD 2" RESILIENT SEATED GATE VALVES (CORP STOPS ARE NOT ACCEPTABLE).
35. ALL P.V.C. PIPE SHALL BE STORED IN SUCH A WAY AS TO PREVENT WARPING, DEFLECTION, OR ANY DEFORMATION. FITTINGS SHALL BE P.V.C. AND MANUFACTURED OF THE SAME DESIGN AS THE P.V.C. PIPE.
36. PVC FITTINGS 4-INCH THROUGH 36-INCH SHALL BE P.V.C. (OR D.I.P.WITH PROTECTO 401) INJECTION-MOLDED OR FABRICATED AS SPECIFIED, MADE OF MATERIALS MEETING OR EXCEEDING THE REQUIREMENTS OF CELL CLASS 12454-B MATERIAL AS DEFINED IN ASTM D1784. FABRICATED FITTINGS SHALL BE MANUFACTURED WITH PIPE THAT MEETS OR EXCEEDS AWWA C-905 STANDARD, AND SHALL BE FIBERGLASS REINFORCED TO A PRESSURE RATING OF 165 PSI. ALL P.V.C. OR MECHANICAL JOINT FITTINGS MUST COMPLY WITH OR EXCEED ANSI/AWWA C907, UNI-B-14 STANDARDS AS THEY APPLY TO THE APPROPRIATE SIZE RANGE AND METHOD OF MANUFACTURE.
37. NO USED, RE-USED, RUSTED, SECOND HAND, OR ANY MATERIAL THAT IS NOT NEW SHALL BE USED IN ANY UTILITY IMPROVEMENT PROJECTS WITHIN THE CITY'S SERVICE AREA.
38. NEW OR RELOCATED, UNDERGROUND WATER MAINS SHALL BE LAID TO PROVIDE A HORIZONTAL DISTANCE OF AT LEAST THREE FEET BETWEEN THE OUTSIDE OF THE WATER MAIN AND THE OUTSIDE OF ANY EXISTING OR PROPOSED STORM SEWER, STORMWATER FORCE MAIN, OR PIPELINE CONVEYING RECLAIMED WATER REGULATED UNDER PART III OF CHAPTER 62-610, F.A.C.
39. NEW OR RELOCATED, UNDERGROUND WATER MAINS SHALL BE LAID TO PROVIDE A HORIZONTAL DISTANCE OF AT LEAST SIX FEET, AND PREFERABLY TEN FEET, BETWEEN THE OUTSIDE OF ANY EXISTING OR PROPOSED VACUUM-TYPE SANITARY SEWER.
40. NEW OR RELOCATED, UNDERGROUND WATER MAINS SHALL BE LAID TO PROVIDE A HORIZONTAL DISTANCE OF AT LEAST SIX FEET, AND PREFERABLY TEN FEET, BETWEEN THE OUTSIDE OF THE WATER MAIN AND THE OUTSIDE OF ANY EXISTING OR PROPOSED GRAVITY- OR PRESSURE-TYPE SANITARY SEWER, WASTEWATER FORCE MAIN, OR PIPELINE CONVEYING RECLAIMED WATER NOT REGULATED UNDER PART III OF CHAPTER 62-610 F.A.C.. THE MINIMUM HORIZONTAL SEPARATION DISTANCE BETWEEN WATER MAINS AND GRAVITY-TYPE SANITARY SEWERS SHALL BE REDUCED TO THREE FEET WHERE THE BOTTOM OF THE WATER MAIN IS LAID AT LEAST SIX INCHES ABOVE THE TOP OF THE SEWER.
41. NEW OR RELOCATED, UNDERGROUND WATER MAINS CROSSING ANY EXISTING OR PROPOSED GRAVITY- OR VACUUM-TYPE SANITARY SEWER OR STORM SEWER SHALL BE LAID SO THE OUTSIDE OF THE WATER MAIN IS AT LEAST SIX INCHES, AND PREFERABLY 12 INCHES, ABOVE OR AT LEAST 12 INCHES BELOW THE OUTSIDE OF THE OTHER PIPELINE. HOWEVER, IT IS PREFERABLE TO LAY THE WATER MAIN ABOVE THE OTHER PIPELINE.
42. NEW OR RELOCATED, UNDERGROUND WATER MAINS CROSSING ANY EXISTING OR PROPOSED PRESSURE TYPE SANITARY SEWER, WASTEWATER OR STORMWATER FORCE MAIN, OR PIPELINE CONVEYING RECLAIMED WATER SHALL BE LAID SO THE OUTSIDE OF THE WATER MAIN IS AT LEAST 12 INCHES ABOVE OR BELOW THE OUTSIDE OF THE OTHER PIPELINE. HOWEVER, IT IS PREFERABLE TO LAY THE WATER MAIN ABOVE THE OTHER PIPELINE.
43. AT THE UTILITY CROSSINGS, ONE FULL LENGTH OF WATER MAIN PIPE SHALL BE CENTERED ABOVE OR BELOW THE OTHER PIPELINE SO THE WATER MAIN JOINTS WILL BE AS FAR AS POSSIBLE FROM THE OTHER PIPELINE. ALTERNATIVELY, AT SUCH CROSSINGS, THE PIPES SHALL BE ARRANGED SO THAT ALL WATER MAIN JOINTS ARE AT LEAST THREE FEET FROM ALL JOINTS IN VACUUM-TYPE SANITARY SEWERS, STORM SEWERS, STORMWATER FORCE MAINS OR PIPELINES CONVEYING RECLAIMED WATER REGULATED UNDER PART III OF CHAPTER 62-610 F.A.C. AND AT LEAST SIX FEET FROM ALL JOINTS IN GRAVITY OR PRESSURE TYPE SANITARY SEWERS, WASTEWATER FORCE MAINS, OR PIPELINES CONVEYING RECLAIMED WATER NOT REGULATED UNDER PART III OF CHAPTER 62-610, F.A.C.
44. WATER MAINS SHALL BE C-900 PVC OR C-905 CL 150 (COLOR"BLUE") OR D.I.P. PRESSURE CLASS 350 STANDARD CEMENT LINED UNLESS OTHERWISE APPROVED BY THE CITY.

STANDARD CONSTRUCTION DETAIL
POTABLE WATER CONSTRUCTION NOTES

FILE NAME W2.DOC
DETAIL REF: W-2
REV. 12/08

City of Port Orange Public Utilities Department
List of Approved Products

Potable Water 12/08

Fire Hydrant (5 ¼" Barrel)

MANUFACTURER	MODEL #
Mueller	A423 Super Centurion 250
American AVK Co.	Series #2780
American Darling	5 ¼" B-84-B5
Clow	Medallion # F-2545 SS

Air Release Valves

MANUFACTURER	MODEL #
Val-Matic	Series 38

Gate Valves and Tapping Valves – Resilient Seated (AWWA C509 and C515) 24" or Smaller (Valve wedge to be complete enclosed with EPDM rubber)

MANUFACTURER	MODEL #
American AVK Co.	Series 3, 18, 25, 45, 55, & 66
Clow	Model 2638 and 2639
Mueller	A-2360, A-2361, T-2360 & T-2361
American Flow Control	Series 2500

STANDARD CONSTRUCTION DETAIL
POTABLE WATER APPROVED PRODUCTS

FILE NAME W3.DOC
DETAIL REF: W-3

City of Port Orange Public Utilities Department
List of Approved Products

Potable Water 12/08

Joints Restrained – DIP and PVC

MANUFACTURER	MODEL #
EBBA Iron Inc.	Series 1100/1500/1600 2000/2500/2800
Star Pipe	Stargrip Series 1000/1100/1200 3000/ 4000
Sigma	One-Lock SLD; One-Lock SLC; PV-Lok for PVC
Smith-Blair	Cam-Lock {111 & 120} ; Bell-Lock {115 & 165}

Water Service Materials

Polyethylene Tubing – (Blue with UV Protection (SDR-9) 1" & 2" only)

MANUFACTURER	MODEL #
Endot Endopure	Endotrace w/#10 Copperhead Tracer Wire

Corporation Stop 1"

MANUFACTURER	MODEL #
Ford	F-1100-4

Curb Stop – Straight Ball Meter Valve w/ Barrel Locks

MANUFACTURER	MODEL #
Ford	B-94-324W {Single Service} B-91-223W {Double Service}

"U" Branch (1" x ¾")

MANUFACTURER	MODEL #
Ford	U-48-43-6.5

STANDARD CONSTRUCTION DETAIL
POTABLE WATER APPROVED PRODUCTS

FILE NAME W3.DOC
DETAIL REF: W-3

Dewberry

Dewberry Engineers Inc.
800 NORTH MAGNOLIA AVE
ORLANDO, FL 32803
SUITE 1000
PHONE: 407.843.5120
ENGINEERING BUSINESS -8794

WESTPORT RESERVE
(PHASE 2B)
PORT ORANGE, FL

SEAL

7/1/2016

No.	DATE	BY	Description

REVISIONS

DRAWN BY TFS
APPROVED BY DMV
CHECKED BY NPS
DATE JANUARY 2016
DATUM NAVD 88

TITLE

CITY
WATER
DETAILS

PROJECT NO. 50079046 (CC 1)

C27

SHEET NO.

...\CC1-SF PH1 CityWaterDetails-01.dgn
3:51:14 PM

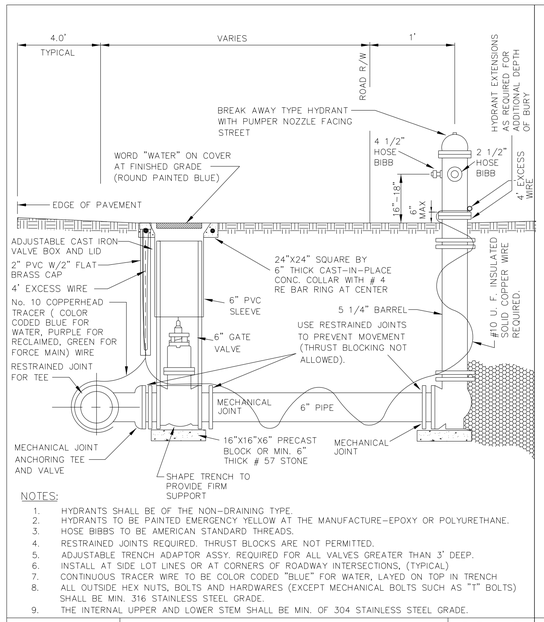

NOTES:

1. HYDRANTS SHALL BE OF THE NON-DRAINING TYPE.
2. HYDRANTS TO BE PAINTED EMERGENCY YELLOW AT THE MANUFACTURE-EPOXY OR POLYURETHANE.
3. HOSE BIBBS TO BE AMERICAN STANDARD THREADS.
4. RESTRAINED JOINTS REQUIRED. THRUST BLOCKS ARE NOT PERMITTED.
5. ADJUSTABLE TRENCH ADAPTOR ASSY. REQUIRED FOR ALL VALVES GREATER THAN 3' DEEP.
6. INSTALL AT SIDE LOT LINES OR AT CORNERS OF ROADWAY INTERSECTIONS, (TYPICAL)
7. CONTINUOUS TRACER WIRE TO BE COLOR CODED "BLUE" FOR WATER, LAYED ON TOP IN TRENCH
8. ALL OUTSIDE HEX NUTS, BOLTS AND HARDWARES (EXCEPT MECHANICAL BOLTS SUCH AS "T" BOLTS) SHALL BE MIN. 316 STAINLESS STEEL GRADE.
9. THE INTERNAL UPPER AND LOWER STEM SHALL BE MIN. OF 304 STAINLESS STEEL GRADE.

STANDARD CONSTRUCTION DETAIL FIRE HYDRANT ASSEMBLY REV. 12/08	FILE NAME: W4.DWG DETAIL REF: W-4

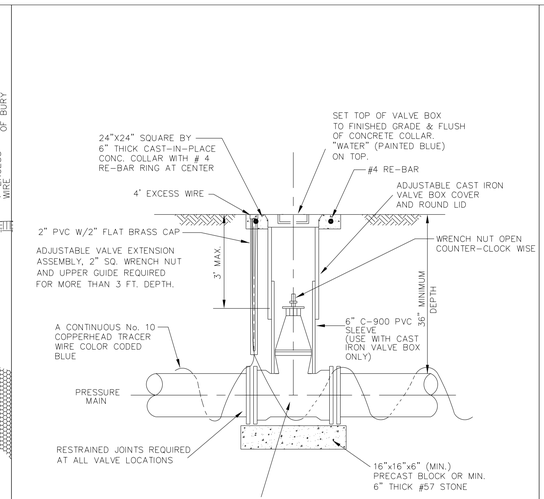

NOTE:

1. BOLT VALVES TO TEE OR CROSS WHEREVER AND WHENEVER APPLICABLE.
2. A CONTINUOUS TRACER WIRE TO BE COLOR CODED "BLUE" FOR WATER, LAYED ON TOP IN TRENCH
3. GATE VALVE WEDGE SHALL BE COMPLETELY ENCAPSULATED WITH EPDM RUBBER.
4. ALL OUTSIDE HEX NUTS, BOLTS AND HARDWARES (EXCEPT MECHANICAL BOLTS SUCH AS "T" BOLTS) SHALL BE MIN. 316 STAINLESS STEEL GRADE.

STANDARD CONSTRUCTION DETAIL POTABLE WATER VALVE AND VALVE BOX (4" – 16" VALVE SIZES) REV. 12/08	FILE NAME: W5.DWG DETAIL REF: W-5

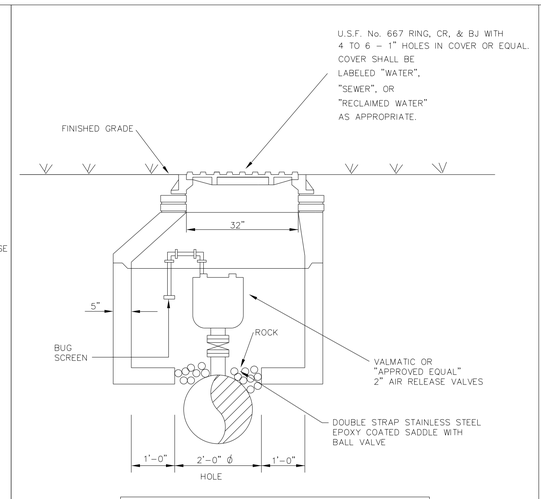

NOTE: USE FOR WATER OR RECLAIMED WATER ALSO

NOTE: ALL AIR RELEASE MANHOLES MUST HAVE MANHOLE COVERS THAT WILL VENT GASSES

STANDARD CONSTRUCTION DETAIL AIR RELEASE VALVE PIT REV. 12/08	FILE NAME: W7.DWG DETAIL REF: W-7

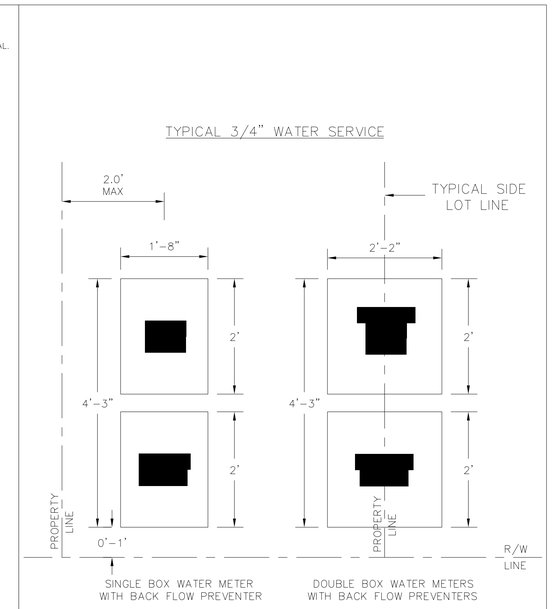

STANDARD CONSTRUCTION DETAIL METER BOX LAYOUT REV. 12/08	FILE NAME: W8.DWG DETAIL REF: W-8

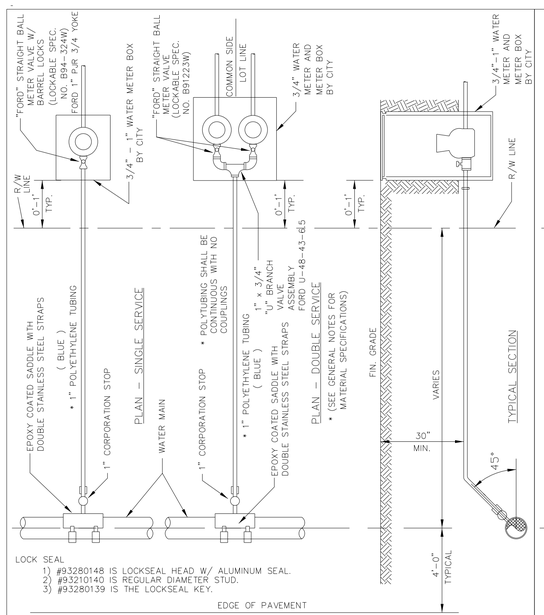

STANDARD CONSTRUCTION DETAIL WATER SERVICE (METER SIZES 3/4"–1") REV. 12/08	FILE NAME: W9.DWG DETAIL REF: W-9

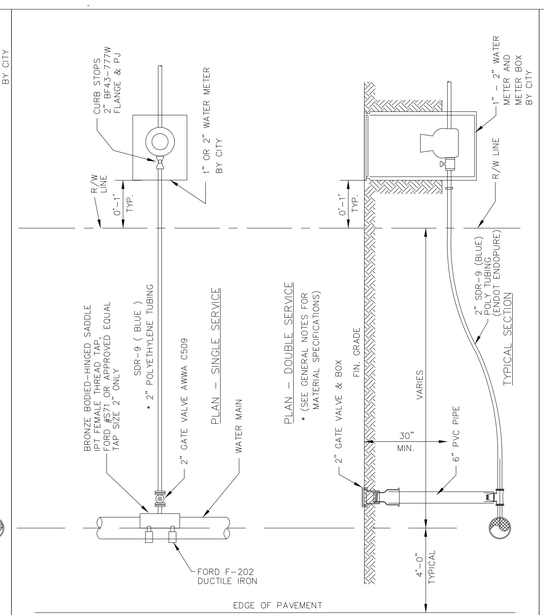

STANDARD CONSTRUCTION DETAIL WATER SERVICE (METER SIZES 1" OR 2") REV. 12/08	FILE NAME: W11.DWG DETAIL REF: W-11

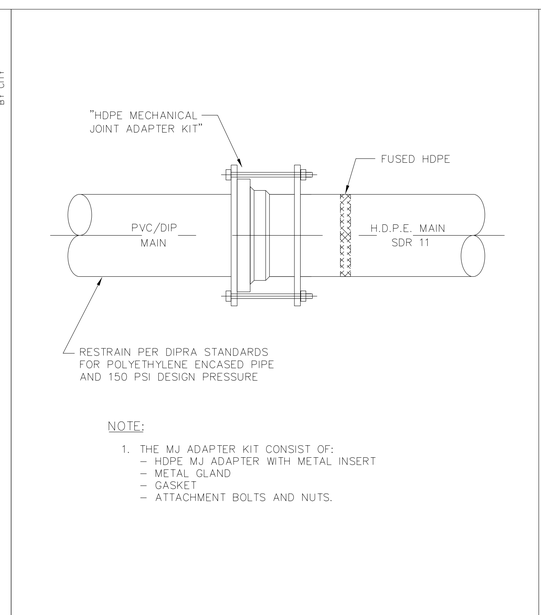

NOTE:

1. THE MJ ADAPTER KIT CONSIST OF:
   - HDPE MJ ADAPTER WITH METAL INSERT
   - METAL GLAND
   - GASKET
   - ATTACHMENT BOLTS AND NUTS.

STANDARD CONSTRUCTION DETAIL P.V.C. TO H.D.P.E. RESTRAINED JOINT REV. 12/08	FILE NAME: W14.DWG DETAIL REF: W-14

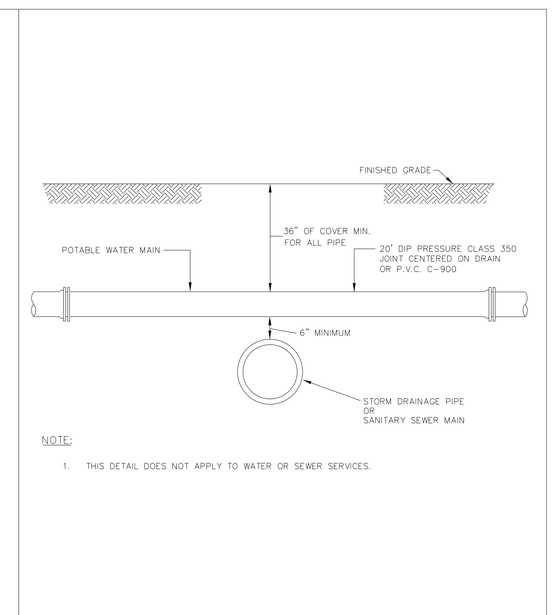

NOTE:

1. THIS DETAIL DOES NOT APPLY TO WATER OR SEWER SERVICES.

STANDARD CONSTRUCTION DETAIL STORM DRAINAGE PIPE OR SANITARY SEWER MAIN CONFLICT REV. 12/08	FILE NAME: W19.DWG DETAIL REF: W-19

Dewberry

Dewberry Engineers Inc.
800 NORTH MAGNOLIA AVE
ORLANDO, FL 32803
SUITE 1000
PHONE: 407.843.5120
ENGINEERING BUSINESS -8794

WESTPORT RESERVE (PHASE 2B)

PORT ORANGE, FL

SEAL

7/1/2016

No.	DATE	BY	Description

REVISIONS

DRAWN BY	TFS
APPROVED BY	DMV
CHECKED BY	NPS
DATE	JANUARY 2016
DATUM	NAVD 88

TITLE

CITY WATER DETAILS

PROJECT NO. 50079046 (CC 1)

C28

SHEET NO.

...\CC1-SF PH1 CityWaterDetails-02.dgn 3:51:55 PM

CONCRETE ENCASEMENT OF SANITARY SEWER IS AN ALTERNATIVE METHOD OF ADDRESSING A CONFLICT WHEN UNABLE TO MAINTAIN 18" VERTICAL SEPARATION DISTANCE. IN SUCH INSTANCES, THE MINIMUM PIPE VERTICAL SEPARATION SHALL BE 12".

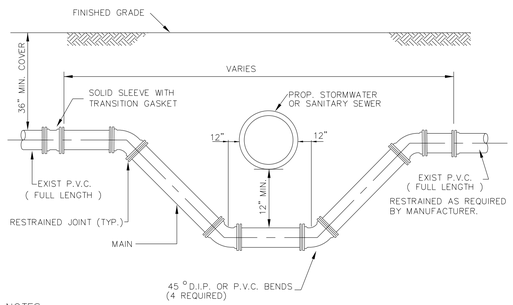

NOTES:

1. LOWERING OF EXISTING WATER MAIN & FORCE MAIN BY DEFLECTION METHOD ACCEPTABLE IF EXISTING FIELD CONDITIONS PERMIT.
2. LENGTH OF SECTION BASED ON MINIMUM LENGTH AS DETERMINED BY DIPRA RESTRAINED JOINT MANUAL.
3. INSTALL RESTRAINED JOINTS, AS REQUIRED, FROM DEFLECTION POINT IN BOTH DIRECTIONS.

STANDARD CONSTRUCTION DETAIL
STORM DRAINAGE PIPE OR SANITARY SEWER MAIN CONFLICT
REV. 12/08
FILE NAME: W20.DWG
DETAIL REF: W-20

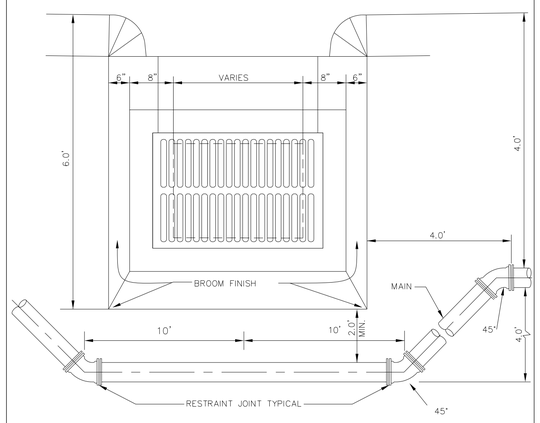

NOTES:

1. MAIN MAY PASS OVER STORM LINE IF 36" OF COVER IS PROVIDED OVER WATER MAIN OR RECLAIMED WATER LINE AND ADEQUATE CLEARANCE IS PROVIDED FROM THE STORM SEWER PIPE.
2. PIPE SHALL BE DEFLECTED AROUND DRAINAGE INLET IN ACCORDANCE WITH THE RESTRAINED JOINT GUIDELINES OF THE DIPRA AND ADAPTED TO PVC PIPE AS NECESSARY.

STANDARD CONSTRUCTION DETAIL
MAIN INSTALLATION BETWEEN DRAINAGE INLET AND SIDEWALK
REV. 12/08
FILE NAME: W21.DWG
DETAIL REF: W-21

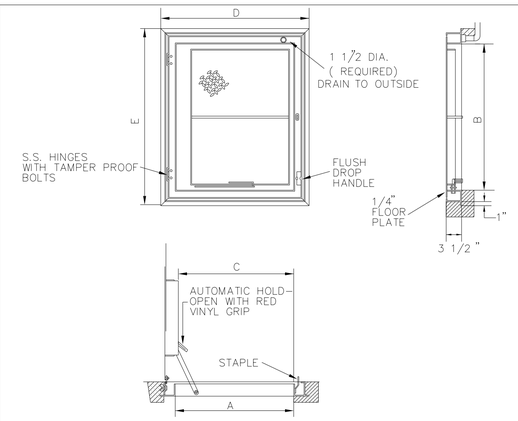

TYPE	MAT'L THK	SIZE A	SIZE B	ACTUAL OPEN. A	ACTUAL OPEN. C	OVERALL SIZE D	OVERALL SIZE E	WEIGHT LBS.
300 P.S.F. LOADING								
TPS	1/4	24	24	24	24	32	32	60
TPS	1/4	24	30	24	30	32	38	70
TPS	1/4	24	36	23	36	32	44	75
TPS	1/4	30	30	29	30	38	38	80
TPS	1/4	30	36	29	36	38	44	90
TPS	1/4	30	48	29	48	38	56	105
TPS	1/4	36	36	34	36	44	44	100
TPS	1/4	36	48	34	48	44	56	120
TPS	1/4	42	42	40	42	50	50	125

NOTES:

1. HATCH MATERIAL SHALL BE ALUMINUM WITH STAINLESS STEEL BOLTS, NUTS AND HINGES, LOAD RATING OF 300 LBS PER SQ. FOOT WITH A SELF DRAINING HATCH.
2. THE ACCESS DOOR SHALL BE TYPE TPS AS MANUFACTURED BY U.S. FOUNDRY AND MANUFACTURING CORP., MIAMI, FLORIDA.

STANDARD CONSTRUCTION DETAIL
TROUGH FRAME PEDESTRIAN LOADING ACCESS SINGLE DOOR
REV. 12/08
FILE NAME: W24.DWG
DETAIL REF: W-24

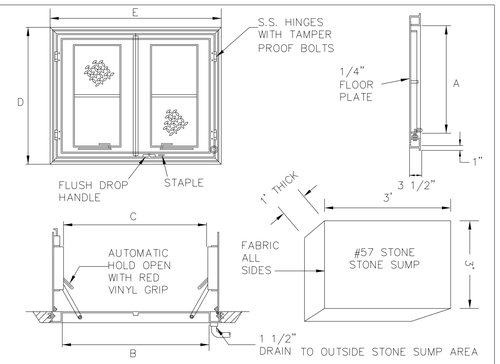

TYPE	MAT'L THK	SIZE A	SIZE B	ACTUAL OPENING A	ACTUAL OPENING C	OVERALL SIZE D	OVERALL SIZE E	WEIGHT LBS.
300 P.S.F. LOADING								
TPD	1/4	30	48	30	47	38	56	110
TPD	1/4	30	54	30	53	38	62	120
TPD	1/4	36	48	36	46	44	44	125
TPD	1/4	36	60	36	57	44	68	145
TPD	1/4	42	48	42	45	50	56	140
TPD	1/4	48	48	48	44	56	56	155
TPD	1/4	48	54	48	50	56	62	165
TPD	1/4	48	72	48	66	56	80	210
TPD	1/4	60	60	60	56	68	68	220

NOTES:

1. HATCH MATERIAL SHALL BE ALUMINUM WITH STAINLESS STEEL BOLTS, NUTS AND HINGES, LOAD RATING OF 300 LBS. PER SQ. FOOT WITH A SELF DRAINING HATCH.
2. THE ACCESS DOOR SHALL BE TYPE TPS AS MANUFACTURED BY U.S. FOUNDRY AND MANUFACTURING CORP., MIAMI, FLORIDA.

STANDARD CONSTRUCTION DETAIL
TROUGH FRAME PEDESTRIAN LOADING ACCESS DOUBLE DOOR
REV. 12/08
FILE NAME: W25.DWG
DETAIL REF: W-25

U.S. FOUNDRY MODEL NO.	BILCO MODEL NO	SINGLE LEAF	DOUBLE LEAF	ALUMINUM	TROUGH
TPS 24X24 W/OP	J-1AL	*		*	*
TPS 30X30 W/OP	J-2AL	*		*	*
TPS 30X36 W/OP	J-3AL	*		*	*
TPS 36X36 W/OP	J-4AL	*		*	*
TPS 42X42 W/OP	J-5AL			*	*
TPD 48X48 W/OP	JD-2AL		*	*	*
TPD 48X72 W/OP	JD-3AL		*	*	*
TPD 60X60 W/OP	JD-4AL		*	*	*

STANDARD CONSTRUCTION DETAIL
ACCESS DOOR CROSS REFERENCE CHART
REV. 12/08
FILE NAME: W26.DWG
DETAIL REF: W-26

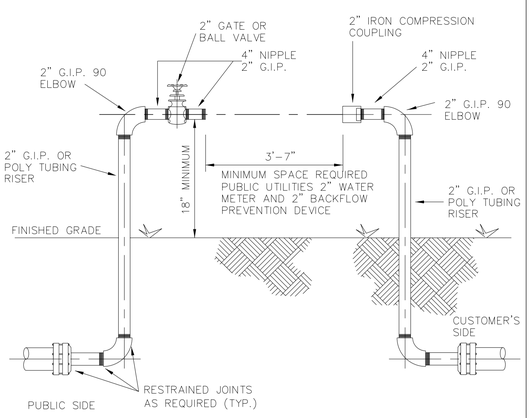

NOTE:

1. PROVIDE SUPPORT OR PROTECTIVE POSTS.

STANDARD CONSTRUCTION DETAIL
CONTRACTORS' INSTALLATION REQUIREMENTS FOR A 2" TEMPORARY METER
REV. 12/08
FILE NAME: W28.DWG
DETAIL REF: W-28

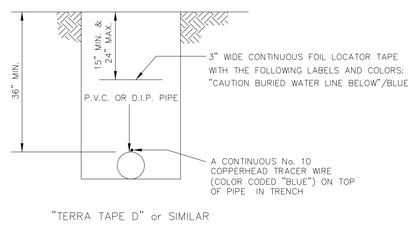

NOTE:

1) A CONTINUOUS No. 10 COPPERHEAD TRACER WIRE TO BE INSTALLED WITH ALL NON-METALLIC PIPE. WIRE SHALL BE BROUGHT UP TO GRADE AT ALL VALVES OUTSIDE P.V.C. SLEEVE, (SEE DETAIL W-6).

2) ALL TRACER WIRES SHALL BE INTERCONNECTED WITH WATER PROOF WIRE NUT CAP OR WITH SIMILAR WATER PROOF SPLICE KIT AT ANY SPLICE AND WHERE SERVICES CONNECT TO MAINS.

3) A SUCCESSFUL CONTINUITY TEST SHALL BE CONDUCTED AND WITNESSED BY A CITY INSPECTOR AT THE COMPLETION OF TRACER WIRE INSTALLATION.

STANDARD CONSTRUCTION DETAIL
LOCATOR TAPE/ TRACERWIRE INSTALLATION FOR WATER MAIN, PIPELINES
REV. 12/08
FILE NAME: W29.DWG
DETAIL REF: W-29

Dewberry

Dewberry Engineers Inc.
800 NORTH MAGNOLIA AVE
ORLANDO, FL 32803
SUITE 1000
PHONE: 407.843.5120
ENGINEERING BUSINESS -8794

WESTPORT RESERVE (PHASE 2B)

PORT ORANGE, FL

SEAL

7/1/2016

No.	DATE	BY	Description

REVISIONS

DRAWN BY TFS
APPROVED BY DMV
CHECKED BY NPS
DATE JANUARY 2016
DATUM NAVD 88

TITLE

CITY WATER DETAILS

PROJECT NO. 50079046 (CC 1)

C29

SHEET NO.

...\CC1-SF PH1 CityWaterDetails-03.dgn 3:51:59 PM

RECLAIMED WATER DESIGN NOTES

1. ALL RECLAIMED WATER MAINS SHALL BE LAID ON A FIRM FOUNDATION WITH ALL UNSUITABLE MATERIAL (MUCK, ROCK, COQUINA, ETC.) REMOVED AND REPLACED WITH CLEAN GRANULAR MATERIAL. ALL RECLAIMED WATER MAINS SHALL HAVE A MINIMUM COVER OF 36 INCHES (3.0 FEET) AND A MAXIMUM DEPTH OF 48 INCHES (4.0 FEET) FROM FINAL GRADE EXCEPT AT LOCATIONS OF UTILITY CROSSINGS OR WITH SPECIAL APPROVAL WHEN IT IS DETERMINED TO BE IN THE BEST INTEREST OF THE CITY.
2. RECLAIMED WATER VALVES SHALL BE PLACED AT ALL STREET INTERSECTIONS AND AT MAXIMUM SPACINGS OF 1000.0 FEET.
3. AT ALL RECLAIMED WATER MAIN TEES AND CROSSES, VALVES SHALL BE INSTALLED ON ALL LEGS EXCEPT ONE.
4. AS STANDARD PRACTICE RECLAIMED WATER MAINS SHALL BE INSTALLED 4 FEET OFF THE BACK OF THE CURB ON THE OPPOSITE SIDE OF THE POTABLE WATER LINES OR AS APPROVED BY THE CITY.
5. RECLAIMED WATER SERVICES SHALL BE NORMALLY DOUBLE 1 1/2" SERVICES LOCATED AT SIDE LOT LINES ALTERNATING WITH POTABLE WATER SERVICE LOCATIONS. IN INSTANCES WHERE RECLAIM WATER SERVICES NEED TO BE OFFSET, 1" SINGLE SERVICES SHALL BE SPECIFIED. THESE SERVICES MAY BE OFFSET FROM THE LOT LINE A MAXIMUM DISTANCE OF 2.0'.
6. MAXIMUM OBTAINABLE SEPARATION OF PUBLIC RECLAIMED WATER MAINS, STORMWATER MAINS, AND SANITARY SEWER MAINS SHALL BE MAINTAINED. A MINIMUM HORIZONTAL SEPARATION OF FIVE (5) FEET (CENTER TO CENTER) OR THREE (3) FEET (OUTSIDE TO OUTSIDE) SHALL BE MAINTAINED BETWEEN RECLAIMED WATER MAINS AND SEWAGE MAINS. WHERE RECLAIMED WATER AND SANITARY SEWAGE MAINS CROSS WITH LESS THAN EIGHTEEN (18) INCHES VERTICAL CLEARANCE, THE SANITARY SEWAGE MAIN SHALL BE TWENTY (20) FEET OF EITHER CONCRETE ENCASED PVC PIPE OR ENCASED IN A WATERTIGHT CARRIER PIPE, CENTERED ON THE POINT OF CROSSING.
7. A 75 FOOT SETBACK DISTANCE SHALL BE PROVIDED FROM PUBLIC ACCESS REUSE WETTED AREAS TO ANY PUBLIC AND ANY PRIVATE POTABLE WATER SUPPLY WELLS.
8. LOW TRAJECTORY NOZZLES ARE REQUIRED WITHIN 100 FEET OF PUBLIC EATING, DRINKING OR BATHING FACILITIES.
9. FOR CONSTRUCTION PURPOSES, THE PLANS SHALL DIMENSION THE PROPOSED LOCATIONS OF ALL RECLAIMED WATER MAINS MEASURED FROM THE BACK OF CURB (OR EDGE OF PAVEMENT IF NO CURB EXISTS).
10. ALL H.D.P.E. PIPE RECLAIMED WATER MAINS SHALL BE S.D.R.11 UNLESS SPECIFICALLY NOTED OTHERWISE. THE HDPE PIPE SHALL BE SIZED TO MATCH THE EXTERNAL DIAMETER OF THE PVC OR DIP PIPE TO WHICH IT IS ATTACHED.
11. LANDSCAPE PLANS SHALL CLEARLY DEPICT THE DESIGN LOCATION OF PLANTINGS RELATIVE TO THE LOCATION OF PUBLIC UTILITIES AND STORMWATER INFRASTRUCTURE IN ORDER TO EVALUATE POTENTIAL CONFLICTS.
12. LARGE COMMERCIAL WATER AND RECLAIMED WATER METERS GREATER THAN 2" TAKE A MINIMUM OF 6 WEEKS FOR DELIVERY AFTER FEES ARE PAID TO THE CITY. IN ADDITION ALL METERS AND VAULTS 2" AND GREATER SHALL BE INSTALLED BY THE OWNER/ DEVELOPER/ CONTRACTOR. THE FEE COLLECTED BY THE CITY IS FOR MATERIALS ONLY. ALL METERS, 1 1/2" AND LESS, SHALL BE INSTALLED BY THE CITY.
13. THE CITY REQUIRES DOUBLE SERVICE INSTALLATIONS WHEREVER FEASIBLE. WHEN DESIGN CONFLICTS EXIST, SINGLE SERVICES MAY BE ALLOWED. THIS MAY APPLY AT STORMWATER INLETS, FIRE HYDRANTS, FPL TRANSFORMERS, ETC. AND OTHER LOCATIONS DEEMED APPROPRIATE BY THE CITY.

STANDARD CONSTRUCTION DETAIL
RECLAIMED WATER DESIGN NOTES

FILE NAME RW1.DOC
DETAIL REF: RW-1
REV. 12/08

RECLAIMED WATER CONSTRUCTION NOTES

1. THE CITY'S PUBLIC UTILITIES DEPARTMENT (386) 506-5750 SHALL BE GIVEN A MINIMUM OF 2 BUSINESS DAYS ADVANCE NOTICE (NOT INCLUDING HOLIDAYS OR WEEKENDS) PRIOR TO BEGINNING ANY RECLAIMED WATER SYSTEM CONSTRUCTION.
2. DEWATERING SHALL BE PROVIDED TO KEEP GROUNDWATER ELEVATION A MINIMUM OF 6 INCHES BELOW RECLAIMED WATER MAIN BEING LAID.
3. ALL RECLAIMED WATER MAINS SHALL BE LAID ON A FIRM FOUNDATION WITH ALL UNSUITABLE MATERIAL (MUCK, ROCK, COQUINA, ETC.) REMOVED AND REPLACED WITH CLEAN GRANULAR MATERIAL. ALL RECLAIMED WATER MAINS SHALL HAVE A MINIMUM COVER OF 36 INCHES (3.0 FEET) AND A MAXIMUM DEPTH OF 48 INCHES (4.0 FEET) FROM FINAL GRADE EXCEPT AT LOCATIONS OF UTILITY CROSSINGS OR WITH SPECIAL APPROVAL WHEN IT IS DETERMINED TO BE IN THE BEST INTEREST OF THE CITY.
4. TRENCHES SHALL BE BACKFILLED WITH MATERIAL ACCEPTABLE TO THE CITY WITH AMINIMUM COMPACTION OF 98% IN PAVED AREAS AND A MINIMUM COMPACTION OF 95 % IN UNPAVED AREAS ACCORDANCE WITH AASHTO T-180.
5. IT SHALL BE THE CONTRACTORS RESPONSIBILITY TO ENSURE THAT TRENCH COMPACTION TESTS BE PROVIDED AT POINTS 1 FOOT ABOVE THE PIPE AND AT 1 FOOT VERTICAL INTERVALS TO FINISH GRADE, AT A MINIMUM SPACING OF EVERY 300 FEET.
6. 3" METALLIZED PIPE LOCATION TAPE SHALL BE LOCATED BETWEEN 15" AND 24" BELOW FINISHED GRADE OR AS SPECIFIED BY MANUFACTURER FOR ALL PVC LINES. MARKER TAPE SHALL BE PROVIDED ON ALL DIP PIPE ALSO.
7. ALL SINGLE RESIDENTIAL WATER SERVICES SHALL BE 1" AND DOUBLE RESIDENTIAL SERVICES SHALL BE 1 1/2". SERVICES SHALL BE CTS 3408 HIGH DENSITY POLYETHYLENE TUBING RATED FOR A MINIMUM OF 200 PSI WITH SDR 9 (CTS). THE TUBING SHALL HAVE A VIRGIN HIGH DENSITY POLYETHYLENE CENTER FOR WHICH THE MANUFACTURER SHALL FURNISH A CERTIFICATE OF PURITY. THE TUBING SHALL BE LAVENDER IN COLOR AND SHALL HAVE THE WORDS "RECLAIMED WATER" PERMANENTLY PRINTED ON THE OUTSIDE. THE TUBING SHALL HAVE U.V. PROTECTION AND SHALL NOT BE AFFECTED BY DIRECT SUNLIGHT. THE TUBING SHALL COMPLY WITH OR EXCEED THE APPLICABLE STANDARDS OF A.S.D.M. D1248, D3350, D2239, D2737, N.S.F.-14 AND A.W.W.A. C901 AND SHALL COME WITH A LIFETIME WARRANTY. APPROVED SIZES: 1", 1-1/2" AND 2" DIAMETERS.
8. ALL RECLAIMED WATER SERVICE ENDINGS SHALL BE MARKED WITH A 2" X 4" LUMBER (PRESSURE TREATED) EXTENDING 4 FEET ABOVE GRADE, WITH WATER SERVICES SECURED 12" MAXIMUM ABOVE THE GROUND AND ANY "U" BRANCHES FOR DOUBLE SERVICES SHALL BE 12" ABOVE GROUND LEVEL. ALL SERVICES SHALL BE LOCKED.
9. ALL RECLAIMED WATER VALVES SHALL BE ADJUSTED TO FINISH GRADE AND THE CAPS SHALL BE PAINTED LAVENDER OR PURPLE TO MAKE THEM PLAINLY DISTINGUISHABLE.
10. AS STANDARD PRACTICE RECLAIMED WATER MAINS SHALL BE INSTALLED 4 FEET OFF THE BACK OF THE CURB ON THE OPPOSITE SIDE OF THE POTABLE WATER LINES OR AS APPROVED BY THE CITY.
11. ALL RECLAIMED WATER MAINS SHALL HAVE A MINIMUM COVER OF 36 INCHES. IN SPECIAL CASES WHERE IT IS IMPOSSIBLE OR INAPPROPRIATE TO PROVIDE ADEQUATE COVER, DUCTILE IRON PRESSURE CLASS 350 OR CONCRETE ENCASEMENT MAY BE USED AS APPROVED BY THE CITY.
12. THE CONTRACTOR SHALL NOTIFY THE CITY'S DESIGNATED INSPECTOR PRIOR TO ATTEMPTING TO CLEAR ANY RECLAIMED WATER MAIN FOR USE. THE INSPECTOR SHALL COORDINATE WITH CITY PERSONNEL AT THE RECLAIMED WATER PLANT 2 BUSINESS DAYS PRIOR TO BEGINNING ANY FULL- DIAMETER FLUSH OF MAINS. THE CONTRACTOR WILL CONDUCT A STANDARD WATER PRESSURE TEST, 150 PSI STATIC PRESSURE FOR A PERIOD OF

STANDARD CONSTRUCTION DETAIL
RECLAIMED WATER CONSTRUCTION NOTES

FILE NAME RW2.DOC
DETAIL REF: RW-2
REV. 12/08

RECLAIMED WATER CONSTRUCTION NOTES (CONT'D)

2 HOURS PER AWWA POTABLE WATER STANDARDS. THE RECLAIMED LINES WILL THEN BE DISINFECTED WITH CHLORINE, FLUSHED CLEAR AGAIN, WITH A MINIMUM OF 1 POSITIVE CHLORINE RESIDUAL TEST RESULT PROVIDED TO THE CITY.

13. THE CONTRACTOR SHALL BE REQUIRED TO PIG ALL RECLAIMED MAINS IN EXCESS OF 6" IN DIAMETER AND PRIMARY DISTRIBUTION MAINS LOCATED ON COLLECTOR AND ARTERIAL ROADWAYS. ALL PIGS SHALL BE NEW. NO FOAM PIGS ARE ALLOWED. LAUNCHING AND EXTRACTION POINTS SHALL BE DETERMINED BY THE CONTRACTOR. ALL PIGGING OPERATIONS SHALL BE WITNESSED BY A PUBLIC UTILITIES REPRESENTATIVE OR CITY UTILITY INSPECTOR.
14. ALL RECLAIMED WATER MAINS SHALL USE A THRUST RESTRAINED JOINT METHOD IN COMPLIANCE WITH THE DUCTILE IRON PIPE RESEARCH ASSOCIATION (DIPRA GUIDELINES IN THE EVENT THAT PVC FITTINGS ARE SPECIFIED, THE RESTRAINED JOINT SHALL BE MODIFIED IN ACCORDANCE WITH THE RECOMMENDED ADDITIONAL RESTRAINED LENGTH REQUIRED FOR PIPE WRAPPED WITH POLYETHYLENE. IN NO INSTANCE SHALL THRUST BLOCKS BE PERMITTED.
15. MEGALUGS, BOLTLESS RESTRAINED JOINTS, OR GRIPPER GASKETS SHALL BE USED ON ALL RESTRAINED JOINT INSTALLATIONS. MINIMUM DEPTH OF BURY ON PIPES NOT MEETING REQUIRED COVER REQUIREMENTS SHALL FOLLOW THE MOST RECENT DIPRA THRUST JOINT RESTRAINT DESIGN GUIDELINES.
16. UPON CONSTRUCTION COMPLETION AND ACCEPTANCE OF THE SYSTEM, IT SHALL BE THE DESIGN ENGINEER'S RESPONSIBILITY TO INSURE THAT THE SYSTEM IS PROPERLY CERTIFIED AND ACCEPTED BY THE CITY OF PORT ORANGE PUBLIC UTILITIES AND "AS-BUILTS" ARE PROVIDED TO THE CITY, PRIOR TO ANY USE OF THIS SYSTEM.
17. ALL RECLAIMED WATER MAINS AND SERVICE LINES SHALL BE READILY DISTINGUISHABLE BY THEIR PURPLE COLOR OR TAPE MARKINGS. DUCTILE IRON PIPE SHALL BE WRAPPED WITH PURPLE POLYETHYLENE.
18. ALL RECLAIMED WATER SERVICES SHALL BE MARKED ALONG THE OUTSIDE EDGE OF CURB WITH AN "_|_" OR BY METAL TABS SET INTO PAVEMENT. VALVES AND BLOW-OFFS FOR RECLAIMED WATER MAINS SHALL BE MARKED BY AN "X" SET INTO THE PAVEMENT. REVERSE TAPPING VALVE SHALL BE MARKED WITH AN "X ↑ " SAW CUT INTO THE CURB OR PAVEMENT WITH THE ARROW POINTING TO THE DIRECTION OF PRESSURE MAIN RUN.
19. RECLAIMED WATER SERVICES SHALL BE NORMALLY DOUBLE 1 1/2" SERVICES LOCATED AT SIDE LOT LINES ALTERNATING WITH POTABLE WATER SERVICE LOCATIONS. IN INSTANCES WHERE RECLAIM WATER SERVICES NEED TO BE OFFSET, 1" SINGLE SERVICES SHALL BE SPECIFIED THESE SERVICES MAY BE OFFSET FROM THE LOT LINE A MAXIMUM DISTANCE OF 2.0'.
20. MAXIMUM OBTAINABLE SEPARATION OF PUBLIC RECLAIMED WATER MAINS, STORMWATER MAINS, AND SANITARY SEWER MAINS SHALL BE MAINTAINED. A MINIMUM HORIZONTAL SEPARATION OF FIVE (5) FEET (CENTER TO CENTER) OR THREE (3) FEET (OUTSIDE TO OUTSIDE) SHALL BE MAINTAINED BETWEEN RECLAIMED WATER MAINS AND SEWAGE MAINS WHERE RECLAIMED WATER AND SANITARY SEWAGE MAINS CROSS WITH LESS THAN EIGHTEEN (18) INCHES VERTICAL CLEARANCE, THE SANITARY SEWAGE MAIN SHALL BE TWENTY (20) FEET OF EITHER CONCRETE ENCASED PVC PIPE OR ENCASED IN A WATERTIGHT CARRIER PIPE, CENTERED ON THE POINT OF CROSSING.
21. ALL TAPPING OF MAINS SHALL BE PERFORMED BY THE CITY AND BILLED IN ACCORDANCE WITH THE ADOPTED FEE RESOLUTION. SCHEDULING OF THESE CONNECTIONS SHALL REQUIRE A MINIMUM 2 BUSINESS DAYS NOTIFICATION (MEASURED ON NORMAL WORK DAYS) DIRECTED TO THE CITY'S DESIGNATED SITE INSPECTOR WHO SHALL COORDINATE THE WORK DIRECTLY WITH THE PUBLIC UTILITIES DEPARTMENT. SUBSEQUENTLY, THE CONNECTION SHALL BE SCHEDULED TO COMMENCE BETWEEN 7:00 A.M. AND NOON ON THE APPROPRIATE

STANDARD CONSTRUCTION DETAIL
RECLAIMED WATER CONSTRUCTION NOTES

FILE NAME RW2.DOC
DETAIL REF: RW-2
REV. 12/08

RECLAIMED WATER CONSTRUCTION NOTES (CONT'D)

DAY.

22. WITH RESPECT TO TIE-IN CONNECTIONS, THE CITY RESERVES THE RIGHT TO REQUIRE CONNECTIONS TO BE PERFORMED DURING PERIODS OF LOW FLOW IN ORDER TO MINIMIZE SERVICE DISRUPTION TO EXISTING CUSTOMERS.
23. ALL WORK PERFORMED UPON RECLAIMED WATER FACILITIES OWNED OR PROPOSED TO BE OWNED BY THE CITY SHALL BE CONSTRUCTED BY AN UNDERGROUND UTILITY OR GENERAL CONTRACTOR LICENSED IN THE STATE OF FLORIDA AND REGISTERED WITH THE CITY.
24. FOR CONSTRUCTION PURPOSES, THE PLANS SHALL DIMENSION THE PROPOSED LOCATIONS OF ALL RECLAIMED WATER MAINS MEASURED FROM THE BACK OF CURB (OR EDGE OF PAVEMENT IF NO CURB EXISTS).
25. ALL H.D.P.E. PIPE RECLAIMED WATER MAINS SHALL BE S.D.R.11 UNLESS SPECIFICALLY NOTED OTHERWISE. THE HDPE PIPE SHALL BE SIZED TO MATCH THE EXTERNAL DIAMETER OF THE PVC OR DIP PIPE TO WHICH IT IS ATTACHED.
26. ALL P.V.C. PIPE SHALL BE STORED IN SUCH A WAY AS TO PREVENT WARPING, DEFLECTION, OR ANY DEFORMATION.
27. RECLAIMED WATER HYDRANTS MAY BE REQUIRED BY THE CITY. ALL RECLAIMED HYDRANTS SHALL BE PAINTED PURPLE.
28. NO USED, RE-USED, RUSTED, SECOND HAND, OR ANY MATERIAL THAT IS NOT NEW SHALL BE USED IN ANY UTILITY IMPROVEMENT PROJECTS WITHIN THE CITIES SERVICE AREA.
29. IN AREAS WHERE RECLAIMED WATER IS AVAILABLE, RECLAIMED WATER WILL BE UTILIZED IN THE PRESSURE TESTING OF NEW RECLAIMED WATER LINES.
30. RECLAIMED WATER MAINS SHALL BE PVC AWWA CLASS C-900 OR C-905, CL 150 (COLOR PANTONE PURPLE) OR DIP PRESSURE CLASS 350, STANDARD CEMENT LINED UNLESS APPROVED OTHERWISE BY THE CITY.

STANDARD CONSTRUCTION DETAIL
RECLAIMED WATER CONSTRUCTION NOTES

FILE NAME RW2.DOC
DETAIL REF: RW-2
REV. 12/08

City of Port Orange Public Utilities Department
List of Approved Products

Reclaimed Water 12/08

Air Release Valves

MANUFACTURER	MODEL #
Val-Matic	Series 38

Gate Valves and Tapping Valves – Resilient Seated (AWWA C509 and C515) 24" or Smaller (Valve wedge to be complete enclosed with EPDM rubber)

MANUFACTURER	MODEL #
American AVK Co.	Series 3, 18, 25, 45, 55, & 66
Clow	Model 2638 and 2639
Mueller	A-2360, A-2361, T-2360 & T-2361
American Flow Control	Series 2500

Joints Restrained – DIP and PVC

MANUFACTURER	MODEL #
EBBA Iron Inc	Series 1100/1500/1600 2000/2500/2800
Star Pipe	Stargrip Series 1000/1100/1200/3000/ 4000
Sigma	One-Lock SLD & One-Lock SLC & PV-Lock for PVC
Smith-Blair	Cam-Lock (111 & 120) & Bell-Lock (115 & 165)

STANDARD CONSTRUCTION DETAIL
RECLAIMED WATER APPROVED PRODUCTS

FILE NAME RW3.DOC
DETAIL REF: RW-3

City of Port Orange Public Utilities Department
List of Approved Products

Reclaimed Water 12/08

Polyethylene Tubing – (Purple with UV Protection (SDR-9) 1" to 2" only)

MANUFACTURER	MODEL #
Endot Endocore RWT	Endotrace with #10 Copperhead tracer wire

Corporation Stop 1"

MANUFACTURER	MODEL #
Ford	F-1100-4

Corporation Stop 1 ½"

MANUFACTURER	MODEL #
Ford	FB-1100-6

Curb Stop – Straight Ball Meter Valve w/ Barrel Locks

MANUFACTURER	MODEL #
Ford	B-94-324W (Single Service) B-91-223W (Double Service)
Ford	BF 43-777W (For 2" meter)

"U" Branch (1 ½" x ¾")

MANUFACTURER	MODEL #
Ford	U-48-63-7.5

STANDARD CONSTRUCTION DETAIL
RECLAIMED WATER APPROVED PRODUCTS

FILE NAME RW3.DOC
DETAIL REF: RW-3

Dewberry

Dewberry Engineers Inc.
800 NORTH MAGNOLIA AVE
ORLANDO, FL 32803
SUITE 1000
PHONE: 407.843.5120
ENGINEERING BUSINESS -8794

WESTPORT RESERVE
(PHASE 2B)

PORT ORANGE, FL

SEAL

7/1/2016

No.	DATE	BY	Description

REVISIONS

DRAWN BY TFS
APPROVED BY DMV
CHECKED BY NPS
DATE JANUARY 2016
DATUM NAVD 88

TITLE

CITY RECLAIMED WATER DETAILS

PROJECT NO. 50079046 (CC 1)

C30

SHEET NO.

3:52:03 PM ...\CC1-SF PH1 CityReclaimDetails-01.dgn

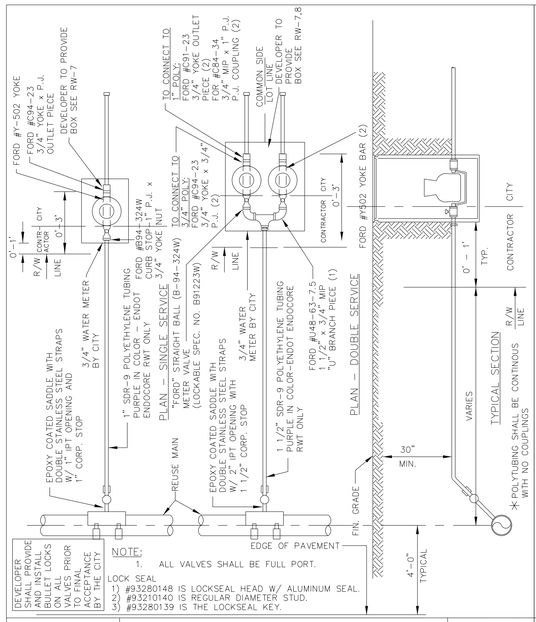

NOTE:

1. ALL VALVES SHALL BE FULL PORT.

LOCK SEAL

1) #93280148 IS LOCKSEAL HEAD W/ ALUMINUM SEAL.
2) #93210140 IS REGULAR DIAMETER STUD.
3) #93280139 IS THE LOCKSEAL KEY.

STANDARD CONSTRUCTION DETAIL
RECLAIMED WATER SERVICE:
IRRIGATION (SPRINKLER) CONNECTION
3/4" – 1" METER

REV. 12/08

FILE NAME: RW5.DWG
DETAIL REF: RW-5

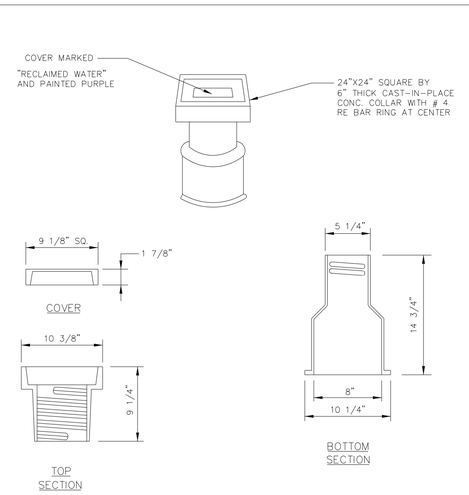

NOTE:

1. RECLAIMED MAIN VALVE BOX AND COVER SHALL BE ADJUSTABLE SCREW TYPE.
2. SEE W-4 FOR ADDITIONAL INFORMATION REGARDING PVC SLEEVE.

STANDARD CONSTRUCTION DETAIL
RECLAIMED WATER MAIN
VALVE BOX

REV. 12/08

FILE NAME: RW9.DWG
DETAIL REF: RW-9

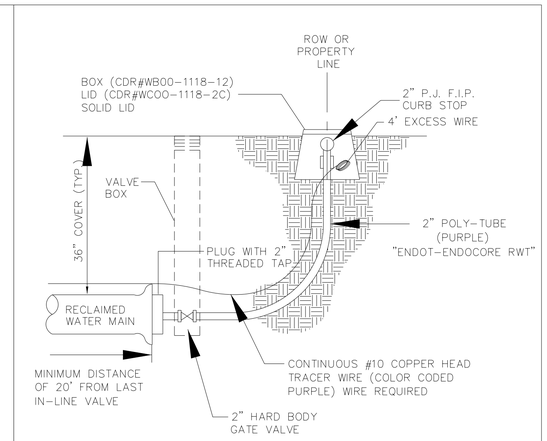

NOTE: BLOW-OFF BOXES FOR POTABLE AND RECLAIMED WATER WILL BE CDR#WB00-1118-12 (11"X18"X12") THE LID FOR BOTH POTABLE AND RECLAIMED WATER BLOW-OFF BOXES WILL BE CDR #WC00-1118-2C. THIS LID IS 11" X 18" AND HAS A CAST IRON READER LID. BOTH THE WATER AND THE RECLAIMED WATER BLOW-OFF BOX COMPONENTS SHALL BE NATURAL GREY IN COLOR

NOTE: PROVIDE AT LEAST ONE RESTRAINED JOINT IMMEDIATELY UPSTREAM OF BLOW-OFF AS PER LATEST DIPRA RESTRAINED JOINT CALCULATIONS.

STANDARD CONSTRUCTION DETAIL
RECLAIMED WATER BLOW OFF

REV. 12/08

FILE NAME: RW10.DWG
DETAIL REF: RW-10

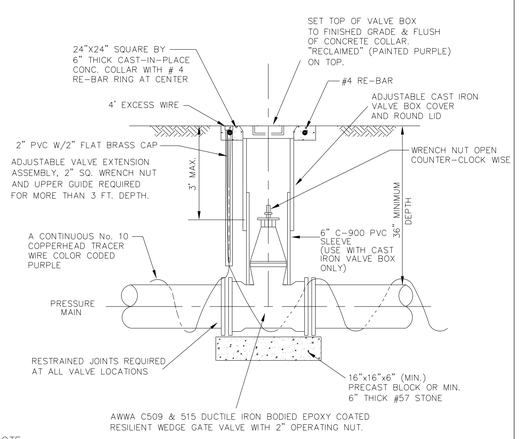

NOTE:

1. BOLT VALVES TO TEE OR CROSS WHEREVER AND WHENEVER APPLICABLE.
2. A CONTINUOUS TRACER WIRE TO BE COLOR CODED "PURPLE" FOR RECLAIMED WATER, LAYED ON TOP IN TRENCH
3. GATE VALVE WEDGE SHALL BE COMPLETELY ENCAPSULATED WITH EPDM RUBBER.
4. ALL EXTERIOR BOLTS, NUTS, WASHERS AND HARDWARE SHALL BE MINIMUM OF 316 STAINLESS STEEL GRADE.

STANDARD CONSTRUCTION DETAIL
RECLAIMED WATER
VALVE AND VALVE BOX
(4" – 16" VALVE SIZES)

REV. 12/08

FILE NAME: RW11.DWG
DETAIL REF: RW-11

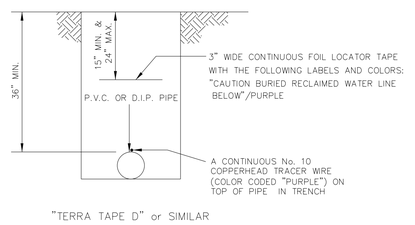

NOTE:

1) A CONTINUOUS No. 10 COPPERHEAD TRACER WIRE TO BE INSTALLED WITH ALL NON-METALLIC PIPE. WIRE SHALL BE BROUGHT UP TO GRADE AT ALL VALVES OUTSIDE P.V.C. SLEEVE, (SEE DETAIL W-6).

2) ALL TRACER WIRES SHALL BE INTERCONNECTED WITH WATER PROOF WIRE NUT CAP OR WITH SIMILAR WATER PROOF SPLICE KIT AT ANY SPLICE AND WHERE SERVICES CONNECT TO MAINS.

3) A SUCCESSFUL CONTINUITY TEST SHALL BE CONDUCTED AND WITNESSED BY A CITY INSPECTOR AT THE COMPLETION OF TRACER WIRE INSTALLATION.

STANDARD CONSTRUCTION DETAIL
LOCATOR TAPE/ TRACERWIRE INSTALLATION FOR
RECLAIMED WATER, PIPELINES

REV. 12/08

FILE NAME: RW12.DWG
DETAIL REF: RW-12

Dewberry

Dewberry Engineers Inc.
800 NORTH MAGNOLIA AVE
ORLANDO, FL 32803
SUITE 1000
PHONE: 407.843.5120
ENGINEERING BUSINESS -8794

WESTPORT RESERVE
(PHASE 2B)

PORT ORANGE, FL

SEAL

7/1/2016

No.	DATE	BY	Description

REVISIONS

DRAWN BY TFS
APPROVED BY DMV
CHECKED BY NPS
DATE JANUARY 2016
DATUM NAVD 88

TITLE

CITY RECLAIMED WATER DETAILS

PROJECT NO. 50079046 (CC 1)

C31

SHEET NO.

...\CC1-SF PH1 CityReclaimDetails-02.dgn
3:52:36 PM

PAVEMENT LEGEND

1. 12" SUBGRADE COMPACTED TO 98% DENSITY BASED ON AASHTO T-180 MODIFIED PROCTOR TEST WITH MINIMUM LBR 40.
2. 6" RECYCLED CONCRETE BASE (LBR 130) COMPACTED TO 98% DENSITY BASED ON AASHTO T-180 MODIFIED PROCTOR TEST. THE CONSTRUCTION METHODS SHALL CONFORM TO THE LATEST EDITION OF THE F.D.O.T. ROAD AND BRIDGE CONSTRUCTION SPECIFICATIONS.
3. 1.5" OF FLORIDA DOT ASPHALTIC CONCRETE MIX OF TYPE S-9.5 & COMPACTED TO 98% DENSITY. THE CONSTRUCTION METHODS SHALL CONFORM TO THE LATEST EDITION OF THE F.D.O.T. ROAD AND BRIDGE CONSTRUCTION SPECIFICATIONS.

ALTERNATE BASE:
6" SOIL CEMENT BASE MINIMUM BEARING STRENGTH OF 300 P.S.I. SHALL BE OBTAINED WITHIN 7 DAYS AND COMPACTED TO 98% DENSITY BASED ON AASHTO T-99 STANDARD PROCTOR TEST. CONSTRUCTION METHODS SHALL CONFORM TO SECTION 270 OF STANDARD F.D.O.T. SPECIFICATIONS FOR ROAD AND BRIDGE CONSTRUCTION, LATEST EDITION.

USE OF ALTERNATE BASE MUST FIRST BE APPROVED BY THE CITY ENGINEER

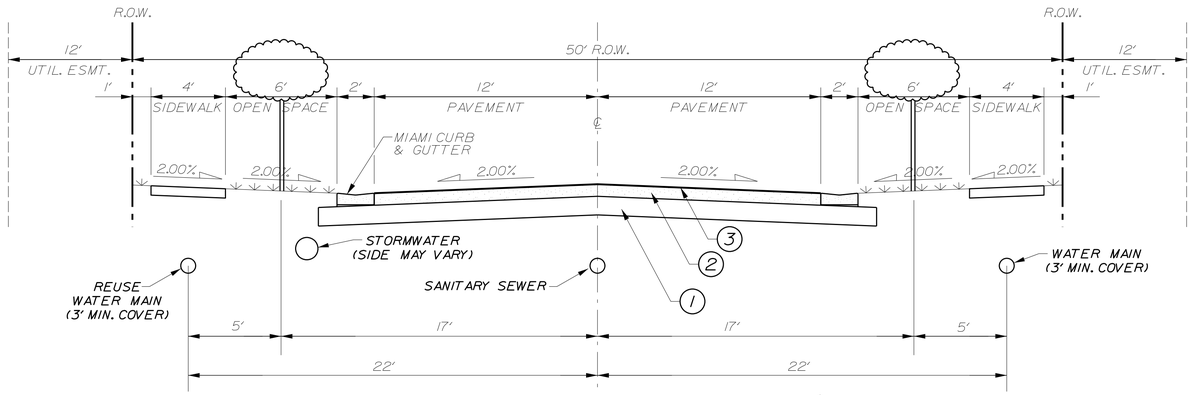

TYPICAL SECTION - 50' R.O.W. 2

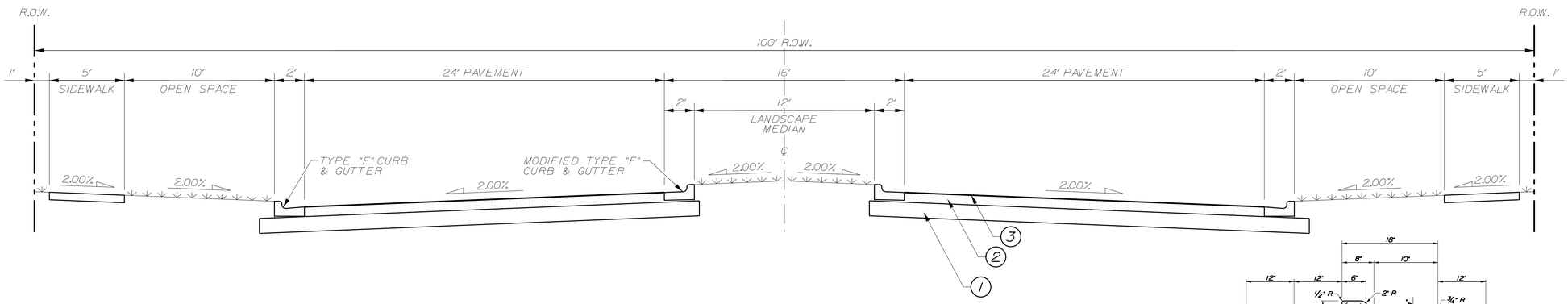

TYPICAL SECTION - 100' R.O.W.

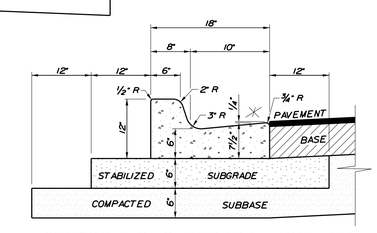

18" MODIFIED STANDARD TYPE "F" CURB & GUTTER DETAIL

✳NOTE
WHEN USED ON THE HIGH SIDE OF ROADWAYS, THE CROSS SLOPE OF THE GUTTER SHALL MATCH THE CROSS SLOPE OF THE ADJACENT PAVEMENT.

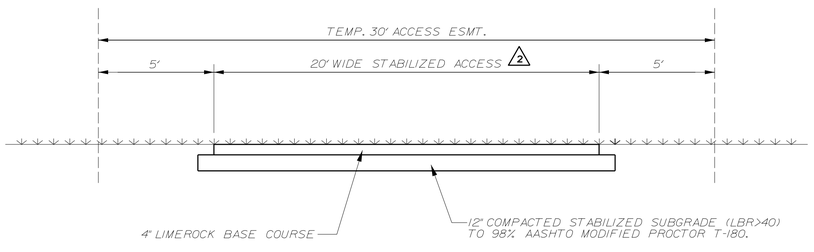

TEMPORARY EMERGENCY STABILIZED ACCESS 2

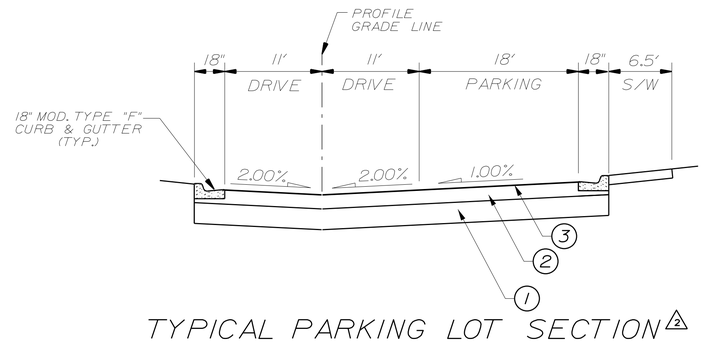

TYPICAL PARKING LOT SECTION 2

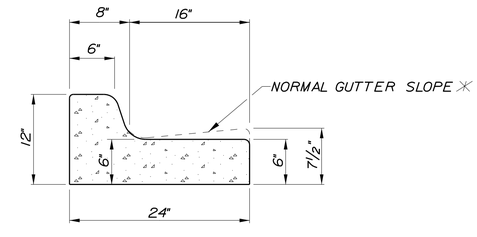

✳NOTE
WHEN USED ON THE HIGH SIDE OF ROADWAYS, THE CROSS SLOPE OF THE GUTTER SHALL MATCH THE CROSS SLOPE OF THE ADJACENT PAVEMENT.

MODIFIED STANDARD TYPE "F" CURB & GUTTER DETAIL

Dewberry

Dewberry Engineers Inc.
800 NORTH MAGNOLIA AVE
ORLANDO, FL 32803
SUITE 1000
PHONE: 407.843.5120
ENGINEERING BUSINESS -8794

WESTPORT RESERVE (PHASE 2B)

PORT ORANGE, FL

SEAL

7/1/2016

KEY PLAN

SCALE NORTH

No.	DATE	BY	Description
2	4-21-16	KJK	REV PER CITY COMMENTS

REVISIONS

DRAWN BY	TFS
APPROVED BY	DMV
CHECKED BY	NPS
DATE	JANUARY 2016
DATUM	NAVD 88

TITLE

TYPICAL PAVING SECTIONS

PROJECT NO. 50079046 (CC 1)

C32

SHEET NO.

3:52:38 PM ...\CCI-SF PH1 TypSections.dgn

CITY OF PORT ORANGE
MONTHLY DEVELOPMENT ACTIVITY REPORT

Walmart Neighborhood Market – 3811 Clyde Morris Blvd.

CITY COUNCIL
allen green, mayor
drew bastian, vice mayor
bob ford, councilman
donald burnette, councilman
scott stiltner, councilman
jake johansson, city manager

PLANNING COMMISSION
john junco, chairperson
lance green, vice chairperson
michael arminio, commissioner
frank crooks, commissioner
thomas jordan, commissioner
john junco, commissioner
maria mills-benat, commissioner
newton white, commissioner

UPDATE: JULY 8, 2016

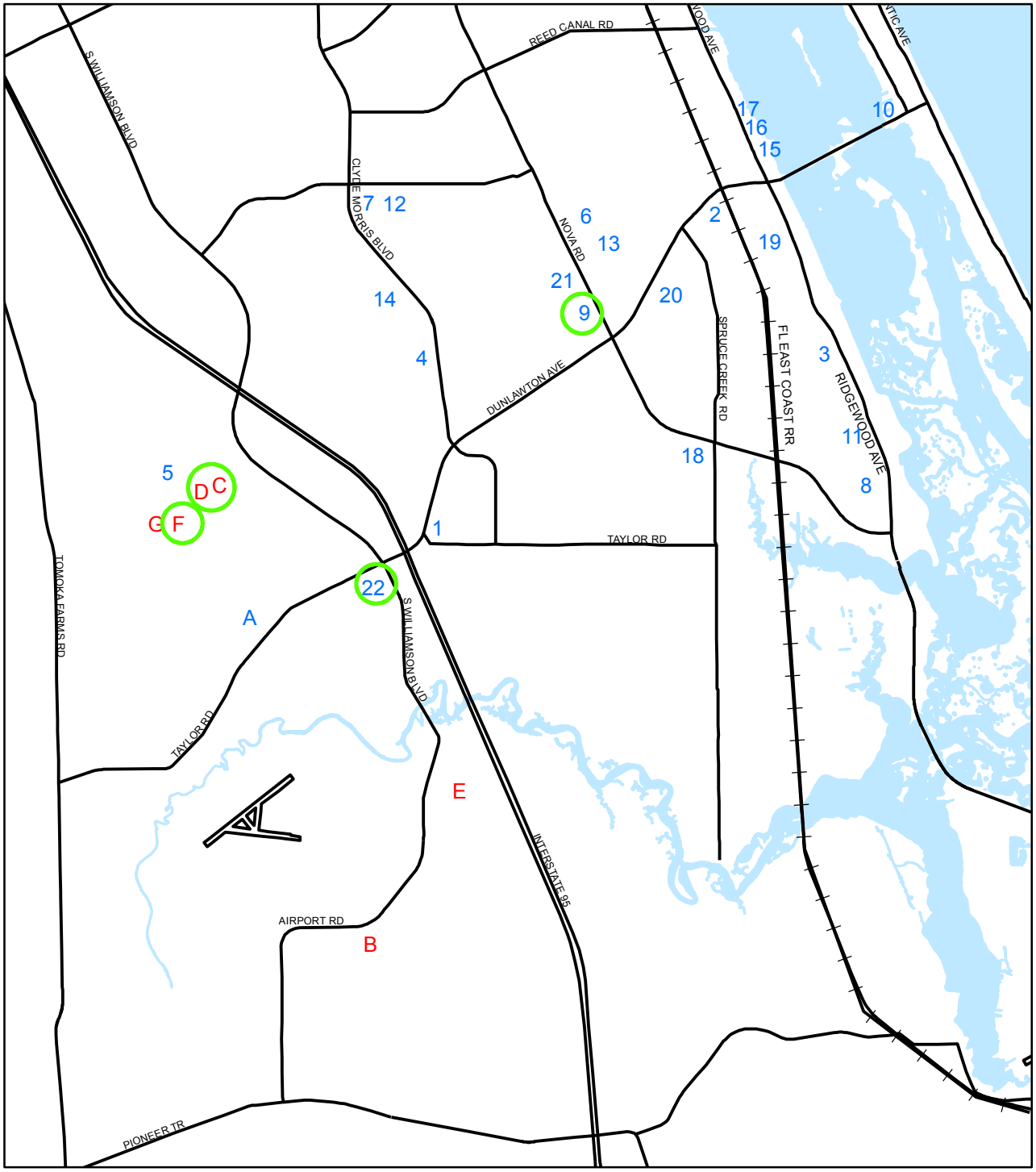

RESIDENTIAL AND NON-RESIDENTIAL DEVELOPMENT PROJECTS

UPDATE: JULY 8, 2016

Residential

A Crane Lakes Golf & Country Club
B Golf Homes at Cypress Head
C Hawks Preserve, Phase I
D Hawks Preserve, Phase II
E The Pinnacle PUD, Phase II
F The Sanctuary at Westport
G Westport Reserve, Phase 2B

Non-Residential

1 Altamira Shopping Village
2 Atlantic Marine
3 Auto Sales Lot
4 Badcock Furniture & More
5 Coraci Sports Park - Pop Warner Field
6 Cumberland Farms (Nova Road)
7 Cumberland Farms (Palmetto Pointe)
8 Faris Car Wash
9 The Half Wall
10 Hunter Building
11 Little C's Custom (fka Florida Truck Sales)
12 Palmetto Pointe Marketplace subdivision
Walmart Neighborhood Market grocery store
13 Port Hole Retail Center
14 Ravenwood Veterinary Hospital expansion
15 Riverwalk Marina & Riverboat PCD
16 Riverwalk Condominium & Point
Restaurant
17 Riverwalk Park, Phases 1A & 1B
18 Spruce Creek Center
19 Virginia Industrial Park
20 Vystar Credit Union
21 Waffle House - Nova Rd.
22 Waffle House - Taylor Rd.

New Project

Change In Status

RESIDENTIAL DEVELOPMENT PROJECTS

Update: July 8, 2016

= addition to the development activity report

= change of status to a particular project

MAP ID	Project	Location	Description	Under staff review	D. O. issued	Pre-con held	ABC completed	Const. Permit issued	Under construction	Final inspection	C.O. issued	Comments	Case No./ Planner
A	Crane Lakes Golf & Country Club / site plan modification	1780 Taylor Rd.	Construction of a second driveway into the site, additonal 8 mobile home lots, storage area for the golf course, pickle ball courts, and associated site improvements	X								Awaiting resubmittal	16-82000003 PGC
B	Golf Homes at Cypress Head / site plan	S. side of Airport Rd. between Cypress Head and Waters Edge	52 townhomes on ±6.62 acres	X	X							DO issued 4/18/16	15-80000009 GKP
C	Hawks Preserve, Phase I / subdivision (fka Port Orange Plantation, Phase IV A & B)	E. side of Coraci Blvd, N. of Town West Blvd.	123 single-family lots on ±57 acres	X	X	X	-	X	X			Under construction; DO modification issued 6/16/16	14-50000006 16-52000001 PGC
D	Hawks Preserve, Phase II / subdivision (fka Port Orange Plantation, Phase IV D & E)	E. side of Coraci Blvd, N. of Town West Blvd.	66 single-family lots on ±23 acres	X	X	X	-					Pre-con held 1/28/16; DO modification issued 6/16/16	14-50000007 16-52000002 PGC
E	The Pinnacle PUD – Phase II, D. O. Modification	E. side of Williamson Blvd. / W. of I-95, S. of Martin Dairy Rd.	64 single-family lots on ±29.72 acres	X	X							DO issued 11/06/15	15-52000001 PGC
E	The Pinnacle PUD – 1st Amendment to the MDA & CDP	E. side of Williamson Blvd. / W. of I-95, S. of Martin Dairy Rd.	Expand the boundary of the subdivision, increase total number of single-family lots to 150, modify stormwater retention area, and construction of a stabilized emergency access	X								Under review	16-40000004 PGC
F	The Sanctuary at Westport, Phase 2A / site plan	S. side of Town West Blvd., W. of Coraci Blvd., E. of Tomoka Farms Rd.	360 multi-family apartment units on 56.66 acres	X	X	X	X	X	X			Under construction	16-80000001 GKP
G	Westport Reserve, Phase 2B / subdivision	S. side of Town West Blvd., W. of Coraci Blvd., E. of Tomoka Farms Rd.	64 single-family lots on ±31.24 acres	X								Under review; Tentatively scheduled for PC 7/28/16	16-50000002 GKP

NON-RESIDENTIAL DEVELOPMENT PROJECTS

Update: July 8, 2016

= addition to the development activity report

= change of status to a particular project

MAP ID	Project		Location	Description	Status: Under staff review	D. O. issued	Pre-con meeting	ABC permit completed	Const. Permit issued	Under construction	Final inspection	C. O. issued	Comments	Case No./ Planner
1	Altamira Shopping Village	Commercial Subdivision Replat	1790 Dunlawton Ave.	5-lot commercial subdivision replat of +/- 27 acres	X								On hold	14-50000001 TPB
		Crosby Property / site plan	1736 Dunlawton Ave.	4,500 SF retail building on 1.24 acres with associated site improvements	X								On hold	14-80000014 TPB
2	Atlantic Marine / site plan		520 Dunlawton Ave. (619, 621, 627, & 631 Lemon St. 630 & 632 Ruth St.)	16,910 SF building for boat sales and boat repair and areas for outdoor boat storage for Atlantic Marine along with associated site and off-site improvements	X	X	X	X	X	X			Under construction	14-80000006 BP #16-0813 TPB
3	Auto Sales Lot / redevelopment		5164 Ridgewood Ave.	800 SF auto sales building with associated site improvements on 0.76 acres	X								Awaiting resubmittal	16-80000008 GKP
4	Badcock Furniture & More / site plan		4610 Clyde Morris Blvd.	18,000 SF retail building along with associated site improvements on 1.37 acres	X								1st resubmittal under review	16-80000006 PGC
5	Coraci Sports Park, Pop Warner field / site plan modification		5200 Coraci Blvd.	Modifications to an existing football field including the construction of permanent grandstands with press box, storage facilities, restrooms, shelter pavilions, and associated site improvements	X	X	X	X	X	X			Under construction	15-82000002 BP #15-2549 GKP
6	Cumberland Farms (Nova Rd./Herbert St.) (Fka Booth's Bowery) / site plan		3657 Nova Rd.	Demolition of a 15,000 SF building (Booth's Bowery) and construction of a 5,000 convenience store and 10 fueling dispensers and associated site improvements on 1.35 acres	X								Awaiting 1st resubmittal	16-80000004 GKP
7	Cumberland Farms (Palmetto Pointe) / site plan		3803 Clyde Morris Blvd.	4,952 SF convenience store with 8 fueling dispensers and associated site improvements on 1.44 acres	X								Awaiting 2nd resubmittal	16-80000002 BP #16-2288 GKP
8	Faris Car Wash / redevelopment		5476 Ridgewood Ave.	3,000 SF 4-bay car wash building and associated site improvements on 0.95 acres	X								SDRC held 6/01/16	16-80000007 GKP
9	The Half Wall / new construction		3770 Nova Rd.	7,090 SF stand-alone restaurant with associated site improvements on 0.78 acres	X	X	X	X	X	X	X	X	Complete	15-80000004 BP #15-1834 GKP

NON-RESIDENTIAL DEVELOPMENT PROJECTS

Update: July 8, 2016

= addition to the development activity report

= change of status to a particular project

MAP ID	Project		Location	Description	Under staff review	D. O. issued	Pre-con meeting	ABC permit completed	Const. Permit issued	Under construction	Final inspection	C. O. issued	Comments	Case No./ Planner
10	Hunter Building / redevelopment		59 Dunlawton Ave.	Redevelopment of a 0.57 acre property including a 5,132 SF warehouse building and associated site improvements	X								Awaiting resubmittal	16-80000005 BP #16-2573 PGC
11	Little C's Custom (fka Florida Truck Sales) / redevelopment		5536 Ridgewood Ave.	Redevelopment of a 0.68 acre commercial property into a car/truck sales lot with associated site improvements	X	X	X	X	X	X			Under construction	15-80000006 PGC
12	Palmetto Pointe Marketplace subdivision and Walmart Neighborhood Market grocery store / new construction	Subdivision Plat & Plans	Southeast corner of Clyde Morris Blvd. & Madeline Ave.	Subdivision of ±17.7 acres into 6 lots and 5 tracts	X	X	X	X	X	X			Under construction	14-50000003 TPB
		Site Plan	3811 Clyde Morris Blvd.	42,000 square foot grocery store and 9,600 square foot commercial multi-tenant building with associated site and off-site improvements on 17.7 acres	X	X	X	X	X	X			Under construction	14-80000007 BP #15-4343 TPB
13	The Port Hole Retail Center		930 Herbert St.	Redevelopment of an existing 5,562 SF bar/retail store with associated site improvements on 0.50 acres	X	X							DO issued 5/26/16	15-80000010 GKP
14	Ravenwood Veterinary Hospital Expansion / site plan		4542 Clyde Morris Blvd.	Demolition of existing Continental Fitness building and expansion of the veterinary hospital to include an 8,500 SF fenced dog run area, parking, and associated site improvements	X	X							DO issued 6/03/16	16-82000001 GKP
15	Riverwalk Marina and Riverboat PCD	Restatement of MDA & CDP	East and West sides of Halifax Dr. between Ocean Ave. and Herbert St.	Restatement of the MDA & CDP to state the framework for development of 2 residential condominium buildings, a restaurant on the point, 58-slip marina, linear park with 20-foot wide path, multi-purpose dock building, off-site signage along Dunlawton and Ridgewood and associated site improvements	X								Tentatively scheduled for CC 8/11/16	16-40000003 TPB
16	Riverwalk Condominium & Point Restaurant	Subdivision Replat	East and West sides of Halifax Dr. between Ocean Ave. and Herbert St.	Replat of subject property as an 8-lot subdivision	X								Tentatively scheduled for CC 8/11/16	16-50000001 TPB
		Site plan		Development of 2 residential condominium buildings, a restaurant on the point, 58-slip marina, linear park with 20-foot wide path, multi-purpose dock building, off-site signage along Dunlawton and Ridgewood and associated site improvements	X								2nd resubmittal pending CC approval of restatement of MDA/CDP and replat	16-80000003 TPB
17	Riverwalk Park / new construction	Phase 1B	3459 Ridgewood Ave.	Playground, splash park, picnic facilities, pavilions, shade structures, additional restrooms, concession building, portion of the boardwalk, event lawn, parking, and the southern portion of the 12' wide trailway, along with associated site improvements	X	X							Bid award tentatively scheduled for 8/02/16 CC meeting	15-80000005 PGC

NON-RESIDENTIAL DEVELOPMENT PROJECTS

Update: July 8, 2016

= addition to the development activity report

= change of status to a particular project

MAP ID	Project	Location	Description	Status: Under staff review	D. O. issued	Pre-con meeting	ABC permit completed	Const. Permit issued	Under construction	Final inspection	C. O. issued	Comments	Case No./ Planner
18	Spruce Creek Center / site plan modification	4020 Nova Rd.	Modifications to a parking lot for an existing shopping center with associated site improvements on 3.99 acres	X	X	X	X	X	X			Awaiting request for final inspection	14-82000008 GKP
19	Virginia Industrial Park / new construction	515 Virginia Ave.	5 building office/warehouse complex with associated site improvements	X	X	X	X	X	X			Building permits issued for 531 & 535 Virginia Ave.	01-80000019 TPB
20	Vystar Credit Union / new construction	750 Dunlawton Ave	4,000 SF bank with 5 drive-thru lanes on 2.5 acres with associated on-site and off-site improvements	X	X	X	X	X	X			Under construction	14-80000010 15-82000003 16-82000002 BP #16-0370 GKP
21	Waffle House Nova Rd. / new construction	3740 Nova Rd.	1,875 SF restaurant with associated site improvements on 0.80 acres	X	X							Awaiting request for pre-construction meeting	15-80000007 BP #15-2908 GKP
22	Waffle House Taylor Rd. / new construction	1633 A Taylor Rd.	1,875 SF restaurant with associated site improvements on 0.92 acres	X	X	X	X	X	X			Under construction	15-80000008 BP #15-2907 GKP

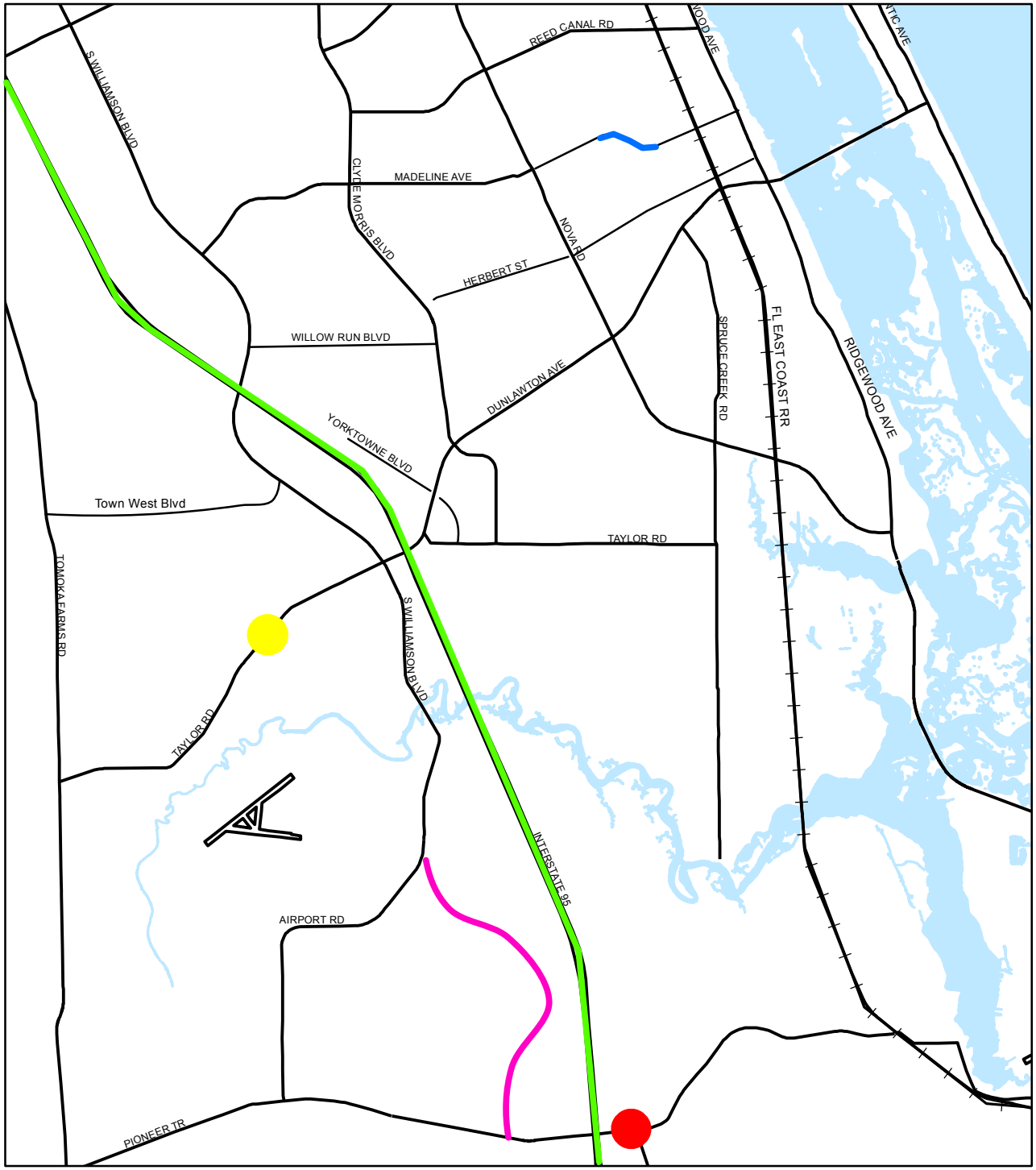

ROADWAY DEVELOPMENT PROJECTS

UPDATE: JULY 8, 2016

- Crane Lakes Traffic Signal
- I-95 Widening
- McDonald Road Sidewalk
- Pioneer Trail at Turnbull Bay Road
- S. Williamson Blvd. Extension

ROADWAY DEVELOPMENT PROJECTS REPORT **Update: July 8, 2016**

Project	Description	Jurisdiction	Status
Crane Lakes Traffic Signal	Installation of a new traffic signal at the intersection of Crane Lakes Blvd. and Taylor Rd.	Volusia County/City	Operational; Final close-out documents in progress
I-95 Widening	Construction to widen I-95 from SR44 to I-4/SR400 from 4 lanes to 6 lanes	FDOT	Under construction / 43% Complete
McDonald Road Sidewalk	Construct an 5'-wide sidewalk on the south side of Madeline Ave., the west side of McDonald Rd., and the south side of Charles St. from Sugar House Dr. to 6th St.	City/TPO	60% Design Plans complete
Pioneer Trail at Turnbull Bay Road	Intersection improvement	Volusia County/TPO	Under construction / Est. completion 09/2016
S. Willamson Blvd. Extension	Extension of Williamson Blvd. as a 4-lane divided roadway from Airport Rd. to Pioneer Trail	Developer/ Volusia County	Under construction / Est. completion 12/2016