REGULAR CITY COUNCIL MEETING

6:30 PM – COUNCIL CHAMBERS – CITY HALL

AUGUST 19, 2025

AGENDA

ALL CITIZENS DESIRING TO ADDRESS THE PORT ORANGE CITY COUNCIL DURING PUBLIC PARTICIPATION SHOULD COMPLETE THE SPEAKER CARD WHICH IS LOCATED ON THE STANDS OUTSIDE COUNCIL CHAMBERS. AFTER COMPLETING THE SPEAKER CARD, PRESENT IT TO THE CLERK.

A. OPENING

1. Invocation by Reverand Melissa Frantz of Daytona Beach Drive-in Christian Church
2. Pledge of Allegiance
3. Roll Call
4. Public Comments on Consent Agenda Items Only

B. CONSENT AGENDA

5. Approval of Minutes
    a. August 5, 2025 - Regular City Council Meeting
6. Bid Awards and Contract Items
    a. Approval of Task Authorization No. 14 with Pegasus Engineering, LLC for Post-Award Grant Management Services for the FEMA Hurricane Idalia Hazard Mitigation Grant Program (HMGP)
    b. Award of ITB #25-13 to Masci General Contractor, Inc. for Construction of the St. John's River to Sea (SJR2C) Loop Shared-Use Nonmotorized (SUN) Trail (FDOT #439865)
    c. Approval of Change Order No. 1 to Task Authorization No. 4 with Zev Cohen and Associates, Inc for the City Center Ballfield Rehabilitation
    d. Approval of Task Authorization No. 11 with Mead & Hunt for Wellfield Consumptive Use Permit (CUP) and Reclaimed Lakes Monitoring
7. Approval of a Memorandum of Understanding (MOU) with the International Union of Police Associations (IUPA)
8. Resolution No. 25-38 - Approval of Grant Subcontract in the amount of $17,521.87 from University of North Florida Training and Services, Institute Inc., d/b/a Institute of

Police Technology and Management for Florida's Bicycle Pedestrian Focused Initiative: Communication and High Visibility and Enforcement Project

9. Resolution No. 25-39 - Approval of Contract #H1201 Project #4734-002-R Hurricane Idalia Hazard Mitigation Grant Program (HMGP) to Acquire and Demolish 3 Homes

C. PUBLIC PARTICIPATION (Non-Agenda – 20 minutes)

D. COMMENTS AND ADDITIONAL ITEMS

10. Council Members
11. City Attorney
12. City Manager

E. SPECIAL REPORTS

13. Presentation of Vulnerability Assessment

F. BOARD APPOINTMENTS, INTERVIEWS, AND REPORTS

14. Citizen Advisory Committee for TPO

G. PUBLIC HEARING

15. First Reading - Ordinance No. 2025-20 - Administrative Rezoning/Various Locations East of Nova Road
16. First Reading - Ordinance No. 2025-21- Code of Ordinances Amendment/Chapter 82 - Waterways - Installation of Private Aids to Navigation (PATONs)
17. Administrative Amendments to the Land Development Code (LDC)
    a. First Reading - Ordinance No. 2025-22- Land Development Code (LDC) Amendment/Chapter 12 Roads and Vehicular Use Areas - Parking Space Width
    b. First Reading - Ordinance No. 2025-23 - Land Development Code (LDC) Amendment/ Chapter 3 Administration and Chapter 5 Subdivisions – Approval Process for a Subdivision Plat or Replat According to Senate Bill 784
    c. First Reading - Ordinance No. 2025-24 - Land Development Code (LDC) Amendment/Chapter 15 Signs - Electronic Message Center Minimum Message Displayed Time
    d. First Reading - Ordinance No. 2025-25 - Land Development Code (LDC) Amendment/Chapter 16 – Miscellaneous Regulations – Setbacks for an Elevated Wood Deck

H. REGULAR AGENDA

18. Fund Balance Policy Discussion

I. COUNCIL COMMITTEE REPORTS

19. City Council Committee Reports
    a. First Step Shelter - Councilman Shawn Goepfert
    b. Port Orange/South Daytona Chamber of Commerce - Councilman Shawn Goepfert

J. ADJOURNMENT

NOTICES – PURSUANT TO SECTION 286.0105 OF THE FLORIDA STATUTES, IF ANY PERSON DECIDES TO APPEAL ANY DECISION MADE BY THE CITY COUNCIL WITH RESPECT TO ANY MATTER CONSIDERED AT THIS PUBLIC MEETING OR HEARING, SUCH PERSON WILL NEED A RECORD OF THE PROCEEDINGS, AND THAT, FOR SUCH PURPOSE, SUCH PERSON MAY NEED TO ENSURE THAT A VERBATIM RECORD OF THE PROCEEDINGS IS MADE, WHICH RECORD INCLUDES THE TESTIMONY AND EVIDENCE UPON WHICH THE APPEAL IS TO BE BASED. THE CITY DOES NOT PREPARE OR PROVIDE SUCH A RECORD.

FOR SPECIAL ACCOMMODATIONS, PLEASE NOTIFY THE CITY CLERK'S OFFICE (PHONE: 386-506-5563) AS FAR IN ADVANCE AS POSSIBLE, BUT PREFERABLY WITHIN 2 WORKING DAYS OF YOUR RECEIPT OF THIS NOTICE OR 5 DAYS PRIOR TO THE MEETING OR HEARING DATE.

HELP FOR THE HEARING IMPAIRED IS AVAILABLE THROUGH THE ASSISTIVE LISTENING SYSTEM RECEIVERS CAN BE OBTAINED FROM THE CITY CLERKS' OFFICE.

IN ACCORDANCE WITH THE AMERICANS WITH DISABILITIES ACT (ADA), IF YOU ARE A PERSON WITH A DISABILITY WHO NEEDS AN ACCOMMODATION IN ORDER TO PARTICIPATE IN THIS PROCEEDING, YOU ARE ENTITLED, AT NO COST TO YOU, THE PROVISION OF CERTAIN ASSISTANCE. PLEASE CONTACT THE CITY CLERK FOR THE CITY OF PORT ORANGE, 1000 CITY CENTER CIRCLE, PORT ORANGE, FLORIDA 32129, TELEPHONE NUMBER 386-506-5563, CITYCLERK@PORT-ORANGE.ORG, AS FAR IN ADVANCE AS POSSIBLE, BUT PREFERABLY WITHIN 2 WORKING DAYS OF YOUR RECEIPT OF THIS NOTICE OR 5 DAYS PRIOR TO THE MEETING OR HEARING DATE. IF YOU ARE HEARING OR VOICE IMPAIRED, CONTACT THE RELAY OPERATOR AT 7-1-1 or 1-800-955-8771.

UPON REQUEST BY A QUALIFIED INDIVIDUAL WITH A DISABILITY, THIS DOCUMENT WILL BE MADE AVAILABLE IN AN ALTERNATE FORMAT. IF YOU NEED TO REQUEST THIS DOCUMENT IN AN ALTERNATE FORMAT, PLEASE CONTACT THE CITY CLERK WHOSE CONTACT INFORMATION IS PROVIDED ABOVE.

ANY INVOCATION THAT IS OFFERED BEFORE THE OFFICIAL START OF THE CITY COUNCIL MEETING SHALL BE THE VOLUNTARY OFFERING OF A PRIVATE PERSON, TO AND FOR THE BENEFIT OF THE CITY COUNCIL. THE VIEWS OR BELIEFS EXPRESSED BY THE INVOCATION SPEAKER HAVE NOT BEEN PREVIOUSLY REVIEWED OR APPROVED BY THE CITY COUNCIL OR THE CITY STAFF, AND THE CITY IS NOT ALLOWED BY LAW TO ENDORSE THE RELIGIOUS BELIEFS OR VIEWS OF THIS, OR ANY OTHER SPEAKER. PERSONS IN ATTENDANCE AT THE CITY COUNCIL MEETING ARE INVITED TO STAND DURING THE OPENING INVOCATION AND PLEDGE OF ALLEGIANCE. HOWEVER, SUCH INVITATION SHALL NOT BE CONSTRUED AS A DEMAND, ORDER, OR ANY OTHER TYPE OF COMMAND. NO PERSON IN ATTENDANCE AT THE MEETING SHALL BE REQUIRED TO PARTICIPATE IN ANY OPENING INVOCATION THAT IS OFFERED. A PERSON MAY EXIT THE CITY COUNCIL CHAMBERS AND RETURN UPON COMPLETION OF THE OPENING INVOCATION IF A PERSON DOES NOT WISH TO PARTICIPATE IN OR WITNESS THE OPENING INVOCATION.

REGULAR CITY COUNCIL MEETING MINUTES
COUNCIL CHAMBERS – CITY HALL
1000 CITY CENTER CIRCLE
PORT ORANGE, FLORIDA
AUGUST 5, 2025

THE REGULAR CITY COUNCIL MEETING of the City of Port Orange was called to order by Mayor Scott Stiltner at 6:30 p.m.

OPENING

Silent Invocation

Pledge of Allegiance

Roll Call	Present:	Councilman Shawn Goepfert Councilman Lance Green Vice Mayor Tracy Grubbs Mayor Scott Stiltner
	Absent	Councilman Jonathan Foley (excused)
	Also Present:	City Manager Wayne Clark City Attorney Matthew Jones Deputy City Clerk Amanda Bonin

4. Legislative Update - House Representative Chase Tramont

House Representative Chase Tramont gave a legislative update, discussing property taxes and answering Council questions. Mayor Stiltner requested a model showing potential outcomes of cutting property taxes with alternative funding options and suggested making this model available to all municipalities for analysis. Council members voiced concerns about replacing lost revenue. House Representative Tramont praised staff efforts on appropriations and noted the next application period opens August 18, 2025. Mayor Stiltner thanked him for his support.

5. Public Comments on Consent Agenda Items Only

There were none.

CONSENT AGENDA

6. Approval of Minutes
    a. July 15, 2025 - Regular City Council Meeting
7. Approval of Interlocal Agreement with the County of Volusia for Traffic Signal Maintenance
8. Resolution No. 25-36 - Approval of HUD CDBG Plan Year 2025 Annual Action Plan

9. Resolution No. 25-37 - Approval of Grant Agreement No. QG023 with Florida Department of Environmental Protection for the Harbor Road Spruce Creek/Rose Bay Septic to Sewer Project

> Motion to approve the Consent Agenda as presented was made by Councilman Shawn Goepfert and Seconded by Vice Mayor Tracy Grubbs. Motion carried unanimously by roll call vote.

City Council recessed at 6:53 p.m. to hold the Port Orange Town Center CRA and Eastport Business Center CRA meetings, minutes of which are under separate cover.

EASTPORT CRA REGULAR MEETING

TOWN CENTER CRA REGULAR MEETING

Council reconvened at 7:03 p.m. to hold the regular City Council meeting.

PUBLIC PARTICIPATION (Non-Agenda – 20 minutes)

Patricia Miles, resident, requested Council support in repealing SB180, expressing concern that the bill undermines home rule and explaining her reasons for the request.

COMMENTS AND ADDITIONAL ITEMS

10. Council Members

Vice Mayor Tracy Grubbs announced the upcoming Parks and Recreation “Rock the Park” event on August 30, 2025, and noted that the City is currently hiring.

Councilman Green highlighted Resolution No. 25-37 as a good-faith effort to support environmental improvements.

Councilman Shawn Goepfert spoke on Resolution No. 25-36, explaining it involves HUD funding for sidewalk repairs and emphasized the need for extended sidewalks and crosswalks on Summer Trees Road to improve pedestrian safety.

> Motion to authorize City staff to extend the Summer Trees sidewalk at Magnolia Loop was made by Councilman Shawn Goepfert.

Mayor Stiltner requested to bring this back as an agenda item to give council and staff the ability to view it and discuss it.

> Motion to revise the motion on the floor to add this item to an agenda for further discussion was made by Councilman Shawn Goepfert and Seconded by Vice Mayor Tracy Grubbs.

Mayor Stiltner announced the opening of Aldi on Williamson Boulevard, thanked Community Development staff for their work, and noted the soft opening of Farm Social, calling it a welcomed addition. He also raised the idea of exploring the cost-effectiveness of having an in-house electrician and requested a discussion at the next workshop on the permitting process, including permit requirements, costs, and necessity.

11. City Attorney

There was nothing further.

12. City Manager

City Manager Wayne Clark invited Community Development Director Tim Burman to provide an update on the Hurricane Milton recovery programs. Mr. Burman discussed the Transform 386 program, which offers approximately $40 million in funding for Volusia County residents affected by Hurricanes Ian or Milton. The funds can be used for home rehabilitation, reconstruction, reimbursement for completed repairs, or participation in a voluntary buy-out program. Staff is also looking at FEMA grants, which prioritize low-income households, seniors, and families with young children.

Mr. Clark noted he will return with information on reaching potential millage rates of 5.0000 and 4.975.

Councilman Goepfert raised concerns about sidewalk lighting west of I-95 on Dunlawton Avenue, estimating a replacement cost of around $115,000.

> Motion to add an item on the agenda for sidewalk lighting on Dunlawton, West of I-95, was made by Councilman Shawn Goepfert and Seconded by Lance Green.

Mayor Stiltner emphasized reviewing all reserve funding and prioritizing projects holistically.

Mr. Clark explained that lighting infrastructure varies by location along Dunlawton and outlined a plan to work with FDOT. The TPO (the regional transportation group) is looking at conducting a feasibility study from Spruce Creek Road to Taylor Branch Road to determine if maintenance/repair is feasible and what the best approach would be. City staff will bring a more pragmatic approach to Council that is sustainable over the long term and still provides light and keeps people safe.

Councilman Goepfert withdrew his motion, and Councilman Green withdrew his second.

Councilman Goepfert also voiced concerns about millage rates and project funding. Mayor Stiltner requested a policy discussion on the City's reserve position be added to the next agenda.

BOARD APPOINTMENTS, INTERVIEWS, AND REPORTS

13. Environmental Advisory Board Report

Kristine Cunningham, Chair of the Environmental Board, provided an update from their quarterly meeting, highlighting three projects. The "Adopt-a-Storm Drain" program has been approved and funded, with a rollout planned for the fall. A plant giveaway is scheduled for October 11, during the Port Orange Family Days event. Additionally, the board is launching a pilot program to plant trees around local ponds.

PUBLIC HEARING

14. Second Reading - Ordinance No. 2025-17- Land Development Code (LDC) Amendment/Chapter 16 - Relating to Home-Based Businesses

City Attorney Matt Jones read Ordinance No. 2025-17 into the record.

ORDINANCE NO. 2025-17

AN ORDINANCE OF THE CITY OF PORT ORANGE, VOLUSIA COUNTY, FLORIDA AMENDING THE LAND DEVELOPMENT CODE CHAPTER 16 RELATING TO LOCAL GOVERNMENT REGULATION OF HOME-BASED BUSINESSES TO ENSURE CONSISTENCY AND COMPLIANCE WITH RECENTLY ADOPTED STATE LEGISLATION AMENDING SECTION 559.955, FLORIDA STATUTES LIMITING LOCAL GOVERNMENT REGULATION OF HOME-BASED BUSINESSES; PROVIDING FOR REPEAL OF CONFLICTING ORDINANCES; PROVIDING FOR SEVERABILITY; AND PROVIDING AN EFFECTIVE DATE.

Motion to approve Ordinance No. 2025-17 was made by Councilman Lance Green and Seconded by Councilman Shawn Goepfert. Motion carried unanimously by roll call vote.

15. Second Reading - Ordinance No. 2025-18 - Land Development Code (LDC) Amendment/Chapter 20 Relating to Eligibility for Economic Development Incentives

Attorney Jones read Ordinance No. 2025-18 into the record.

ORDINANCE NO. 2025-18

AN ORDINANCE OF THE CITY OF PORT ORANGE, VOLUSIA COUNTY, FLORIDA AMENDING THE LAND DEVELOPMENT CODE CHAPTER 20 RELATING TO ADDITIONAL INCENTIVES RELATED TO PERMIT FEES AND MITIGATION FOR WETLANDS, TREES, AND GOPHER TORTOISES FOR TARGETED BUSINESSES; PROVIDING FOR REPEAL OF CONFLICTING ORDINANCES; PROVIDING FOR SEVERABILITY; AND PROVIDING AN EFFECTIVE DATE.

Motion to approve Ordinance No. 2025-18 was made by Councilman Lance Green and Seconded by Vice Mayor Tracy Grubbs. Motion carried unanimously by roll call vote.

COUNCIL COMMITTEE REPORTS

16. City Council Committee Reports
    a. Police Pension Board - Councilman Lance Green

Councilman Green provided a report on the Police Pension Board.

ADJOURNMENT - 7:52 p.m.

_____
Mayor Scott Stiltner

Attest:

_____
Robin Fenwick, MMC
City Clerk

CITY COUNCIL AGENDA ITEM

COUNCIL MEETING DATE 8/19/2025

SUBJECT: (B6a) Approval of Task Authorization No. 14 with Pegasus Engineering, LLC for Post-Award Grant Management Services for the FEMA Hurricane Idalia Hazard Mitigation Grant Program (HMGP)

DEPARTMENT: Community Development

GOAL: 1 - Public Safety 2 - Infrastructure

RECOMMENDED MOTION: Move to approve Task Authorization No. 14 with Pegasus Engineering, LLC for an amount not to exceed $36,500, and authorize the Mayor and City Clerk to execute the associated documents.

SUMMARY: Pegasus Engineering, LLC (Pegasus) currently has a contract with the City to assist with the preparation, submission, and post-award management of FEMA grants. Staff is requesting Pegasus's services for post-award grant management of the Hurricane Idalia HMGP Grant (also on this agenda), which is for the acquisition and demolition of three flood-prone homes.

Services provided under this Task Authorization include, but are not limited to:
- Coordination with the City regarding compliance with the Federal procurement standards as professional services needed for the implementation of the project are secured,
- Coordination with the City, homeowners, demolition contractor, closing agency, and others,
- Prepare and submit Quarterly Reports and Reimbursement Requests to FDEM,
- Coordinate with City staff regarding paid invoices, cancelled checks and supporting financial documentation.
- Collect the Final Deliverables, perform a technical review of the documentation and prepare a final deliverables package for submittal to FDEM.

Task Authorization No. 14 is contingent upon approval of the Hurricane Idalia HMGP Grant Agreement (No.H1201) between the Florida Division of Emergency Management (FDEM), who manages the HGMP grants, and the City of Port Orange for the acquisition and demolition of three flood-prone homes (also on this agenda). The task authorization, not to exceed $36,500, will cover the post-award grant management services by Pegasus. These services are eligible for 100% federal reimbursement through FEMA's Sub-Recipient Management Cost allocation.

PRESENTER: Tim Burman

ATTACHMENTS:

1.	Pegasus Engineering LLC RFSQ 23-11 Task Authorization No. 14 Application for Demolition of 3 Flood-Prone Homes	Pegasus Engineering LLC RFSQ 23-11 Task Authorization No. 14 Application for Demolition of 3 Flood-Prone Homes.pdf
2.	4734-002-R Acquisition Demolition of 3 FP Homes Grant Management Svcs (05-12-25)	4734-002-R Acquisition Demolition of 3 FP Homes Grant Management Svcs (05-12-25).pdf
3.	HMGP Idalia Acquisitions Maps	HMGP Idalia Acquisitions Maps.pdf

Valerie Duhl	Created/Initiated - 07/30/2025
Tim Burman	Approved - 08/01/2025
Linda Truitt	Approved - 08/04/2025
Shannon Balmer	Approved - 08/08/2025
Wayne Clark	Final Approval - 08/08/2025

TASK AUTHORIZATION NO. 14
Contract for Services dated May 16, 2023
Between the City of Port Orange, Florida and Pegasus Engineering, LLC

THIS Task Authorization is entered into by and between the **CITY OF PORT ORANGE, FLORIDA**, a chartered municipal corporation with its principal place of business at 1000 City Center Circle, Port Orange, Florida 32129 (the "City") and **PEGASUS ENGINEERING, LLC** ("Contractor"), a Florida limited liability corporation with its principal place of business at 301 West State Road 434, Suite 309, Winter Springs, Florida 32708, and hereinafter collectively referred to as the "Parties," and is to that certain Contract for Services dated as specified above, and any amendments thereto, hereinafter collectively referred to as the "Contract." The Parties, in exchange for the mutual covenants contained herein and in the Contract, agree as follows:

1. This Task Authorization expressly modifies the Contract and in the event of a conflict, the terms and conditions of this Task Authorization shall prevail.

2. In addition to all other terms and conditions contained in the Contract, Contractor shall provide services relating to FEMA Flood Mitigation Assistance Swift Current Grant Application Development for the Demolition of three (3) Flood-Prone Homes, and as more particularly described in Contractor's Proposal, attached hereto and incorporated herein as Task Authorization Exhibit "1."

3. Upon issuance of written notice by the City to the Contractor, Contractor shall complete the services by April 30, 2029.

4. In return for the services identified above, the City agrees to compensate Contractor at the prices set forth in Exhibit "1" attached hereto and made a part hereof for all purposes, subject to a limit not to exceed $36,500.00. All payments shall be governed by the Local Government Prompt Payment Act as set forth in Sections 218.70 through 218.79, Florida Statutes, as amended.

5. *Truth-in-Negotiations*.

   a. For any fixed fee, cost-plus-a-fixed-fee or guaranteed maximum-not-to-exceed compensation professional service contract or compensation in a Task Authorization over $150,000.00, Architect shall execute a truth-in-negotiation certificate stating that wage rates and other factual unit costs supporting the compensation are accurate, complete, and current at the time of contracting. Any professional service contract or Task Authorization under which such certificate is required must contain a provision that the original contract price or compensation and any additions thereto will be adjusted to exclude any significant sums by which the City determines the contract price or compensation was increased due to inaccurate, incomplete, or noncurrent wage rates and other factual unit costs. All such contract or compensation adjustments must be made within one (1) year following the end of the Contract. Otherwise, such adjustments shall be deemed waived by the Architect and null and void for the purposes of this Contract or Task Authorization. The signature on this Contract by the Architect shall act as the execution of a truth-in-negotiation certificate stating that the wage rates and other factual unit costs supporting the compensation of this Contract are accurate, complete, and current at the time of contracting.

   b. Architect's signature on this Contract or a Task Authorization shall act as execution of a truth-in-negotiation certificate stating that wage rates and other factual unit costs supporting the compensation set forth in this Contract or a Task Authorization are accurate, complete, and current at the time of contract. The certification shall also constitute an affirmation that

Architect has disclosed all debts or fees owed to or that are pending before the City prior to the execution of this Contract of Task Authorization.

6. *Compliance with Other Federal Standards*.

(a) Remedies. Administrative, contractual, or legal remedies in instances where the Contractor violates or breaches Contract terms. See Paragraph 8 - Termination for Default in the Contract, a draft of which is attached hereto and made apart hereof by reference.

(b) Termination for Convenience and Non-Appropriation of Funds. Termination for convenience by the City, including how it will be carried out and the basis for settlement is set forth in Paragraph 6, in the Contract, a draft of which is attached hereto and made apart hereof by reference. Termination for non-appropriation of funds is set forth in Paragraph 11 of the contract, a draft of which is attached hereto and made apart hereof by reference.

(c) Equal Employment Opportunity: During the performance of this Contract, the Contractor agrees as follows:

(i) The Contractor will not discriminate against any employee or applicant for employment because of race, color, religion, sex, sexual orientation, gender identity, or national origin. The Contractor will take affirmative action to ensure that applicants are employed, and that employees are treated during employment without regard to their race, color, religion, sex, sexual orientation, gender identity, or national origin. Such action shall include, but not be limited to the following:

Employment, upgrading, demotion, or transfer; recruitment or recruitment advertising; layoff or termination; rates of pay or other forms of compensation; and selection for training, including apprenticeship. The Contractor agrees to post in conspicuous places, available to employees and applicants for employment, notices to be provided setting forth the provisions of this nondiscrimination clause.

(ii) The Contractor will, in all solicitations or advertisements for employees placed by or on behalf of the Contractor, state that all qualified applicants will receive consideration for employment without regard to race, color, religion, sex, sexual orientation, gender identity, or national origin.

(iii) The Contractor will not discharge or in any other manner discriminate against any employee or applicant for employment because such employee or applicant has inquired about, discussed, or disclosed the compensation of the employee or applicant or another employee or applicant. This provision shall not apply to instances in which an employee who has access to the compensation information of other employees or applicants as a part of such employee's essential job functions discloses the compensation of such other employees or applicants to individuals who do not otherwise have access to such information, unless such disclosure is in response to a formal complaint or charge, in furtherance of an investigation, proceeding, hearing, or action, including an investigation conducted by the employer, or is consistent with the Contractor's legal duty to furnish information.

(iv) The Contractor will send to each labor union or representative of workers with which

he has a collective bargaining agreement or other contract or understanding, a notice to be provided advising the said labor union or workers' representatives of the Contractor's commitments under this section, and shall post copies of the notice in conspicuous places available to employees and applicants for employment.

(v) The Contractor will comply with all provisions of Executive Order 11246 of September 24, 1965, and of the rules, regulations, and relevant orders of the Secretary of Labor.

(vi) The Contractor will furnish all information and reports required by Executive Order 11246 of September 24, 1965, and by rules, regulations, and orders of the Secretary of Labor, or pursuant thereto, and will permit access to his books, records, and accounts by the administering agency and the Secretary of Labor for purposes of investigation to ascertain compliance with such rules, regulations, and orders.

(vii) In the event of the Contractor's noncompliance with the nondiscrimination clauses of this contract or with any of the said rules, regulations, or orders, this Contract may be canceled, terminated, or suspended in whole or in part and the Contractor may be declared ineligible for further Government contracts or federally assisted construction contracts in accordance with procedures authorized in Executive Order 11246 of September 24, 1965, and such other sanctions may be imposed and remedies invoked as provided in Executive Order 11246 of September 24, 1965, or by rule, regulation, or order of the Secretary of Labor, or as otherwise provided by law.

(viii) The Contractor will include the portion of the sentence immediately preceding paragraph (i) and the provisions of paragraphs (i) through (viii) in every subcontract or purchase order unless exempted by rules, regulations, or orders of the Secretary of Labor issued pursuant to section 204 of Executive Order 11246 of September 24, 1965, so that such provisions will be binding upon each subcontractor or vendor. The Contractor will take such action with respect to any subcontract or purchase order as the administering agency may direct as a means of enforcing such provisions, including sanctions for noncompliance:

Provided, however, that in the event a Contractor becomes involved in, or is threatened with, litigation with a subcontractor or vendor as a result of such direction by the administering agency, the Contractor may request the United States to enter into such litigation to protect the interests of the United States.

The applicant further agrees that it will be bound by the above equal opportunity clause with respect to its own employment practices when it participates in federally assisted construction work: *Provided,* that if the applicant so participating is a state or local government, the above equal opportunity clause is not applicable to any agency, instrumentality or subdivision of such government which does not participate in work on or under the Contract.

The applicant agrees that it will assist and cooperate actively with the administering agency and the Secretary of Labor in obtaining the compliance of Contractors and subcontractors with the equal opportunity clause and the rules, regulations, and relevant orders of the Secretary of Labor, that it will furnish the administering agency and the Secretary of Labor such information as they may require for the supervision of such compliance, and that it will otherwise assist the administering agency in the discharge of the agency's primary responsibility for securing compliance.

The applicant further agrees that it will refrain from entering into any contract or contract modification subject to Executive Order 11246 of September 24, 1965, with a contractor debarred from, or who has not demonstrated eligibility for, Government contracts and federally assisted construction contracts pursuant to the Executive Order and will carry out such sanctions and penalties for violation of the equal opportunity clause as may be imposed upon contractors and subcontractors by the administering agency or the Secretary of Labor pursuant to Part II, Subpart D of the Executive Order. In addition, the applicant agrees that if it fails or refuses to comply with these undertakings, the administering agency may take any or all of the following actions: Cancel, terminate, or suspend in whole or in part this grant (contract, loan, insurance, guarantee); refrain from extending any further assistance to the applicant under the program with respect to which the failure or refund occurred until satisfactory assurance of future compliance has been received from such applicant; and refer the case to the Department of Justice for appropriate legal proceedings.

(d) Davis-Bacon Act: If applicable to this Contract, the Contractor agrees to comply with all provisions of the Davis Bacon Act as amended (40 U.S.C. 3141- 3144, and 3146-3148) and the requirements of 29 C.F.R. pt. 5 as may be applicable. Contractor is required to pay wages to laborers and mechanics at a rate not less than the prevailing wages specified in a wage determination made by the Secretary of Labor. In addition, Contractor must be required to pay wages not less than once a week. This Contract is conditioned upon the acceptance of the Department of Labor Wage Determination. **In situations where the Davis-Bacon Act does not apply, neither does the Copeland "Anti-Kickback" Act.**

When required by the federal program legislation, prime construction contracts over $2,000 awarded by the City require the Contractor to comply with the following provisions from 29 C.F.R. § 5.5(a)(1)-(10), and Contractor must include these provisions in full in any subcontracts:

29 C.F.R. § 5.5 Contract provisions and related matters.
(a) The Agency head shall cause or require the contracting officer to insert in full in any contract in excess of $2,000 which is entered into for the actual construction, alteration and/or repair, including painting and decorating, of a public building or public work, or building or work financed in whole or in part from Federal funds or in accordance with guarantees of a Federal agency or financed from funds obtained by pledge of any contract of a Federal agency to make a loan, grant or annual contribution (except where a different meaning is expressly indicated), and which is subject to the labor standards provisions of any of the acts listed in § 5.1, the following clauses (or any modifications thereof to meet the particular needs of

the agency, *Provided*, That such modifications are first approved by the Department of Labor):

(1) Minimum wages.

(i) All laborers and mechanics employed or working upon the site of the work (or under the United States Housing Act of 1937 or under the Housing Act of 1949 in the construction or development of the project), will be paid unconditionally and not less often than once a week, and without subsequent deduction or rebate on any account (except such payroll deductions as are permitted by regulations issued by the Secretary of Labor under the Copeland Act (29 CFR part 3)), the full amount of wages and bona fide fringe benefits (or cash equivalents thereof) due at time of payment computed at rates not less than those contained in the wage determination of the Secretary of Labor which is attached hereto and made a part hereof, regardless of any contractual relationship which may be alleged to exist between the contractor and such laborers and mechanics. Contributions made or costs reasonably anticipated for bona fide fringe benefits under section 1(b)(2) of the Davis–Bacon Act on behalf of laborers or mechanics are considered wages paid to such laborers or mechanics, subject to the provisions of paragraph (a)(1)(iv) of this section; also, regular contributions made or costs incurred for more than a weekly period (but not less often than quarterly) under plans, funds, or programs which cover the particular weekly period, are deemed to be constructively made or incurred during such weekly period. Such laborers and mechanics shall be paid the appropriate wage rate and fringe benefits on the wage determination for the classification of work actually performed, without regard to skill, except as provided in § 5.5(a)(4). Laborers or mechanics performing work in more than one classification may be compensated at the rate specified for each classification for the time actually worked therein:

Provided, That the employer's payroll records accurately set forth the time spent in each classification in which work is performed. The wage determination (including any additional classification and wage rates conformed under paragraph (a)(1)(ii) of this section) and the Davis–Bacon poster (WH–1321) shall be posted at all times by the contractor and its subcontractors at the site of the work in a prominent and accessible place where it can be easily seen by the workers.

(ii)

(A) The contracting officer shall require that any class of laborers or mechanics, including helpers, which is not listed in the wage determination and which is to be employed under the contract shall be classified in conformance with the wage determination. The contracting officer shall approve an additional classification and wage rate and fringe benefits therefore only when the following criteria have been met:

(1) The work to be performed by the classification requested is not performed by a classification in the wage determination; and

(2) The classification is utilized in the area by the construction industry; and

(3) The proposed wage rate, including any bona fide fringe benefits, bears a reasonable relationship to the wage rates contained in the wage determination.

(B) If the contractor and the laborers and mechanics to be employed in the classification (if known), or their representatives, and the contracting officer agree on the classification and wage rate (including the amount designated for fringe benefits where appropriate), a report of the action taken shall be sent by the contracting officer to the Administrator of the Wage and Hour Division, U.S. Department of Labor, Washington, DC 20210. The Administrator, or an authorized representative, will approve, modify, or disapprove every additional classification action within 30 days of receipt and so advise the contracting officer or will notify the contracting officer within the 30–day period that additional time is necessary.

(C) In the event the contractor, the laborers or mechanics to be employed in the classification or their representatives, and the contracting officer do not agree on the proposed classification and wage rate (including the amount designated for fringe benefits, where appropriate), the contracting officer shall refer the questions, including the views of all interested parties and the recommendation of the contracting officer, to the Administrator for determination. The Administrator, or an authorized representative, will issue a determination within 30 days of receipt and so advise the contracting officer or will notify the contracting officer within the 30–day period that additional time is necessary.

(D) The wage rate (including fringe benefits where appropriate) determined pursuant to paragraphs (a)(1)(ii)(B) or (C) of this section, shall be paid to all workers performing work in the classification under this contract from the first day on which work is performed in the classification.

(iii) Whenever the minimum wage rate prescribed in the contract for a class of laborers or mechanics includes a fringe benefit which is not expressed as an hourly rate, the contractor shall either pay the benefit as stated in the wage determination or shall pay another bona fide fringe benefit or an hourly cash equivalent thereof.

(iv) If the contractor does not make payments to a trustee or other third person, the contractor may consider as part of the wages of any laborer or mechanic the amount of any costs reasonably anticipated in providing bona fide fringe benefits under a plan or program, *Provided*, That the Secretary of Labor has found, upon the written request of the contractor, that the applicable standards of the Davis–Bacon Act have been met. The Secretary of Labor may require the contractor to set aside in a separate account assets for the meeting of obligations under the plan or program.

(2) Withholding.

The (write in name of Federal Agency or the loan or grant recipient) shall upon its own action or upon written request of an authorized representative of the Department of Labor withhold or cause to be withheld from the contractor under this contract or any other Federal contract with the same prime contractor, or any other federally-assisted contract subject to Davis–Bacon prevailing wage requirements, which is held by the same prime contractor, so much of the accrued payments or advances as may be considered necessary to pay laborers and mechanics, including apprentices, trainees, and helpers, employed by the contractor or any subcontractor the full amount of wages required by the contract. In the event of failure to pay any laborer or mechanic, including any apprentice,

trainee, or helper, employed or working on the site of the work (or under the United States Housing Act of 1937 or under the Housing Act of 1949 in the construction or development of the project), all or part of the wages required by the contract, the (Agency) may, after written notice to the contractor, sponsor, applicant, or owner, take such action as may be necessary to cause the suspension of any further payment, advance, or guarantee of funds until such violations have ceased.
(3) Payrolls and basic records.
(i) Payrolls and basic records relating thereto shall be maintained by the contractor during the course of the work and preserved for a period of three years thereafter for all laborers and mechanics working at the site of the work (or under the United States Housing Act of 1937, or under the Housing Act of 1949, in the construction or development of the project). Such records shall contain the name, address, and social security number of each such worker, his or her correct classification, hourly rates of wages paid (including rates of contributions or costs anticipated for bona fide fringe benefits or cash equivalents thereof of the types described in section 1(b)(2)(B) of the Davis–Bacon Act), daily and weekly number of hours worked, deductions made and actual wages paid. Whenever the Secretary of Labor has found under 29 CFR 5.5(a) (1)(iv) that the wages of any laborer or mechanic include the amount of any costs reasonably anticipated in providing benefits under a plan or program described in section 1(b)(2)(B) of the Davis–Bacon Act, the contractor shall maintain records which show that the commitment to provide such benefits is enforceable, that the plan or program is financially responsible, and that the plan or program has been communicated in writing to the laborers or mechanics affected, and records which show the costs anticipated or the actual cost incurred in providing such benefits. Contractors employing apprentices or trainees under approved programs shall maintain written evidence of the registration of apprenticeship programs and certification of trainee programs, the registration of the apprentices and trainees, and the ratios and wage rates prescribed in the applicable programs.
(ii)
(A) The contractor shall submit weekly for each week in which any contract work is performed a copy of all payrolls to the (write in name of appropriate federal agency) if the agency is a party to the contract, but if the agency is not such a party, the contractor will submit the payrolls to the applicant, sponsor, or owner, as the case may be, for transmission to the (write in name of agency). The payrolls submitted shall set out accurately and completely all of the information required to be maintained under 29 CFR 5.5(a)(3)(i), except that full social security numbers and home addresses shall not be included on weekly transmittals. Instead the payrolls shall only need to include an individually identifying number for each employee (e.g., the last four digits of the employee's social security number). The required weekly payroll information may be submitted in any form desired. Optional Form WH–347 is available for this purpose from the Wage and Hour Division Web site at http://www.dol.gov/esa/whd/forms/wh347instr.htm or its successor site. The prime contractor is responsible for the submission of copies of payrolls by all subcontractors. Contractors and subcontractors shall maintain the full social security number and current address of each covered worker, and shall

provide them upon request to the (write in name of appropriate federal agency) if the agency is a party to the contract, but if the agency is not such a party, the contractor will submit them to the applicant, sponsor, or owner, as the case may be, for transmission to the (write in name of agency), the contractor, or the Wage and Hour Division of the Department of Labor for purposes of an investigation or audit of compliance with prevailing wage requirements. It is not a violation of this section for a prime contractor to require a subcontractor to provide addresses and social security numbers to the prime contractor for its own records, without weekly submission to the sponsoring government agency (or the applicant, sponsor, or owner).

(B) Each payroll submitted shall be accompanied by a "Statement of Compliance," signed by the contractor or subcontractor or his or her agent who pays or supervises the payment of the persons employed under the contract and shall certify the following:

(1) That the payroll for the payroll period contains the information required to be provided under § 5.5 (a)(3)(ii) of Regulations, 29 CFR part 5, the appropriate information is being maintained under § 5.5 (a)(3)(i) of Regulations, 29 CFR part 5, and that such information is correct and complete;

(2) That each laborer or mechanic (including each helper, apprentice, and trainee) employed on the contract during the payroll period has been paid the full weekly wages earned, without rebate, either directly or indirectly, and that no deductions have been made either directly or indirectly from the full wages earned, other than permissible deductions as set forth in Regulations, 29 CFR part 3;

(3) That each laborer or mechanic has been paid not less than the applicable wage rates and fringe benefits or

cash equivalents for the classification of work performed, as specified in the applicable wage determination incorporated into the contract.

(C) The weekly submission of a properly executed certification set forth on the reverse side of Optional Form WH– 347 shall satisfy the requirement for submission of the "Statement of Compliance" required by paragraph (a)(3)(ii) (B) of this section.

(D) The falsification of any of the above certifications may subject the contractor or subcontractor to civil or criminal prosecution under section 1001 of title 18 and section 231 of title 31 of the United States Code.

(iii) The contractor or subcontractor shall make the records required under paragraph (a)(3)(i) of this section available for inspection, copying, or transcription by authorized representatives of the (write the name of the agency) or the Department of Labor, and shall permit such representatives to interview employees during working hours on the job. If the contractor or subcontractor fails to submit the required records or to make them available, the Federal agency may, after written notice to the contractor, sponsor, applicant, or owner, take such action as may be necessary to cause the suspension of any further payment, advance, or guarantee of funds. Furthermore, failure to submit the required records upon request or to make such records available may be grounds for debarment action pursuant to 29 CFR 5.12.

(4) Apprentices and trainees.

(i) Apprentices.

Apprentices will be permitted to work at less than the predetermined rate for the work they performed when they are employed pursuant to and individually registered in a bona fide apprenticeship program registered with the U.S. Department of Labor, Employment and Training Administration, Office of Apprenticeship Training, Employer and Labor Services, or with a State Apprenticeship Agency recognized by the Office, or if a person is employed in his or her first 90 days of probationary employment as an apprentice in such an apprenticeship program, who is not individually registered in the program, but who has been certified by the Office of Apprenticeship Training, Employer and Labor Services or a State Apprenticeship Agency (where appropriate) to be eligible for probationary employment as an apprentice. The allowable ratio of apprentices to journeymen on the job site in any craft classification shall not be greater than the ratio permitted to the contractor as to the entire work force under the registered program. Any worker listed on a payroll at an apprentice wage rate, who is not registered or otherwise employed as stated above, shall be paid not less than the applicable wage rate on the wage determination for the classification of work actually performed. In addition, any apprentice performing work on the job site in excess of the ratio permitted under the registered program shall be paid not less than the applicable wage rate on the wage determination for the work actually performed. Where a contractor is performing construction on a project in a locality other than that in which its program is registered, the ratios and wage rates (expressed in percentages of the journeyman's hourly rate) specified in the contractor's or subcontractor's registered program shall be observed. Every apprentice must be paid at not less than the rate specified in the registered program for the apprentice's level of progress, expressed as a percentage of the journeymen hourly rate specified in the applicable wage determination. Apprentices shall be paid fringe benefits in accordance with the provisions of the apprenticeship program. If the apprenticeship program does not specify fringe benefits, apprentices must be paid the full amount of fringe benefits listed on the wage determination for the applicable classification. If the Administrator determines that a different practice prevails for the applicable apprentice classification, fringes shall be paid in accordance with that determination. In the event the Office of Apprenticeship Training, Employer and Labor Services, or a State Apprenticeship Agency recognized by the Office, withdraws approval of an apprenticeship program, the contractor will no longer be permitted to utilize apprentices at less than the applicable predetermined rate for the work performed until an acceptable program is approved.

(ii) Trainees.

Except as provided in 29 CFR 5.16, trainees will not be permitted to work at less than the predetermined rate for the work performed unless they are employed pursuant to and individually registered in a program which has received prior approval, evidenced by formal certification by the U.S. Department of Labor, Employment and Training Administration. The ratio of trainees to journeymen on the job site shall not be greater than permitted under the plan approved by the Employment and Training Administration. Every trainee must be paid at not less

than the rate specified in the approved program for the trainee's level of progress, expressed as a percentage of the journeyman hourly rate specified in the applicable wage determination. Trainees shall be paid fringe benefits in accordance with the provisions of the trainee program. If the trainee program does not mention fringe benefits, trainees shall be paid the full amount of fringe benefits listed on the wage determination unless the Administrator of the Wage and Hour Division determines that there is an apprenticeship program associated with the corresponding journeyman wage rate on the wage determination which provides for less than full fringe benefits for apprentices. Any employee listed on the payroll at a trainee rate who is not registered and participating in a training plan approved by the Employment and Training Administration shall be paid not less than the applicable wage rate on the wage determination for the classification of work actually performed. In addition, any trainee performing work on the job site in excess of the ratio permitted under the registered program shall be paid not less than the applicable wage rate on the wage determination for the work actually performed. In the event the Employment and Training Administration withdraws approval of a training program, the contractor will no longer be permitted to utilize trainees at less than the applicable predetermined rate for the work performed until an acceptable program is approved.

(iii) Equal employment opportunity.

The utilization of apprentices, trainees and journeymen under this part shall be in conformity with the equal employment opportunity requirements of Executive Order 11246, as amended, and 29 CFR part 30.

(5) Compliance with Copeland Act requirements.

The contractor shall comply with the requirements of 29 CFR part 3, which are incorporated by reference in this contract.

(6) Subcontracts.

The contractor or subcontractor shall insert in any subcontracts the clauses contained in 29 CFR 5.5(a) (1) through (10) and such other clauses as the (write in the name of the Federal agency) may by appropriate instructions require, and also a clause requiring the subcontractors to include these clauses in any lower tier subcontracts. The prime contractor shall be responsible for the compliance by any subcontractor or lower tier subcontractor with all the contract clauses in 29 CFR 5.5.

(7) Contract termination: debarment.

A breach of the contract clauses in 29 CFR 5.5 may be grounds for termination of the contract, and for debarment as a contractor and a subcontractor as provided in 29 CFR 5.12.

(8) Compliance with Davis–Bacon and Related Act requirements.

All rulings and interpretations of the Davis–Bacon and Related Acts contained in 29 CFR parts 1, 3, and 5 are herein incorporated by reference in this contract.

(9) Disputes concerning labor standards.

Disputes arising out of the labor standards provisions of this contract shall not be subject to the general disputes clause of this contract. Such disputes shall be resolved in accordance with the procedures of the Department of Labor set forth in 29 CFR parts 5, 6, and 7. Disputes within the meaning of this clause include

disputes between the contractor (or any of its subcontractors) and the contracting agency, the U.S. Department of Labor, or the employees or their representatives.
(10) Certification of eligibility.
(i) By entering into this contract, the contractor certifies that neither it (nor he or she) nor any person or firm who has an interest in the contractor's firm is a person or firm ineligible to be awarded Government contracts by virtue of section 3(a) of the Davis–Bacon Act or 29 CFR 5.12(a)(1)."

(e) Copeland Anti Kick Back Act: Compliance with the Copeland "Anti-Kickback" Act.

Contractor. The Contractor shall comply with 18 U.S.C. § 874, 40 U.S.C. § 3145, and the requirements of 29 C.F.R. Part 3 as may be applicable, which are incorporated by reference into this contract.

Subcontracts. The Contractor or subcontractor shall insert in any subcontracts the clause above and such other clauses as FEMA may by appropriate instructions require, and also a clause requiring the subcontractors to include these clauses in any lower tier subcontracts. The prime Contractor shall be responsible for the compliance by any subcontractor or lower tier subcontractor with all of these contract clauses.

Breach. A breach of the Contract clauses above may be grounds for termination of the Contract, and for debarment as a contractor and subcontractor as provided in 29 C.F.R. § 5.12.

(f) Contract Work Hours and Safety Standards Act:

For all contracts over $100,000 that involve the employment of mechanics, laborers, and construction work:

(i) Compliance with the Contract Work Hours and Safety Standards Act.

(1) *Overtime requirements.* No contractor or subcontractor contracting for any part of the Contract work which may require or involve the employment of laborers or mechanics shall require or permit any such laborer or mechanic in any workweek in which he or she is employed on such work to work in excess of forty hours in such workweek unless such laborer or mechanic receives compensation at a rate not less than one and one-half times the basic rate of pay for all hours worked in excess of forty hours in such workweek.

(2) *Violation; liability for unpaid wages; liquidated damages.* In the event of any violation of the clause set forth in paragraph (1) of this section the Contractor and any subcontractor responsible therefor shall be liable for the unpaid wages. In addition, such Contractor and subcontractor shall be liable to the United States (in the case of work done under contract for the District of Columbia or a territory, to

such District or to such territory), for liquidated damages. Such liquidated damages shall be computed with respect to each individual laborer or mechanic, including watchmen and guards, employed in violation of the clause set forth in paragraph (1) of this section, in the sum of $27 for each calendar day on which such individual was required or permitted to work in excess of the standard workweek of forty hours without payment of the overtime wages required by the clause set forth in paragraph (1) of this section.

(3) *Withholding for unpaid wages and liquidated damages.* The City shall upon its own action or upon written request of an authorized representative of the Department of Labor withhold or cause to be withheld, from any moneys payable on account of work performed by the Contractor or subcontractor under any such contract or any other federal contract with the same prime Contractor, or any other federally-assisted contract subject to the Contract Work Hours and Safety Standards Act, which is held by the same prime Contractor, such sums as may be determined to be necessary to satisfy any liabilities of such Contractor or subcontractor for unpaid wages and liquidated damages as provided in the clause set forth in paragraph (2) of this section.

(4) *Subcontracts.* The Contractor or subcontractor shall insert in any subcontracts the clauses set forth in paragraph (1) through (4) of this section and also a clause requiring the subcontractors to include these clauses in any lower tier subcontracts. The prime Contractor shall be responsible for compliance by any subcontractor or lower tier subcontractor with the clauses set forth in paragraphs (1) through (4) of this section.

(ii) Further Compliance with the Contract Work Hours and Safety Standards Act.

In addition to the clauses contained in subparagraphs (i)(1) thru (4), hereinabove, in any applicable contract subject only to the Contract Work Hours and Safety Standards Act and not to any of the other statutes cited in 29 C.F.R. § 5.1, the Contractor shall comply with the following provisions and insert the same in any applicable contracts with subcontractors:

(1) The Contractor or subcontractor shall maintain payrolls and basic payroll records during the course of the work and shall preserve them for a period of three years from the completion of the Contract for all laborers and mechanics, including guards and watchmen, working on the Contract. Such records shall contain the name and address of each such employee, social security number, correct classifications, hourly rates of wages paid, daily and weekly number of hours worked, deductions made, and actual wages paid.

(2) Records to be maintained under this provision shall be made available by the Contractor or subcontractor for inspection, copying, or transcription by authorized representatives of the Department of Homeland Security, the Federal

Emergency Management Agency, and the Department of Labor, and the Contractor or subcontractor will permit such representatives to interview employees during working hours on the job.

(g) Rights to Inventions Made Under a Contract or Agreement.

(1) Stafford Act Disaster Grants. This requirement does not apply to the Public Assistance, Hazard Mitigation Grant Program, Fire Management Assistance Grant Program, Crisis Counseling Assistance and Training Grant Program, Disaster Case Management Grant Program, and Federal Assistance to Individuals and Households – Other Needs Assistance Grant Program, as FEMA awards under these programs do not meet the definition of "funding agreement."

(2) If the FEMA award meets the definition of "funding agreement" under 37 C.F.R. § 401.2(a) and the non-Federal entity wishes to enter into a contract with a small business firm or nonprofit organization regarding the substitution of parties, assignment or performance of experimental, developmental, or research work under that "funding agreement," the non-Federal entity must comply with the requirements of 37 C.F.R. Part 401 (Rights to Inventions Made by Nonprofit Organizations and Small Business Firms Under Government Grants, Contracts and Cooperative Agreements), and any implementing regulations issued by FEMA. See 2 C.F.R. Part 200, Appendix II, ¶ F.

(3) The regulation at 37 C.F.R. § 401.2(a) currently defines "funding agreement" as any contract, grant, or cooperative agreement entered into between any Federal agency, other than the Tennessee Valley Authority, and any contractor for the performance of experimental, developmental, or research work funded in whole or in part by the Federal government. This term also includes any assignment, substitution of parties, or subcontract of any type entered into for the performance of experimental, developmental, or research work under a funding agreement as defined in the first sentence of this paragraph.

(h) Clean Air Act (42 U.S.C. 7401–7671q.) and the Federal Water Pollution Control Act (33 U.S.C. 1251– 1387) as amended.

For contracts exceeding $150,000.00, the following provisions apply:

"Clean Air Act"

The Contractor agrees to comply with all applicable standards, orders or regulations issued pursuant to the Clean Air Act, as amended, 42 U.S.C. § 7401 et seq.

The Contractor agrees to report each violation to the City and understands and agrees that the City will, in turn, report each violation as required to assure notification to the Federal Emergency Management Agency (FEMA), and the appropriate Environmental Protection Agency Regional Office.

The Contractor agrees to include these requirements in each subcontract exceeding $150,000 financed in whole or in part with federal assistance provided by FEMA.

"Federal Water Pollution Control Act"

The Contractor agrees to comply with all applicable standards, orders, or regulations issued pursuant to the federal Water Pollution Control Act, as amended, 33 U.S.C. § 1251 et seq.

The Contractor agrees to report each violation to the City and understands and agrees that the City, in turn, report each violation as required to assure notification to the Florida Division of Emergency Management ("FDEM"), Federal Emergency Management Agency (FEMA), and the appropriate Environmental Protection Agency Regional Office.

The Contractor agrees to include these requirements in each subcontract exceeding $150,000 financed in whole or in part with federal assistance provided by FEMA.

(i) Suspension and Debarment: This Contract is a covered transaction for purposes of 2 C.F.R. Part 180 and 2 C.F.R. Part 3000. As such, the Contractor is required to verify that none of the Contractor's principals (defined at 2 C.F.R. § 180.995) or its affiliates (defined at 2 C.F.R. § 180.905) are excluded (defined at 2 C.F.R. § 180.940) or disqualified (defined at 2 C.F.R. § 180.935).

The Contractor must comply with 2 C.F.R. Part 180, subpart C and 2 C.F.R. Part 3000, subpart C, and must include a requirement to comply with these regulations in any lower tier covered transaction it enters into.

This certification is a material representation of fact relied upon by City. If it is later determined that the Contractor did not comply with 2 C.F.R. Part 180, subpart C and 2 C.F.R. Part 3000, subpart C, in addition to remedies available to City, the federal government may pursue available remedies, including but not limited to suspension and/or debarment.

The Contractor agrees to comply with the requirements of 2 C.F.R. Part 180, subpart C and 2 C.F.R. Part 3000, subpart C while this offer is valid and throughout the period of any contract that may arise from this offer. The Contractor further agrees to include a provision requiring such compliance in its lower tier covered transactions.

(j) Byrd Anti-Lobbying Amendment 31 U.S.C. § 1352 (as amended): Contractors who apply or bid for an award of more than $100,000 shall file the required certification. Each tier certifies to the tier above that it will not and has not used federally appropriated funds to pay any person or organization for influencing or attempting to influence an officer or employee of any agency, a Member of Congress, officer or employee of Congress, or an employee of a Member of Congress in connection with obtaining any federal contract, grant, or any other award covered by 31 U.S.C. § 1352. Each tier shall also disclose any lobbying with non-federal funds that takes place in connection with obtaining any federal award. Such disclosures are forwarded from tier to tier up to the recipient who in turn will forward the certification(s) to the federal awarding agency.

(k) Procurement of Recovered Materials: Requirements: The requirements of Section 6002 include procuring only items designated in guidelines of the EPA at 40 C.F.R. Part 247 that contain the highest percentage of recovered materials practicable, consistent with maintaining a satisfactory level of competition, where the purchase price of the item exceeds $10,000 or the value of the quantity acquired by the preceding fiscal year exceeded $10,000; procuring solid waste management services in a manner that maximizes energy and resource recovery; and establishing an affirmative procurement program for procurement of recovered materials identified in the EPA guidelines.

A. In the performance of this contract, the Contractor shall make maximum use of products

containing recovered materials that are EPA-designated items unless the product cannot be acquired.

1. Competitively within a timeframe providing for compliance with the contract performance schedule;
2. Meeting contract performance requirements; or
3. At a reasonable price.

B. Information about this requirement, along with the list of EPA-designated items, is available at EPA's Comprehensive Procurement Guidelines web site, https://www.epa.gov/smm/comprehensive-procurement-guideline-cpg-program

C. The Contractor also agrees to comply with all other applicable requirements of Section 6002 of the Solid Waste Disposal Act.

Information about this requirement, along with the list of EPA- designated items, is available at EPA's Comprehensive Procurement Guidelines website, https://www.epa.gov/smm/comprehensive-procurement-guideline-cpg-program.

(l) Prohibition on Contracting for Covered Telecommunications Equipment or Services.

(i) *Definitions.* As used in this clause, the terms backhaul; covered foreign country; covered telecommunications equipment or services; interconnection arrangements; roaming; substantial or essential component; and telecommunications equipment or services have the meaning as defined in FEMA Policy 405-143-1, Prohibitions on Expending FEMA Award Funds for Covered Telecommunications Equipment or Services (Interim), as used in this clause—

(ii) Prohibitions.

(1) Section 889(b) of the John S. McCain National Defense Authorization Act for Fiscal Year 2019, Pub. L. No. 115-232, and 2 C.F.R. § 200.216 prohibit the head of an executive agency on or after Aug.13, 2020, from obligating or expending grant, cooperative agreement, loan, or loan guarantee funds on certain telecommunications products or from certain entities for national security reasons.

(2) Unless an exception in paragraph (iii) of this clause applies, the Contractor and its subcontractors may not use grant, cooperative agreement, loan, or loan guarantee funds from the Federal Emergency Management Agency to:

a. Procure or obtain any equipment, system, or service that uses covered telecommunications equipment or services as a substantial or essential component of any system, or as critical technology of any system;

b. Enter into, extend, or renew a contract to procure or obtain any equipment, system, or service that uses covered telecommunications equipment or services as a substantial or essential component of any system, or as critical technology of any system;

c. Enter into, extend, or renew contracts with entities that use covered telecommunications equipment or services as a substantial or essential component of any system, or as critical technology as part of any system; or

d Provide, as part of its performance of this Contract, subcontract, or other contractual instrument, any equipment, system, or service that uses covered telecommunications equipment or services as a substantial or essential component of any system, or as critical technology as part of any system.

(iii) Exceptions.

(1) This clause does not prohibit Contractors from providing—

a. A service that connects to the facilities of a third-party, such as backhaul, roaming, or interconnection arrangements; or

b. Telecommunications equipment that cannot route or redirect user data traffic or permit visibility into any user data or packets that such equipment transmits or otherwise handles.

(2) By necessary implication and regulation, the prohibitions also do not apply to:

a. Covered telecommunications equipment or services that:

1. Are *not used* as a substantial or essential component of any system; *and*
2. Are *not used* as critical technology of any system.

b. Other telecommunications equipment or services that are not considered covered telecommunications equipment or services.

(iv) Reporting requirement.

(1) In the event the Contractor identifies covered telecommunications equipment or services used as a substantial or essential component of any system, or as critical technology as part of any system, during contract performance, or the Contractor is notified of such by a subcontractor at any tier or by any other source, the Contractor shall report the information in paragraph (iv)(2) of this clause to the recipient or subrecipient, unless elsewhere in this Contract are established procedures for reporting the information.

(2) The Contractor shall report the following information pursuant to paragraph (iv)(1) of this clause:

a. Within one business day from the date of such identification or notification: The contract number; the order number(s), if applicable; supplier name; supplier unique entity identifier (if known); supplier Commercial and Government Entity (CAGE) code (if known); brand; model number (original equipment manufacturer number, manufacturer

part number, or wholesaler number); item description; and any readily available information about mitigation actions undertaken or recommended.

b. Within 10 business days of submitting the information in paragraph (iv)(2)(a) of this clause: Any further available information about mitigation actions undertaken or recommended. In addition, the Contractor shall describe the efforts it undertook to prevent use or submission of covered telecommunications equipment or services, and any additional efforts that will be incorporated to prevent future use or submission of covered telecommunications equipment or services.

(v) *Subcontracts.* The Contractor shall insert the substance of this clause, including this paragraph (v), in all subcontracts and other contractual instruments.

(m) Domestic Preference for Procurements. As appropriate, and to the extent consistent with law, the Contractor should, to the greatest extent practicable, provide a preference for the purchase, acquisition, or use of goods, products, or materials produced in the United States. This includes, but is not limited to iron, aluminum, steel, cement, and other manufactured products. For purposes of this clause:

Produced in the United States means, for iron and steel products, that all manufacturing processes, from the initial melting stage through the application of coatings, occurred in the United States.

Manufactured products mean items and construction materials composed in whole or in part of non-ferrous metals such as aluminum; plastics and polymer-based products such as polyvinyl chloride pipe; aggregates such as concrete; glass, including optical fiber; and lumber.

(n) Access to Records and Reports:

The Contractor agrees to provide City, Recipient (if applicable), the FEMA Administrator, the Comptroller General of the United States, or any of their authorized representatives access to any books, documents, papers, and records of the Contractor which are directly pertinent to this Contract for the purposes of making audits, examinations, excerpts, and transcriptions.

The Contractor agrees to permit any of the foregoing parties to reproduce by any means whatsoever or to copy excerpts and transcriptions as reasonably needed.

The Contractor agrees to provide the FEMA Administrator or his authorized representatives access to construction or other work sites pertaining to the work being completed under the contract.

In compliance with section 1225 of the Disaster Recovery Act of 2018, the City and the Contractor acknowledge and agree that no language in this contract is intended to prohibit audits or internal reviews by the FEMA Administrator or the Comptroller General of the United States.

(o) Changes. To be allowable under a FEMA grant or cooperative agreement award, the cost of any contract change, modification, amendment, addendum, change order, or constructive change must be necessary, allocable, within the scope of the grant or cooperative agreement, reasonable for the scope

of work, and otherwise allowable. This Contract addresses any potential requests for modifications or changes to the Contract terms as contained herein above.

(p) DHS Seal, LOGO, and Flags. The Contractor shall not use the Department of Homeland Security (DHS) seal(s), logos, crests, or reproductions of flags or likenesses of DHS agency officials without specific FEMA pre-approval. The Contractor shall include this provision in any subcontracts.

(q) Compliance with Federal Laws, Regulations and Executive Orders and Acknowledgement of Federal Funding. This is an acknowledgment that FEMA financial assistance will be used to fund all or a portion of the Contract. The Contractor will comply with all applicable federal law, regulations, and Executive Orders, FEMA policies, procedures, and directives. The Contractor shall comply with all uniform administrative requirements, cost principles, and audit requirements for federal awards. Contractor shall ensure that all subcontracts comply with the same.

(r) No Obligation by Federal Government. The Federal Government is not a party to this Contract and is not subject to any obligations or liabilities to the City, Contractor, or any other party pertaining to any matter resulting from the Contract.

(s) Program Fraud and False or Fraudulent or Related Acts. The Contractor acknowledges that 31 U.S.C. Chap. 38 (Administrative Remedies for False Claims and Statements) applies to the Contractors' actions pertaining to this Contract.

(t) Affirmative Socioeconomic Steps. If subcontracts are to be let, the prime Contractor is required to take all necessary steps identified in 2 C.F.R. § 200.321(b)(1)-(5) to ensure that small and minority businesses, women's business enterprises, and labor surplus area firms are used when possible.

(u) Copyright and Data Rights. License and Delivery of Works Subject to Copyright and Data Rights. The Contractor grants to the City, a paid-up, royalty-free, nonexclusive, irrevocable, worldwide license in data first produced in the performance of this Contract to reproduce, publish, or otherwise use, including prepare derivative works, distribute copies to the public, and perform publicly and display publicly such data. For data required by the contract but not first produced in the performance of this Contract, the Contractor will identify such data and grant to the City or acquires on its behalf a license of the same scope as for data first produced in the performance of this Contract. Data, as used herein, shall include any work subject to copyright under 17 U.S.C. § 102, for example, any written reports or literary works, software and/or source code, music, choreography, pictures or images, graphics, sculptures, videos, motion pictures or other audiovisual works, sound and/or video recordings, and architectural works. Upon or before the completion of this Contract, the Contractor will deliver to the City data first produced in the performance of this contract and data required by the contract but not first produced in the performance of this contract in formats acceptable by the City.

(v) Drug Free Workplace Requirements: Drug-free workplace requirements in accordance with Drug Free Workplace Act of 1988 (Pub l 100-690, Title V, Subtitle D). All Contractors entering into Federal funded contracts over $100,000 must comply with Federal Drug Free workplace requirements as Drug Free Workplace Act of 1988. The Contractor shall comply with this requirement.

(w) Mandatory Disclosures: The Contractor must disclose in writing all violations of Federal criminal law involving fraud, bribery, or gratuity violations potentially affecting the Federal award.

(x) Record Retention: Contractor will retain all required records pertinent to this contract for a period of five years after closeout of the FEMA grant, beginning on a date as described in 2 C.F.R.

§200.333 and retained in compliance with 2 C.F.R. §200.333. This provision is supplemental to other provisions in this Agreement.

(y) Federal Changes: Contractor shall comply with all applicable Federal agency regulations, policies, procedures and directives, including without limitation those listed directly or by reference, as they may be amended or promulgated from time to time during the term of the Contract.

(z) Safeguarding Personal Identifiable Information: Contractor will take reasonable measures to safeguard protected personally identifiable information and other information designated as sensitive by the awarding agency or is considered sensitive consistent with applicable Federal, State and/or local laws regarding privacy and obligations of confidentiality.

(aa) Build America, Buy America Act. If applicable to this Contract, the Contractor shall comply with Build America, Buy America Act ("BABAA"), as part of the Infrastructure Investment and Jobs Act ("IIJA") (Pub. L. 117-58) and BABA provisions of the Act, 41 U.S.C. 8301, unless covered by a waiver.

Contractors and their subcontractors who apply or bid for an award for an infrastructure project subject to the domestic preference requirement in the BABAA shall file the required certification to the non-federal entity with each bid or offer for an infrastructure project, unless a domestic preference requirement is waived by FEMA.

Contractors and subcontractors certify that no federal financial assistance funding for infrastructure projects will be provided unless all the iron, steel, manufactured projects, and construction materials used in the project are produced in the United States. BABAA, Pub. L. No. 117-58, §§ 70901-52. Contractors and subcontractors shall also disclose any use of federal financial assistance for infrastructure projects that do not ensure compliance with BABAA domestic preference requirement. Such disclosures shall be forwarded to the grant recipient who in turn will forward the disclosures to FEMA, the federal awarding agency; subrecipients will forward disclosures to the pass-through entity, who will in turn forward the disclosures to FEMA.

7. If applicable to this Contract, for FEMA financial assistance programs subject to BABAA, Contractor and subcontractors must sign and submit a certification to the next tier (e.g., subcontractors submit to the Contractor; Contractor submits to the City).

8. This Task Authorization may be executed in one or more counterparts, each of which shall be deemed to be an original but all of which together shall constitute one and the same instrument. The delivery by facsimile or e-mail of an executed copy of this Task Authorization shall be deemed valid as if an original signature was delivered. No contract shall be formed between the Contractor and the City until the City signs this Task Authorization.

IN WITNESS WHEREOF, the Parties have made and executed this Task Authorization for the purposes herein expressed on the dates set forth below.

Witnesses:

PEGASUS ENGINEERING, LLC

_____ By: _____

Printed Name: _____ Fursan Munjed, Managing Member

Date: _____

_____

Printed Name: _____

At this time the City <u>does not</u> accept electronic/digital signatures.
A wet signature is required for this document.

CITY OF PORT ORANGE

By:_____
Scott Stiltner, Mayor

Date:_____

ATTEST:

By:_____
Robin L. Fenwick, MMC, City Clerk

Date:_____

EXHIBIT "1"

Contractor's Proposal

Consisting of 4 Pages

Pegasus ENGINEERING

May 12, 2025 P-229928

Ms. Margaret Tomlinson, RLA, LEED AP
Construction & Engineering Manager
Community Development
City of Port Orange
1000 City Center Circle
Port Orange, Florida 32129

Re: Acquisition and Demolition of 3 Flood-Prone Homes as part of the Hazard Mitigation Grant Program under Hurricane Idalia Project No. 4734-002-R

Subj: Project Management / Grant Administration Support Services

Dear Ms. Tomlinson:

Pegasus Engineering LLC is pleased to submit this proposal for Project Management / Grant Administration Support Services for the Acquisition and Demolition of 3 Flood-Prone Homes project that involves the following properties:

- 798 Sugar House Drive, Port Orange, FL 32129 (Joan Burnette)
- 893 Sugar House Drive, Port Orange, FL 32129 (Chloe Howard)
- 5899 Trailwood Drive, Port Orange, FL 32127 (Myron Stipanovic and Shirley Madden)

The scope of work for this project includes the acquisition and demolition of the above-referenced property to permanently eliminate the risk of future flood damage and prevent health and safety risks for the homeowners. Upfront work includes demolition permitting, boundary surveying services, appraisal services, closing services (i.e., title search, mortgage release), and demolition work. Removing debris, abandoning any wells and/or septic tanks (if applicable), and disconnecting all utilities will follow demolition. The properties will be converted to open space and deed-restricted in perpetuity, in accordance with FEMA program requirements pursuant to 44 CFR 206.434 (e).

This proposal incorporates the following project management/grant administration services related to the Acquisition and Demolition of 3 Flood-Prone Home project:

1. Perform a technical review of the grant agreement issued by FDEM, identify the project-specific HMGP grant requirements that the City must comply with and coordinate with City staff regarding Pegasus' review comments that will require revisions to the draft grant agreement for further coordination with FDEM.

2. Coordinate with the City regarding compliance with the Federal procurement standards in 2 C.F.R. §§200.318 through 200.327 and required contract provisions in Appendix II to 2 C.F.R. Part 200, as professional services needed for the implementation of the project are secured.

3. Coordinate closely with the City, homeowners, demolition contractor, closing agency, and others as needed and throughout the life of the project.

4. Prepare and submit Quarterly Reports to FDEM, as required by the grant agreement.

5. Coordinate with City staff regarding paid invoices, cancelled checks and supporting financial documentation.

6. Prepare and submit Reimbursement Requests to FDEM.

7. Coordinate with FDEM staff, as needed, during the life of the project.

8. Collect the Final Deliverables, perform a technical review of the documentation and prepare a final deliverables package for submittal to FDEM.

9. Prepare for and conduct final field inspections to corroborate the final land use of the project sites.

10. Submit all Work Products electronically to the City of Port Orange and FDEM.

The above-described services will be performed for an hourly not-to-exceed fee amount of **$36,500.00**. Reimbursable expenses, such as courier, tolls, mileage, photocopies, plotting, and exhibits incurred in connection with the above-described work will be included in the above quoted fee. If you have any questions, please contact me directly at 407-992-9160, extension 309, or by email at david@pegasusengineering.net.

Sincerely,

PEGASUS ENGINEERING, LLC

David W. Hamstra, P.E.
Principal / Project Manager

cc: Valerie Duhl, City of Port Orange
Leylah Saavedra, Pegasus Engineering, LLC

Acquisition and Demolition of 3 Flood-Prone Homes
as part of the Hazard Mitigation Grant Program under Hurricane Idalia
Project No. 4734-002-R

Project Management / Grant Administration Support Services

Approved for Pegasus Engineering, LLC

Juan Fong, P.E.	Principal Officer's Title	May 12, 2025 Date

This proposal is hereby accepted and authorization to proceed is hereby given.
(Please return one executed copy of this proposal for our Pegasus Engineering records).

See Page 21 of Task Authorization No. 14

Authorized Signature	Officer's Title	Date

Manhour and Fee Estimate
for the

Acquisition and Demolition of 3 Flood-Prone Homes (Project No. 4734-002-R)
Project Management / Grant Administration Support Services

Task Description (Current Hourly Rate)	Project Manager (Hamstra, P.E.) $195.00	Sr. Project Engineer (Saavedra, P.E.) $185.00	Project Engineer (Whikehart, P.E.) $150.00	CADD Technician (Greenough) $120.00	Administrative Assistant (Staff) $85.00	Task Hours	Task Fees
1. Perform a technical review of the grant agreement issued by FDEM and provided review comments, if needed	0	4	0	0	0	4	$740.00
2. Coordinate with the City regarding compliance with 2 C.F.R. §§200 as the required professional services are secured	0	12	0	0	6	18	$2,730.00
3. Coordinate closely with the City, homeowners, demolition contractor, closing agency, throughout the life of the project	4	36	0	4	36	80	$10,980.00
4. Prepare and submit Quarterly Reports to FDEM, as required by the grant agreement	0	18	0	0	9	27	$4,095.00
5. Coordinate with City staff regarding paid invoices, cancelled checks and supporting financial documentation	0	0	4	0	4	8	$940.00
6. Prepare and submit Reimbursement Requests to FDEM	0	0	8	0	16	24	$2,560.00
7. Coordinate with FDEM staff, as needed, during the life of the project	4	12	0	0	6	22	$3,510.00
8. Prepare a final deliverables package for submittal to FDEM	0	8	0	2	12	22	$2,740.00
9. Prepare for and conduct final field inspections to corroborate the final land use of the project sites	8	8	0	0	0	16	$3,040.00
10. Submit all Work Products electronically to the City of Port Orange and FDEM	0	0	2	0	2	4	$470.00
11. Project Administration (Review all Work Products)	16	4	0	0	8	28	$4,540.00
TASK HOURS	32	102	14	6	99	253	
TASK LABOR COSTS	$6,240.00	$18,870.00	$2,100.00	$720.00	$8,415.00	$36,345.00	$36,345.00
PERCENT BREAKDOWN	17.2%	51.9%	5.8%	2.0%	23.2%	100.0%	

Breakdown in Fees

(1) Labor Costs	=	$36,345.00
(2) Reimbursable Expenses	=	$155.00
TOTAL FEE	=	**$36,500.00**

Pegasus ENGINEERING

May 12, 2025 P-229928

Ms. Margaret Tomlinson, RLA, LEED AP
Construction & Engineering Manager
Community Development
City of Port Orange
1000 City Center Circle
Port Orange, Florida 32129

Re: Acquisition and Demolition of 3 Flood-Prone Homes as part of the Hazard Mitigation Grant Program under Hurricane Idalia Project No. 4734-002-R

Subj: Project Management / Grant Administration Support Services

Dear Ms. Tomlinson:

Pegasus Engineering LLC is pleased to submit this proposal for Project Management / Grant Administration Support Services for the Acquisition and Demolition of 3 Flood-Prone Homes project that involves the following properties:

- 798 Sugar House Drive, Port Orange, FL 32129 (Joan Burnette)
- 893 Sugar House Drive, Port Orange, FL 32129 (Chloe Howard)
- 5899 Trailwood Drive, Port Orange, FL 32127 (Myron Stipanovic and Shirley Madden)

The scope of work for this project includes the acquisition and demolition of the above-referenced property to permanently eliminate the risk of future flood damage and prevent health and safety risks for the homeowners. Upfront work includes demolition permitting, boundary surveying services, appraisal services, closing services (i.e., title search, mortgage release), and demolition work. Removing debris, abandoning any wells and/or septic tanks (if applicable), and disconnecting all utilities will follow demolition. The properties will be converted to open space and deed-restricted in perpetuity, in accordance with FEMA program requirements pursuant to 44 CFR 206.434 (e).

This proposal incorporates the following project management/grant administration services related to the Acquisition and Demolition of 3 Flood-Prone Home project:

1. Perform a technical review of the grant agreement issued by FDEM, identify the project-specific HMGP grant requirements that the City must comply with and coordinate with City staff regarding Pegasus' review comments that will require revisions to the draft grant agreement for further coordination with FDEM.

2. Coordinate with the City regarding compliance with the Federal procurement standards in 2 C.F.R. §§200.318 through 200.327 and required contract provisions in Appendix II to 2 C.F.R. Part 200, as professional services needed for the implementation of the project are secured.

3. Coordinate closely with the City, homeowners, demolition contractor, closing agency, and others as needed and throughout the life of the project.

4. Prepare and submit Quarterly Reports to FDEM, as required by the grant agreement.

5. Coordinate with City staff regarding paid invoices, cancelled checks and supporting financial documentation.

6. Prepare and submit Reimbursement Requests to FDEM.

7. Coordinate with FDEM staff, as needed, during the life of the project.

8. Collect the Final Deliverables, perform a technical review of the documentation and prepare a final deliverables package for submittal to FDEM.

9. Prepare for and conduct final field inspections to corroborate the final land use of the project sites.

10. Submit all Work Products electronically to the City of Port Orange and FDEM.

The above-described services will be performed for an hourly not-to-exceed fee amount of **$36,500.00**. Reimbursable expenses, such as courier, tolls, mileage, photocopies, plotting, and exhibits incurred in connection with the above-described work will be included in the above quoted fee. If you have any questions, please contact me directly at 407-992-9160, extension 309, or by email at david@pegasusengineering.net.

Sincerely,

PEGASUS ENGINEERING, LLC

David W. Hamstra, P.E.
Principal / Project Manager

cc: Valerie Duhl, City of Port Orange
Leylah Saavedra, Pegasus Engineering, LLC

Acquisition and Demolition of 3 Flood-Prone Homes
as part of the Hazard Mitigation Grant Program under Hurricane Idalia
Project No. 4734-002-R

Project Management / Grant Administration Support Services

Approved for Pegasus Engineering, LLC

Juan Fong, P.E.	Principal Officer's Title	May 12, 2025 Date

This proposal is hereby accepted and authorization to proceed is hereby given.
(Please return one executed copy of this proposal for our Pegasus Engineering records).

Authorized Signature	Officer's Title	Date

Manhour and Fee Estimate
for the

Acquisition and Demolition of 3 Flood-Prone Homes (Project No. 4734-002-R)
Project Management / Grant Administration Support Services

Task Description (Current Hourly Rate)	Project Manager (Hamstra, P.E.) $195.00	Sr. Project Engineer (Saavedra, P.E.) $185.00	Project Engineer (Whikehart, P.E.) $150.00	CADD Technician (Greenough) $120.00	Administrative Assistant (Staff) $85.00	Task Hours	Task Fees
1. Perform a technical review of the grant agreement issued by FDEM and provided review comments, if needed	0	4	0	0	0	4	$740.00
2. Coordinate with the City regarding compliance with 2 C.F.R. §§200 as the required professional services are secured	0	12	0	0	6	18	$2,730.00
3. Coordinate closely with the City, homeowners, demolition contractor, closing agency, throughout the life of the project	4	36	0	4	36	80	$10,980.00
4. Prepare and submit Quarterly Reports to FDEM, as required by the grant agreement	0	18	0	0	9	27	$4,095.00
5. Coordinate with City staff regarding paid invoices, cancelled checks and supporting financial documentation	0	0	4	0	4	8	$940.00
6. Prepare and submit Reimbursement Requests to FDEM	0	0	8	0	16	24	$2,560.00
7. Coordinate with FDEM staff, as needed, during the life of the project	4	12	0	0	6	22	$3,510.00
8. Prepare a final deliverables package for submittal to FDEM	0	8	0	2	12	22	$2,740.00
9. Prepare for and conduct final field inspections to corroborate the final land use of the project sites	8	8	0	0	0	16	$3,040.00
10. Submit all Work Products electronically to the City of Port Orange and FDEM	0	0	2	0	2	4	$470.00
11. Project Administration (Review all Work Products)	16	4	0	0	8	28	$4,540.00
TASK HOURS	32	102	14	6	99	253	
TASK LABOR COSTS	$6,240.00	$18,870.00	$2,100.00	$720.00	$8,415.00	$36,345.00	$36,345.00
PERCENT BREAKDOWN	17.2%	51.9%	5.8%	2.0%	23.2%	100.0%	

Breakdown in Fees

(1) Labor Costs	=	$36,345.00
(2) Reimbursable Expenses	=	$155.00
TOTAL FEE	=	**$36,500.00**

LOCATION OF PROPERTIES TO BE ACQUIRED

Address 893 Sugar House Dr.
Parcel 633708020480
Size 0.23 AC

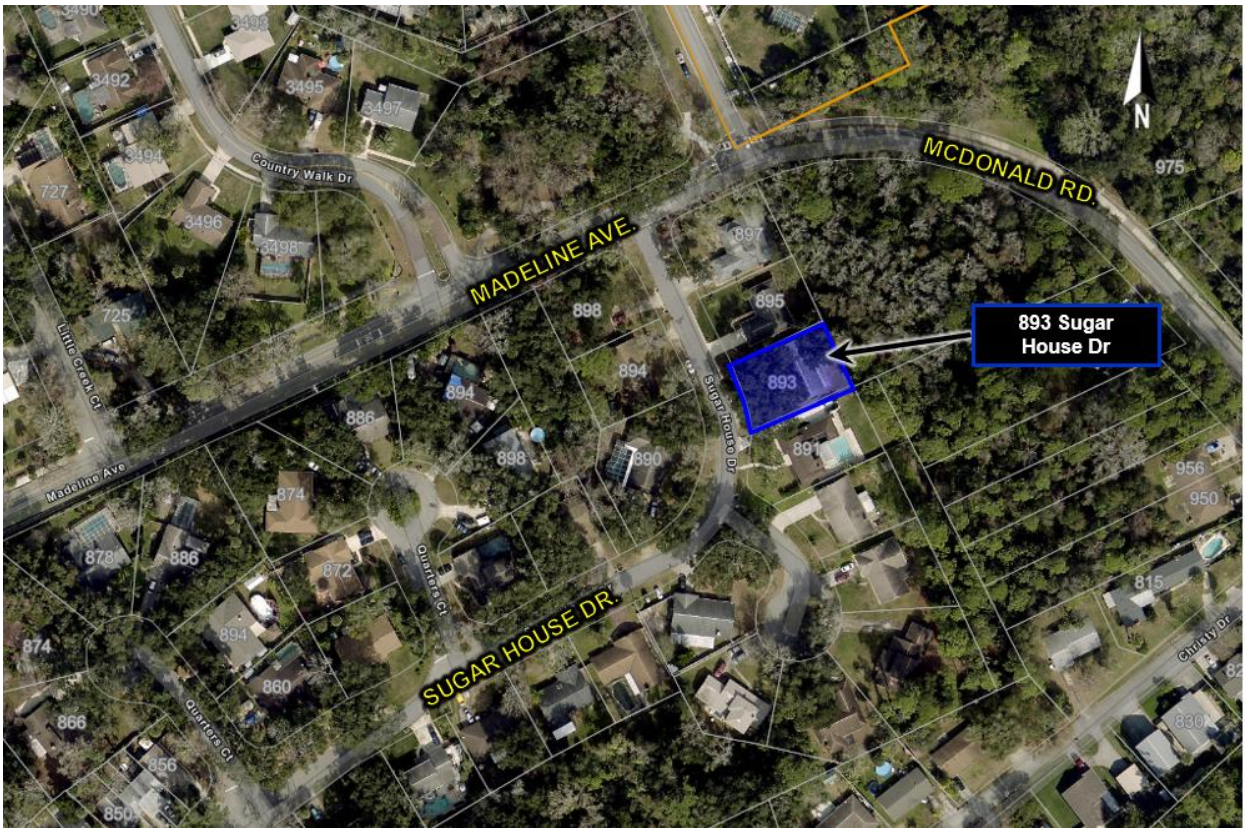

Address 798 Sugar House Dr.
Parcel 633708030760
Size 0.20 AC



LOCATION OF PROPERTIES TO BE ACQUIRED

Address	5899 Trailwood Dr.
Parcel	632202000080
Size	2.06 AC



CITY COUNCIL AGENDA ITEM

COUNCIL MEETING DATE 8/19/2025

SUBJECT: (B6b) Award of ITB #25-13 to Masci General Contractor, Inc. for Construction of the St. John's River to Sea (SJR2C) Loop Shared-Use Nonmotorized (SUN) Trail (FDOT #439865)

DEPARTMENT: Community Development

GOAL: 1 - Public Safety
2 - Infrastructure
3 - Quality of Life
4 - Economic Development

RECOMMENDED MOTION: Move to approve the award of ITB #25-13 to Masci General Contractor, Inc., for construction of the SJR2C Loop Trail for an amount not to exceed $1,633,861.65 and authorize an allowance for unforeseen conditions (Contingency) for an amount not to exceed $80,000; and authorize the Mayor and City Clerk to execute the associated documents.

SUMMARY: The Community Development Department is requesting City Council approval to award ITB #25-13 for the construction of the Port Orange segment of the St. John's River to Sea (SJR2C) Loop Shared-Use Nonmotorized (SUN) Trail (FDOT #439865) to Masci General Contractor, Inc., for the amount of $1,633,861.65. In addition, staff is requesting the City Council authorize an allowance for unforeseen conditions up to $80,000 (Contingency).

The SJR2C Loop SUN Trail is a 260-mile regional trail system that runs through five Florida counties (Putnam, St. Johns, Volusia, Brevard, and Flagler) and includes the entire Palatka-to-St. Augustine State Trail and is part of the 3,000-mile East Coast Greenway. According to the Volusia Flagler Transportation Planning Organization's adopted 2025 List of Priority Projects, similar SJR2C Loop Trail segments are programmed in Edgewater, New Smyrna Beach, and South Daytona.

The segment of the SJR2C Loop SUN Trail in Port Orange between New Smyrna Beach and South Daytona is located along McDonald Road, Spruce Creek Road, Nova Road, and Ridgewood Avenue and consists of existing trail or sidewalk segments along McDonald Road between South Daytona and Herbert Street, Spruce Creek Road, and Nova Road, between Spruce Creek Road and Ridgewood Avenue (See Exhibit A).

As part of this project, trail segments to fill gaps along the trail route will be constructed. The following improvements or trail segments will be constructed as part of this project to complete the SJR2C Loop SUN Trail through Port Orange, between New Smyrna

Beach and South Daytona:

- Two midblock crossings at the intersection of Spruce Creek Road and Selin Circle and the intersection of Spruce Creek Road and Oak Street, and Rectangular Rapid Flashing Beacon (RRFB) signals, lighting, and roadway markings will be installed
- At the intersection of Spruce Creek Road and Dunlawton Avenue, the concrete crosswalk landing on the north side will be improved, and a new pedestrian pole with an LED pedestrian countdown display to cross Dunlawton Avenue will be installed.
- +/- 986 linear feet of 12-foot-wide heavy-duty asphalt trail along the east side of Spruce Creek Road between Dunlawton Avenue and Canal View Boulevard, along with drainage improvements and a stormwater inline check valve at the Halifax Canal.
- +/- 715 linear feet of 8-foot-wide elevated timber boardwalk between Canal View Boulevard and Herbert Street, through a vacant City-owned parcel
- +/- 120 linear feet of 8-foot-wide concrete sidewalk between the end of the timber boardwalk and the intersection of Herbert Street and 6th Street and a crosswalk at the intersection of Herbert Street at 6th Street, along with a Rectangular Rapid Flashing Beacon (RRFB) signal and lighting.

On September 18, 2024, as part of the FY 25 Capital Improvements Program (CIP), the City approved the funds for constructing this project. At their May 6, 2025 meeting, the City Council approved the execution of the FDOT Funding Agreement and the FDOT Maintenance Agreement that, upon completion, maintenance of the constructed improvements associated with this project will be the City's responsibility. According to the executed FDOT Funding Agreement, FDOT will fund 100% of the eligible construction costs and City will fund non-eligible items.

The project was solicited for bid (ITB #25-13) to contractors pre-qualified by FDOT in the areas of sidewalk and flexible pavement work. On July 2, 2025, the Purchasing Manager received five (5) sealed bid responses; one (1) was deemed nonresponsive.

Masci General Contractor, Inc.	$1,633,861.65
Carr & Collier, Inc.	$1,816,700.00
All State General Const., Inc.	Non-Responsive
GPS Civil Contractor, Inc.	$1,968,827.00
Cathcart Construction Company	$2,410,509.00

Staff has reviewed the bid responses and approved Masci General Contractor, Inc. as the lowest responsive, responsible bidder designated by FDOT as being qualified for the project.

According to the executed FDOT Funding Agreement, FDOT will fund 100% of the eligible construction and construction and engineering inspection (CEI) costs and the City will be responsible to fund the non-eligible items. FDOT funding for this project is a total amount not to exceed $3,039,750.00. At their May 20, 2025, meeting, the City Council approved Kimley-Horn to perform the CEI services for a fee of $411,925.00. The non-eligible items identified during the design of the project that the city will fund include the following:

- $7,508.25 to upgrade the segment of asphalt trail between Dunlawton Avenue and Canal View Boulevard from standard asphalt to heavy-duty asphalt as City, County & FPL trucks routinely traverse this area to complete maintenance tasks.
- $27,635.54 to install an inline check valve where a city stormwater pipe intersects with the Halifax Canal.

Construction is anticipated to begin in the Fall of 2025 and be completed within 270 days after the Notice to Proceed is issued.

PRESENTER: Tim Burman

ATTACHMENTS:

1.	MASCI General Contractor, Inc. EJCDC Agreement - ITB 25-13 Trail Loop - Complete Document	MASCI General Contractor, Inc. EJCDC Agreement - ITB 25-13 Trail Loop - Complete Document.pdf
2.	ITB #25-13 Bid Tabulation	ITB #25-13 Bid Tabulation.xlsx
3.	ITB 25-13 NOTICE OF INTENT TO AWARD	ITB 25-13 NOTICE OF INTENT TO AWARD.pdf
4.	Exhibit A - Map of PO Segment of Trail	Exhibit A - Map of PO Segment of Trail.docx
5.	ITB 25-13 439865-3-54-01 SJR2C Loop Trail Final 5.19.25	ITB 25-13 439865-3-54-01 SJR2C Loop Trail Final 5.19.25.pdf
6.	ITB 25-13 439865-3-54-01 SJR2C Loop Trail Addendum 1	ITB 25-13 439865-3-54-01 SJR2C Loop Trail Addendum 1.pdf
7.	ITB 25-13 439865-3-54-01 SJR2C Loop Trail Addendum 2	ITB 25-13 439865-3-54-01 SJR2C Loop Trail Addendum 2.pdf
8.	SJR2C Loop Trail (Spruce Creek Rd.) Plans	SJR2C Loop Trail (Spruce Creek Rd.) Plans.pdf
9.	SJR2C Loop Trail (Spruce Creek Rd.) Lighting Plans	SJR2C Loop Trail (Spruce Creek Rd.) Lighting Plans.pdf
10.	Timber Boardwalk Structural Design Calculations	Timber Boardwalk Structural Design Calculations.pdf
11.	Masci GC Bonding Letter- City of Port Orange-Loop Trail 7 3 25	Masci GC Bonding Letter- City of Port Orange-Loop Trail 7 3 25.pdf
12.	Jill's E-Mail Re Change to Unit Pring - Bid Tab Notice of Intent	Jill's E-Mail Re Change to Unit Pring - Bid Tab Notice of Intent.pdf
13.	MASCI Proposal - Loop Trail, Port Orange	MASCI Proposal - Loop Trail, Port Orange.pdf

Lisa Epstein	Created/Initiated - 07/16/2025
Tim Burman	Approved - 08/01/2025
Linda Truitt	Approved - 08/04/2025
Shannon Balmer	Approved - 08/12/2025
Wayne Clark	Final Approval - 08/12/2025

AGREEMENT BETWEEN OWNER AND CONTRACTOR FOR CONSTRUCTION CONTRACT (STIPULATED PRICE)

This Agreement is by and between **City of Port Orange, 1000 City Center Circle, Port Orange, Florida 32129** ("Owner") and **Masci General Contractor, Inc., 5752 South Ridgewood Avenue, Port Orange, Florida 32127** ("Contractor").

Terms used in this Agreement have the meanings stated in the General Conditions and the Supplementary Conditions.

Owner and Contractor hereby agree as follows:

ARTICLE 1—WORK

1.01 Contractor shall complete all Work as specified or indicated in the Contract Documents. The Work is generally described as follows:

Florida Department of Transportation ("FDOT" and/or "Department") State-Funded Grant Project participation in the SJR2C (St Johns River to Sea) Loop Trail (Spruce Creek Road) from South of Selin Circle to Herbert Street project.

ARTICLE 2—THE PROJECT

2.01 The Project, of which the Work under the Contract Documents is a part, is generally described as follows:

ITB 25-13 - 4398653-2-54-01 SJR2C Loop Trail (Spruce Creek Rd.) From S. of Selin Circle to Herbert Street ("Project").

ARTICLE 3—ENGINEER

3.01 The Project has been designed by the Design Professional specified and Engineer shall serve as Owner's agent for purposes of approving Contractor's payment requests, and as otherwise provided in the Contract documents.

A. The part of the project that pertains to the Work has been designed by Merlynn Anderson, P.E. ("Design Professional of Record") of Stanley Consultants.

B. The Owner has retained **KIMLEY-HORN AND ASSOCIATES, INC.** ("Engineer"), a North Carolina corporation, to act as Owner's representative, assume all duties and responsibilities, and have the rights and

Copyright© 2018 National Society of Professional Engineers, American Council of Engineering Companies, and American Society of Civil Engineers. All rights reserved.

authority assigned to Engineer in the Contract Documents in connection with the completion of the Work in accordance with the Contract Documents.

ARTICLE 4—CONTRACT TIMES

4.01 *Time is of the Essence*

A. All time limits for Milestones, if any, Substantial Completion, and completion and readiness for final payment as stated in the Contract Documents are of the essence of the Contract.

4.02 *Contract Times: Dates*

A. Deleted in its entirety.

4.03 *Contract Times: Days*

A. The Work will be substantially complete within **246** days after the date when the Contract Times commence to run as provided in Paragraph 4.01 of the General Conditions, and completed and ready for final payment in accordance with Paragraph 15.06 of the General Conditions.

B. Unless otherwise modified in a Notice to Proceed issued after the Effective Date of the Agreement or an allowable extension of time in accordance with Paragraph 4.01 of the General Conditions, the work shall be finally completed in accordance with Paragraph 15.06 of the General Conditions **270** days from the Notice to Proceed.

4.04 *Milestones* – Deleted in its entirety.

4.05 *Liquidated Damages*

A. Contractor and Owner recognize that time is of the essence as stated in Paragraph 4.01 above and that Owner will suffer financial and other losses if the Work is not completed and Milestones not achieved within the Contract Times, as duly modified. The parties also recognize the delays, expense, and difficulties involved in proving, in a legal or arbitration proceeding, the actual loss suffered by Owner if the Work is not completed on time. Accordingly, instead of requiring any such proof, Owner and Contractor agree that as liquidated damages for delay (but not as a penalty):

1. *Substantial Completion:* Contractor shall pay Owner $0.00 for each day that expires after the time (as duly adjusted pursuant to the Contract) specified above for Substantial Completion, until the Work is substantially complete.

2. *Completion of Remaining Work:* After Substantial Completion, if Contractor shall neglect, refuse, or fail to complete the remaining Work within the Contract Times (as duly adjusted pursuant to the Contract) for completion and readiness for final payment, Contractor shall pay Owner $0.00 for each day that expires after such time until the Work is completed and ready for final payment.

3. Deleted in its entirety.

B. If Owner recovers liquidated damages for a delay in completion by Contractor, then such liquidated damages are Owner's sole and exclusive remedy for such delay, and Owner is precluded from recovering any other damages, whether actual, direct, excess, or consequential, for such delay, except for special damages (if any) specified in this Agreement.

Copyright© 2018 National Society of Professional Engineers, American Council of Engineering Companies, and American Society of Civil Engineers. All rights reserved.

C. Deleted in its entirety.

4.06 *Special Damages* - Deleted in its entirety.

A. Deleted in its entirety.

B. Deleted in its entirety.

C. Deleted in its entirety.

ARTICLE 5—CONTRACT PRICE

5.01 Owner shall pay Contractor for completion of the Work in accordance with the Contract Documents, the amounts that follow, subject to adjustment under the Contract:

A. Deleted in its entirety.

B. For all Unit Price Work in accordance with Paragraph 13.03 of the General Conditions, an amount equal to the sum of the established unit price for each separately identified item of Unit Price Work times the actual quantity of that item:

Unit Price Work					
Item No.	**Description**	**Unit**	**Estimated Quantity**	**Unit Price**	**Extended Price**
See Exhibit No. 1 Contractor's Bid Schedule/Schedule of Unit Pricing.* *Due to error in rounding, the "Grand Total of All Items" on Contractor's Bid Schedule has been corrected on the City of Port Orange's Bid Tabulation, for a corrected amount of $1,633,861.65.					
Total of all Extended Prices for Unit Price Work (subject to final adjustment based on actual quantities)					$1,633,861.65*

The Bid Unit Prices set forth above are guaranteed prices. Although the Estimated Quantities are estimates and may increase or decrease based on determinations of Engineer, Contractor agrees and understands that the Bid Unit Prices shall remain the same irrespective of the quantities. Contractor understands that in agreeing to any Bid Unit Price it is agreeing to bear the risk associated with any material price increase of escalation. Owner agrees and understands that in agreeing to any Bid Unit Price it is agreeing to bear the risk associated with any material price decrease or reduction.

C. Deleted in its entirety.

D. For all Work, at the prices stated in Contractor's Bid Schedule, attached hereto as an exhibit.

ARTICLE 6—PAYMENT PROCEDURES

6.01 *Submittal and Processing of Payments*

A. Contractor shall submit Applications for Payment in accordance with Article 15 of the General Conditions. Applications for Payment will be processed by Engineer as provided in the General Conditions.

Copyright© 2018 National Society of Professional Engineers, American Council of Engineering Companies, and American Society of Civil Engineers. All rights reserved.

6.02 *Progress Payments; Retainage*

A. Owner shall make progress payments on the basis of Contractor's Applications for Payment on or about the **15th** day of each month during performance of the Work as provided in Paragraph 6.02.A.1 below, provided that such Applications for Payment have been submitted in a timely manner and otherwise meet the requirements of the Contract. All such payments will be measured by the Schedule of Values established as provided in the General Conditions (and in the case of Unit Price Work based on the number of units completed) or, in the event there is no Schedule of Values, as provided elsewhere in the Contract.

1. Prior to Substantial Completion, progress payments will be made in an amount equal to the percentage indicated below but, in each case, less the aggregate of payments previously made and less such amounts as Owner may withhold, including but not limited to liquidated damages, in accordance with the Contract.

a. **95%** percent of the value of the Work completed (with the balance being retainage).

1) Deleted in its entirety.

b. Deleted in its entirety.

B. Owner shall withhold Five percent (5%) of each progress payment as retainage.

6.03 *Final Payment*

A. Upon final completion and acceptance of the Work, Owner shall pay the remainder of the Contract Price in accordance with Paragraph 15.06 of the General Conditions.

6.04 *Consent of Surety*

A. Owner will not make final payment, or return or release retainage at Substantial Completion or any other time, unless Contractor submits written consent of the surety to such payment, return, or release.

6.05 *Interest* Deleted in its entirety.

A. Deleted in its entirety.

ARTICLE 7—CONTRACT DOCUMENTS

7.01 *Contents*

A. The Contract Documents consist of all of the following:

1. This Agreement (pages 1 to 12, inclusive).

2. Bonds:

a. Combination Payment and Performance bond, together with power of attorney, (pages 1 to 4, inclusive).

3. General Conditions (pages 1 to 74, inclusive).

4. Deleted in its entirety.

5. PLANS - SJR2C Loop Trail (Spruce Creek Rd) from South of Selin Circle to Herbert Street, on file with Margaret Tomlinson, Construction and Engineering Manager (pages 1 to 63, inclusive).

Copyright© 2018 National Society of Professional Engineers, American Council of Engineering Companies, and American Society of Civil Engineers. All rights reserved.

6. Timber Boardwalk Structural Design Calculations, on file with Margaret Tomlinson, Construction and Engineering Manager (pages 1 to 63, inclusive).
7. Lighting Plans, on file with Margaret Tomlinson, Construction and Engineering Manager (pages 1 to 10, inclusive).
8. Addendum No. 1, dated June 2, 2025 (page 1, inclusive).
9. Addendum No. 2, dated June 20, 2025 (pages 1 to 7, inclusive).
10. Exhibits to this Agreement (enumerated as follows):
    a. Exhibit No. 1 Contractor's Bid Schedule/Schedule of Unit Pricing (pages 1 to 2, inclusive)
       * See notes on Page 3 of EJCDC Agreement, Article 5, Subsection 5.01(B).
    b. Exhibit No. 2 Contractor's Proposal, on file with City of Port Orange Purchasing Department (pages 1 to 66, inclusive).
    c. Exhibit No. 3 Composite Exhibit No. 3 City's ITB # 25-13 439865-3-54-01 SJR2C Loop Trail (Spruce Creek Rd.) from South of Selin Circle to Herbert Street (pages 1 to 183, not attached, on file with office of the City Clerk).
11. The following which may be delivered or issued on or after the Effective Date of the Contract and are not attached hereto:
    a. Notice to Proceed.
    b. Work Change Directives.
    c. Change Orders.
    d. Field Orders.
    e. Warranty Bond, if any.

B. The Contract Documents listed in Paragraph 7.01.A are attached to this Agreement (except as expressly noted otherwise above).

C. There are no Contract Documents other than those listed above in this Article 7.

D. The Contract Documents may only be amended, modified, or supplemented as provided in the Contract.

ARTICLE 8—REPRESENTATIONS, CERTIFICATIONS, AND STIPULATIONS

8.01 *Contractor's Representations*

A. In order to induce Owner to enter into this Contract, Contractor makes the following representations:

1. Contractor has examined and carefully studied the Contract Documents, including Addenda.
2. Contractor has visited the Site, conducted a thorough visual examination of the Site and adjacent areas, and become familiar with the general, local, and Site conditions that may affect cost, progress, and performance of the Work.

Copyright© 2018 National Society of Professional Engineers, American Council of Engineering Companies, and American Society of Civil Engineers. All rights reserved.

3. Contractor is familiar with all Laws and Regulations that may affect cost, progress, and performance of the Work.

4. Contractor has carefully studied the reports of explorations and tests of subsurface conditions at or adjacent to the Site and the drawings of physical conditions relating to existing surface or subsurface structures at the Site that have been identified in the Supplementary Conditions, with respect to the Technical Data in such reports and drawings.

5. Contractor has carefully studied the reports and drawings relating to Hazardous Environmental Conditions, if any, at or adjacent to the Site that have been identified in the Supplementary Conditions, with respect to Technical Data in such reports and drawings.

6. Contractor has considered the information known to Contractor itself; information commonly known to contractors doing business in the locality of the Site; information and observations obtained from visits to the Site; the Contract Documents; and the Technical Data identified in the Supplementary Conditions or by definition, with respect to the effect of such information, observations, and Technical Data on (a) the cost, progress, and performance of the Work; (b) the means, methods, techniques, sequences, and procedures of construction to be employed by Contractor; and (c) Contractor's safety precautions and programs.

7. Based on the information and observations referred to in the preceding paragraph, Contractor agrees that no further examinations, investigations, explorations, tests, studies, or data are necessary for the performance of the Work at the Contract Price, within the Contract Times, and in accordance with the other terms and conditions of the Contract.

8. Contractor is aware of the general nature of work to be performed by Owner and others at the Site that relates to the Work as indicated in the Contract Documents.

9. Contractor has given Engineer written notice of all conflicts, errors, ambiguities, or discrepancies that Contractor has discovered in the Contract Documents, and of discrepancies between Site conditions and the Contract Documents, and the written resolution thereof by Engineer is acceptable to Contractor.

10. The Contract Documents are generally sufficient to indicate and convey understanding of all terms and conditions for performance and furnishing of the Work.

11. Contractor's entry into this Contract constitutes an incontrovertible representation by Contractor that without exception all prices in the Agreement are premised upon performing and furnishing the Work required by the Contract Documents.

8.02 *Contractor's Certifications*

A. Contractor certifies that it has not engaged in corrupt, fraudulent, collusive, or coercive practices in competing for or in executing the Contract. For the purposes of this Paragraph 8.02:

1. "corrupt practice" means the offering, giving, receiving, or soliciting of anything of value likely to influence the action of a public official in the bidding process or in the Contract execution;

Copyright© 2018 National Society of Professional Engineers, American Council of Engineering Companies, and American Society of Civil Engineers. All rights reserved.

2. "fraudulent practice" means an intentional misrepresentation of facts made (a) to influence the bidding process or the execution of the Contract to the detriment of Owner, (b) to establish Bid or Contract prices at artificial non-competitive levels, or (c) to deprive Owner of the benefits of free and open competition;

3. "collusive practice" means a scheme or arrangement between two or more Bidders, with or without the knowledge of Owner, a purpose of which is to establish Bid prices at artificial, non-competitive levels; and

4. "coercive practice" means harming or threatening to harm, directly or indirectly, persons or their property to influence their participation in the bidding process or affect the execution of the Contract.

8.03 *Standard General Conditions*

A. Owner stipulates that if the General Conditions that are made a part of this Contract are EJCDC® C-700, Standard General Conditions for the Construction Contract (2018), published by the Engineers Joint Contract Documents Committee, and if Owner is the party that has furnished said General Conditions, then Owner has plainly shown all modifications to the standard wording of such published document to the Contractor, through a process such as highlighting or "track changes" (redline/strikeout), or in the Supplementary Conditions.

B. Any reference to Supplementary Conditions throughout this document, the C-520 Agreement between Owner and Contractor for Construction Contract (2018), and the EJCDC® C-700, Standard General Conditions for the Construction Contract (2018), are hereby deleted in their entirety.

ARTICLE 9—MISCELLANEOUS

9.01 *Assignment of Contract*

A. No assignment by a party hereto of any rights under or interests in the Contract will be binding on another party hereto without the written consent of the party sought to be bound; and, specifically but without limitation, moneys that may become due and moneys that are due may not be assigned without such consent (except to the extent that the effect of this restriction may be limited by law), and unless specifically stated to the contrary in any written consent to an assignment, no assignment will release or discharge the assignor from any duty or responsibility under the Contract Documents.

9.02 *Successors and Assigns*

Owner and Contractor each binds itself, its partners, successors, assigns, and legal representatives to the other party hereto, its partners, successors, assigns, and legal representatives in respect to all covenants, agreements, and obligations contained in the Contract Documents.

9.03 *Severability*

Any provisions or part of the Contract Documents held to be void or unenforceable under any Law or Regulation shall be deemed stricken, and all remaining provisions and parts shall continue to be valid and binding upon Owner and Contractor, who agree that the Contract Documents shall be reformed to replace such stricken provision or part thereof with a valid and enforceable

Copyright© 2018 National Society of Professional Engineers, American Council of Engineering Companies, and American Society of Civil Engineers. All rights reserved.

provision or part that comes as close as possible to expressing the intention of the stricken provision.

9.04 *No-Damage-for-Delay*

Contractor shall not be entitled to any damages (including, without limitation, expenses, costs, fees, extended field overhead and general conditions, equipment costs, home office overhead, lost productivity and inefficiency damages, additional payroll and labor costs, etc.) for any delay to its Work. Contractor's sole and exclusive remedy for a delay to its Work that is not caused by Contractor (or a person or entity performing a portion of Contractor's scope of Work) shall be an extension of time to substantially complete and finally complete the Project; provided, however, that Owner granting Contractor an extension of time is not a condition precedent to this no-damage-for-delay provision. Contractor shall also not be entitled to any damages for disruption or interference to its Work or for having to accelerate or incur additional labor or payroll costs in order to make up or overcome a delay to its Work so that it can maintain the dates for Substantial Completion and Final Completion. Contractor agrees that in determining and agreeing to the Contract Price it is considered this no-damage-for-delay provision and understands that it is not entitled to any damages whatsoever for a delay to its Work.

9.05 *No intended Third-Party Beneficiaries*

There are no intended third-party beneficiaries to the Contract.

9.06 *Public Record Compliance*

Contractor shall comply with public records laws as set forth in Section 119, Florida Statutes, and shall specifically: (a) keep and maintain public records that ordinarily and necessarily would be required by the City in order to perform the service; (b) provide the public with access to public records on the same terms and conditions that the City would provide the records at a cost that does not exceed the cost provided in Section 119, Florida Statutes, or as otherwise provided by law; (c) ensure that public records that are exempt or confidential and exempt from public records disclosure requirements are not disclosed except as authorized by law; and (d) meet all requirements for retaining public records and transfer to the City, at no cost, all public records in possession of the Contractor upon termination of the Contract and destroy any duplicate public records that are exempt or confidential and exempt from public records disclosure requirements. All records stored electronically must be provided to the City in a format that is compatible with the information technology systems of the City.

9.07 *Records*

The design, permits and all other records prepared by the Contractor, assembled for the City, subcontracted for the City, and any other records related to the scope of work in the possession of the Contractor shall be retained by the Contractor for the requisite time set forth in Florida Administration Code Rule 1 b-24.

http://dos.myflorida.com/library-archives/records-management/. Contractor may dispose of the records in accordance with Florida law, upon receipt of a signed written release signed by the City Attorney. Contractor agrees to indemnify the City for failure to comply with the requirements of this paragraph including costs of litigation and legal fees incurred through all appeals. City reserves the right to select and approve the defense attorney.

Copyright© 2018 National Society of Professional Engineers, American Council of Engineering Companies, and American Society of Civil Engineers. All rights reserved.

9.08 *Force Majure*

Neither party shall be liable for any delay in performance or failure to perform any obligation hereunder if, and to the extent that, such failure or delay is caused by an event of Force Majeure. Force Majeure shall mean any act, event or condition that is beyond the party's reasonable control, that materially and adversely affects the party's ability to perform its obligations hereunder, and that is not the result of the party's willful neglect, error, omission or failure to exercise reasonable due diligence.

9.09 *Contract construction*

This Contract may be executed in one or more counterparts, each of which shall be deemed an original but all of which together constitute one and the same instrument. The delivery by facsimile or e-mail of an executed copy of this Contract shall be deemed valid as if an original signature was delivered. No contract shall be formed between the Contractor and the City until both Parties have signed this Contract.

9.10 *Financial Disclosures*

During the term of this Contract, Contractor covenants and agrees that it will keep adequate books and records of accounts in accordance with Generally Accepted Accounting Principals (GAAP). Contractor further covenants and agrees that in the event the Contractor becomes insolvent and/or fails to pay its current obligations when they become due, Contractor shall so advise Owner of such situation and, upon request from the Owner, Contractor shall provide to Owner financial statements of Contractor, including current income and expense statements of Contractor, consolidated balance sheets signed by a financial officer of Contractor, and audited reports provided by Contractor to Contractor's Surety, audited financial statements certified by a Certified Public Accountant concerning the financial affairs of the Contractor and all affiliates of Contractor, and such other financial information requested by Owner. All such financial information shall comply with GAAP.

In the event that Contractor becomes insolvent and/or fails to pay its obligations when they become due, Contractor hereby authorized its sureties, lenders, financial institutions and other third parties to release Owner financial information requested by Owner, including, but not limited to, the financial information described in the preceding paragraph.

9.11 *Waiver of Jury Trial*

All parties hereby waive any and all right to any trial by jury in any action or proceeding arising directly or indirectly hereunder.

9.12 *Insurance Requirements*

If the recipient elects to self-perform the Project, and such self-performance is approved by the Department in accordance with the terms of this Agreement, the Recipient may self-insure and proof of self-insurance shall be provided to the Department. If the Recipient elects to hire a contractor or consultant to perform the Project, then the Recipient shall, or cause its contractor

Copyright© 2018 National Society of Professional Engineers, American Council of Engineering Companies, and American Society of Civil Engineers. All rights reserved.

or consultant to carry Commercial General Liability insurance providing continuous coverage for all work or operations performed under the Agreement. Such insurance shall be no more restrictive than that provided by the latest occurrence from edition of the standard Commercial General Liability Form (ISO Form CG 00 01) as filed for use in the State of Florida. Recipient shall, or cause its contractor to cause the Department to be made an Additional Insured as to such insurance. Such coverage shall be on an "Occurrence" basis and shall include Products/Completed Operations coverage. The coverage afforded to the Department as an Additional Insured shall be primary as to any other available insurance and shall not be more restrictive than the coverage afforded to the Named Insured. The limits of coverage shall not be less than $1,000,000 for each occurrence and not less than $5,000,000 annual general aggregate, inclusive of amounts provided by an umbrella or excess policy. The limits of coverage described herein shall apply fully to the work or operations performed under the Agreement, and may not be shared with or dismissed by claims unrelated to the Agreement. The policy/ies and coverage described herein may be subject to a deductible and such deductibles shall be paid by the Named Insured. No policy/ies or coverage described herein may contain or be subject to a Retention or a Self-Insured Retention unless the Recipient is a state agency or subdivision of the State of Florida that elects to self-perform the Project. Prior to the execution of the Agreement, and at all renewal periods which occur prior to final acceptance of the work, the Department shall be provided with an ACORD Certificate of Liability Insurance reflecting the coverage described herein. The Department shall be notified in writing within ten days of any cancellation, lapse, renewal, or proposed change to any policy or coverage described herein. The Department's approval or failure to disapprove any policy/ies, coverage, or ACORD Certificates shall not relieve or excuse any obligation to procure and maintain the insurance required herein, nor serve as a waiver of any rights or defenses the Department may have.

9.13 *E-Verify*

Contractor shall utilize the U.S. Department of Homeland Security's E-Verify system to verify the employment eligibility of all new employees hired by the Contractor during the term of this Contract and shall expressly require any sub-contractors performing services pursuant to this Contract to likewise utilize the U.S. Department of Homeland Security's E-Verify system to verify the employment eligibility of all new employees hired by the sub-contractor during the term of this Contract.

9.14 *Indemnity*

To the extent provided by law, Contractor shall indemnify, defend, and hold harmless the City and the State of Florida, Department of Transportation, including the Department's officers, agents, and employees, against any actions, claims, or damages arising out of, relating to, or resulting from negligent or wrongful act(s) of Contractor, or any of its officers, agents, or employees, acting within the scope of their office or employment, in connection with the rights granted to or exercised by Contractor.

The foregoing indemnification shall not constitute a waiver of the Department's or Coty's sovereign immunity beyond the limits set forth in Florida Statutes, Section 768.28. Nor shall the same be construed to constitute agreement by Contractor to indemnify City for the negligent acts or omissions of City, its officers, agents, or employees, or third parties. Nor shall the same be construed to constitute agreement by Contractor to indemnify the Department for the negligent

Copyright© 2018 National Society of Professional Engineers, American Council of Engineering Companies, and American Society of Civil Engineers. All rights reserved.

acts or omissions of the Department, its officers, agents, or employees, or third parties. This indemnification shall survive the termination of this Agreement.

9.15 *Cooperation with Inspector General*

Contractor agrees to comply with Section 20.055(5), Florida Statutes, and to incorporate in all subcontracts the obligation to comply with Section 20.055(5), Florida Statutes.

Copyright© 2018 National Society of Professional Engineers, American Council of Engineering Companies, and American Society of Civil Engineers. All rights reserved.

IN WITNESS WHEREOF, Owner and Contractor have signed this Agreement.

This Agreement will be effective on _____ (which is the Effective Date of the Contract).

Contractor:

Masci General Contractor, Inc.

(typed or printed name of organization)

By: _____

(individual's signature)

Date: _____

(date signed)

Name: Leticia Maria Masci Ferreira

(typed or printed)

Title: Vice President

(typed or printed)

(If company is a corporation, a partnership, or a joint venture, attach evidence of authority to sign.)

Attest: _____

(individual's signature)

Title: _____

(typed or printed)

Address for giving notices:

5752 South Ridgewood Avenue

Port Orange, Florida 32127

Phone: (386) 322-4500

Email: leticiamasci@mascigc.com

License No.: CGC1518864

State: Florida

Copyright© 2018 National Society of Professional Engineers, American Council of Engineering Companies, and American Society of Civil Engineers. All rights reserved.

Owner:

City of Port Orange

(typed or printed name of organization)

By: _____

(individual's signature)

Date: _____

(date signed)

Name: Scott Stiltner

(typed or printed)

Title: Mayor

(typed or printed)

Attest: Robin L. Fenwick, MMC

(individual's signature)

Title: City Clerk

(typed or printed)

Address for giving notices:

1000 City Center Circle

Port Orange, Florida 32129

(386) 506-5500

Copyright© 2018 National Society of Professional Engineers, American Council of Engineering Companies, and American Society of Civil Engineers. All rights reserved.

Payment and Performance Bond

For Completion and Return to City for Recording

Consisting of 4 Pages

FRONT PAGE FOR BOND REQUIRED BY SECTION 255.05, F.S.

PAYMENT AND PERFORMANCE BOND

(Public Works)

Notice and Time Limitations Must Be In Accordance
With Section 255.05(2), (8) and (10), Florida Statutes

BOND NO. _____

PRINCIPAL:

Developer or Contractor:	Masci General Contractor, Inc.
Principal Business Address:	5752 South Ridgewood Avenue Port Orange, Florida 32127
Contact Person:	Leticia Maria Masci Ferreira, Vice President
Phone Number:	(386) 322-4500

SURETY:

Address:	_____
	_____
	_____
Contact Person:	_____
Phone Number:	_____

OWNER:

	City of Port Orange, Florida, a chartered municipal corporation
	1000 City Center Circle
	Port Orange, Florida 32129-4144
Contact Person:	City Manager
Phone Number:	(386) 506-5501

Amount: $1,633,861.65 **City Case/Project No.** **ITB 25-13 ITB 25-13 439865-3-54-01 SJR2C Loop Trail**

Description of Work: ITB 25-13 439865-3-54-01 SJR2C Loop Trail

Project Location: Florida Department of Transportation ("FDOT") St Johns River to Sea (SJR2C) Loop Trail Project, Spruce Creek Road from South of Selin Circle to Herbert Street, Port Orange, Volusia County, Florida

Legal Description: Florida Department of Transportation ("FDOT") St Johns River to Sea (SJR2C) Loop Trail Project, Spruce Creek Road from South of Selin Circle to Herbert Street, Port Orange, Volusia County, Florida.

Front Page

All other pages are subsequent to this page regardless of any numbers that may be printed thereon.

Masci General Contractor, Inc.

ITB 25-13 439865-3-54-01 SJR2C Loop Trail

Bond No._____

COMBINATION PAYMENT AND PERFORMANCE BOND
FOR
PUBLIC CONSTRUCTION

per Section 255.05, Florida Statutes
Guaranty for Construction of Public Improvements

BY THIS BOND, We, **MASCI GENERAL CONTRACTOR, INC.** as Principal, and _____, a corporation, as Surety, are bound to **CITY OF PORT ORANGE, FLORIDA**, a Florida municipal corporation, herein called "Owner" or sometimes referred to as "City," in the sum of **ONE MILLION SIX HUNDRED THIRTY-THREE THOUSAND EIGHT HUNDRED SIXTY-ONE AND 65/100 DOLLARS** (**$1,633,861.65**), for payment of which we bind ourselves, our heirs, personal representatives, successors, and assigns, jointly and severally.

THE CONDITION OF THIS BOND is that if Principal:

1. Performs the terms of that certain EJCDC Agreement having an effective date of _____, entered into by and between the Principal and the City, for SJR2C Loop Trail, hereinafter referred to as the "Contract," being made a part of this bond by reference, at the times and in the manner prescribed in the Contract; and

2. Promptly makes payments to all claimants, as defined in Section 255.05(1), Florida Statutes, supplying Principal with labor, materials, or supplies, used directly or indirectly by Principal in the prosecution of the work provided for in the Contract (the "Work"); and

3. Pays Owner all losses, damages, delay damages (including contractually authorized liquidated damages), expenses, costs, and attorney's fees, including appellate proceedings, that Owner sustains because of a breach or material breach by Principal under the Contract documents; and

4. Performs the guarantee of all work and materials furnished under the Contract for the time specified in the Contract, then this bond is void; otherwise it remains in full force.

Notice of Nonpayment and Time Limitations

Any action instituted by a claimant under this bond for payment must be in accordance with the notice and time limitation provisions in Sections 255.05(2), (8) and (10), Florida Statutes.

Any changes in or under the contract documents and compliance or noncompliance with any formalities connected with the contract or the changes does not affect Surety's obligation under this bond.

IN WITNESS WHEREOF, this performance and payment bond shall be deemed an original, this _____, day of _____, 2025.

Attest:

MASCI GENERAL CONTRACTOR, INC.
(Name of Principal)

_____
(As to Corporate Principal) Secretary

By:_____
Leticia Maria Masci Ferreira, Vice President

_____
(Witness to Principal)

(Corporate Seal)

_____
(Surety)

_____
(Witness to Surety)

By:_____
Name:_____
(Attorney-in-Fact)

(Corporate Seal)

NOTE: ***Date of BOND must not be prior to date of Contract.*** *If Developer/Principal is Partnership, all partners should execute BOND. All BONDS signed by an agent must be accompanied by a certified copy of the authority to act.*

IMPORTANT: Surety companies executing BONDS must appear on the Treasury Department's most current list (Circular 570 as amended) and be authorized to transact business in the State of Florida.

EJCDC General Conditions (Clean Copy)

Consisting of 75 Pages

This document has important legal consequences; consultation with an attorney is encouraged with respect to its use or modification. This document should be adapted to the particular circumstances of the contemplated Project and the controlling Laws and Regulations.

STANDARD GENERAL CONDITIONS OF THE CONSTRUCTION CONTRACT

Prepared By

EJCDC®
ENGINEERS JOINT CONTRACT DOCUMENTS COMMITTEE

ACEC
AMERICAN COUNCIL OF ENGINEERING COMPANIES

ASCE
AMERICAN SOCIETY OF CIVIL ENGINEERS

NSPE®
NATIONAL SOCIETY OF PROFESSIONAL ENGINEERS

Endorsed By

CSI®
Building Knowledge
Improving Project Delivery

NUCA
We Dig America

EJCDC® C-700, Standard General Conditions of the Construction Contract.
Copyright© 2018 National Society of Professional Engineers, American Council of Engineering Companies, and American Society of Civil Engineers. All rights reserved.

4885-5313-8281, v. 424

Copyright© 2018

National Society of Professional Engineers

1420 King Street, Alexandria, VA 22314-2794

(703) 684-2882

www.nspe.org

American Council of Engineering Companies

1015 15th Street N.W., Washington, DC 20005

(202) 347-7474

www.acec.org

American Society of Civil Engineers

1801 Alexander Bell Drive, Reston, VA 20191-4400

(800) 548-2723

www.asce.org

The copyright for this EJCDC document is owned jointly by the three sponsoring organizations listed above. The National Society of Professional Engineers is the Copyright Administrator for the EJCDC documents; please direct all inquiries regarding EJCDC copyrights to NSPE.

NOTE: EJCDC publications may be purchased at www.ejcdc.org, or from any of the sponsoring organizations above.

STANDARD GENERAL CONDITIONS OF THE CONSTRUCTION CONTRACT

TABLE OF CONTENTS

Page

Article 1—Definitions and Terminology 1
1.01 Defined Terms 1
1.02 Terminology 6
Article 2—Preliminary Matters 7
2.01 Delivery of Performance and Payment Bonds; Evidence of Insurance 7
2.02 Copies of Documents 8
2.03 Before Starting Construction 8
2.04 Preconstruction Conference; Designation of Authorized Representatives 8
2.05 Acceptance of Schedules 8
2.06 Electronic Transmittals 9
Article 3—Contract Documents: Intent, Requirements, Reuse 10
3.01 Intent 10
3.02 Reference Standards 10
3.03 Reporting and Resolving Discrepancies 11
3.04 Requirements of the Contract Documents 12
3.05 Reuse of Documents 12
Article 4—Commencement and Progress of the Work 13
4.01 Commencement of Contract Times; Notice to Proceed 13
4.02 Starting the Work 13
4.03 Reference Points 13
4.04 Progress Schedule 13
4.05 Delays in Contractor's Progress 13
Article 5—Site; Subsurface and Physical Conditions; Hazardous Environmental Conditions 15
5.01 Availability of Lands 15
5.02 Use of Site and Other Areas 15
5.03 Subsurface and Physical Conditions 16
5.04 Differing Subsurface or Physical Conditions 17

DRAFT

Copyright© 2018 National Society of Professional Engineers, American Council of Engineering Companies, and American Society of Civil Engineers. All rights reserved.

5.05 Underground Facilities 19
5.06 Hazardous Environmental Conditions at Site 21
Article 6—Bonds and Insurance 23
6.01 Performance, Payment, and Other Bonds 23
6.02 Insurance—General Provisions 23
6.03 Contractor's Insurance 25
6.04 Builder's Risk and Other Property Insurance 26
6.05 Property Losses; Subrogation 27
6.06 Receipt and Application of Property Insurance Proceeds 28
Article 7—Contractor's Responsibilities 28
7.01 Contractor's Means and Methods of Construction 28
7.02 Supervision and Superintendence 29
7.03 Labor; Working Hours 29
7.04 Services, Materials, and Equipment 30
7.05 "Or Equals" 30
7.06 Substitutes 31
7.07 Concerning Subcontractors and Suppliers 33
7.08 Patent Fees and Royalties 34
7.09 Permits 34
7.10 Taxes 34
7.11 Laws and Regulations 34
7.12 Record Documents 35
7.13 Safety and Protection 35
7.14 Hazard Communication Programs 36
7.15 Emergencies 37
7.16 Submittals 37
7.17 Contractor's General Warranty and Guarantee 40
7.18 Indemnification 41
7.19 Delegation of Professional Design Services 42
Article 8—Other Work at the Site 42
8.01 Other Work 42
8.02 Coordination 43
8.03 Legal Relationships 44

DRAFT

Copyright© 2018 National Society of Professional Engineers, American Council of Engineering Companies, and American Society of Civil Engineers. All rights reserved.

Article 9—Owner's Responsibilities 45
9.01 Communications to Contractor 45
9.02 Replacement of Engineer 45
9.03 Furnish Data 45
9.04 Pay When Due 45
9.05 Lands and Easements; Reports, Tests, and Drawings 45
9.06 Insurance 45
9.07 Change Orders 45
9.08 Inspections, Tests, and Approvals 45
9.09 Limitations on Owner's Responsibilities 45
9.10 Undisclosed Hazardous Environmental Condition 46
9.11 Evidence of Financial Arrangements 46
9.12 Safety Programs 46
Article 10—Engineer's Status During Construction 46
10.01 Owner's Representative 46
10.02 Visits to Site 46
10.03 Resident Project Representative 46
10.04 Engineer's Authority 47
10.05 Determinations for Unit Price Work 47
10.06 Decisions on Requirements of Contract Documents and Acceptability of Work 47
10.07 Limitations on Engineer's Authority and Responsibilities 47
10.08 Compliance with Safety Program 48
Article 11—Changes to the Contract 48
11.01 Amending and Supplementing the Contract 48
11.02 Change Orders 48
11.03 Work Change Directives 49
11.04 Field Orders 49
11.05 Owner-Authorized Changes in the Work 49
11.06 Unauthorized Changes in the Work 50
11.07 Change of Contract Price 50
11.08 Change of Contract Times 51
11.09 Change Proposals 51
11.10 Notification to Surety 53

DRAFT

Copyright© 2018 National Society of Professional Engineers, American Council of Engineering Companies, and American Society of Civil Engineers. All rights reserved.

Article 12—Claims 53
12.01 Claims 53
Article 13—Cost of the Work; Allowances; Unit Price Work 53
13.01 Cost of the Work 53
13.02 Allowances 53
13.03 Unit Price Work 54
Article 14—Tests and Inspections; Correction, Removal, or Acceptance of Defective Work 54
14.01 Access to Work 54
14.02 Tests, Inspections, and Approvals 55
14.03 Defective Work 55
14.04 Acceptance of Defective Work 56
14.05 Uncovering Work 57
14.06 Owner May Stop the Work 57
14.07 Owner May Correct Defective Work 57
Article 15—Payments to Contractor; Set-Offs; Completion; Correction Period 58
15.01 Progress Payments 58
15.02 Contractor's Warranty of Title 61
15.03 Substantial Completion 61
15.04 Partial Use or Occupancy 62
15.05 Final Inspection 63
15.06 Final Payment 63
15.07 Waiver of Claims 65
15.08 Correction Period 65
Article 16—Suspension of Work and Termination 66
16.01 Owner May Suspend Work 66
16.02 Owner May Terminate for Cause 66
16.03 Owner May Terminate for Convenience 67
16.04 Contractor May Stop Work or Terminate 68
Article 17—Final Resolution of Disputes 69
17.01 Methods and Procedures 69
Article 18—Miscellaneous 70
18.01 Giving Notice 70
18.02 Computation of Times 70

Copyright© 2018 National Society of Professional Engineers, American Council of Engineering Companies, and American Society of Civil Engineers. All rights reserved.

18.03 Cumulative Remedies 70
18.04 Limitation of Damages 70
18.05 No Waiver 70
18.06 Survival of Obligations 70
18.07 Controlling Law 71
18.08 Assignment of Contract 71
18.09 Successors and Assigns 71
18.10 Headings 71

DRAFT

Copyright© 2018 National Society of Professional Engineers, American Council of Engineering Companies, and American Society of Civil Engineers. All rights reserved.

STANDARD GENERAL CONDITIONS OF THE CONSTRUCTION CONTRACT

ARTICLE 1—DEFINITIONS AND TERMINOLOGY

1.01 *Defined Terms*

A. Wherever used in the Bidding Requirements or Contract Documents, a term printed with initial capital letters, including the term's singular and plural forms, will have the meaning indicated in the definitions below. In addition to terms specifically defined, terms with initial capital letters in the Contract Documents include references to identified articles and paragraphs, and the titles of other documents or forms.

1. *Addenda*—Written or graphic instruments issued prior to the opening of Bids which clarify, correct, or change the Bidding Requirements or the proposed Contract Documents.

2. *Agreement*—The written instrument, executed by Owner and Contractor, that sets forth the Contract Price and Contract Times, identifies the parties and the Engineer, and designates the specific items that are Contract Documents.

3. *Application for Payment*—The document prepared by Contractor, in a form acceptable to Engineer, to request progress or final payments, and which is to be accompanied by such supporting documentation as is required by the Contract Documents.

4. *Bid*—The offer of a Bidder submitted on the prescribed form setting forth the prices for the Work to be performed.

5. *Bidder*—An individual or entity that submits a Bid to Owner.

6. *Bidding Documents*—The Bidding Requirements, the proposed Contract Documents, and all Addenda.

7. *Bidding Requirements*—The Advertisement or invitation to bid, Instructions to Bidders, Bid Bond or other Bid security, if any, the Bid Form, and the Bid with any attachments.

8. *Change Order*—A document which is signed by Contractor and Owner and authorizes an addition, deletion, or revision in the Work or an adjustment in the Contract Price or the Contract Times, or other revision to the Contract, issued on or after the Effective Date of the Contract.

9. *Change Proposal*—A written request by Contractor, duly submitted in compliance with the procedural requirements set forth herein, seeking an adjustment in Contract Price or Contract Times; contesting an initial decision by Engineer concerning the requirements of the Contract Documents or the acceptability of Work under the Contract Documents; challenging a set-off against payments due; or seeking other relief with respect to the terms of the Contract.

Copyright© 2018 National Society of Professional Engineers, American Council of Engineering Companies, and American Society of Civil Engineers. All rights reserved.

10. *Claim*

    a. A demand or assertion by Owner directly to Contractor, duly submitted in compliance with the procedural requirements set forth herein, seeking an adjustment of Contract Price or Contract Times; contesting an initial decision by Engineer concerning the requirements of the Contract Documents or the acceptability of Work under the Contract Documents; contesting Engineer's decision regarding a Change Proposal; seeking resolution of a contractual issue that Engineer has declined to address; or seeking other relief with respect to the terms of the Contract.

    b. A demand or assertion by Contractor directly to Owner, duly submitted in compliance with the procedural requirements set forth herein, contesting Engineer's decision regarding a Change Proposal, or seeking resolution of a contractual issue that Engineer has declined to address.

    c. A demand or assertion by Owner or Contractor, duly submitted in compliance with the procedural requirements set forth herein, made pursuant to Paragraph 12.01.A.4, concerning disputes arising after Engineer has issued a recommendation of final payment.

    d. A demand for money or services by a third party is not a Claim.

11. *Constituent of Concern*—Asbestos, petroleum, radioactive materials, polychlorinated biphenyls (PCBs), lead-based paint (as defined by the HUD/EPA standard), hazardous waste, and any substance, product, waste, or other material of any nature whatsoever that is or becomes listed, regulated, or addressed pursuant to Laws and Regulations regulating, relating to, or imposing liability or standards of conduct concerning, any hazardous, toxic, or dangerous waste, substance, or material.

12. *Contract*—The entire and integrated written contract between Owner and Contractor concerning the Work.

13. *Contract Documents*—Those items so designated in the Agreement, and which together comprise the Contract.

14. *Contract Price*—The money that Owner has agreed to pay Contractor for completion of the Work in accordance with the Contract Documents.

15. *Contract Times*—The number of days or the dates by which Contractor shall: (a) achieve Milestones, if any; (b) achieve Substantial Completion; and (c) complete the Work.

16. *Contractor*—The individual or entity with which Owner has contracted for performance of the Work.

17. *Cost of the Work*—See Paragraph 13.01 for definition.

18. *Drawings*—The part of the Contract that graphically shows the scope, extent, and character of the Work to be performed by Contractor.

19. *Effective Date of the Contract*—The date, indicated in the Agreement, on which the Contract becomes effective.

Copyright© 2018 National Society of Professional Engineers, American Council of Engineering Companies, and American Society of Civil Engineers. All rights reserved.

20. *Electronic Document*—Any Project-related correspondence, attachments to correspondence, data, documents, drawings, information, or graphics, including but not limited to Shop Drawings and other Submittals, that are in an electronic or digital format.

21. *Electronic Means*—Electronic mail (email), upload/download from a secure Project website, or other communications methods that allow: (a) the transmission or communication of Electronic Documents; (b) the documentation of transmissions, including sending and receipt; (c) printing of the transmitted Electronic Document by the recipient; (d) the storage and archiving of the Electronic Document by sender and recipient; and (e) the use by recipient of the Electronic Document for purposes permitted by this Contract. Electronic Means does not include the use of text messaging, or of Facebook, Twitter, Instagram, or similar social media services for transmission of Electronic Documents.

22. *Engineer*—The individual or entity named as such in the Agreement.

23. *Field Order*—A written order issued by Engineer which requires minor changes in the Work but does not change the Contract Price or the Contract Times.

24. *Hazardous Environmental Condition*—The presence at the Site of Constituents of Concern in such quantities or circumstances that may present a danger to persons or property exposed thereto.

    a. The presence at the Site of materials that are necessary for the execution of the Work, or that are to be incorporated into the Work, and that are controlled and contained pursuant to industry practices, Laws and Regulations, and the requirements of the Contract, is not a Hazardous Environmental Condition.

    b. The presence of Constituents of Concern that are to be removed or remediated as part of the Work is not a Hazardous Environmental Condition.

    c. The presence of Constituents of Concern as part of the routine, anticipated, and obvious working conditions at the Site, is not a Hazardous Environmental Condition.

25. *Laws and Regulations; Laws or Regulations*—Any and all applicable laws, statutes, rules, regulations, ordinances, codes, and binding decrees, resolutions, and orders of any and all governmental bodies, agencies, authorities, and courts having jurisdiction.

26. *Liens*—Charges, security interests, or encumbrances upon Contract-related funds, real property, or personal property.

27. *Milestone*—A principal event in the performance of the Work that the Contract requires Contractor to achieve by an intermediate completion date, or by a time prior to Substantial Completion of all the Work.

28. *Notice of Award*—The written notice by Owner to a Bidder of Owner's acceptance of the Bid.

29. *Notice to Proceed*—A written notice by Owner to Contractor fixing the date on which the Contract Times will commence to run and on which Contractor shall start to perform the Work.

Copyright© 2018 National Society of Professional Engineers, American Council of Engineering Companies, and American Society of Civil Engineers. All rights reserved.

30. *Owner*—The individual or entity with which Contractor has contracted regarding the Work, and which has agreed to pay Contractor for the performance of the Work, pursuant to the terms of the Contract.

31. *Progress Schedule*—A schedule, prepared and maintained by Contractor, describing the sequence and duration of the activities comprising Contractor's plan to accomplish the Work within the Contract Times.

32. *Project*—The total undertaking to be accomplished for Owner by engineers, contractors, and others, including planning, study, design, construction, testing, commissioning, and start-up, and of which the Work to be performed under the Contract Documents is a part.

33. *Project Manual*—The bound documentary information prepared for bidding and constructing the Work. A listing of the contents of the Project Manual, which may be bound in one or more volumes, is contained in the table(s) of contents.

34. *Punch List* - the detailed list of incomplete, unsatisfactory or unacceptable, or defective items that Contractor is required to complete prior to final payment that is generated in accordance with Paragraph 14.06 of the General Conditions."

35. *Resident Project Representative*—The authorized representative of Engineer assigned to assist Engineer at the Site. As used herein, the term Resident Project Representative (RPR) includes any assistants or field staff of Resident Project Representative.

36. *Samples*—Physical examples of materials, equipment, or workmanship that are representative of some portion of the Work and that establish the standards by which such portion of the Work will be judged.

37. *Schedule of Submittals*—A schedule, prepared and maintained by Contractor, of required submittals and the time requirements for Engineer's review of the submittals.

38. *Schedule of Values*—A schedule, prepared and maintained by Contractor, allocating portions of the Contract Price to various portions of the Work and used as the basis for reviewing Contractor's Applications for Payment.

39. *Shop Drawings*—All drawings, diagrams, illustrations, schedules, and other data or information that are specifically prepared or assembled by or for Contractor and submitted by Contractor to illustrate some portion of the Work. Shop Drawings, whether approved or not, are not Drawings and are not Contract Documents.

40. *Site*—Lands or areas indicated in the Contract Documents as being furnished by Owner upon which the Work is to be performed, including rights-of-way and easements, and such other lands or areas furnished by Owner which are designated for the use of Contractor.

41. *Specifications*—The part of the Contract that consists of written requirements for materials, equipment, systems, standards, and workmanship as applied to the Work, and certain administrative requirements and procedural matters applicable to the Work.

42. *Subcontractor*—An individual or entity having a direct contract with Contractor or with any other Subcontractor for the performance of a part of the Work.

Copyright© 2018 National Society of Professional Engineers, American Council of Engineering Companies, and American Society of Civil Engineers. All rights reserved.

43. *Submittal*—A written or graphic document, prepared by or for Contractor, which the Contract Documents require Contractor to submit to Engineer, or that is indicated as a Submittal in the Schedule of Submittals accepted by Engineer. Submittals may include Shop Drawings and Samples; schedules; product data; Owner-delegated designs; sustainable design information; information on special procedures; testing plans; results of tests and evaluations, source quality-control testing and inspections, and field or Site quality-control testing and inspections; warranties and certifications; Suppliers' instructions and reports; records of delivery of spare parts and tools; operations and maintenance data; Project photographic documentation; record documents; and other such documents required by the Contract Documents. Submittals, whether or not approved or accepted by Engineer, are not Contract Documents. Change Proposals, Change Orders, Claims, notices, Applications for Payment, and requests for interpretation or clarification are not Submittals.

44. *Substantial Completion*—The time and date at which the Work (or a specified part thereof) has progressed to the point where, in the opinion of Engineer, the Work (or a specified part thereof) is sufficiently complete, in accordance with the Contract Documents, so that the Work (or a specified part thereof) can be utilized for the purposes for which it is intended. The terms "substantially complete" and "substantially completed" as applied to all or part of the Work refer to Substantial Completion of such Work.

45. *Successful Bidder*—The Bidder to which the Owner makes an award of contract.

46. *Supplementary Conditions*—The part of the Contract that amends or supplements these General Conditions.

47. *Supplier*—A manufacturer, fabricator, supplier, distributor, or vendor having a direct contract with Contractor or with any Subcontractor to furnish materials or equipment to be incorporated in the Work by Contractor or a Subcontractor.

48. *Technical Data*

    a. Those items expressly identified as Technical Data in the Supplementary Conditions, with respect to either (1) existing subsurface conditions at or adjacent to the Site, or existing physical conditions at or adjacent to the Site including existing surface or subsurface structures (except Underground Facilities) or (2) Hazardous Environmental Conditions at the Site.

    b. If no such express identifications of Technical Data have been made with respect to conditions at the Site, then Technical Data is defined, with respect to conditions at the Site under Paragraphs 5.03, 5.04, and 5.06, as the data contained in boring logs, recorded measurements of subsurface water levels, assessments of the condition of subsurface facilities, laboratory test results, and other factual, objective information regarding conditions at the Site that are set forth in any geotechnical, environmental, or other Site or facilities conditions report prepared for the Project and made available to Contractor.

Copyright© 2018 National Society of Professional Engineers, American Council of Engineering Companies, and American Society of Civil Engineers. All rights reserved.

c. Information and data regarding the presence or location of Underground Facilities are not intended to be categorized, identified, or defined as Technical Data, and instead Underground Facilities are shown or indicated on the Drawings.

49. *Underground Facilities*—All active or not-in-service underground lines, pipelines, conduits, ducts, encasements, cables, wires, manholes, vaults, tanks, tunnels, or other such facilities or systems at the Site, including but not limited to those facilities or systems that produce, transmit, distribute, or convey telephone or other communications, cable television, fiber optic transmissions, power, electricity, light, heat, gases, oil, crude oil products, liquid petroleum products, water, steam, waste, wastewater, storm water, other liquids or chemicals, or traffic or other control systems. An abandoned facility or system is not an Underground Facility.

50. *Unit Price Work*—Work to be paid for on the basis of unit prices.

51. *Work*—The entire construction or the various separately identifiable parts thereof required to be provided under the Contract Documents. Work includes and is the result of performing or providing all labor, services, and documentation necessary to produce such construction; furnishing, installing, and incorporating all materials and equipment into such construction; and may include related services such as testing, start-up, and commissioning, all as required by the Contract Documents.

52. Emergency *Work Change Directive*—A written directive to Contractor issued on or after the Effective Date of the Contract, signed by Owner and recommended by Engineer, ordering an addition, deletion, or revision in the Work due to an emergency that prevents the parties from using the Change Order process.

1.02 *Terminology*

A. The words and terms discussed in Paragraphs 1.02.B, C, D, and E are not defined terms that require initial capital letters, but, when used in the Bidding Requirements or Contract Documents, have the indicated meaning.

B. *Intent of Certain Terms or Adjectives*: The Contract Documents include the terms "as allowed," "as approved," "as ordered," "as directed" or terms of like effect or import to authorize an exercise of professional judgment by Engineer. In addition, the adjectives "reasonable," "suitable," "acceptable," "proper," "satisfactory," or adjectives of like effect or import are used to describe an action or determination of Engineer as to the Work. It is intended that such exercise of professional judgment, action, or determination will be solely to evaluate, in general, the Work for compliance with the information in the Contract Documents and with the design concept of the Project as a functioning whole as shown or indicated in the Contract Documents (unless there is a specific statement indicating otherwise). The use of any such term or adjective is not intended to and shall not be effective to assign to Engineer any duty or authority to supervise or direct the performance of the Work, or any duty or authority to undertake responsibility contrary to the provisions of Article 10 or any other provision of the Contract Documents.

C. *Day*: The word "day" means a calendar day of 24 hours measured from midnight to the next midnight, including weekends and legal holidays unless otherwise specifically defined.

Copyright© 2018 National Society of Professional Engineers, American Council of Engineering Companies, and American Society of Civil Engineers. All rights reserved.

D. *Defective*: The word "defective," when modifying the word "Work," refers to Work that is unsatisfactory, faulty, or deficient in that it:

1. does not conform to the Contract Documents;

2. does not meet the requirements of any applicable inspection, reference standard, test, or approval referred to in the Contract Documents; or

3. has been damaged prior to Engineer's recommendation of final payment (unless responsibility for the protection thereof has been assumed by Owner at Substantial Completion in accordance with Paragraph 15.03 or Paragraph 15.04).

E. *Furnish, Install, Perform, Provide*

1. The word "furnish," when used in connection with services, materials, or equipment, means to supply and deliver said services, materials, or equipment to the Site (or some other specified location) ready for use or installation and in usable or operable condition.

2. The word "install," when used in connection with services, materials, or equipment, means to put into use or place in final position said services, materials, or equipment complete and ready for intended use.

3. The words "perform" or "provide," when used in connection with services, materials, or equipment, means to furnish and install said services, materials, or equipment complete and ready for intended use.

4. If the Contract Documents establish an obligation of Contractor with respect to specific services, materials, or equipment, but do not expressly use any of the four words "furnish," "install," "perform," or "provide," then Contractor shall furnish and install said services, materials, or equipment complete and ready for intended use.

F. *Contract Price or Contract Times*: References to a change in "Contract Price or Contract Times" or "Contract Times or Contract Price" or similar, indicate that such change applies to (1) Contract Price, (2) Contract Times, or (3) both Contract Price and Contract Times, as warranted, even if the term "or both" is not expressed.

G. Unless stated otherwise in the Contract Documents, words or phrases that have a well-known technical or construction industry or trade meaning are used in the Contract Documents in accordance with such recognized meaning.

ARTICLE 2—PRELIMINARY MATTERS

2.01 *Delivery of Performance and Payment Bonds; Evidence of Insurance*

A. *Performance and Payment Bonds*: When Contractor delivers the signed counterparts of the Agreement to Owner, Contractor shall also deliver to Owner the performance bond and payment bond (if the Contract requires Contractor to furnish such bonds).

B. *Evidence of Contractor's Insurance*: When Contractor delivers the signed counterparts of the Agreement to Owner, Contractor shall also deliver to Owner, with copies to each additional insured (as identified in the Contract), the certificates, endorsements, and other evidence of insurance required to be provided by Contractor in accordance with Article 6, except to the

Copyright© 2018 National Society of Professional Engineers, American Council of Engineering Companies, and American Society of Civil Engineers. All rights reserved.

extent the Supplementary Conditions expressly establish other dates for delivery of specific insurance policies.

C. Deleted in its entirety.

2.02 *Copies of Documents*

A. Owner shall furnish to Contractor four printed copies of the Contract (including one fully signed counterpart of the Agreement), and one copy in electronic portable document format (PDF). Additional printed copies will be furnished upon request at the cost of reproduction.

B. Owner shall maintain and safeguard at least one original printed record version of the Contract, including Drawings and Specifications signed and sealed by Engineer and other design professionals. Owner shall make such original printed record version of the Contract available to Contractor for review. Owner may delegate the responsibilities under this provision to Engineer.

2.03 *Before Starting Construction*

A. *Preliminary Schedules*: Within 10 days after Contract award or at the preconstruction conference (or as otherwise required by the Contract Documents), or whichever is later, Contractor shall submit to Engineer for timely review.

1. a preliminary Progress Schedule indicating the times (numbers of days or dates) for starting and completing the various stages of the Work, including any Milestones specified in the Contract, and identifying the Substantial Completion date;

2. a preliminary Schedule of Submittals; and

3. a preliminary Schedule of Values for all of the Work which includes quantities and prices of items which when added together equal the Contract Price and subdivides the Work into component parts in sufficient detail to serve as the basis for progress payments during performance of the Work. Such prices will include an appropriate amount of overhead and profit applicable to each item of Work.

2.04 *Preconstruction Conference; Designation of Authorized Representatives*

A. Before any Work at the Site is started, a conference attended by Owner, Contractor, Engineer, and others as appropriate will be held to establish a working understanding among the parties as to the Work, and to discuss the schedules referred to in Paragraph 2.03.A, procedures for handling Shop Drawings, Samples, and other Submittals, processing Applications for Payment, electronic or digital transmittals, and maintaining required records.

B. At this conference Owner and Contractor each shall designate, in writing, a specific individual to act as its authorized representative with respect to the services and responsibilities under the Contract. Such individuals shall have the authority to transmit and receive information, render decisions relative to the Contract, and otherwise act on behalf of each respective party.

2.05 *Acceptance of Schedules*

A. The Engineer will review and respond to the Contractor within 15 calendar days of receipt of the Progress Schedule. The Engineer will return inadequate Progress Schedules to the

Copyright© 2018 National Society of Professional Engineers, American Council of Engineering Companies, and American Society of Civil Engineers. All rights reserved.

Contractor for corrections. Resubmit a corrected schedule within 15 calendar days from date of the Engineer's return transmittal.

1. The Progress Schedule will be acceptable to Engineer and Owner if it provides an orderly progression of the Work to completion within the Contract Times and identifies Contractor's critical path sequence of scheduled activities with the earliest start dates for scheduled activities, the earliest finish date for scheduled activities, the latest start date for scheduled activities and latest finish date for scheduled activities. All float in the Progress Schedule shall belong to Owner in order to offset a delay attributable to Owner or its agents. Such acceptance will not impose on Engineer or Owner responsibility for the Progress Schedule, for sequencing, scheduling, or progress of the Work, nor interfere with or relieve Contractor from Contractor's full responsibility therefor.
2. Contractor's Schedule of Submittals will be acceptable to Engineer and Owner if it provides a workable arrangement for reviewing and processing the required submittals.
3. Contractor's Schedule of Values will be acceptable to Engineer and Owner as to form and substance if it provides a reasonable allocation of the Contract Price to the component parts of the Work.
4. If a schedule is not acceptable, Contractor will have an additional 10 days to revise and resubmit the schedule.
5. If Contractor submits a schedule indicating an intention to achieve completion of the Work prior to contractually required dates, including milestones, no liability of the Owner to the Contractor for any failure of the Contractor to complete early shall be created, whether or not the Owner approves such schedule.
6. The Contractor acknowledges that the Owner may retain the services of a scheduling consultant at the Owner's expense. The Contractor shall cooperate with any such scheduling consultant at the Owner's direction, including without limitation, with regard to the preparation of the Project schedule.

2.06 *Electronic Transmittals*

A. Except as otherwise stated elsewhere in the Contract, the Owner, Engineer, and Contractor may send, and shall accept, Electronic Documents transmitted by Electronic Means.

B. If the Contract does not establish protocols for Electronic Means, then Owner, Engineer, and Contractor shall jointly develop such protocols.

C. Subject to any governing protocols for Electronic Means, when transmitting Electronic Documents by Electronic Means, the transmitting party makes no representations as to long-term compatibility, usability, or readability of the Electronic Documents resulting from the recipient's use of software application packages, operating systems, or computer hardware differing from those used in the drafting or transmittal of the Electronic Documents.

Copyright© 2018 National Society of Professional Engineers, American Council of Engineering Companies, and American Society of Civil Engineers. All rights reserved.

ARTICLE 3—CONTRACT DOCUMENTS: INTENT, REQUIREMENTS, REUSE

3.01 *Intent*

A. The Contract Documents are complementary; what is required by one Contract Document is as binding as if required by all.

B. It is the intent of the Contract Documents to describe a functionally complete Project (or part thereof) to be constructed in accordance with the Contract Documents.

C. Unless otherwise stated in the Contract Documents, if there is a discrepancy between the electronic versions of the Contract Documents (including any printed copies derived from such electronic versions) and the printed record version, the printed record version will govern.

D. The Contract supersedes prior negotiations, representations, and agreements, whether written or oral.

E. Engineer will issue clarifications and interpretations of the Contract Documents as provided herein.

F. Any provision or part of the Contract Documents held to be void or unenforceable under any Law or Regulation will be deemed stricken, and all remaining provisions will continue to be valid and binding upon Owner and Contractor, which agree that the Contract Documents will be reformed to replace such stricken provision or part thereof with a valid and enforceable provision that comes as close as possible to expressing the intention of the stricken provision.

G. Nothing in the Contract Documents creates:

1. any contractual relationship between Owner or Engineer and any Subcontractor, Supplier, or other individual or entity performing or furnishing any of the Work, for the benefit of such Subcontractor, Supplier, or other individual or entity; or

2. any obligation on the part of Owner or Engineer to pay or to see to the payment of any money due any such Subcontractor, Supplier, or other individual or entity, except as may otherwise be required by Laws and Regulations.

3.02 *Reference Standards*

A. *Standards Specifications, Codes, Laws and Regulations*

1. Reference in the Contract Documents to standard specifications, manuals, reference standards, or codes of any technical society, organization, or association, or to Laws or Regulations, whether such reference be specific or by implication, means the standard specification, manual, reference standard, code, or Laws or Regulations in effect at the time of opening of Bids (or on the Effective Date of the Contract if there were no Bids), except as may be otherwise specifically stated in the Contract Documents.

2. No provision of any such standard specification, manual, reference standard, or code, and no instruction of a Supplier, will be effective to change the duties or responsibilities of Owner, Contractor, or Engineer from those set forth in the part of the Contract Documents prepared by or for Engineer. No such provision or instruction shall be effective to assign to Owner or Engineer any duty or authority to supervise or direct the

Copyright© 2018 National Society of Professional Engineers, American Council of Engineering Companies, and American Society of Civil Engineers. All rights reserved.

performance of the Work, or any duty or authority to undertake responsibility inconsistent with the provisions of the part of the Contract Documents prepared by or for Engineer.

3.03 *Reporting and Resolving Discrepancies*

A. *Reporting Discrepancies*

1. *Contractor's Verification of Figures and Field Measurements*: Before undertaking each part of the Work, Contractor shall carefully study the Contract Documents, and check and verify pertinent figures and dimensions therein, particularly with respect to applicable field measurements. Contractor shall promptly report in writing to Engineer any conflict, error, ambiguity, or discrepancy that Contractor discovers, or has actual knowledge of, and shall not proceed with any Work affected thereby until the conflict, error, ambiguity, or discrepancy is resolved by a clarification or interpretation by Engineer, or by an amendment or supplement to the Contract issued pursuant to Paragraph 11.01.

2. *Contractor's Review of Contract Documents*: If, before or during the performance of the Work, Contractor discovers any conflict, error, ambiguity, or discrepancy within the Contract Documents, or between the Contract Documents and (a) any applicable Law or Regulation, (b) actual field conditions, (c) any standard specification, manual, reference standard, or code, or (d) any instruction of any Supplier, then Contractor shall promptly report it to Engineer in writing. Contractor shall not proceed with the Work affected thereby (except in an emergency as required by Paragraph 7.15) until the conflict, error, ambiguity, or discrepancy is resolved, by a clarification or interpretation by Engineer, or by an amendment or supplement to the Contract issued pursuant to Paragraph 11.01.

3. Contractor shall not be liable to Owner or Engineer for failure to report any conflict, error, ambiguity, or discrepancy in the Contract Documents unless Contractor had actual knowledge thereof or could have discovered the conflict or error by careful review of the Contract Documents including pertinent figures and applicable field measurements and dimensions therein.

B. *Resolving Discrepancies*

1. Except as may be otherwise specifically stated in the Contract Documents, the provisions of the part of the Contract Documents prepared by or for Engineer take precedence in resolving any conflict, error, ambiguity, or discrepancy between such provisions of the Contract Documents and:

   a. the provisions of any standard specification, manual, reference standard, or code, or the instruction of any Supplier (whether or not specifically incorporated by reference as a Contract Document); or

   b. the provisions of any Laws or Regulations applicable to the performance of the Work (unless such an interpretation of the provisions of the Contract Documents would result in violation of such Law or Regulation).

   c. In the event there is a discrepancy or conflict in the Drawings and Specifications applicable to a particular detail or assembly of the Work, Contractor must promptly seek clarification from Engineer before proceeding with the Work. Subject to

Copyright© 2018 National Society of Professional Engineers, American Council of Engineering Companies, and American Society of Civil Engineers. All rights reserved.

Paragraph 3.03.A.3. above, if Contractor proceeds with the Work without seeking such clarification, Contractor will be bound by the stricter and more expensive detail or assembly. Contractor agrees and recognizes that in agreeing to the Contract Price it has factored in the costs associated with installing the stricter and more expensive detail or assembly.

3.04 *Requirements of the Contract Documents*

A. During the performance of the Work and until final payment, Contractor and Owner shall submit to the Engineer in writing all matters in question concerning the requirements of the Contract Documents (sometimes referred to as requests for information or interpretation—RFIs), or relating to the acceptability of the Work under the Contract Documents, as soon as possible after such matters arise. Engineer will be the initial interpreter of the requirements of the Contract Documents, and judge of the acceptability of the Work.

B. Engineer will, with reasonable promptness, render a written clarification, interpretation, or decision on the issue submitted, or initiate an amendment or supplement to the Contract Documents. Engineer's written clarification, interpretation, or decision will be final and binding on Contractor, unless it appeals by submitting a Change Proposal, and on Owner, unless it appeals by filing a Claim.

C. If a submitted matter in question concerns terms and conditions of the Contract Documents that do not involve (1) the performance or acceptability of the Work under the Contract Documents, (2) the design (as set forth in the Drawings, Specifications, or otherwise), or (3) other engineering or technical matters, then Engineer will promptly notify Owner and Contractor in writing that Engineer is unable to provide a decision or interpretation. If Owner and Contractor are unable to agree on resolution of such a matter in question, either party may pursue resolution as provided in Article 12.

3.05 *Reuse of Documents*

A. Contractor and its Subcontractors and Suppliers shall not:

1. have or acquire any title to or ownership rights in any of the Drawings, Specifications, or other documents (or copies of any thereof) prepared by or bearing the seal of Engineer or its consultants, including electronic media versions, or reuse any such Drawings, Specifications, other documents, or copies thereof on extensions of the Project or any other project without written consent of Owner and Engineer and specific written verification or adaptation by Engineer; or

2. have or acquire any title or ownership rights in any other Contract Documents, reuse any such Contract Documents for any purpose without Owner's express written consent, or violate any copyrights pertaining to such Contract Documents.

B. The prohibitions of this Paragraph 3.05 will survive final payment, or termination of the Contract. Nothing herein precludes Contractor from retaining copies of the Contract Documents for record purposes.

Copyright© 2018 National Society of Professional Engineers, American Council of Engineering Companies, and American Society of Civil Engineers. All rights reserved.

ARTICLE 4—COMMENCEMENT AND PROGRESS OF THE WORK

4.01 *Commencement of Contract Times; Notice to Proceed*

A. The Contract Times shall not commence to run and Contractor shall not commence the Work until Owner issues a Notice to Proceed. A Notice to Proceed may be issued by Owner at any time after the Effective Date of the Contract.

4.02 *Starting the Work*

A. Contractor shall start to perform the Work on the date specified in the Notice to Proceed which shall cause the Contract Times to commence to run. No Work may be done at the Site prior to such date.

4.03 *Reference Points*

A. Owner shall provide engineering surveys to establish reference points for construction which in Engineer's judgment are necessary to enable Contractor to proceed with the Work. Contractor shall be responsible for laying out the Work, shall protect and preserve the established reference points and property monuments, and shall make no changes or relocations without the prior written approval of Owner. Contractor shall report to Engineer whenever any reference point or property monument is lost or destroyed or requires relocation because of necessary changes in grades or locations, and shall be responsible for the accurate replacement or relocation of such reference points or property monuments by professionally qualified personnel.

B. Contractor shall lay-out and verify all field dimensions and measurements at the Site before proceeding with any portion of the Work.

4.04 *Progress Schedule*

A. Contractor shall adhere to the Progress Schedule established in accordance with Paragraph 2.05 as it may be adjusted from time to time as provided below.

1. Contractor shall submit to Engineer for acceptance (to the extent indicated in Paragraph 2.05) proposed adjustments in the Progress Schedule that will not result in changing the Contract Times.

2. Proposed adjustments in the Progress Schedule that will change the Contract Times must be submitted in accordance with the requirements of Article 11.

B. Contractor shall carry on the Work and adhere to the Progress Schedule during all disputes or disagreements with Owner. No Work will be delayed or postponed pending resolution of any disputes or disagreements, or during any appeal process, except as permitted by Paragraph 16.04, or as Owner and Contractor may otherwise agree in writing.

4.05 *Delays in Contractor's Progress*

A. If Owner, Engineer, or anyone for whom Owner is responsible, delays, disrupts, or interferes with the performance or progress of the Work, then Contractor shall only be entitled to an equitable adjustment in Contract Times.

Copyright© 2018 National Society of Professional Engineers, American Council of Engineering Companies, and American Society of Civil Engineers. All rights reserved.

B. Contractor shall not be entitled to an adjustment in Contract Price or Contract Times for delay, disruption, or interference caused by or within the control of Contractor. Delay, disruption, and interference attributable to and within the control of a Subcontractor or Supplier shall be deemed to be within the control of Contractor.

C. If Contractor's performance or progress is delayed, disrupted, or interfered with by unanticipated causes not the fault of and beyond the control of Owner, Contractor, and those for which they are responsible, then Contractor shall be entitled to an equitable adjustment in Contract Times. Such an adjustment will be Contractor's sole and exclusive remedy for the delays, disruption, and interference described in this paragraph. Unanticipated causes of delay, disruption, or interference that may give rise to an adjustment in Contract Times under this paragraph include but are not limited to the following:

1. Severe and unavoidable natural catastrophes such as fires, floods, epidemics, and earthquakes;

2. Acts or failures to act of third-party utility owners or other third-party entities (other than those third-party utility owners or other third-party entities performing other work at or adjacent to the Site as arranged by or under contract with Owner, as contemplated in Article 8); and

3. Acts of war or terrorism.

D. Contractor's entitlement to an adjustment of Contract Times is limited as follows:

1. Contractor's entitlement to an adjustment of the Contract Times is conditioned on the delay, disruption, or interference adversely affecting an activity on the critical path to completion of the Work, as of the time of the delay, disruption, or interference.

2. Deleted in its entirety.

3. Adjustments of Contract Times are subject to the provisions of Article 11.

E. Each Contractor request or Change Proposal seeking an increase in Contract Times must be supplemented by supporting data that sets forth in detail the following:

1. The circumstances that form the basis for the requested adjustment;

2. The date upon which each cause of delay, disruption, or interference began to affect the progress of the Work;

3. The date upon which each cause of delay, disruption, or interference ceased to affect the progress of the Work;

4. The number of days' increase in Contract Times claimed as a consequence of each such cause of delay, disruption, or interference; and

5. Deleted in its entirety.

Contractor shall also furnish such additional supporting documentation as Owner or Engineer may require including, where appropriate, a revised progress schedule indicating all the activities affected by the delay, disruption, or interference, and an explanation of the effect of the delay, disruption, or interference on the critical path to completion of the Work.

Copyright© 2018 National Society of Professional Engineers, American Council of Engineering Companies, and American Society of Civil Engineers. All rights reserved.

F. Delays, disruption, and interference to the performance or progress of the Work resulting from the existence of a differing subsurface or physical condition, an Underground Facility that was not shown or indicated by the Contract Documents, or not shown or indicated with reasonable accuracy, and those resulting from Hazardous Environmental Conditions, are governed by Article 5, together with the provisions of Paragraphs 4.05.D and 4.05.E.

G. Paragraph 8.03 addresses delays, disruption, and interference to the performance or progress of the Work resulting from the performance of certain other work at or adjacent to the Site.

ARTICLE 5—SITE; SUBSURFACE AND PHYSICAL CONDITIONS; HAZARDOUS ENVIRONMENTAL CONDITIONS

5.01 *Availability of Lands*

A. Owner shall furnish the Site. Owner shall notify Contractor in writing of any encumbrances or restrictions not of general application but specifically related to use of the Site with which Contractor must comply in performing the Work.

B. Deleted in its entirety.

C. Contractor shall provide for all additional lands and access thereto that may be required for temporary construction facilities, staging, or storage of materials and equipment. Contractor shall have the obligation to restore the additional lands to their original condition.

5.02 *Use of Site and Other Areas*

A. *Limitation on Use of Site and Other Areas*

1. Contractor shall confine construction equipment, temporary construction facilities, the storage of materials and equipment, and the operations of workers to the Site, adjacent areas that Contractor has arranged to use through construction easements or otherwise, and other adjacent areas permitted by Laws and Regulations, and shall not unreasonably encumber the Site and such other adjacent areas with construction equipment or other materials or equipment. Contractor shall assume full responsibility for (a) damage to the Site; (b) damage to any such other adjacent areas used for Contractor's operations; (c) damage to any other adjacent land or areas, or to improvements, structures, utilities, or similar facilities located at such adjacent lands or areas; and (d) for injuries and losses sustained by the owners or occupants of any such land or areas; provided that such damage or injuries result from the performance of the Work or from other actions or conduct of the Contractor or those for which Contractor is responsible.

2. If a damage or injury claim is made by the owner or occupant of any such land or area because of the performance of the Work, or because of other actions or conduct of the Contractor or those for which Contractor is responsible, Contractor shall (a) take immediate corrective or remedial action as required by Paragraph 7.13, or otherwise; (b) promptly attempt to settle the claim as to all parties through negotiations with such owner or occupant, or otherwise resolve the claim by arbitration or other dispute resolution proceeding, or in a court of competent jurisdiction; and (c) to the fullest extent permitted by Laws and Regulations, indemnify and hold harmless Owner and Engineer, and the officers, directors, members, partners, employees, agents, consultants and

Copyright© 2018 National Society of Professional Engineers, American Council of Engineering Companies, and American Society of Civil Engineers. All rights reserved.

subcontractors of each and any of them, from and against any such claim, and against all costs, losses, and damages (including but not limited to all fees and charges of engineers, architects, attorneys, and other professionals and all court or arbitration or other dispute resolution costs) arising out of or relating to any claim or action, legal or equitable, brought by any such owner or occupant against Owner, Engineer, or any other party indemnified hereunder to the extent caused directly or indirectly, in whole or in part by, or based upon, Contractor's performance of the Work, or because of other actions or conduct of the Contractor or those for which Contractor is responsible.

B. *Removal of Debris During Performance of the Work*: During the progress of the Work the Contractor shall keep the Site and other adjacent areas free from accumulations of waste materials, rubbish, and other debris. The Contractor shall prevent paint, mortar, and concrete splatter on concrete sidewalks and asphalt paths. Any such splatter shall be immediately removed so no evidence of splatter remains. All construction debris shall be removed in a timely manner. Surrounding graded and grassed areas shall be regularly magnetically scanned to collect miscellaneous nails and other sharp objects; the Contractor shall remove such objects from the construction site. Removal and disposal of such waste materials, rubbish, and other debris will conform to applicable Laws and Regulations.

C. *Cleaning*: Prior to Substantial Completion of the Work Contractor shall clean the Site and the Work and make it ready for utilization by Owner. At the completion of the Work Contractor shall remove from the Site and adjacent areas all tools, appliances, construction equipment and machinery, and surplus materials and shall restore to original condition all property not designated for alteration by the Contract Documents.

D. *Loading of Structures*: Contractor shall not load nor permit any part of any structure to be loaded in any manner that will endanger the structure, nor shall Contractor subject any part of the Work or adjacent structures or land to stresses or pressures that will endanger them.

5.03 *Subsurface and Physical Conditions*

A. *Reports and Drawings*: The Supplementary Conditions identify:

1. Those reports of explorations and tests of subsurface conditions at or adjacent to the Site that contain Technical Data;

2. Those drawings of existing physical conditions at or adjacent to the Site, including those drawings depicting existing surface or subsurface structures at or adjacent to the Site (except Underground Facilities), that contain Technical Data; and

3. Technical Data contained in such reports and drawings.

B. *Underground Facilities*: Underground Facilities are shown or indicated on the Drawings, pursuant to Paragraph 5.05, and not in the drawings referred to in Paragraph 5.03.A. Information and data regarding the presence or location of Underground Facilities are not intended to be categorized, identified, or defined as Technical Data.

C. *Reliance by Contractor on Technical Data*: Contractor may rely upon the accuracy of the Technical Data expressly identified in the Supplementary Conditions with respect to such reports and drawings, but such reports and drawings are not Contract Documents and shall under no circumstances relieve Contractor from visiting the Site and becoming familiar with

Copyright© 2018 National Society of Professional Engineers, American Council of Engineering Companies, and American Society of Civil Engineers. All rights reserved.

and satisfied as to the general, local, and Site conditions that may affect cost, progress, and performance of the Work. If no such express identification has been made, then Contractor may rely upon the accuracy of the Technical Data as defined in Paragraph 1.01.A.46.b.

D. *Limitations of Other Data and Documents*: Except for such reliance on Technical Data, Contractor may not rely upon or make any claim against Owner or Engineer, or any of their officers, directors, members, partners, employees, agents, consultants, or subcontractors, with respect to:

1. the completeness of such reports and drawings for Contractor's purposes, including, but not limited to, any aspects of the means, methods, techniques, sequences, and procedures of construction to be employed by Contractor, and safety precautions and programs incident thereto;

2. other data, interpretations, opinions, and information contained in such reports or shown or indicated in such drawings;

3. the contents of other Site-related documents made available to Contractor, such as record drawings from other projects at or adjacent to the Site, or Owner's archival documents concerning the Site; or

4. any Contractor interpretation of or conclusion drawn from any Technical Data or any such other data, interpretations, opinions, or information.

5.04 *Differing Subsurface or Physical Conditions*

A. *Notice by Contractor*: If Contractor believes that any subsurface or physical condition that is uncovered or revealed at the Site:

1. is of such a nature as to establish that any Technical Data on which Contractor is entitled to rely as provided in Paragraph 5.03 is materially inaccurate;

2. is of such a nature as to require a change in the Drawings or Specifications;

3. differs materially from that shown or indicated in the Contract Documents; or

4. is of an unusual nature, and differs materially from conditions ordinarily encountered and generally recognized as inherent in work of the character provided for in the Contract Documents;

then Contractor shall, promptly after first becoming aware thereof and before further disturbing the subsurface or physical conditions or performing any Work in connection therewith (except in an emergency as required by Paragraph 7.15), notify Owner and Engineer in writing about such condition within 5 days. Contractor shall not further disturb such condition or perform any Work in connection therewith (except with respect to an emergency) until receipt of a written statement permitting Contractor to do so.

B. *Engineer's Review*: After receipt of written notice as required by the preceding paragraph, Engineer will promptly review the subsurface or physical condition in question; determine whether it is necessary for Owner to obtain additional exploration or tests with respect to the condition; conclude whether the condition falls within any one or more of the differing site condition categories in Paragraph 5.04.A; obtain any pertinent cost or schedule information from Contractor; prepare recommendations to Owner regarding the Contractor's resumption

Copyright© 2018 National Society of Professional Engineers, American Council of Engineering Companies, and American Society of Civil Engineers. All rights reserved.

of Work in connection with the subsurface or physical condition in question and the need for any change in the Drawings or Specifications; and advise Owner in writing of Engineer's findings, conclusions, and recommendations.

C. *Owner's Statement to Contractor Regarding Site Condition*: After receipt of Engineer's written findings, conclusions, and recommendations, Owner shall issue a written statement to Contractor (with a copy to Engineer) regarding the subsurface or physical condition in question, addressing the resumption of Work in connection with such condition, indicating whether any change in the Drawings or Specifications will be made, and adopting or rejecting Engineer's written findings, conclusions, and recommendations, in whole or in part.

D. *Early Resumption of Work*: If at any time Engineer determines that Work in connection with the subsurface or physical condition in question may resume prior to completion of Engineer's review or Owner's issuance of its statement to Contractor, because the condition in question has been adequately documented, and analyzed on a preliminary basis, then the Engineer may at its discretion instruct Contractor to resume such Work.

E. *Possible Price and Times Adjustments*

1. Contractor shall be entitled to an equitable adjustment in Contract Price or Contract Times, to the extent that the existence of a differing subsurface or physical condition, or any related delay, disruption, or interference, causes an increase or decrease in Contractor's cost of, or time required for, performance of the Work; subject, however, to the following:

    a. Such condition must fall within any one or more of the categories described in Paragraph 5.04.A;

    b. With respect to Work that is paid for on a unit price basis, any adjustment in Contract Price will be subject to the provisions of Paragraph 13.03; and,

    c. Contractor's entitlement to an adjustment of the Contract Times is subject to the provisions of Paragraphs 4.05.D and 4.05.E.

2. Contractor shall not be entitled to any adjustment in the Contract Price or Contract Times with respect to a subsurface or physical condition if:

    a. Contractor knew of the existence of such condition at the time Contractor made a commitment to Owner with respect to Contract Price and Contract Times by the submission of a Bid or becoming bound under a negotiated contract, or otherwise;

    b. The existence of such condition reasonably could have been discovered or revealed as a result of any examination, investigation, exploration, test, or study of the Site and contiguous areas expressly required by the Bidding Requirements or Contract Documents to be conducted by or for Contractor prior to Contractor's making such commitment; or

    c. Contractor failed to give the written notice required by Paragraph 5.04.A.

3. If Owner and Contractor agree regarding Contractor's entitlement to and the amount or extent of any adjustment in the Contract Price or Contract Times, then any such adjustment will be set forth in a Change Order.

Copyright© 2018 National Society of Professional Engineers, American Council of Engineering Companies, and American Society of Civil Engineers. All rights reserved.

4. Contractor may submit a Change Proposal regarding its entitlement to or the amount or extent of any adjustment in the Contract Price or Contract Times, no later than 30 days after Owner's issuance of the Owner's written statement to Contractor regarding the subsurface or physical condition in question.

F. *Underground Facilities; Hazardous Environmental Conditions*: Paragraph 5.05 governs rights and responsibilities regarding the presence or location of Underground Facilities. Paragraph 5.06 governs rights and responsibilities regarding Hazardous Environmental Conditions. The provisions of Paragraphs 5.03 and 5.04 are not applicable to the presence or location of Underground Facilities, or to Hazardous Environmental Conditions.

5.05 *Underground Facilities*

A. *Contractor's Responsibilities*: Unless it is otherwise expressly provided in the Supplementary Conditions, the cost of all of the following are included in the Contract Price, and Contractor shall have full responsibility for:

1. reviewing and checking all information and data regarding existing Underground Facilities at the Site;

2. complying with applicable state and local utility damage prevention Laws and Regulations;

3. verifying the actual location of those Underground Facilities shown or indicated in the Contract Documents as being within the area affected by the Work, by exposing such Underground Facilities during the course of construction;

4. coordination of the Work with the owners (including Owner) of such Underground Facilities, during construction; and

5. the safety and protection of all existing Underground Facilities at the Site, and repairing any damage thereto resulting from the Work.

B. *Notice by Contractor*: If Contractor believes that an Underground Facility that is uncovered or revealed at the Site was not shown or indicated on the Drawings, or was not shown or indicated on the Drawings with reasonable accuracy, then Contractor shall, promptly after first becoming aware thereof and before further disturbing conditions affected thereby or performing any Work in connection therewith (except in an emergency as required by Paragraph 7.15), notify Owner and Engineer in writing regarding such Underground Facility within 5 days.

C. *Engineer's Review*: Engineer will:

1. promptly review the Underground Facility and conclude whether such Underground Facility was not shown or indicated on the Drawings, or was not shown or indicated with reasonable accuracy;

2. identify and communicate with the owner of the Underground Facility; prepare recommendations to Owner (and if necessary issue any preliminary instructions to Contractor) regarding the Contractor's resumption of Work in connection with the Underground Facility in question;

Copyright© 2018 National Society of Professional Engineers, American Council of Engineering Companies, and American Society of Civil Engineers. All rights reserved.

3. obtain any pertinent cost or schedule information from Contractor; determine the extent, if any, to which a change is required in the Drawings or Specifications to reflect and document the consequences of the existence or location of the Underground Facility; and

4. advise Owner in writing of Engineer's findings, conclusions, and recommendations.

During such time, Contractor shall be responsible for the safety and protection of such Underground Facility.

D. *Owner's Statement to Contractor Regarding Underground Facility*: After receipt of Engineer's written findings, conclusions, and recommendations, Owner shall issue a written statement to Contractor (with a copy to Engineer) regarding the Underground Facility in question addressing the resumption of Work in connection with such Underground Facility, indicating whether any change in the Drawings or Specifications will be made, and adopting or rejecting Engineer's written findings, conclusions, and recommendations in whole or in part.

E. *Early Resumption of Work*: If at any time Engineer determines that Work in connection with the Underground Facility may resume prior to completion of Engineer's review or Owner's issuance of its statement to Contractor, because the Underground Facility in question and conditions affected by its presence have been adequately documented, and analyzed on a preliminary basis, then the Engineer may at its discretion instruct Contractor to resume such Work.

F. *Possible Price and Times Adjustments*

1. Contractor shall be entitled to an equitable adjustment in the Contract Price or Contract Times, to the extent that any existing Underground Facility at the Site that was not shown or indicated on the Drawings, or was not shown or indicated with reasonable accuracy, or any related delay, disruption, or interference, causes an increase or decrease in Contractor's cost of, or time required for, performance of the Work; subject, however, to the following:

   a. With respect to Work that is paid for on a unit price basis, any adjustment in Contract Price will be subject to the provisions of Paragraph 13.03;

   b. Contractor's entitlement to an adjustment of the Contract Times is subject to the provisions of Paragraphs 4.05.D and 4.05.E; and

   c. Contractor gave the notice required in Paragraph 5.05.B.

2. If Owner and Contractor agree regarding Contractor's entitlement to and the amount or extent of any adjustment in the Contract Price or Contract Times, then any such adjustment will be set forth in a Change Order.

3. Contractor may submit a Change Proposal regarding its entitlement to or the amount or extent of any adjustment in the Contract Price or Contract Times, no later than 30 days after Owner's issuance of the Owner's written statement to Contractor regarding the Underground Facility in question.

4. The information and data shown or indicated on the Drawings with respect to existing Underground Facilities at the Site is based on information and data (a) furnished by the owners of such Underground Facilities, or by others, (b) obtained from available records,

Copyright© 2018 National Society of Professional Engineers, American Council of Engineering Companies, and American Society of Civil Engineers. All rights reserved.

or (c) gathered in an investigation conducted in accordance with the current edition of ASCE 38, Standard Guideline for the Collection and Depiction of Existing Subsurface Utility Data, by the American Society of Civil Engineers. If such information or data is incorrect or incomplete, Contractor's remedies are limited to those set forth in this Paragraph 5.05.F.

5.06 *Hazardous Environmental Conditions at Site*

A. *Reports and Drawings*: The Supplementary Conditions identify:

1. those reports known to Owner relating to Hazardous Environmental Conditions that have been identified at or adjacent to the Site;

2. drawings known to Owner relating to Hazardous Environmental Conditions that have been identified at or adjacent to the Site; and

3. Technical Data contained in such reports and drawings.

B. *Reliance by Contractor on Technical Data Authorized*: Contractor may rely upon the accuracy of the Technical Data expressly identified in the Supplementary Conditions with respect to such reports and drawings, but such reports and drawings are not Contract Documents. If no such express identification has been made, then Contractor may rely on the accuracy of the Technical Data as defined in Paragraph 1.01.A.46.b. Except for such reliance on Technical Data, Contractor may not rely upon or make any claim against Owner or Engineer, or any of their officers, directors, members, partners, employees, agents, consultants, or subcontractors, with respect to:

1. the completeness of such reports and drawings for Contractor's purposes, including, but not limited to, any aspects of the means, methods, techniques, sequences and procedures of construction to be employed by Contractor, and safety precautions and programs incident thereto;

2. other data, interpretations, opinions, and information contained in such reports or shown or indicated in such drawings; or

3. any Contractor interpretation of or conclusion drawn from any Technical Data or any such other data, interpretations, opinions or information.

C. Contractor shall not be responsible for removing or remediating any Hazardous Environmental Condition encountered, uncovered, or revealed at the Site unless such removal or remediation is expressly identified in the Contract Documents to be within the scope of the Work.

D. Contractor shall be responsible for controlling, containing, and duly removing all Constituents of Concern brought to the Site by Contractor, Subcontractors, Suppliers, or anyone else for whom Contractor is responsible, and for any associated costs; and for the costs of removing and remediating any Hazardous Environmental Condition created by the presence of any such Constituents of Concern.

E. If Contractor encounters, uncovers, or reveals a Hazardous Environmental Condition whose removal or remediation is not expressly identified in the Contract Documents as being within the scope of the Work, or if Contractor or anyone for whom Contractor is responsible creates

Copyright© 2018 National Society of Professional Engineers, American Council of Engineering Companies, and American Society of Civil Engineers. All rights reserved.

a Hazardous Environmental Condition, then Contractor shall immediately: (1) secure or otherwise isolate such condition; (2) stop all Work in connection with such condition and in any area affected thereby (except in an emergency as required by Paragraph 7.15); and (3) notify Owner and Engineer (and promptly thereafter confirm such notice in writing) within 5 days of first becoming aware of the condition. Owner shall promptly consult with Engineer concerning the necessity for Owner to retain a qualified expert to evaluate such condition or take corrective action, if any. Promptly after consulting with Engineer, Owner shall take such actions as are necessary to permit Owner to timely obtain required permits and provide Contractor the written notice required by Paragraph 5.06.F. If Contractor or anyone for whom Contractor is responsible created the Hazardous Environmental Condition in question, then Owner may remove and remediate the Hazardous Environmental Condition, and impose a set-off against payments to account for the associated costs.

F. Contractor shall not resume Work in connection with such Hazardous Environmental Condition or in any affected area until after Owner has obtained any required permits related thereto, and delivered written notice to Contractor either (1) specifying that such condition and any affected area is or has been rendered safe for the resumption of Work, or (2) specifying any special conditions under which such Work may be resumed safely. An equitable adjustment shall be made in the Contract Price or Contract Time, or both, to the extent that (i) they are attributable to the existence or location of any Hazardous Environmental Condition that was not shown or indicated or not shown or indicated with reasonable accuracy in the Contract Documents or a report listed in the Supplemental Conditions, (ii) Contractor did not know of and could not reasonably have been expected to be aware of or to have anticipated the Hazardous Environmental Conditions, (iii) Contractor did not negligently, recklessly, or intentionally cause the Hazardous Environmental Condition, and (iv) Contractor notifies Owner and Engineer of such condition within 5 days after first becoming aware of such condition.

G. If Owner and Contractor cannot agree as to entitlement to or on the amount or extent, if any, of any adjustment in Contract Price or Contract Times, as a result of such Work stoppage, such special conditions under which Work is agreed to be resumed by Contractor, or any costs or expenses incurred in response to the Hazardous Environmental Condition, then within 30 days of Owner's written notice regarding the resumption of Work, Contractor may submit a Change Proposal, or Owner may impose a set-off. Entitlement to any such adjustment is subject to the provisions of Paragraphs 4.05.D, 4.05.E, 11.07, and 11.08.

H. If, after receipt of such written notice, Contractor does not agree to resume such Work based on a reasonable belief it is unsafe, or does not agree to resume such Work under such special conditions, then Owner may order the portion of the Work that is in the area affected by such condition to be deleted from the Work, following the contractual change procedures in Article 11. Owner may have such deleted portion of the Work performed by Owner's own forces or others in accordance with Article 8.

I. Deleted in its entirety.

J. Deleted in its entirety..

K. Deleted in its entirety.

Copyright© 2018 National Society of Professional Engineers, American Council of Engineering Companies, and American Society of Civil Engineers. All rights reserved.

ARTICLE 6—BONDS AND INSURANCE

6.01 *Performance, Payment, and Other Bonds*

A. Contractor shall furnish a payment and performance bond in accordance with Sec. 255.05, Florida Statutes, in an amount at least equal to the Contract Price, as security for the faithful performance and payment of Contractor's obligations under the Contract. These bonds must remain in effect until one year after the date when final payment becomes due or until completion of the correction period specified in Paragraph 15.08, whichever is later, except as provided otherwise by Laws or Regulations, the terms of a prescribed bond form, the Supplementary Conditions, or other provisions of the Contract. The obligations, duties, responsibilities, and requirements of Contractor set forth in this Contract shall be incorporated into Contractor's performance bond.

B. Contractor shall also furnish such other bonds (if any) as are required by the Supplementary Conditions or other provisions of the Contract.

C. All bonds must be in the form included in the Bidding Documents or otherwise specified by Owner prior to execution of the Contract~~.~~. A bond signed by an agent or attorney-in-fact must be accompanied by a certified copy of that individual's authority to bind the surety. The evidence of authority must show that it is effective on the date the agent or attorney-in-fact signed the accompanying bond. The payment and performance bonds shall be recorded in the public records of Volusia County, Florida.

D. Contractor shall obtain the required bonds from surety companies that are duly licensed or authorized, in Florida, to issue bonds in the required amounts.

E. If the surety on a bond furnished by Contractor is declared bankrupt or becomes insolvent, or the surety ceases to meet the requirements above, then Contractor shall promptly notify Owner and Engineer in writing and shall, within 20 days after the event giving rise to such notification, provide another bond and surety, both of which must comply with the bond and surety requirements above.

F. Prior to the date of commencement as set forth in the Notice to Proceed, if Contractor has failed to obtain a required bond, Owner may exclude the Contractor from the Site and exercise Owner's termination rights under Article 16.

G. Upon request to Owner from any Subcontractor, Supplier, or other person or entity claiming to have furnished labor, services, materials, or equipment used in the performance of the Work, Owner shall provide a copy of the payment bond to such person or entity.

H. Upon request to Contractor from any Subcontractor, Supplier, or other person or entity claiming to have furnished labor, services, materials, or equipment used in the performance of the Work, Contractor shall provide a copy of the payment bond to such person or entity.

6.02 *Insurance—General Provisions*

A. Contractor shall obtain and maintain insurance as required in this article and in the Supplementary Conditions. In the event of any conflict between this Paragraph 6.02 and the specific insurance requirements of Contractor set forth in Supplemental Conditions, the specific requirements in Supplemental Conditions shall govern.

Copyright© 2018 National Society of Professional Engineers, American Council of Engineering Companies, and American Society of Civil Engineers. All rights reserved.

B. All insurance required by the Contract to be purchased and maintained by Contractor shall be obtained from insurance companies that are duly licensed or authorized in the State of Florida to issue insurance policies for the required limits and coverages. Unless a different standard is indicated in the Supplementary Conditions, all companies that provide insurance policies required under this Contract shall have an A.M. Best rating of A-VII or better.

C. Alternative forms of insurance coverage, including but not limited to self-insurance and "Occupational Accident and Excess Employer's Indemnity Policies," are not sufficient to meet the insurance requirements of this Contract, unless expressly allowed in the Supplementary Conditions.

D. Contractor shall deliver to Owner, with copies to each additional insured identified in the Contract, certificates of insurance and endorsements establishing that Contractor has obtained and is maintaining the policies and coverages required by the Contract. Upon request by Owner or any other insured, Contractor shall also furnish other evidence of such required insurance, including but not limited to copies of policies, full disclosure of all relevant exclusions, and evidence of insurance required to be purchased and maintained by Subcontractors or Suppliers. In any documentation furnished under this provision, Contractor, Subcontractors, and Suppliers may block out (redact) (1) any confidential premium or pricing information and (2) any wording specific to a project or jurisdiction other than those applicable to this Contract.

E. Deleted in its entirety.

F. Failure of Owner to demand such certificates or other evidence of the Contractor's full compliance with these insurance requirements, or failure of Owner to identify a deficiency in compliance from the evidence provided, will not be construed as a waiver of the Contractor's obligation to obtain and maintain such insurance.

G. In addition to the liability insurance required to be provided by Contractor, the Owner, at Owner's option, may purchase and maintain Owner's own liability insurance. Owner's liability policies, if any, operate separately and independently from policies required to be provided by Contractor, and Contractor cannot rely upon Owner's liability policies for any of Contractor's obligations to the Owner, Engineer, or third parties.

H. Contractor shall require:

   1. Subcontractors to purchase and maintain worker's compensation, commercial general liability, and other insurance that is appropriate for their participation in the Project, and to name as additional insureds Owner and Engineer (and any other individuals or entities identified in the Supplementary Conditions as additional insureds on Contractor's liability policies) on each Subcontractor's commercial general liability insurance policy; and

   2. Suppliers to purchase and maintain insurance that is appropriate for their participation in the Project.

I. If Contractor does not purchase or maintain the insurance required by the Contract, Contractor shall notify the Owner in writing of such failure to purchase prior to the start of the Work, or of such failure to maintain prior to any change in the required coverage.

Copyright© 2018 National Society of Professional Engineers, American Council of Engineering Companies, and American Society of Civil Engineers. All rights reserved.

J. If Contractor has failed to obtain and maintain required insurance, Contractor's entitlement to enter or remain at the Site will end immediately, and Owner may impose an appropriate set-off against payment for any associated costs (including but not limited to the cost of purchasing necessary insurance coverage), and exercise Owner's termination rights under Article 16.

K. Without prejudice to any other right or remedy, if Contractor has failed to obtain required insurance, the Owner may elect (but is in no way obligated) to obtain equivalent insurance to protect Owner's interests at the expense of the Contactor who was required to provide such coverage, and the Contract Price will be adjusted accordingly.

L. Owner does not represent that insurance coverage and limits established in this Contract necessarily will be adequate to protect Contractor or Contractor's interests. Contractor is responsible for determining whether such coverage and limits are adequate to protect its interests, and for obtaining and maintaining any additional insurance that Contractor deems necessary.

M. The insurance and insurance limits required herein will not be deemed as a limitation on Contractor's liability, or that of its Subcontractors or Suppliers, under the indemnities granted to Owner and other individuals and entities in the Contract or otherwise.

N. All the policies of insurance required to be purchased and maintained under this Contract will contain a provision or endorsement that the coverage afforded will not be canceled, or renewal refused, until at least 10 days prior written notice has been given to the purchasing policyholder. Within three days of receipt of any such written notice, the purchasing policyholder shall provide a copy of the notice to each other insured and Engineer.

6.03 *Contractor's Insurance*

A. *Required Insurance*: Contractor shall purchase and maintain Worker's Compensation, Commercial General Liability, and other insurance pursuant to the specific requirements of the Supplementary Conditions.

B. *General Provisions*: The policies of insurance required by this Paragraph 6.03 as supplemented must:

1. include at least the specific coverages required;

2. be written for not less than the limits provided, or those required by Laws or Regulations, whichever is greater;

3. remain in effect at least until the Work is complete (as set forth in Paragraph 15.06.D), and longer if expressly required elsewhere in this Contract, and at all times thereafter when Contractor may be correcting, removing, or replacing defective Work as a warranty or correction obligation, or otherwise, or returning to the Site to conduct other tasks arising from the Contract;

4. apply with respect to the performance of the Work, whether such performance is by Contractor, any Subcontractor or Supplier, or by anyone directly or indirectly employed by any of them to perform any of the Work, or by anyone for whose acts any of them may be liable;

Copyright© 2018 National Society of Professional Engineers, American Council of Engineering Companies, and American Society of Civil Engineers. All rights reserved.

5. include completed operations coverage:

   a. Such insurance shall remain in effect for 10 years after Substantial Completion.

   b. Contractor shall furnish Owner and each additional insured identified in the Supplementary Conditions to whom a certificate of insurance has been issued, evidence satisfactory to Owner and any such additional insured of continuation of such insurance at final payment.

6.

7. include all necessary endorsements to support the stated requirements.

C. *Additional Insureds*: The Contractor's commercial general liability, automobile liability, employer's liability, umbrella or excess, pollution liability, and unmanned aerial vehicle liability policies, if required by this Contract, must:

1. include and list as additional insureds Owner, State of Florida, Department of Transportation and Engineer, and any individuals or entities identified as additional insureds in the Supplementary Conditions;

2. include coverage for the respective officers, directors, members, partners, employees, and consultants of all such additional insureds;

3. afford primary coverage to these additional insureds for all claims covered thereby (including as applicable those arising from both ongoing and completed operations);

4. not seek contribution from insurance maintained by the additional insured; and

5. as to commercial general liability insurance, apply to additional insureds with respect to liability caused in whole or in part by Contractor's acts or omissions, or the acts and omissions of those working on Contractor's behalf, in the performance of Contractor's operations.

6.04 *Builder's Risk and Other Property Insurance*

A. *Builder's Risk*: Unless otherwise provided in the Supplementary Conditions, Contractor shall purchase and maintain builder's risk insurance upon the Work on a completed value basis, in the amount of the Work's full insurable replacement cost (subject to such deductible amounts as may be provided in the Supplementary Conditions or required by Laws and Regulations). The specific requirements applicable to the builder's risk insurance are set forth in the Supplementary Conditions.

B. *Property Insurance for Facilities of Owner Where Work Will Occur*: Contractor is responsible for obtaining and maintaining property insurance covering each existing structure, building, or facility in which any part of the Work will occur, or to which any part of the Work will attach or be adjoined. Such property insurance will be written on a special perils (all-risk) form, on a replacement cost basis, providing coverage consistent with that required for the builder's risk insurance, and will be maintained until the Work is complete, as set forth in Paragraph 15.06.D. Such policy shall identify both Contractor and Owner as additional insureds. Contractor shall be solely responsible for any deductible.

Copyright© 2018 National Society of Professional Engineers, American Council of Engineering Companies, and American Society of Civil Engineers. All rights reserved.

C. *Property Insurance for Substantially Complete Facilities*: Promptly after Substantial Completion, and before actual occupancy or use of the substantially completed Work, Contractor will obtain property insurance for such substantially completed Work, and maintain such property insurance at least until the Work is complete, as set forth in Paragraph 15.06.D. Such property insurance will be written on a special perils (all-risk) form, on a replacement cost basis, and provide coverage consistent with that required for the builder's risk insurance. The builder's risk insurance may terminate upon written confirmation of Contractor's procurement of such property insurance.

D. *Partial Occupancy or Use by Owner*: If Owner will occupy or use a portion or portions of the Work prior to Substantial Completion of all the Work, as provided in Paragraph 15.04, then Owner through Contractor will provide advance notice of such occupancy or use to the builder's risk or all-risk insurer, and Contractor shall obtain an occupancy or use endorsement consenting to the continuation of coverage prior to Owner commencing such partial occupancy or use.

E. *Insurance of Other Property; Additional Insurance*: If the express insurance provisions of the Contract do not require or address the insurance of a property item or interest, then the entity or individual owning such property item will be responsible for insuring it. If Contractor elects to obtain other special insurance to be included in or supplement the builder's risk or property insurance policies provided under this Paragraph 6.04, it may do so at Contractor's expense.

6.05 *Property Losses; Subrogation*

A. The builder's risk insurance policy purchased and maintained in accordance with Paragraph 6.04 (or an installation floater policy if authorized by the Supplementary Conditions), will contain provisions to the effect that in the event of payment of any loss or damage the insurer will have no rights of recovery against any insureds thereunder, or against Engineer or its consultants, or their officers, directors, members, partners, employees, agents, consultants, or subcontractors.

1. Owner and Contractor waive all rights against each other and the respective officers, directors, members, partners, employees, agents, consultants, and subcontractors of each and any of them, for all losses and damages caused by, arising out of, or resulting from any of the perils, risks, or causes of loss covered by such policies and any other property insurance applicable to the Work; and, in addition, waive all such rights against Engineer, its consultants, all individuals or entities identified in the Supplementary Conditions as builder's risk or installation floater insureds, and the officers, directors, members, partners, employees, agents, consultants, and subcontractors of each and any of them, under such policies for losses and damages so caused.

2. None of the above waivers extends to the rights that any party making such waiver may have to the proceeds of insurance held by Contractor as trustee or fiduciary, or otherwise payable under any policy so issued.

B. Deleted in its entirety.

1. Deleted in its entirety.

C. Deleted in its entirety.

Copyright© 2018 National Society of Professional Engineers, American Council of Engineering Companies, and American Society of Civil Engineers. All rights reserved.

D. Contractor shall be responsible for assuring that each Subcontract contains provisions whereby the Subcontractor waives all rights against Owner, Contractor, all individuals or entities identified in the Supplementary Conditions as insureds, the Engineer and its consultants, and the officers, directors, members, partners, employees, agents, consultants, and subcontractors of each and any of them, for all losses and damages caused by, arising out of, relating to, or resulting from fire or other peril, risk, or cause of loss covered by builder's risk insurance, installation floater, and any other property insurance applicable to the Work.

6.06 *Receipt and Application of Property Insurance Proceeds*

A. Any insured loss under the builder's risk and other policies of property insurance required by Paragraph 6.04 will be adjusted and settled with the named insured that purchased the policy. Such named insured shall act as fiduciary for the other insureds, and give notice to such other insureds that adjustment and settlement of a claim is in progress. Any other insured may state its position regarding a claim for insured loss in writing within 15 days after notice of such claim.

B. Proceeds for such insured losses may be made payable by the insurer either jointly to multiple insureds, or to the named insured that purchased the policy in its own right and as fiduciary for other insureds, subject to the requirements of any applicable mortgage clause. A named insured receiving insurance proceeds under the builder's risk and other policies of insurance required by Paragraph 6.04 shall maintain such proceeds in a segregated account, and distribute such proceeds in accordance with such agreement as the parties in interest may reach, or as otherwise required under the dispute resolution provisions of this Contract or applicable Laws and Regulations.

C. If no other special agreement is reached, Contractor shall repair or replace the damaged Work, using allocated insurance proceeds.

D. Owner, at its sole discretion, may elect to fund the costs associated with any property insurance claim, excluding the deductible, and seek reimbursement from Contractor's policy that identifies both Contractor and Owner as named insureds. If Owner exercises this right, it shall have sole authority to settle and adjust any claim and receive reimbursement under the policy with the proceeds made payable to Owner. Contractor shall have the obligation to cooperate and comply with all terms and provisions of the policy and its failure to do so shall constitute a material breach of the Contract. If Owner does not elect this right, Contractor shall be required to fund the costs associated with any property insurance claim and seek reimbursement under the policy.

E. In the event of any conflict between this Paragraph 6.06 and the specific insurance requirements of Contractor set forth in the Supplemental Conditions, the specific insurance requirements in the Supplemental Conditions shall govern.

ARTICLE 7—CONTRACTOR'S RESPONSIBILITIES

7.01 *Contractor's Means and Methods of Construction*

A. Contractor shall be solely responsible for the means, methods, techniques, sequences, and procedures of construction.

Copyright© 2018 National Society of Professional Engineers, American Council of Engineering Companies, and American Society of Civil Engineers. All rights reserved.

B. If the Contract Documents note, or Contractor determines, that professional engineering or other design services are needed to carry out Contractor's responsibilities for construction means, methods, techniques, sequences, and procedures, or for Site safety, then Contractor shall cause such services to be provided by a properly licensed design professional, at Contractor's expense. Such services are not Owner-delegated professional design services under this Contract, and neither Owner nor Engineer has any responsibility with respect to (1) Contractor's determination of the need for such services, (2) the qualifications or licensing of the design professionals retained or employed by Contractor, (3) the performance of such services, or (4) any errors, omissions, or defects in such services.

7.02 *Supervision and Superintendence*

A. Contractor shall supervise, inspect, and direct the Work competently and efficiently, devoting such attention thereto and applying such skills and expertise as may be necessary to perform the Work in accordance with the Contract Documents.

B. At all times during the progress of the Work, Contractor shall assign a competent resident superintendent who will not be replaced without written notice to Owner and Engineer except under extraordinary circumstances.

7.03 *Labor; Working Hours*

A. Contractor shall provide competent, suitably qualified personnel to survey and lay out the Work and perform construction as required by the Contract Documents. Contractor shall maintain good discipline and order at the Site.

B. Contractor shall be fully responsible to Owner and Engineer for all acts and omissions of Contractor's employees; of Suppliers and Subcontractors, and their employees; and of any other individuals or entities performing or furnishing any of the Work, just as Contractor is responsible for Contractor's own acts and omissions. The Contractor agrees to remove from the Project an employee, Subcontractor, or Subcontractor employee that commits any breach of the Contract Documents or any breach of the Owner's written rules and regulations regarding jobsite conduct.

C. The Contractor shall enforce strict discipline and good order among the Contractor's employees and other persons carrying out the Work. Contractor shall not permit employment of unfit persons or persons not properly skilled in tasks assigned to them. The Contractor shall require all construction personnel to maintain a neat general appearance at all times. Shirts, trousers and proper shoes are required apparel. The display of vulgar words, signs or figures is prohibited. Sandals and flip-flops are prohibited on the Project site. The use of radios, tape players, CD players, boom boxes, sound producing devices and the like are prohibited on the Project site. The Contractor shall not be permitted to use restrooms or other sanitary facilities within the Owner's existing buildings or on-site facilities.

D. Except as otherwise required for the safety or protection of persons or the Work or property at the Site or adjacent thereto, and except as otherwise stated in the Contract Documents, all Work at the Site will be performed during regular working hours, Monday through Friday. Contractor will not perform Work on a Saturday, Sunday, or any legal holiday. Contractor may perform Work outside regular working hours or on Saturdays, Sundays, or legal holidays only with Owner's written consent, which will not be unreasonably withheld.

Copyright© 2018 National Society of Professional Engineers, American Council of Engineering Companies, and American Society of Civil Engineers. All rights reserved.

7.04 *Services, Materials, and Equipment*

A. Unless otherwise specified in the Contract Documents, Contractor shall provide and assume full responsibility for all services, materials, equipment, labor, transportation, construction equipment and machinery, tools, appliances, fuel, power, light, heat, telephone, water, sanitary facilities, temporary facilities, and all other facilities and incidentals necessary for the performance, testing, start up, and completion of the Work, whether or not such items are specifically called for in the Contract Documents.

B. All materials and equipment incorporated into the Work must be new and of good quality, except as otherwise provided in the Contract Documents. All special warranties and guarantees required by the Specifications will expressly run to the benefit of Owner. If required by Engineer, Contractor shall furnish satisfactory evidence (including reports of required tests) as to the source, kind, and quality of materials and equipment.

C. All materials and equipment must be stored, applied, installed, connected, erected, protected, used, cleaned, and conditioned in accordance with instructions of the applicable Supplier, except as otherwise may be provided in the Contract Documents.

7.05 *"Or Equals"*

A. *Contractor's Request; Governing Criteria*: Whenever an item of equipment or material is specified or described in the Contract Documents by using the names of one or more proprietary items or specific Suppliers, the Contract Price has been based upon Contractor furnishing such item as specified. The specification or description of such an item is intended to establish the type, function, appearance, and quality required. Unless the specification or description contains or is followed by words reading that no like, equivalent, or "or equal" item is permitted, Contractor may request that Engineer authorize the use of other items of equipment or material, or items from other proposed Suppliers, under the circumstances described below.

1. If Engineer in its sole discretion determines that an item of equipment or material proposed by Contractor is functionally equal to that named and sufficiently similar so that no change in related Work will be required, Engineer will deem it an "or equal" item. For the purposes of this paragraph, a proposed item of equipment or material will be considered functionally equal to an item so named if:

    a. in the exercise of reasonable judgment Engineer determines that the proposed item:

        1) is at least equal in materials of construction, quality, durability, appearance, strength, and design characteristics;

        2) will reliably perform at least equally well the function and achieve the results imposed by the design concept of the completed Project as a functioning whole;

        3) has a proven record of performance and availability of responsive service; and

        4) is not objectionable to Owner.

    b. Contractor certifies that, if the proposed item is approved and incorporated into the Work:

        1) there will be no increase in cost to the Owner or increase in Contract Times; and

Copyright© 2018 National Society of Professional Engineers, American Council of Engineering Companies, and American Society of Civil Engineers. All rights reserved.

2) the item will conform substantially to the detailed requirements of the item named in the Contract Documents.

B. *Contractor's Expense*: Contractor shall provide all data in support of any proposed "or equal" item at Contractor's expense.

C. *Engineer's Evaluation and Determination*: Engineer will be allowed a reasonable time to evaluate each "or-equal" request. Engineer may require Contractor to furnish additional data about the proposed "or-equal" item. Engineer will be the sole judge of acceptability. No "or-equal" item will be ordered, furnished, installed, or utilized until Engineer's review is complete and Engineer determines that the proposed item is an "or-equal," which will be evidenced by an approved Shop Drawing or other written communication. Engineer will advise Contractor in writing of any negative determination.

D. *Effect of Engineer's Determination*: Neither approval nor denial of an "or-equal" request will result in any change in Contract Price. The Engineer's denial of an "or-equal" request will be final and binding, and may not be reversed through an appeal under any provision of the Contract.

E. *Treatment as a Substitution Request*: If Engineer determines that an item of equipment or material proposed by Contractor does not qualify as an "or-equal" item, Contractor may request that Engineer consider the item a proposed substitute pursuant to Paragraph 7.06.

7.06 *Substitutes*

A. *Contractor's Request; Governing Criteria*: Unless the specification or description of an item of equipment or material required to be furnished under the Contract Documents contains or is followed by words reading that no substitution is permitted, Contractor may request that Engineer authorize the use of other items of equipment or material under the circumstances described below. To the extent possible such requests must be made before commencement of related construction at the Site.

1. Contractor shall submit sufficient information as provided below to allow Engineer to determine if the item of material or equipment proposed is functionally equivalent to that named and an acceptable substitute therefor. Engineer will not accept requests for review of proposed substitute items of equipment or material from anyone other than Contractor.

2. The requirements for review by Engineer will be as set forth in Paragraph 7.06.B, as supplemented by the Specifications, and as Engineer may decide is appropriate under the circumstances.

3. Contractor shall make written application to Engineer for review of a proposed substitute item of equipment or material that Contractor seeks to furnish or use. The application:

a. will certify that the proposed substitute item will:

1) perform adequately the functions and achieve the results called for by the general design;

2) be similar in substance to the item specified; and

3) be suited to the same use as the item specified.

Copyright© 2018 National Society of Professional Engineers, American Council of Engineering Companies, and American Society of Civil Engineers. All rights reserved.

b. will state:

1) the extent, if any, to which the use of the proposed substitute item will necessitate a change in Contract Times;

2) whether use of the proposed substitute item in the Work will require a change in any of the Contract Documents (or in the provisions of any other direct contract with Owner for other work on the Project) to adapt the design to the proposed substitute item; and

3) whether incorporation or use of the proposed substitute item in connection with the Work is subject to payment of any license fee or royalty.

c. will identify:

1) all variations of the proposed substitute item from the item specified; and

2) available engineering, sales, maintenance, repair, and replacement services.

d. will contain an itemized estimate of all costs or credits that will result directly or indirectly from use of such substitute item, including but not limited to changes in Contract Price, shared savings, costs of redesign, and claims of other contractors affected by any resulting change.

B. *Engineer's Evaluation and Determination*: Engineer will be allowed a reasonable time to evaluate each substitute request, and to obtain comments and direction from Owner. Engineer may require Contractor to furnish additional data about the proposed substitute item. Engineer will be the sole judge of acceptability. No substitute will be ordered, furnished, installed, or utilized until Engineer's review is complete and Engineer determines that the proposed item is an acceptable substitute. Engineer's determination will be evidenced by a Field Order or a proposed Change Order accounting for the substitution itself and all related impacts, including changes in Contract Price or Contract Times. Engineer will advise Contractor in writing of any negative determination.

C. *Special Guarantee*: Owner may require Contractor to furnish at Contractor's expense a special performance guarantee or other surety with respect to any substitute.

D. *Reimbursement of Engineer's Cost*: Engineer will record Engineer's costs in evaluating a substitute proposed or submitted by Contractor. Whether or not Engineer approves a substitute so proposed or submitted by Contractor, Contractor shall reimburse Owner for the reasonable charges of Engineer for evaluating each such proposed substitute. Contractor shall also reimburse Owner for the reasonable charges of Engineer for making changes in the Contract Documents (or in the provisions of any other direct contract with Owner) resulting from the acceptance of each proposed substitute.

E. *Contractor's Expense*: Contractor shall provide all data in support of any proposed substitute at Contractor's expense.

F. *Effect of Engineer's Determination*: If Engineer approves the substitution request, Contractor shall execute the proposed Change Order and proceed with the substitution. The Engineer's denial of a substitution request will be final and binding, and may not be reversed through an appeal under any provision of the Contract. Contractor may challenge the scope of

Copyright© 2018 National Society of Professional Engineers, American Council of Engineering Companies, and American Society of Civil Engineers. All rights reserved.

reimbursement costs imposed under Paragraph 7.06.D, by timely submittal of a Change Proposal.

7.07 *Concerning Subcontractors and Suppliers*

A. Contractor may retain Subcontractors and Suppliers for the performance of parts of the Work. Such Subcontractors and Suppliers must be acceptable to Owner. The Contractor's retention of a Subcontractor or Supplier for the performance of parts of the Work will not relieve Contractor's obligation to Owner to perform and complete the Work in accordance with the Contract Documents.

B. Contractor shall retain specific Subcontractors and Suppliers for the performance of designated parts of the Work if required by the Contract to do so.

C. Subsequent to the submittal of Contractor's Bid or final negotiation of the terms of the Contract, Owner may not require Contractor to retain any Subcontractor or Supplier to furnish or perform any of the Work against which Contractor has reasonable objection.

D. Prior to entry into any binding subcontract or purchase order, Contractor shall submit to Owner the identity of the proposed Subcontractor or Supplier (unless Owner has already deemed such proposed Subcontractor or Supplier acceptable during the bidding process or otherwise). Such proposed Subcontractor or Supplier shall be deemed acceptable to Owner unless Owner raises a substantive, reasonable objection within 5 days.

E. Owner may require the replacement of any Subcontractor or Supplier. Owner also may require Contractor to retain specific replacements; provided, however, that Owner may not require a replacement to which Contractor has a reasonable objection. If Contractor has submitted the identity of certain Subcontractors or Suppliers for acceptance by Owner, and Owner has accepted it (either in writing or by failing to make written objection thereto), then Owner may subsequently revoke the acceptance of any such Subcontractor or Supplier so identified solely on the basis of substantive, reasonable objection after due investigation. Contractor shall submit an acceptable replacement for the rejected Subcontractor or Supplier.

F. If Owner requires the replacement of any Subcontractor or Supplier retained by Contractor to perform any part of the Work, then Contractor shall be entitled to an adjustment in Contract Price or Contract Times, with respect to the replacement; and Contractor shall initiate a Change Proposal for such adjustment within 30 days of Owner's requirement of replacement.

G. No acceptance by Owner of any such Subcontractor or Supplier, whether initially or as a replacement, will constitute a waiver of the right of Owner to the completion of the Work in accordance with the Contract Documents.

H. On a monthly basis, Contractor shall submit to Engineer a complete list of all Subcontractors and Suppliers having a direct contract with Contractor, and of all other Subcontractors and Suppliers known to Contractor at the time of submittal.

I. Contractor shall be solely responsible for scheduling and coordinating the work of Subcontractors and Suppliers.

Copyright© 2018 National Society of Professional Engineers, American Council of Engineering Companies, and American Society of Civil Engineers. All rights reserved.

J. The divisions and sections of the Specifications and the identifications of any Drawings do not control Contractor in dividing the Work among Subcontractors or Suppliers, or in delineating the Work to be performed by any specific trade.

K. All Work performed for Contractor by a Subcontractor or Supplier must be pursuant to an appropriate contractual agreement that specifically binds the Subcontractor or Supplier to the applicable terms and conditions of the Contract for the benefit of Owner and Engineer.

L. Owner may furnish to any Subcontractor or Supplier, to the extent practicable, information about amounts paid to Contractor for Work performed for Contractor by the Subcontractor or Supplier.

M. Contractor shall restrict all Subcontractors and Suppliers from communicating with Engineer or Owner, except through Contractor or in case of an emergency, or as otherwise expressly allowed in this Contract.

7.08 *Patent Fees and Royalties*

A. Contractor shall pay all license fees and royalties and assume all costs incident to the use in the performance of the Work or the incorporation in the Work of any invention, design, process, product, or device which is the subject of patent rights or copyrights held by others. If an invention, design, process, product, or device is specified in the Contract Documents for use in the performance of the Work and if, to the actual knowledge of Owner or Engineer, its use is subject to patent rights or copyrights calling for the payment of any license fee or royalty to others, the existence of such rights will be disclosed in the Contract Documents.

B. Deleted in its entirety.

C. Deleted in its entirety.

7.09 *Permits*

A. Unless otherwise provided in the Contract Documents, Contractor shall obtain and pay for all construction permits, licenses, and certificates of occupancy. Owner shall assist Contractor, when necessary, in obtaining such permits and licenses. Contractor shall pay all governmental charges and inspection fees necessary for the prosecution of the Work which are applicable at the time of the submission of Contractor's Bid (or when Contractor became bound under a negotiated contract). Owner shall pay all charges of utility owners for connections for providing permanent service to the Work.

7.10 *Taxes*

A. Contractor shall pay all sales, consumer, use, and other similar taxes required to be paid by Contractor in accordance with the Laws and Regulations of the place of the Project which are applicable during the performance of the Work.

7.11 *Laws and Regulations*

A. Contractor shall give all notices required by and shall comply with all Laws and Regulations applicable to the performance of the Work. Neither Owner nor Engineer shall be responsible for monitoring Contractor's compliance with any Laws or Regulations.

Copyright© 2018 National Society of Professional Engineers, American Council of Engineering Companies, and American Society of Civil Engineers. All rights reserved.

B. If Contractor performs any Work or takes any other action knowing or having reason to know that it is contrary to Laws or Regulations, Contractor shall bear all resulting costs and losses, and shall indemnify and hold harmless Owner and Engineer, and the officers, directors, members, partners, employees, agents, consultants, and subcontractors of each and any of them, from and against all claims, costs, losses, and damages (including but not limited to all fees and charges of engineers, architects, attorneys, and other professionals and all court or arbitration or other dispute resolution costs) arising out of or relating to such Work or other action. It is not Contractor's responsibility to make certain that the Work described in the Contract Documents is in accordance with Laws and Regulations, but this does not relieve Contractor of its obligations under Paragraph 3.03.

C. Owner or Contractor may give written notice to the other party of any changes after the submission of Contractor's Bid (or after the date when Contractor became bound under a negotiated contract) in Laws or Regulations having an effect on the cost or time of performance of the Work, including but not limited to changes in Laws or Regulations having an effect on procuring permits and on sales, use, value-added, consumption, and other similar taxes. If Owner and Contractor are unable to agree on entitlement to or on the amount or extent, if any, of any adjustment in Contract Price or Contract Times resulting from such changes, then within 30 days of such written notice Contractor may submit a Change Proposal, or Owner may initiate a Claim.

7.12 *Record Documents*

A. Contractor shall maintain in a safe place at the Site one printed record copy of all Drawings, Specifications, Addenda, Change Orders, Work Change Directives, Field Orders, written interpretations and clarifications, and approved Shop Drawings. Contractor shall keep such record documents in good order and annotate them to show changes made during construction. These record documents, together with all approved Samples, will be available to Engineer for reference. Upon completion of the Work, Contractor shall deliver these record documents to Engineer.

7.13 *Safety and Protection*

A. Contractor shall be solely responsible for initiating, maintaining, and supervising all safety precautions and programs in connection with the Work. Such responsibility does not relieve Subcontractors of their responsibility for the safety of persons or property in the performance of their work, nor for compliance with applicable safety Laws and Regulations.

B. Contractor shall designate a qualified and experienced safety representative whose duties and responsibilities are the prevention of Work-related accidents and the maintenance and supervision of safety precautions and programs.

C. Contractor shall take all necessary precautions for the safety of, and shall provide the necessary protection to prevent damage, injury, or loss to:

1. all persons on the Site or who may be affected by the Work;

2. all the Work and materials and equipment to be incorporated therein, whether in storage on or off the Site; and

Copyright© 2018 National Society of Professional Engineers, American Council of Engineering Companies, and American Society of Civil Engineers. All rights reserved.

3. other property at the Site or adjacent thereto, including trees, shrubs, lawns, walks, pavements, roadways, structures, other work in progress, utilities, and Underground Facilities not designated for removal, relocation, or replacement in the course of construction.

D. All damage, injury, or loss to any property referred to in Paragraph 7.13.C.2 or 7.13.C.3 caused, directly or indirectly, in whole or in part, by Contractor, any Subcontractor, Supplier, or any other individual or entity directly or indirectly employed by any of them to perform any of the Work, or anyone for whose acts any of them may be liable, shall be remedied by Contractor at its expense (except damage or loss attributable to the fault of Drawings or Specifications or to the acts or omissions of Owner or Engineer or anyone employed by any of them, or anyone for whose acts any of them may be liable, and not attributable, directly or indirectly, in whole or in part, to the fault or negligence of Contractor or any Subcontractor, Supplier, or other individual or entity directly or indirectly employed by any of them).

E. Contractor shall comply with all applicable Laws and Regulations relating to the safety of persons or property, or to the protection of persons or property from damage, injury, or loss; and shall erect and maintain all necessary safeguards for such safety and protection.

F. Contractor shall notify Owner; the owners of adjacent property; the owners of Underground Facilities and other utilities (if the identity of such owners is known to Contractor); and other contractors and utility owners performing work at or adjacent to the Site, in writing, when Contractor knows that prosecution of the Work may affect them, and shall cooperate with them in the protection, removal, relocation, and replacement of their property or work in progress.

G. Contractor shall comply with the applicable requirements of Owner's safety programs, if any. Any Owner's safety programs that are applicable to the Work are identified or included in the Supplementary Conditions or Specifications.

H. Contractor shall inform Owner and Engineer of the specific requirements of Contractor's safety program with which Owner's and Engineer's employees and representatives must comply while at the Site.

I. Contractor's duties and responsibilities for safety and protection will continue until all the Work is completed, Engineer has issued a written notice to Owner and Contractor in accordance with Paragraph 15.06.C that the Work is acceptable, and Contractor has left the Site (except as otherwise expressly provided in connection with Substantial Completion).

J. Contractor's duties and responsibilities for safety and protection will resume whenever Contractor or any Subcontractor or Supplier returns to the Site to fulfill warranty or correction obligations, or to conduct other tasks arising from the Contract Documents.

7.14 *Hazard Communication Programs*

A. Contractor shall be responsible for coordinating any exchange of safety data sheets (formerly known as material safety data sheets) or other hazard communication information required to be made available to or exchanged between or among employers at the Site in accordance with Laws or Regulations.

Copyright© 2018 National Society of Professional Engineers, American Council of Engineering Companies, and American Society of Civil Engineers. All rights reserved.

7.15 *Emergencies*

A. In emergencies affecting the safety or protection of persons or the Work or property at the Site or adjacent thereto, Contractor is obligated to act to prevent damage, injury, or loss. Contractor shall give Engineer prompt written notice if Contractor believes that any significant changes in the Work or variations from the Contract Documents have been caused by an emergency, or are required as a result of Contractor's response to an emergency. If Engineer determines that a change in the Contract Documents is required because of an emergency or Contractor's response, a Work Change Directive or Change Order will be issued.

7.16 *Submittals*

A. *Shop Drawing and Sample Requirements*

1. Before submitting a Shop Drawing or Sample, Contractor shall:

a. review and coordinate the Shop Drawing or Sample with other Shop Drawings and Samples and with the requirements of the Work and the Contract Documents;

b. determine and verify:

1) all field measurements, quantities, dimensions, specified performance and design criteria, installation requirements, materials, catalog numbers, and similar information with respect to the Submittal;

2) the suitability of all materials and equipment offered with respect to the indicated application, fabrication, shipping, handling, storage, assembly, and installation pertaining to the performance of the Work; and

3) all information relative to Contractor's responsibilities for means, methods, techniques, sequences, and procedures of construction, and safety precautions and programs incident thereto;

c. confirm that the Submittal is complete with respect to all related data included in the Submittal.

2. Each Shop Drawing or Sample must bear a stamp or specific written certification that Contractor has satisfied Contractor's obligations under the Contract Documents with respect to Contractor's review of that Submittal, and that Contractor approves the Submittal.

3. With each Shop Drawing or Sample, Contractor shall give Engineer specific written notice of any variations that the Submittal may have from the requirements of the Contract Documents. This notice must be set forth in a written communication separate from the Submittal; and, in addition, in the case of a Shop Drawing by a specific notation made on the Shop Drawing itself.

B. *Submittal Procedures for Shop Drawings and Samples*: Contractor shall label and submit Shop Drawings and Samples to Engineer for review and approval in accordance with the accepted Schedule of Submittals.

1. *Shop Drawings*

a. Contractor shall submit the number of copies required in the Specifications.

Copyright© 2018 National Society of Professional Engineers, American Council of Engineering Companies, and American Society of Civil Engineers. All rights reserved.

b. Data shown on the Shop Drawings must be complete with respect to quantities, dimensions, specified performance and design criteria, materials, and similar data to show Engineer the services, materials, and equipment Contractor proposes to provide, and to enable Engineer to review the information for the limited purposes required by Paragraph 7.16.C.

2. *Samples*

a. Contractor shall submit the number of Samples required in the Specifications.

b. Contractor shall clearly identify each Sample as to material, Supplier, pertinent data such as catalog numbers, the use for which intended and other data as Engineer may require to enable Engineer to review the Submittal for the limited purposes required by Paragraph 7.16.C.

3. Where a Shop Drawing or Sample is required by the Contract Documents or the Schedule of Submittals, any related Work performed prior to Engineer's review and approval of the pertinent submittal will be at the sole expense and responsibility of Contractor.

C. *Engineer's Review of Shop Drawings and Samples*

1. Engineer will provide timely review of Shop Drawings and Samples in accordance with the accepted Schedule of Submittals. Engineer's review and approval will be only to determine if the items covered by the Submittals will, after installation or incorporation in the Work, comply with the requirements of the Contract Documents, and be compatible with the design concept of the completed Project as a functioning whole as indicated by the Contract Documents.

2. Engineer's review and approval will not extend to means, methods, techniques, sequences, or procedures of construction, or to safety precautions or programs incident thereto.

3. Engineer's review and approval of a separate item as such will not indicate approval of the assembly in which the item functions.

4. Engineer's review and approval of a Shop Drawing or Sample will not relieve Contractor from responsibility for any variation from the requirements of the Contract Documents unless Contractor has complied with the requirements of Paragraph 7.16.A.3 and Engineer has given written approval of each such variation by specific written notation thereof incorporated in or accompanying the Shop Drawing or Sample. Engineer will document any such approved variation from the requirements of the Contract Documents in a Field Order or other appropriate Contract modification.

5. Engineer's review and approval of a Shop Drawing or Sample will not relieve Contractor from responsibility for complying with the requirements of Paragraphs 7.16.A and B.

6. Engineer's review and approval of a Shop Drawing or Sample, or of a variation from the requirements of the Contract Documents, will not, under any circumstances, change the Contract Times or Contract Price, unless such changes are included in a Change Order.

7. Neither Engineer's receipt, review, acceptance, or approval of a Shop Drawing or Sample will result in such item becoming a Contract Document.

Copyright© 2018 National Society of Professional Engineers, American Council of Engineering Companies, and American Society of Civil Engineers. All rights reserved.

8. Contractor shall perform the Work in compliance with the requirements and commitments set forth in approved Shop Drawings and Samples, subject to the provisions of Paragraph 7.16.C.4.

D. *Resubmittal Procedures for Shop Drawings and Samples*

1. Contractor shall make corrections required by Engineer and shall return the required number of corrected copies of Shop Drawings and submit, as required, new Samples for review and approval. Contractor shall direct specific attention in writing to revisions other than the corrections called for by Engineer on previous Submittals.

2. Contractor shall furnish required Shop Drawing and Sample submittals with sufficient information and accuracy to obtain required approval of an item with no more than two resubmittals. Engineer will record Engineer's time for reviewing a third or subsequent resubmittal of a Shop Drawing or Sample, and Contractor shall be responsible for Engineer's charges to Owner for such time. Owner may impose a set-off against payments due Contractor to secure reimbursement for such charges.

3. If Contractor requests a change of a previously approved Shop Drawing or Sample, Contractor shall be responsible for Engineer's charges to Owner for its review time, and Owner may impose a set-off against payments due Contractor to secure reimbursement for such charges, unless the need for such change is beyond the control of Contractor.

E. *Submittals Other than Shop Drawings, Samples, and Owner-Delegated Designs*

1. The following provisions apply to all Submittals other than Shop Drawings, Samples, and Owner-delegated designs:

   a. Contractor shall submit all such Submittals to the Engineer in accordance with the Schedule of Submittals and pursuant to the applicable terms of the Contract Documents.

   b. Engineer will provide timely review of all such Submittals in accordance with the Schedule of Submittals and return such Submittals with a notation of either Accepted or Not Accepted. Any such Submittal that is not returned within the time established in the Schedule of Submittals will be deemed accepted.

   c. Engineer's review will be only to determine if the Submittal is acceptable under the requirements of the Contract Documents as to general form and content of the Submittal.

   d. If any such Submittal is not accepted, Contractor shall confer with Engineer regarding the reason for the non-acceptance, and resubmit an acceptable document.

2. Procedures for the submittal and acceptance of the Progress Schedule, the Schedule of Submittals, and the Schedule of Values are set forth in Paragraphs 2.03. 2.04, and 2.05.

F. Owner-delegated Designs: Submittals pursuant to Owner-delegated designs are governed by the provisions of Paragraph 7.19.

Copyright© 2018 National Society of Professional Engineers, American Council of Engineering Companies, and American Society of Civil Engineers. All rights reserved.

7.17 *Contractor's General Warranty and Guarantee*

A. Contractor warrants and guarantees to Owner that all Work will be in accordance with the Contract Documents and will not be defective. Engineer is entitled to rely on Contractor's warranty and guarantee.

B. Owner's rights under this warranty and guarantee are in addition to, and are not limited by, Owner's rights under the correction period provisions of Paragraph 15.08. The time in which Owner may enforce its warranty and guarantee rights under this Paragraph 7.17 is limited only by applicable Laws and Regulations restricting actions to enforce such rights; provided, however, that after the end of the correction period under Paragraph 15.08:

1. Owner shall give Contractor written notice of any defective Work within 60 days of the discovery that such Work is defective; and

2. Such notice will be deemed the start of an event giving rise to a Claim under Paragraph 12.01.B, such that any related Claim must be brought within 30 days of the notice.

C. Contractor's warranty and guarantee hereunder excludes defects or damage caused by:

1. abuse, or improper modification, maintenance, or operation, by persons other than Contractor, Subcontractors, Suppliers, or any other individual or entity for whom Contractor is responsible; or

2. normal wear and tear under normal usage.

D. Contractor's obligation to perform and complete the Work in accordance with the Contract Documents is absolute. None of the following will constitute an acceptance of Work that is not in accordance with the Contract Documents, a release of Contractor's obligation to perform the Work in accordance with the Contract Documents, or a release of Owner's warranty and guarantee rights under this Paragraph 7.17:

1. Observations by Engineer;

2. Recommendation by Engineer or payment by Owner of any progress or final payment;

3. The issuance of a certificate of Substantial Completion by Engineer or any payment related thereto by Owner;

4. Use or occupancy of the Work or any part thereof by Owner;

5. Any review and approval of a Shop Drawing or Sample submittal;

6. The issuance of a notice of acceptability by Engineer;

7. The end of the correction period established in Paragraph 15.08;

8. Any inspection, test, or approval by others; or

9. Any correction of defective Work by Owner.

E. If the Contract requires the Contractor to accept the assignment of a contract entered into by Owner, then the specific warranties, guarantees, and correction obligations contained in the assigned contract will govern with respect to Contractor's performance obligations to Owner for the Work described in the assigned contract.

Copyright© 2018 National Society of Professional Engineers, American Council of Engineering Companies, and American Society of Civil Engineers. All rights reserved.

7.18 *Indemnification*

A.

To the extent provided by law, Contractor shall indemnify, defend, and hold harmless the Owner and the State of Florida, Department of Transportation, including the Department's officers, agents, and employees, against any actions, claims, or damages arising out of, relating to, or resulting from negligent or wrongful act(s) of Contractor, or any of its officers, agents, or employees, acting within the scope of their office or employment, in connection with the rights granted to or exercised by Contractor.

The foregoing indemnification shall not constitute a waiver of the Department's or Owner's sovereign immunity beyond the limits set forth in Florida Statutes, Section 768.28. Nor shall the same be construed to constitute agreement by Contractor to indemnify City for the negligent acts or omissions of Owner, its officers, agents, or employees, or third parties. Nor shall the same be construed to constitute agreement by Contractor to indemnify the Department for the negligent acts or omissions of the Department, its officers, agents, or employees, or third parties. This indemnification shall survive the termination of this Agreement.

B. The Contractor acknowledges the limit of dollar amount of Contractor's indemnity obligations required by the Contract specifically for those claims caused in whole or in part by the Owner or Engineer shall be $1,000,000 or the Contract Sum of the Project, whichever is more. The parties agree that the indemnity provided herein bears a reasonable commercial relationship to the Contract and is incorporated by this reference into the Project specifications and bid documents. if any.

C. Notwithstanding the above and without monetary limitation, the Contractor hereby indemnifies and holds harmless the Owner, their officers and employees, from liabilities, damages, losses and costs, including, but not limited to, reasonable attorney's fees, to the extent caused by negligence, recklessness, or intentional wrongful misconduct of the Contractor and persons employed or utilized by the Contractor in the performance of the Contract.

D. Contractor agrees and understands that its obligation to indemnify, hold harmless, and defend as set forth in Paragraphs 7.18.A and B. above includes without limitation, claims, losses, etc., for personal injury, death, property damage, Hazardous Environmental Conditions, infringement of patent rights or copyrights incidental to the use or incorporation in the performance of the Work, etc., to the extent caused by the negligence, recklessness, or intentional misconduct of Contractor and the persons or entities employed or utilized by Contractor in the performance of the Contract.

Copyright© 2018 National Society of Professional Engineers, American Council of Engineering Companies, and American Society of Civil Engineers. All rights reserved.

7.19 *Delegation of Professional Design Services*

A. Owner may require Contractor to provide professional design services for a portion of the Work by express delegation in the Contract Documents. Such delegation will specify the performance and design criteria that such services must satisfy, and the Submittals that Contractor must furnish to Engineer with respect to the Owner-delegated design.

B. Contractor shall cause such Owner-delegated professional design services to be provided pursuant to the professional standard of care by a properly licensed design professional, whose signature and seal must appear on all drawings, calculations, specifications, certifications, and Submittals prepared by such design professional. Such design professional must issue all certifications of design required by Laws and Regulations.

C. If a Shop Drawing or other Submittal related to the Owner-delegated design is prepared by Contractor, a Subcontractor, or others for submittal to Engineer, then such Shop Drawing or other Submittal must bear the written approval of Contractor's design professional when submitted by Contractor to Engineer.

D. Owner and Engineer shall be entitled to rely upon the adequacy, accuracy, and completeness of the services, certifications, and approvals performed or provided by the design professionals retained or employed by Contractor under an Owner-delegated design, subject to the professional standard of care and the performance and design criteria stated in the Contract Documents.

E. Pursuant to this Paragraph 7.19, Engineer's review, approval, and other determinations regarding design drawings, calculations, specifications, certifications, and other Submittals furnished by Contractor pursuant to an Owner-delegated design will be only for the following limited purposes:

1. Checking for conformance with the requirements of this Paragraph 7.19;

2. Confirming that Contractor (through its design professionals) has used the performance and design criteria specified in the Contract Documents; and

3. Establishing that the design furnished by Contractor is consistent with the design concept expressed in the Contract Documents.

F. Contractor shall not be responsible for the adequacy of performance or design criteria specified by Owner or Engineer.

G. Contractor is not required to provide professional services in violation of applicable Laws and Regulations.

ARTICLE 8—OTHER WORK AT THE SITE

8.01 *Other Work*

A. In addition to and apart from the Work under the Contract Documents, the Owner may perform other work at or adjacent to the Site. Such other work may be performed by Owner's employees, or through contracts between the Owner and third parties. Owner may also arrange to have third-party utility owners perform work on their utilities and facilities at or adjacent to the Site.

Copyright© 2018 National Society of Professional Engineers, American Council of Engineering Companies, and American Society of Civil Engineers. All rights reserved.

B. If Owner performs other work at or adjacent to the Site with Owner's employees, or through contracts for such other work, then Owner shall give Contractor written notice thereof prior to starting any such other work. If Owner has advance information regarding the start of any third-party utility work that Owner has arranged to take place at or adjacent to the Site, Owner shall provide such information to Contractor.

C. Contractor shall afford proper and safe access to the Site to each contractor that performs such other work, each utility owner performing other work, and Owner, if Owner is performing other work with Owner's employees, and provide a reasonable opportunity for the introduction and storage of materials and equipment and the execution of such other work.

D. Contractor shall do all cutting, fitting, and patching of the Work that may be required to properly connect or otherwise make its several parts come together and properly integrate with such other work. Contractor shall not endanger any work of others by cutting, excavating, or otherwise altering such work; provided, however, that Contractor may cut or alter others' work with the written consent of Engineer and the others whose work will be affected.

E. If the proper execution or results of any part of Contractor's Work depends upon work performed by others, Contractor shall inspect such other work and promptly report to Engineer in writing any delays, defects, or deficiencies in such other work that render it unavailable or unsuitable for the proper execution and results of Contractor's Work. Contractor's failure to so report will constitute an acceptance of such other work as fit and proper for integration with Contractor's Work except for latent defects and deficiencies in such other work.

F. The provisions of this article are not applicable to work that is performed by third-party utilities or other third-party entities without a contract with Owner, or that is performed without having been arranged by Owner. If such work occurs, then any related delay, disruption, or interference incurred by Contractor is governed by the provisions of Paragraph 4.05.C.3.

8.02 *Coordination*

A. If Owner intends to contract with others for the performance of other work at or adjacent to the Site, to perform other work at or adjacent to the Site with Owner's employees, or to arrange to have utility owners perform work at or adjacent to the Site, the following will be set forth in the Supplementary Conditions or provided to Contractor prior to the start of any such other work:

1. The identity of the individual or entity that will have authority and responsibility for coordination of the activities among the various contractors;

2. An itemization of the specific matters to be covered by such authority and responsibility; and

3. The extent of such authority and responsibilities.

B. Unless otherwise provided in the Supplementary Conditions, Owner shall have sole authority and responsibility for such coordination.

Copyright© 2018 National Society of Professional Engineers, American Council of Engineering Companies, and American Society of Civil Engineers. All rights reserved.

8.03 *Legal Relationships*

A. If, in the course of performing other work for Owner at or adjacent to the Site, the Owner's employees, any other contractor working for Owner, or any utility owner that Owner has arranged to perform work, causes damage to the Work or to the property of Contractor or its Subcontractors, or delays, disrupts, interferes with, or increases the scope or cost of the performance of the Work, through actions or inaction, then Contractor shall be entitled to an equitable adjustment in the Contract Price or the Contract Times. Contractor must submit any Change Proposal seeking an equitable adjustment in the Contract Price or the Contract Times under this paragraph within 30 days of the damaging, delaying, disrupting, or interfering event. The entitlement to, and extent of, any such equitable adjustment will take into account information (if any) regarding such other work that was provided to Contractor in the Contract Documents prior to the submittal of the Bid or the final negotiation of the terms of the Contract, and any remedies available to Contractor under Laws or Regulations concerning utility action or inaction. When applicable, any such equitable adjustment in Contract Price will be conditioned on Contractor assigning to Owner all Contractor's rights against such other contractor or utility owner with respect to the damage, delay, disruption, or interference that is the subject of the adjustment. Contractor's entitlement to an adjustment of the Contract Times or Contract Price is subject to the provisions of Paragraphs 4.05.D and 4.05.E.

B. Contractor shall take reasonable and customary measures to avoid damaging, delaying, disrupting, or interfering with the work of Owner, any other contractor, or any utility owner performing other work at or adjacent to the Site.

   1. If Contractor fails to take such measures and as a result damages, delays, disrupts, or interferes with the work of any such other contractor or utility owner, then Owner may impose a set-off against payments due Contractor, and assign to such other contractor or utility owner the Owner's contractual rights against Contractor with respect to the breach of the obligations set forth in this Paragraph 8.03.B.

   2. When Owner is performing other work at or adjacent to the Site with Owner's employees, Contractor shall be liable to Owner for damage to such other work, and for the reasonable direct delay, disruption, and interference costs incurred by Owner as a result of Contractor's failure to take reasonable and customary measures with respect to Owner's other work. In response to such damage, delay, disruption, or interference, Owner may impose a set-off against payments due Contractor.

C. If Contractor damages, delays, disrupts, or interferes with the work of any other contractor, or any utility owner performing other work at or adjacent to the Site, through Contractor's failure to take reasonable and customary measures to avoid such impacts, or if any claim arising out of Contractor's actions, inactions, or negligence in performance of the Work at or adjacent to the Site is made by any such other contractor or utility owner against Contractor, Owner, or Engineer, then Contractor shall (1) promptly attempt to settle the claim as to all parties through negotiations with such other contractor or utility owner, or otherwise resolve the claim by arbitration or other dispute resolution proceeding or at law, and (2) indemnify and hold harmless Owner and Engineer, and the officers, directors, members, partners, employees, agents, consultants and subcontractors of each and any of them from and against any such claims, and against all costs, losses, and damages (including but not limited to all

Copyright© 2018 National Society of Professional Engineers, American Council of Engineering Companies, and American Society of Civil Engineers. All rights reserved.

fees and charges of engineers, architects, attorneys, and other professionals and all court or arbitration or other dispute resolution costs) arising out of or relating to such damage, delay, disruption, or interference.

ARTICLE 9—OWNER'S RESPONSIBILITIES

9.01 *Communications to Contractor*

A. Except as otherwise provided in these General Conditions, Owner shall issue all communications to Contractor through Engineer.

9.02 *Replacement of Engineer*

A. Owner may at its discretion appoint an engineer to replace Engineer, provided Contractor makes no reasonable objection to the replacement engineer. The replacement engineer's status under the Contract Documents will be that of the former Engineer.

9.03 *Furnish Data*

A. Owner shall promptly furnish the data required of Owner under the Contract Documents.

9.04 *Pay When Due*

A. Owner shall make payments to Contractor when they are due as provided in the Agreement.

9.05 *Lands and Easements; Reports, Tests, and Drawings*

A. Owner's duties with respect to providing lands and easements are set forth in Paragraph 5.01.

B. Owner's duties with respect to providing engineering surveys to establish reference points are set forth in Paragraph 4.03.

C. Article 5 refers to Owner's identifying and making available to Contractor copies of reports of explorations and tests of conditions at the Site, and drawings of physical conditions relating to existing surface or subsurface structures at the Site.

9.06 *Insurance*

A. Owner's responsibilities, if any, with respect to purchasing and maintaining liability and property insurance are set forth in Article 6.

9.07 *Change Orders*

A. Owner's responsibilities with respect to Change Orders are set forth in Article 11.

9.08 *Inspections, Tests, and Approvals*

A. Owner's responsibility with respect to certain inspections, tests, and approvals is set forth in Paragraph 14.02.B.

9.09 *Limitations on Owner's Responsibilities*

A. The Owner shall not supervise, direct, or have control or authority over, nor be responsible for, Contractor's means, methods, techniques, sequences, or procedures of construction, or the safety precautions and programs incident thereto, or for any failure of Contractor to comply with Laws and Regulations applicable to the performance of the Work. Owner will not

Copyright© 2018 National Society of Professional Engineers, American Council of Engineering Companies, and American Society of Civil Engineers. All rights reserved.

be responsible for Contractor's failure to perform the Work in accordance with the Contract Documents.

9.10 *Undisclosed Hazardous Environmental Condition*

A. Owner's responsibility in respect to an undisclosed Hazardous Environmental Condition is set forth in Paragraph 5.06.

9.11 *Deleted in its entirety.*

A. Deleted in its entirety. N/A

9.12 *Safety Programs*

A. While at the Site, Owner's employees and representatives shall comply with the specific applicable requirements of Contractor's safety programs of which Owner has been informed.

B. Owner shall furnish copies of any applicable Owner safety programs to Contractor.

ARTICLE 10—ENGINEER'S STATUS DURING CONSTRUCTION

10.01 *Owner's Representative*

A. Engineer will be Owner's representative during the construction period. The duties and responsibilities and the limitations of authority of Engineer as Owner's representative during construction are set forth in the Contract.

10.02 *Visits to Site*

A. Engineer will make visits to the Site at intervals appropriate to the various stages of construction as Engineer deems necessary in order to observe, as an experienced and qualified design professional, the progress that has been made and the quality of the various aspects of Contractor's executed Work. Based on information obtained during such visits and observations, Engineer, for the benefit of Owner, will determine, in general, if the Work is proceeding in accordance with the Contract Documents. Engineer will not be required to make exhaustive or continuous inspections on the Site to check the quality or quantity of the Work. Engineer's efforts will be directed toward providing for Owner a greater degree of confidence that the completed Work will conform generally to the Contract Documents. On the basis of such visits and observations, Engineer will keep Owner informed of the progress of the Work and will endeavor to guard Owner against defective Work.

B. Engineer's visits and observations are subject to all the limitations on Engineer's authority and responsibility set forth in Paragraph 10.07. Particularly, but without limitation, during or as a result of Engineer's visits or observations of Contractor's Work, Engineer will not supervise, direct, control, or have authority over or be responsible for Contractor's means, methods, techniques, sequences, or procedures of construction, or the safety precautions and programs incident thereto, or for any failure of Contractor to comply with Laws and Regulations applicable to the performance of the Work.

10.03 *Resident Project Representative*

A. If Owner and Engineer have agreed that Engineer will furnish a Resident Project Representative to represent Engineer at the Site and assist Engineer in observing the progress

Copyright© 2018 National Society of Professional Engineers, American Council of Engineering Companies, and American Society of Civil Engineers. All rights reserved.

and quality of the Work, then the authority and responsibilities of any such Resident Project Representative will be as provided in the Supplementary Conditions, and limitations on the responsibilities thereof will be as provided in the Supplementary Conditions and in Paragraph 10.07.

B. If Owner designates an individual or entity who is not Engineer's consultant, agent, or employee to represent Owner at the Site, then the responsibilities and authority of such individual or entity will be as provided in the Supplementary Conditions.

10.04 *Engineer's Authority*

A. Engineer has the authority to reject Work in accordance with Article 14.

B. Engineer's authority as to Submittals is set forth in Paragraph 7.16.

C. Engineer's authority as to design drawings, calculations, specifications, certifications and other Submittals from Contractor in response to Owner's delegation (if any) to Contractor of professional design services, is set forth in Paragraph 7.19.

D. Engineer's authority as to changes in the Work is set forth in Article 11.

E. Engineer's authority as to Applications for Payment is set forth in Article 15.

10.05 *Determinations for Unit Price Work*

A. Engineer will determine the actual quantities and classifications of Unit Price Work performed by Contractor as set forth in Paragraph 13.03.

10.06 *Decisions on Requirements of Contract Documents and Acceptability of Work*

A. Engineer will render decisions regarding the requirements of the Contract Documents, and judge the acceptability of the Work, pursuant to the specific procedures set forth herein for initial interpretations, Change Proposals, and acceptance of the Work. In rendering such decisions and judgments, Engineer will not show partiality to Owner or Contractor, and will not be liable to Owner, Contractor, or others in connection with any proceedings, interpretations, decisions, or judgments conducted or rendered in good faith.

10.07 *Limitations on Engineer's Authority and Responsibilities*

A. Neither Engineer's authority or responsibility under this Article 10 or under any other provision of the Contract, nor any decision made by Engineer in good faith either to exercise or not exercise such authority or responsibility or the undertaking, exercise, or performance of any authority or responsibility by Engineer, will create, impose, or give rise to any duty in contract, tort, or otherwise owed by Engineer to Contractor, any Subcontractor, any Supplier, any other individual or entity, or to any surety for or employee or agent of any of them.

B. Engineer will not supervise, direct, control, or have authority over or be responsible for Contractor's means, methods, techniques, sequences, or procedures of construction, or the safety precautions and programs incident thereto, or for any failure of Contractor to comply with Laws and Regulations applicable to the performance of the Work. Engineer will not be responsible for Contractor's failure to perform the Work in accordance with the Contract Documents.

Copyright© 2018 National Society of Professional Engineers, American Council of Engineering Companies, and American Society of Civil Engineers. All rights reserved.

C. Engineer will not be responsible for the acts or omissions of Contractor or of any Subcontractor, any Supplier, or of any other individual or entity performing any of the Work.

D. Engineer's review of the final Application for Payment and accompanying documentation, and all maintenance and operating instructions, schedules, guarantees, bonds, certificates of inspection, tests and approvals, and other documentation required to be delivered by Contractor under Paragraph 15.06.A, will only be to determine generally that their content complies with the requirements of, and in the case of certificates of inspections, tests, and approvals, that the results certified indicate compliance with the Contract Documents.

E. The limitations upon authority and responsibility set forth in this Paragraph 10.07 also apply to the Resident Project Representative, if any.

10.08 *Compliance with Safety Program*

A. While at the Site, Engineer's employees and representatives will comply with the specific applicable requirements of Owner's and Contractor's safety programs of which Engineer has been informed.

ARTICLE 11—CHANGES TO THE CONTRACT

11.01 *Amending and Supplementing the Contract*

A. The Contract may be amended or supplemented by a Change Order, an Emergency Work Change Directive, or a Field Order.

B. If an amendment or supplement to the Contract includes a change in the Contract Price or the Contract Times, such amendment or supplement must be set forth in a Change Order.

C. All changes to the Contract that involve (1) the performance or acceptability of the Work, (2) the design (as set forth in the Drawings, Specifications, or otherwise), or (3) other engineering or technical matters, must be supported by Engineer's recommendation. Owner and Contractor may amend other terms and conditions of the Contract without the recommendation of the Engineer.

11.02 *Change Orders*

A. Owner and Contractor shall execute appropriate Change Orders covering:

1. Changes in Contract Price or Contract Times which are agreed to by the parties, including any undisputed sum or amount of time for Work actually performed in accordance with an Emergency Work Change Directive;

2. Changes in Contract Price resulting from an Owner set-off, unless Contractor has duly contested such set-off;

3. Changes in the Work which are: (a) ordered by Owner pursuant to Paragraph 11.05, (b) required because of Owner's acceptance of defective Work under Paragraph 14.04 or Owner's correction of defective Work under Paragraph 14.07, or (c) agreed to by the parties, subject to the need for Engineer's recommendation if the change in the Work involves the design (as set forth in the Drawings, Specifications, or otherwise) or other engineering or technical matters; and

Copyright© 2018 National Society of Professional Engineers, American Council of Engineering Companies, and American Society of Civil Engineers. All rights reserved.

4. Changes that embody the substance of any final and binding results under: Paragraph 11.03.B, resolving the impact of an Emergency Work Change Directive; Paragraph 11.09, concerning Change Proposals; Article 12, Claims; Paragraph 13.02.D, final adjustments resulting from allowances; Paragraph 13.03.D, final adjustments relating to determination of quantities for Unit Price Work; and similar provisions.

B. If Owner or Contractor refuses to execute a Change Order that is required to be executed under the terms of Paragraph 11.02.A, it will be deemed to be of full force and effect, as if fully executed.

11.03 Emergency *Work Change Directives*

A. An Emergency Work Change Directive may only be used in emergency situations and will not change the Contract Price or the Contract Times but is evidence that the parties expect that the modification documented by an Emergency Work Change Directive will be incorporated in a subsequently issued Change Order, following negotiations by the parties as to the Emergency Work Change Directive's effect, if any, on the Contract Price and Contract Times; or, if negotiations are unsuccessful, by a determination under the terms of the Contract Documents governing adjustments, expressly including Paragraph 11.07 regarding change of Contract Price.

B. If Owner has issued a written Emergency Work Change Directive and:

1. Contractor believes that an adjustment in Contract Times or Contract Price is necessary, then Contractor shall submit any Change Proposal seeking such an adjustment no later than 30 days after the completion of the Work set out in the Work Change Directive.

2. Owner believes that an adjustment in Contract Times or Contract Price is necessary, then Owner shall submit a Change Order including an adjustment no later than 60 days after issuance of the Work Change Directive.

11.04 *Field Orders*

A. Engineer may authorize minor changes in the Work if the changes do not involve an adjustment in the Contract Price or the Contract Times and are compatible with the design concept of the completed Project as a functioning whole as indicated by the Contract Documents. Such changes will be accomplished by a Field Order and will be binding on Owner and also on Contractor, which shall perform the Work involved promptly.

B. If Contractor believes that a Field Order justifies an adjustment in the Contract Price or Contract Times, then before proceeding with the Work at issue, Contractor shall submit a Change Proposal as provided herein.

11.05 *Owner-Authorized Changes in the Work*

A. Without invalidating the Contract and without notice to any surety, Owner may, at any time or from time to time, order additions, deletions, or revisions in the Work. Changes involving the design (as set forth in the Drawings, Specifications, or otherwise) or other engineering or technical matters will be supported by Engineer's recommendation.

B. Such changes in the Work may be accomplished by a Change Order, if Owner and Contractor have agreed as to the effect, if any, of the changes on Contract Times or Contract Price; or by

Copyright© 2018 National Society of Professional Engineers, American Council of Engineering Companies, and American Society of Civil Engineers. All rights reserved.

a Work Change Directive. Upon receipt of any such document, Contractor shall promptly proceed with the Work involved; or, in the case of a deletion in the Work, promptly cease construction activities with respect to such deleted Work. Added or revised Work must be performed under the applicable conditions of the Contract Documents.

C. Nothing in this Paragraph 11.05 obligates Contractor to undertake work that Contractor reasonably concludes cannot be performed in a manner consistent with Contractor's safety obligations under the Contract Documents or Laws and Regulations.

11.06 *Unauthorized Changes in the Work*

A. Contractor shall not be entitled to an increase in the Contract Price or an extension of the Contract Times with respect to any work performed that is not required by the Contract Documents, as amended, modified, or supplemented, except in the case of an emergency as provided in Paragraph 7.15 or in the case of uncovering Work as provided in Paragraph 14.05.C.2.

11.07 *Change of Contract Price*

A. The Contract Price may only be changed by a Change Order. Any Change Proposal for an adjustment in the Contract Price must comply with the provisions of Paragraph 11.09. Any Claim for an adjustment of Contract Price must comply with the provisions of Article 12.

B. An adjustment in the Contract Price will be determined as follows:

1. Where the Work involved is covered by unit prices contained in the Contract Documents, then by application of such unit prices to the quantities of the items involved (subject to the provisions of Paragraph 13.03);

2. Where the Work involved is not covered by unit prices contained in the Contract Documents, then by a mutually agreed lump sum (which may include an allowance for overhead and profit not necessarily in accordance with Paragraph 11.07.C.2); or

3. Where the Work involved is not covered by unit prices contained in the Contract Documents and the parties do not reach mutual agreement to a lump sum, then on the basis of the Cost of the Work (determined as provided in Paragraph 13.01) plus a Contractor's fee for overhead and profit (determined as provided in Paragraph 11.07.C).

C. *Contractor's Fee*: When applicable, the Contractor's fee for overhead and profit will be determined as follows:

1. A mutually acceptable fixed fee; or

2. If a fixed fee is not agreed upon, then a fee based on the following percentages of the various portions of the Cost of the Work:

a. For costs incurred under Paragraphs 13.01.B.1 and 13.01.B.2, the Contractor's fee will be 15 percent;

b. For costs incurred under Paragraph 13.01.B.3, the Contractor's fee will be 5 percent;

c. Where one or more tiers of subcontracts are on the basis of Cost of the Work plus a fee and no fixed fee is agreed upon, the intent of Paragraphs 11.07.C.2.a and 11.07.C.2.b is that the Contractor's fee will be based on: (1) a fee of 15 percent of the

Copyright© 2018 National Society of Professional Engineers, American Council of Engineering Companies, and American Society of Civil Engineers. All rights reserved.

costs incurred under Paragraphs 13.01.B.1 and 13.01.B.2 by the Subcontractor that actually performs the Work, at whatever tier, and (2) with respect to Contractor itself and to any Subcontractors of a tier higher than that of the Subcontractor that actually performs the Work, a fee of 5 percent of the amount (fee plus underlying costs incurred) attributable to the next lower tier Subcontractor; provided, however, that for any such subcontracted Work the maximum total fee to be paid by Owner will be no greater than 27 percent of the costs incurred by the Subcontractor that actually performs the Work;

d. No fee will be payable on the basis of costs itemized under Paragraphs 13.01.B.4, 13.01.B.5, and 13.01.C;

e. The amount of credit to be allowed by Contractor to Owner for any change which results in a net decrease in Cost of the Work will be the amount of the actual net decrease in Cost of the Work and a deduction of an additional amount equal to 5 percent of such actual net decrease in Cost of the Work; and

f. When both additions and credits are involved in any one change or Change Proposal, the adjustment in Contractor's fee will be computed by determining the sum of the costs in each of the cost categories in Paragraph 13.01.B (specifically, payroll costs, Paragraph 13.01.B.1; incorporated materials and equipment costs, Paragraph 13.01.B.2; Subcontract costs, Paragraph 13.01.B.3; special consultants costs, Paragraph 13.01.B.4; and other costs, Paragraph 13.01.B.5) and applying to each such cost category sum the appropriate fee from Paragraphs 11.07.C.2.a through 11.07.C.2.e, inclusive.

g. This paragraph is supplemented by 23 CFR 635.109, and any conflict herewith, the 23 CFR 635.109 shall prevail.

11.08 *Change of Contract Times*

A. The Contract Times may only be changed by a Change Order. Any Change Proposal for an adjustment in the Contract Times must comply with the provisions of Paragraph 11.09. Any Claim for an adjustment in the Contract Times must comply with the provisions of Article 12.

B. Delay, disruption, and interference in the Work, and any related changes in Contract Times, are addressed in and governed by Paragraph 4.05.

11.09 *Change Proposals*

A. *Purpose and Content*: Contractor shall submit a Change Proposal to Engineer to request an adjustment in the Contract Times or Contract Price; contest an initial decision by Engineer concerning the requirements of the Contract Documents or relating to the acceptability of the Work under the Contract Documents; challenge a set-off against payment due; or seek other relief under the Contract. The Change Proposal will specify any proposed change in Contract Times or Contract Price, or other proposed relief, and explain the reason for the proposed change, with citations to any governing or applicable provisions of the Contract Documents. Each Change Proposal will address only one issue, or a set of closely related issues.

Copyright© 2018 National Society of Professional Engineers, American Council of Engineering Companies, and American Society of Civil Engineers. All rights reserved.

B. *Change Proposal Procedures*

1. *Submittal*: Contractor shall submit each Change Proposal to Engineer within 30 days after the start of the event giving rise thereto, or after such initial decision.

2. *Supporting Data*: The Contractor shall submit supporting data, including the proposed change in Contract Price or Contract Time (if any), to the Engineer and Owner within 15 days after the submittal of the Change Proposal.

    a. Change Proposals based on or related to delay, interruption, or interference must comply with the provisions of Paragraphs 4.05.D and 4.05.E.

    b. Change proposals related to a change of Contract Price must include full and detailed accounts of materials incorporated into the Work and labor and equipment used for the subject Work.

    The supporting data must be accompanied by a written statement that the supporting data are accurate and complete, and that any requested time or price adjustment is the entire adjustment to which Contractor believes it is entitled as a result of said event.

3. *Engineer's Initial Review*: Engineer will advise Owner regarding the Change Proposal, and consider any comments or response from Owner regarding the Change Proposal. If in its discretion Engineer concludes that additional supporting data is needed before conducting a full review and making a recommendation regarding the Change Proposal, then Engineer may request that Contractor submit such additional supporting data by a date specified by Engineer, prior to Engineer beginning its full review of the Change Proposal.

4. *Engineer's Full Review and Recommendation on the Change Proposal*: Upon receipt of Contractor's supporting data (including any additional data requested by Engineer), Engineer will conduct a full review of each Change Proposal and, within 30 days after such receipt of the Contractor's supporting data, either recommend approval of the Change Proposal in whole, deny it in whole, or approve it in part and deny it in part. Such actions must be in writing, with a copy provided to Owner and Contractor. If Engineer does not take action on the Change Proposal within 30 days, then either Owner or Contractor may at any time thereafter submit a letter to the other party indicating that as a result of Engineer's inaction the Change Proposal is deemed denied, thereby commencing the time for appeal of the denial under Article 12.

5. *Binding Decision*: Engineer's recommendation is sent to the Owner who shall render a final decision. The Owner's decision is final and binding upon Contractor, unless Contractor appeals the decision by filing a Claim under Article 12.

C. *Resolution of Certain Change Proposals*: If the Change Proposal does not involve the design (as set forth in the Drawings, Specifications, or otherwise), the acceptability of the Work, or other engineering or technical matters, then Engineer will notify the parties in writing that the Engineer is unable to resolve the Change Proposal. For purposes of further resolution of such a Change Proposal, such notice will be deemed a denial, and Contractor may choose to seek resolution under the terms of Article 12.

Copyright© 2018 National Society of Professional Engineers, American Council of Engineering Companies, and American Society of Civil Engineers. All rights reserved.

D. *Post-Completion*: Contractor shall not submit any Change Proposals after Engineer issues a written recommendation of final payment pursuant to Paragraph 15.06.B.

11.10 *Notification to Surety*

A. If the provisions of any bond require notice to be given to a surety of any change affecting the general scope of the Work or the provisions of the Contract Documents (including, but not limited to, Contract Price or Contract Times), the giving of any such notice will be Contractor's responsibility. The amount of each applicable bond will be adjusted to reflect the effect of any such change.

ARTICLE 12—CLAIMS - DELETED IN ITS ENTIRETY12.01 CLAIMS - DELETED IN ITS ENTIRETY: PLEASE REFER TO LAP DIVISION I SPECIFICATIONS PACKAGE, SECTION(S) 5-12, "CLAIMS BY CONTRACTOR."

A. DELETED IN ITS ENTIRETY.1. DELETED IN ITS ENTIRETY.2. DELETED IN ITS ENTIRETY.3. DELETED IN ITS ENTIRETY.4. DELETED IN ITS ENTIRETY.B. DELETED IN ITS ENTIRETY.C. DELETED IN ITS ENTIRETY.D. DELETED IN ITS ENTIRETY.1. 2. DELETED IN ITS ENTIRETY.3. DELETED IN ITS ENTIRETY.E. DELETED IN ITS ENTIRETY.F. DELETED IN ITS ENTIRETY.G. DELETED IN ITS ENTIRETY.ARTICLE 13—COST OF THE WORK; ALLOWANCES; UNIT PRICE WORK

13.01 *Cost of the Work*

A. *Purposes for Determination of Cost of the Work*: The term Cost of the Work means the sum of all costs necessary for the proper performance of the Work at issue, as further defined below. The provisions of this Paragraph 13.01 are used for two distinct purposes:

1. To determine Cost of the Work when Cost of the Work is a component of the Contract Price, under cost-plus-fee, time-and-materials, or other cost-based terms; or

2. When needed to determine the value of a Change Order, Change Proposal, Claim, set-off, or other adjustment in Contract Price. When the value of any such adjustment is determined on the basis of Cost of the Work, Contractor is entitled only to those additional or incremental costs required because of the change in the Work or because of the event giving rise to the adjustment.

B. *Allowable Costs for Extra Work:* Refer to Specifications 4-3.2.1 and 4-3.2.2.

13.02 *Allowances*

A. It is understood that Contractor has included in the Contract Price all allowances so named in the Contract Documents and shall cause the Work so covered to be performed for such sums and by such persons or entities as may be acceptable to Owner and Engineer.

B. *Cash Allowances*: Contractor agrees that:

1. the cash allowances include the cost to Contractor (less any applicable trade discounts) of materials and equipment required by the allowances to be delivered at the Site, and all applicable taxes; and

2. Contractor's costs for unloading and handling on the Site, labor, installation, overhead, profit, and other expenses contemplated for the cash allowances have been included in

Copyright© 2018 National Society of Professional Engineers, American Council of Engineering Companies, and American Society of Civil Engineers. All rights reserved.

the Contract Price and not in the allowances, and no demand for additional payment for any of the foregoing will be valid.

C. *Owner's Contingency Allowance*: Contractor agrees that an Owner's contingency allowance, if any, is for the sole use of Owner to cover unanticipated costs.

D. Prior to final payment, an appropriate Change Order will be issued as recommended by Engineer to reflect actual amounts due Contractor for Work covered by allowances, and the Contract Price will be correspondingly adjusted.

13.03 *Unit Price Work*

A. Where the Contract Documents provide that all or part of the Work is to be Unit Price Work, initially the Contract Price will be deemed to include for all Unit Price Work an amount equal to the sum of the unit price for each separately identified item of Unit Price Work times the estimated quantity of each item as indicated in the Agreement.

B. The estimated quantities of items of Unit Price Work are estimates and are solely for the purpose of comparison of Bids and determining an initial Contract Price. Payments to Contractor for Unit Price Work will be based on actual quantities.

C. Each unit price shall be guaranteed and will be deemed to include an amount considered by Contractor to be adequate to cover Contractor's overhead and profit for each separately identified item.

D. Engineer will determine the actual quantities and classifications of Unit Price Work performed by Contractor. Engineer will review with Contractor the Engineer's preliminary determinations on such matters before rendering a written decision thereon (by recommendation of an Application for Payment or otherwise). Engineer's written decision thereon will be final and binding (except as modified by Engineer to reflect changed factual conditions or more accurate data) upon Owner and Contractor, and the final adjustment of Contract Price will be set forth in a Change Order, subject to the provisions of the following paragraph.

E. *Adjustments in Unit Price*

1. Contractor or Owner shall be entitled to an adjustment in the unit price with respect to an item of Unit Price Work based on Specification 4-3.

ARTICLE 14—TESTS AND INSPECTIONS; CORRECTION, REMOVAL, OR ACCEPTANCE OF DEFECTIVE WORK

14.01 *Access to Work*

A. Owner, Engineer, their consultants and other representatives and personnel of Owner, independent testing laboratories, and authorities having jurisdiction have access to the Site and the Work at reasonable times for their observation, inspection, and testing. Contractor shall provide them proper and safe conditions for such access and advise them of Contractor's safety procedures and programs so that they may comply with such procedures and programs as applicable.

Copyright© 2018 National Society of Professional Engineers, American Council of Engineering Companies, and American Society of Civil Engineers. All rights reserved.

14.02 *Tests, Inspections, and Approvals*

A. Contractor shall give Engineer timely notice of readiness of the Work (or specific parts thereof) for all required inspections and tests, and shall cooperate with inspection and testing personnel to facilitate required inspections and tests.

B. Owner shall retain and pay for the services of an independent inspector, testing laboratory, or other qualified individual or entity to perform all inspections and tests expressly required by the Contract Documents to be furnished and paid for by Owner, except that costs incurred in connection with tests or inspections of covered Work will be governed by the provisions of Paragraph 14.05.

C. If Laws or Regulations of any public body having jurisdiction require any Work (or part thereof) specifically to be inspected, tested, or approved by an employee or other representative of such public body, Contractor shall assume full responsibility for arranging and obtaining such inspections, tests, or approvals, pay all costs in connection therewith, and furnish Engineer the required certificates of inspection or approval.

D. Contractor shall be responsible for arranging, obtaining, and paying for all inspections and tests required:

1. by the Contract Documents, unless the Contract Documents expressly allocate responsibility for a specific inspection or test to Owner;

2. to attain Owner's and Engineer's acceptance of materials or equipment to be incorporated in the Work;

3. by manufacturers of equipment furnished under the Contract Documents;

4. for testing, adjusting, and balancing of mechanical, electrical, and other equipment to be incorporated into the Work; and

5. for acceptance of materials, mix designs, or equipment submitted for approval prior to Contractor's purchase thereof for incorporation in the Work.

Such inspections and tests will be performed by independent inspectors, testing laboratories, or other qualified individuals or entities acceptable to Owner and Engineer.

E. If the Contract Documents require the Work (or part thereof) to be approved by Owner, Engineer, or another designated individual or entity, then Contractor shall assume full responsibility for arranging and obtaining such approvals.

F. If any Work (or the work of others) that is to be inspected, tested, or approved is covered by Contractor without written concurrence of Engineer, Contractor shall, if requested by Engineer, uncover such Work for observation. Such uncovering will be at Contractor's expense unless Contractor had given Engineer timely notice of Contractor's intention to cover the same and Engineer had not acted with reasonable promptness in response to such notice.

14.03 *Defective Work*

A. *Contractor's Obligation*: It is Contractor's obligation to assure that the Work is not defective.

B. *Engineer's Authority*: Engineer has the authority to determine whether Work is defective, and to reject defective Work.

Copyright© 2018 National Society of Professional Engineers, American Council of Engineering Companies, and American Society of Civil Engineers. All rights reserved.

C. *Notice of Defects*: Prompt written notice of all defective Work of which Owner or Engineer has actual knowledge will be given to Contractor.

D. *Correction, or Removal and Replacement*: Promptly after receipt of written notice of defective Work, Contractor shall correct all such defective Work, whether or not fabricated, installed, or completed, or, if Engineer has rejected the defective Work, remove it from the Project and replace it with Work that is not defective.

E. *Preservation of Warranties*: When correcting defective Work, Contractor shall take no action that would void or otherwise impair Owner's special warranty and guarantee, if any, on said Work.

F. *Costs and Damages*: In addition to its correction, removal, and replacement obligations with respect to defective Work, Contractor shall pay all claims, costs, losses, and damages arising out of or relating to defective Work, including but not limited to the cost of the inspection, testing, correction, removal, replacement, or reconstruction of such defective Work, fines levied against Owner by governmental authorities because the Work is defective, and the costs of repair or replacement of work of others resulting from defective Work. Prior to final payment, if Owner and Contractor are unable to agree as to the measure of such claims, costs, losses, and damages resulting from defective Work, then Owner may impose a reasonable set-off against payments due under Article 15.

14.04 *Acceptance of Defective Work*

A. If, instead of requiring correction or removal and replacement of defective Work, Owner prefers to accept it, Owner may do so (subject, if such acceptance occurs prior to final payment, to Engineer's confirmation that such acceptance is in general accord with the design intent and applicable engineering principles, and will not endanger public safety). Contractor shall pay all claims, costs, losses, and damages attributable to Owner's evaluation of and determination to accept such defective Work (such costs to be approved by Engineer as to reasonableness), and for the diminished value of the Work to the extent not otherwise paid by Contractor. If any such acceptance occurs prior to final payment, the necessary revisions in the Contract Documents with respect to the Work will be incorporated in a Change Order. If the parties are unable to agree as to the decrease in the Contract Price, reflecting the diminished value of Work so accepted, then Owner may impose a reasonable set-off against payments due under Article 15. If the acceptance of defective Work occurs after final payment, Contractor shall pay an appropriate amount to Owner.

B. Owner shall not be deemed to have accepted any defective work from Contractor that was not discovered by Engineer or Owner unless the defect was specifically detailed to Owner in writing by Contractor notifying Owner of the defective work and Owner notifies Contractor in writing that it will accept defective work (whether as-is, by receiving credit, or receiving other compensation, losses, or damage from Contractor as discussed above in Paragraph 14.04.A.) Contractor recognizes and understands that it shall not be relieved of responsibility or liability with performing defective work even if such defective work previously passed inspection by any inspector, including, without limitation, an inspector with the governing building department or a threshold inspector.

Copyright© 2018 National Society of Professional Engineers, American Council of Engineering Companies, and American Society of Civil Engineers. All rights reserved.

14.05 *Uncovering Work*

A. Engineer has the authority to require additional inspection or testing of the Work, whether or not the Work is fabricated, installed, or completed.

B. If any Work is covered contrary to the written request of Engineer, then Contractor shall, if requested by Engineer, uncover such Work for Engineer's observation, and then replace the covering, all at Contractor's expense.

C. If Engineer considers it necessary or advisable that covered Work be observed by Engineer or inspected or tested by others, then Contractor, at Engineer's request, shall uncover, expose, or otherwise make available for observation, inspection, or testing as Engineer may require, that portion of the Work in question, and provide all necessary labor, material, and equipment.

1. If it is found that the uncovered Work is defective, Contractor shall be responsible for all claims, costs, losses, and damages arising out of or relating to such uncovering, exposure, observation, inspection, and testing, and of satisfactory replacement or reconstruction (including but not limited to all costs of repair or replacement of work of others); and pending Contractor's full discharge of this responsibility the Owner shall be entitled to impose a reasonable set-off against payments due under Article 15.

2. If the uncovered Work is not found to be defective, Contractor shall be allowed an increase in the Contract Price or an extension of the Contract Times, directly attributable to such uncovering, exposure, observation, inspection, testing, replacement, and reconstruction. If the parties are unable to agree as to the amount or extent thereof, then Contractor may submit a Change Proposal within 30 days of the determination that the Work is not defective.

14.06 *Owner May Stop the Work*

A. If the Work is defective, or Contractor fails to supply sufficient skilled workers or suitable materials or equipment, or fails to perform the Work in such a way that the completed Work will conform to the Contract Documents, then Owner may order Contractor to stop the Work, or any portion thereof, until the cause for such order has been eliminated; however, this right of Owner to stop the Work will not give rise to any duty on the part of Owner to exercise this right for the benefit of Contractor, any Subcontractor, any Supplier, any other individual or entity, or any surety for, or employee or agent of any of them. The Owner shall incur no liability for delays occasioned by any stop-work order issued in accordance with this paragraph.

14.07 *Owner May Correct Defective Work*

A. If Contractor fails within a reasonable time after written notice from Engineer to correct defective Work, or to remove and replace defective Work as required by Engineer, then Owner may, after 7 days' written notice to Contractor, correct or remedy any such deficiency.

B. In exercising the rights and remedies under this Paragraph 14.07, Owner shall proceed expeditiously. In connection with such corrective or remedial action, Owner may exclude Contractor from all or part of the Site, take possession of all or part of the Work and suspend Contractor's services related thereto, and incorporate in the Work all materials and

Copyright© 2018 National Society of Professional Engineers, American Council of Engineering Companies, and American Society of Civil Engineers. All rights reserved.

equipment stored at the Site or for which Owner has paid Contractor but which are stored elsewhere. Contractor shall allow Owner, Owner's representatives, agents and employees, Owner's other contractors, and Engineer and Engineer's consultants access to the Site to enable Owner to exercise the rights and remedies under this paragraph.

C. All claims, costs, losses, and damages incurred or sustained by Owner in exercising the rights and remedies under this Paragraph 14.07 will be charged against Contractor as set-offs against payments due under Article 15. Such claims, costs, losses and damages will include but not be limited to all costs of repair, or replacement of work of others destroyed or damaged by correction, removal, or replacement of Contractor's defective Work.

D. Contractor shall not be allowed an extension of the Contract Times because of any delay in the performance of the Work attributable to the exercise by Owner of Owner's rights and remedies under this Paragraph 14.07.

ARTICLE 15—PAYMENTS TO CONTRACTOR; SET-OFFS; COMPLETION; CORRECTION PERIOD

15.01 *Progress Payments*

A. *Basis for Progress Payments*: The Schedule of Values established as provided in Article 2 will serve as the basis for progress payments and will be incorporated into a form of Application for Payment acceptable to Engineer and Owner. Progress payments for Unit Price Work will be based on the number of units completed during the pay period, as determined under the provisions of Paragraph 13.03. Progress payments for cost-based Work will be based on Cost of the Work completed by Contractor during the pay period.

B. *Applications for Payments*

1. Contractor, on the 25th of each month, shall submit to Engineer for review an Application for Payment (in a form approved by Owner) filled out and signed by Contractor covering the Work completed as of the date of the Application and accompanied by such supporting documentation as is required by the Contract Documents.

2. If payment is requested on the basis of materials and equipment not incorporated in the Work but delivered and suitably stored at the Site or at another location agreed to in writing, the Application for Payment must also be accompanied by: (a) a bill of sale, invoice, copies of subcontract or purchase order payments, or other documentation establishing full payment by Contractor for the materials and equipment; (b) at Owner's request, documentation warranting that Owner has received the materials and equipment free and clear of all Liens; and (c) evidence that the materials and equipment are covered by appropriate property insurance, a warehouse bond, or other arrangements to protect Owner's interest therein, all of which must be satisfactory to Owner.

3. Beginning with the second Application for Payment, each Application must include an affidavit of Contractor stating that all previous progress payments received by Contractor have been applied to discharge Contractor's legitimate obligations associated with prior Applications for Payment.

Copyright© 2018 National Society of Professional Engineers, American Council of Engineering Companies, and American Society of Civil Engineers. All rights reserved.

4. The amount of retainage with respect to progress payments will be as stipulated in the Agreement.

C. *Review of Applications*

1. Engineer will, within 10 days after each Application for Payment is stamped as received by Engineer, including each resubmittal, either indicate in writing a recommendation of payment and present the Application to Owner, or return the Application to Contractor indicating in writing Engineer's reasons for refusing to recommend payment and the action necessary to make payment application proper. In the latter case, Contractor shall make the necessary corrections and resubmit the Application.

2. Engineer's recommendation of any payment requested in an Application for Payment will constitute a representation by Engineer to Owner, based on Engineer's observations of the executed Work as an experienced and qualified design professional, and on Engineer's review of the Application for Payment and the accompanying data and schedules, that to the best of Engineer's knowledge, information and belief:

   a. the Work has progressed to the point indicated;

   b. the quality of the Work is generally in accordance with the Contract Documents (subject to an evaluation of the Work as a functioning whole prior to or upon Substantial Completion, the results of any subsequent tests called for in the Contract Documents, a final determination of quantities and classifications for Unit Price Work under Paragraph 13.03, and any other qualifications stated in the recommendation); and

   c. the conditions precedent to Contractor's being entitled to such payment appear to have been fulfilled in so far as it is Engineer's responsibility to observe the Work.

3. By recommending any such payment Engineer will not thereby be deemed to have represented that:

   a. inspections made to check the quality or the quantity of the Work as it has been performed have been exhaustive, extended to every aspect of the Work in progress, or involved detailed inspections of the Work beyond the responsibilities specifically assigned to Engineer in the Contract; or

   b. there may not be other matters or issues between the parties that might entitle Contractor to be paid additionally by Owner or entitle Owner to withhold payment to Contractor.

4. Neither Engineer's review of Contractor's Work for the purposes of recommending payments nor Engineer's recommendation of any payment, including final payment, will impose responsibility on Engineer:

   a. to supervise, direct, or control the Work;

   b. for the means, methods, techniques, sequences, or procedures of construction, or the safety precautions and programs incident thereto;

   c. for Contractor's failure to comply with Laws and Regulations applicable to Contractor's performance of the Work;

Copyright© 2018 National Society of Professional Engineers, American Council of Engineering Companies, and American Society of Civil Engineers. All rights reserved.

d. to make any examination to ascertain how or for what purposes Contractor has used the money paid by Owner; or

e. to determine that title to any of the Work, materials, or equipment has passed to Owner free and clear of any Liens.

5. Neither Engineer's review of Contractor's Work for purposes of recommending payments nor Engineer's recommendation of any payment shall relieve Contractor of responsibility or liability for defects in the Work.

6. Engineer may refuse to recommend the whole or any part of any payment if, in Engineer's opinion, it would be incorrect to make the representations to Owner stated in Paragraph 15.01.C.2.

6. Engineer will recommend reductions in payment (set-offs) necessary in Engineer's opinion to protect Owner from loss because:

a. the Work is defective, requiring correction or replacement;

b. the Contract Price has been reduced by Change Orders;

c. Owner has been required to correct defective Work in accordance with Paragraph 14.07, or has accepted defective Work pursuant to Paragraph 14.04;

d. Owner has been required to remove or remediate a Hazardous Environmental Condition for which Contractor is responsible; or

e. Engineer has actual knowledge of the occurrence of any of the events that would constitute a default by Contractor and therefore justify termination for cause under the Contract Documents.

D. *Payment Becomes Due*

1. Subject to the provisions of Paragraph 15.01.E. and Section 218. 735, Florida Statutes, after presentation of the Application for Payment to Owner with Engineer's recommendation, the amount recommended (subject to any Owner set-offs) shall be paid by Owner in accordance with Section 218.735, Florida Statutes, within 25 business days after the date on which the payment application is stamped as received by Engineer.

E. *Reductions in Payment by Owner*

1. In addition to any reductions in payment (set-offs) recommended by Engineer, Owner is entitled to impose a set-off against payment based on any of the following:

a. Claims have been made against Owner based on Contractor's conduct in the performance or furnishing of the Work, or Owner has incurred costs, losses, or damages resulting from Contractor's conduct in the performance or furnishing of the Work, including but not limited to claims, costs, losses, or damages from workplace injuries, adjacent property damage, non-compliance with Laws and Regulations, and patent infringement;

b. Contractor has failed to take reasonable and customary measures to avoid damage, delay, disruption, and interference with other work at or adjacent to the Site;

c. Contractor has failed to provide and maintain required bonds or insurance;

Copyright© 2018 National Society of Professional Engineers, American Council of Engineering Companies, and American Society of Civil Engineers. All rights reserved.

d. Owner has been required to remove or remediate a Hazardous Environmental Condition for which Contractor is responsible;

e. Owner has incurred extra charges or engineering costs related to submittal reviews, evaluations of proposed substitutes, tests and inspections, or return visits to manufacturing or assembly facilities;

f. The Work is defective, requiring correction or replacement;

g. Owner has been required to correct defective Work in accordance with Paragraph 14.07, or has accepted defective Work pursuant to Paragraph 14.04;

h. The Contract Price has been reduced by Change Orders;

i. An event has occurred that would constitute a default by Contractor and therefore justify a termination for cause;

j. Liquidated or other damages have accrued as a result of Contractor's failure to achieve Milestones, Substantial Completion, or final completion of the Work;

k. Liens have been filed in connection with the Work, except where Contractor has delivered a specific bond satisfactory to Owner to secure the satisfaction and discharge of such Liens; or

l. Other items entitle Owner to a set-off against the amount recommended.

2. If Owner imposes any set-off against payment, whether based on its own knowledge or on the written recommendations of Engineer, Owner will give Contractor immediate written notice (with a copy to Engineer) stating the reasons for such action and the specific amount of the reduction, and promptly pay Contractor any amount remaining after deduction of the amount so withheld. Owner shall promptly pay Contractor the amount so withheld, or any adjustment thereto agreed to by Owner and Contractor, if Contractor remedies the reasons for such action. The reduction imposed will be binding on Contractor unless it duly submits a Change Proposal contesting the reduction.

3. Upon a subsequent determination that Owner's refusal of payment was not justified, the amount wrongfully withheld will be treated as an amount due as determined by Paragraph 15.01.D.1 and subject to interest as provided in the Agreement.

15.02 *Contractor's Warranty of Title*

A. Contractor warrants and guarantees that title to all Work, materials, and equipment furnished under the Contract will pass to Owner free and clear of (1) all Liens and other title defects, and (2) all patent, licensing, copyright, or royalty obligations, no later than 7 days after the time of payment by Owner.

15.03 *Substantial Completion*

A. When Contractor considers the entire Work ready for its intended use Contractor shall notify Owner and Engineer in writing that the entire Work is substantially complete and request that Engineer issue a certificate of Substantial Completion. Contractor shall at the same time submit to Owner and Engineer an initial draft of Punch List items to be completed or corrected

Copyright© 2018 National Society of Professional Engineers, American Council of Engineering Companies, and American Society of Civil Engineers. All rights reserved.

before final payment. Substantial Completion cannot occur before the Owner is able to begin to utilize the entire Work for the purposes for which it was intended.

B. Promptly after Contractor's notification, Owner, Contractor, and Engineer shall make an inspection of the Work to determine the status of completion. If Engineer does not consider the Work substantially complete, Engineer will notify Contractor in writing giving the reasons therefor.

C. If Engineer considers the Work substantially complete, Engineer will deliver to Owner a preliminary certificate of Substantial Completion which will fix the date of Substantial Completion. Engineer shall attach to the certificate a Punch List of items to be completed or corrected before final payment Owner shall have 7 days after receipt of the preliminary certificate during which to make written objection to Engineer as to any provisions of the certificate or attached Punch List. If, after considering the objections to the provisions of the preliminary certificate, Engineer concludes that the Work is not substantially complete, Engineer will, within 14 days after submission of the preliminary certificate to Owner, notify Contractor in writing that the Work is not substantially complete, stating the reasons therefor. If Owner does not object to the provisions of the certificate, or if despite consideration of Owner's objections Engineer concludes that the Work is substantially complete, then Engineer will, within said 14 days, execute and deliver to Owner and Contractor a final certificate of Substantial Completion (with a revised Punch List of items to be completed or corrected) reflecting such changes from the preliminary certificate as Engineer believes justified after consideration of any objections from Owner.

D. At the time of receipt of the preliminary certificate of Substantial Completion, Owner and Contractor will confer regarding Owner's use or occupancy of the Work following Substantial Completion, review the builder's risk insurance policy with respect to the end of the builder's risk coverage, and confirm the transition to coverage of the Work under a permanent property insurance policy held by Owner. Unless Owner and Contractor agree otherwise in writing, Owner shall bear responsibility for security, operation, protection of the Work, property insurance, maintenance, heat, and utilities upon Owner's use or occupancy of the Work.

E. After Substantial Completion the Contractor shall promptly begin work on the Punch List of items to be completed or corrected prior to final payment. In appropriate cases Contractor may submit monthly Applications for Payment for completed Punch List items, following the progress payment procedures set forth above.

F. Owner shall have the right to exclude Contractor from the Site after the date of Substantial Completion subject to allowing Contractor reasonable access to remove its property and complete or correct items on the Punch List.

15.04 *Partial Use or Occupancy*

A. Prior to Substantial Completion of all the Work, Owner may use or occupy any substantially completed part of the Work which has specifically been identified in the Contract Documents, or which Owner, Engineer, and Contractor agree constitutes a separately functioning and usable part of the Work that can be used by Owner for its intended purpose without

Copyright© 2018 National Society of Professional Engineers, American Council of Engineering Companies, and American Society of Civil Engineers. All rights reserved.

significant interference with Contractor's performance of the remainder of the Work, subject to the following conditions:

1. At any time, Owner may request in writing that Contractor permit Owner to use or occupy any such part of the Work that Owner believes to be substantially complete. If and when Contractor agrees that such part of the Work is substantially complete, Contractor, Owner, and Engineer will follow the procedures of Paragraph 15.03.A through 15.03.E for that part of the Work.

2. At any time, Contractor may notify Owner and Engineer in writing that Contractor considers any such part of the Work substantially complete and request Engineer to issue a certificate of Substantial Completion for that part of the Work.

3. Within a reasonable time after either such request, Owner, Contractor, and Engineer shall make an inspection of that part of the Work to determine its status of completion. If Engineer does not consider that part of the Work to be substantially complete, Engineer will notify Owner and Contractor in writing giving the reasons therefor. If Engineer considers that part of the Work to be substantially complete, the provisions of Paragraph 15.03 will apply with respect to certification of Substantial Completion of that part of the Work and the division of responsibility in respect thereof and access thereto.

4. No use or occupancy or separate operation of part of the Work may occur prior to compliance with the requirements of Paragraph 6.04 regarding builder's risk or other property insurance.

15.05 *Final Inspection – Punch List*

A. Upon written notice from Contractor that the entire Work or an agreed portion thereof is complete, Engineer will promptly make a final inspection with Owner and Contractor and will notify Contractor in writing of all particulars in which this inspection reveals that the Work, or agreed portion thereof, is incomplete or defective. Contractor shall immediately take such measures as are necessary to complete such Work or remedy such deficiencies.

15.06 *Final Payment*

A. *Application for Payment*

1. After Contractor has, in the opinion of Engineer, satisfactorily completed all corrections identified during the final inspection and has delivered, in accordance with the Contract Documents, all maintenance and operating instructions, schedules, guarantees, bonds, certificates or other evidence of insurance, certificates of inspection, annotated record documents (as provided in Paragraph 7.12), and other documents, Contractor may make application for final payment.

2. The final Application for Payment must be accompanied (except as previously delivered) by:

a. all documentation called for in the Contract Documents, including but not limited to, the evidence that Contractor maintains completed operations coverage for its required commercial general liability (CGL) insurance;

Copyright© 2018 National Society of Professional Engineers, American Council of Engineering Companies, and American Society of Civil Engineers. All rights reserved.

b. consent of the surety, if any, to final payment;

c. satisfactory evidence that all title issues have been resolved such that title to all Work, materials, and equipment has passed to Owner free and clear of any Liens or other title defects, or will so pass upon final payment.

d. a list of all duly pending Change Proposals and Claims; and

e. complete and legally effective final releases or waivers (satisfactory to Owner) of all Lien rights and Liens filed in connection with the Work.

3. In lieu of the final releases or waivers of Liens specified in Paragraph 15.06.A.2 and as approved by Owner, Contractor may furnish receipts or releases in full and an affidavit of Contractor whereby Contractor swears that: (a) all payrolls, services, material, and equipment bills and other indebtedness connected with the Work for which Owner has paid Contractor through the date of Contractor's final Application for Payment have been paid by Contractor; and (b) all payrolls, material and equipment bills, and other indebtedness connected with the Work for which Owner will pay Contractor in the final Application for Payment will represent Contractor's receipt of all payments for the Work except for the specifically enumerated Claims (and Claims not specifically enumerated are deemed released and waived) and that Contractor will promptly pay its Subcontractors and Suppliers upon its receipt of the final payment. If any Subcontractor or Supplier fails to furnish such a release or receipt in full, Contractor may furnish a bond or other collateral satisfactory to Owner to indemnify Owner against any Lien, or Owner at its option may issue joint checks payable to Contractor and specified Subcontractors and Suppliers.

4. The documents and materials that Contractor is required to submit to accompany its Final Application for Payment (as set forth in this Paragraph 15.06) are conditions precedent to issuance of final payment.

B. *Engineer's Review of Final Application and Recommendation of Payment*: If, on the basis of Engineer's observation of the Work during construction and final inspection, and Engineer's review of the final Application for Payment and accompanying documentation as required by the Contract Documents, Engineer is satisfied that the Work has been completed and Contractor's other obligations under the Contract have been fulfilled, Engineer will, within 10 days after receipt of the final Application for Payment, indicate in writing Engineer's recommendation of final payment and present the final Application for Payment to Owner for payment. Such recommendation will account for any set-offs against payment that are necessary in Engineer's opinion to protect Owner from loss for the reasons stated above with respect to progress payments. Otherwise, Engineer will return the Application for Payment to Contractor, indicating in writing the reasons for refusing to recommend final payment, in which case Contractor shall make the necessary corrections and resubmit the Application for Payment.

C. *Notice of Acceptability*: In support of its recommendation of payment of the final Application for Payment, Engineer will also give written notice to Owner and Contractor that the Work is acceptable, subject to stated limitations in the notice and to the provisions of Paragraph 15.07.

Copyright© 2018 National Society of Professional Engineers, American Council of Engineering Companies, and American Society of Civil Engineers. All rights reserved.

D. *Completion of Work*: The Work is complete (subject to surviving obligations) when it is ready for final payment as established by the Engineer's written recommendation of final payment and issuance of notice of the acceptability of the Work.

E. *Final Payment Becomes Due*: Upon receipt from Engineer of the final Application for Payment and accompanying documentation, Owner shall set off against the amount recommended by Engineer for final payment any further sum to which Owner is entitled, including but not limited to set-offs for liquidated damages and set-offs allowed under the provisions of this Contract with respect to progress payments. Owner shall pay the resulting balance due to Contractor within Twenty-five (25) days of the final Application for Payment being stamped as received by Engineer.

15.07 *Waiver of Claims*

A. By making final payment, Owner waives its claim or right to liquidated damages or other damages for late completion by Contractor, except as set forth in an outstanding Claim, appeal under the provisions of Article 17, set-off, or express reservation of rights by Owner. Owner reserves all other claims or rights after final payment.

B. The acceptance of final payment by Contractor will constitute a waiver by Contractor of all claims and rights against Owner other than those pending matters that have been duly submitted as a Claim, or appealed under the provisions of Article 17.

15.08 *Correction Period*

A. If within one year after the date of Substantial Completion (or such longer period of time as may be prescribed by the Supplementary Conditions or the terms of any applicable special guarantee required by the Contract Documents), Owner gives Contractor written notice that any Work has been found to be defective, or that Contractor's repair of any damages to the Site or adjacent areas has been found to be defective, then after receipt of such notice of defect Contractor shall promptly, without cost to Owner and in accordance with Owner's written instructions:

1. correct the defective repairs to the Site or such adjacent areas;

2. correct such defective Work;

3. remove the defective Work from the Project and replace it with Work that is not defective, if the defective Work has been rejected by Owner, and

4. satisfactorily correct or repair or remove and replace any damage to other Work, to the work of others, or to other land or areas resulting from the corrective measures.

B. Owner shall give any such notice of defect within 60 days of the discovery that such Work or repairs is defective. If such notice is given within such 60 days but after the end of the correction period, the notice will be deemed a notice of defective Work under Paragraph 7.17.B.

C. If, after receipt of a notice of defect within 60 days and within the correction period, Contractor does not promptly comply with the terms of Owner's written instructions, or in an emergency where delay would cause serious risk of loss or damage, Owner may have the defective Work corrected or repaired or may have the rejected Work removed and replaced.

Copyright© 2018 National Society of Professional Engineers, American Council of Engineering Companies, and American Society of Civil Engineers. All rights reserved.

Contractor shall pay all costs, losses, and damages (including but not limited to all fees and charges of engineers, architects, attorneys, and other professionals and all court or arbitration or other dispute resolution costs) arising out of or relating to such correction or repair or such removal and replacement (including but not limited to all costs of repair or replacement of work of others). Contractor's failure to pay such costs, losses, and damages within 10 days of invoice from Owner will be deemed the start of an event giving rise to a Claim under Paragraph 12.01.B, such that any related Claim must be brought within 30 days of the failure to pay.

D. In special circumstances where a particular item of equipment is placed in continuous service before Substantial Completion of all the Work, the correction period for that item may start to run from an earlier date if so provided in the Specifications.

E. Where defective Work (and damage to other Work resulting therefrom) has been corrected or removed and replaced under this paragraph, the correction period hereunder with respect to such Work will be extended for an additional period of one year after such correction or removal and replacement has been satisfactorily completed.

F. Contractor's obligations under this paragraph are in addition to all other obligations and warranties. The provisions of this paragraph are not to be construed as a substitute for, or a waiver of, the provisions of any applicable statute of limitation or repose.

ARTICLE 16—SUSPENSION OF WORK AND TERMINATION

16.01 *Owner May Suspend Work*

A. At any time and without cause, Owner may suspend the Work or any portion thereof for a period of not more than 90 consecutive days by written notice to Contractor and Engineer. Such notice will fix the date on which Work will be resumed. Contractor shall resume the Work on the date so fixed. Contractor shall be entitled to an adjustment in the Contract Price or an extension of the Contract Times directly attributable to any such suspension. Any Change Proposal seeking such adjustments must be submitted no later than 30 days after the date fixed for resumption of Work.

16.02 *Owner May Terminate for Cause*

A. The occurrence of any one or more of the following events will constitute a default by Contractor and justify termination for cause:

1. Contractor's persistent failure to perform the Work in accordance with the Contract Documents (including, but not limited to, failure to supply sufficient skilled workers or suitable materials or equipment, or failure to adhere to the Progress Schedule);

2. Failure of Contractor to perform or otherwise to comply with a material term of the Contract Documents;

3. Contractor's disregard of Laws or Regulations of any public body having jurisdiction;

4. Contractor's repeated disregard of the authority of Owner or Engineer:

5. Contractor's failure to timely pay Subcontractors and Suppliers after it receives payment from Owner, or

Copyright© 2018 National Society of Professional Engineers, American Council of Engineering Companies, and American Society of Civil Engineers. All rights reserved.

6. Contractor's failure to obtain or maintain the insurance required of it in the Contract.

B. If one or more of the events identified in Paragraph 16.02.A occurs, then after giving Contractor (and any surety) 5 days' written notice that Owner is considering a declaration that Contractor is in default and termination of the Contract, Owner may proceed to:

1. declare Contractor to be in default, and give Contractor (and any surety) written notice that the Contract is terminated; and

2. enforce the rights available to Owner under any applicable performance bond.

C. Subject to the terms and operation of any applicable performance bond, if Owner has terminated the Contract for cause, Owner may exclude Contractor from the Site, take possession of the Work, incorporate in the Work all materials and equipment stored at the Site or for which Owner has paid Contractor but which are stored elsewhere, and complete the Work as Owner may deem expedient.

D. Owner may not proceed with termination of the Contract under Paragraph 16.02.B if Contractor within 5 days of receipt of notice of intent to terminate begins to correct its failure to perform and proceeds diligently to cure such failure.

E. If Owner proceeds as provided in Paragraph 16.02.B, Contractor shall not be entitled to receive any further payment until the Work is completed. If the unpaid balance of the Contract Price exceeds the cost to complete the Work, including all related claims, costs, losses, and damages (including but not limited to all fees and charges of engineers, architects, attorneys, and other professionals) sustained by Owner, such excess will be paid to Contractor. If the cost to complete the Work including such related claims, costs, losses, and damages exceeds such unpaid balance, Contractor shall pay the difference to Owner. When exercising any rights or remedies under this paragraph, Owner shall not be required to obtain the lowest price for the Work performed.

F. Where Contractor's services have been so terminated by Owner, the termination will not affect any rights or remedies of Owner against Contractor then existing or which may thereafter accrue, or any rights or remedies of Owner against Contractor or any surety under any payment bond or performance bond. Any retention or payment of money due Contractor by Owner will not release Contractor from liability.

G. If and to the extent that Contractor has provided a performance bond under the provisions of Paragraph 6.01.A, the provisions of that bond will govern over any inconsistent provisions of Paragraphs 16.02.B and 16.02.D.

16.03 *Owner May Terminate for Convenience*

A. Upon 5 days' written notice to Contractor and Engineer, Owner may, without cause and without prejudice to any other right or remedy of Owner, terminate the Contract. In such case, Contractor shall be paid for (without duplication of any items):

1. completed and acceptable Work executed in accordance with the Contract Documents prior to the effective date of termination, including fair and reasonable sums for overhead and profit on such Work;

Copyright© 2018 National Society of Professional Engineers, American Council of Engineering Companies, and American Society of Civil Engineers. All rights reserved.

2. expenses sustained prior to the effective date of termination in performing services and furnishing labor, materials, or equipment as required by the Contract Documents in connection with uncompleted Work, plus fair and reasonable sums for overhead and profit on such expenses; and

3. other reasonable expenses directly attributable to termination, such as demobilization expenses, and including costs incurred to prepare a termination for convenience cost proposal. Attorneys' fees, accountant fees, home office overhead and similar expenses shall not be deemed reasonable expenses.

B. Contractor shall not be paid for any loss of anticipated profits or revenue, post-termination overhead costs, or other economic loss arising out of or resulting from such termination.

16.04 *Contractor May Stop Work or Terminate*

A. If, through no act or fault of Contractor, (1) the Work is suspended for more than 90 consecutive days by Owner or under an order of court or other public authority, or (2) Engineer fails to act on any Application for Payment within 30 days after it is submitted, or (3) Owner fails for 30 days to pay Contractor any sum finally determined to be due, then Contractor may, upon 7 days' written notice to Owner and Engineer, and provided Owner or Engineer do not remedy such suspension or failure within that time, terminate the contract and recover from Owner payment on the same terms as provided in Paragraph 16.03. Contractor, however, cannot terminate the Contract due to any dispute (i) concerning the amount of payment due Contractor or (ii) any amounts Owner is withholding from Contractor.

B. In lieu of terminating the Contract and without prejudice to any other right or remedy, if Engineer has failed to act on an Application for Payment within 30 days after it is submitted, or Owner has failed for 30 days to pay Contractor any sum finally determined to be due, Contractor may, 7 days after written notice to Owner and Engineer, stop the Work until payment is made of all such amounts due Contractor, including interest thereon. The provisions of this paragraph are not intended to preclude Contractor from submitting a Change Proposal for an adjustment in Contract Price or Contract Times or otherwise for expenses or damage directly attributable to Contractor's stopping the Work as permitted by this paragraph. Contractor, however, cannot stop the Work due to any dispute (i) concerning the amount of payment due Contractor or (ii) any amounts Owner is withholding from Contractor.

DRAFT

Copyright© 2018 National Society of Professional Engineers, American Council of Engineering Companies, and American Society of Civil Engineers. All rights reserved.

ARTICLE 17—FINAL RESOLUTION OF DISPUTES

17.01 *Deleted in its entirety.*

A. Deleted in its entirety.

1. Deleted in its entirety.

2. Deleted in its entirety.

B. Deleted in its entirety.

1. Deleted in its entirety.

2. Deleted in its entirety.

3. Deleted in its entirety.

1. *Claims, disputes or other matters in question between the parties to this Agreement shall be first subject to pre-suit mediation prior to the filing of any legal claims or litigation. Completion of pre-suit mediation is a condition precedent to litigation. The obligation to mediate is a material and essential provision of the Agreement.*
2. *Unless otherwise agreed in writing, the Contractor shall carry on the Work and maintain its progress during any mediation or litigation, and the Owner shall continue to make payments to the Contractor in accordance with the Contract Documents.*
3. *Either party may initiate a mediation preceding by a request in writing to the other party within a reasonable time after the claim, dispute or other matter in question has arisen or as provided in subparagraph ___, but in no event after the expiration of the applicable statute of limitations.*
4. *The parties shall endeavor in good faith to mutually agree upon an acceptable mediator. In the event the parties have not agreed upon a mediator within thirty (30) days of the request for mediation, the Orlando office of the American Arbitration Association, upon the written request of either party, shall appoint a mediator from its pool of approved mediators.*
5. *Unless otherwise mutually agreed, the mediation shall be held in accordance with the Construction Industry Mediation Rules of the American Arbitration Association currently in effect, each party to bear its own fees, costs and expenses.*
6. *In the event that pre-suit mediation is unsuccessful, all claims, disputes or other matters in question shall be resolved in the Circuit Courts of Volusia County Florida. The Parties, including the*

Copyright© 2018 National Society of Professional Engineers, American Council of Engineering Companies, and American Society of Civil Engineers. All rights reserved.

Contractor's Surety, waive Venue and Jurisdiction of any Federal Court and expressly waive Trial by Jury.

ARTICLE 18—MISCELLANEOUS

18.01 *Giving Notice*

A. Whenever any provision of the Contract requires the giving of written notice to Owner, Engineer, or Contractor, it will be deemed to have been validly given only if delivered:

1. in person, by a commercial courier service or otherwise, to the recipient's place of business;

2. by registered or certified mail, postage prepaid, to the recipient's place of business; or

3. by e-mail to the recipient, with the words "Formal Notice" or similar in the e-mail's subject line.

18.02 *Computation of Times*

A. When any period of time is referred to in the Contract by days, it will be computed to exclude the first and include the last day of such period. If the last day of any such period falls on a Saturday or Sunday or on a day made a legal holiday by the law of the applicable jurisdiction, such day will be omitted from the computation.

18.03 *Cumulative Remedies*

A. The duties and obligations imposed by these General Conditions and the rights and remedies available hereunder to the parties hereto are in addition to, and are not to be construed in any way as a limitation of, any rights and remedies available to any or all of them which are otherwise imposed or available by Laws or Regulations, by special warranty or guarantee, or by other provisions of the Contract. The provisions of this paragraph will be as effective as if repeated specifically in the Contract Documents in connection with each particular duty, obligation, right, and remedy to which they apply.

18.04 *Limitation of Damages*

A. With respect to any and all Change Proposals, Claims, disputes subject to final resolution, and other matters at issue, neither Owner nor Engineer, nor any of their officers, directors, members, partners, employees, agents, consultants, or subcontractors, shall be liable to Contractor for any claims, costs, losses, or damages sustained by Contractor on or in connection with any other project or anticipated project.

18.05 *No Waiver*

A. A party's non-enforcement of any provision will not constitute a waiver of that provision, nor will it affect the enforceability of that provision or of the remainder of this Contract.

18.06 *Survival of Obligations*

A. All representations, indemnifications, warranties, and guarantees made in, required by, or given in accordance with the Contract, as well as all continuing obligations indicated in the

Copyright© 2018 National Society of Professional Engineers, American Council of Engineering Companies, and American Society of Civil Engineers. All rights reserved.

Contract, will survive final payment, completion, and acceptance of the Work or termination of the Contract or of the services of Contractor.

18.07 *Controlling Law*

A. This Contract is to be governed by the law of the State of Florida.

18.08 *Assignment of Contract*

A. Unless expressly agreed to elsewhere in the Contract, no assignment by a party to this Contract of any rights under or interests in the Contract will be binding on the other party without the written consent of the party sought to be bound; and, specifically but without limitation, money that may become due and money that is due may not be assigned without such consent (except to the extent that the effect of this restriction may be limited by law), and unless specifically stated to the contrary in any written consent to an assignment, no assignment will release or discharge the assignor from any duty or responsibility under the Contract.

18.09 *Successors and Assigns*

A. Owner and Contractor each binds itself, its successors, assigns, and legal representatives to the other party hereto, its successors, assigns, and legal representatives in respect to all covenants, agreements, and obligations contained in the Contract Documents.

18.10 *Headings*

A. Article and paragraph headings are inserted for convenience only and do not constitute parts of these General Conditions.

DRAFT

Copyright© 2018 National Society of Professional Engineers, American Council of Engineering Companies, and American Society of Civil Engineers. All rights reserved.

EJCDC PLANS - SJR2C Loop Trail from South of Selin Circle to Herbert Street on file with Margaret Tomlinson, Construction and Engineering Manager

Consisting of 63 Pages

SJR2C LOOP TRAIL (SPRUCE CREEK RD)

FROM SOUTH OF SELIN CIRCLE TO HERBERT STREET

FINANCIAL PROJECT NUMBER: 439865-3-54-01

INDEX OF PLANS

SHEET NO.	SHEET DESCRIPTION
01	KEY SHEET
02	SIGNATURE SHEET
03	SUMMARY OF PAY ITEMS
04	DRAINAGE MAP
05	GENERAL NOTES
06	PROJECT LAYOUT
07	PROJECT CONTROL
08 - 10	TYPICAL SECTION
11	TYPICAL SECTION DETAILS
12 - 15	ROADWAY PLAN
16 - 17	ROADWAY PLAN AND PROFILE
18	GRAVITY WALL PLAN & PROFILE WALL A
19	GRAVITY WALL PLAN & PROFILE WALL B
20 - 40	CROSS SECTION
41	STORMWATER POLLUTION PREVENTION PLAN NOTES
42 - 44	EROSION CONTROL PLAN
45 - 48	WETLAND IMPACTS
49 - 55	SIGNING AND PAVEMENT MARKING PLAN
56	SIGNALIZATION GENERAL NOTES
57	SIGNALIZATION PLAN
58	REPORT OF CORE BORINGS
B1-01	GENERAL NOTES
B1-02	BOARDWALK DATA TABLES
B1-03 - B1-05	BOARDWALK DETAILS

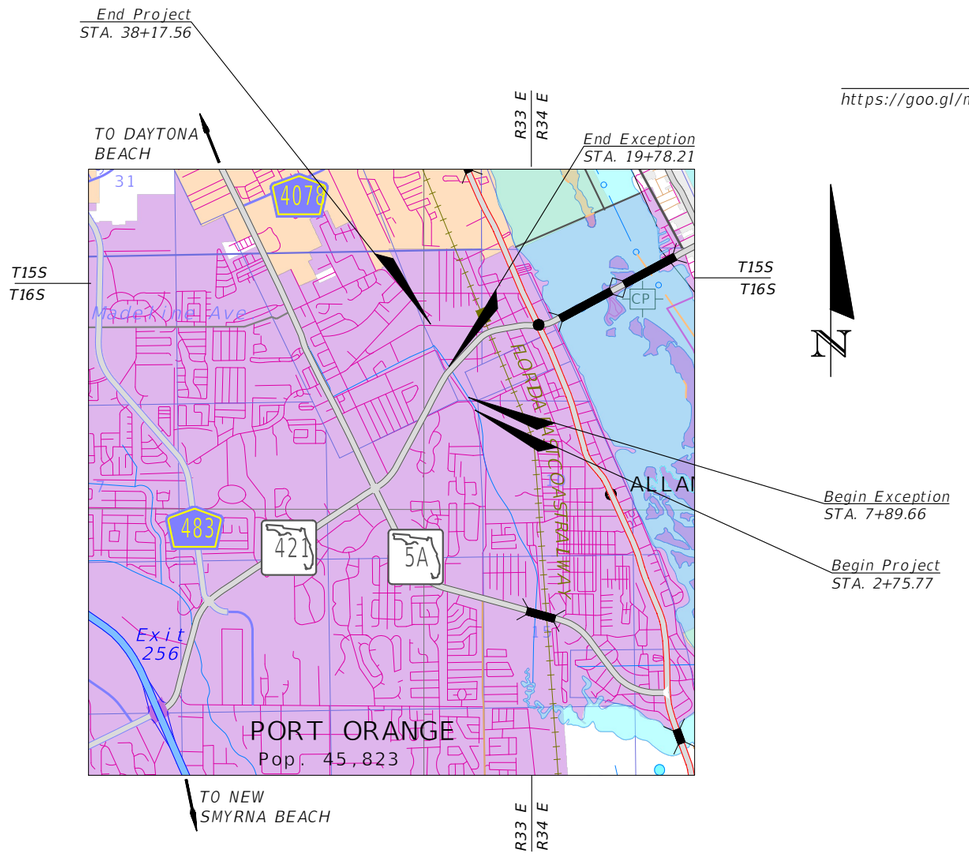

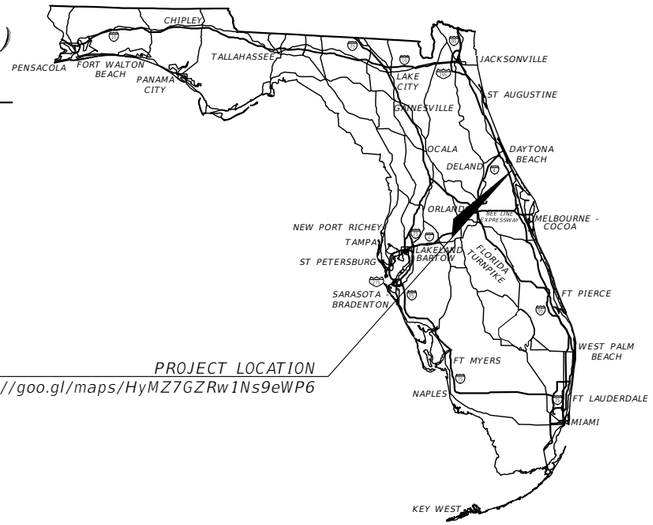

ROADWAY PLANS ENGINEER OF RECORD:

MERLYNN O. ANDERSON, P.E.
P.E. NO.: 83096
STANLEY CONSULTANTS, INC.
80 SPRING VISTA DRIVE
DeBARY, FL 32713

GOVERNING STANDARD PLANS:
Florida Department of Transportation, FY2025-26 Standard plans for Road and Bridge Construction and applicable Interim Revisions (Irs).

Standard Plans for Road Construction and associated Irs are available at the following website:
http://www.fdot.gov/design/Standardplans.shtm

Standard Plans for Bridge Construction are included in the Roadway Plans Component.

GOVERNING STANDARD SPECIFICATIONS:
Florida Department of Transportation, FY2025-26 Standard Specifications for Road and Bridge Construction at the following website:
https://www.fdot.gov/programmanagement/specs.shtm

FISCAL YEAR	SHEET NO.
25	01

THE OFFICIAL RECORD OF THIS SHEET IS THE ELECTRONIC FILE DIGITALLY SIGNED AND SEALED UNDER RULE 61G15-23.004, F.A.C.

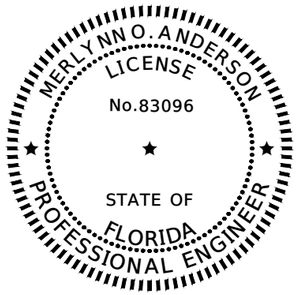

THIS DOCUMENT HAS BEEN DIGITALLY SIGNED AND SEALED BY:

ON THE DATE ADJACENT TO THE SEAL

PRINTED COPIES OF THIS DOCUMENT ARE NOT CONSIDERED SIGNED AND SEALED AND THE SIGNATURE MUST BE VERIFIED ON ANY ELECTRONIC COPIES

STANLEY CONSULTANTS, INC.
80 SPRING VISTA DRIVE
DeBARY, FL 32713
MERLYNN O. ANDERSON, P.E. NO. 83096

THE ABOVE NAMED PROFESSIONAL ENGINEER SHALL BE RESPONSIBLE FOR THE FOLLOWING SHEETS IN ACCORDANCE WITH RULE 61G15-23.004, F.A.C.

SHEET NO.	SHEET DESCRIPTION
01	KEY SHEET
02	SIGNATURE SHEET
03	SUMMARY OF PAY ITEMS
04	DRAINAGE MAP
05	GENERAL NOTES
06	PROJECT LAYOUT
07	PROJECT CONTROL
08-10	TYPICAL SECTION
11	TYPICAL SECTION DETAILS
12-15	ROADWAY PLAN
16-17	ROADWAY PLAN AND PROFILE
18	GRAVITY WALL PLAN & PROFILE WALL A
19	GRAVITY WALL PLAN & PROFILE WALL B
20-40	CROSS SECTION
41	STORMWATER POLLUTION PREVENTION PLAN NOTES
42-44	EROSION CONTROL PLAN
45-48	WETLAND IMPACTS
49-55	SIGNING AND PAVEMENT MARKING PLAN
56	SIGNALIZATION GENERAL NOTES
57	SIGNALIZATION PLAN

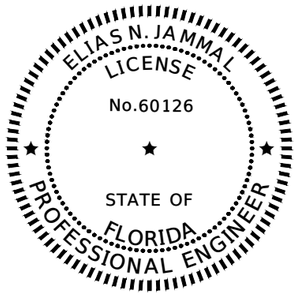

THIS DOCUMENT HAS BEEN DIGITALLY SIGNED AND SEALED BY:

ON THE DATE ADJACENT TO THE SEAL

PRINTED COPIES OF THIS DOCUMENT ARE NOT CONSIDERED SIGNED AND SEALED AND THE SIGNATURE MUST BE VERIFIED ON ANY ELECTRONIC COPIES

TERRACON
1675 LEE ROAD
WINTER PARK, FL 32789
ELIAS N. JAMMAL, P.E. NO. 60126

THE ABOVE NAMED PROFESSIONAL ENGINEER SHALL BE RESPONSIBLE FOR THE FOLLOWING SHEETS IN ACCORDANCE WITH RULE 61G15-23.004, F.A.C.

SHEET NO.	SHEET DESCRIPTION
02	SIGNATURE SHEET
58	REPORT OF CORE BORINGS

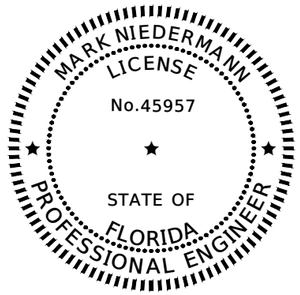

THIS DOCUMENT HAS BEEN DIGITALLY SIGNED AND SEALED BY:

ON THE DATE ADJACENT TO THE SEAL

PRINTED COPIES OF THIS DOCUMENT ARE NOT CONSIDERED SIGNED AND SEALED AND THE SIGNATURE MUST BE VERIFIED ON ANY ELECTRONIC COPIES

FLORIDA BRIDGE & TRANSPORTATION, INC.
633 DARTMOUTH STREET
ORLANDO, FL 32804
MARK NIEDERMANN, P.E. NO. 45957

THE ABOVE NAMED PROFESSIONAL ENGINEER SHALL BE RESPONSIBLE FOR THE FOLLOWING SHEETS IN ACCORDANCE WITH RULE 61G15-23.004, F.A.C.

SHEET NO.	SHEET DESCRIPTION
02	SIGNATURE SHEET
B1-01	GENERAL NOTES
B1-02	BOARDWALK DATA TABLES
B1-03 - B1-05	BOARDWALK DETAILS

REVISIONS	
DATE	DESCRIPTION

CITY OF PORT ORANGE
1000 CITY CENTER CIRCLE
PORT ORANGE, FL 32129

MERLYNN O. ANDERSON, P.E.
P.E. LICENSE NUMBER 83096

STANLEY CONSULTANTS, INC.
80 SPRING VISTA DRIVE
DEBARY, FL 32713

SJR2C LOOP TRAIL
FROM SOUTH OF SELIN CIR TO HERBERT ST

ROAD	COUNTY	FINANCIAL PROJECT ID
SPRUCE CREEK RD	VOLUSIA	439865-3-54-01

SIGNATURE SHEET

SHEET NO. 02

PAY ITEM NO.	PAY ITEM DESCRIPTION	UNIT	QUANTITY
I. BASE BID			
0101 1	MOBILIZATION	LS	1
0102 1	MAINTENANCE OF TRAFFIC	LS	1
0104 10 3	SEDIMENT BARRIER	LF	5,168
0104 11	FLOATING TURBIDITY BARRIER	LF	200
0104 18	INLET PROTECTION SYSTEM	EA	3
0110 1 1	CLEARING & GRUBBING	AC	0.689
0110 2 2	SELECTIVE CLEARING AND GRUBBING, AREAS WITH TREES TO REMAIN	AC	0.529
0110 23	TREE REMOVAL	EA	5
0110 4 10	REMOVAL OF EXISTING CONCRETE	SY	189
0120 1	REGULAR EXCAVATION	CY	68.0
0120 6	EMBANKMENT	CY	215.0
0160 4	TYPE B STABILIZATION	SY	1,038
285701-A	DENSE GRADED AGGREGATE BASE (98% MOD PROCTOR DENSITY) 3" THICK	SY	1,038
0334 1 12	SUPERPAVE ASPHALTIC CONC, TRAFFIC B	TN	342.5
0400 0 11	CONCRETE CLASS NS, GRAVITY WALL INDEX 400-011	CY	83.3
0425 1521	INLETS, DT BOT, TYPE C,<10'	EA	3
0425 5	MANHOLE, ADJUST	EA	1
0430174118	PIPE CULVERT, OPTIONAL MATERIAL, ROUND, 18"SD	LF	131
0430174124	PIPE CULVERT, OPTIONAL MATERIAL, ROUND, 24"SD	LF	29
0430982125	MITERED END SECTION, OPTIONAL ROUND, 18" CD	EA	3
0430982129	MITERED END SECTION, OPTIONAL ROUND, 24" CD	EA	1
0430984125	MITERED END SECTION, OPTIONAL ROUND, 18" SD	EA	1
0515 1 2	PIPE HANDRAIL - GUIDERAIL, ALUMINUM	LF	308
0520 1 10	CONCRETE CURB & GUTTER, TYPE F	LF	180
0522 1	CONCRETE SIDEWALK AND DRIVEWAYS, 4" THICK	SY	485
0522 2	CONCRETE SIDEWALK AND DRIVEWAYS, 6" THICK	SY	284
0527 2	DETECTABLE WARNINGS	SF	287
0570 1 2	PERFORMANCE TURF, SOD	SY	2,558
0630 2 11	CONDUIT, FURNISH & INSTALL, OPEN TRENCH	LF	364
0630 2 12	CONDUIT, FURNISH & INSTALL, DIRECTIONAL BORE	LF	120
0630 2 14	CONDUIT, FURNISH & INSTALL, ABOVEGROUND	LF	90
0630 2 15	CONDUIT, FURNISH & INSTALL, BRIDGE MOUNT	LF	697
0632 7 2	SIGNAL CABLE- REPAIR/REPLACE/OTHER, FURNISH & INSTALL	LF	50
0633 6	FIBER OPTIC CABLE LOCATOR	DA	1
0635 2 11	PULL & SPLICE BOX, F&I, 13" x 24" COVER SIZE	EA	15
0635 3 11	JUNCTION BOX, FURNISH & INSTALL, AERIAL	EA	12
0639 1112	ELECTRICAL POWER SERVICE, F&I, OVERHEAD METER PURCHASED BY CONTRACTOR FROM POWER COMPANY	AS	4
0639 2 1	ELECTRICAL SERVICE WIRE, FURNISH & INSTALL	LF	360
0639 3 11	ELECTRICAL SERVICE DISCONNECT, F&I, POLE MOUNT	EA	1
0641 2 12	PRESTRESSED CONCRETE POLE, F&I, TYPE P-II SERVICE POLE	EA	4
0646 1 11	ALUMINUM SIGNALS POLE, PEDESTAL	EA	2
0646 1 12	ALUMINUM SIGNALS POLE, FURNISH & INSTALL PEDESTRIAN DETECTOR POST	EA	6
0653 1 11	PEDESTRIAN SIGNAL, FURNISH & INSTALL LED COUNTDOWN, 1 WAY	AS	2
0653 1 60	PEDESTRIAN SIGNAL, REMOVE PED SIGNAL- POLE/PEDESTAL TO REMAIN	AS	2
0654 2 12	MIDBLOCK CROSSWALK: RECTANGULAR RAPID FLASHING BEACON, FURNISH & INSTALL- AC, COMPLETE SIGN ASSEMBLY- BACK TO BACK	AS	6
0665 1 11	PEDESTRIAN DETECTOR, FURNISH & INSTALL, STANDARD	EA	2
0665 1 60	PEDESTRIAN DETECTOR, REMOVE- POLE/PEDESTAL TO REMAIN	EA	2
0700 1111	SINGLE COLUMN GROUND SIGN ASSEMBLY, F&I GROUND MOUNT, LESS THAN 12 SF	EA	20
0700 1600	SINGLE COLUMN GROUND SIGN ASSEMBLY, REMOVE	EA	3
0711 11123	THERMOPLASTIC, STANDARD, WHITE, SOLID, 12" FOR CROSSWALK AND ROUNDABOUT	LF	442
0711 11125	THERMOPLASTIC, STANDARD, WHITE, SOLID, 24" FOR STOP LINE AND CROSSWALK	LF	470
0711 11170	THERMOPLASTIC, STANDARD, WHITE, ARROW	EA	2
0711 16101	THERMOPLASTIC, STANDARD-OTHER SURFACES, WHITE, SOLID, 6"	GM	0.003
0711 17 1	THERMOPLASTIC, REMOVE EXISTING THERMOPLASTIC PAVEMENT MARKINGS-SURFACE TO REMAIN	SF	317
0715 1 12	LIGHTING CONDUCTORS, F&I, INSULATED, NO.8 - 6	LF	3,247
0715 516-513	LIGHT POLE COMPLETE-SPECIAL DESIGN, F&I, POLE TOP MOUNT, WOOD, 13'	EA	11
0715 516-518	LIGHT POLE COMPLETE-SPECIAL DESIGN, F&I, POLE TOP MOUNT, WOOD, 18'	EA	1
0751 49	TIMBER PEDESTRIAN BRIDGE	SF	5,472

PAY ITEM NO.	PAY ITEM DESCRIPTION	UNIT	QUANTITY
II. NONELIGIBLE ITEMS			
0522 2A	CONCRETE SHARED USE PATH, 7" THICK (HEAVY DUTY) (IN LIEU OF 4" THICK)	SY	47
CITY-01	18" WAPRO STAINLESS WASTOP INLINE CHECK VALVE	EA	1

PAY ITEM NOTES

PAY ITEM NO. 100 1 1 - CLEARING & GRUBBING
INCLUDES ALL COSTS FOR THE CONTRACTOR TO STAKEOUT THE ALIGNMENT OF THE BOARDWALK FOR THE CITY'S VISUAL INSPECTION AND DETERMINATION OF VEGETATION TO BE REMOVED.

PAY ITEM NO. 751-49 - TIMBER PEDESTRIAN BRIDGE
INCLUDES ALL COSTS ASSOCIATED WITH THE CONSTRUCTION OF THE BOARDWALK.

PAY ITEM NO. CITY-01 - 18" WAPRO STAINLESS WASTOP INLINE CHECK VALVE
INCLUDES ALL COSTS ASSOCIATED WITH FURNISHING AND INSTALLING THE WAPRO STAINLESS WASTOP INLINE CHECK VALVE, OR APPROVED EQUAL, ON DRAINAGE STRUCTURE S-104 LOCATED AT STATION 23+60.04 (48.42' RT.).

THE OFFICIAL RECORD OF THIS SHEET IS THE ELECTRONIC FILE DIGITALLY SIGNED AND SEALED UNDER RULE 61G15-23.004, F.A.C.

REVISIONS	
DATE	DESCRIPTION

CITY OF PORT ORANGE
1000 CITY CENTER CIRCLE
PORT ORANGE, FL 32129

MERLYNN O. ANDERSON, P.E.
P.E. LICENSE NUMBER 83096

STANLEY CONSULTANTS, INC.
80 SPRING VISTA DRIVE
DEBARY, FL 32713

SJR2C LOOP TRAIL
FROM SOUTH OF SELIN CIR TO HERBERT ST

ROAD	COUNTY	FINANCIAL PROJECT ID
SPRUCE CREEK RD	VOLUSIA	439865-3-54-01

SUMMARY OF PAY ITEMS

SHEET NO. 03

S-101
STA 20+85.00 (84.43 Rt.)
CONST. INLET TYPE C
INDEX NO. 425-052
TOP EL. = 4.00'
FL 1.00 W (18" X 18")

S-102
STA 20+96.68 (45.17 Rt.)
CONST. CD MES (1:2)
INDEX NO. 430-021
FL 0.80 (18" X 18")

S-103
STA 23+60.04 (91.08 Rt.)
CONST. INLET TYPE C
INDEX NO. 425-052
TOP EL. = 3.43'
FL 0.62 SW (18")

S-104
STA 23+60.04 (48.42 Rt.)
CONST. CD MES (1:2)
INDEX NO. 430-021
(WITH INLINE CHECK VALVE)
FL 0.83 (18")

S-105
STA 24+69.98 (90.14 Rt.)
CONST. SD MES (1:4)
INDEX NO. 430-022
FL 2.71 (18")

S-106
STA 24+92.92 (49.05 Rt.)
CONST. CD MES (1:2)
INDEX NO. 430-021
FL 2.00 (18")

S-107
STA 28+95.94 (25.25 Rt.)
CONST. INLET TYPE C
INDEX NO. 425-052
TOP EL. = 5.40'
FL 0.36 SW (24")

S-108
STA 28+92.24 (2.98 Lt.)
CONST. CD MES (1:2)
INDEX NO. 430-021
FL 0.36 (24")

N
1" = 300'

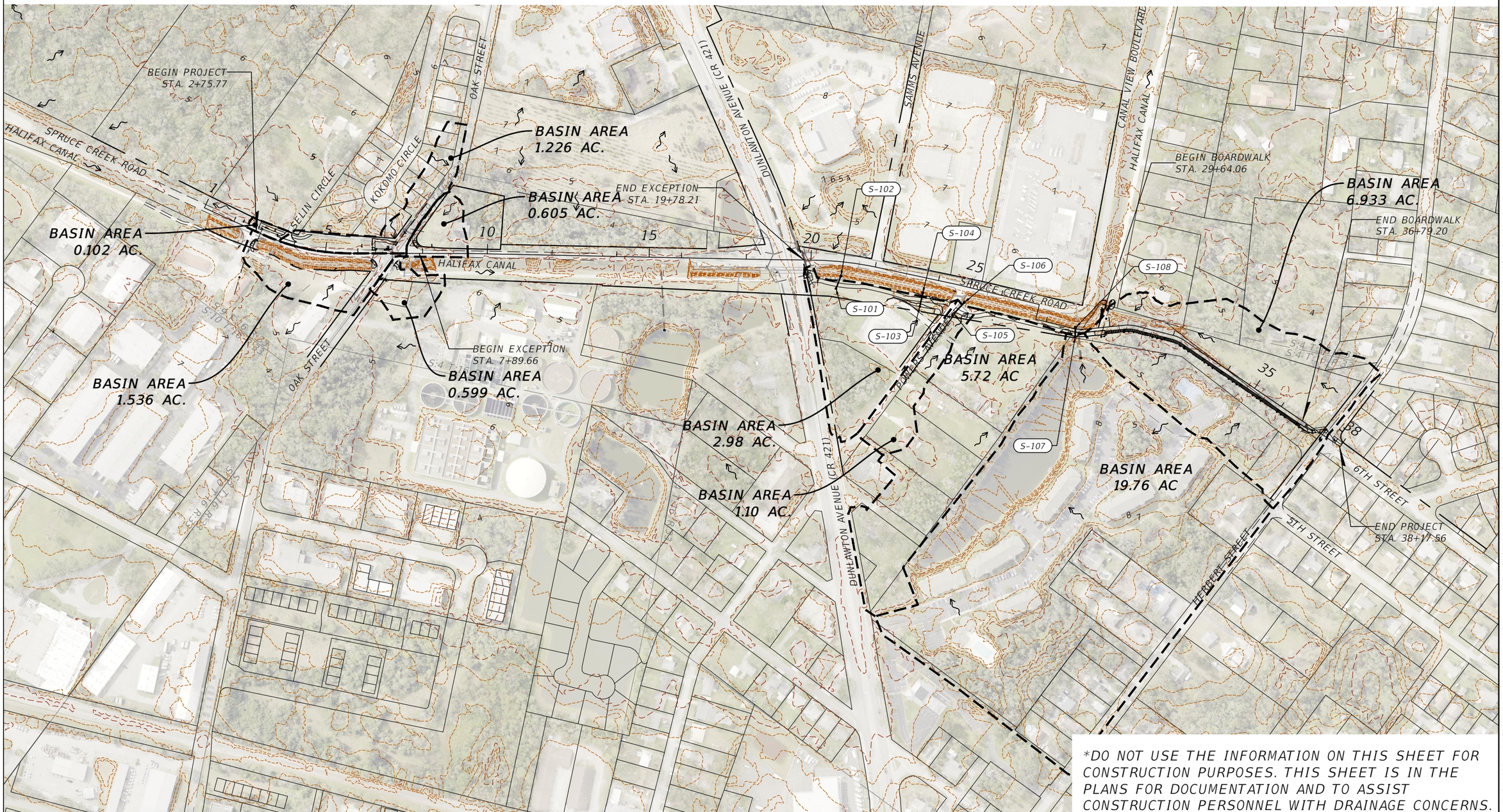

*DO NOT USE THE INFORMATION ON THIS SHEET FOR CONSTRUCTION PURPOSES. THIS SHEET IS IN THE PLANS FOR DOCUMENTATION AND TO ASSIST CONSTRUCTION PERSONNEL WITH DRAINAGE CONCERNS.

THE OFFICIAL RECORD OF THIS SHEET IS THE ELECTRONIC FILE DIGITALLY SIGNED AND SEALED UNDER RULE 61G15-23.004, F.A.C.

REVISIONS	
DATE	DESCRIPTION

CITY OF PORT ORANGE
1000 CITY CENTER CIRCLE
PORT ORANGE, FL 32129

MERLYNN O. ANDERSON, P.E.
P.E. LICENSE NUMBER 83096

STANLEY CONSULTANTS, INC.
80 SPRING VISTA DRIVE
DEBARY, FL 32713

SJR2C LOOP TRAIL
FROM SOUTH OF SELIN CIR TO HERBERT ST

ROAD	COUNTY	FINANCIAL PROJECT ID
SPRUCE CREEK RD	VOLUSIA	439865-3-54-01

DRAINAGE MAP

SHEET NO. 04

O'Neill, Karen 5/14/2025 12:30:14 PM Z:\2016 Projects\10962 (Port Orange)\TW0 09 - SUNTrail (SJR2C Loop) Spruce Creek Rd\CAD\439865\Drainage\DRMPRD01.dwg

GENERAL NOTES

1. BENCHMARK ELEVATIONS SHOWN ON THE PLANS ARE NORTH AMERICAN VERTICAL DATUM OF 1988 (NAVD88).

2. ALL SURVEY INFORMATION WAS OBTAINED FROM LICENSED FLORIDA PROFESSIONAL SURVEYORS AND MAPPERS AND UTILIZED AS SUPPORTING DATA IN THE PRODUCTION OF DESIGN PLANS AND FOR CONSTRUCTION ON SUBJECT PROJECT. THE PROFESSIONAL SURVEYORS AND MAPPERS OF RECORD ARE:

   DAVID A. WHITE, P.S.M.
   P.S.M. NO.: 4044
   PEC SURVEYING AND MAPPING, LLC
   2100 ALAFAYA TRAIL, SUITE 203
   OVIEDO, FL 32765
   CERTIFICATE OF AUTHORIZATION: LB 7808

3. THE LOCATION(S) OF THE UTILITIES SHOWN IN THE PLANS (INCLUDING THOSE DESIGNATED Vv, Vh and Vvh) ARE BASED ON LIMITED INVESTIGATION TECHNIQUES AND SHOULD BE CONSIDERED APPROXIMATE ONLY. THE VERIFIED LOCATIONS / ELEVATIONS APPLY ONLY AT THE POINTS SHOWN. INTERPOLATIONS BETWEEN THESE POINTS HAVE NOT BEEN VERIFIED.

4. UTILITY / AGENCY OWNERS:

COMPANY	CONTACT	TELEPHONE NUMBERS
AT&T (TELEPHONE)	KIRBY SPENCER	(386) 366-4588
CENTURY LINK	DINA DOMINGUEZ	(407) 830-3650
CHARTER COMM.	PAUL LIAKOS	(407) 215-8838
CITY OF PORT ORANGE	JUNOS REED	(386) 506-5754
CROWN CASTLE	DANNY HASKETT	(786) 246-7827
FLORIDA POWER & LIGHT (VOLUSIA)	CHRISTOPHER BUONANNI	(386) 668-9842
TECO PEOPLES GAS	BRUCE STOUT	(407) 420-2678
UNITI FIBER LLC	TRAVIS GEORGE	(251) 487-7225
VOLUSIA TRAFFIC LOCATES		(386) 736-5968

5. MAINTENANCE OF TRAFFIC SHALL BE IN ACCORDANCE WITH FDOT STANDARD INDEX 102-600 SERIES; SPECIFIC ATTENTION IS DIRECTED TO FDOT STANDARD INDEX NUMBER 102-600, 102-601, 102-602, 102-603, 102-604, 102-613 AND 102-625 FOR MAINTENANCE OF VEHICULAR TRAFFIC, AND FDOT STANDARD INDEX NUMBERS 102-660 AND 102-661 FOR MAINTENANCE OF PEDESTRIAN AND BICYCLE TRAFFIC. CONTRACTOR TO PREPARE AND SUBMIT TEMPORARY TRAFFIC CONTROL PLANS INCLUDING PEDESTRIAN TEMPORARY DETOURS TO THE CITY FOR APPROVAL.

6. PROPOSED CONSTRUCTION SHALL COMPLY WITH THE AMERICANS WITH DISABILITIES ACT (ADA), THE ADA COMPLIANCE HANDBOOK, LATEST EDITION, AND THE FLORIDA ACCESSIBILITY CODE.

7. SPECIAL EVENT DAYS FOR THIS PROJECT INCLUDE:
   HOLIDAY PARADE

8. COMPLY WITH FLORIDA DEPARTMENT OF TRANSPORTATION STANDARD SPECIFICATIONS ARTICLE 7-11. SPECIAL ATTENTION SHOULD BE GIVEN TO LOCATING AND AVOIDING FLORIDA DEPARTMENT OF TRANSPORTATION FIBER OPTIC CABLING. IF FLORIDA DEPARTMENT OF TRANSPORTATION FIBER OPTIC CABLING IS IMPACTED BY THE CONTRACTOR, TEMPORARY AND PERMANENT REPAIRS MUST BE COMPLETED CONSISTENT WITH ARTICLE 7-11: THE CABLING MUST BE REPLACED SO AS TO NOT INCREASE FIBER LINK ATTENUATION ABOVE EXISTING CONDITIONS. ACCORDINGLY, NO NEW SPLICES OR CONNECTORS MAY BE ADDED IN EXCESS OF EXISTING CONDITIONS, RESULTING IN THE NEED TO REPLACE EXISTING DAMAGED FIBER OPTIC CABLE FROM BUTT SPLICE TO BUTT SPLICE OR BETWEEN TERMINATIONS WITH NEW FIBER OPTIC CABLING THAT IS EQUAL TO OR BETTER THAN THE EXISTING CABLING BEING REPLACED.

9. WITHIN THE VICINITY OF THE PROPOSED BOARDWALK, EXISTING TREES SHOWN WITHIN THESE PLANS ARE ONLY THOSE THAT WERE SURVEYED IN ACCORDANCE WITH THE CITY'S SPECIMEN TREE PROTECTION REQUIREMENTS WITHIN CHAPTER 9, ARTICLE II, SECTION 16 OF THE CITY'S LAND DEVELOPMENT CODE. HOWEVER ADDITIONAL EXISTING VEGETATION AND TREES ARE PRESENT, ESPECIALLY WITHIN THE VICINITY OF THE PROPOSED BOARDWALK.

10. THE CONTRACTOR SHALL BE REQUIRED TO STAKEOUT THE ALIGNMENT OF THE PROPOSED BOARDWALK FOR THE CITY TO VISUALLY INSPECT THE PROPOSED CLEARING LIMITS PRIOR TO ANY CONSTRUCTION IN THE VICINITY OF THE PROPOSED BOARDWALK. DURING THE INSPECTION THE CITY WILL DETERMINE THE EXTENT OF EXISTING VEGETATION AND/OR TREES TO BE REMOVED, OVER AND BEYOND THOSE SPECIMEN TRESS THAT ARE SPECIFICALLY DENOTED FOR REMOVAL

THE OFFICIAL RECORD OF THIS SHEET IS THE ELECTRONIC FILE DIGITALLY SIGNED AND SEALED UNDER RULE 61G15-23.004, F.A.C.

REVISIONS	
DATE	DESCRIPTION

CITY OF PORT ORANGE
1000 CITY CENTER CIRCLE
PORT ORANGE, FL 32129

MERLYNN O. ANDERSON, P.E.
P.E. LICENSE NUMBER 83096

STANLEY CONSULTANTS, INC.
80 SPRING VISTA DRIVE
DEBARY, FL 32713

SJR2C LOOP TRAIL
FROM SOUTH OF SELIN CIR TO HERBERT ST

ROAD	COUNTY	FINANCIAL PROJECT ID
SPRUCE CREEK RD	VOLUSIA	439865-3-54-01

GENERAL NOTES

SHEET NO. 05

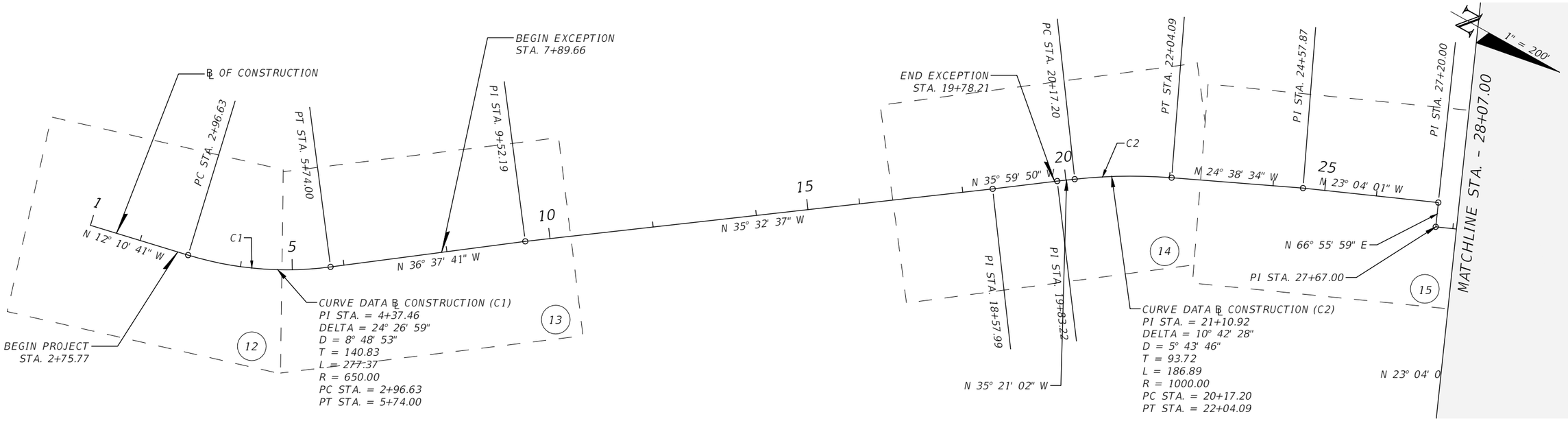

THE OFFICIAL RECORD OF THIS SHEET IS THE ELECTRONIC FILE DIGITALLY SIGNED AND SEALED UNDER RULE 61G15-23.004, F.A.C.

REVISIONS	
DATE	DESCRIPTION

CITY OF PORT ORANGE
1000 CITY CENTER CIRCLE
PORT ORANGE, FL 32129

MERLYNN O. ANDERSON, P.E.
P.E. LICENSE NUMBER 83096

STANLEY CONSULTANTS, INC.
80 SPRING VISTA DRIVE
DEBARY, FL 32713

SJR2C LOOP TRAIL
FROM SOUTH OF SELIN CIR TO HERBERT ST

ROAD	COUNTY	FINANCIAL PROJECT ID
SPRUCE CREEK RD	VOLUSIA	439865-3-54-01

PROJECT LAYOUT

SHEET NO. 06

O'Neill, Karen 5/14/2025 12:30:33 PM Z:\2016 Projects\10962 (Port Orange)\TWO 09 - SUNTrail (SJR2C Loop) Spruce Creek Rd\CAD\439865\Roadway\PLAYRD01.dwg

℄ OF SURVEY

CURVE DATA ℄ CONSTRUCTION (C1)
PI STA. = 4+37.46
DELTA = 24° 26' 59"
D = 8° 48' 53"
T = 140.83
L = 277.37
R = 650.00
PC STA. = 2+96.63
PT STA. = 5+74.00

BEGIN EXCEPTION
STA. 7+89.66

PT STA. 5+74.00

PI STA. 9+52.19

℄ OF CONSTRUCTION

S:9 T:16 R:33
S:4 T:16 R:33
S:4 T:16 R:33

FOUND 5/8" REBAR NO ID

FOUND N&D LB 3019

END EXCEPTION
STA. 19+78.21

PC STA. 20+17.20

PT STA. 22+04.09

PI STA. 24+57.87

SET N&D TRAV PT LB 7808

MATCHLINE STA. - 25+80.00

1" = 200'

SET 5/8" IRC WITNESS LB 7808

170.76

SET 5/8" IRC WITNESS LB 7808

84.46

318°16'15"

SET IRC TRAV PT LB 7808

N 12° 10' 41" W

BEGIN PROJECT
STA. 2+75.77

SET "X" CUT IN SIDEWALK

C1

PC STA. 2+96.63

S:9 T:16 R:33
S:10 T:16 R:33

FOUND 5/8" IRC LB 4567

FOUND 5/8" IRC LB 3019

FOUND 5/8" IRC LB 3019

FOUND 5/8" IRC CAN'T READ

FOUND N&D LB 3019

293°36'59"

SET IRC TRAV PT LB 7808

109.58

279.90

SET 5/8" IRC WITNESS LB 7808

SET 5/8" IRC WITNESS LB 7808

N 36° 37' 41" W

N 35° 32' 37" W

N 35° 59' 50" W

PI STA. 18+57.99

SET IRC TRAV PT LB 7808

98°05'27"

59.08

120.41

SET 5/8" IRC WITNESS LB 7808

SET 5/8" IRC WITNESS LB 7808

FOUND 5/8" IRC LB 3019

SET IRC TRAV PT LB 7808

PI STA. 19+83.22
N 35° 21' 02" W

FOUND 5/8" REBAR NO ID

FOUND 5/8" REBAR NO ID

FOUND 1/2" REBAR NO ID

SET 5/8" IRC WITNESS LB 7808

SET 5/8" IRC WITNESS LB 7808

℄ OF SURVEY

SET IRC TRAV PT LB 7808

261°48'47"

121.56

61.24

CURVE DATA ℄ CONSTRUCTION (C2)
PI STA. = 21+10.92
DELTA = 10° 42' 28"
D = 5° 43' 46"
T = 93.72
L = 186.89
R = 1000.00
PC STA. = 20+17.20
PT STA. = 22+04.09

N 24° 38' 34" W

BEGIN BOARDWALK
STA. 29+84.06

SET 5/8" IRC WITNESS LB 7808

231.22'

SET N&D WITNESS LB 7808

116.58'

PI STA. 27+20.00

23° 04' 01" W

N 66° 55' 59" E SET IRC TRAV PT LB 7808

82°44'02"

PI STA. 27+67.00

TBM 1383
EL. 5.215'
SET IRC
TRAV PT LB 7808

FOUND 3/4" REBAR NO ID

FOUND 5/8" IRC SLIGER LB 3019

FOUND 5/8" IRC SLIGER LB 4567

N 22° 25' 51" W

N 42° 25' 51" W

FOUND 1/2" REBAR NO ID (TOP BENT EAST)

PT STA. 29+20.74

PC STA. 30+43.11

PT STA. 30+86.39

PC STA. 31+96.21

PT STA. 32+39.50

N 02° 35' 51" W

CURVE DATA ℄ CONSTRUCTION (C3)
PI STA. = 29+04.34
DELTA = 19° 21' 50"
D = 58° 27' 54"
T = 16.72
L = 33.12
R = 98.00
PC STA. = 28+87.62
PT STA. = 29+20.74

PC STA. 28+87.62

CURVE DATA ℄ CONSTRUCTION (C4)
PI STA. = 30+64.97
DELTA = 20° 00' 00"
D = 46° 12' 23"
T = 21.86
L = 43.28
R = 124.00
PC STA. = 30+43.11
PT STA. = 30+86.39

CURVE DATA ℄ CONSTRUCTION (C5)
PI STA. = 32+18.08
DELTA = 20° 00' 00"
D = 46° 12' 23"
T = 21.86
L = 43.28
R = 124.00
PC STA. = 31+96.21
PT STA. = 32+39.50

℄ OF CONSTRUCTION

S:4 T:16 R:33
S:4 T:16 R:33

℄ OF SURVEY

FOUND 5/8" IRC CAN'T READ

SET H&T POL

FOUND 5/8" IRC PSM 5095

FOUND 1/2" REBAR NO ID

END BOARDWALK
STA. 36+79.20

N 07° 03' 27" W

FOUND 1/2" REBAR NO ID

FOUND NAIL & WASHER, NO ID

FOUND 1/2" PIPE NO ID

FOUND 1/2" IRC PHILLIPS RLS 2048

FOUND 5/8" IRC SLIGER LB 3612

SET N&D TRAV PT LB 7808

FOUND 3/4" PIPE NO ID

129.47

S 88° 30' 59" E

SET 5/8" IRC WITNESS LB 7808

℄ OF SURVEY

END PROJECT
STA. 38+17.56

MATCHLINE STA. - 25+80.00

1" = 200'

THE OFFICIAL RECORD OF THIS SHEET IS THE ELECTRONIC FILE DIGITALLY SIGNED AND SEALED UNDER RULE 61G15-23.004, F.A.C.

REVISIONS	
DATE	DESCRIPTION

CITY OF PORT ORANGE
1000 CITY CENTER CIRCLE
PORT ORANGE, FL 32129

MERLYNN O. ANDERSON, P.E.
P.E. LICENSE NUMBER 83096

STANLEY CONSULTANTS, INC.
80 SPRING VISTA DRIVE
DEBARY, FL 32713

SJR2C LOOP TRAIL
FROM SOUTH OF SELIN CIR TO HERBERT ST

ROAD	COUNTY	FINANCIAL PROJECT ID
SPRUCE CREEK RD	VOLUSIA	439865-3-54-01

PROJECT CONTROL

SHEET NO. 07

O'Neill, Karen 5/14/2025 12:30:47 PM
Z:\2016 Projects\10962 (Port Orange)\TWO 09 - SUNTrail (SJR2C Loop) Spruce Creek Rd\CAD\439865\Survey\CTLSRD01.dwg

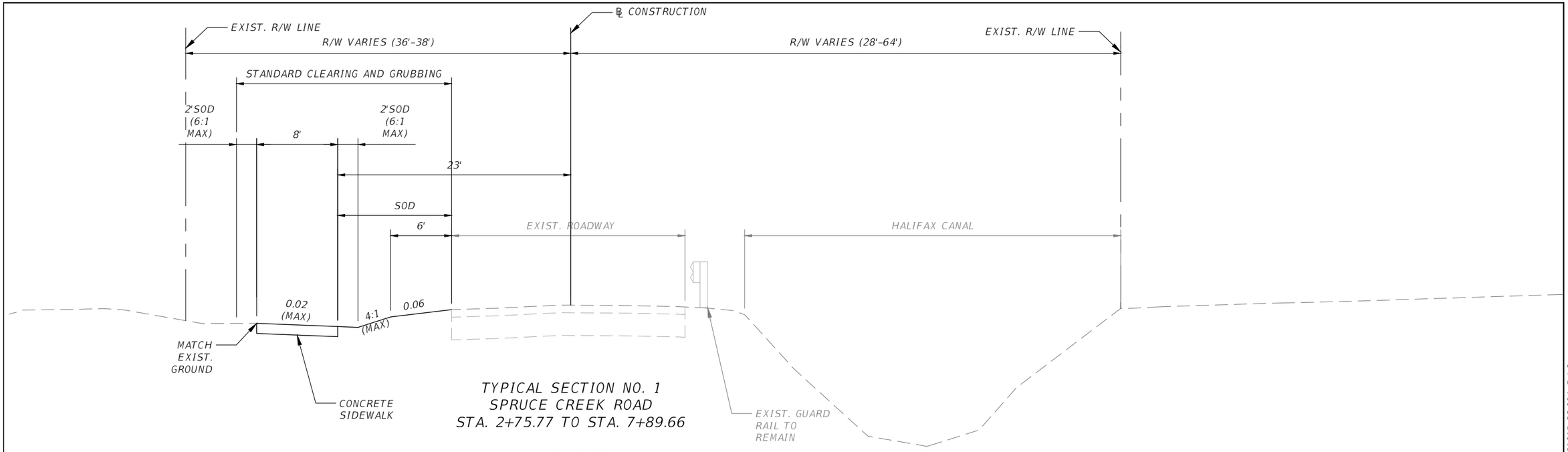

TYPICAL SECTION NO. 1
SPRUCE CREEK ROAD
STA. 2+75.77 TO STA. 7+89.66

EXCEPTION
STA. 7+89.66 TO STA. 19+78.21

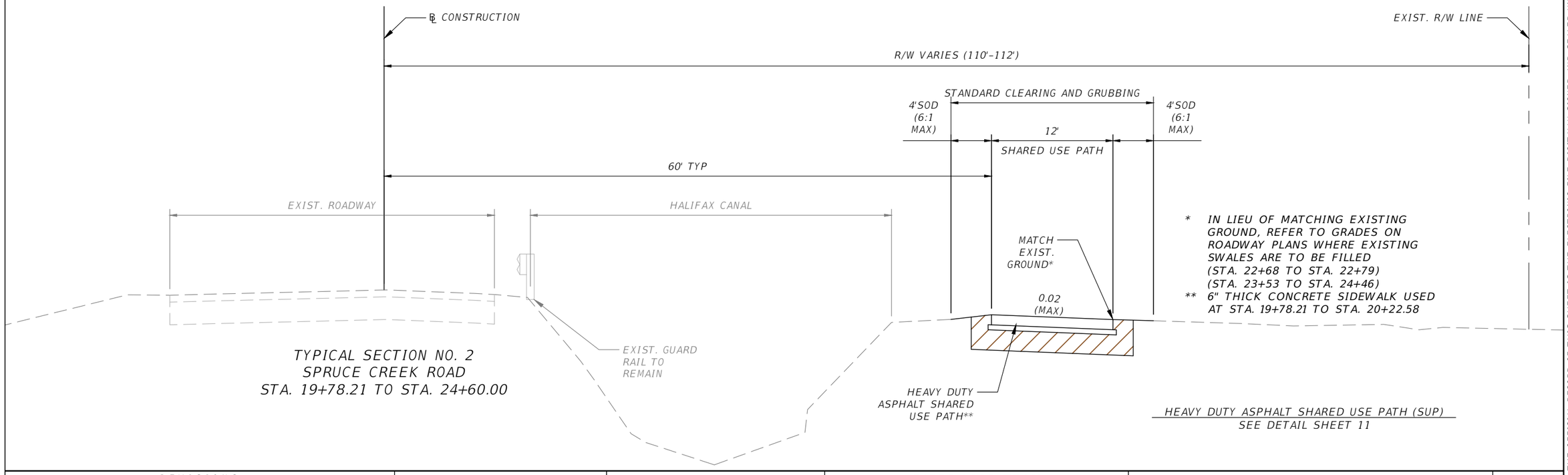

TYPICAL SECTION NO. 2
SPRUCE CREEK ROAD
STA. 19+78.21 TO STA. 24+60.00

THE OFFICIAL RECORD OF THIS SHEET IS THE ELECTRONIC FILE DIGITALLY SIGNED AND SEALED UNDER RULE 61G15-23.004, F.A.C.

REVISIONS	
DATE	DESCRIPTION

CITY OF PORT ORANGE
1000 CITY CENTER CIRCLE
PORT ORANGE, FL 32129

MERLYNN O. ANDERSON, P.E.
P.E. LICENSE NUMBER 83096

STANLEY CONSULTANTS, INC.
80 SPRING VISTA DRIVE
DEBARY, FL 32713

SJR2C LOOP TRAIL
FROM SOUTH OF SELIN CIR TO HERBERT ST

ROAD	COUNTY	FINANCIAL PROJECT ID
SPRUCE CREEK RD	VOLUSIA	439865-3-54-01

TYPICAL SECTION

SHEET NO. 08

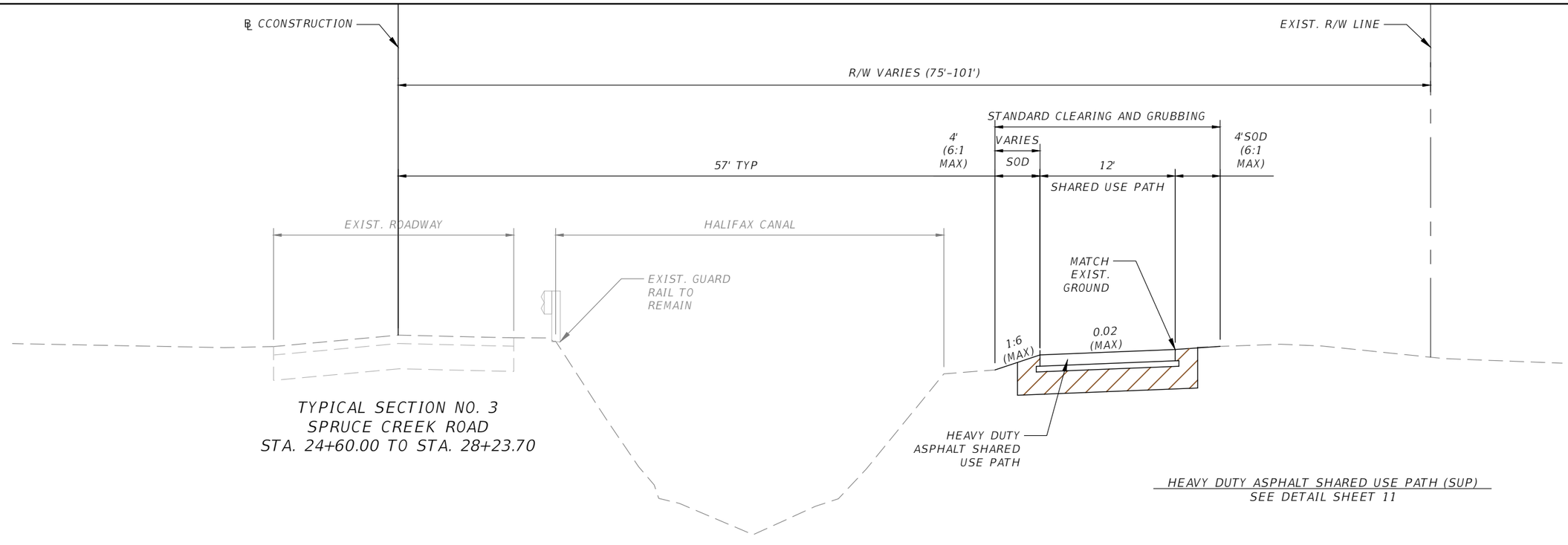

TYPICAL SECTION NO. 3
SPRUCE CREEK ROAD
STA. 24+60.00 TO STA. 28+23.70

HEAVY DUTY ASPHALT SHARED USE PATH (SUP)
SEE DETAIL SHEET 11

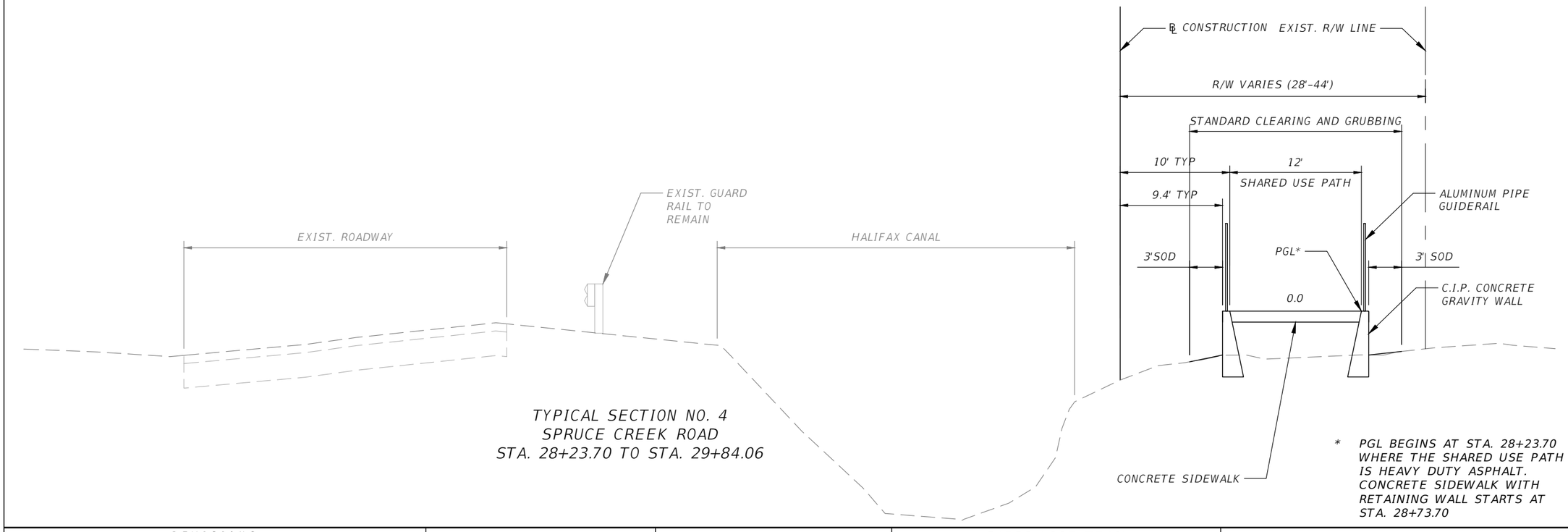

TYPICAL SECTION NO. 4
SPRUCE CREEK ROAD
STA. 28+23.70 TO STA. 29+84.06

* PGL BEGINS AT STA. 28+23.70 WHERE THE SHARED USE PATH IS HEAVY DUTY ASPHALT. CONCRETE SIDEWALK WITH RETAINING WALL STARTS AT STA. 28+73.70

THE OFFICIAL RECORD OF THIS SHEET IS THE ELECTRONIC FILE DIGITALLY SIGNED AND SEALED UNDER RULE 61G15-23.004, F.A.C.

REVISIONS	
DATE	DESCRIPTION

CITY OF PORT ORANGE
1000 CITY CENTER CIRCLE
PORT ORANGE, FL 32129

MERLYNN O. ANDERSON, P.E.
P.E. LICENSE NUMBER 83096

STANLEY CONSULTANTS, INC.
80 SPRING VISTA DRIVE
DEBARY, FL 32713

SJR2C LOOP TRAIL
FROM SOUTH OF SELIN CIR TO HERBERT ST

ROAD	COUNTY	FINANCIAL PROJECT ID
SPRUCE CREEK RD	VOLUSIA	439865-3-54-01

TYPICAL SECTION

SHEET NO. 09

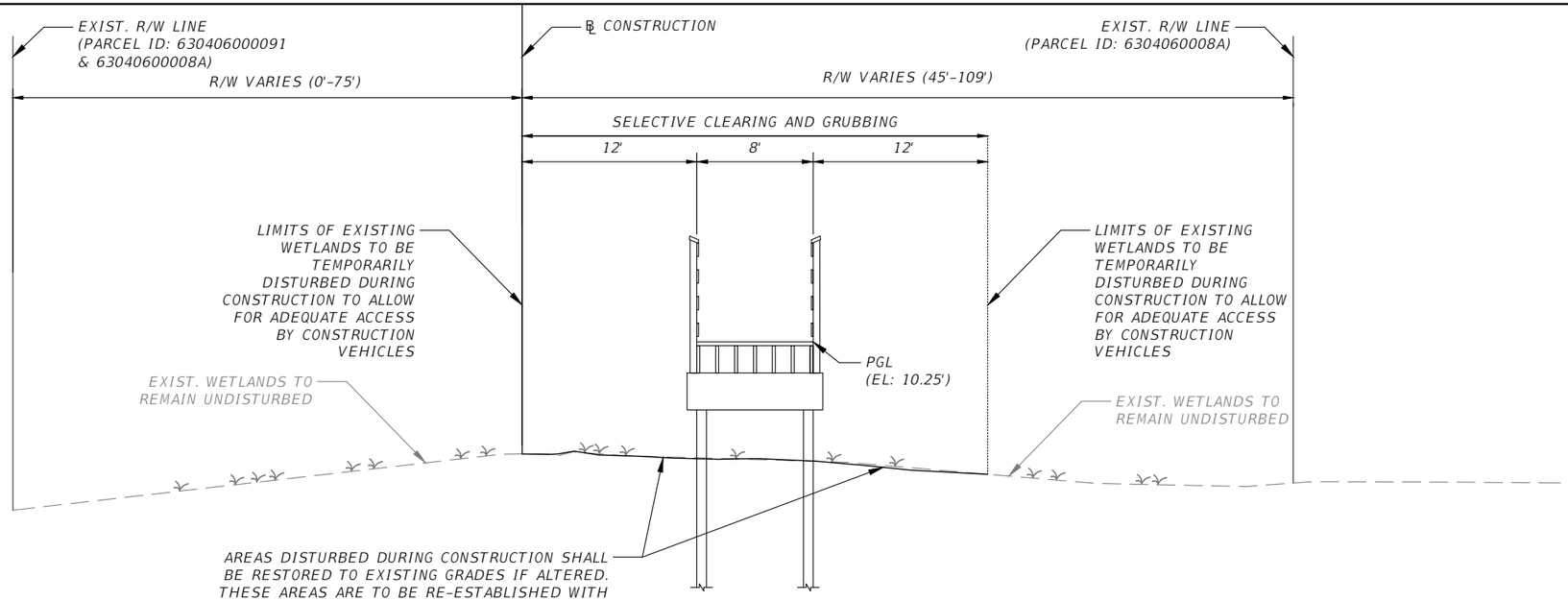

TYPICAL SECTION NO. 5
SPRUCE CREEK ROAD
STA. 29+84.06 TO STA. 36+79.20

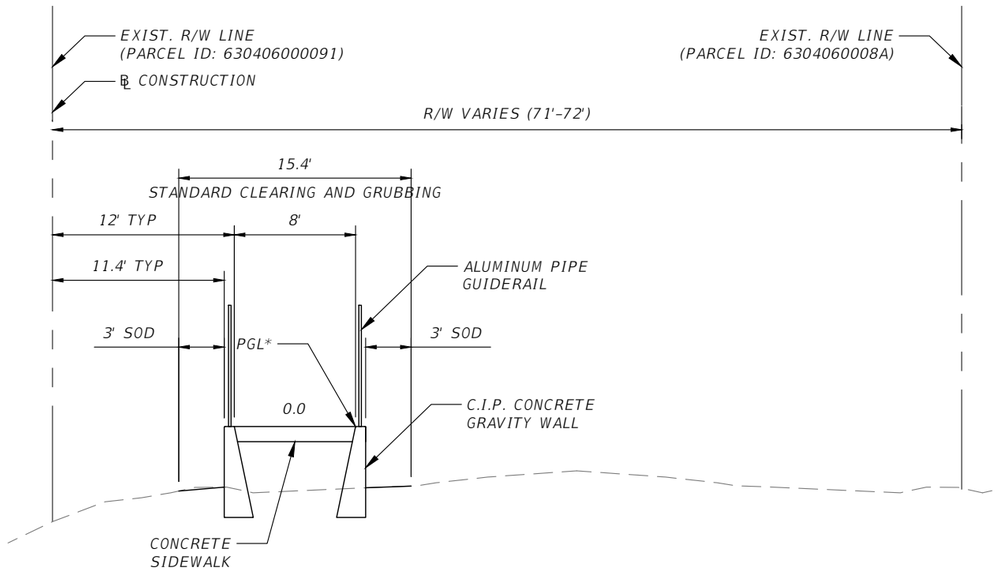

* SEE ROADWAY PLAN AND PROFILE SHEETS FOR ELEVATIONS

TYPICAL SECTION NO. 6
SPRUCE CREEK ROAD
STA. 36+79.20 TO STA. 36+93.79

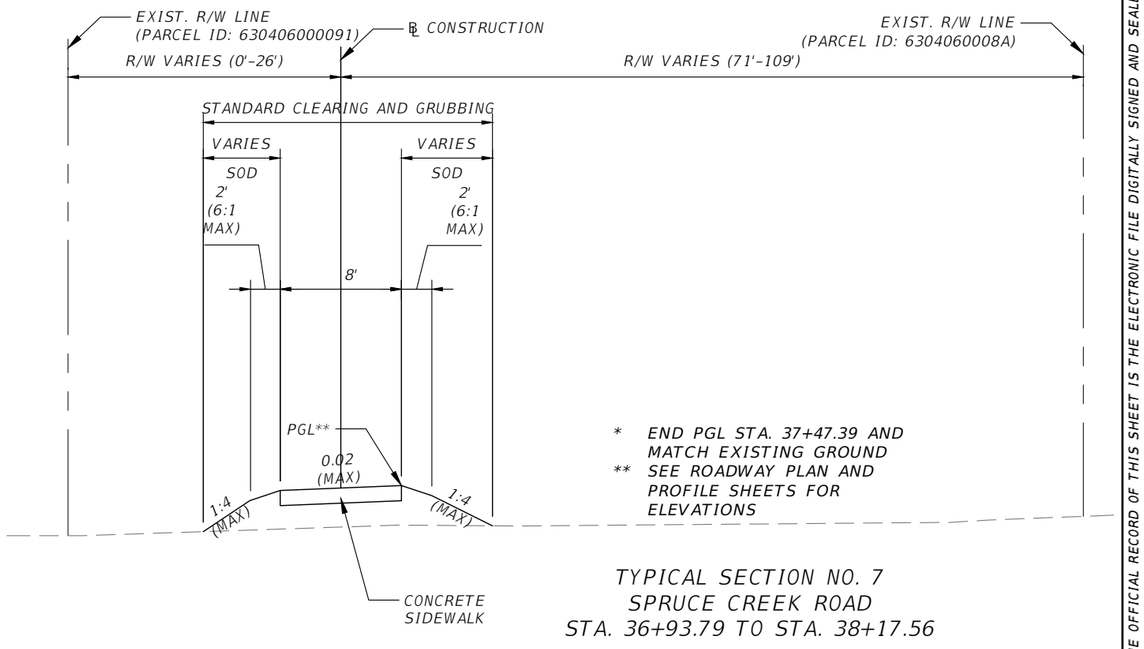

* END PGL STA. 37+47.39 AND MATCH EXISTING GROUND
** SEE ROADWAY PLAN AND PROFILE SHEETS FOR ELEVATIONS

TYPICAL SECTION NO. 7
SPRUCE CREEK ROAD
STA. 36+93.79 TO STA. 38+17.56

THE OFFICIAL RECORD OF THIS SHEET IS THE ELECTRONIC FILE DIGITALLY SIGNED AND SEALED UNDER RULE 61G15-23.004, F.A.C.

REVISIONS	
DATE	DESCRIPTION

CITY OF PORT ORANGE
1000 CITY CENTER CIRCLE
PORT ORANGE, FL 32129

MERLYNN O. ANDERSON, P.E.
P.E. LICENSE NUMBER 83096
STANLEY CONSULTANTS, INC.
80 SPRING VISTA DRIVE
DEBARY, FL 32713

SJR2C LOOP TRAIL
FROM SOUTH OF SELIN CIR TO HERBERT ST

ROAD	COUNTY	FINANCIAL PROJECT ID
SPRUCE CREEK RD	VOLUSIA	439865-3-54-01

TYPICAL SECTION

SHEET NO. 10

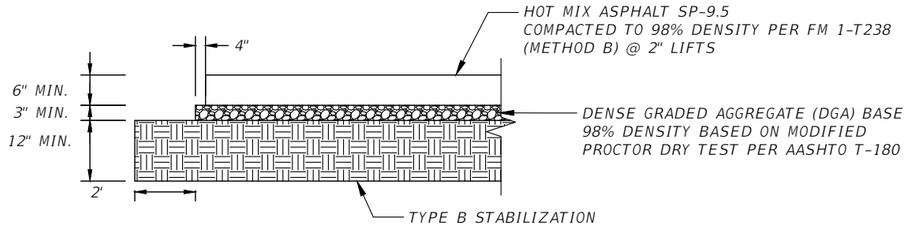

HEAVY DUTY ASPHALT SHARED USE PATH CONSTRUCTION DETAIL

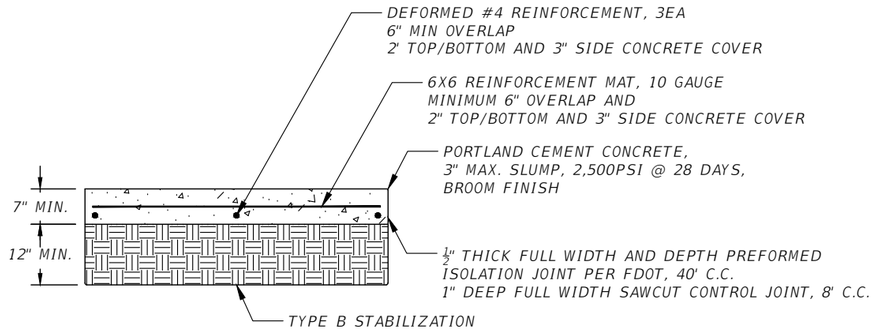

HEAVY DUTY CONCRETE SHARED USE PATH CONSTRUCTION DETAIL

THE OFFICIAL RECORD OF THIS SHEET IS THE ELECTRONIC FILE DIGITALLY SIGNED AND SEALED UNDER RULE 61G15-23.004, F.A.C.

REVISIONS	
DATE	DESCRIPTION

CITY OF PORT ORANGE
1000 CITY CENTER CIRCLE
PORT ORANGE, FL 32129

MERLYNN O. ANDERSON, P.E.
P.E. LICENSE NUMBER 83096

STANLEY CONSULTANTS, INC.
80 SPRING VISTA DRIVE
DEBARY, FL 32713

SJR2C LOOP TRAIL
FROM SOUTH OF SELIN CIR TO HERBERT ST

ROAD	COUNTY	FINANCIAL PROJECT ID
SPRUCE CREEK RD	VOLUSIA	439865-3-54-01

TYPICAL SECTION DETAILS

SHEET NO. 11

LEGEND

PLAN SYMBOLS

- CONCRETE REMOVAL
- 4" THICK CONCRETE SIDEWALK (PER FDOT INDEX 522-001)
- 6" THICK CONCRETE SIDEWALK/DRIVEWAY (PER FDOT INDEX 522-002)
- HEAVY DUTY CONCRETE SHARED USE PATH (SUP) (SEE DETAIL SHEET 11)

830 SELIN CIR
PARCEL ID: 630901010050
ALT KEY: 3606701
VOGEL BRADFORD W & TRUDI E
(O.R.B. 449, PG. 1274)

CURVE DATA ℄ CONSTRUCTION (C1)
PI STA. = 4+37.46
DELTA = 24° 26' 59"
D = 8° 48' 53"
T = 140.83
L = 277.37
R = 650.00
PC STA. = 2+96.63
PT STA. = 5+74.00

N
1" = 40'
0 10 40
Feet

APPARENT R/W
℄ OF CONSTRUCTION
CONST. 8' CONC. SIDEWALK
TREE REMOVAL (TYP.)
2+96.63 23.00 LT.
2+86.00 23.00 LT.
2+86.00 11.53 LT.
FLUSH LEVEL LANDING
DETECTABLE WARNINGS (TYP.)
BEGIN PROJECT STA. 2+75.77
SPRUCE CREEK ROAD
N 12° 10' 41" W
W. LINE O.R.B. 3808, PG. 3483
PC STA. 2+96.63
SELIN CIRCLE (DIRT ROAD)
3+65.23 35.61 LT.
3+58.74 23.00 LT.
3+41.99 12.00 LT.
C1
R 627'
R 20'
R 638'
4+49.09 46.09 LT.
MATCH EXIST.
3+83.17 35.33 LT.
3+87.48 23.11 LT.
APPARENT R/W
8' CONC. SIDEWALK
4+39.73 37.58 LT.
4+00.09 22.82 LT.
R48.0'
4+04.32 12.00 LT.
SAWCUT EXIST. ASPHALT AND CONST. CONC. DRIVEWAY
MATCHLINE STA. - 4+80.00
2+86.10 45.00 RT.
2+85.06 20.83 RT.
R5.0'
2+88.32 49.89 RT.
2+92.43 54.31 RT.
HALIFAX CANAL
INV. EL. -2.32'
INV. EL. -2.30'
5'x8' CONCRETE CULVERT
CR-G
R35'
UTILITY AND ACCESS EASEMENT (O.R.B. 5920, PG. 2088)
PRESCRIPTIVE R/W PER VOLUSIA COUNTY (TOP OF BANK)
CONST. TYPE F C&G
8' CONC. SIDEWALK
2+75.77 44.50 RT.
REPLACE EXIST. DETECTABLE WARNINGS
R13.0'
UTILITY VAULT
INV. EL. 0.42'
INV. EL. -2.30'
PRESCRIPTIVE R/W PER VOLUSIA COUNTY (TOP OF BANK)
5" CAPPED PIPE
SANITARY MANHOLE TOP EL. 7.94'
2+78.11 45.00 RT.
2+83.88 56.54 RT.
REPLACE EXIST. DETECTABLE WARNINGS
EXIST. LANDSCAPING TO BE REMOVED/REPLACED/RELOCATED
MATCH EXIST.
2+94.11 60.72 RT.
ZONE AE (EL. 5.0)
ZONE X
INV. EL. 1.46'
Q-413 OAK PL
PARCEL ID: 631019000170
ALT KEY: 3617703
BLEDSOE & COLEMAN GENERAL
(O.R.B. 2658, PG. 1843)
820 OAK ST
PARCEL ID: 630901010080
ALT KEY: 3606736
JENZANO GROUP LLC
(O.R.B. 5763, PG. 1364)

THE OFFICIAL RECORD OF THIS SHEET IS THE ELECTRONIC FILE DIGITALLY SIGNED AND SEALED UNDER RULE 61G15-23.004, F.A.C.

REVISIONS	
DATE	DESCRIPTION

CITY OF PORT ORANGE
1000 CITY CENTER CIRCLE
PORT ORANGE, FL 32129

MERLYNN O. ANDERSON, P.E.
P.E. LICENSE NUMBER 83096

STANLEY CONSULTANTS, INC.
80 SPRING VISTA DRIVE
DEBARY, FL 32713

SJR2C LOOP TRAIL
FROM SOUTH OF SELIN CIR TO HERBERT ST

ROAD	COUNTY	FINANCIAL PROJECT ID
SPRUCE CREEK RD	VOLUSIA	439865-3-54-01

ROADWAY PLAN

SHEET NO. 12

O'Neill, Karen 5/14/2025 12:31:44 PM Z:\2016 Projects\10962 (Port Orange)\TWO 09 - SUNTrail (SJR2C Loop) Spruce Creek Rd\CAD\439865\Roadway\PLANRD01.dwg

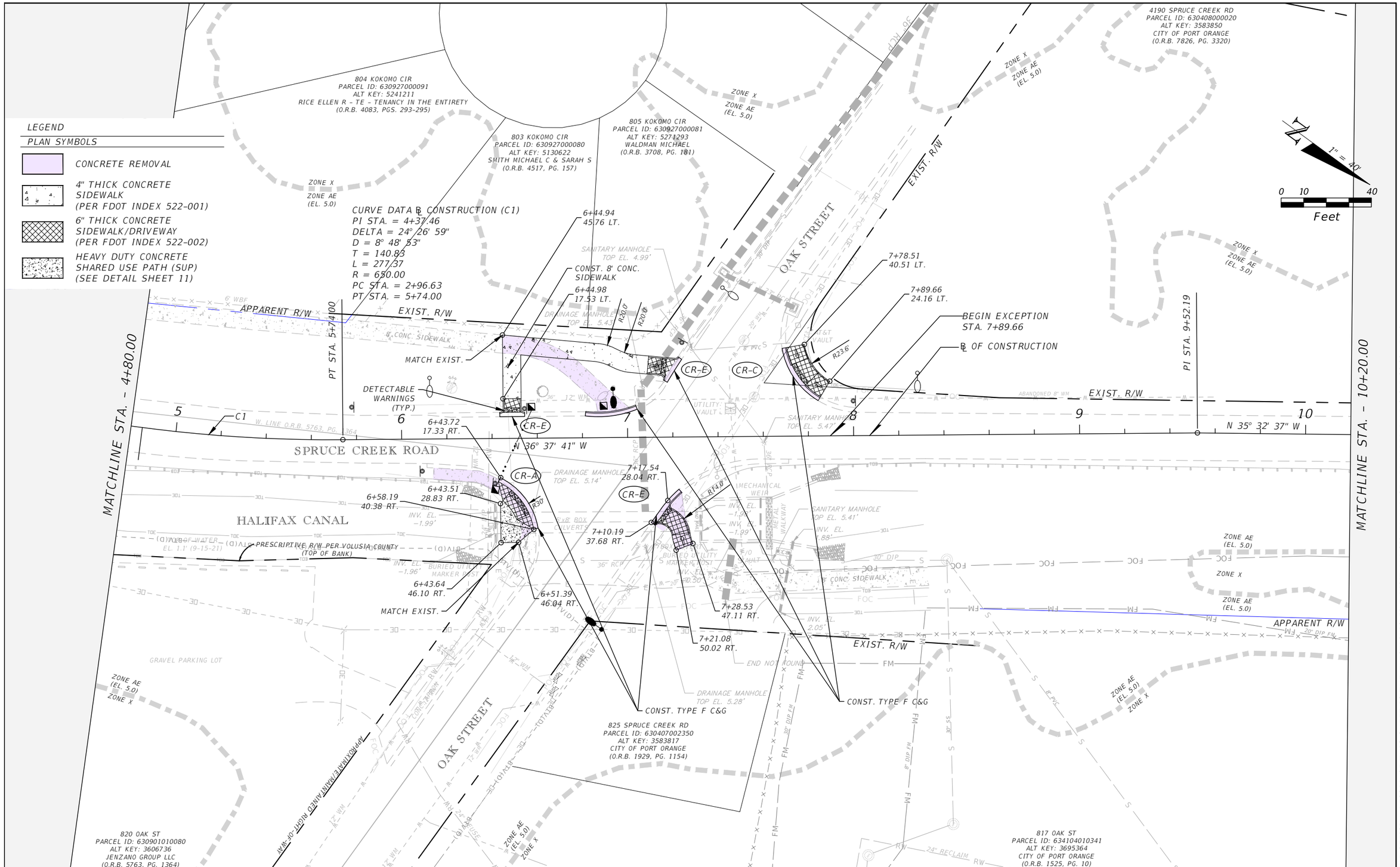

THE OFFICIAL RECORD OF THIS SHEET IS THE ELECTRONIC FILE DIGITALLY SIGNED AND SEALED UNDER RULE 61G15-23.004, F.A.C.

REVISIONS	
DATE	DESCRIPTION

CITY OF PORT ORANGE
1000 CITY CENTER CIRCLE
PORT ORANGE, FL 32129

MERLYNN O. ANDERSON, P.E.
P.E. LICENSE NUMBER 83096

STANLEY CONSULTANTS, INC.
80 SPRING VISTA DRIVE
DEBARY, FL 32713

SJR2C LOOP TRAIL
FROM SOUTH OF SELIN CIR TO HERBERT ST

ROAD	COUNTY	FINANCIAL PROJECT ID
SPRUCE CREEK RD	VOLUSIA	439865-3-54-01

ROADWAY PLAN

SHEET NO.
13

O'Neill, Karen 5/14/2025 12:31:50 PM Z:\2016 Projects\10962 (Port Orange)\TWO 09 - SUNTrail (SJR2C Loop) Spruce Creek Rd\CAD\439865\Roadway\PLANRD01.dwg

LEGEND

PLAN SYMBOLS

- CONCRETE REMOVAL
- 4" THICK CONCRETE SIDEWALK (PER FDOT INDEX 522-001)
- 6" THICK CONCRETE SIDEWALK/DRIVEWAY (PER FDOT INDEX 522-002)
- HEAVY DUTY ASPHALT SHARED USE PATH (SUP) (SEE DETAIL SHEET 11)

PARCEL ID: 633701280012
ALT KEY: 6334447
CITY OF PORT ORANGE
(O.R.B. 5399, PGS. 1067-1077)

725 DUNLAWTON AVE
PARCEL ID: 633701280010
ALT KEY: 3679873
UNITED STATES POSTAL SERVICE
(O.R.B. 2555, PG. 1998)

CURVE DATA ℄ CONSTRUCTION (C2)
PI STA. = 21+10.92
DELTA = 10° 42' 28"
D = 5° 43' 46"
T = 93.72
L = 186.89
R = 1000.00
PC STA. = 20+17.20
PT STA. = 22+04.09

1" = 40'
0 10 40
Feet

DUNLAWTON AVENUE (CR 421)

SAMMS AVENUE

SPRUCE CREEK ROAD

MATCHLINE STA. - 17+20.00

MATCHLINE STA. - 22+60.00

SPRUCE CREEK RD
PARCEL ID: 630408000120
ALT KEY: 3583957
STATE OF FLORIDA DOT
(O.R.B. 1799, PG. 613)

SPRUCE CREEK RD
PARCEL ID: 630407001820
ALT KEY: 4261231
CITY OF PORT ORANGE
(O.R.B. 5236, PG. 1068)

638 POWERS AVE
PARCEL ID: 630407001690
ALT KEY: 3583761
FLORIDA POWER & LIGHT COMPANY
(M.B. 10, PG. 138)

℄ OF CONSTRUCTION
APPARENT R/W
EXIST. R/W
EXIST. VEGETATION TO REMAIN
END EXCEPTION STA. 19+78.21
PI STA. 18+57.99
PI STA. 19+83.22
PC STA. 20+17.20
PT STA. 22+04.09
N 35° 32' 37" W
N 35° 59' 50" W
N 35° 21' 02" W
N 24° 38' 34" W
18
19
20
21
22
C2
CR-E
CR-G
19+84.95 26.16 RT.
19+91.49 38.93 RT. DETECTABLE WARNINGS (TYP.)
CONST. TYPE F C&G
19+78.21 52.71 RT.
19+89.74 40.79 RT.
19+93.04 53.35 RT.
19+99.30 40.50 RT.
19+95.89 67.65 RT.
MATCH EXIST.
19+97.79 77.02 RT.
R5.0'
R2.0'
20+05.79 61.50 RT.
20+01.32 73.53 RT.
CONST. CONCRETE SIDEWALK
19+94.79 31.44 RT.
19+87.29 29.93 RT.
ALUMINUM PIPE GUIDERAIL WITH THICKENED EDGE SIDEWALK
R4.0'
R13.0'
20+03.74 44.41 RT.
20+15.59 43.57 RT.
20+17.90 52.49 RT.
R5.0'
20+22.58 56.35 RT.
20+26.94 56.71 RT.
20+44.08 59.23 RT.
R30.0'
R20.0'
20+21.44 68.31 RT.
20+17.14 67.94 RT.
20+07.07 59.18 RT.
R2.0'
21+87.43 60.00 RT.
21+65.55 61.86 RT.
R40.0'
R102.0'
S-102
STA 20+96.68 (45.17 Rt.)
CONST. CD MES (1:2)
INDEX No. 430-021
FL 0.80 (18" X 18")
41LF 18" PIPE @0.50%
S-101
STA 20+85.00 (84.43 Rt.)
CONST. INLET TYPE C
INDEX No. 425-052
TOP EL. 4.00
FL 1.00 (18" X 18")
CONST. 12' HEAVY DUTY ASPHALT SUP
DRAINAGE MANHOLE TOP EL. 5.79'
DRAINAGE MANHOLE TOP EL. 5.64'
DRAINAGE MANHOLE TOP EL. 5.55'
DRAINAGE MANHOLE TOP EL. 5.78'
DRAINAGE MANHOLE TOP EL. 5.14' INV. EL. 2.18'
DRAINAGE MANHOLE TOP EL. 4.60' INV. EL. 1.81'
DRAINAGE MANHOLE TOP EL. 5.53'
CATCH BASIN TOP EL. 4.88'
CATCH BASIN TOP EL. 4.95'
CATCH BASIN TOP EL. 5.70'
INV. EL. -1.75
INV. EL. -1.59'
PEDESTRIAN CROSSING SIGNAL
FIBER OPTIC VAULT
FIBER OPTIC MARKER POST
BURIED GAS LINE MARKER POST
6" STEEL GAS MAIN
8" PVC REUSE
5'x8' BOX CULVERT
8' CONC. SIDEWALK
5' CONC. SIDEWALK
ZONE X
ZONE AE (EL. 6.0)
ZONE AE (EL. 5.0)
18" RCP
15" RCP
24" RCP
12" CIP FM

THE OFFICIAL RECORD OF THIS SHEET IS THE ELECTRONIC FILE DIGITALLY SIGNED AND SEALED UNDER RULE 61G15-23.004, F.A.C.

REVISIONS	
DATE	DESCRIPTION

CITY OF PORT ORANGE
1000 CITY CENTER CIRCLE
PORT ORANGE, FL 32129

MERLYNN O. ANDERSON, P.E.
P.E. LICENSE NUMBER 83096

STANLEY CONSULTANTS, INC.
80 SPRING VISTA DRIVE
DEBARY, FL 32713

SJR2C LOOP TRAIL
FROM SOUTH OF SELIN CIR TO HERBERT ST

ROAD	COUNTY	FINANCIAL PROJECT ID
SPRUCE CREEK RD	VOLUSIA	439865-3-54-01

ROADWAY PLAN

SHEET NO. 14

LEGEND

PLAN SYMBOLS

HEAVY DUTY ASPHALT SHARED USE PATH (SUP) (SEE DETAIL SHEET 11)

703 SAMMS AVE
PARCEL ID: 633701210021
ALT KEY: 3679024
PORT ORANGE INDUSTRIAL LLC
(O.R.B. 3334, PG. 1289)

SPRUCE CREEK RD
PARCEL ID: 633701210022
ALT KEY: 3679032
ATTN PROPERTY TAX DEPT

3000 SPRUCE CREEK RD
PARCEL ID: 633701210020
ALT KEY: 3679016
FLORIDA POWER & LIGHT COMPANY
(O.R.B. 2277, PG. 119)

1" = 40'

0 10 40

Feet

MATCHLINE STA. - 22+60.00

MATCHLINE STA. - 28+20.00

S-104
STA 23+60.04 (48.42 Rt.)
CONST. CD MES (1:2)
INDEX No. 430-021
(WITH INLINE CHECK VALVE)
FL 0.83 (18")

FILL EXISTING SWALES AND SOD ALL DISTURBED AREAS

REMOVE 50 LF OF EXIST. PIPE AND END TREATMENTS

S-106
STA 24+92.92 (49.05 Rt.)
CONST. CD MES (1:2)
INDEX No. 430-021
FL 2.00 (18")

℄ OF CONSTRUCTION

PI STA. 24+57.87

PI STA. 27+20.00

APPARENT R/W

ZONE X

ZONE AE (EL. 6.0)

INV. EL. 2.54'

CATCH BASIN TOP EL. 5.03 INV. EL.

SANITARY MANHOLE TOP EL. 5.46' INV. EL.

CATCH BASIN TOP EL. 5.34' INV. EL. 3.07'

INV. EL. 2.75'

6" STEEL GAS MAIN

12" RCP

8" CMP

8" BFP

8" RCP

23

24

25

26

27

28

N 24° 38' 34" W

N 23° 04' 01" W

N 66° 55' 59" E

SPRUCE CREEK ROAD

FILL EXISTING SWALE AND SOD ALL DISTURBED AREAS

43 LF 18" PIPE @0.50%

INV. EL. 2.01'

24+26.92
56.50 RT.

INV. EL. -1.40'

24+47.06
59.79 RT.

24+49.56
60.91 RT.

24+43.89
70.96 RT.

24+72.04
69.72 RT.

25+52.96
68.49 RT.

26+00.00
57.00 RT.

23+09.16
65.89 RT.

23+27.84
66.04 RT.

24+28.33
67.92 RT.

R940.0'

R90.0'

R48.0'

R102.0'

R90.0'

CATCH BASIN TOP EL. 5.56' INV. EL. -1.48'

INV. EL. 1.57'

4" DUCT (MAYBE FIBER OPTIC)

BURIED GAS LINE MARKER POST

4.32 4.30 4.29 4.59 4.74 4.44 4.89 5.04 5.19 5.34 5.50 5.64 5.71 4.10 4.01 4.36 4.39 3.85 3.73 3.64 3.61 3.46 3.43 3.43 3.72

RIGHTED FIBER OPTIC LINE MARKER POST

DRIVEWAY

EXIST. R/W

CONST. 12' HEAVY DUTY ASPHALT SUP

S-103
STA 23+60.04 (91.08 Rt.)
CONST. INLET TYPE C
INDEX No. 425-052
TOP EL. 3.43
FL 0.62 (18")

UNK INV

UNK INV

INV. EL. 2.71'

SANITARY MANHOLE TOP EL. 5.41' INV. EL.

EXISTING GUY WIRES TO BE RELOCATED BY FPL

16 LF OF ALUMINUM PIPE GUIDERAIL ON THICKENED EDGE SIDEWALK

CONST. 12' HEAVY DUTY ASPHALT SUP

REMOVE EXISTING VEGETATION

REMOVE EXIST. GRAVEL DRIVEWAY WITHIN R/W AND REPLACE WITH SOD

47 LF 18" PIPE @1.50%

DETECTABLE WARNING (TYP.)

S-105
STA 24+69.98 (90.14 Rt.)
CONST. SD MES (1:4)
INDEX No. 430-022
FL 2.71 (18")

TBM 1383
EL. 5.215'
SET IRC
TRAV PT LB 7808

POWERS AVENUE

638 POWERS AVE
PARCEL ID: 630407001690
ALT KEY: 3583761
FLORIDA POWER & LIGHT COMPANY
(M.B. 10, PG. 138)

REMOVE 20 LF OF EXIST. CMP SIDE DRAIN

639 POWERS AVE
PARCEL ID: 630407001670
ALT KEY: 3583752
GRUBBS FREDA L TR
(O.R.B. 5743, PG. 1494)

THE OFFICIAL RECORD OF THIS SHEET IS THE ELECTRONIC FILE DIGITALLY SIGNED AND SEALED UNDER RULE 61G15-23.004, F.A.C.

REVISIONS	
DATE	DESCRIPTION

CITY OF PORT ORANGE
1000 CITY CENTER CIRCLE
PORT ORANGE, FL 32129

MERLYNN O. ANDERSON, P.E.
P.E. LICENSE NUMBER 83096

STANLEY CONSULTANTS, INC.
80 SPRING VISTA DRIVE
DEBARY, FL 32713

SJR2C LOOP TRAIL
FROM SOUTH OF SELIN CIR TO HERBERT ST

ROAD	COUNTY	FINANCIAL PROJECT ID
SPRUCE CREEK RD	VOLUSIA	439865-3-54-01

ROADWAY PLAN

SHEET NO. 15

O'Neill, Karen 5/14/2025 12:32:01 PM Z:\2016 Projects\10962 (Port Orange)\TWO 09 - SUNTrail (SJR2C Loop) Spruce Creek Rd\CAD\439865\Roadway\PLANRD01.dwg

CURVE DATA ℄ CONSTRUCTION (C3)
PI STA. = 29+04.34
DELTA = 19° 21' 50"
D = 58° 27' 54"
T = 16.72
L = 33.12
R = 98.00
PC STA. = 28+87.62
PT STA. = 29+20.74

CURVE DATA ℄ CONSTRUCTION (C4)
PI STA. = 30+64.97
DELTA = 20° 00' 00"
D = 46° 12' 23"
T = 21.86
L = 43.28
R = 124.00
PC STA. = 30+43.11
PT STA. = 30+86.39

CURVE DATA ℄ CONSTRUCTION (C5)
PI STA. = 32+18.08
DELTA = 20° 00' 00"
D = 46° 12' 23"
T = 21.86
L = 43.28
R = 124.00
PC STA. = 31+96.21
PT STA. = 32+39.50

℄ CONSTRUCTION
EXIST. 0.75" GAS SERVICE LINE (APPROX. DEPTH 21")
CANAL VIEW BLVD.
APPARENT R/W
EXIST. R/W
CONST. 12' SIDEWALK
CONST. 12' HEAVY DUTY ASPHALT SUP
SPRUCE CREEK ROAD
ZONE AE (EL. 6.0)
ZONE X
PI STA. 27+20.00
PI STA. 27+67.00
PC STA. 28+87.62
PT STA. 29+20.74
PC STA. 30+43.11
PT STA. 30+86.39
PC STA. 31+96.21
PT STA. 32+39.50
28+87.62 10.00 RT.
28+73.70 10.00 RT.
28+33.70 10.00 RT.
29+20.74 10.00 RT.
29+75.37 9.67 RT.
BEGIN BOARDWALK STA. 29+84.06
29+63.40 10.00 RT.
N 22° 25' 51" W
N 42° 25' 51" W
N 02° 25' 51" W
C3
C4
C5
R108'
28
29
30
31
32
33
BENT No. 1 STA. 29+84.89
BENT No. 7 STA. 30+43.11
BENT No. 11 STA. 30+86.39
BENT No. 14 STA. 31+16.39
BENT No. 20 STA. 31+76.39
BENT No. 22 STA. 31+96.21
BENT No. 26 STA. 32+39.50
BENT No. 27 STA. 32+48.37
BENT No. 34 STA. 33+18.37
TREE REMOVAL (TYP.)
662 HERBERT ST
PARCEL ID: 630406000090
ALT KEY: 3583337
MEADOWS ELLIOT
(O.R.B. 7367, PG. 4881)
HERBERT ST
PARCEL ID: 63040600008A
ALT KEY: 5080030
CITY OF PORT ORANGE
(O.R.B. 3221, PG. 1200)
MATCHLINE STA. - 33+20.00
1" = 40'
END RAILING 29+84.06 12.00 RT.
END RAILING 29+84.06 20.00 RT.
29+75.37 22.33 RT.
CONST. GRAVITY WALL A, SCHEME 1, WITH ALUMINUM PIPE GUIDERAIL
ADJUST MANHOLE TO FINISHED GRADE
S-108
STA 28+92.24 (-2.98 Lt.)
CONST. CD MES (1:2)
INDEX No. 430-021
FL 0.36 (24")
S-107
STA 28+95.94 (25.25 Rt.)
CONST. INLET TYPE C
INDEX No. 425-052
FL 0.36 (24")
REMOVE 27 LF OF EXSIT. PIPE AND CONST. 29LF 24" PIPE @0.00%
40' CROSS SLOPE TRANSITION (2.0% to 0.0%)
-2.00%
0.00%
25' UPLAND BUFFER
TBM 1383
EL. 5.215'
SET IRC
TRAV PT LB 7808
A1
A2
A3
A4
A5
A6
A7
A8
B1-1
B1-2
BURIED GAS LINE MARKER POST
DRAINAGE MANHOLE TOP EL. 6.50'
GAS LINE 6" STEEL GAS MAIN
0.75" STEEL GAS SERVICE LINE

LEGEND

PLAN SYMBOLS

4" THICK CONCRETE SIDEWALK (PER FDOT INDEX 522-001)

HEAVY DUTY ASPHALT SHARED USE PATH (SUP) (SEE DETAIL SHEET 11)

8' WIDE BOARDWALK (SEE DETAIL SHEET B1-02)

K = 4
20' V.C.
+37.05 EL. 4.95
VPI + 47.05 EL. 4.85
+57.05 EL. 5.24
STA. +29+84.06
Elev. = 10.25
BEGIN BOARDWALK
STA. 29+84.06
ELEV. 10.25
0.00%
3.94%
-1.00%
S-107
PGL
EXISTING GRADE AT PGL
EXIST. 0.75" GAS (APPROX. DEPTH 21")
BEGIN PROFILE GRADE
STA. 28+23.70
ELEV. 5.08
EXIST. 10" WATER (APPROX. DEPTH 36")
EXIST. 10" WATER (APPROX. DEPTH 36")
EXIST. 6" GAS (APPROX. DEPTH 30")
CONTRACTOR TO NOTIFY TECO GAS PRIOR TO ANY WORK NEAR EXISTING GAS MAINS AND SERVICE LINES
CONTRACTOR TO NOTIFY CITY OF PORT ORANGE PRIOR TO ANY WORK NEAR EXISTING WATER MAINS
20
10
0
-10
28+00
29+00
30+00
31+00
32+00
33+00
1" = 40' Horizontal
1" = 8' Vertical

THE OFFICIAL RECORD OF THIS SHEET IS THE ELECTRONIC FILE DIGITALLY SIGNED AND SEALED UNDER RULE 61G15-23.004, F.A.C.

REVISIONS	
DATE	DESCRIPTION

CITY OF PORT ORANGE
1000 CITY CENTER CIRCLE
PORT ORANGE, FL 32129

MERLYNN O. ANDERSON, P.E.
P.E. LICENSE NUMBER 83096
STANLEY CONSULTANTS, INC.
80 SPRING VISTA DRIVE
DEBARY, FL 32713

SJR2C LOOP TRAIL
FROM SOUTH OF SELIN CIR TO HERBERT ST

ROAD	COUNTY	FINANCIAL PROJECT ID
SPRUCE CREEK RD	VOLUSIA	439865-3-54-01

ROADWAY PLAN AND PROFILE

SHEET NO. 16

LEGEND

PLAN SYMBOLS

- CONCRETE REMOVAL
- 4" THICK CONCRETE SIDEWALK (PER FDOT INDEX 522-001)
- 6" THICK CONCRETE SIDEWALK/DRIVEWAY (PER FDOT INDEX 522-002)
- 8' WIDE BOARDWALK (SEE DETAIL SHEET B1-02)

MATCHLINE STA. - 33+20.00

℄ CONSTRUCTION

BENT No. 41
STA. 33+88.37

TREE REMOVAL (TYP.)

BENT No. 48
STA. 34+58.37

BENT No. 55
STA. 35+28.37

BENT No. 62
STA. 35+98.37

BENT No. 70
STA. 36+78.37

BENT No. 69
STA. 36+68.37

6TH ST
PARCEL ID: 630406000091
ALT KEY: 5578518
CITY OF PORT ORANGE
(O.R.B. 4060, PGS. 2312-2313)

END BOARDWALK
STA. 36+79.20

CONST. GRAVITY WALL B, SCHEME 1, WITH ALUMINUM PIPE HANDRAIL

36+97.66
12.00 RT.

36+93.79
12.00 RT.

ZONE AE (EL 6.0)

ZONE X

1" = 40'

APPARENT R/W

37+61.75
18.67 LT.

DETECTABLE WARNINGS (TYP.)

CONST. 8' SIDEWALK

37+42.36
11.29 LT.

SANITARY MANHOLE
TOP EL. 8.70'

R 33'

R 45'

EXIST. R/W

HERBERT STREET

655 HERBE
PARCEL ID: 630
ALT KEY: 4
GN & TN
(O.R.B. 6611,

37+86.46
16.73 LT.

653 HERBE
PARCEL ID: 630
ALT KEY: 47
GN & TN
(O.R.B. 6913, P

REMOVE EXIST. CONC.

CONST. 8' SIDEWALK

38+17.56
15.02 LT.

8' CONC. SIDEWALK

5.00%

-4.13%

2.00%

37+25.97
1.98 RT.

REMOVE 8 LF EXIST. FENCE WITHIN EXIST. R/W

6TH STREET

END PROJECT
STA. 38+17.56

34

35

36

37

TB-3

TB-4

HERBERT ST
PARCEL ID: 630406000008A
ALT KEY: 5080030
CITY OF PORT ORANGE
(O.R.B. 3221, PG. 1200)

36+79.87
12.00 RT.

A1

A2

A3

25 UPLAND BUFFER

8' STUCCO WALL

7' CLF

4' CLF

BURIED GAS LINE MARKER POST

626 6TH ST
PARCEL ID: 630402190110
ALT KEY: 3582683
GENSLER BRENDA A
(O.R.B. 7575, PG. 2143)

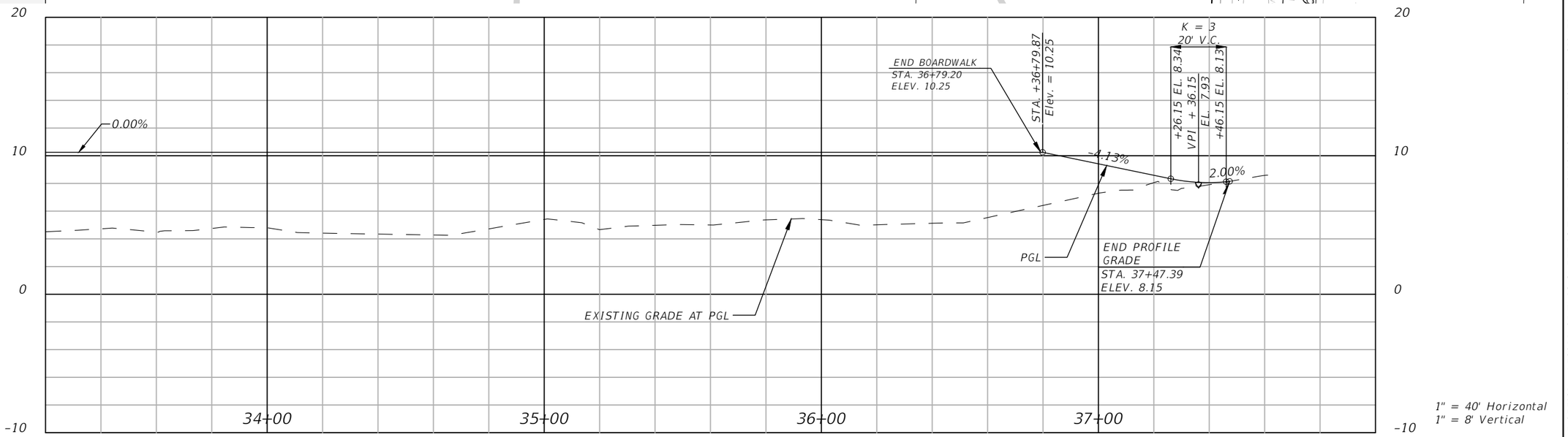

1" = 40' Horizontal
1" = 8' Vertical

THE OFFICIAL RECORD OF THIS SHEET IS THE ELECTRONIC FILE DIGITALLY SIGNED AND SEALED UNDER RULE 61G15-23.004, F.A.C.

REVISIONS	
DATE	DESCRIPTION

CITY OF PORT ORANGE
1000 CITY CENTER CIRCLE
PORT ORANGE, FL 32129

MERLYNN O. ANDERSON, P.E.
P.E. LICENSE NUMBER 83096

STANLEY CONSULTANTS, INC.
80 SPRING VISTA DRIVE
DEBARY, FL 32713

SJR2C LOOP TRAIL
FROM SOUTH OF SELIN CIR TO HERBERT ST

ROAD	COUNTY	FINANCIAL PROJECT ID
SPRUCE CREEK RD	VOLUSIA	439865-3-54-01

ROADWAY PLAN AND PROFILE

SHEET NO. 17

O'Neill, Karen 5/14/2025 12:32:51 PM Z:\2016 Projects\10962 (Port Orange)\TWO 09 - SUNTrail (SJR2C Loop) Spruce Creek Rd\CAD\439865\Roadway\PLPRRD01.dwg

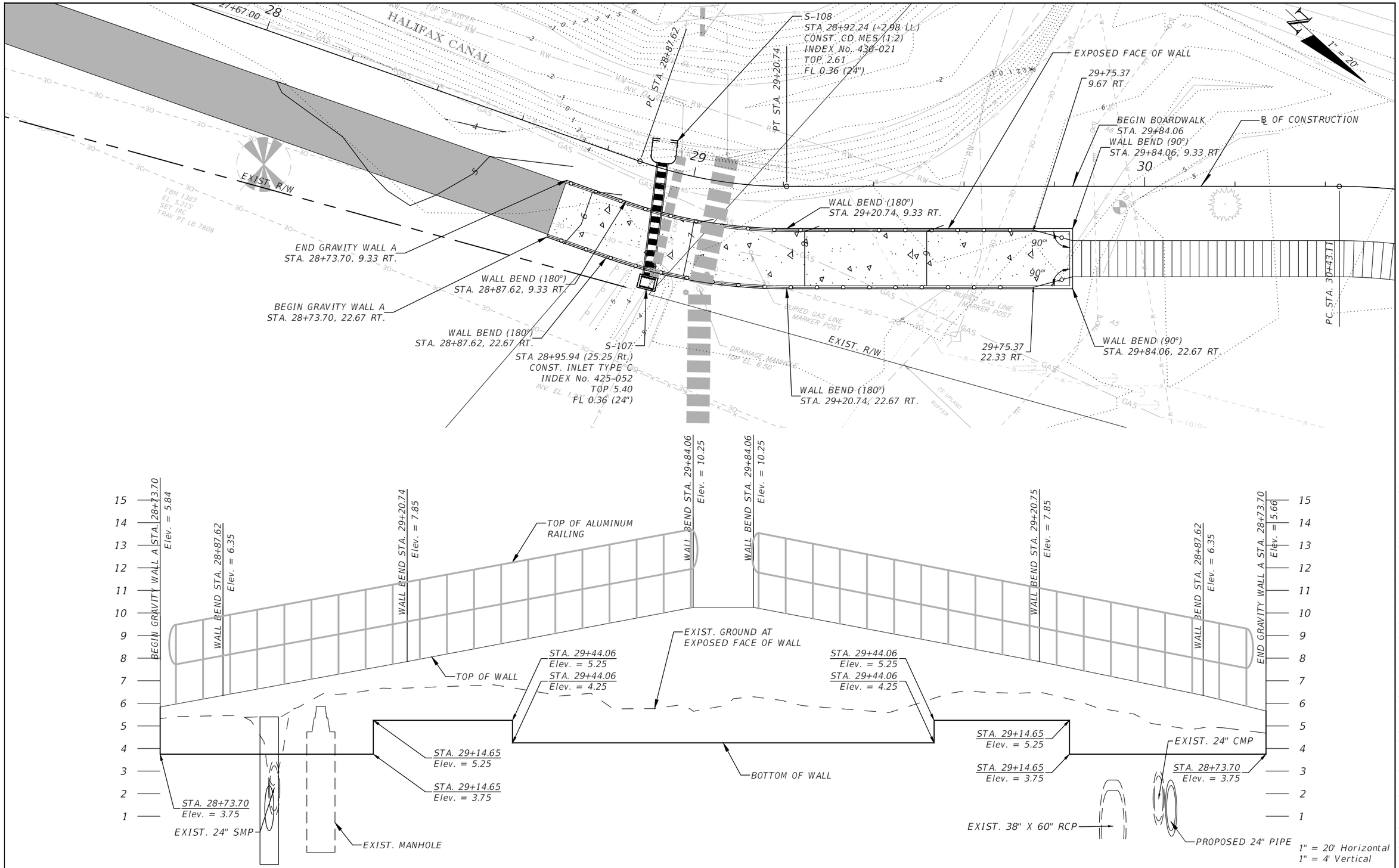

THE OFFICIAL RECORD OF THIS SHEET IS THE ELECTRONIC FILE DIGITALLY SIGNED AND SEALED UNDER RULE 61G15-23.004, F.A.C.

REVISIONS	
DATE	DESCRIPTION

CITY OF PORT ORANGE
1000 CITY CENTER CIRCLE
PORT ORANGE, FL 32129

MERLYNN O. ANDERSON, P.E.
P.E. LICENSE NUMBER 83096

STANLEY CONSULTANTS, INC.
80 SPRING VISTA DRIVE
DEBARY, FL 32713

SJR2C LOOP TRAIL
FROM SOUTH OF SELIN CIR TO HERBERT ST

ROAD	COUNTY	FINANCIAL PROJECT ID
SPRUCE CREEK RD	VOLUSIA	439865-3-54-01

GRAVITY WALL PLAN & PROFILE WALL A

SHEET NO. 18

O'Neill, Karen 5/14/2025 12:33:15 PM Z:\2016 Projects\10962 (Port Orange)\TWO 09 - SUNTrail (SJR2C Loop) Spruce Creek Rd\CAD\439865\Roadway\PLPRRD_WALL01.dwg

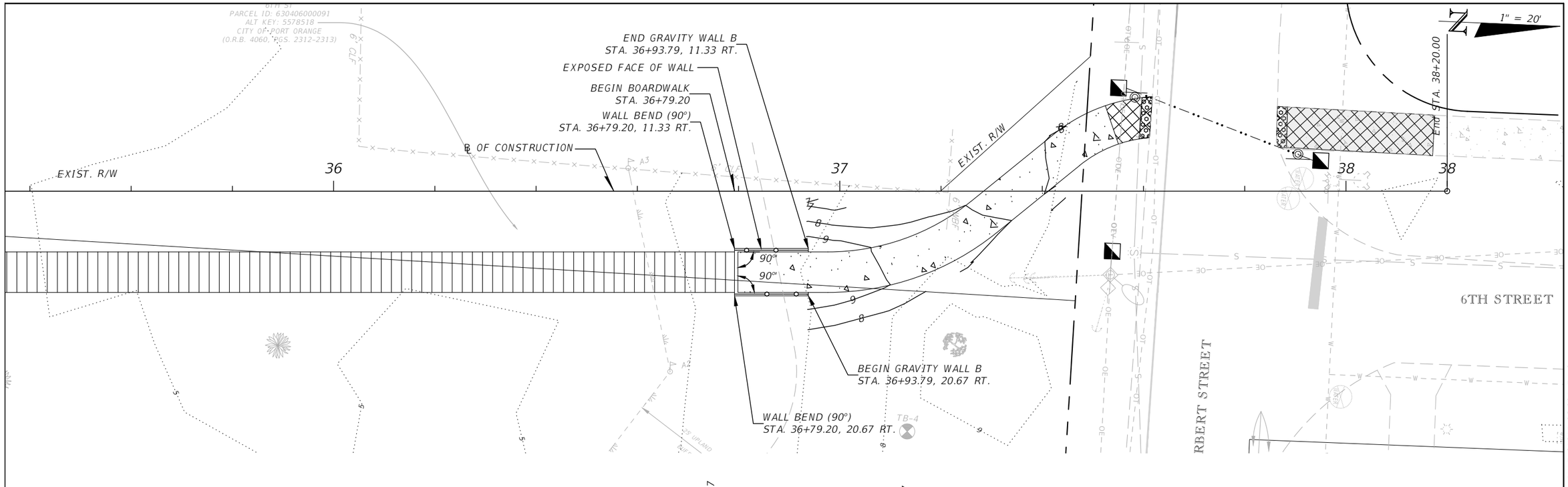

THE OFFICIAL RECORD OF THIS SHEET IS THE ELECTRONIC FILE DIGITALLY SIGNED AND SEALED UNDER RULE 61G15-23.004, F.A.C.

REVISIONS	
DATE	DESCRIPTION

CITY OF PORT ORANGE
1000 CITY CENTER CIRCLE
PORT ORANGE, FL 32129

MERLYNN O. ANDERSON, P.E.
P.E. LICENSE NUMBER 83096

STANLEY CONSULTANTS, INC.
80 SPRING VISTA DRIVE
DEBARY, FL 32713

SJR2C LOOP TRAIL
FROM SOUTH OF SELIN CIR TO HERBERT ST

ROAD	COUNTY	FINANCIAL PROJECT ID
SPRUCE CREEK RD	VOLUSIA	439865-3-54-01

GRAVITY WALL PLAN & PROFILE WALL B

SHEET NO. 19

O'Neill, Karen 5/14/2025 12:33:20 PM Z:\2016 Projects\10962 (Port Orange)\TWO 09 - SUNTrail (SJR2C Loop) Spruce Creek Rd\CAD\439865\Roadway\PLPRRD_WALL01.dwg

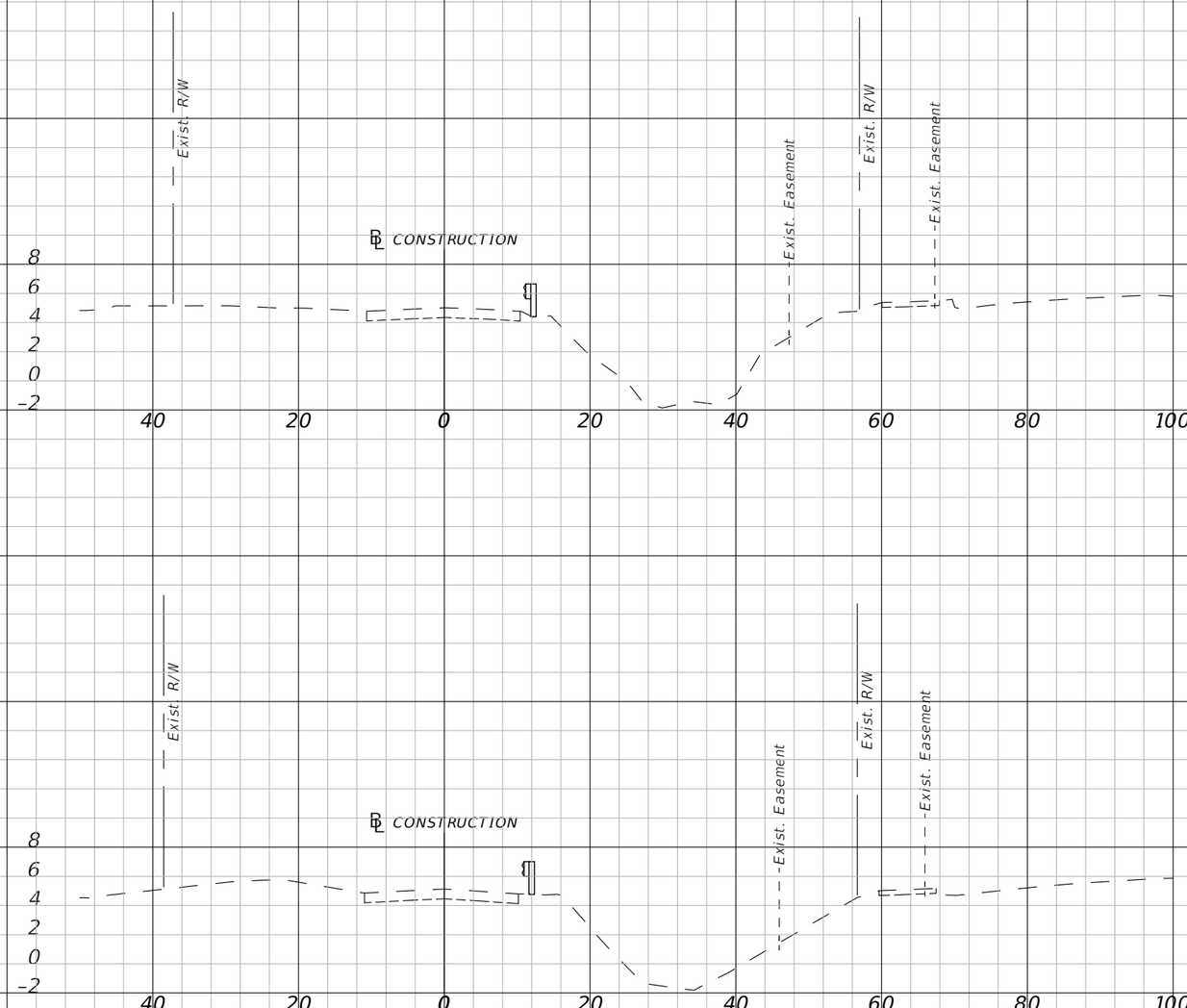

2+00.00

1+50.00

1" = 20' Horizontal
1" = 10' Vertical

THE OFFICIAL RECORD OF THIS SHEET IS THE ELECTRONIC FILE DIGITALLY SIGNED AND SEALED UNDER RULE 61G15-23.004, F.A.C.

REVISIONS	
DATE	DESCRIPTION

CITY OF PORT ORANGE
1000 CITY CENTER CIRCLE
PORT ORANGE, FL 32129

MERLYNN O. ANDERSON, P.E.
P.E. LICENSE NUMBER 83096

STANLEY CONSULTANTS, INC.
80 SPRING VISTA DRIVE
DEBARY, FL 32713

SJR2C LOOP TRAIL
FROM SOUTH OF SELIN CIR TO HERBERT ST

ROAD	COUNTY	FINANCIAL PROJECT ID
SPRUCE CREEK RD	VOLUSIA	439865-3-54-01

CROSS SECTION

SHEET NO. 20

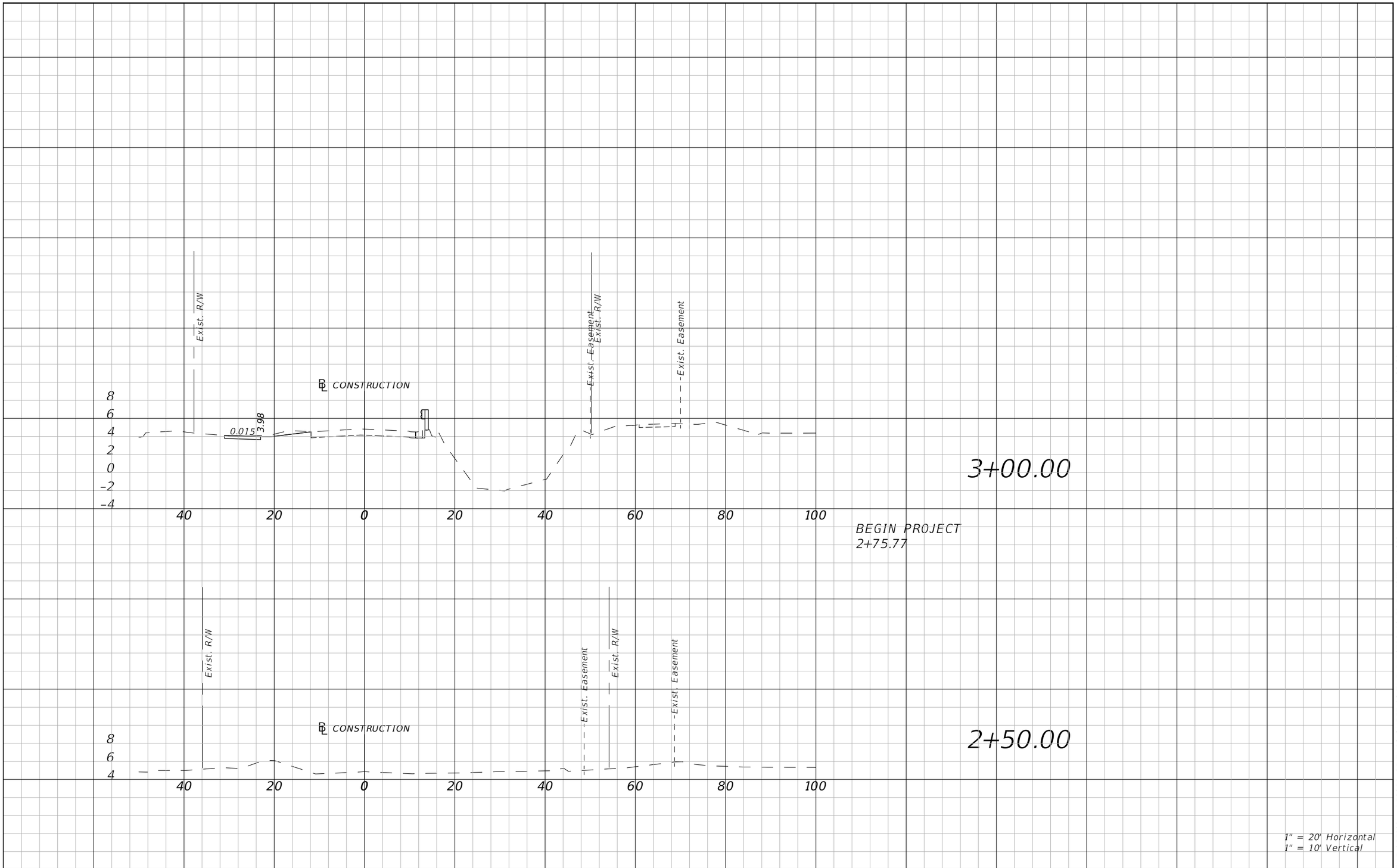

THE OFFICIAL RECORD OF THIS SHEET IS THE ELECTRONIC FILE DIGITALLY SIGNED AND SEALED UNDER RULE 61G15-23.004, F.A.C.

REVISIONS	
DATE	DESCRIPTION

CITY OF PORT ORANGE
1000 CITY CENTER CIRCLE
PORT ORANGE, FL 32129

MERLYNN O. ANDERSON, P.E.
P.E. LICENSE NUMBER 83096

STANLEY CONSULTANTS, INC.
80 SPRING VISTA DRIVE
DEBARY, FL 32713

SJR2C LOOP TRAIL
FROM SOUTH OF SELIN CIR TO HERBERT ST

ROAD	COUNTY	FINANCIAL PROJECT ID
SPRUCE CREEK RD	VOLUSIA	439865-3-54-01

CROSS SECTION

SHEET NO.
21

5/14/2025 12:34:29 PM 5/14/2025 12:32:29 PM Projects\10962 (Port Orange)\TWO 09 - SUNTrail (SJR2C Loop) Spruce Creek Rd\CAD\439865\Roadway\RDXSRD01.dwg

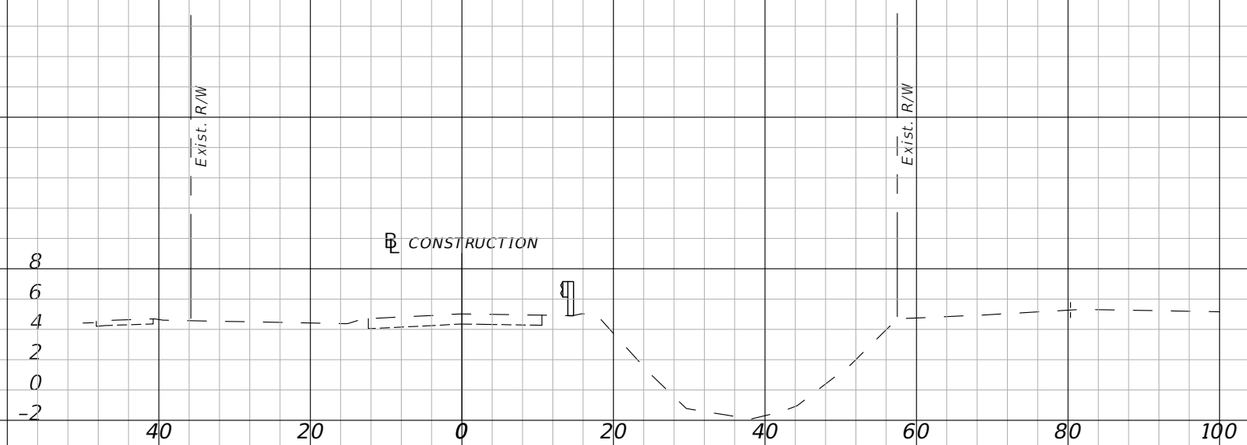

1" = 20' Horizontal
1" = 10' Vertical

THE OFFICIAL RECORD OF THIS SHEET IS THE ELECTRONIC FILE DIGITALLY SIGNED AND SEALED UNDER RULE 61G15-23.004, F.A.C.

REVISIONS	
DATE	DESCRIPTION

CITY OF PORT ORANGE
1000 CITY CENTER CIRCLE
PORT ORANGE, FL 32129

MERLYNN O. ANDERSON, P.E.
P.E. LICENSE NUMBER 83096

STANLEY CONSULTANTS, INC.
80 SPRING VISTA DRIVE
DEBARY, FL 32713

SJR2C LOOP TRAIL
FROM SOUTH OF SELIN CIR TO HERBERT ST

ROAD	COUNTY	FINANCIAL PROJECT ID
SPRUCE CREEK RD	VOLUSIA	439865-3-54-01

CROSS SECTION

SHEET NO.
22

5/14/2025 12:34:34 PM 5/14/2025 12:34:30 PM
Projects\10962 (Port Orange)\TWO 09 - SUNTrail (SJR2C Loop) Spruce Creek Rd\CAD\439865\Roadway\RDXSRD01.dwg

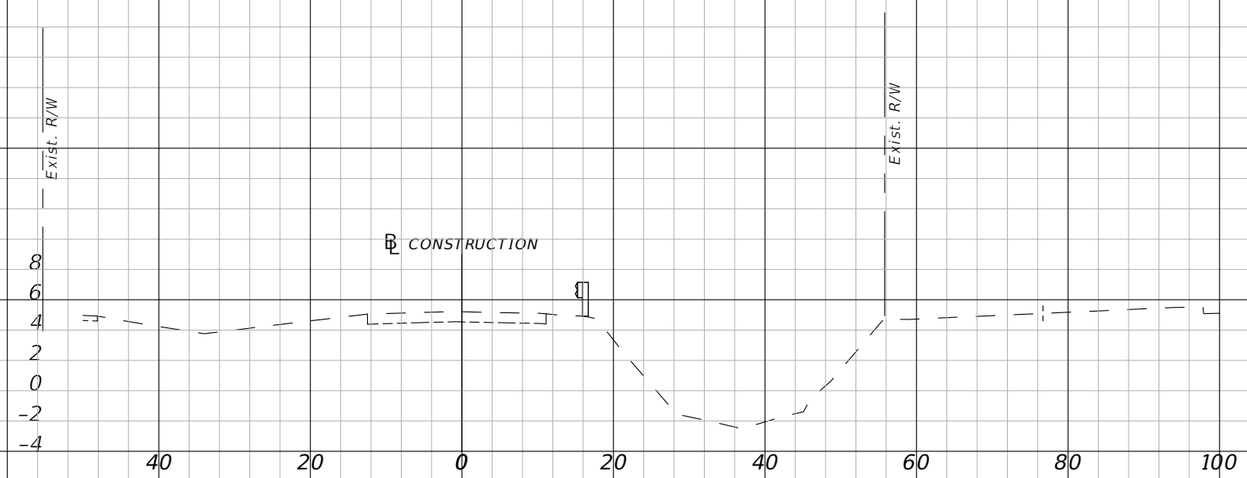

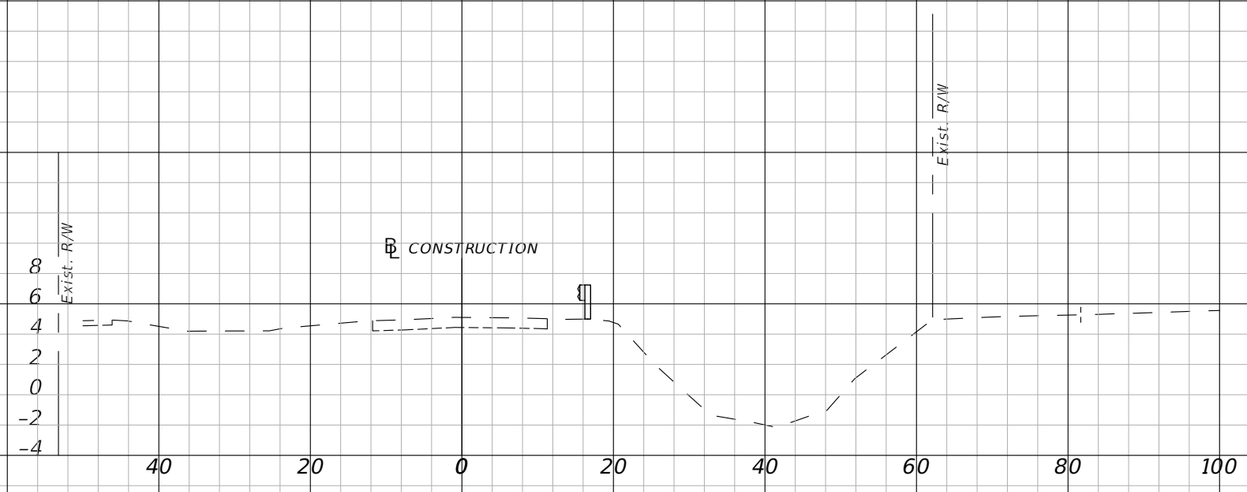

1" = 20' Horizontal
1" = 10' Vertical

THE OFFICIAL RECORD OF THIS SHEET IS THE ELECTRONIC FILE DIGITALLY SIGNED AND SEALED UNDER RULE 61G15-23.004, F.A.C.

REVISIONS	
DATE	DESCRIPTION

CITY OF PORT ORANGE
1000 CITY CENTER CIRCLE
PORT ORANGE, FL 32129

MERLYNN O. ANDERSON, P.E.
P.E. LICENSE NUMBER 83096

STANLEY CONSULTANTS, INC.
80 SPRING VISTA DRIVE
DEBARY, FL 32713

SJR2C LOOP TRAIL
FROM SOUTH OF SELIN CIR TO HERBERT ST

ROAD	COUNTY	FINANCIAL PROJECT ID
SPRUCE CREEK RD	VOLUSIA	439865-3-54-01

CROSS SECTION

SHEET NO.
23

5/14/2025 12:34:39 PM 5/14/2025 12:34:39 PM 4:39:06 Projects\10962 (Port Orange)\TWO 09 - SUNTrail (SJR2C Loop) Spruce Creek Rd\CAD\439865\Roadway\RDXSRD01.dwg

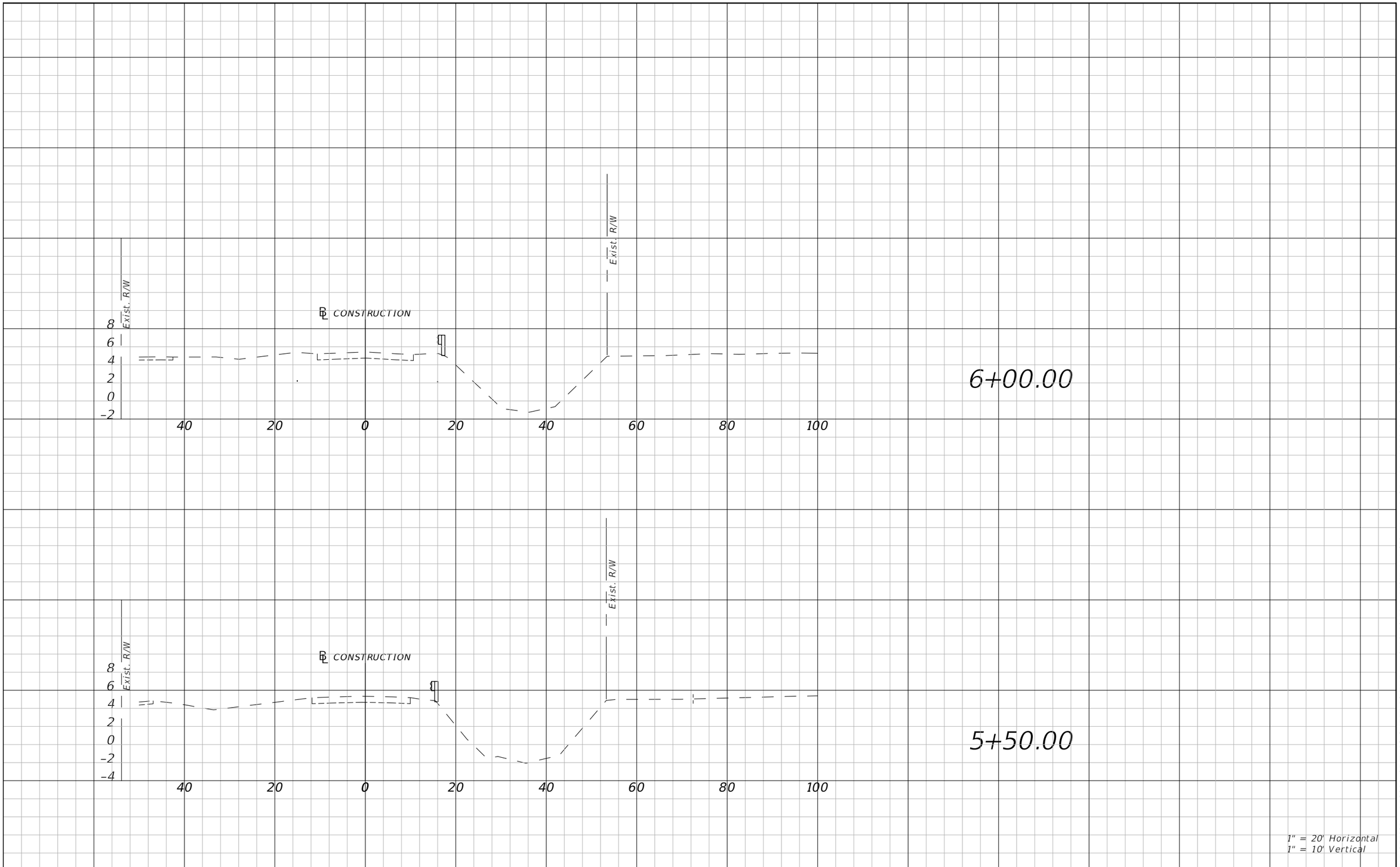

THE OFFICIAL RECORD OF THIS SHEET IS THE ELECTRONIC FILE DIGITALLY SIGNED AND SEALED UNDER RULE 61G15-23.004, F.A.C.

REVISIONS	
DATE	DESCRIPTION

CITY OF PORT ORANGE
1000 CITY CENTER CIRCLE
PORT ORANGE, FL 32129

MERLYNN O. ANDERSON, P.E.
P.E. LICENSE NUMBER 83096

STANLEY CONSULTANTS, INC.
80 SPRING VISTA DRIVE
DEBARY, FL 32713

SJR2C LOOP TRAIL
FROM SOUTH OF SELIN CIR TO HERBERT ST

ROAD	COUNTY	FINANCIAL PROJECT ID
SPRUCE CREEK RD	VOLUSIA	439865-3-54-01

CROSS SECTION

SHEET NO.
24

5/14/2025 12:34:44 PM 5/14/2025 12:34:40 PM Projects\10962 (Port Orange)\TWO 09 - SUNTrail (SJR2C Loop) Spruce Creek Rd\CAD\439865\Roadway\RDXSRD01.dwg

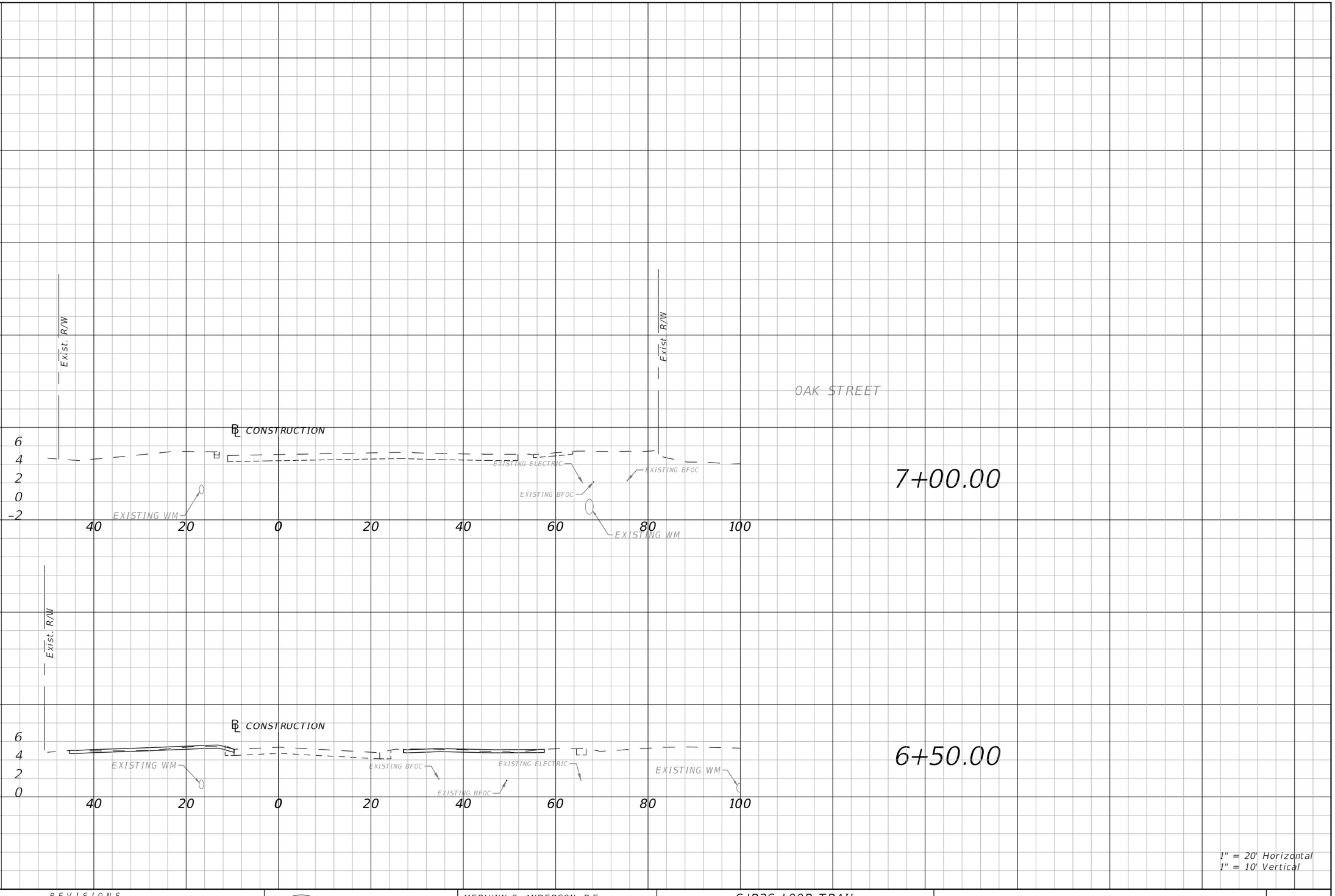

1" = 20' Horizontal
1" = 10' Vertical

THE OFFICIAL RECORD OF THIS SHEET IS THE ELECTRONIC FILE DIGITALLY SIGNED AND SEALED UNDER RULE 61G15-23.004, F.A.C.

REVISIONS	
DATE	DESCRIPTION

CITY OF PORT ORANGE
1000 CITY CENTER CIRCLE
PORT ORANGE, FL 32129

MERLYNN O. ANDERSON, P.E.
P.E. LICENSE NUMBER 83096

STANLEY CONSULTANTS, INC.
80 SPRING VISTA DRIVE
DEBARY, FL 32713

SJR2C LOOP TRAIL
FROM SOUTH OF SELIN CIR TO HERBERT ST

ROAD	COUNTY	FINANCIAL PROJECT ID
SPRUCE CREEK RD	VOLUSIA	439865-3-54-01

CROSS SECTION

SHEET NO. 25

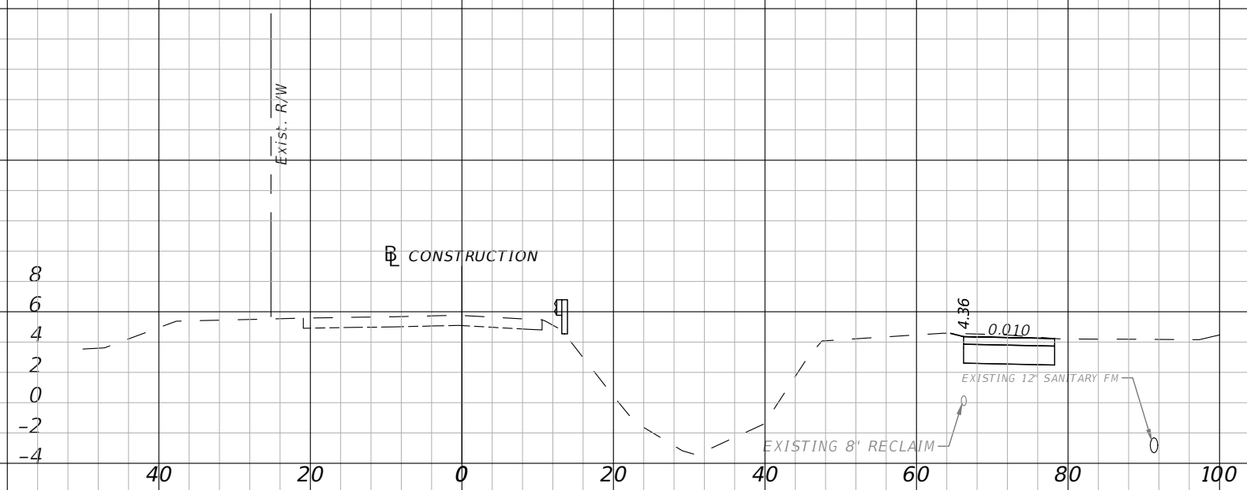

21+00.00

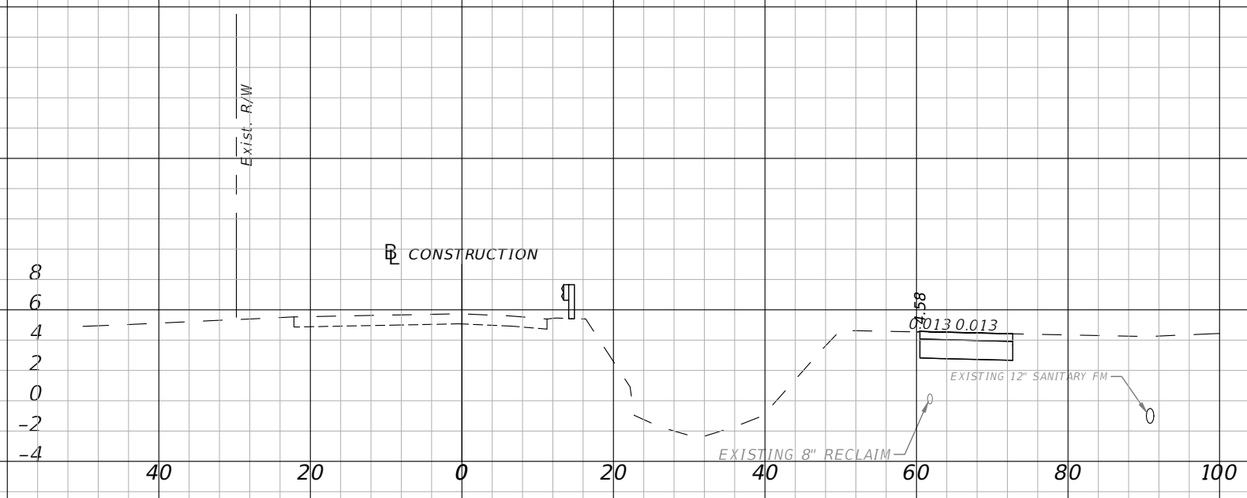

20+50.00

1" = 20' Horizontal
1" = 10' Vertical

THE OFFICIAL RECORD OF THIS SHEET IS THE ELECTRONIC FILE DIGITALLY SIGNED AND SEALED UNDER RULE 61G15-23.004, F.A.C.

REVISIONS	
DATE	DESCRIPTION

CITY OF PORT ORANGE
1000 CITY CENTER CIRCLE
PORT ORANGE, FL 32129

MERLYNN O. ANDERSON, P.E.
P.E. LICENSE NUMBER 83096

STANLEY CONSULTANTS, INC.
80 SPRING VISTA DRIVE
DEBARY, FL 32713

SJR2C LOOP TRAIL
FROM SOUTH OF SELIN CIR TO HERBERT ST

ROAD	COUNTY	FINANCIAL PROJECT ID
SPRUCE CREEK RD	VOLUSIA	439865-3-54-01

CROSS SECTION

SHEET NO.
26

5/14/2025 12:34:54 PM 5/14/2025 12:34:54 PM 4:52:06 Projects\10962 (Port Orange)\TWO 09 - SUNTrail (SJR2C Loop) Spruce Creek Rd\CAD\439865\Roadway\RDXSRD01.dwg

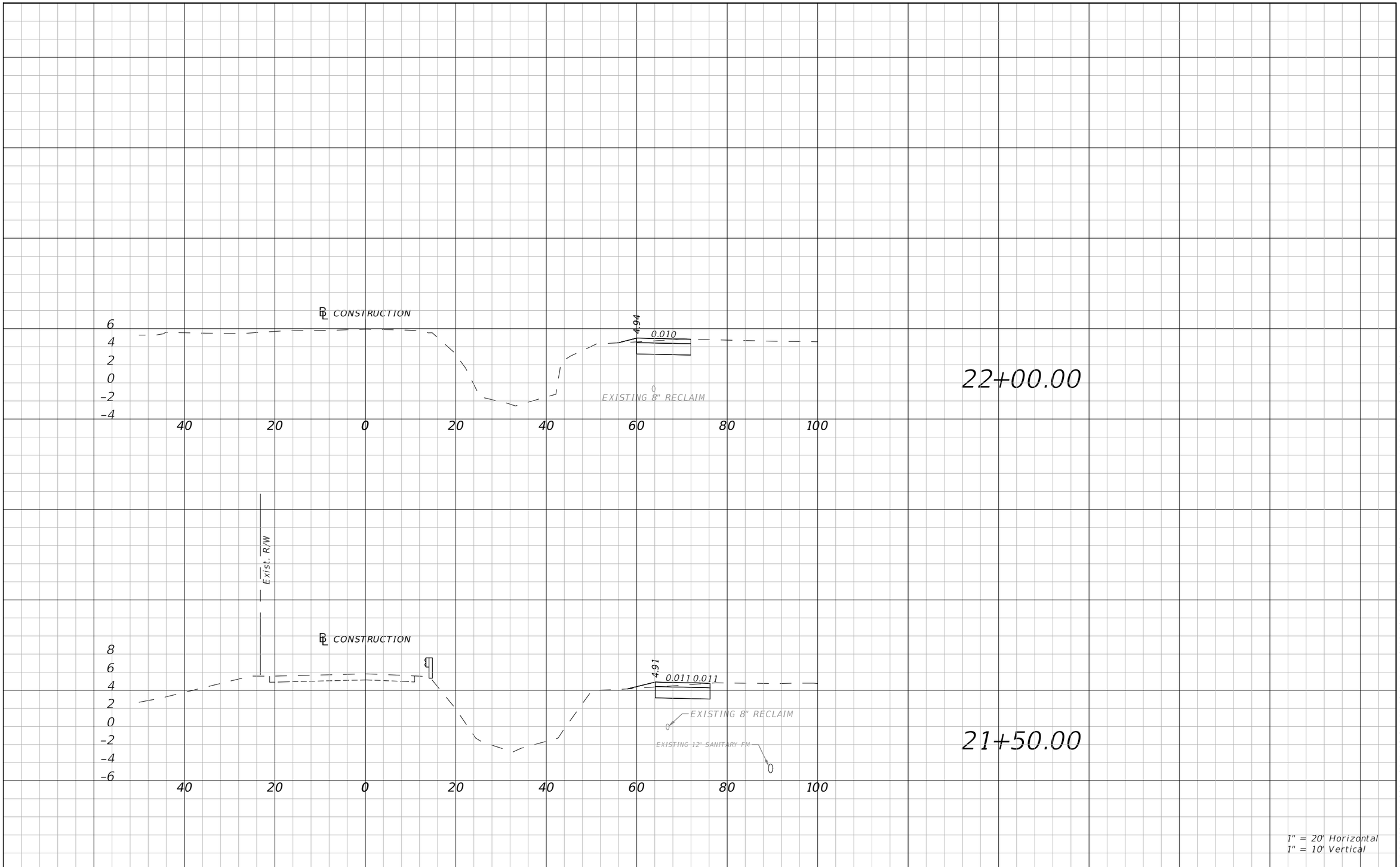

THE OFFICIAL RECORD OF THIS SHEET IS THE ELECTRONIC FILE DIGITALLY SIGNED AND SEALED UNDER RULE 61G15-23.004, F.A.C.

REVISIONS	
DATE	DESCRIPTION

CITY OF PORT ORANGE
1000 CITY CENTER CIRCLE
PORT ORANGE, FL 32129

MERLYNN O. ANDERSON, P.E.
P.E. LICENSE NUMBER 83096

STANLEY CONSULTANTS, INC.
80 SPRING VISTA DRIVE
DEBARY, FL 32713

SJR2C LOOP TRAIL
FROM SOUTH OF SELIN CIR TO HERBERT ST

ROAD	COUNTY	FINANCIAL PROJECT ID
SPRUCE CREEK RD	VOLUSIA	439865-3-54-01

CROSS SECTION

SHEET NO.
27

5/14/2025 12:34:59 PM 5/14/2025 12:34:59 PM 7:52:06 Projects\10962 (Port Orange)\TWO 09 - SUNTrail (SJR2C Loop) Spruce Creek Rd\CAD\439865\Roadway\RDXSRD01.dwg



1" = 20' Horizontal
1" = 10' Vertical

THE OFFICIAL RECORD OF THIS SHEET IS THE ELECTRONIC FILE DIGITALLY SIGNED AND SEALED UNDER RULE 61G15-23.004, F.A.C.

REVISIONS	
DATE	DESCRIPTION

CITY OF PORT ORANGE
1000 CITY CENTER CIRCLE
PORT ORANGE, FL 32129

MERLYNN O. ANDERSON, P.E.
P.E. LICENSE NUMBER 83096

STANLEY CONSULTANTS, INC.
80 SPRING VISTA DRIVE
DEBARY, FL 32713

SJR2C LOOP TRAIL
FROM SOUTH OF SELIN CIR TO HERBERT ST

ROAD	COUNTY	FINANCIAL PROJECT ID
SPRUCE CREEK RD	VOLUSIA	439865-3-54-01

CROSS SECTION

SHEET NO.
28

5/14/2025 12:35:04 PM 5/14/2025 12:35:04 PM Projects\10962 (Port Orange)\TWO 09 - SUNTrail (SJR2C Loop) Spruce Creek Rd\CAD\439865\Roadway\RDXSRD01.dwg

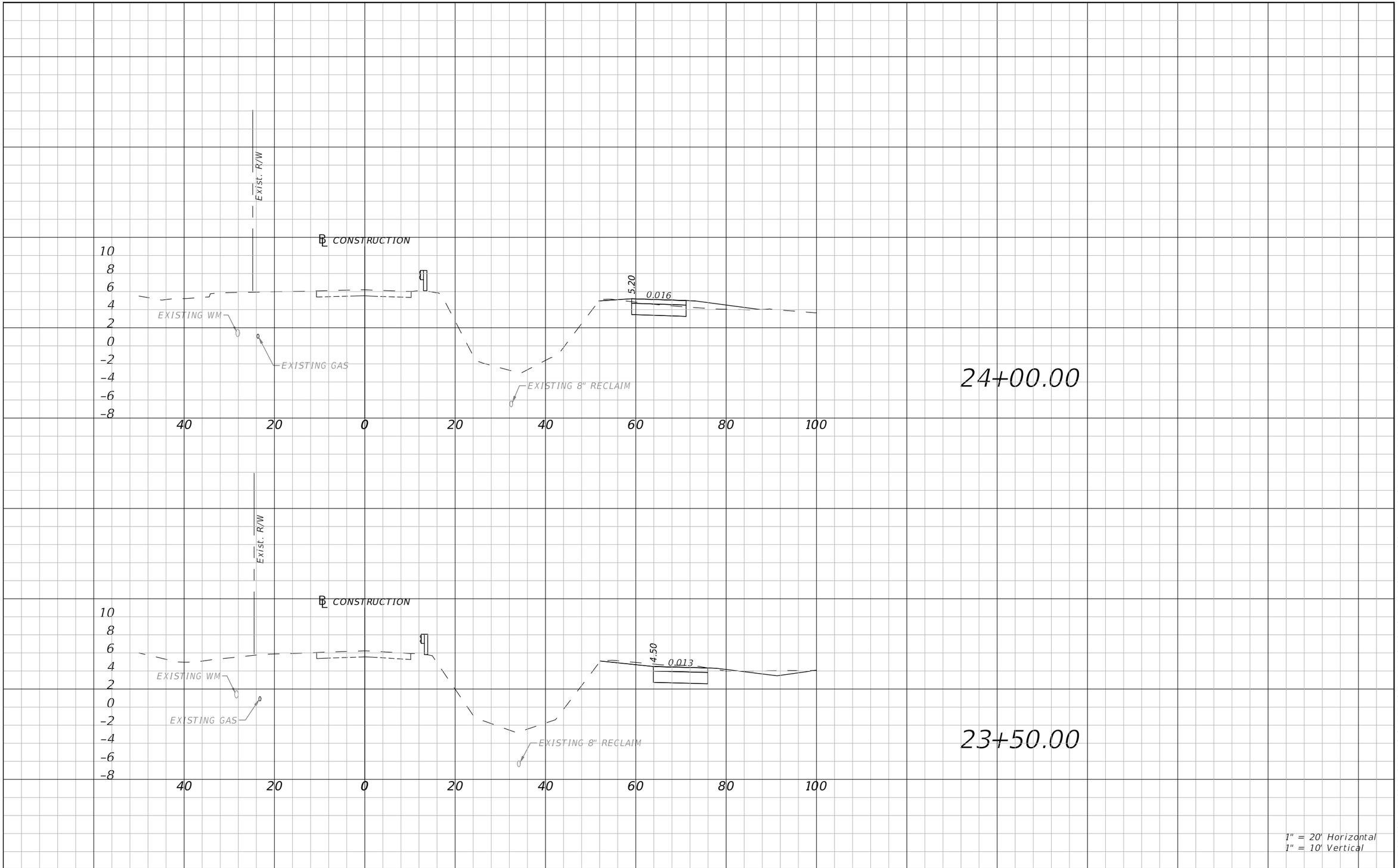

THE OFFICIAL RECORD OF THIS SHEET IS THE ELECTRONIC FILE DIGITALLY SIGNED AND SEALED UNDER RULE 61G15-23.004, F.A.C.

REVISIONS	
DATE	DESCRIPTION

CITY OF PORT ORANGE
1000 CITY CENTER CIRCLE
PORT ORANGE, FL 32129

MERLYNN O. ANDERSON, P.E.
P.E. LICENSE NUMBER 83096

STANLEY CONSULTANTS, INC.
80 SPRING VISTA DRIVE
DEBARY, FL 32713

SJR2C LOOP TRAIL
FROM SOUTH OF SELIN CIR TO HERBERT ST

ROAD	COUNTY	FINANCIAL PROJECT ID
SPRUCE CREEK RD	VOLUSIA	439865-3-54-01

CROSS SECTION

SHEET NO.
29

5/14/2025 12:35:09 PM 5/14/2025 12:35:09 PM Projects\10962 (Port Orange)\TWO 09 - SUNTrail (SJR2C Loop) Spruce Creek Rd\CAD\439865\Roadway\RDXSRD01.dwg

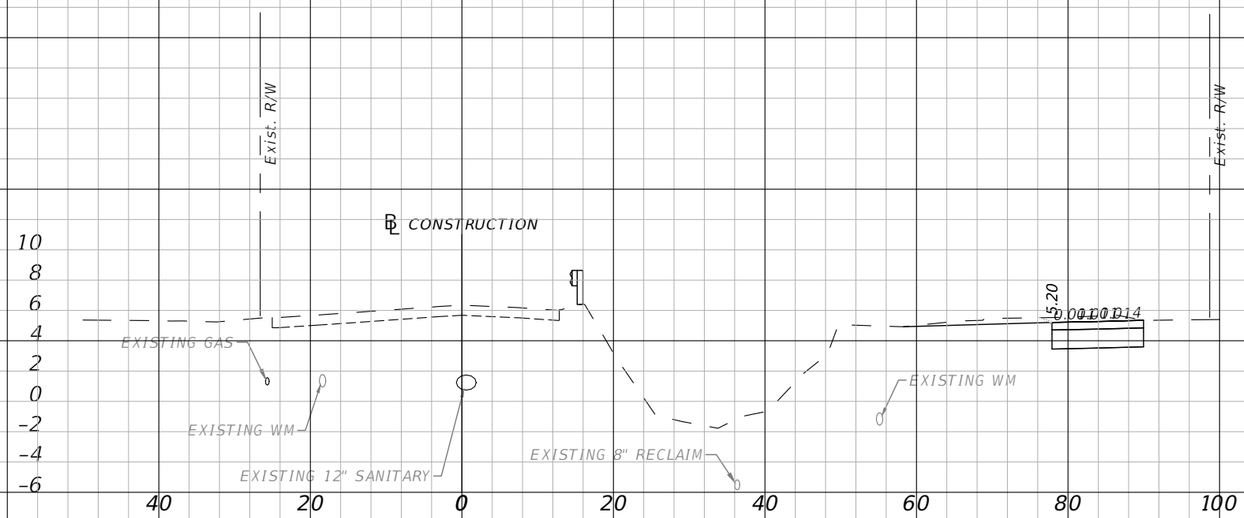

1" = 20' Horizontal
1" = 10' Vertical

THE OFFICIAL RECORD OF THIS SHEET IS THE ELECTRONIC FILE DIGITALLY SIGNED AND SEALED UNDER RULE 61G15-23.004, F.A.C.

REVISIONS	
DATE	DESCRIPTION

CITY OF PORT ORANGE
1000 CITY CENTER CIRCLE
PORT ORANGE, FL 32129

MERLYNN O. ANDERSON, P.E.
P.E. LICENSE NUMBER 83096

STANLEY CONSULTANTS, INC.
80 SPRING VISTA DRIVE
DEBARY, FL 32713

SJR2C LOOP TRAIL
FROM SOUTH OF SELIN CIR TO HERBERT ST

ROAD	COUNTY	FINANCIAL PROJECT ID
SPRUCE CREEK RD	VOLUSIA	439865-3-54-01

CROSS SECTION

SHEET NO.
30

5/14/2025 12:35:14 PM 5/14/2025 12:35:14 PM Projects\10962 (Port Orange)\TWO 09 - SUNTrail (SJR2C Loop) Spruce Creek Rd\CAD\439865\Roadway\RDXSRD01.dwg



26+00.00

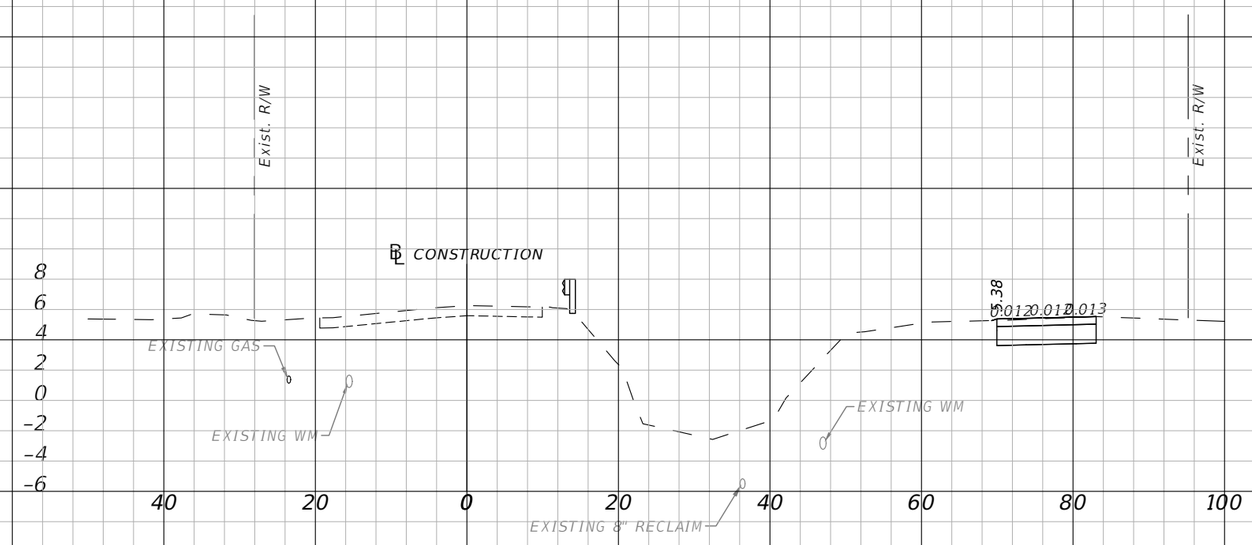

25+50.00

1" = 20' Horizontal
1" = 10' Vertical

THE OFFICIAL RECORD OF THIS SHEET IS THE ELECTRONIC FILE DIGITALLY SIGNED AND SEALED UNDER RULE 61G15-23.004, F.A.C.

REVISIONS	
DATE	DESCRIPTION

CITY OF PORT ORANGE
1000 CITY CENTER CIRCLE
PORT ORANGE, FL 32129

MERLYNN O. ANDERSON, P.E.
P.E. LICENSE NUMBER 83096

STANLEY CONSULTANTS, INC.
80 SPRING VISTA DRIVE
DEBARY, FL 32713

SJR2C LOOP TRAIL
FROM SOUTH OF SELIN CIR TO HERBERT ST

ROAD	COUNTY	FINANCIAL PROJECT ID
SPRUCE CREEK RD	VOLUSIA	439865-3-54-01

CROSS SECTION

SHEET NO.
31

5/14/2025 12:35:19 PM 5/14/2025 12:35:19 PM Projects\10962 (Port Orange)\TWO 09 - SUNTrail (SJR2C Loop) Spruce Creek Rd\CAD\439865\Roadway\RDXSRD01.dwg

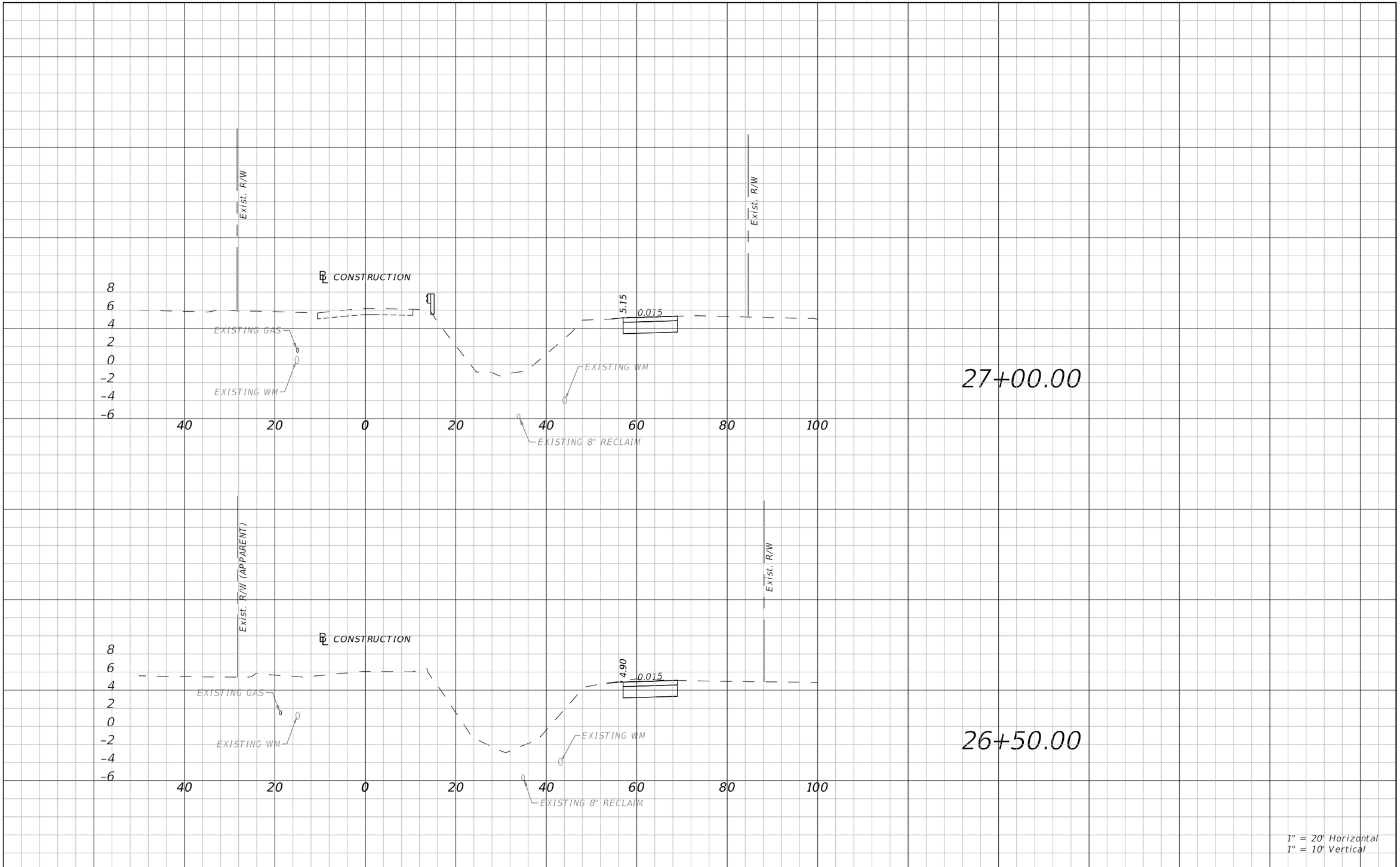

THE OFFICIAL RECORD OF THIS SHEET IS THE ELECTRONIC FILE DIGITALLY SIGNED AND SEALED UNDER RULE 61G15-23.004, F.A.C.

REVISIONS	
DATE	DESCRIPTION

CITY OF PORT ORANGE
1000 CITY CENTER CIRCLE
PORT ORANGE, FL 32129

MERLYNN O. ANDERSON, P.E.
P.E. LICENSE NUMBER 83096

STANLEY CONSULTANTS, INC.
80 SPRING VISTA DRIVE
DEBARY, FL 32713

SJR2C LOOP TRAIL
FROM SOUTH OF SELIN CIR TO HERBERT ST

ROAD	COUNTY	FINANCIAL PROJECT ID
SPRUCE CREEK RD	VOLUSIA	439865-3-54-01

CROSS SECTION

SHEET NO.
32

5/14/2025 12:35:24 PM 5/14/2025 12:35:24 PM Projects\10962 (Port Orange)\TWO 09 - SUNTrail (SJR2C Loop) Spruce Creek Rd\CAD\439865\Roadway\RDXSRD01.dwg

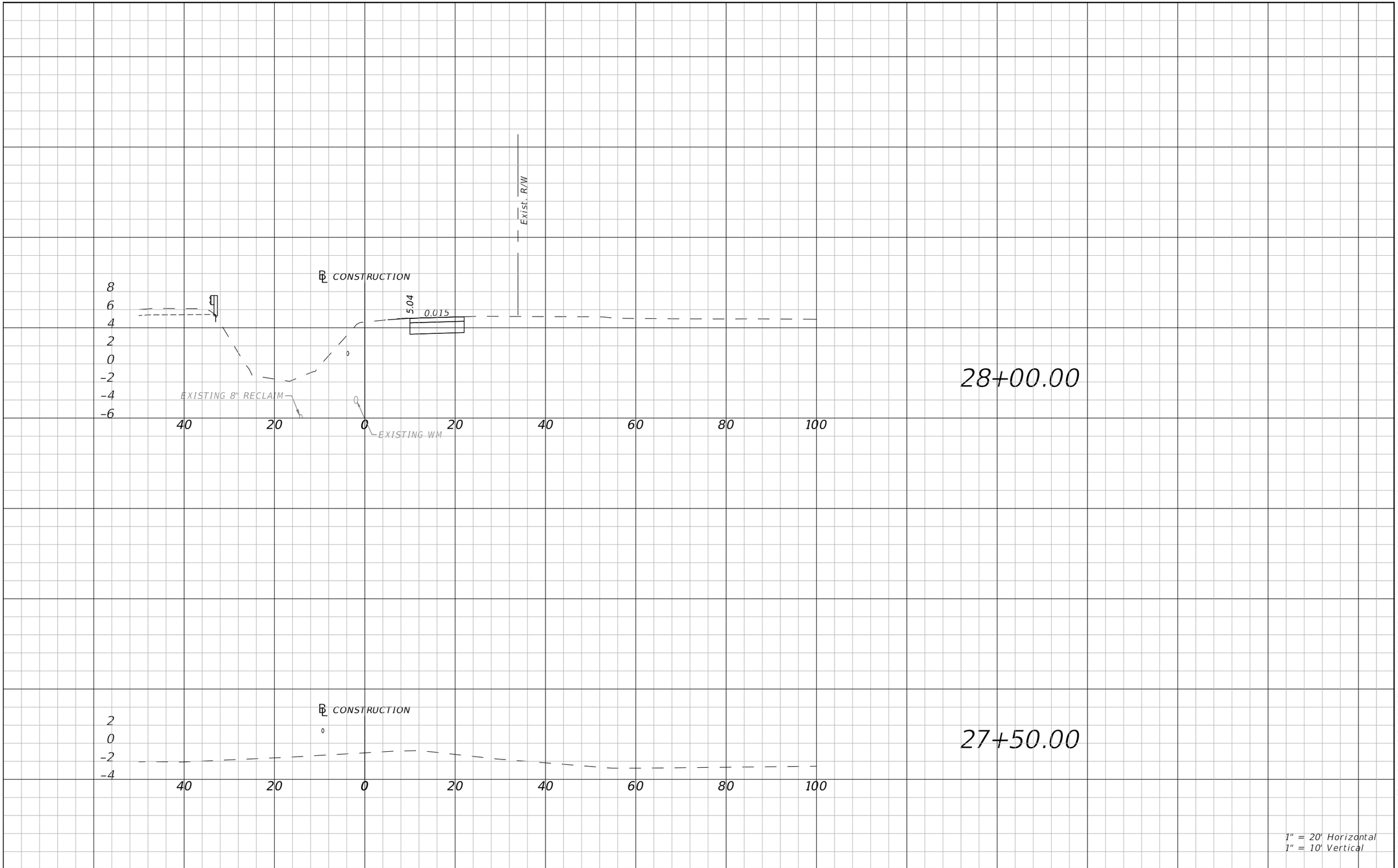

THE OFFICIAL RECORD OF THIS SHEET IS THE ELECTRONIC FILE DIGITALLY SIGNED AND SEALED UNDER RULE 61G15-23.004, F.A.C.

REVISIONS	
DATE	DESCRIPTION

CITY OF PORT ORANGE
1000 CITY CENTER CIRCLE
PORT ORANGE, FL 32129

MERLYNN O. ANDERSON, P.E.
P.E. LICENSE NUMBER 83096

STANLEY CONSULTANTS, INC.
80 SPRING VISTA DRIVE
DEBARY, FL 32713

SJR2C LOOP TRAIL
FROM SOUTH OF SELIN CIR TO HERBERT ST

ROAD	COUNTY	FINANCIAL PROJECT ID
SPRUCE CREEK RD	VOLUSIA	439865-3-54-01

CROSS SECTION

SHEET NO.
33

5/14/2025 12:35:29 PM 5/14/2025 12:35:29 PM Projects\10962 (Port Orange)\TWO 09 - SUNTrail (SJR2C Loop) Spruce Creek Rd\CAD\439865\Roadway\RDXSRD01.dwg

SEE GRAVITY WALL PLAN AND PROFILE SHEETS 18 AND 19 FOR WALL BOTTOM ELEVATIONS.

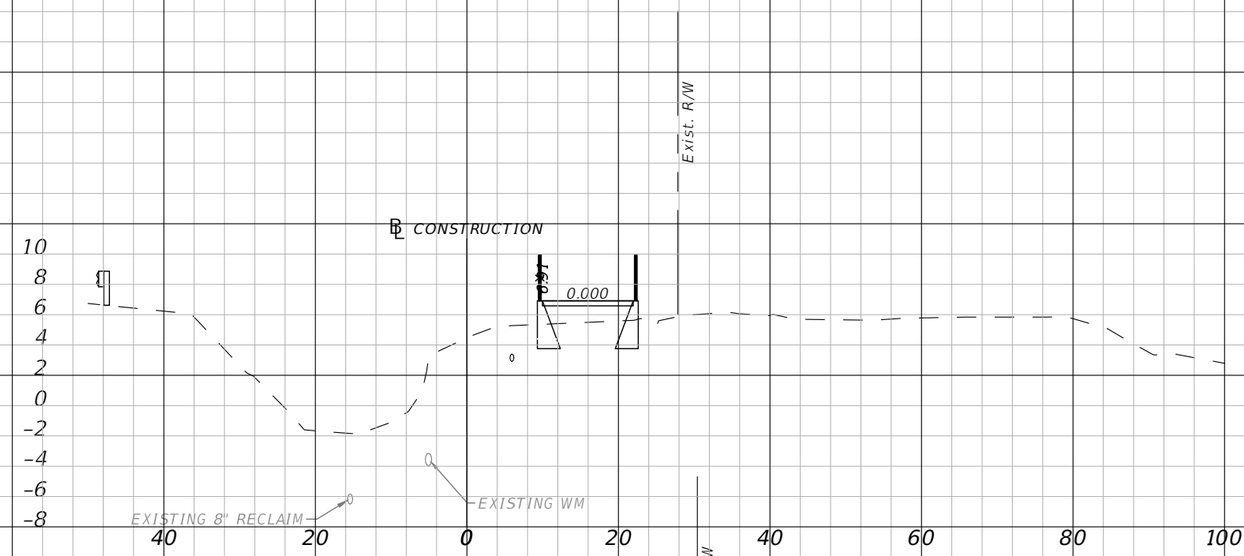

29+00.00

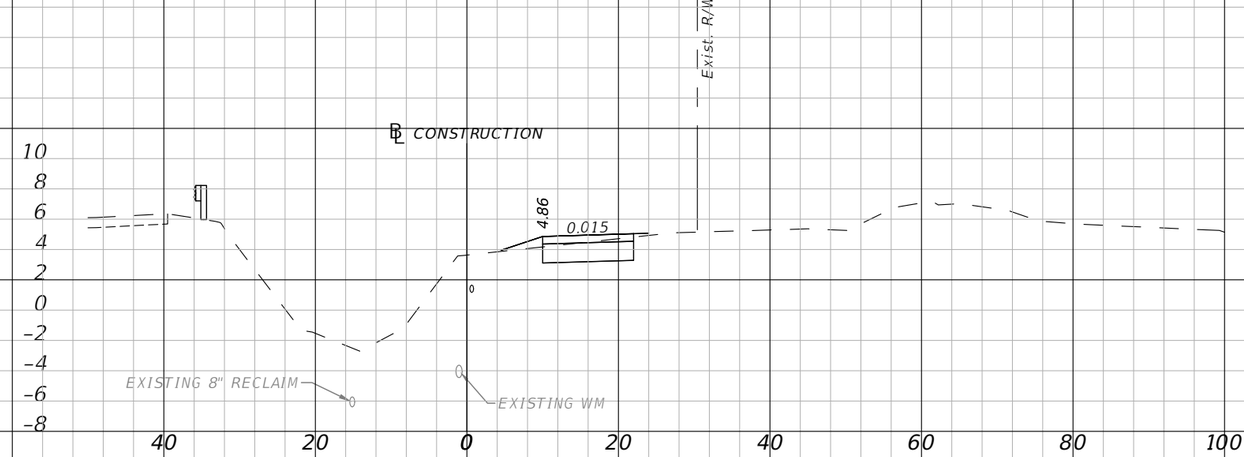

28+50.00

1" = 20' Horizontal
1" = 10' Vertical

THE OFFICIAL RECORD OF THIS SHEET IS THE ELECTRONIC FILE DIGITALLY SIGNED AND SEALED UNDER RULE 61G15-23.004, F.A.C.

REVISIONS	
DATE	DESCRIPTION

CITY OF PORT ORANGE
1000 CITY CENTER CIRCLE
PORT ORANGE, FL 32129

MERLYNN O. ANDERSON, P.E.
P.E. LICENSE NUMBER 83096

STANLEY CONSULTANTS, INC.
80 SPRING VISTA DRIVE
DEBARY, FL 32713

SJR2C LOOP TRAIL
FROM SOUTH OF SELIN CIR TO HERBERT ST

ROAD	COUNTY	FINANCIAL PROJECT ID
SPRUCE CREEK RD	VOLUSIA	439865-3-54-01

CROSS SECTION

SHEET NO.
34

5/14/2025 12:35:35 PM 5/14/2025 12:35:35 PM S:\Projects\10962 (Port Orange)\TWO 09 - SUNTrail (SJR2C Loop) Spruce Creek Rd\CAD\439865\Roadway\RDXSRD01.dwg

SEE GRAVITY WALL PLAN AND PROFILE SHEETS 18 AND 19 FOR WALL BOTTOM ELEVATIONS.

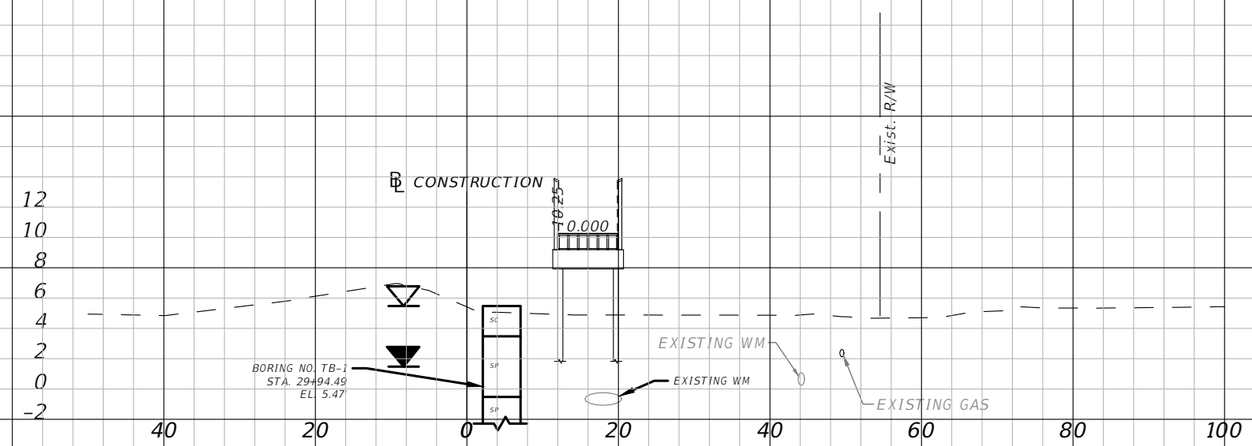

30+00.00

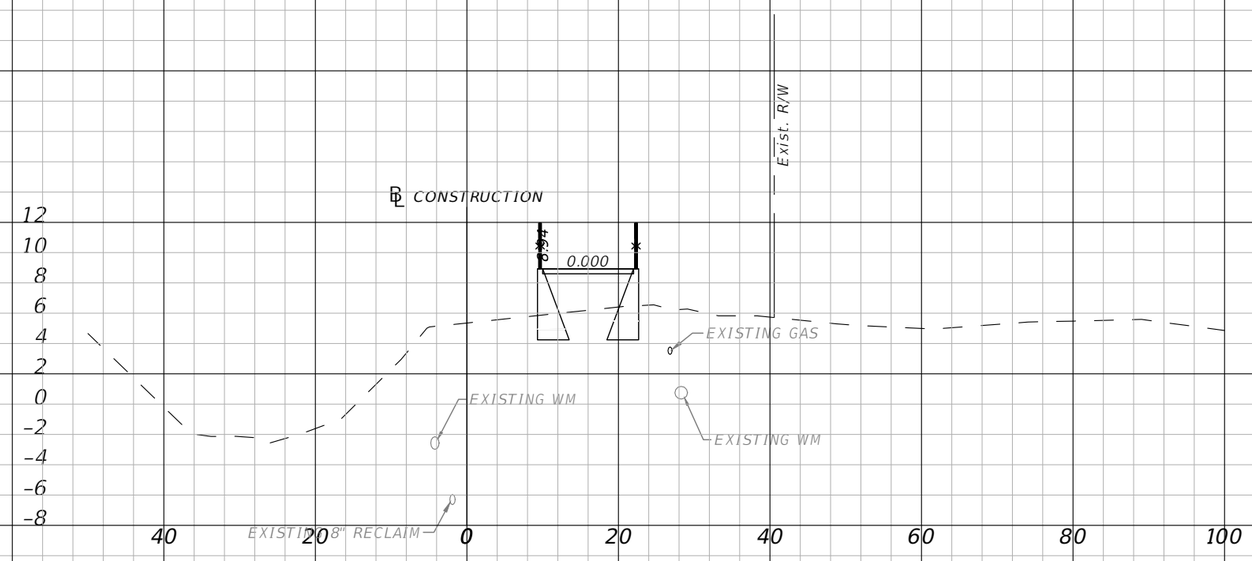

29+50.00

1" = 20' Horizontal
1" = 10' Vertical

THE OFFICIAL RECORD OF THIS SHEET IS THE ELECTRONIC FILE DIGITALLY SIGNED AND SEALED UNDER RULE 61G15-23.004, F.A.C.

REVISIONS	
DATE	DESCRIPTION

CITY OF PORT ORANGE
1000 CITY CENTER CIRCLE
PORT ORANGE, FL 32129

MERLYNN O. ANDERSON, P.E.
P.E. LICENSE NUMBER 83096

STANLEY CONSULTANTS, INC.
80 SPRING VISTA DRIVE
DEBARY, FL 32713

SJR2C LOOP TRAIL
FROM SOUTH OF SELIN CIR TO HERBERT ST

ROAD	COUNTY	FINANCIAL PROJECT ID
SPRUCE CREEK RD	VOLUSIA	439865-3-54-01

CROSS SECTION

SHEET NO. 35

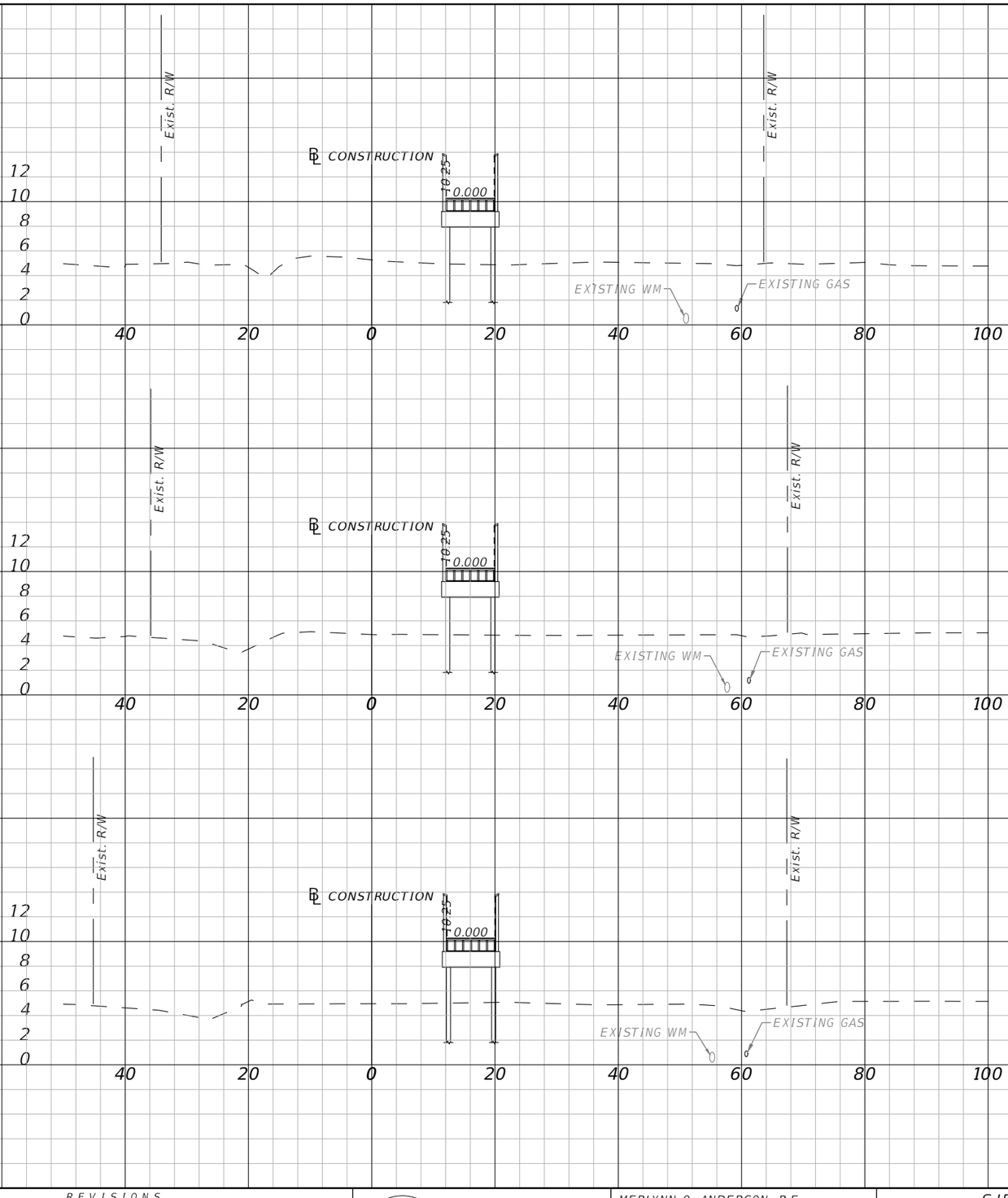

31+50.00

31+00.00

30+50.00

1" = 20' Horizontal
1" = 10' Vertical

THE OFFICIAL RECORD OF THIS SHEET IS THE ELECTRONIC FILE DIGITALLY SIGNED AND SEALED UNDER RULE 61G15-23.004, F.A.C.

REVISIONS	
DATE	DESCRIPTION

CITY OF PORT ORANGE
1000 CITY CENTER CIRCLE
PORT ORANGE, FL 32129

MERLYNN O. ANDERSON, P.E.
P.E. LICENSE NUMBER 83096

STANLEY CONSULTANTS, INC.
80 SPRING VISTA DRIVE
DEBARY, FL 32713

SJR2C LOOP TRAIL
FROM SOUTH OF SELIN CIR TO HERBERT ST

ROAD	COUNTY	FINANCIAL PROJECT ID
SPRUCE CREEK RD	VOLUSIA	439865-3-54-01

CROSS SECTION

SHEET NO. 36

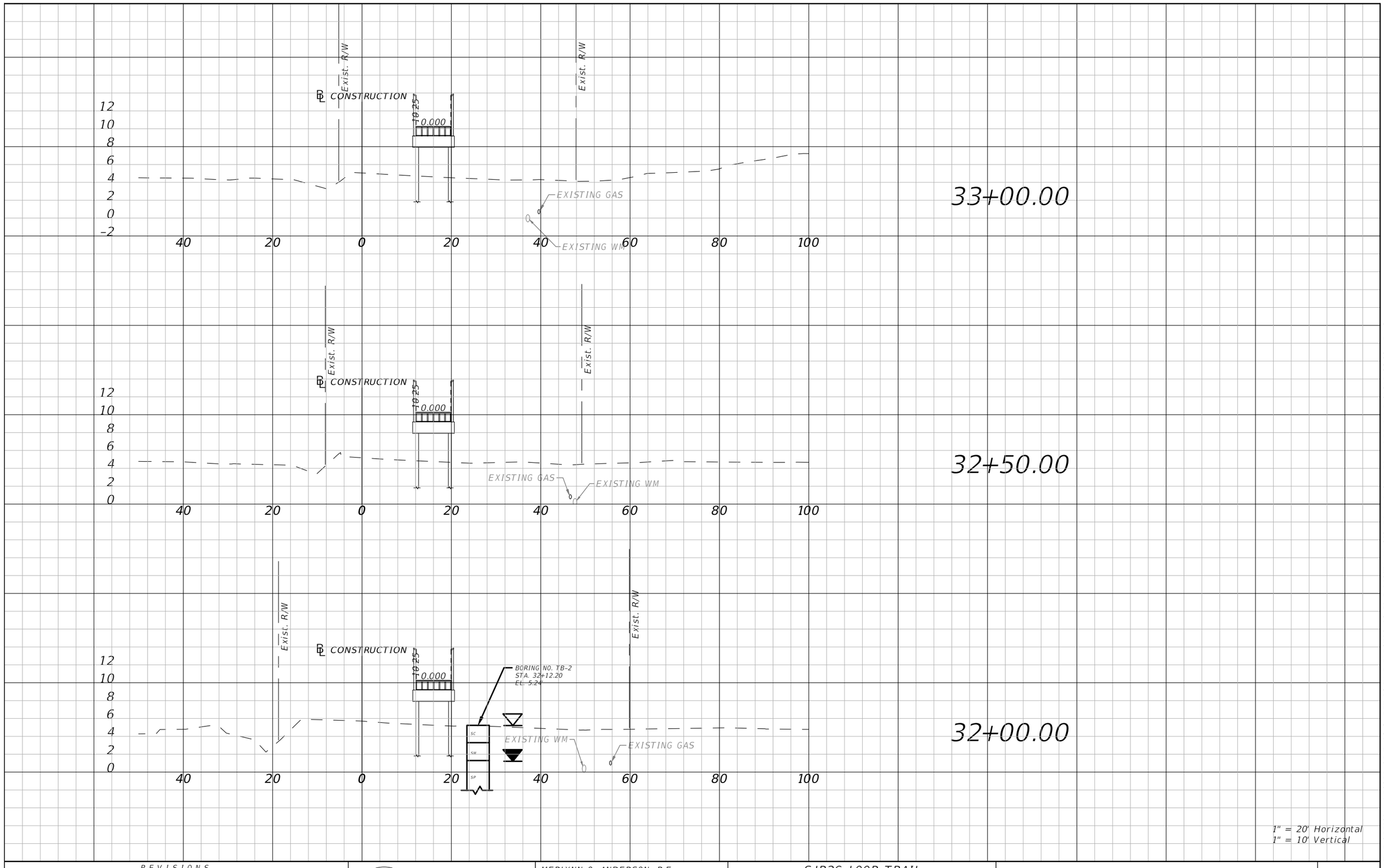

THE OFFICIAL RECORD OF THIS SHEET IS THE ELECTRONIC FILE DIGITALLY SIGNED AND SEALED UNDER RULE 61G15-23.004, F.A.C.

REVISIONS	
DATE	DESCRIPTION

CITY OF PORT ORANGE
1000 CITY CENTER CIRCLE
PORT ORANGE, FL 32129

MERLYNN O. ANDERSON, P.E.
P.E. LICENSE NUMBER 83096

STANLEY CONSULTANTS, INC.
80 SPRING VISTA DRIVE
DEBARY, FL 32713

SJR2C LOOP TRAIL
FROM SOUTH OF SELIN CIR TO HERBERT ST

ROAD	COUNTY	FINANCIAL PROJECT ID
SPRUCE CREEK RD	VOLUSIA	439865-3-54-01

CROSS SECTION

SHEET NO.
37

O'Neill, Karen 5/14/2025 12:35:49 PM 5/14/2025 12:35:49 PM Projects\10962 (Port Orange)\TWO 09 - SUNTrail (SJR2C Loop) Spruce Creek Rd\CAD\439865\Roadway\RDXSRD01.dwg

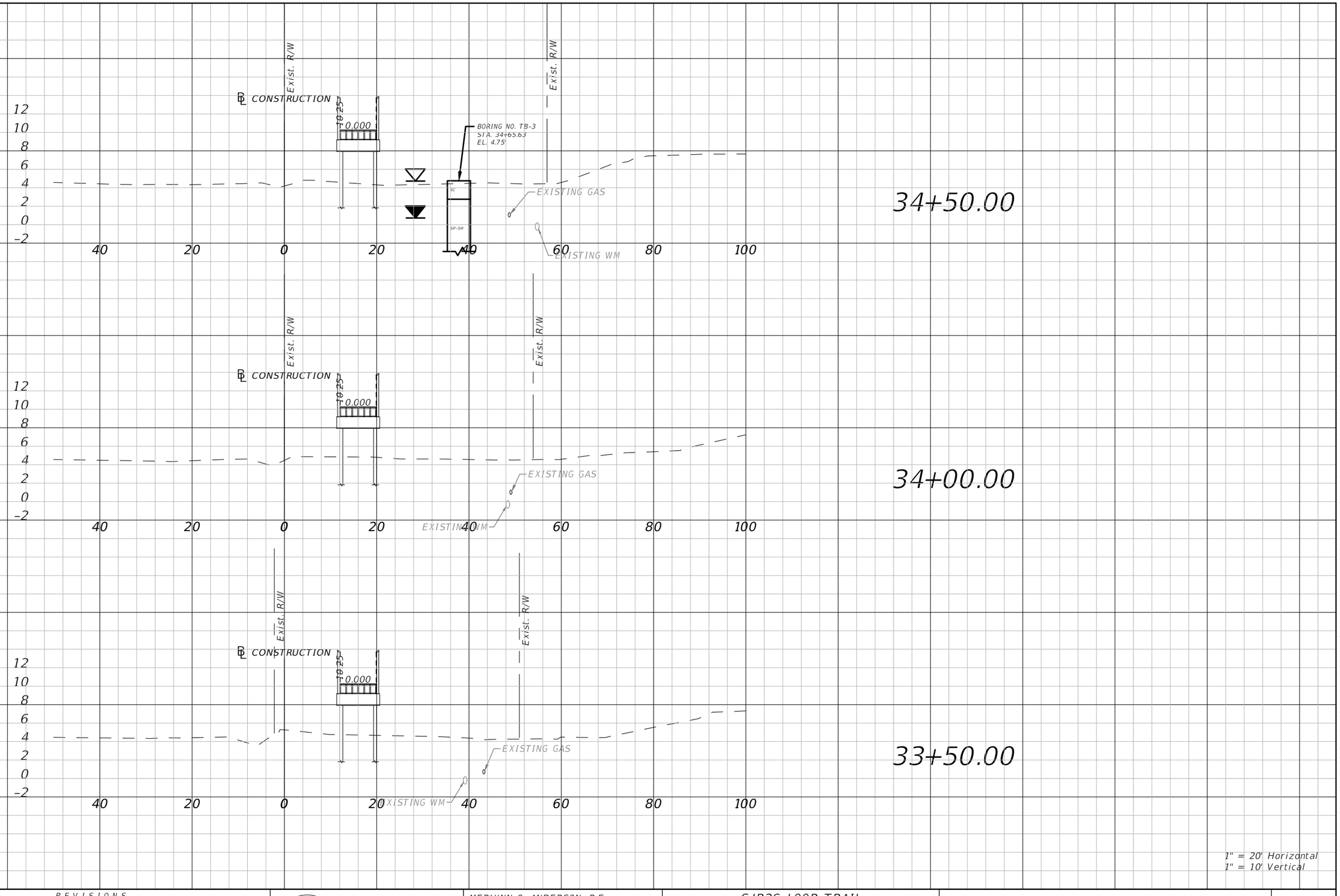

THE OFFICIAL RECORD OF THIS SHEET IS THE ELECTRONIC FILE DIGITALLY SIGNED AND SEALED UNDER RULE 61G15-23.004, F.A.C.

REVISIONS	
DATE	DESCRIPTION

CITY OF PORT ORANGE
1000 CITY CENTER CIRCLE
PORT ORANGE, FL 32129

MERLYNN O. ANDERSON, P.E.
P.E. LICENSE NUMBER 83096

STANLEY CONSULTANTS, INC.
80 SPRING VISTA DRIVE
DEBARY, FL 32713

SJR2C LOOP TRAIL
FROM SOUTH OF SELIN CIR TO HERBERT ST

ROAD	COUNTY	FINANCIAL PROJECT ID
SPRUCE CREEK RD	VOLUSIA	439865-3-54-01

CROSS SECTION

SHEET NO.
38

O'Neill, Karen 5/14/2025 12:35:54 PM 5/14/2025 12:35:54 PM Projects\10962 (Port Orange)\TWO 09 - SUNTrail (SJR2C Loop) Spruce Creek Rd\CAD\439865\Roadway\RDXSRD01.dwg

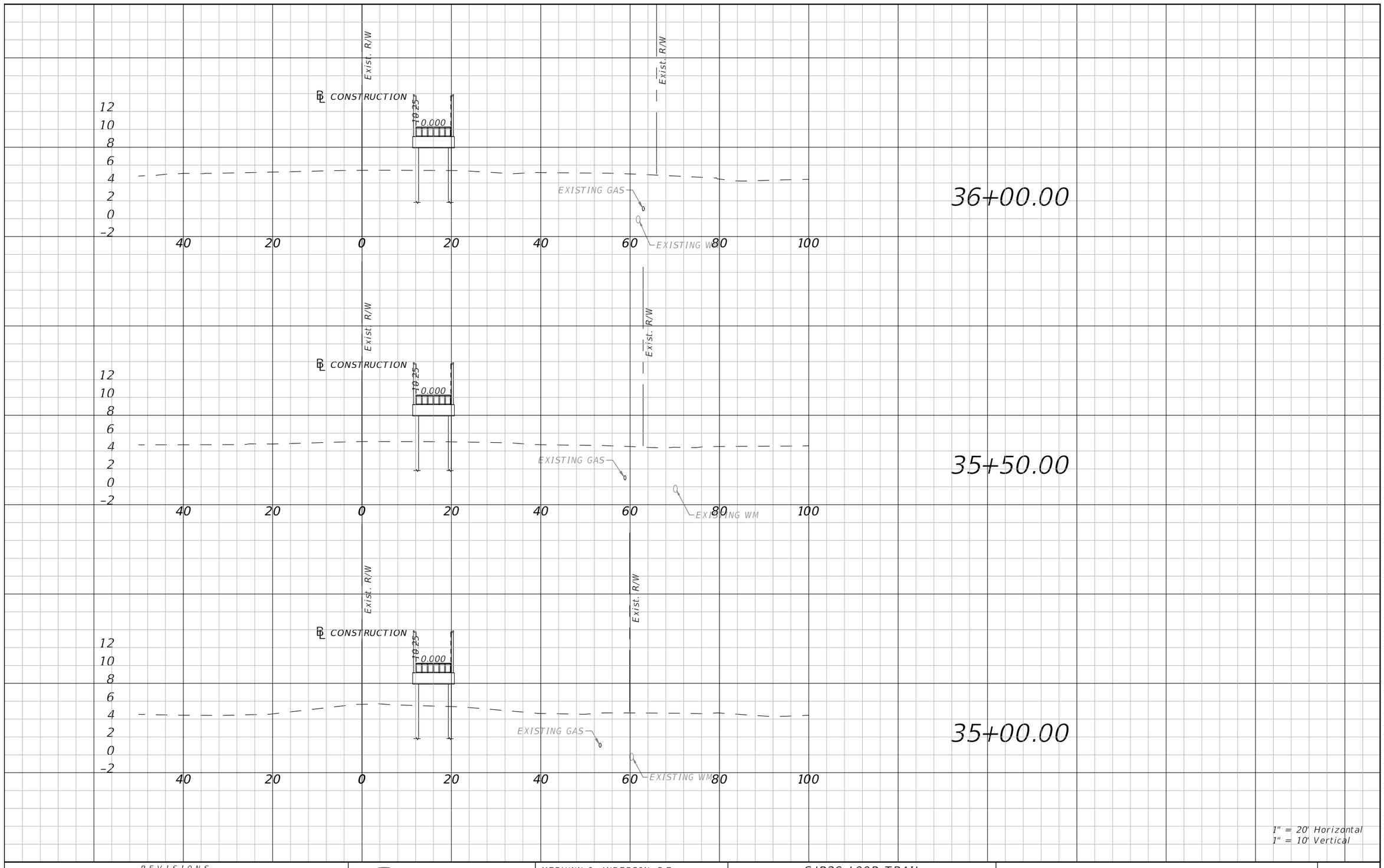

THE OFFICIAL RECORD OF THIS SHEET IS THE ELECTRONIC FILE DIGITALLY SIGNED AND SEALED UNDER RULE 61G15-23.004, F.A.C.

REVISIONS	
DATE	DESCRIPTION

CITY OF PORT ORANGE
1000 CITY CENTER CIRCLE
PORT ORANGE, FL 32129

MERLYNN O. ANDERSON, P.E.
P.E. LICENSE NUMBER 83096

STANLEY CONSULTANTS, INC.
80 SPRING VISTA DRIVE
DEBARY, FL 32713

SJR2C LOOP TRAIL
FROM SOUTH OF SELIN CIR TO HERBERT ST

ROAD	COUNTY	FINANCIAL PROJECT ID
SPRUCE CREEK RD	VOLUSIA	439865-3-54-01

CROSS SECTION

SHEET NO.
39

5/14/2025 12:36:00 PM 5/14/2025 12:36:00 PM Projects\10962 (Port Orange)\TWO 09 - SUNTrail (SJR2C Loop) Spruce Creek Rd\CAD\439865\Roadway\RDXSRD01.dwg

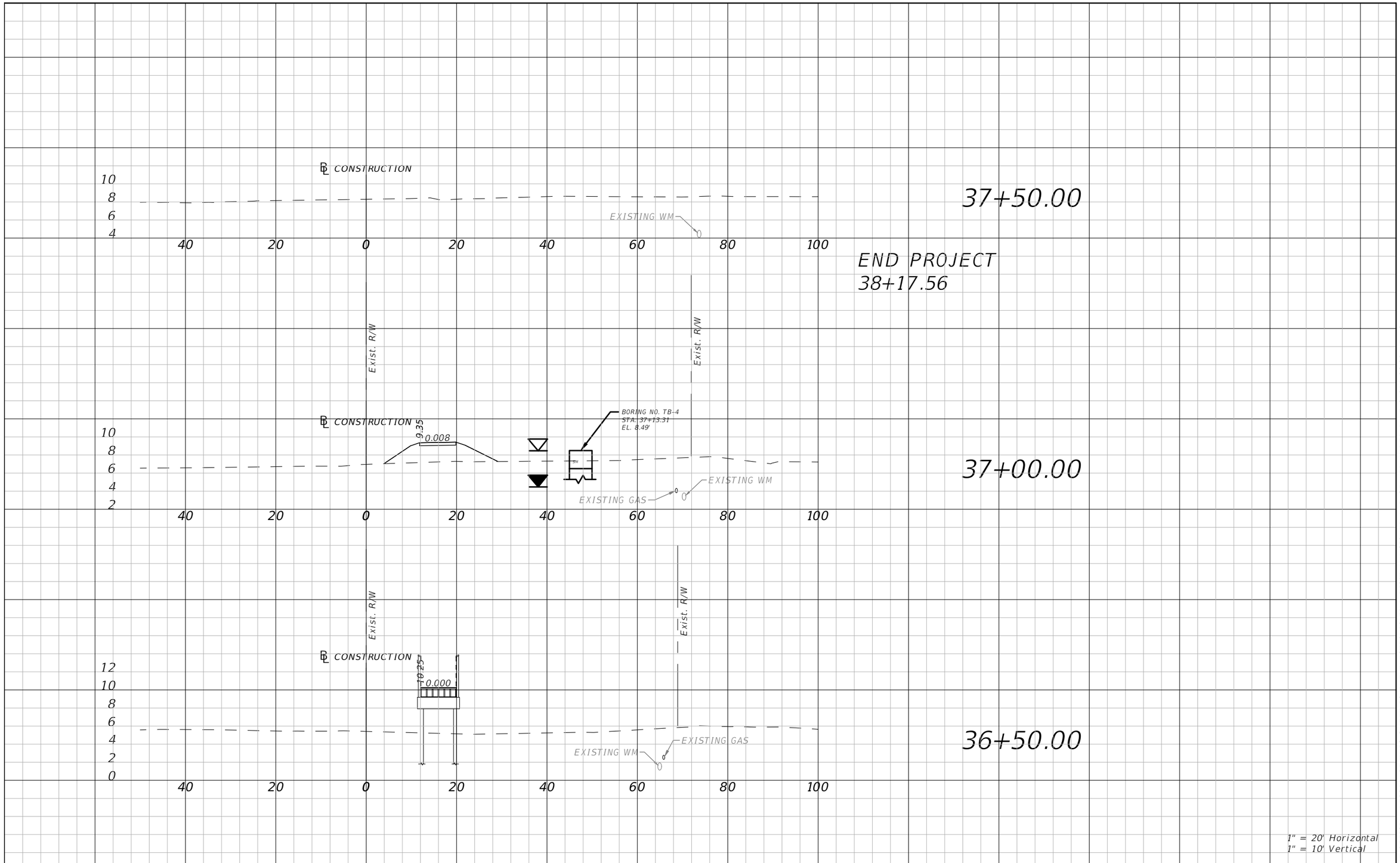

THE OFFICIAL RECORD OF THIS SHEET IS THE ELECTRONIC FILE DIGITALLY SIGNED AND SEALED UNDER RULE 61G15-23.004, F.A.C.

REVISIONS	
DATE	DESCRIPTION

CITY OF PORT ORANGE
1000 CITY CENTER CIRCLE
PORT ORANGE, FL 32129

MERLYNN O. ANDERSON, P.E.
P.E. LICENSE NUMBER 83096

STANLEY CONSULTANTS, INC.
80 SPRING VISTA DRIVE
DEBARY, FL 32713

SJR2C LOOP TRAIL
FROM SOUTH OF SELIN CIR TO HERBERT ST

ROAD	COUNTY	FINANCIAL PROJECT ID
SPRUCE CREEK RD	VOLUSIA	439865-3-54-01

CROSS SECTION

SHEET NO.
40

O'Neill, Karen 5/14/2025 12:36:05 PM 5/14/2025 12:36:05 PM 6:03:06 Projects\10962 (Port Orange)\TWO 09 - SUNTrail (SJR2C Loop) Spruce Creek Rd\CAD\439865\Roadway\RDXSRD01.dwg

1.0 SITE DESCRIPTION:

PROJECT NAME AND LOCATION:

SJR2C LOOP TRAIL (SPRUCE CREEK RD.)
FROM SOUTH OF SELIN CIR TO HERBERT ST

*SEE COVER SHEET FOR LOCATION MAP

PROJECT OWNER AND ADDRESS:

CITY OF PORT ORANGE
1000 CITY CENTER CIRCLE,
PORT ORANGE, FL 32129

1.A. NATURE OF CONSTRUCTION ACTIVITY:

THE PROJECT CONSISTS OF CONSTRUCTING 0.65 MILES OF SHARED USE PATHS, 687 FEET OF BOARDWALK, AND UPGRADES TO EXISTING CURB RAMPS WITH LIMITED DISTURBANCE OF SURROUNDING AREA.

1.B. SEQUENCE OF MAJOR SOIL DISTURBING ACTIVITIES:

FOR EACH CONSTRUCTION PHASE, INSTALL PERIMETER CONTROLS AFTER CLEARING AND GRUBBING AS NECESSARY FOR INSTALLATION OF CONTROLS, BUT BEFORE BEGINNING OTHER WORK FOR THE CONSTRUCTION PHASE. REMOVE PERIMETER CONTROLS ONLY AFTER ALL UPSTREAM AREAS ARE STABILIZED.

1. CLEARING AND GRUBBING
2. EARTHWORK ASSOCIATED WITH THE CONSTRUCTION OF SHARED USE PATHS

1.C. AREA ESTIMATES:

TOTAL AREA TO BE DISTURBED: 1.158 ACRES

1.D. RUNOFF DATA:

SOILS DATA:

THE TYPES OF SOILS ENCOUNTERED ARE CLASSIFIED ACCORDING TO THE NATIONAL RESOURCE CONSERVATION SERVICE SOILS SURVEY FOR VOLUSIA COUNTY AND ARE LISTED IN THE FOLLOWING TABLE:

SOIL NO.	SOIL NAME	HYDROLOGIC GROUP
14	CHOBEE FINE SANDY LOAM	B/D
29	IMMOKALEE SAND,	B/D
60	SMYRNA-SMYRNA, WET FINE SAND, 0 TO 2 PERCENT SLOPES	A/D

OUTFALL INFORMATION:

CONTROL STRUCTURE: (NA)

1.E. SITE MAP:

THE CONSTRUCTION PLANS ARE BEING USED AS THE SITE MAPS.

1.F. RECEIVING WATERS:

HALIFAX RIVER (WBID# 2363A)

2.0 CONTROLS:

1.A. EROSION AND SEDIMENT CONTROLS:

BEST MANAGEMENT PRACTICES (BMPs) AND MEASURES SHALL BE IMPLEMENTED AT THE CONSTRUCTION SITE FOR ALL MAJOR SOIL DISTURBING ACTIVITIES TO CONTROL EROSION AND TURBIDITY CAUSED BY STORMWATER RUNOFF. THE CONTRACTOR IS RESPONSIBLE FOR PLACING AND MAINTAINING THESE CONTROL METHODS AS SHOWN AND AS REQUIRED. AS WORK PROGRESSES, THE CONTRACTOR SHALL MODIFY THE PLAN TO ADAPT TO SEASONAL VARIATIONS, CHANGES IN CONSTRUCTION ACTIVITIES, AND THE NEED FOR BETTER PRACTICES. THE CONTRACTOR SHALL ALSO PROVIDE EROSION PROTECTION AS REQUIRED BY LOCAL, STATE AND FEDERAL LAW.

2.A.1 STABILIZATION PRACTICES:

THE CONTRACTOR SHALL INITIATE ALL STABILIZATION MEASURES AS SOON AS PRACTICAL, BUT IN NO CASE MORE THAN 7 DAYS AFTER CONSTRUCTION ACTIVITIES HAVE TEMPORARILY OR PERMANENTLY CEASED. THE STABILIZATION PRACTICES SHALL INCLUDE AT LEAST THE FOLLOWING, UNLESS OTHERWISE APPROVED BY THE ENGINEER:

TEMPORARY STABILIZATION:
* ARTIFICIAL COVERINGS IN ACCORDANCE WITH SPECIFICATION SECTION 104.
* TURF AND SOD IN ACCORDANCE WITH SPECIFICATION SECTION 104.

PERMANENT STABILIZATION:
* ASPHALT OR CONCRETE SURFACE.
* SOD IN ACCORDANCE WITH SPECIFICATION SECTION 570.

2.A.2 STRUCTURAL PRACTICES:

SEDIMENT CONTROLS SHALL BE IN PLACE BEFORE DISTURBING SOIL UPSTREAM OF THE CONTROL. THE STRUCTURAL PRACTICES SHALL INCLUDE AT LEAST THE FOLLOWING, UNLESS OTHERWISE APPROVED BY THE ENGINEER:

TEMPORARY:
* SEDIMENT BARRIERS IN ACCORDANCE WITH THE CONSTRUCTION DETAILS AND SPECIFICATION SECTION 104, AND FDEP EROSION AND SEDIMENT CONTROL DESIGNER AND REVIEWER MANUAL.
* INLET PROTECTION IN ACCORDANCE WITH FDEP EROSION AND SEDIMENT CONTROL DESIGNER AND REVIEWER MANUAL. INLET PROTECTION DEVICES SHALL BE INSTALLED ON ALL PROPOSED STORM INLETS, AND INSTALLED ON ANY EXISTING STORM INLETS THAT MAY BE IMPACTED WITH SEDIMENT LADEN RUNOFF ORIGINATING FROM THE PROJECT AREA.

PERMANENT:
* STORMATER PONDS.
* SOD.

2.B STORMWATER MANAGEMENT:

UNDER PRESENT CONDITIONS, STORMWATER RUNOFF WITHIN THE MAJORITY OF THE PROJECT CORRIDOR SHEET FLOWS OVERLAND INTO THE HALIFAX CANAL ALONG SPRUCE CREEK ROAD THAT ULTIMATELY DISCHARGES TO THE HALIFAX RIVER. EXISTING DRAINAGE PATTERS ARE MAINTAINED IN PROPOSED CONDITIONS.

2.C. OTHER CONTROLS:

2.C.1 WASTE DISPOSAL:

THE CONTRACTOR SHALL PREVENT THE DISCHARGE OF SOLID MATERIALS, INCLUDING BUILDING MATERIALS, TO THE WATERS OF THE UNITED STATES. THE PROPOSED METHODS SHALL INCLUDE AT LEAST THE FOLLOWING, UNLESS OTHERWISE APPROVED BY THE ENGINEER:

* PROVIDING LITTER CONTROL AND COLLECTION WITHIN THE PROJECT AREA DURING CONSTRUCTION ACTIVITIES.
* DISPOSING OF ALL FERTILIZER OR OTHER CHEMICAL CONTAINERS ACCORDING TO EPA STANDARD PRACTICES AS DETAILED BY THE MANUFACTURER.
* DISPOSING OF SOLID MATERIALS, INCLUDING BUILDING AND CONSTRUCTION MATERIALS, OFF THE PROJECT SITE BUT NOT IN SURFACE WATERS OR WETLANDS, AND IN ACCORDANCE WITH ALL LOCAL AND STATE LAWS. NO WASTE MATERIALS SHALL BE BURIED ON SITE.

2.C.2 OFF-SITE VEHICLE TRACKING & DUST CONTROL:

THE CONTRACTOR SHALL MINIMIZE OFF-SITE VEHICLE TRACKING OF SEDIMENTS AND GENERATING DUST. THE PROPOSED METHODS SHALL INCLUDE AT LEAST THE FOLLOWING, UNLESS OTHERWISE APPROVED BY THE ENGINEER:

* COVERING LOADED HAUL TRUCKS WITH TARPAULINS.
* REMOVING EXCESS DIRE FROM ROADS DAILY.
* STABILIZING CONSTRUCTION ENTRANCES ACCORDING TO THE FDEP EROSION AND SEDIMENT CONTROL DESIGNER AND REVIEWER MANUAL.
* USING ROADWAY SWEEPERS DURING DUST GENERATING ACTIVITIES SUCH AS EXCAVATION AND MILLING OPERATIONS.

2.C.3 STATE AND LOCAL REGULATIONS FOR WASTE DISPOSAL, SANITARY SEWER, OR SEPTIC TANK REGULATIONS:

THE CONTRACTOR SHALL UTILIZE PROCEDURES THAT COMPLY WITH APPLICABLE STATE AND LOCAL REGULATIONS FOR WASTE DISPOSAL, AND SANITARY SEWER OR SEPTIC SYSTEMS AS DESCRIBED IN SPECIFICATION SECTION 104, EROSION CONTROL PLAN.

THE CONTRACTOR SHALL IMPLEMENT SITE SPECIFIC CONTROL MEASURES OR BMPs TO MINIMIZE OR ELIMINATE POLLUTANT DISCHARGES RESULTING FROM DEWATERING OPERATION. THE CONTROL MEASURES OR BMPs MAY INCLUDE THE FOLLOWING, UNLESS OTHERWISE APPROVED BY THE ENGINEER:

* SEDIMENT TRAPS AND BASINS
* DEWATERING TANKS AND FILTERS

2.C.4 FERTILIZERS AND PESTICIDES:

THE CONTRACTOR SHALL APPLY FERTILIZERS AND PESTICIDES IN COMPLIANCE WITH THE PROCEDURES DESCRIBED IN THE APPLICABLE SUBSECTIONS OF SECTION 982 OF THE SPECIFICATIONS.

2.C.5 TOXIC SUBSTANCES:

THE CONTRACTOR SHALL MAINTAIN A LIST OF TOXIC SUBSTANCES THAT ARE LIKELY TO BE USED ON THE JOB AND PROVIDE A PLAN ADDRESSING THE GENERATION, APPLICATION, MIGRATION, STORAGE, AND DISPOSAL OF THESE SUBSTANCES.

3.0 MAINTENANCE:

THE CONTRACTOR SHALL PROVIDE A PLAN FOR MAINTAINING ALL EROSION AND SEDIMENT CONTROLS THROUGHOUT CONSTRUCTION. THE MAINTENANCE PLAN SHALL AT A MINIMUM COMPLY WITH THE FOLLOWING:

* SILT FENCE: MAINTAIN PER SPECIFICATION SECTION 104. THE CONTRACTOR SHOULD ANTICIPATE REPLACING SILT FENCE ON 12 MONTH INTERVALS.
* INLET PROTECTION: REMOVE SEDIMENT PER MANUFACTURER'S RECOMMENDATIONS OR WHEN WATER PONDS IN UNACCEPTABLE AMOUNTS OR AREAS.

4.0 INSPECTIONS:

QUALIFIED PERSONNEL SHALL INSPECT THE FOLLOWING ITEMS AT LEAST ONCE EVERY SEVEN CALENDAR DAYS AND WITHIN 24 HOURS OF THE END OF A STORM THAT IS 0.50 INCHES OR GREATER.

TO COMPLY, THE CONTRACTOR SHALL INSTALL AND MAINTAIN RAIN GAUGES AND RECORD THE DAILY RAINFALL. WHERE SITES HAVE BEEN PERMANENTLY STABILIZED, INSPECTIONS SHALL BE CONDUCTED AT LEAST ONCE EVERY MONTH. THE CONTRACTOR SHALL ALSO INSPECT THAT CONTROLS INSTALLED IN THE FIELD AGREE WITH THE LATEST STORMWATER POLLUTION PREVENTION PLAN.

* POINTS OF DISCHARGE TO WATERS OF THE UNITS STATES.
* POINTS OF DISCHARGE TO MUNICIPAL SEPARATE STORM DRAIN SYSTEMS.
* DISTURBED AREAS OF THE SITE THAT HAVE NOT BEEN FINALLY STABILIZED.
* AREAS USED FOR STORAGE OF MATERIALS THAT ARE EXPOSED TO PRECIPITATION.
* STRUCTURAL CONTROLS
* STORMWATER MANAGEMENT SYSTEMS
* LOCATIONS WHERE VEHICLES ENTER OR EXIT THE SITE

THE CONTRACTOR SHALL INITIATE REPAIRS WITHIN 24 HOURS OF INSPECTIONS THAT INDICATE ITEMS ARE NOT IN GOOD WORKING ORDER.

IF INSPECTION INDICATE THAT INSTALLED STABILIZATION AND STRUCTURAL PRACTICES ARE NOT SUFFICIENT TO MINIMIZE EROSION, RETAIN SEDIMENT, AND PREVENT DISCHARGING POLLUTANTS, THE CONTRACTOR SHALL PROVIDE ADDITIONAL MEASURES, AS APPROVED BY THE ENGINEER.

5.0 NON-STORMWATER DISCHARGES:

THE CONTRACTOR SHALL IDENTIFY ALL ANTICIPATED POTENTIAL NON-STORMWATER DISCHARGES. THE CONTRACTOR SHALL DESCRIBE THE PROPOSED MEASURES TO PREVENT POLLUTION OF THESE NON-STORMWATER DISCHARGES. IF THE CONTRACTOR ENCOUNTERS CONTAMINATED SOIL OR GROUNDWATER, CONTACT THE VOLUSIA COUNTY HAZARDOUS WASTE COORDINATOR,

ALLOWABLE NON-STORMWATER DISCHARGES INCLUDE THE FOLLOWING:

* DISCHARGES FROM FIREFIGHTING ACTIVITIES.
* FIRE HYDRANT FLUSHINGS.
* WATERS WITHOUT DETERGENTS USED TO SPRAY OFF LOOSE SOLIDS FROM VEHICLES.
* WATERS USED TO CONTROL DUST.
* POTABLE WATER SOURCES SUCH AS WATERLINE FLUSHINGS.
* LANDSCAPE IRRIGATION WATER AND DRAINAGE.
* ROUTINE EXTERNAL BUILDING WASHDOWN.
* PAVEMENT WASHWATERS THAT DO NOT CONTAIN DETERGENTS, LEAKS, SPILLS OF TOXIC OR HAZARDOUS MATERIALS.
* AIR CONDITIONING CONDENSATE.
* SPRING WATER.
* FOUNDATION OR FOOTING DRAIN FLOWS.
* NON-CONTAMINATED GROUND WATER ASSOCIATED WITH DEWATERING ACTIVITIES.

PROHIBITED NON-STORMWATER DISCHARGES INCLUDE, BUT ARE NOT LIMITED TO, THE FOLLOWING:

* WASTEWATER FROM CONCRETE WASHOUT
* WASTEWATER FROM WASHOUT OR CLEANOUT OF STUCCO, PAINT, FROM RELEASE OF OILS, CURING COMPOUNDS, AND OTHER CONSTRUCTION MATERIALS.
* FUELS, OILS, OR OTHER POLLUTANTS FROM VEHICLE AND EQUIPMENT OPERATION AND MAINTENANCE.
* SOAPS, DETERGENTS, SOLVENTS, OR OTHER CLEANERS.
* HAZARDOUS SUBSTANCES OR OIL RESULTING FROM AN ON-SITE SPILL.
* SOLID MATERIALS, INCLUDING BUILDING MATERIALS

CONTRACTOR'S AND SUBCONTRACTOR'S CERTIFICATION

I CERTIFY UNDER PENALTY OF LAW THAT I UNDERSTAND, AND SHALL COMPLY WITH, THE TERMS AND CONDITIONS OF THE STATE OF FLORIDA GENERIC PERMIT FOR STORMWATER DISCHARGE FROM LARGE AND SMALL CONSTRUCTION ACTIVITIES AND THIS STORMWATER POLLUTION PREVENTION PLAN.

THE OFFICIAL RECORD OF THIS SHEET IS THE ELECTRONIC FILE DIGITALLY SIGNED AND SEALED UNDER RULE 61G15-23.004, F.A.C.

REVISIONS	
DATE	DESCRIPTION

CITY OF PORT ORANGE
1000 CITY CENTER CIRCLE
PORT ORANGE, FL 32129

MERLYNN O. ANDERSON, P.E.
P.E. LICENSE NUMBER 83096

STANLEY CONSULTANTS, INC.
80 SPRING VISTA DRIVE
DEBARY, FL 32713

SJR2C LOOP TRAIL
FROM SOUTH OF SELIN CIR TO HERBERT ST

ROAD	COUNTY	FINANCIAL PROJECT ID
SPRUCE CREEK RD	VOLUSIA	439865-3-54-01

STORMWATER POLLUTION PREVENTION PLAN NOTES

SHEET NO. 41

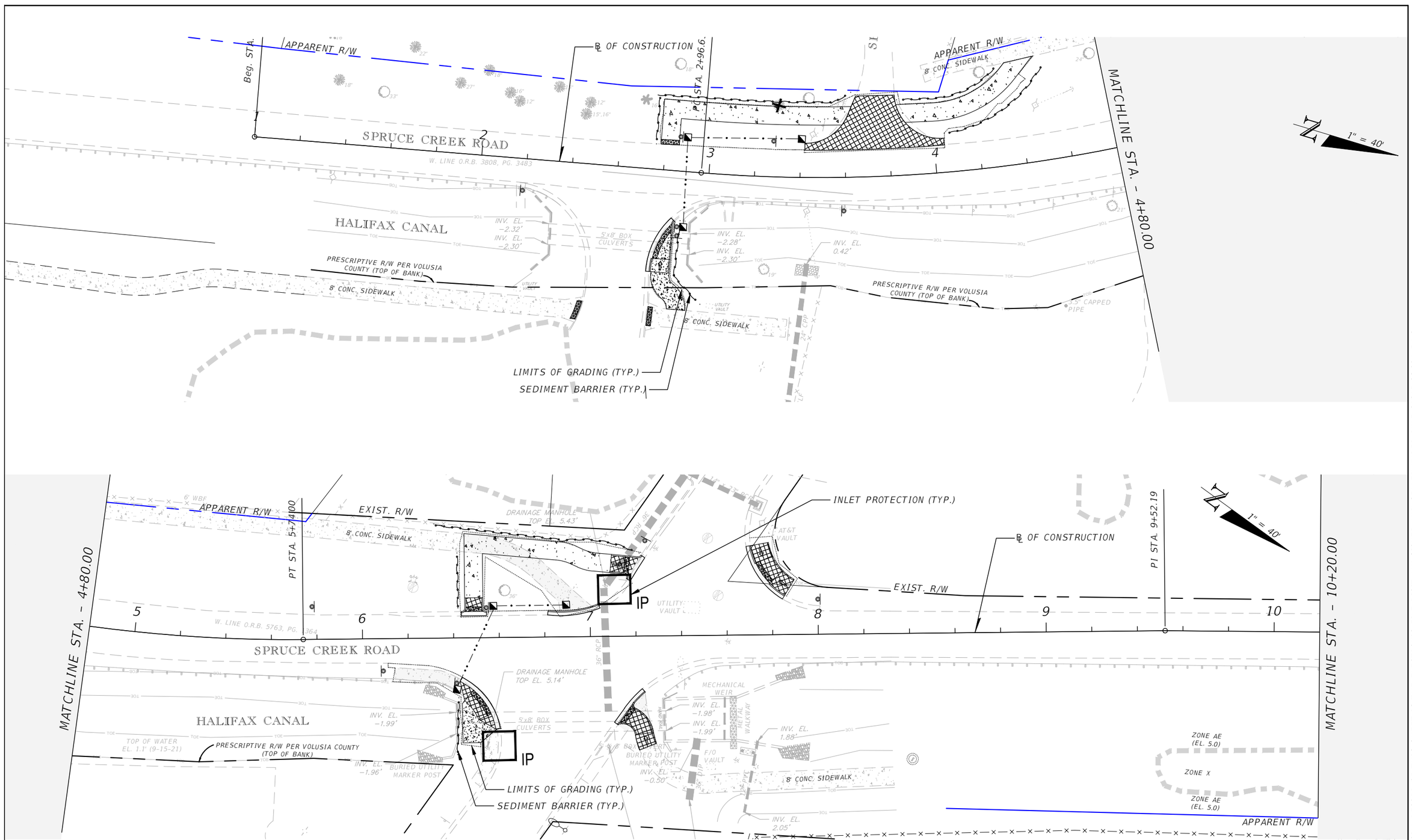

THE OFFICIAL RECORD OF THIS SHEET IS THE ELECTRONIC FILE DIGITALLY SIGNED AND SEALED UNDER RULE 61G15-23.004, F.A.C.

REVISIONS	
DATE	DESCRIPTION

CITY OF PORT ORANGE
1000 CITY CENTER CIRCLE
PORT ORANGE, FL 32129

MERLYNN O. ANDERSON, P.E.
P.E. LICENSE NUMBER 83096

STANLEY CONSULTANTS, INC.
80 SPRING VISTA DRIVE
DEBARY, FL 32713

SJR2C LOOP TRAIL
FROM SOUTH OF SELIN CIR TO HERBERT ST

ROAD	COUNTY	FINANCIAL PROJECT ID
SPRUCE CREEK RD	VOLUSIA	439865-3-54-01

EROSION CONTROL PLAN

SHEET NO. 42

O'Neill, Karen 5/14/2025 12:36:40 PM Z:\2016 Projects\10962 (Port Orange)\TWO 09 - SUNTrail (SJR2C Loop) Spruce Creek Rd\CAD\439865\Roadway\EROSRD01.dwg

LEGEND

EROSION CONTROL SYMBOLS

× TREES TO BE REMOVED

SPRUCE CREEK RD
PARCEL ID: 6304080000120
ALT KEY: 3583957
STATE OF FLORIDA DOT
(O.R.B. 1799, PG. 613)

℄ OF CONSTRUCTION

APPARENT R/W

MATCHLINE STA. - 17+20.00

PI STA. 18+57.99

PI STA. 19+83.22

PI STA. 22+04.09

SPRUCE CREEK ROAD

FLOATING TURBIDITY BARRIER (TYP.)

S-102

S-101

SEDIMENT BARRIER (TYP.)

LIMITS OF GRADING (TYP.)

EXIST. R/W

1" = 40'

DRAINAGE MANHOLE TOP EL. 5.79'

DRAINAGE MANHOLE TOP EL. 5.64'

DRAINAGE MANHOLE TOP EL. 5.55'

DRAINAGE MANHOLE TOP EL. 5.14' INV. EL.

DRAINAGE MANHOLE TOP EL. 4.60' INV. EL.

DRAINAGE MANHOLE TOP EL. 6.78'

CATCH BASIN TOP EL. 4.88'

CATCH BASIN TOP EL. 4.95'

INV. EL. 1.56'

INV. EL. 1.53'

INV. EL. 1.81'

INV. EL. 2.18'

INV. EL. -1.59'

INV. EL. -1.75'

18" RCP

15" RCP

5'x8' BOX CULVERT

PEDESTRIAN CROSSING SIGNAL

FIBER OPTIC VAULT

UTILITY VAULT

FIBER OPTIC MARKER POST

BURIED GAS LINE MARKER POST

8' CONC. SIDEWALK

ZONE X

ZONE AE (EL. 6.0)

ZONE AE (EL. 5.0)

BFOC (D)

18

19

20

21

22

MATCHLINE STA. - 22+60.00

PI STA. 24+57.

PI STA. 27+

SPRUCE CREEK ROAD

FLOATING TURBIDITY BARRIER (TYP.)

S-104

S-103

S-105

S-106

SEDIMENT BARRIER (TYP.)

LIMITS OF GRADING (TYP.)

EXIST. R/W

1" = 40'

CATCH BASIN TOP EL. 5.03' INV. EL.

CATCH BASIN TOP EL. 5.34' INV. EL. 3.07'

CATCH BASIN TOP EL. 5.56' INV. EL. -1.48'

INV. EL. 2.54'

INV. EL. 2.01'

INV. EL. -1.40'

INV. EL. 2.71'

INV. EL. 2.75'

INV. EL. 1.57'

12" RCP

18" RCP

60" RCP

DRIVEWAY

BURIED FIBER OPTIC LINE MARKER POST

UNK INV

TBM 1383
EL. 5.215'
SET IRC
TRAV PT LB 7808

23

24

25

26

27

28

PI STA. 27+6

THE OFFICIAL RECORD OF THIS SHEET IS THE ELECTRONIC FILE DIGITALLY SIGNED AND SEALED UNDER RULE 61G15-23.004, F.A.C.

REVISIONS	
DATE	DESCRIPTION

CITY OF PORT ORANGE
1000 CITY CENTER CIRCLE
PORT ORANGE, FL 32129

MERLYNN O. ANDERSON, P.E.
P.E. LICENSE NUMBER 83096

STANLEY CONSULTANTS, INC.
80 SPRING VISTA DRIVE
DEBARY, FL 32713

SJR2C LOOP TRAIL
FROM SOUTH OF SELIN CIR TO HERBERT ST

ROAD	COUNTY	FINANCIAL PROJECT ID
SPRUCE CREEK RD	VOLUSIA	439865-3-54-01

EROSION CONTROL PLAN

SHEET NO. 43

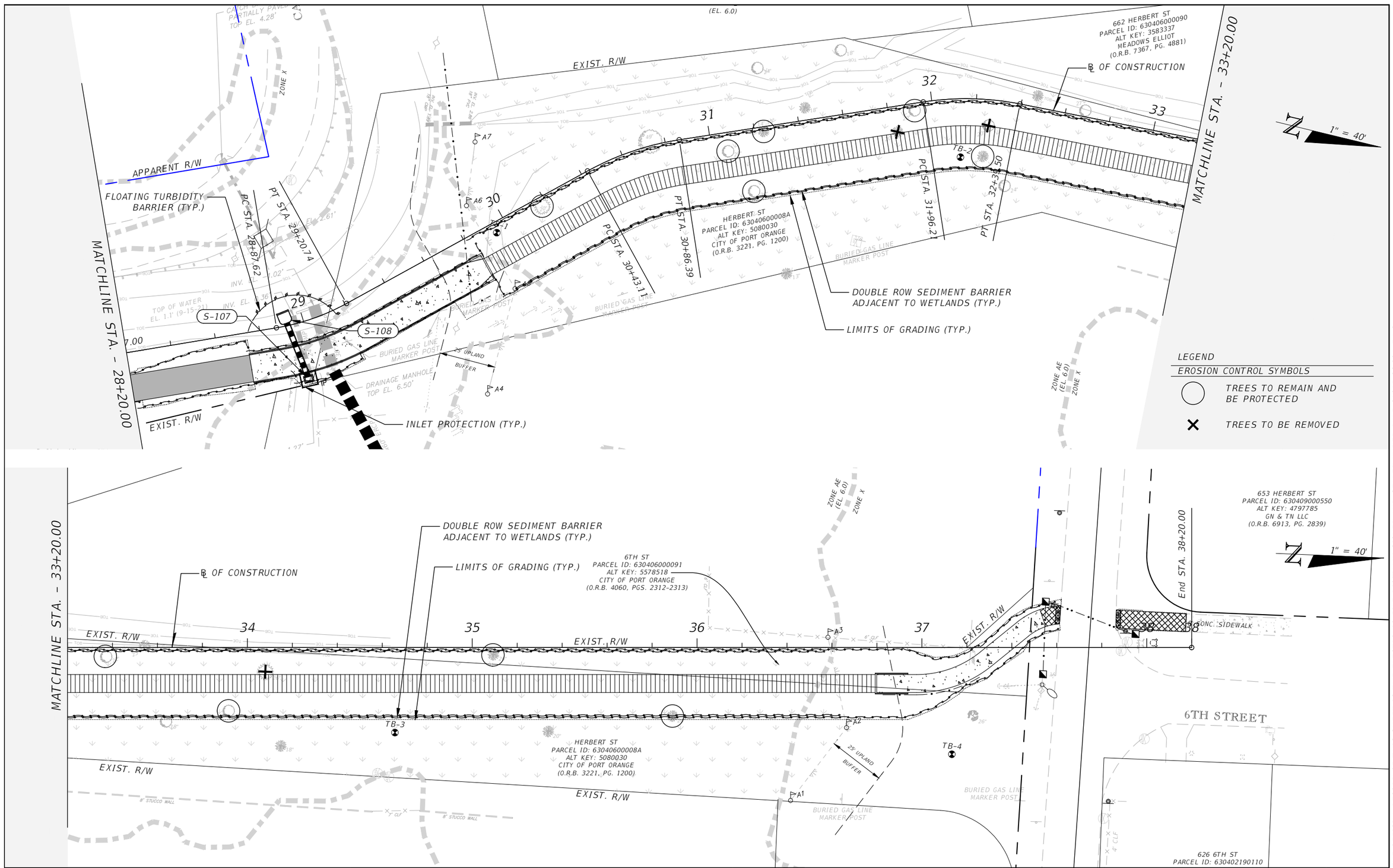

THE OFFICIAL RECORD OF THIS SHEET IS THE ELECTRONIC FILE DIGITALLY SIGNED AND SEALED UNDER RULE 61G15-23.004, F.A.C.

REVISIONS	
DATE	DESCRIPTION

CITY OF PORT ORANGE
1000 CITY CENTER CIRCLE
PORT ORANGE, FL 32129

MERLYNN O. ANDERSON, P.E.
P.E. LICENSE NUMBER 83096

STANLEY CONSULTANTS, INC.
80 SPRING VISTA DRIVE
DEBARY, FL 32713

SJR2C LOOP TRAIL
FROM SOUTH OF SELIN CIR TO HERBERT ST

ROAD	COUNTY	FINANCIAL PROJECT ID
SPRUCE CREEK RD	VOLUSIA	439865-3-54-01

EROSION CONTROL PLAN

SHEET NO. 44

O'Neill, Karen 5/14/2025 12:36:56 PM Z:\2016 Projects\10962 (Port Orange)\TWO 09 - SUNTrail (SJR2C Loop) Spruce Creek Rd\CAD\439865\Roadway\EROSRD01.dwg

PARCEL ID: 633701280012
ALT KEY: 6334447
CITY OF PORT ORANGE
(O.R.B. 5399, PGS. 1067-1077)

725 DUNLAWTON AVE
PARCEL ID: 633701280010
ALT KEY: 3679873
UNITED STATES POSTAL SERVICE
(O.R.B. 2555, PG. 1998)

1" = 40'
0 10 40
Feet

CURVE DATA ℄ CONSTRUCTION (C2)
PI STA. = 21+10.92
DELTA = 10° 42' 28"
D = 5° 43' 46"
T = 93.72
L = 186.89
R = 1000.00
PC STA. = 20+17.20
PT STA. = 22+04.09

MATCHLINE STA. - 17+20.00

MATCHLINE STA. - 22+60.00

DUNLAWTON AVENUE (CR 421)

SAMMS AVENUE

SPRUCE CREEK ROAD

SPRUCE CREEK RD
PARCEL ID: 630408000120
ALT KEY: 3583957
STATE OF FLORIDA DOT
(O.R.B. 1799, PG. 613)

℄ OF CONSTRUCTION

APPARENT R/W

EXIST. R/W

PI STA. 18+57.99

PI STA. 19+83.22

PC STA. 20+17.20

PT STA. 22+04.09

N 35° 32' 37" W

N 35° 59' 50" W

N 35° 21' 02" W

N 24° 38' 34" W

18 19 20 21 22

DRAINAGE MANHOLE
TOP EL. 5.79'

DRAINAGE MANHOLE
TOP EL. 5.64'

DRAINAGE MANHOLE
TOP EL. 5.55'

DRAINAGE MANHOLE
TOP EL. 5.14'
INV. EL. 1.56'

DRAINAGE MANHOLE
TOP EL. 4.60'
INV. EL. 1.53'

DRAINAGE MANHOLE
TOP EL. 5.78'

CATCH BASIN
TOP EL. 4.88'

CATCH BASIN
TOP EL. 4.95'

CATCH BASIN
TOP EL. 5.70'

DRAINAGE MANHOLE
TOP EL. 5.53'

INV. EL. -1.75

INV. EL. -1.59'

INV. EL. 2.18'

INV. EL. 1.81'

PEDESTRIAN CROSSING SIGNAL

UTILITY VAULT

FIBER OPTIC VAULT

FIBER OPTIC MARKER POST

BURIED GAS LINE MARKER POST

5'x8' BOX CULVERT

18" RCP

15" RCP

12" RCP

12" DIP FM

8" PVC REUSE

6" STEEL GAS MAIN

5' CONC. SIDEWALK

ZONE X

ZONE AE (EL. 6.0)

ZONE AE (EL. 5.0)

S-102

S-101

C2

SURFACE WATER IMPACTS
A = 150 SF (0.003 AC)

LEGEND

PLAN SYMBOLS

SURFACE WATER IMPACTS

SPRUCE CREEK RD
PARCEL ID: 630407001820
ALT KEY: 4261231
CITY OF PORT ORANGE
(O.R.B. 5236, PG. 1068)

638 POWERS AVE
PARCEL ID: 630407001690
ALT KEY: 3583761
FLORIDA POWER & LIGHT COMPANY
(M.B. 10, PG. 138)

THE OFFICIAL RECORD OF THIS SHEET IS THE ELECTRONIC FILE DIGITALLY SIGNED AND SEALED UNDER RULE 61G15-23.004, F.A.C.

REVISIONS	
DATE	DESCRIPTION

CITY OF PORT ORANGE
1000 CITY CENTER CIRCLE
PORT ORANGE, FL 32129

MERLYNN O. ANDERSON, P.E.
P.E. LICENSE NUMBER 83096

STANLEY CONSULTANTS, INC.
80 SPRING VISTA DRIVE
DEBARY, FL 32713

SJR2C LOOP TRAIL
FROM SOUTH OF SELIN CIR TO HERBERT ST

ROAD	COUNTY	FINANCIAL PROJECT ID
SPRUCE CREEK RD	VOLUSIA	439865-3-54-01

WETLAND IMPACTS

SHEET NO. 45

703 SAMMS AVE
PARCEL ID: 633701210021
ALT KEY: 3679024
PORT ORANGE INDUSTRIAL LLC
(O.R.B. 3334, PG. 1289)

SPRUCE CREEK RD
PARCEL ID: 633701210022
ALT KEY: 3679032
ATTN PROPERTY TAX DEPT

3000 SPRUCE CREEK RD
PARCEL ID: 633701210020
ALT KEY: 3679016
FLORIDA POWER & LIGHT COMPANY
(O.R.B. 2277, PG. 119)

1" = 40'

0 10 40
Feet

MATCHLINE STA. - 22+60.00

MATCHLINE STA. - 28+20.00

SURFACE WATER IMPACTS
A = 189 SF (0.004 AC)

℄ OF CONSTRUCTION

ZONE X
ZONE AE (EL. 6.0)

PI STA. 24+57.87

PI STA. 27+20.00

CATCH BASIN
TOP EL. 5.03'
INV. EL.

SANITARY MANHOLE
TOP EL. 5.46'
INV. EL.

CATCH BASIN
TOP EL. 5.34'
INV. EL. 3.07'

INV. EL. 2.75'

6" STEEL GAS MAIN

APPARENT R/W

VAULT

INV. EL. 2.54'

8" RCP

12" RCP

8" CMP

23 24 25 26 27 28

N 24° 38' 34" W

N 23° 04' 01" W

N 66° 55' 59" E

SPRUCE CREEK ROAD

CATCH BASIN
TOP EL. 5.56'
INV. EL. -1.48'

4" DIP (MAYBE FIBER OPTIC)

INV. EL. 2.01'

INV. EL. 1.57'

INV. EL. -1.40'

60" RCP

S-104

S-105

S-106

S-103

BURIED GAS LINE MARKER POST

GRAVEL DRIVEWAY

EXIST. R/W

TBM 1383
EL. 5.215'
SET IRC
TRAV PT LB 7808

BURIED FIBER OPTIC LINE MARKER POST

UNK INV

INV. EL. 2.71'

SANITARY MANHOLE
TOP EL. 5.41'
INV. EL.

SURFACE WATER IMPACTS
A = 132 SF (0.003 AC)

SURFACE WATER IMPACTS
A = 160 SF (0.004 AC)

SURFACE WATER IMPACTS
A = 417 SF (0.010 AC)

SURFACE WATER IMPACTS
A = 1,005 SF (0.023 AC)

POWERS AVENUE

638 POWERS AVE
PARCEL ID: 630407001690
ALT KEY: 3583761
FLORIDA POWER & LIGHT COMPANY
(M.B. 10, PG. 138)

639 POWERS AVE
PARCEL ID: 630407001670
ALT KEY: 3583752
GRUBBS FREDA L TR
(O.R.B. 5743, PG. 1494)

LEGEND

PLAN SYMBOLS

SURFACE WATER IMPACTS

THE OFFICIAL RECORD OF THIS SHEET IS THE ELECTRONIC FILE DIGITALLY SIGNED AND SEALED UNDER RULE 61G15-23.004, F.A.C.

REVISIONS	
DATE	DESCRIPTION

CITY OF PORT ORANGE
1000 CITY CENTER CIRCLE
PORT ORANGE, FL 32129

MERLYNN O. ANDERSON, P.E.
P.E. LICENSE NUMBER 83096

STANLEY CONSULTANTS, INC.
80 SPRING VISTA DRIVE
DEBARY, FL 32713

SJR2C LOOP TRAIL
FROM SOUTH OF SELIN CIR TO HERBERT ST

ROAD	COUNTY	FINANCIAL PROJECT ID
SPRUCE CREEK RD	VOLUSIA	439865-3-54-01

WETLAND IMPACTS

SHEET NO. 46

O'Neill, Karen 5/14/2025 12:37:49 PM Z:\2016 Projects\10962 (Port Orange)\TW0 09 - SUNTrail (SJR2C Loop) Spruce Creek Rd\CAD\439865\Roadway\WETLAND IMPACTS.dwg

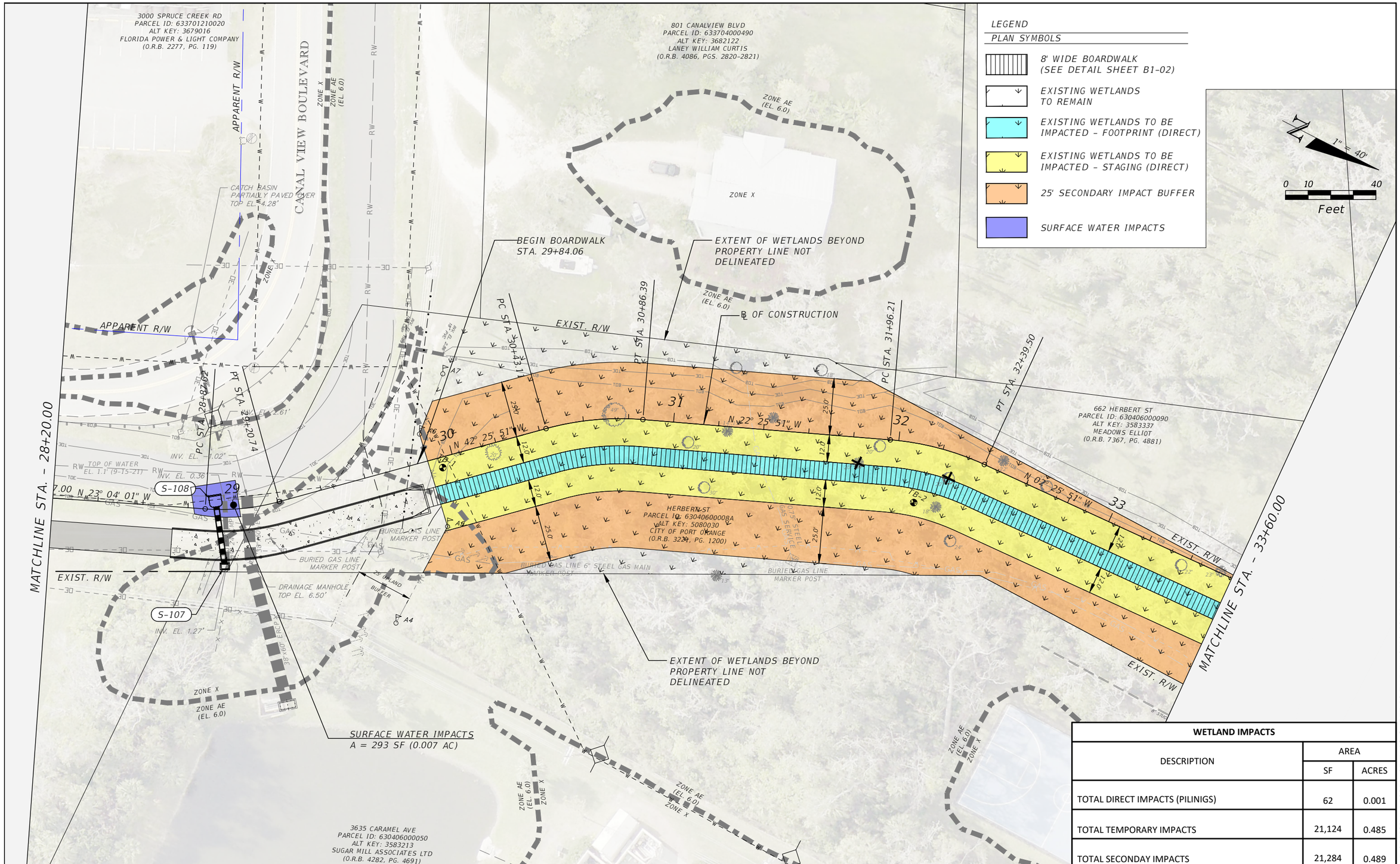

WETLAND IMPACTS		
DESCRIPTION	AREA	
	SF	ACRES
TOTAL DIRECT IMPACTS (PILINIGS)	62	0.001
TOTAL TEMPORARY IMPACTS	21,124	0.485
TOTAL SECONDAY IMPACTS	21,284	0.489

THE OFFICIAL RECORD OF THIS SHEET IS THE ELECTRONIC FILE DIGITALLY SIGNED AND SEALED UNDER RULE 61G15-23.004, F.A.C.

REVISIONS	
DATE	DESCRIPTION

CITY OF PORT ORANGE
1000 CITY CENTER CIRCLE
PORT ORANGE, FL 32129

MERLYNN O. ANDERSON, P.E.
P.E. LICENSE NUMBER 83096

STANLEY CONSULTANTS, INC.
80 SPRING VISTA DRIVE
DEBARY, FL 32713

SJR2C LOOP TRAIL
FROM SOUTH OF SELIN CIR TO HERBERT ST

ROAD	COUNTY	FINANCIAL PROJECT ID
SPRUCE CREEK RD	VOLUSIA	439865-3-54-01

WETLAND IMPACTS

SHEET NO. 47

O'Neill, Karen 5/14/2025 12:38:04 PM Z:\2016 Projects\10962 (Port Orange)\TWO 09 - SUNTrail (SJR2C Loop) Spruce Creek Rd\CAD\439865\Roadway\WETLAND IMPACTS.dwg

LEGEND

PLAN SYMBOLS

8' WIDE BOARDWALK (SEE DETAIL SHEET B1-02)

EXISTING WETLANDS TO REMAIN

EXISTING WETLANDS TO BE IMPACTED - FOOTPRINT (DIRECT)

EXISTING WETLANDS TO BE IMPACTED - STAGING (DIRECT)

25' SECONDARY IMPACT BUFFER

MATCHLINE STA. - 33+60.00

662 HERBERT ST
PARCEL ID: 630406000090
ALT KEY: 3583337
MEADOWS ELLIOT
(O.R.B. 7367, PG. 4881)

EXTENT OF WETLANDS BEYOND PROPERTY LINE NOT DELINEATED

℄ OF CONSTRUCTION

6TH ST
PARCEL ID: 630406000091
ALT KEY: 5578518
CITY OF PORT ORANGE
(O.R.B. 4060, PGS. 2312-2313)

END BOARDWALK
STA. 36+79.20

ZONE AE (EL. 6.0)

ZONE X

STA. 37+74.25 ℄ CONSTRUCTION =
STA. 4+89.39 ℄ HERBERT ST.

APPARENT R/W

HERBERT STREET

EXIST. R/W

SANITARY MANHOLE
TOP EL. 8.70'

℄ OF SIXTH ST.

8' CONC. SIDEWALK

34 35 36 37 38

N 02° 25' 51"W

EXIST. R/W

120'

120'

250'

TB-3

TB-4

A1

A2

A3

25' UPLAND BUFFER

HERBERT ST
PARCEL ID: 630406000008A
ALT KEY: 5080030
CITY OF PORT ORANGE
(O.R.B. 3221, PG. 1200)

EXIST. R/W

BURIED GAS LINE MARKER POST

BURIED GAS LINE MARKER POST

8' STUCCO WALL

6' CLF

EXTENT OF WETLANDS BEYOND PROPERTY LINE NOT DELINEATED

3635 CARAMEL AVE
PARCEL ID: 630406000050
ALT KEY: 3583213
SUGAR MILL ASSOCIATES LTD
(O.R.B. 4282, PG. 4691)

ZONE AE (EL. 6.0)

ZONE X

654 HERBERT ST
PARCEL ID: 630406000080
ALT KEY: 3583329
KEPPER EILEEN A
(O.R.B. 4849, PGS. 2487-2488)

APPARENT R/W

657 HERBERT ST
PARCEL ID: 630409000530
ALT KEY: 4797769
FRAZIER SHAWN FRAIZER JARED
(O.R.B. 3394, PG. 166)

655 HERBERT ST
PARCEL ID: 630409000540
ALT KEY: 4797777
GN & TN LLC
(O.R.B. 6611, PG. 3648)

653 HERBERT ST
PARCEL ID: 630409000550
ALT KEY: 4797785
GN & TN LLC
(O.R.B. 6913, PG. 2839)

6TH STREET

STA. 5+11.76 ℄ HERBERT ST. =
STA. 10+00.00 ℄ SIXTH ST.

626 6TH ST
PARCEL ID: 630402190110
ALT KEY: 3582683
GENSLER BRENDA A
(O.R.B. 7575, PG. 2143)

4' CLF

8' STUCCO WALL

1" = 40'

0 10 40

Feet

WETLAND IMPACTS

DESCRIPTION	AREA	
	SF	ACRES
TOTAL DIRECT IMPACTS (PILINGS)	62	0.001
TOTAL TEMPORARY IMPACTS	21,124	0.485
TOTAL SECONDAY IMPACTS	21,284	0.489

THE OFFICIAL RECORD OF THIS SHEET IS THE ELECTRONIC FILE DIGITALLY SIGNED AND SEALED UNDER RULE 61G15-23.004, F.A.C.

REVISIONS

DATE	DESCRIPTION

CITY OF PORT ORANGE
1000 CITY CENTER CIRCLE
PORT ORANGE, FL 32129

MERLYNN O. ANDERSON, P.E.
P.E. LICENSE NUMBER 83096

STANLEY CONSULTANTS, INC.
80 SPRING VISTA DRIVE
DEBARY, FL 32713

SJR2C LOOP TRAIL
FROM SOUTH OF SELIN CIR TO HERBERT ST

ROAD	COUNTY	FINANCIAL PROJECT ID
SPRUCE CREEK RD	VOLUSIA	439865-3-54-01

WETLAND IMPACTS

SHEET NO. 48

NOTE:
W11-02 SIGNS REQUIRE
PEDESTRIAN IMAGES TO FACE
DIRECTION OF CROSSWALK

POWER SERVICE LOCATION
5 LF 630-2-11
30 LF 630-2-14
1 EA 639-1-112
95 LF 639-2-1
1 EA 641-2-12

W11-02
(2) 30" X 30"
W16-07PL
24" X 12"
W16-07PR
24" X 12"
FTP-68C-21
9" X 18"
654-2-12 1 AS
STA. 2+87

D3-1
24" X 8"
W14-1A
36" X 8"
700-1-111 1 AS
700-1-600 1 AS

R01-05BL
36" X 36"
700-1-111 1 AS
STA. 3+28

℄ OF CONSTRUCTION

APPARENT R/W

BEGIN SIGNING AND
PAVEMENT MARKINGS
STA. 2+19.00

24" WHITE
PREFORMED (TYP.)

12" WHITE@
9.0' C/C

Beg. STA. 1+00.00

SPRUCE CREEK ROAD

N 12° 10' 41" W

W. LINE O.R.B. 3808, PG. 3

24" WHITE

+19.00

HALIFAX CANAL

PRESCRIPTIVE R/W PER VOLUSIA
COUNTY (TOP OF BANK)

8' CONC. SIDEWALK

250' TO ADVANCED PEDESTRIAN TRAFFIC WARNING SIGN

AHEAD

W11-02
30" X 30"
W16-09P
24" X 12"
700-1-111 1 AS

R01-05BL
36" X 36"
700-1-111 1 AS
STA. 2+19

REMOVE EXISTING PAVEMENT MARKINGS
WITHIN INTERSECTION BY GRINDING

STOP

R01-01
30" X 30"
700-1-111 1 AS
700-1-600 1 AS
STA. 2+88

W11-02
(2) 30" X 30"
W16-07PL
24" X 12"
W16-07PR
24" X 12"
FTP-68C-21
9" X 18"
654-2-12 1 AS
STA. 2+88

PC STA. 2+96.63

+28.00

24" WHITE

C1

630-2-11 50 LF
630-2-12 40 LF
635-2-11 3 EA

SELIN CIR

DEAD END

SELIN CIRCLE (DIRT ROAD)

END PUBLIC
MAINTENANCE

APPARENT R/W

MATCHLINE STA. - 4+80.00

PRESCRIPTIVE R/W PER VOLUSIA
COUNTY (TOP OF BANK)

35" CAPPED
PIPE

AHEAD

W11-02
30" X 30"
W16-09P
24" X 12"
700-1-111 1 AS
STA. 3+59

N

1" = 40'

THE OFFICIAL RECORD OF THIS SHEET IS THE ELECTRONIC FILE DIGITALLY SIGNED AND SEALED UNDER RULE 61G15-23.004, F.A.C.

REVISIONS	
DATE	DESCRIPTION

CITY OF PORT ORANGE
1000 CITY CENTER CIRCLE
PORT ORANGE, FL 32129

MERLYNN O. ANDERSON, P.E.
P.E. LICENSE NUMBER 83096

STANLEY CONSULTANTS, INC.
80 SPRING VISTA DRIVE
DEBARY, FL 32713

SJR2C LOOP TRAIL
FROM SOUTH OF SELIN CIR TO HERBERT ST

ROAD	COUNTY	FINANCIAL PROJECT ID
SPRUCE CREEK RD	VOLUSIA	439865-3-54-01

SIGNING AND PAVEMENT MARKING PLAN

SHEET NO. 49

O'Neill, Karen 5/14/2025 12:38:46 PM Z:\2016 Projects\10962 (Port Orange)\TWO 09 - SUNTrail (SJR2C Loop) Spruce Creek Rd\CAD\439865\Signing\PLANSP01.dwg

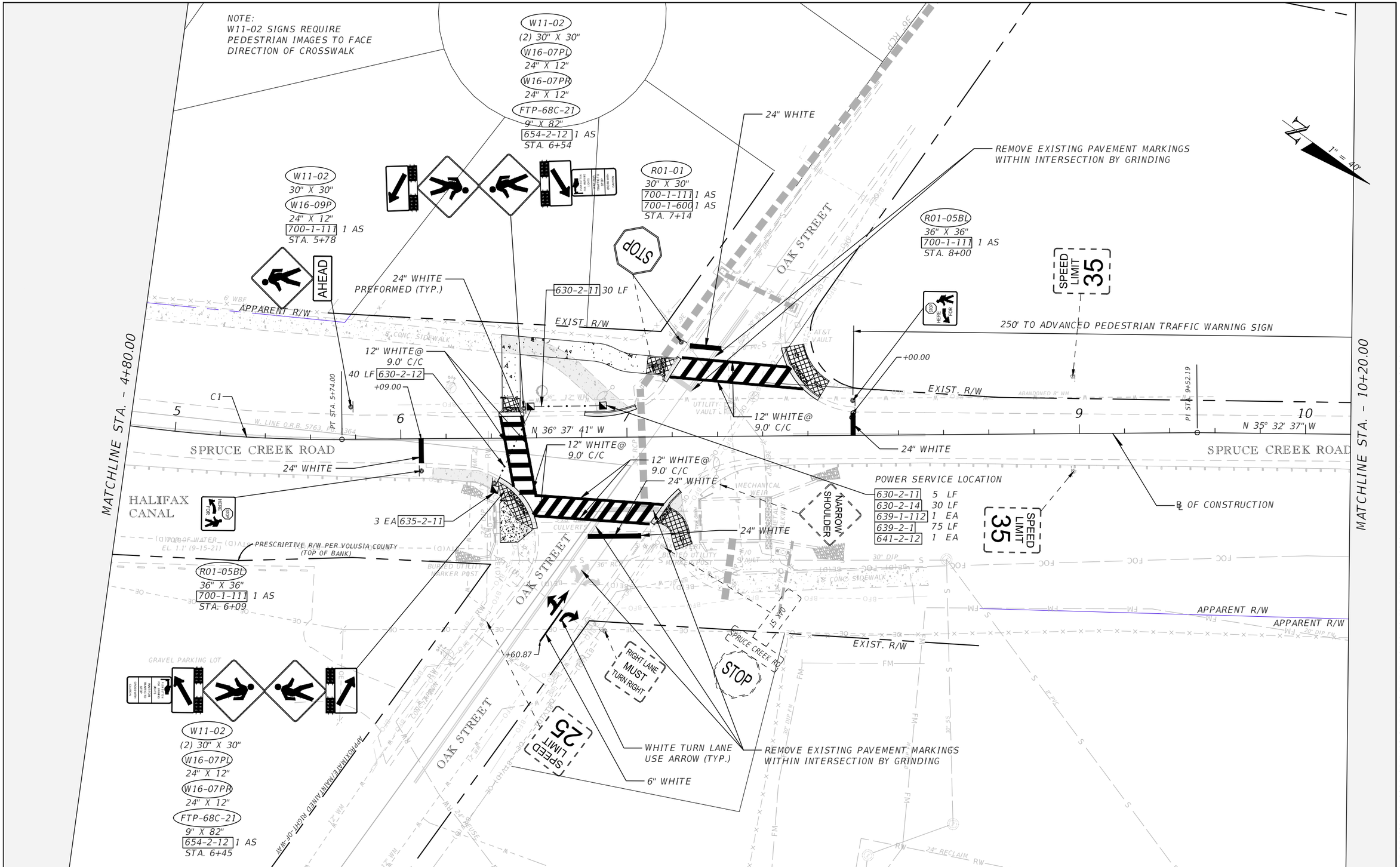

THE OFFICIAL RECORD OF THIS SHEET IS THE ELECTRONIC FILE DIGITALLY SIGNED AND SEALED UNDER RULE 61G15-23.004, F.A.C.

REVISIONS	
DATE	DESCRIPTION

CITY OF PORT ORANGE
1000 CITY CENTER CIRCLE
PORT ORANGE, FL 32129

MERLYNN O. ANDERSON, P.E.
P.E. LICENSE NUMBER 83096

STANLEY CONSULTANTS, INC.
80 SPRING VISTA DRIVE
DEBARY, FL 32713

SJR2C LOOP TRAIL
FROM SOUTH OF SELIN CIR TO HERBERT ST

ROAD	COUNTY	FINANCIAL PROJECT ID
SPRUCE CREEK RD	VOLUSIA	439865-3-54-01

SIGNING AND PAVEMENT MARKING PLAN

SHEET NO.
50

O'Neill, Karen 5/14/2025 12:38:49 PM Z:\2016 Projects\10962 (Port Orange)\TWO 09 - SUNTrail (SJR2C Loop) Spruce Creek Rd\CAD\439865\Signing\PLANSP01.dwg

250' TO ADVANCED PEDESTRIAN TRAFFIC WARNING SIGN

W11-02
30" X 30"
W16-09P
24" X 12"
700-1-111 1 AS
STA. 10+50

AHEAD

APPARENT R/W

11 12 13 14 15

SPRUCE CREEK ROAD

℄ OF CONSTRUCTION

EXIST. R/W

MATCHLINE STA. - 10+20.00

MATCHLINE STA. - 15+60.00

1" = 40'

THE OFFICIAL RECORD OF THIS SHEET IS THE ELECTRONIC FILE DIGITALLY SIGNED AND SEALED UNDER RULE 61G15-23.004, F.A.C.

REVISIONS	
DATE	DESCRIPTION

CITY OF PORT ORANGE
1000 CITY CENTER CIRCLE
PORT ORANGE, FL 32129

MERLYNN O. ANDERSON, P.E.
P.E. LICENSE NUMBER 83096

STANLEY CONSULTANTS, INC.
80 SPRING VISTA DRIVE
DEBARY, FL 32713

SJR2C LOOP TRAIL
FROM SOUTH OF SELIN CIR TO HERBERT ST

ROAD	COUNTY	FINANCIAL PROJECT ID
SPRUCE CREEK RD	VOLUSIA	439865-3-54-01

SIGNING AND PAVEMENT MARKING PLAN

SHEET NO. 51

O'Neill, Karen 5/14/2025 12:38:54 PM Z:\2016 Projects\10962 (Port Orange)\TWO 09 - SUNTrail (SJR2C Loop) Spruce Creek Rd\CAD\439865\Signing\PLANSP01.dwg

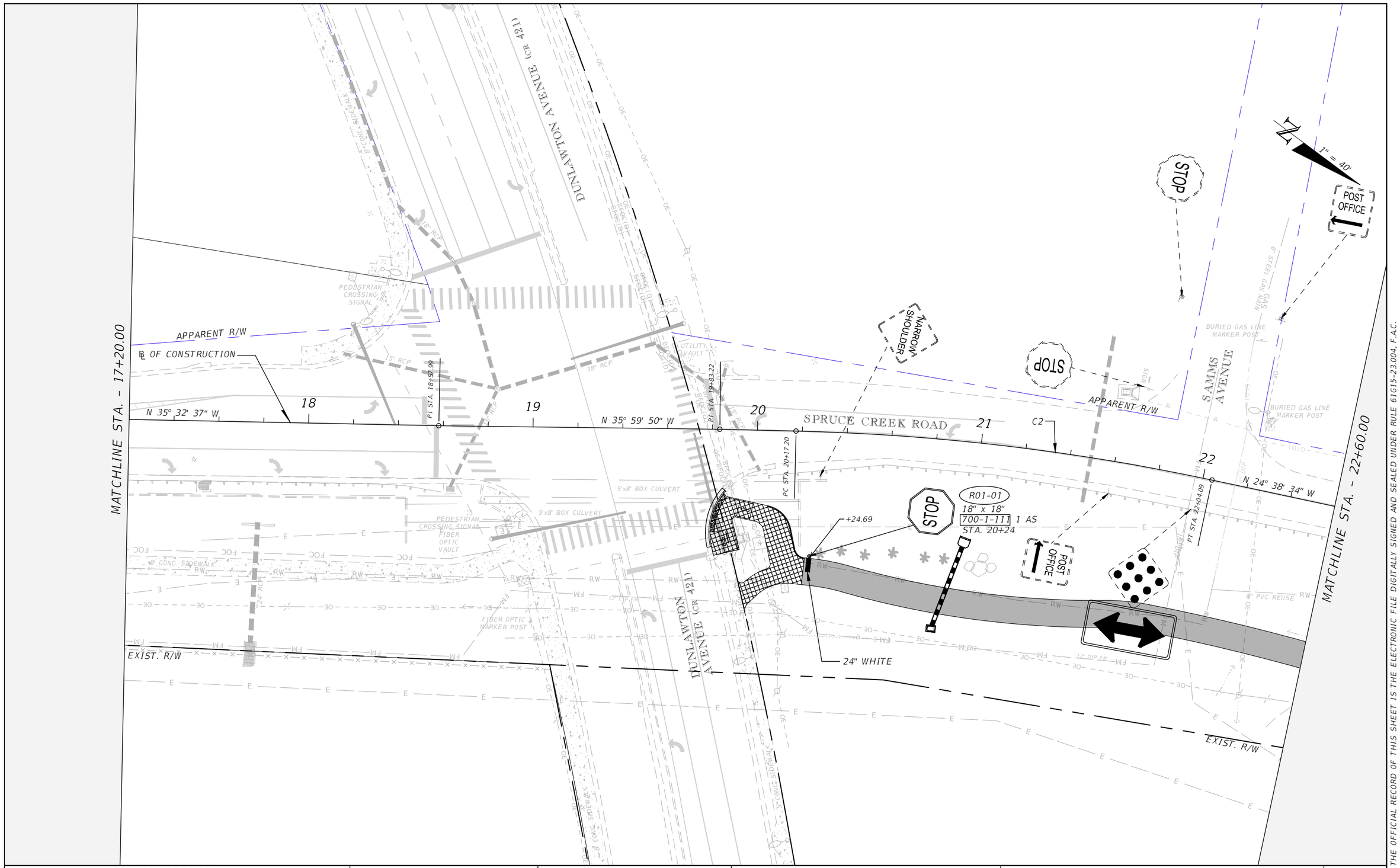

REVISIONS	
DATE	DESCRIPTION

CITY OF PORT ORANGE
1000 CITY CENTER CIRCLE
PORT ORANGE, FL 32129

MERLYNN O. ANDERSON, P.E.
P.E. LICENSE NUMBER 83096

STANLEY CONSULTANTS, INC.
80 SPRING VISTA DRIVE
DEBARY, FL 32713

SJR2C LOOP TRAIL
FROM SOUTH OF SELIN CIR TO HERBERT ST

ROAD	COUNTY	FINANCIAL PROJECT ID
SPRUCE CREEK RD	VOLUSIA	439865-3-54-01

SIGNING AND PAVEMENT MARKING PLAN

SHEET NO. 52

THE OFFICIAL RECORD OF THIS SHEET IS THE ELECTRONIC FILE DIGITALLY SIGNED AND SEALED UNDER RULE 61G15-23.004, F.A.C.

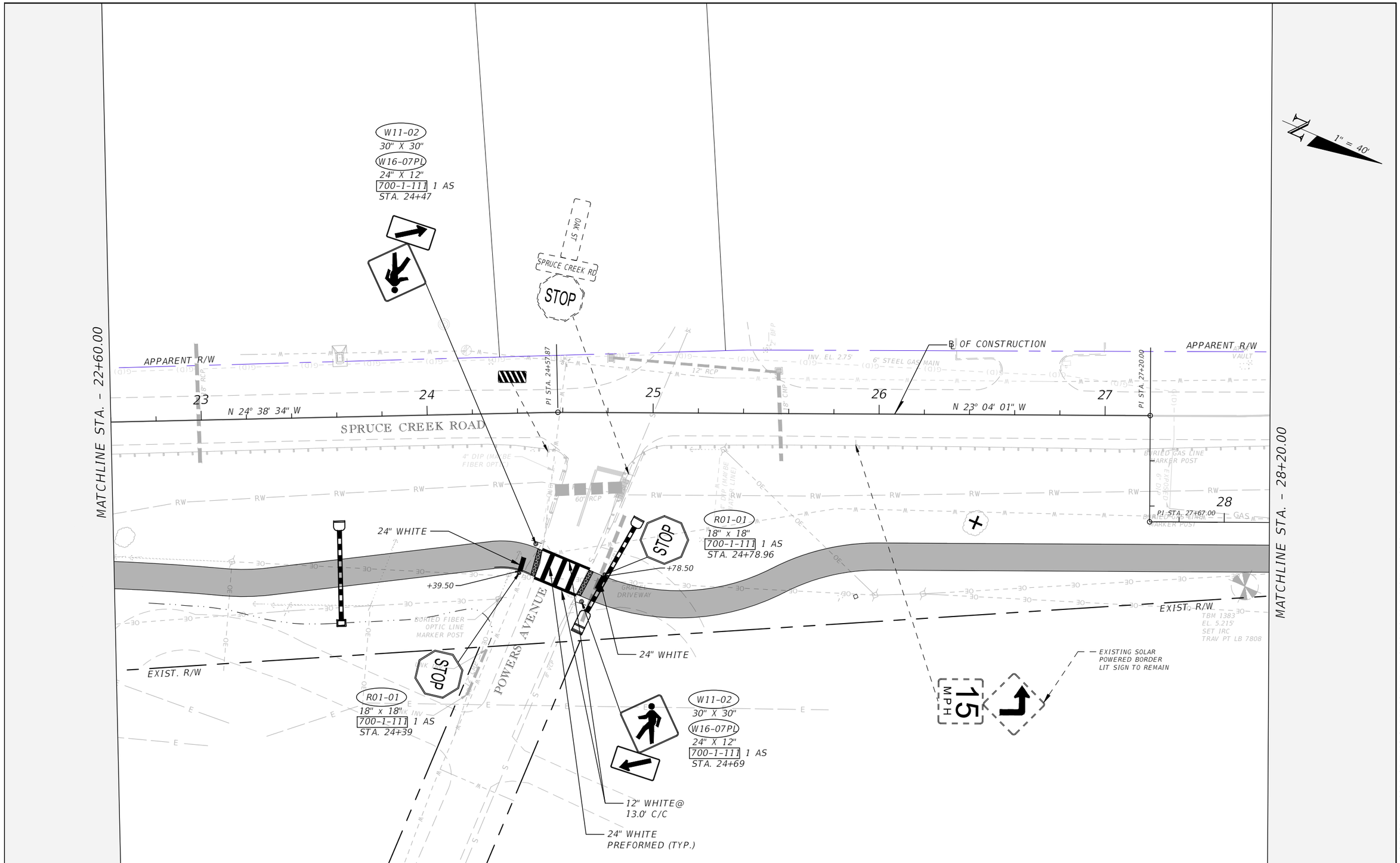

THE OFFICIAL RECORD OF THIS SHEET IS THE ELECTRONIC FILE DIGITALLY SIGNED AND SEALED UNDER RULE 61G15-23.004, F.A.C.

REVISIONS	
DATE	DESCRIPTION

CITY OF PORT ORANGE
1000 CITY CENTER CIRCLE
PORT ORANGE, FL 32129

MERLYNN O. ANDERSON, P.E.
P.E. LICENSE NUMBER 83096

STANLEY CONSULTANTS, INC.
80 SPRING VISTA DRIVE
DEBARY, FL 32713

SJR2C LOOP TRAIL
FROM SOUTH OF SELIN CIR TO HERBERT ST

ROAD	COUNTY	FINANCIAL PROJECT ID
SPRUCE CREEK RD	VOLUSIA	439865-3-54-01

SIGNING AND PAVEMENT MARKING PLAN

SHEET NO. 53

O'Neill, Karen 5/14/2025 12:39:04 PM Z:\2016 Projects\10962 (Port Orange)\TWO 09 - SUNTrail (SJR2C Loop) Spruce Creek Rd\CAD\439865\Signing\PLANSP01.dwg

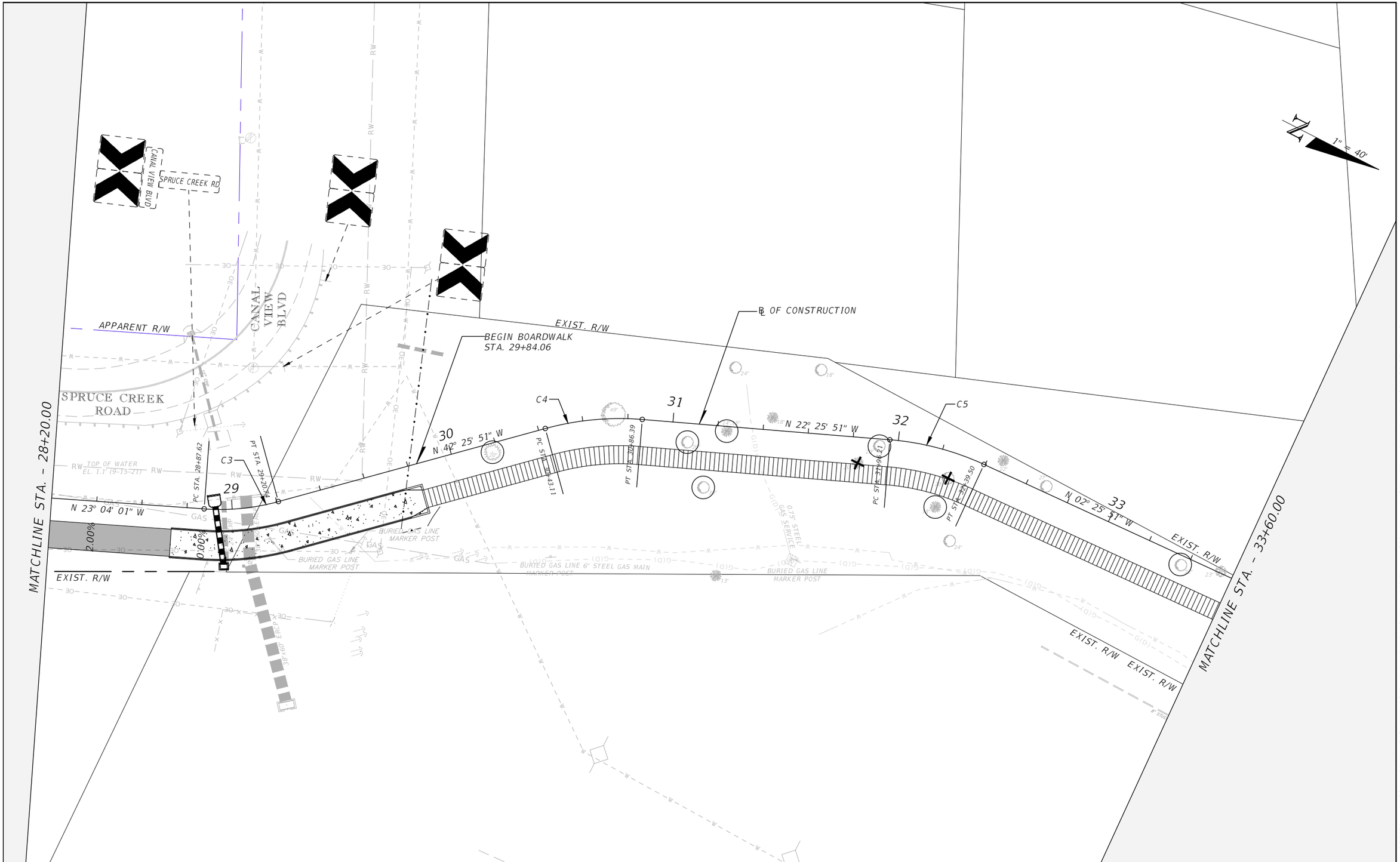

THE OFFICIAL RECORD OF THIS SHEET IS THE ELECTRONIC FILE DIGITALLY SIGNED AND SEALED UNDER RULE 61G15-23.004, F.A.C.

REVISIONS	
DATE	DESCRIPTION

CITY OF PORT ORANGE
1000 CITY CENTER CIRCLE
PORT ORANGE, FL 32129

MERLYNN O. ANDERSON, P.E.
P.E. LICENSE NUMBER 83096

STANLEY CONSULTANTS, INC.
80 SPRING VISTA DRIVE
DEBARY, FL 32713

SJR2C LOOP TRAIL
FROM SOUTH OF SELIN CIR TO HERBERT ST

ROAD	COUNTY	FINANCIAL PROJECT ID
SPRUCE CREEK RD	VOLUSIA	439865-3-54-01

SIGNING AND PAVEMENT MARKING PLAN

SHEET NO.
54

O'Neill, Karen 5/14/2025 12:39:09 PM Z:\2016 Projects\10962 (Port Orange)\TWO 09 - SUNTrail (SJR2C Loop) Spruce Creek Rd\CAD\439865\Signing\PLANSP01.dwg

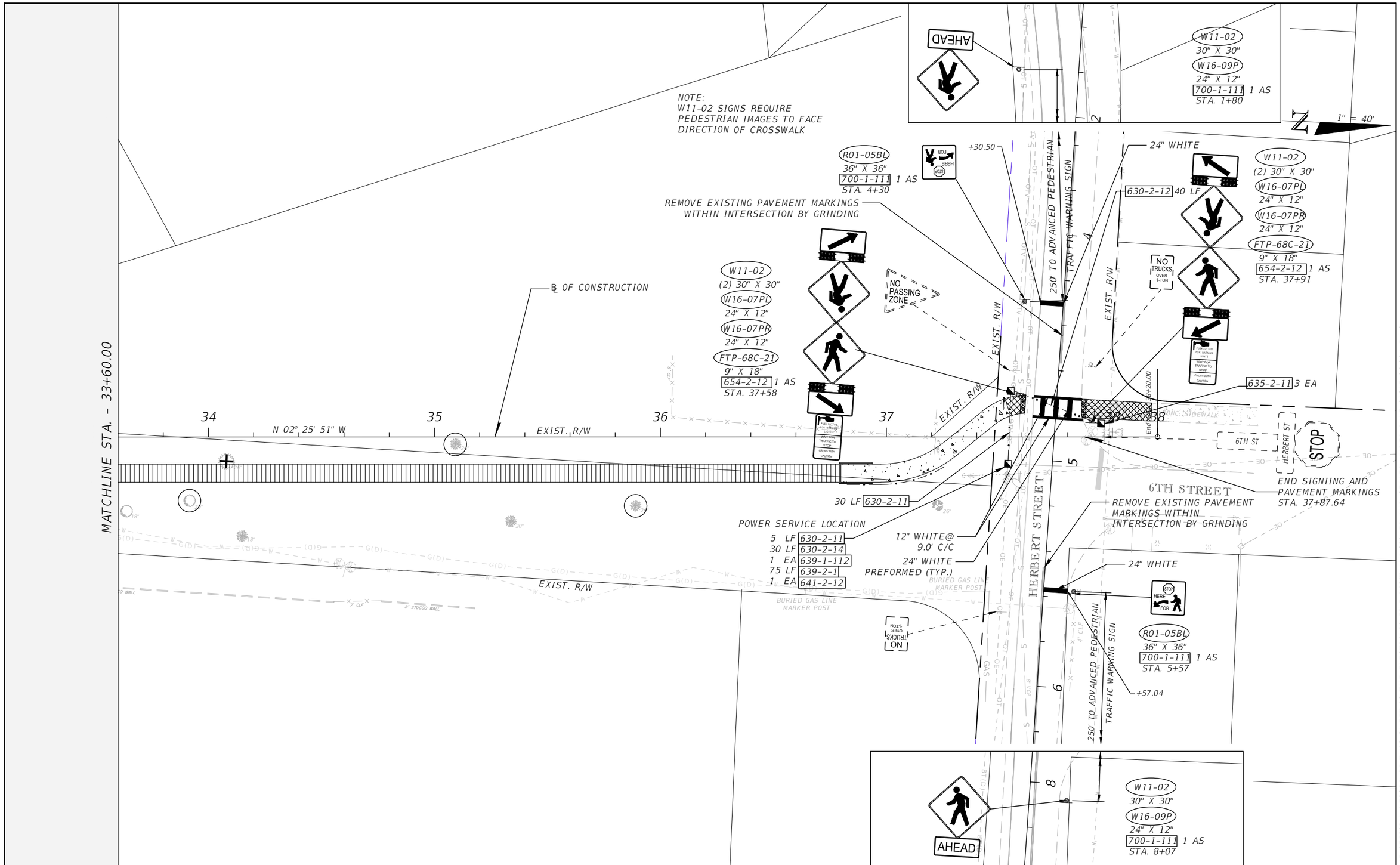

THE OFFICIAL RECORD OF THIS SHEET IS THE ELECTRONIC FILE DIGITALLY SIGNED AND SEALED UNDER RULE 61G15-23.004, F.A.C.

REVISIONS	
DATE	DESCRIPTION

CITY OF PORT ORANGE
1000 CITY CENTER CIRCLE
PORT ORANGE, FL 32129

MERLYNN O. ANDERSON, P.E.
P.E. LICENSE NUMBER 83096

STANLEY CONSULTANTS, INC.
80 SPRING VISTA DRIVE
DEBARY, FL 32713

SJR2C LOOP TRAIL
FROM SOUTH OF SELIN CIR TO HERBERT ST

ROAD	COUNTY	FINANCIAL PROJECT ID
SPRUCE CREEK RD	VOLUSIA	439865-3-54-01

SIGNING AND PAVEMENT MARKING PLAN

SHEET NO.
55

O'Neill, Karen 5/14/2025 12:39:19 PM Z:\2016 Projects\10962 (Port Orange)\TWO 09 - SUNTrail (SJR2C Loop) Spruce Creek Rd\CAD\439865\Signing\PLANSP01.dwg

GENERAL:

1. Notify Allen Cates, Tim Karr, Billy White, and Sean Castello (386) 736-5968 at Traffic Engineering at least two business days prior to beginning work.
2. Coordinate work schedule, coordinate timing and authorization of power service with Allen Cates, Billy White, Bobby Maddox, Tim Karr, and Sean Castello (386) 736-5968 at Volusia County Traffic Engineering.
3. All materials and hardware must be pre-approved by Volusia County Traffic Engineering.
4. Unless otherwise noted, all removed equipment must be disposed of by the Contractor in areas provided by the Contractor.
5. Notify Sunshine One-Call 1-800-432-4770 at least two business days in advance of any excavation work which would otherwise interfere with any above ground or below ground utilities. Maintain current locate ticket throughout the duration of the work. County of Volusia is not a member of the Sunshine One-Call, for locates call (386) 736-5968, Volusia County Traffic Engineering to request to complete a locate ticket to schedule the locate.
6. Verify color codes for signal cable with Volusia County Traffic Engineering before ordering.
7. No test borings were made where conduit runs are to be installed by jacking, directional boring, or trenching. the job site conditions must be examined prior to a bid proposal.
8. A signal inspection must be scheduled with Allen Cates, Billy White, and Sean Castello (Volusia County Traffic Engineering) (386) 736-5968 10 days prior to the signal being place into operation.
9. At the time of final inspection, two sets of construction "As-Built" plans must be provided: one to Volusia County Traffic Engineering and one for the traffic signal controller cabinet.
10. These plans reflect conditions known during plan development. In the event actual physical conditions prevent the application or the progression of any work specified in these plans, the Engineer must be notified immediately and prior to any further work activity.
11. At no time is the contractor to change any signal timings. Volusia County will maintain all signal timings before, during and after construction. If any timing changes are made by the contractor, a timing sheet must be placed in the controller cabinet with date and time of installing, along with a contact number.
12. The existing power utility must be contacted to determine if a service processing fee is required. If required, fee must be included as part of payment for the electrical power service assembly.
13. An I.M.S.A. Level II signal technician must be on site through all phases of construction and on call with a two hour max. response time.
14. Unless otherwise stated, elevations listed in these plans were derived from rod readings.

CONDUIT / PULL BOXES:

1. All conduit must be 2" minimum diameter unless otherwise specified in the plans. Aboveground conduit must be 2" rigid galvanized steel, unless otherwise indicated. Underground conduit must be schedule 40 buried at 36" minimum depth, unless otherwise indicated.
2. As directed by the project Engineer, conduit must be adjusted vertically to avoid any possible conflicts with underground utilities.
3. Pull boxes must not be located at the bottom of any ditch or retention area/pond.
4. All ends of conduits in pull boxes and cabinets must be sealed with electrical putty after wiring is complete.
5. Traffic signal pull boxes must be composite and the covers must be FDOT approved of non-metallic construction with recessed cover logo "TRAFFIC SIGNALS" (quazite 1324 bk.,1212ba or equal)(17"X30")
6. All pull boxes and fiber boxes must have a concrete apron around the pull box per FDOT Specifications.

THE OFFICIAL RECORD OF THIS SHEET IS THE ELECTRONIC FILE DIGITALLY SIGNED AND SEALED UNDER RULE 61G15-23.004, F.A.C.

REVISIONS	
DATE	DESCRIPTION

CITY OF PORT ORANGE
1000 CITY CENTER CIRCLE
PORT ORANGE, FL 32129

MERLYNN O. ANDERSON, P.E.
P.E. LICENSE NUMBER 83096

STANLEY CONSULTANTS, INC.
80 SPRING VISTA DRIVE
DEBARY, FL 32713

SJR2C LOOP TRAIL
FROM SOUTH OF SELIN CIR TO HERBERT ST

ROAD	COUNTY	FINANCIAL PROJECT ID
SPRUCE CREEK RD	VOLUSIA	439865-3-54-01

SIGNALIZATION GENERAL NOTES

SHEET NO. 56

DUNLAWTON AVE

R/W LINE

EXISTING MAST ARM POLE TO REMAIN

R/W LINE

PI STA. 18+57.99

EXISTING MAST ARM POLE TO REMAIN

18

19

20

SPRUCE CREEK RD

PEDESTRIAN POLE
STA. 19+88.24
41.68' Rt.

1 EA	646-1-11
1 EA	653-1-11
1 AS	665-1-11

1-HV (PED), 1-LV (PED)
2 RUNS @ 10 LF 630-2-11

PI STA. 19+83.22

PEDESTRIAN POLE
STA. 19+91.20
31.39' Rt.
(SEE NOTE 1)

646-1-11	1 EA
653-1-11	1 EA
665-1-11	1 AS

P2(1) P4(1)

PED. SIGNAL
COUNT-DOWN
1-SECT., 1-WAY

(R10-3i) 2 EA

START CROSSING
Watch For Vehicles
DON'T START
Finish Crossing If Started
TIME REMAINING To Finish Crossing
DON'T CROSS
PUSH BUTTON TO CROSS
DUNLAWTON RD

(1)

START CROSSING
Watch For Vehicles
DON'T START
Finish Crossing If Started
TIME REMAINING To Finish Crossing
DON'T CROSS
PUSH BUTTON TO CROSS
SPRUCE CREEK RD

(1)

1" = 20'

P2

P4

PC STA. 20+17.20

1-HV (PED), 1-LV (PED)
630-2-11 2 RUNS @ 20 LF

EXISTING SIGNAL CONTROLLER CABINET TO REMAIN
632-7-2 50 LF

REMOVE EXISTING TRAFFIC SIGNAL PULL BOXES AND INSTALL NEW PULL BOXES TO MATCH NEW CONCRETE GRADE

EXISTING MAST ARM POLE TO REMAIN

REMOVE EXISTING PEDESTRIAN SIGNAL HEADS AND DETECTORS
653-1-60 2 EA
665-1-60 2 EA

635-2-11 3 EA

R/W LINE

5'x8' BOX CULVERT

5'x8' BOX CULVERT

SET IRC TRAV PT LB 7808

PEDESTRIAN CROSSING SIGNAL

FIBER OPTIC VAULT

FIBER OPTIC MARKER POST

UTILITY VAULT

NOTES:
1. PEDESTRIAN POLE IS TO BE EMBEDDED IN THE CONCRETE CURB PER INDEX 646-001 OF THE FDOT STANDARD PLANS.
2. MAJOR STREET: DUNLAWTON AVENUE (45 MPH)
   MINOR STREET: SPRUCE CREEK ROAD (35 MPH)

REVISIONS	
DATE	DESCRIPTION

CITY OF PORT ORANGE
1000 CITY CENTER CIRCLE
PORT ORANGE, FL 32129

MERLYNN O. ANDERSON, P.E.
P.E. LICENSE NUMBER 83096

STANLEY CONSULTANTS, INC.
80 SPRING VISTA DRIVE
DEBARY, FL 32713

SJR2C LOOP TRAIL
FROM SOUTH OF SELIN CIR TO HERBERT ST

ROAD	COUNTY	FINANCIAL PROJECT ID
SPRUCE CREEK RD	VOLUSIA	439865-3-54-01

SIGNALIZATION PLAN

SHEET NO. 57

THE OFFICIAL RECORD OF THIS SHEET IS THE ELECTRONIC FILE DIGITALLY SIGNED AND SEALED UNDER RULE 61G15-23.004, F.A.C.

O'Neill, Karen 5/14/2025 12:39:56 PM Z:\2016 Projects\10962 (Port Orange)\TWO 09 - SUNTrail (SJR2C Loop) Spruce Creek Rd\CAD\439865\Signals\PLANSG01.dwg

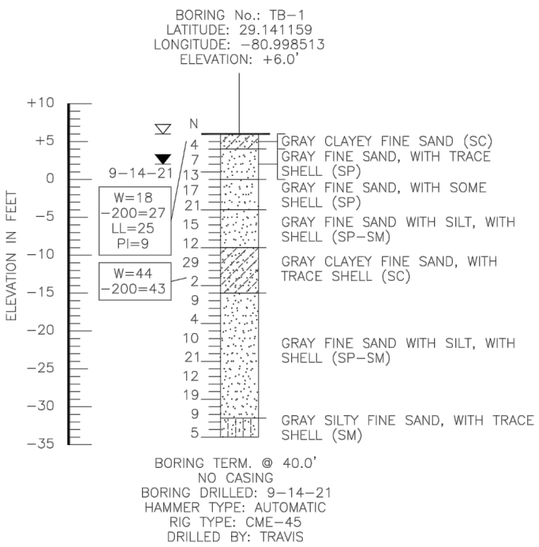

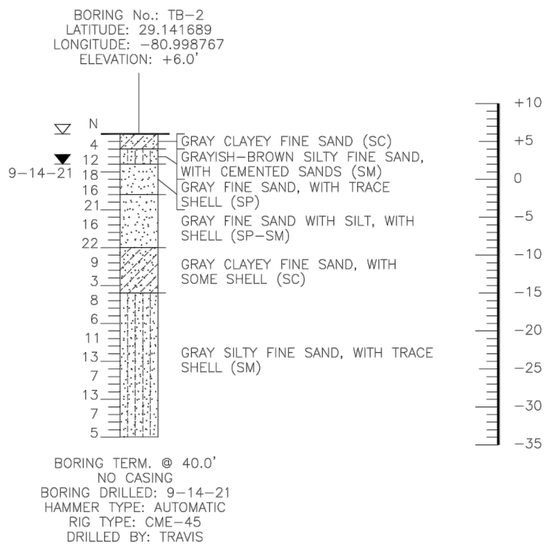

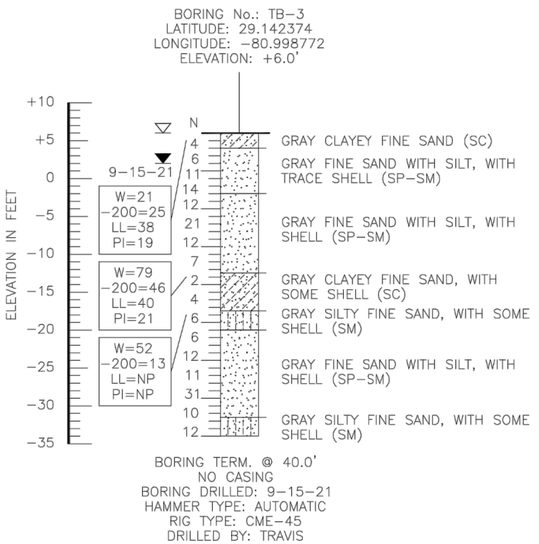

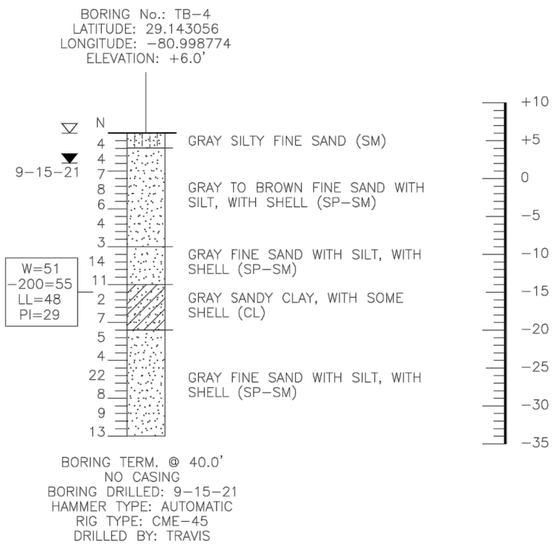



LEGEND

B-1 APPROXIMATE LOCATION OF STANDARD PENETRATION TEST BORING

NOTE: PLAN AS SHOWN IS PRELIMINARY FOR REPRESENTATION OF BORING LOCATIONS ONLY AND MAY NOT BE INDICATIVE OF FINAL CONTRACT PLANS.

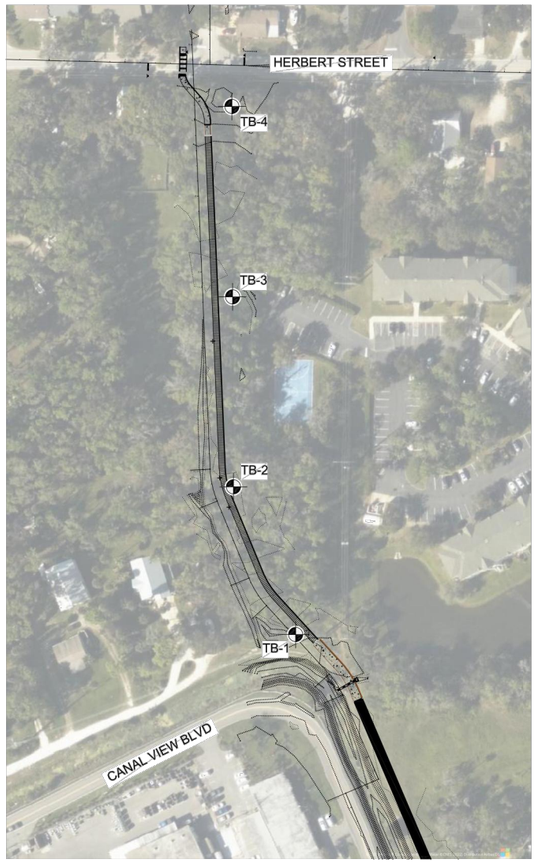

LEGEND

- SAND
- SILTY SAND
- CLAYEY SAND
- SANDY CLAY
- (SP) UNIFIED SOIL CLASSIFICATION GROUP SYMBOL
- 8-11-11 ENCOUNTERED GROUNDWATER LEVEL (DATE OF READING)
- ESTIMATED NORMAL SEASONAL HIGH GROUNDWATER LEVEL
- W=0, -200=0, LL=0, PI=0, NP= NATURAL MOISTURE CONTENT (%), FINES PASSING No. 200 SIEVE (%), LIQUID LIMIT (%), PLASTICITY INDEX (%), NON-PLASTIC
- N STANDARD PENETRATION RESISTANCE IN BLOWS PER FOOT UNLESS OTHERWISE NOTED

AUTOMATIC HAMMER

STANDARD PENETRATION TEST DATA

SPOON INSIDE DIA.	1 3/8 in.
SPOON OUTSIDE DIA.	2 in.
ASTM STANDARD DROP	AUTOMATIC HAMMER
AVG. HAMMER DROP	30 in.
HAMMER WEIGHT	140 lbs.

GRANULAR MATERIALS

RELATIVE DENSITY	SPT (BLOWS/FOOT)
VERY LOOSE	LESS THAN 3
LOOSE	3-8
MEDIUM DENSE	8-24
DENSE	24-40
VERY DENSE	GREATER THAN 40

SILTS AND CLAYS

CONSISTENCY	SPT (BLOWS/FOOT)
VERY SOFT	LESS THAN 1
SOFT	1-3
FIRM	3-6
STIFF	6-12
VERY STIFF	12-24
HARD	GREATER THAN 24

NOTES:

1) LAYER BOUNDARIES ARE APPROXIMATE AND REPRESENT SOIL LAYERS AT EACH TEST HOLE LOCATION ONLY. SUBSURFACE VARIATIONS BETWEEN BORINGS SHOULD BE ANTICIPATED.
2) BASED ON A REVIEW OF THE ST. JOHNS RIVER WATER MANAGEMENT DISTRICT POTENTIOMETRIC MAPS OF THE UPPER FLORIDAN AQUIFER FOR THIS PROJECT AREA, THE POTENTIAL ARTESIAN HEAD ELEVATION IS ESTIMATED TO BE +0 FEET NGVD. THE CONTRACTOR SHALL BE PREPARED TO HANDLE ARTESIAN WATER LEVELS UP TO ELEVATION +0 FEET NGVD.
3) LATITUDE AND LONGITUDE AT BORING LOCATIONS IS BASED ON HANDHELD GPS DEVICE.
4) ELEVATION AT BORING LOCATIONS IS BASED ON REVIEW OF PROJECT TOPOGRAPHIC INFORMATION AND SHOULD BE CONSIDERED APPROXIMATE.

ENVIRONMENTAL CLASSIFICATION:

SUPERSTRUCTURE: N/A

SUBSTRUCTURE:

STEEL: EXTREMELY AGGRESSIVE
CONCRETE: MODERATELY AGGRESSIVE (pH=5.9)

THE OFFICIAL RECORD OF THIS SHEET IS THE ELECTRONIC FILE DIGITALLY SIGNED AND SEALED UNDER RULE 61G15-23.004, F.A.C.

REVISIONS	
DATE	DESCRIPTION

CITY OF PORT ORANGE
1000 CITY CENTER CIRCLE
PORT ORANGE, FL 32129

ELIAS N. JAMMAL, P.E.
P.E. LICENSE NUMBER 60126

TERRACON
1675 LEE ROAD
WINTER PARK, FL 32789

SJR2C LOOP TRAIL
FROM SOUTH OF SELIN CIR TO HERBERT ST

ROAD	COUNTY	FINANCIAL PROJECT ID
SPRUCE CREEK RD	VOLUSIA	439865-3-54-01

REPORT OF CORE BORINGS

SHEET NO. 58

GENERAL NOTES:

1. DESIGN SPECIFICATIONS:
   A. FLORIDA DEPARTMENT OF TRANSPORTATION STRUCTURES MANUAL DATED JANUARY 2024.

   B. AASHTO LRFD SPECIFICATION FOR HIGHWAY BRIDGES, 9TH EDITION IN CONJUNCTION WITH AASHTO LRFD GUIDE SPECIFICATION FOR DESIGN OF PEDESTRIAN BRIDGES, 2009 EDITION.

2. CONSTRUCTION SPECIFICATIONS:
   A. FLORIDA DEPARTMENT OF TRANSPORTATION STANDARD SPECIFICATIONS FOR ROAD AND BRIDGE CONSTRUCTION, FY 2023–2024 EDITION

3. DESIGN METHODOLOGY:
   A. DESIGN TIMBER AND CONNECTIONS IN ACCORDANCE WITH THE LRFD METHOD.

4. DESIGN LOADINGS:
   A. PEDESTRIAN LIVE LOAD = 90 PSF IN ACCORDANCE WITH THE LRFD METHOD.
   B. MAINTENANCE VEHICLE = 3,046 LBS MAX (WET-WEIGHT+PAYLOAD).
   C. DESIGN DEAD LOADS: WEIGHT OF TIMBER = 40 PCF
      MAX. WEIGHT OF HDPE = 47 PCF (ASTM D6111)
   D. AN ALLOWANCE FOR A 1" DIAMATER CONDUIT FOR LIGHTING HAS BEEN INCLUDED IN THE DESIGN.

5. MATERIALS AND FABRICATION:
   A. TOP OF RAILING MUST BE HIGH DENSITY POLYETHYLENE (HDPE) WITH A MINIMUM 50 YEAR DESIGN LIFE WITH THE FOLLOWING MINIMUM PROPERTIES (ASTM D6109):
      1) ALLOWABLE FLEXURAL STRESS = 1,200 PSI
      2) MODULUS OF ELASTICITY = 114,000 PSI

   B. ALL LUMBER SHALL BE CUT, DRILLED AND FABRICATED PRIOR TO PRESSURE TREATMENT WITH PRESERVATIVES.

   C. ALL LUMBER SHALL BE TREATED IN ACCORDANCE WITH SPECIFICATION 955.

   D. ALL LUMBER MUST BE VISUALLY GRADED NO. 1 DENSE OR BETTER SOUTHERN PINE IN ACCORDANCE WITH SPECIFICATION 952, EXCEPT AS MODIFIED BY NOTE E. ALL LUMBER IS TO BE FURNISHED PER THE REQUIREMENTS OF THE AMERICAN SOFTWOOD LUMBER STANDARDS, PS20-20, AS SPECIFIED IN THE TABLE BELOW:

DIMENSION OF SAWN SOUTHERN PINE LUMBER								
SURFACE	THICKNESS (IN)			WIDTH (IN)				
NOMINAL	2	3	4	6	8	10	12	16
ACTUAL	1½	2½	3½	5½	7¼	9¼	11¼	15¼

   E. LIGHT POSTS ARE NOMINAL 6"X6" SELECT STRUCTURAL SOUTHERN PINE TIMBER PER SPECIFICATION 952.

   F. VARIATIONS IN DEPTH BETWEEN STRINGERS MUST NOT EXCEED ⅜ IN. SO AS TO PROVIDE A FLAT SURFACE.

   G. MOISTURE CONTENT OF LUMBER 4 IN. OR LESS IN NOMINAL THICKNESS MUST BE 19 PERCENT OR LESS.

   H. MAXIMUM DEFLECTION DUE TO LIVE LOAD FOR HORIZONTAL LUMBER COMPONENTS IS LIMITED TO A VALUE EQUAL TO SPAN/360.

   I. SPLICES OF JOISTS SHALL BE MADE OVER SUPPORTS.

   J. BOARDWALK DECKING SPLICES ARE NOT PERMITTED.

   K. FOR VERTICAL AND HORIZONTAL ALIGNMENT REFER TO PATHWAY PLANS. VERIFY ALL DIMENSIONS BEFORE CONSTRUCTION.

   L. TIMBER BOARDWALK SUBSTRUCTURE AND PILE FOUNDATIONS SHALL CONFORM TO SPECIFICATIONS 951 THROUGH 954.

6. CONNECTORS:
   A. USE BOLTS OR SCREWS, AS SHOWN, FOR ASSEMBLY ON THE BOARDWALK. ALL BOLT ASSEMBLIES SHALL HAVE WASHERS UNDER BOTH THE BOLT HEAD AND NUTS. SCREWS SHALL BE COUNTERSUNK AND INSTALLED IN HOLES DRILLED WITH A COUNTERSUNK DRILL BIT. NAILS MAY ONLY BE USED FOR PRE-ASSEMBLY AS SHOWN. ALL BOLTS, NUTS, WASHERS, SCREWS AND NAILS SHALL BE HOT-DIP GALVANIZED (HDG) IN ACCORDANCE WITH SPECIFICATION 962-9.

7. TIMBER PILING NOTES:
   A. THE TIMBER PILES SHALL BE ASTM D-25 WITH A MINIMUM TIP DIAMETER OF 8 INCHES AND BUTT DIAMETER OF 12 INCHES PER SPECIFICATION 953-2.

   B. THE FACTORED PILE DESIGN LOAD IS 4.0 TONS. FOR FINAL SEATING, THE NOMINAL BEARING RESISTANCE IS 8.0 TONS BASED ON A RESISTANCE FACTOR OF 0.50. THE TIMBER PILES SHALL BE DRIVEN IN ACCORDANCE WITH SPECIFICATION 455. WAVE EQUATION ANALYSIS SHALL BE PERFORMED BY THE CONTRACTOR TO DETERMINE THE DYNAMIC CAPACITY OF THE TIMBER PILES, BASED ON THE HAMMER TYPE, CUSHION AND DESIGN LOADS BEFORE PILE DRIVING COMMENCEMENT. THE USE OF ENGINEERING NEWS FORMULA WILL NOT BE ACCEPTED. PROVIDE THIS INFORMATION FOR REVIEW BY THE ENGINEER IN ADVANCE OF PILE DRIVING.

   C. THE PILES SHALL BE INSTALLED USING APPROPRIATE EQUIPMENT TO ALLOW DRIVING TO THE REQUIRED BEARING DEPTHS AND TO LIMIT DRIVING STRESSES WITHIN THE PILES. PER NAVAL FACILITIES ENGINEERING COMMAND (NAVFAC) DESIGN MANUAL 7, THE MAXIMUM DRIVING ENERGY FOR TIMBER PILES SHOULD BE LIMITED TO 20,000 FOOT-POUNDS.

   D. THE PILE DRIVING EQUIPMENT MAY CONSIST OF FIXED LEADS OR SWINGING LEADS. IT IS RECOMMENDED TO USE FIXED LEADS WHICH OFFER GOOD CONTROL OF THE PILE ALIGNMENT AND HELP MINIMIZE OVERSTRESSING OF THE PILES FROM ECCENTRIC IMPACTS.

   E. PILE EMBEDMENT DEPTHS CAN BE FOUND IN THE BOARDWALK DATA TABLES SHEET. PILE DRIVING SHALL BE AS CONTINUOUS AS POSSIBLE AND UNINTERRUPTED TO THE TERMINATION DEPTH.

   F. PILES SHALL BE DRIVEN WITH A PROTECTIVE DRIVING CAP OR RING. A PROPERLY FITTED DRIVING CAP SHOULD BE USED FOR THE PILE BUTTS. THE PILE BUTTS SHOULD BE "FRESH HEADED" AND PROPERLY SHAPED TO FIT SNUGLY IN THE DRIVING CAP. PILES THAT HAVE SPLITTING OR BROOMING SHALL BE CUT BACK TO SOLID WOOD BEFORE FINAL RESISTANCE IS MEASURED. FRESH CUT AND SCARS SHALL BE COATED WITH A GENEROUS APPLICATION OF PRESERVATIVE.

   G. PILES SHALL BE DRIVEN PLUMB.

   H. TIMBER PILES SHALL BE SOUTHERN PINE LUMBER MARINE GRADE IN ACCORDANCE WITH AMERICAN WOOD PRESERVER'S ASSOCIATION (AWPA), CATEGORY US5C, AND SOUTHERN PINE INSPECTION BUREAU (SPIB) STANDARD GRADING RULES FOR SOUTHERN PINE LUMBER. TIMBER TO BE TREATED IN ACCORDANCE WITH SPECIFICATION 955.

8. ALL ELEVATIONS REFER TO NAVD 1988 DATUM.

INDEX OF STRUCTURAL SHEETS

B1-01	GENERAL NOTES
B1-02	BOARDWALK DATA TABLES
B1-03	BOARDWALK DETAILS (1 OF 3)
B1-04	BOARDWALK DETAILS (2 OF 3)
B1-05	BOARDWALK DETAILS (3 OF 3)

THE OFFICIAL RECORD OF THIS SHEET IS THE ELECTRONIC FILE DIGITALLY SIGNED AND SEALED UNDER RULE 61G15-23.004, F.A.C.

REVISIONS	
DATE	DESCRIPTION

CITY OF PORT ORANGE
1000 CITY CENTER CIRCLE
PORT ORANGE, FL 32129

MARK NIEDERMANN, P.E.
P.E. LICENSE NUMBER 45957
FLORIDA BRIDGE & TRANSPORTATION, INC.
633 DARTMOUTH STREET
ORLANDO, FL 32804

SJR2C LOOP TRAIL
FROM SOUTH OF SELIN CIR TO HERBERT ST

ROAD	COUNTY	FINANCIAL PROJECT ID
SPRUCE CREEK RD	VOLUSIA	439865-3-54-01

GENERAL NOTES

SHEET NO. B1-01

BOARDWALK BENT LOCATIONS		
BENT NUMBER	STATION	TOP OF DECK ELEVATION
BENT NO. 1	29+84.89	10.25
BENT NO. 2	29+94.89	10.25
BENT NO. 3	30+04.89	10.25
BENT NO. 4	30+14.89	10.25
BENT NO. 5	30+24.89	10.25
BENT NO. 6	30+34.89	10.25
BENT NO. 7	30+43.11	10.25
BENT NO. 8	30+53.93	10.25
BENT NO. 9	30+64.75	10.25
BENT NO. 10	30+75.57	10.25
BENT NO. 11	30+86.39	10.25
BENT NO. 12	30+96.39	10.25
BENT NO. 13	31+06.39	10.25
BENT NO. 14	31+16.39	10.25
BENT NO. 15	31+26.39	10.25
BENT NO. 16	31+36.39	10.25
BENT NO. 17	31+46.39	10.25
BENT NO. 18	31+56.39	10.25
BENT NO. 19	31+66.39	10.25
BENT NO. 20	31+76.39	10.25
BENT NO. 21	31+86.39	10.25
BENT NO. 22	31+96.21	10.25
BENT NO. 23	32+07.03	10.25
BENT NO. 24	32+17.86	10.25
BENT NO. 25	32+28.68	10.25
BENT NO. 26	32+39.50	10.25
BENT NO. 27	32+48.37	10.25
BENT NO. 28	32+58.37	10.25
BENT NO. 29	32+68.37	10.25
BENT NO. 30	32+78.37	10.25
BENT NO. 31	32+88.37	10.25
BENT NO. 32	32+98.37	10.25
BENT NO. 33	33+08.37	10.25
BENT NO. 34	33+18.37	10.25
BENT NO. 35	33+28.37	10.25
BENT NO. 36	33+38.37	10.25
BENT NO. 37	33+48.37	10.25
BENT NO. 38	33+58.37	10.25
BENT NO. 39	33+68.37	10.25
BENT NO. 40	33+78.37	10.25
BENT NO. 41	33+88.37	10.25
BENT NO. 42	33+98.37	10.25
BENT NO. 43	34+08.37	10.25

BOARDWALK BENT LOCATIONS		
BENT NUMBER	STATION	TOP OF DECK ELEVATION
BENT NO. 44	34+18.37	10.25
BENT NO. 45	34+28.37	10.25
BENT NO. 46	34+38.37	10.25
BENT NO. 47	34+48.37	10.25
BENT NO. 48	34+58.37	10.25
BENT NO. 49	34+68.37	10.25
BENT NO. 50	34+78.37	10.25
BENT NO. 51	34+88.37	10.25
BENT NO. 52	34+98.37	10.25
BENT NO. 53	35+08.37	10.25
BENT NO. 54	35+18.37	10.25
BENT NO. 55	35+28.37	10.25
BENT NO. 56	35+38.37	10.25
BENT NO. 57	35+48.37	10.25
BENT NO. 58	35+58.37	10.25
BENT NO. 59	35+68.37	10.25
BENT NO. 60	35+78.37	10.25
BENT NO. 61	35+88.37	10.25
BENT NO. 62	35+98.37	10.25
BENT NO. 63	36+08.37	10.25
BENT NO. 64	36+18.37	10.25
BENT NO. 65	36+28.37	10.25
BENT NO. 66	36+38.37	10.25
BENT NO. 67	36+48.37	10.25
BENT NO. 68	36+58.37	10.25
BENT NO. 69	36+68.37	10.25
BENT NO. 70	36+78.37	10.25

TIMBER PILE INFORMATION					
BOARDWALK BENT LOCATIONS	NO. OF BENTS	MINIMUM PILE DIAMETER AT TIP (IN)	MINIMUM EMBEDMENT LENGTH* (FT)	PILE CUTOFF ELEVATION (FT)	ESTIMATED MINIMUM TIP (FT NAVD)
BENT NO. 1 THRU. BENT NO. 70	70	8	10	9.188	-24.000

*EMBEDMENT DEPTH DEFINED PER SPECIFICATIONS 455-5.9

THE OFFICIAL RECORD OF THIS SHEET IS THE ELECTRONIC FILE DIGITALLY SIGNED AND SEALED UNDER RULE 61G15-23.004, F.A.C.

REVISIONS	
DATE	DESCRIPTION

CITY OF PORT ORANGE
1000 CITY CENTER CIRCLE
PORT ORANGE, FL 32129

MARK NIEDERMANN, P.E.
P.E. LICENSE NUMBER 45957

FLORIDA BRIDGE & TRANSPORTATION, INC.
633 DARTMOUTH STREET
ORLANDO, FL 32804

SJR2C LOOP TRAIL
FROM SOUTH OF SELIN CIR TO HERBERT ST

ROAD	COUNTY	FINANCIAL PROJECT ID
SPRUCE CREEK RD	VOLUSIA	439865-3-54-01

BOARDWALK DATA TABLES

SHEET NO.
B1-02

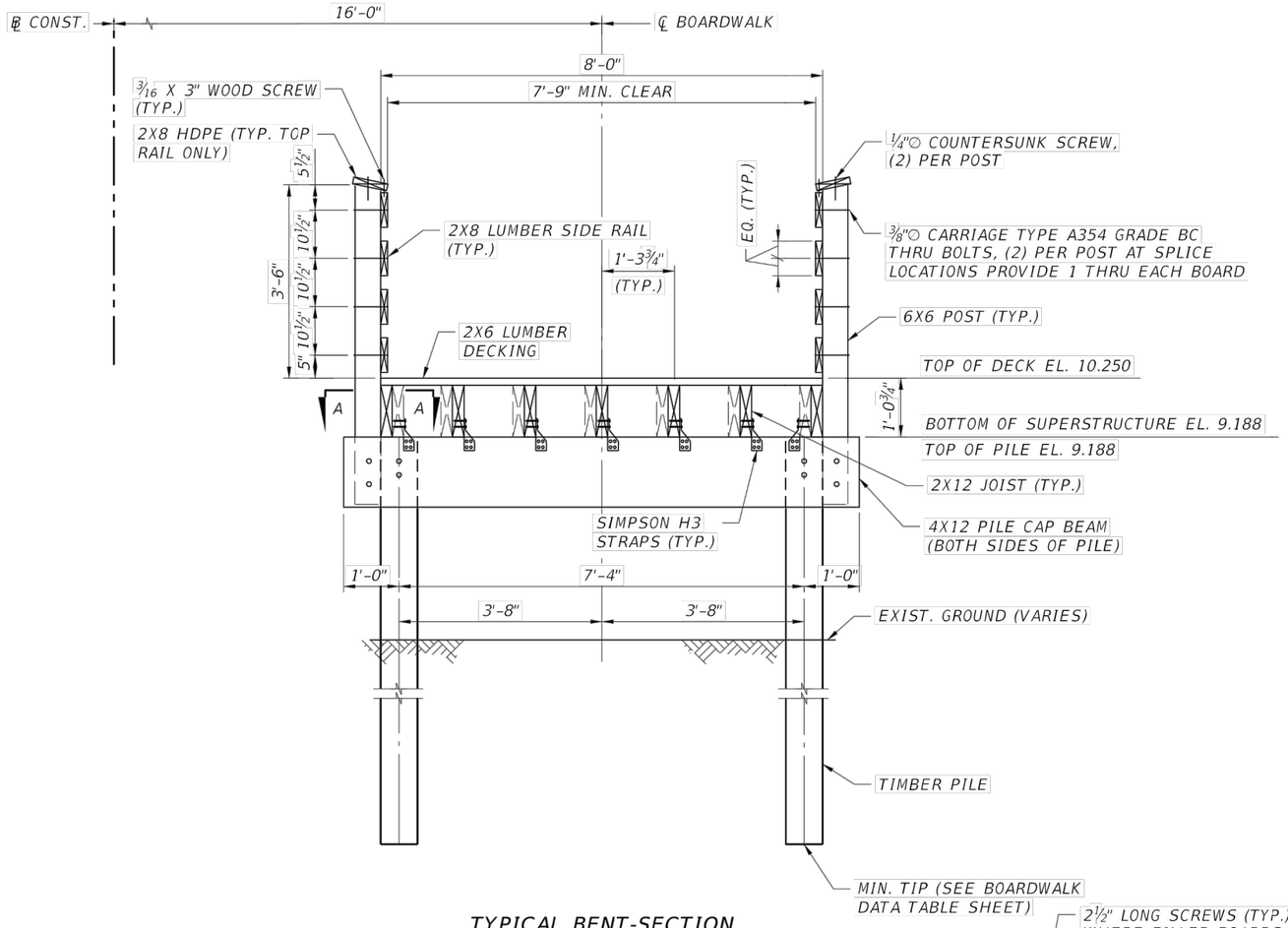

TYPICAL BENT-SECTION

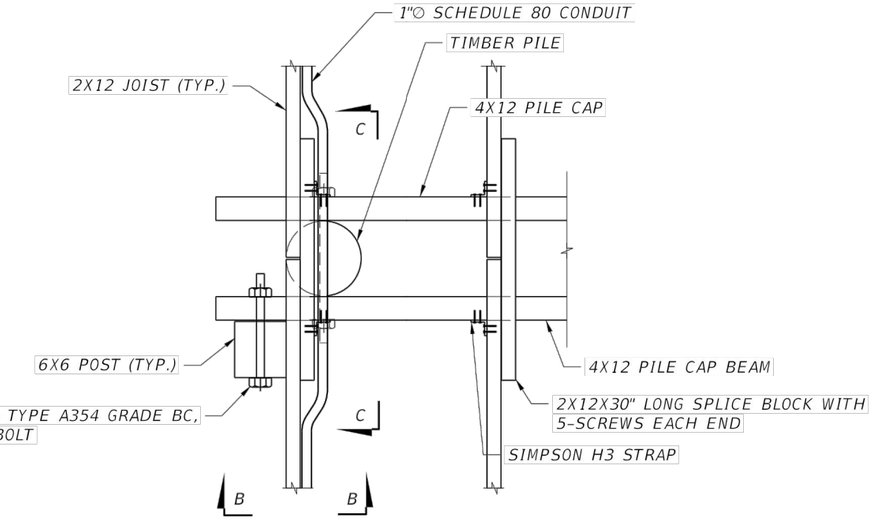

SECTION A-A

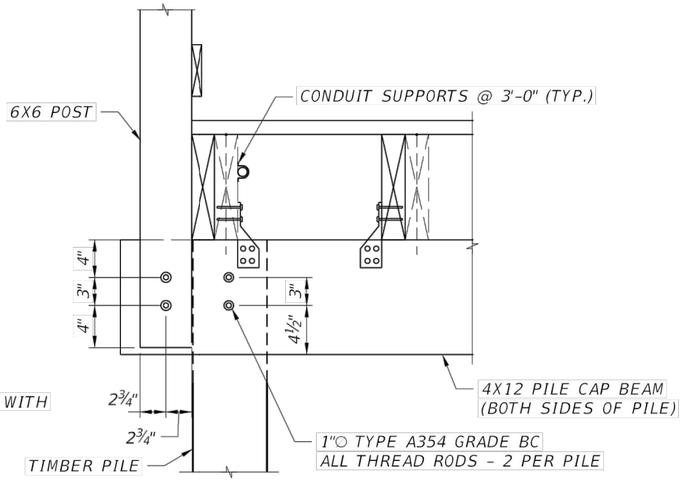

SECTION B-B

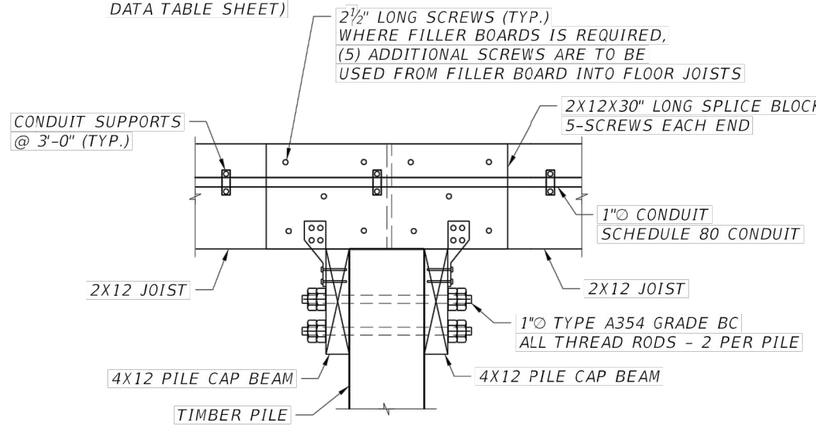

SECTION C-C

NOTES:

1. ALL HARDWARE SHOWN SHALL BE HOT-DIP GALVANIZED (HDG). SIMPSON CONNECTORS SHALL BE GALVANIZED OR ZMAX COATED.
2. SUBMIT DOCUMENTATION FOR ALTERNATIVE CONNECTORS FOR APPROVAL IF IT DIFFERS FROM THE CONNECTORS SHOWN IN THE PLANS.

REVISIONS	
DATE	DESCRIPTION

CITY OF PORT ORANGE
1000 CITY CENTER CIRCLE
PORT ORANGE, FL 32129

MARK NIEDERMANN, P.E.
P.E. LICENSE NUMBER 45957
FLORIDA BRIDGE & TRANSPORTATION, INC.
633 DARTMOUTH STREET
ORLANDO, FL 32804

SJR2C LOOP TRAIL
FROM SOUTH OF SELIN CIR TO HERBERT ST

ROAD	COUNTY	FINANCIAL PROJECT ID
SPRUCE CREEK RD	VOLUSIA	439865-3-54-01

BOARDWALK DETAILS (1 OF 3)

SHEET NO. B1-03

THE OFFICIAL RECORD OF THIS SHEET IS THE ELECTRONIC FILE DIGITALLY SIGNED AND SEALED UNDER RULE 61G15-23.004, F.A.C.

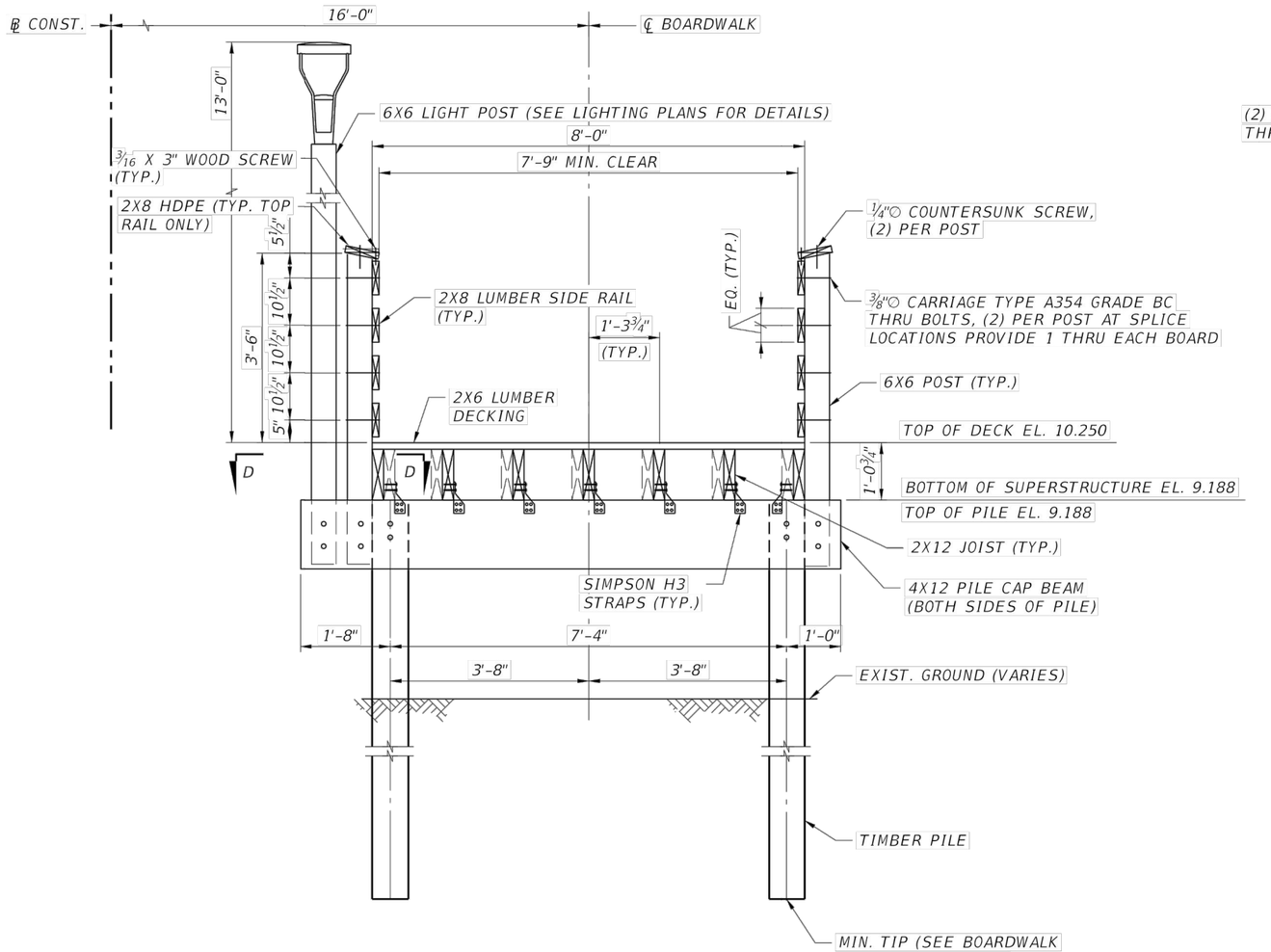

BENT-SECTION AT LIGHT LOCATIONS

(BENT NO. 2, 11, 19, 27, 35, 43, 50, 58 AND 66)

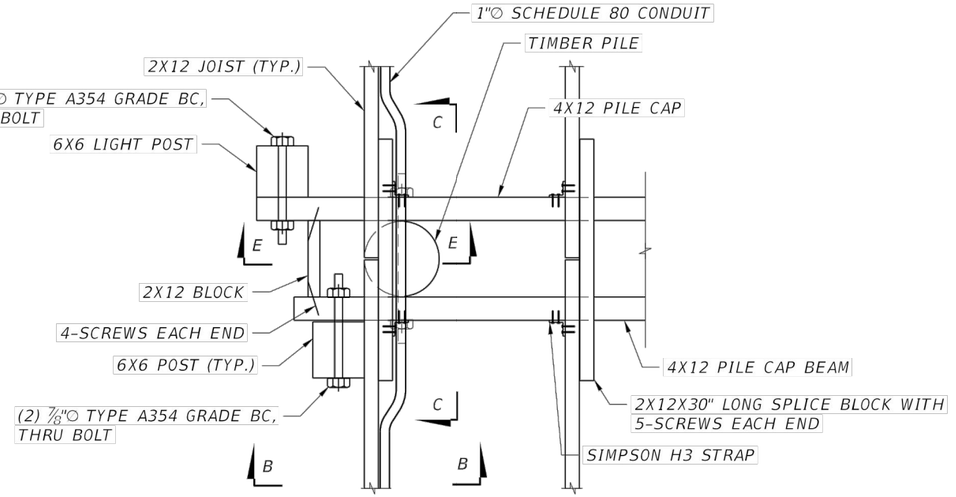

SECTION D-D

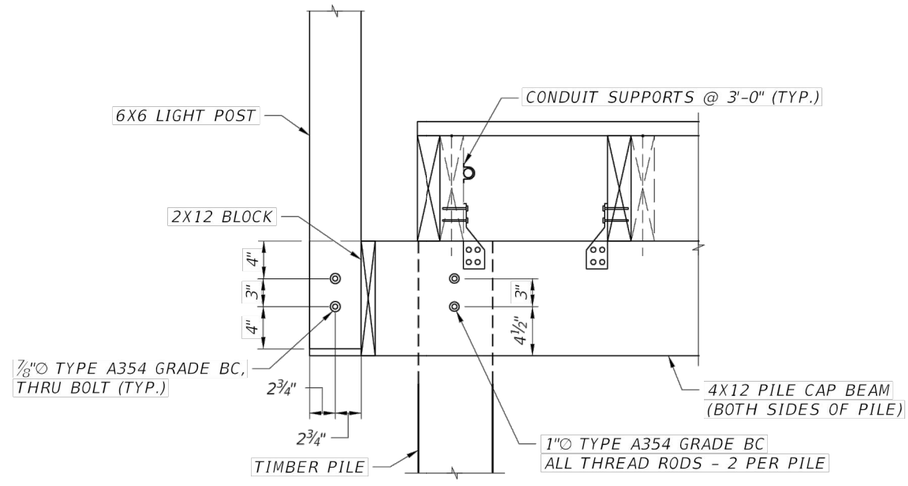

SECTION E-E

NOTES:

1. ALL HARDWARE SHOWN SHALL BE HOT-DIP GALVANIZED (HDG). SIMPSON CONNECTORS SHALL BE GALVANIZED OR ZMAX COATED.
2. SUBMIT DOCUMENTATION FOR ALTERNATIVE CONNECTORS FOR APPROVAL IF IT DIFFERS FROM THE CONNECTORS SHOWN IN THE PLANS.
3. FOR SECTIONS B-B AND C-C, SEE SHEET B1-03

REVISIONS	
DATE	DESCRIPTION

CITY OF PORT ORANGE
1000 CITY CENTER CIRCLE
PORT ORANGE, FL 32129

MARK NIEDERMANN, P.E.
P.E. LICENSE NUMBER 45957
FLORIDA BRIDGE & TRANSPORTATION, INC.
633 DARTMOUTH STREET
ORLANDO, FL 32804

SJR2C LOOP TRAIL
FROM SOUTH OF SELIN CIR TO HERBERT ST

ROAD	COUNTY	FINANCIAL PROJECT ID
SPRUCE CREEK RD	VOLUSIA	439865-3-54-01

BOARDWALK DETAILS (2 OF 3)

SHEET NO. B1-04

THE OFFICIAL RECORD OF THIS SHEET IS THE ELECTRONIC FILE DIGITALLY SIGNED AND SEALED UNDER RULE 61G15-23.004, F.A.C.

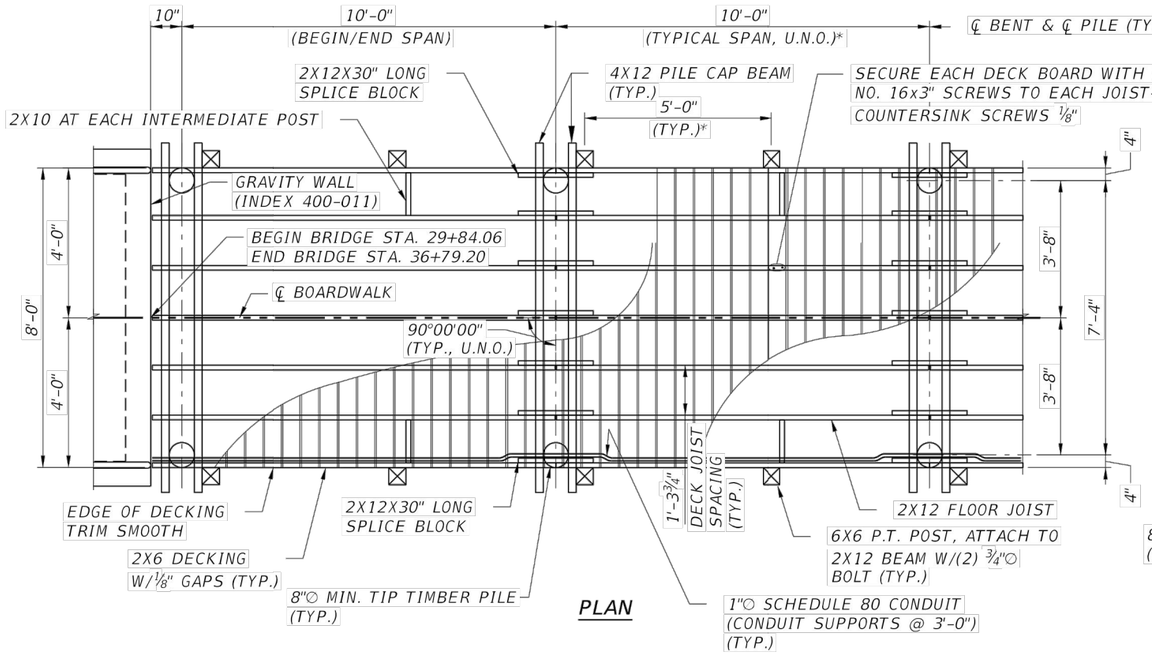

PLAN

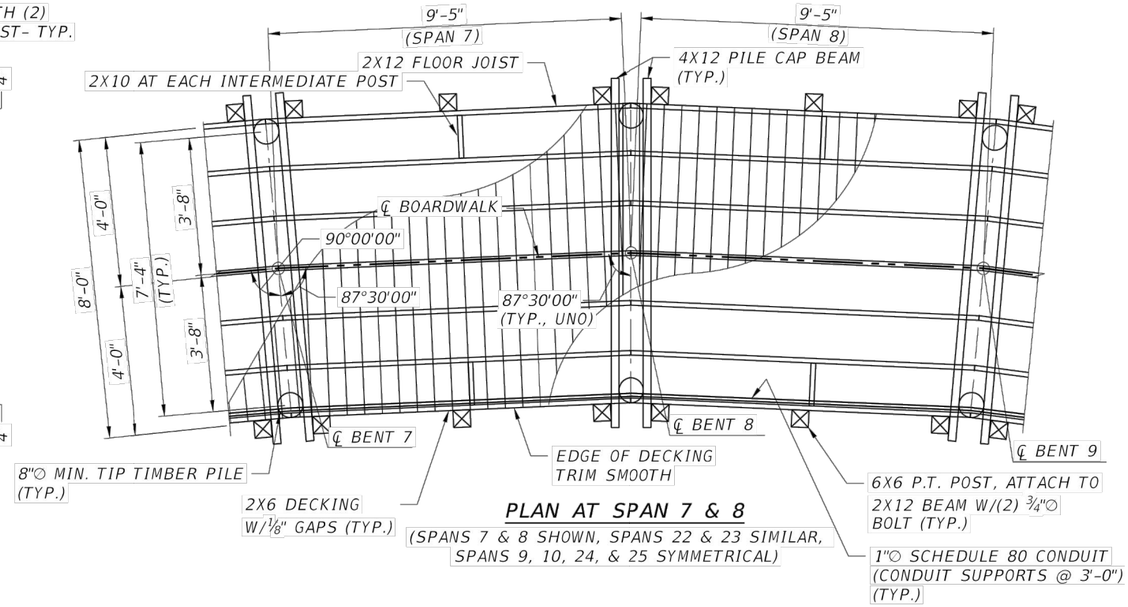

PLAN AT SPAN 7 & 8

(SPANS 7 & 8 SHOWN, SPANS 22 & 23 SIMILAR, SPANS 9, 10, 24, & 25 SYMMETRICAL)

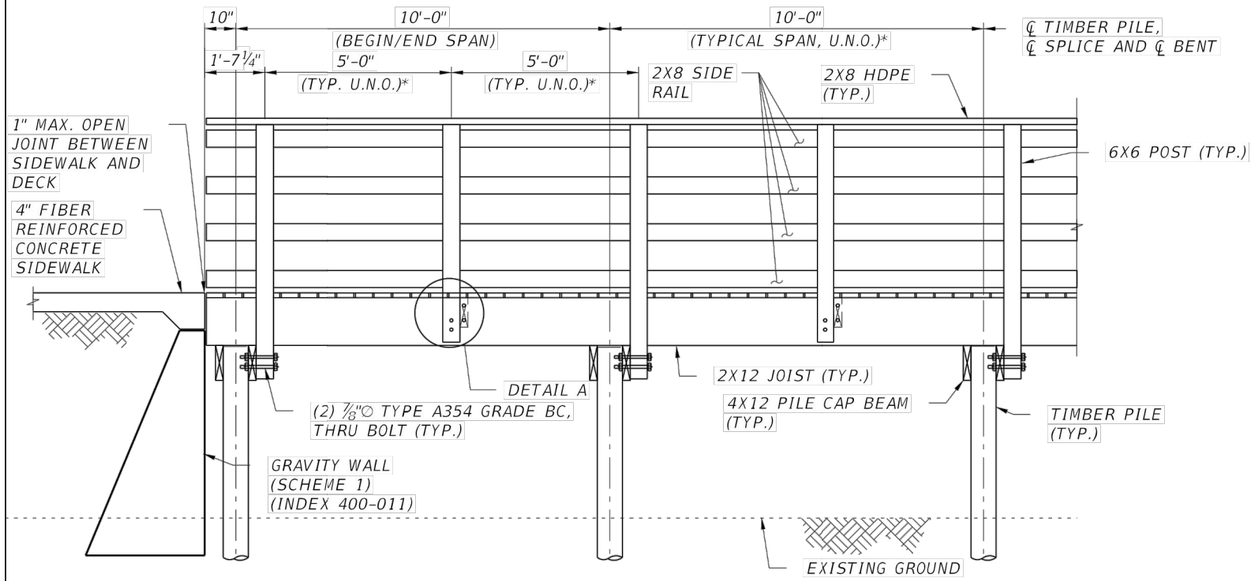

ELEVATION

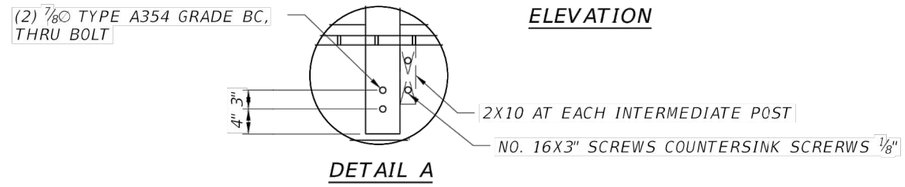

DETAIL A

*SEE BELOW FOR ADDITIONAL SPAN LENGTHS AND POST SPACINGS

SPAN	SPAN LENGTH (AT CL)	POST SPACING FROM PREVIOUS BENT
6	8'-2½"	4'-1¼"
21	9'-9⅞"	4'-11"
26	8'-10½"	4'-5¼"

REVISIONS	
DATE	DESCRIPTION

CITY OF PORT ORANGE
1000 CITY CENTER CIRCLE
PORT ORANGE, FL 32129

MARK NIEDERMANN, P.E.
P.E. LICENSE NUMBER 45957
FLORIDA BRIDGE & TRANSPORTATION, INC.
633 DARTMOUTH STREET
ORLANDO, FL 32804

SJR2C LOOP TRAIL
FROM SOUTH OF SELIN CIR TO HERBERT ST

ROAD	COUNTY	FINANCIAL PROJECT ID
SPRUCE CREEK RD	VOLUSIA	439865-3-54-01

BOARDWALK DETAILS (3 OF 3)

SHEET NO. B1-05

THE OFFICIAL RECORD OF THIS SHEET IS THE ELECTRONIC FILE DIGITALLY SIGNED AND SEALED UNDER RULE 61G15-23.004, F.A.C.

Timber Boardwalk Structural Design Calculations

on file with Margaret Tomlinson, Construction and Engineering Manager

Consisting of 63 Pages

TIMBER BOARDWALK
STRUCTURAL DESIGN CALCULATIONS

SJR2C LOOP TRAIL (SPRUCE CREEK RD)
FROM SOUTH OF SELIN CIRCLE TO HERBERT STREET

FPID: 439865-3-54-01

Prepared For:
CITY OF PORT ORANGE

Prepared By:
Florida Bridge and Transportation, Inc.
633 Dartmouth St.
Orlando, FL 32804
(407) 513-5709

April, 2025

Engineer of Record
Mark Niedermann, P.E.

TABLE OF CONTENTS

TIMBER BOARDWALK
STRUCTURAL DESIGN CALCULATIONS

SUN TRAIL BOARDWALK (SPRUCE CREEK ROAD)
CANAL VIEW BOULEVARD TO HERBERT STREET

SECTION	PAGE
TIMBER BOARDWALK CALCULATIONS	3
LIGHT POST CALCULATIONS	32
HDPE TECHNICAL DATA & AVAILABLE SIZES	48
TX TURF GATOR UTILITY VEHICLE SPECS	51
BRIDGE GEOMETRY	57
QUANTITIES	59

Engineer of Record:

Mark Niedermann
State of Florida, Professional Engineer
License No. 45957
Florida Bridge and Transportation, Inc.

This item has been digitally signed and sealed by

DIGITAL SIGNATURE

On the date adjacent to the seal
Printed copies of this document are not considered signed and sealed and the signature must be verified on any electronic copies.

TIMBER BOARDWALK CALCULATIONS

BOARDWALK ANALYSIS - In accordance with:

1) AASHTO LRFD Guide Specifications for the Design of Pedestrian Bridges - December 2009
2) AASHTO LRFD Bridge Design Specifications - 9th Edition - 2020

BOARDWALK DIMENSIONS

Width of Boardwalk: $W_{deck} := 8 \cdot ft$

Span Length: $L_{span} := 10 \cdot ft$

Number of Joists: $N_{joist} := 7$

Max Ht of Post: $H_{max} := 3.5 \cdot ft$

(Measured from top of deck)

X Bracing Ht: $H_{brace} := 4 \cdot ft$

(Measured from Ground To bottom of cap)

MEMBER SIZES

Member (Nom Size)	Horizontal Dimension	Vertical Dimension
DECK (2 x 6)	$b_{deck} := 5.5in$	$d_{deck} := 1.5 \cdot in$
RAIL (2 x 8)	$b_{rail} := 1.5 \cdot in$	$d_{rail} := 7.25 \cdot in$
HDPE RAIL TOP (2 x 8)	$b_{railtop} := 7.25 \cdot in$	$d_{railtop} := 1.5 \cdot in$

EFFECTIVE SIZES

[Ref 2 - LRFD 8.4.1.1.2]

POSTS (6 x 6 x 5'- 6")	$b_{post} := 5.5 \cdot in$	$d_{post} := 5.5 \cdot in$
JOIST (2 x 12)	$b_{joist} := 1.5 \cdot in$	$d_{joist} := 11.25 \cdot in$
CAP (4 x 12)	$b_{cap} := 3.5 \cdot in$	$d_{cap} := 11.25 \cdot in$
X BRACE (2 x 6)	$b_{xbrace} := 0 \cdot in$	$d_{xbrace} := 0 \cdot in$
PILE (8" dia)	$dia_{pile} := 8 \cdot in$	Tip

DESIGN LOADS

DEAD LOAD (WOOD)

$DL_{wood} := 50 \cdot pcf$

DEAD LOAD (HDPE) - Ref. Attached

$DL_{hdpe} := 47 \cdot pcf$

LIVE LOAD (3.1 and 3.2 - Ref 1 above)

Pedestrian Live Load

$LL_{ped} := 90 \cdot psf$

Vehicle Live Load

$LL_{veh} := 0.825 \cdot kip$

Only designed for a Gator Utility/Maintenance Vehicle (See attachments for calculation)

DECK

Design Span - Between Joists

$$Span_{deck} := \frac{W_{deck} - b_{joist}}{N_{joist} - 1} \qquad Span_{deck} = 1.313\,ft$$

Applied Distributed Load

Dead Load - DL

$w_{dldeck} := b_{deck} \cdot d_{deck} \cdot DL_{wood}$ $w_{dldeck} = 2.865 \cdot plf$

Pedestrian Live Load - LL

$w_{llpdeck} := LL_{ped} \cdot b_{deck}$ $w_{llpdeck} = 41.25 \cdot plf$

Applied Factored Moments and Shears

MOMENT

DL (4 span continuous)

$M_{dldeck} := 0.107 \cdot w_{dldeck} \cdot Span_{deck}^{2}$

$M_{dldeck} = 0.0005 \cdot kip \cdot ft$

LL (4 span continuous - Pedestrian)

$M_{lldeck} := 0.107 \cdot w_{llpdeck} \cdot Span_{deck}^{2}$

$M_{lldeck} = 0.008 \cdot kip \cdot ft$

LL (Gator TX Turf Utility Vehicle)

$M_{lvdeck} := \frac{(LL_{veh}\ Span_{deck})}{4}$

$M_{lvdeck} = 0.271 \cdot kip \cdot ft$

$M_{lldeck} := \max(M_{lldeck}, M_{lvdeck}) = 0.271 \cdot kip \cdot ft$

Applied Moment (Service)

$M_{deck} := M_{dldeck} + M_{lldeck}$ $M_{deck} = 0.271 \cdot kip \cdot ft$

Wood Properties and Design Values [Ref. 2 - LRFD 8.4.1.1.4-1 & 8.5.2.2]

ASTM D6109 - specify this requirement in plans

$F_b := 1000psi$ $E_o := 1.6 \cdot 10^{6} psi$ $F_{cpo} := 1550psi$ $\phi_b := 0.85$ $\phi_{cpo} := 0.90$ LRFD 8.5.2.2

Section Modulus For Deck

Centroid of Deck Section $C_{bottom} := \frac{d_{deck}}{2}$ $C_{bottom} = 0.75 \cdot in$

Moment of Intertia (Centroid) of Deck Section

$I_{deck} := \frac{1}{12} \cdot b_{deck} \cdot d_{deck}^{3}$

$I_{deck} = 1.547 \cdot in^{4}$

Section Modulus of Deck Section

$S_{deck} := \frac{I_{deck}}{C_{bottom}}$ $S_{deck} = 2.062 \cdot in^{3}$

Applicable Adjustment Factors [Ref 2 - LRFD 8.4.4]

Format Conversion Factor [8.4.4.2]

$C_{KF\_b} := \frac{2.5}{\phi_b}$ $C_{KF\_b} = 2.94$ For Bending

$C_{KF\_v} := C_{KF\_b}$ $C_{KF\_v} = 2.94$ For Shear

$C_M := 1.0$ Wet Service Factor [8.4.4.3]

$C_{iE} := 0.95$ Incising Factor [8.4.4.7] - Conserv.

$C_{ib} := 0.8$ Incising Factor [8.4.4.7] - Conserv.

$C_{iv} := 0.8$ Incising Factor [8.4.4.7] - Conserv.

$C_F := 1.0$ Size Factor [8.4.4.4]

$C_d := 1.0$ Deck Factor [8.4.4.8] - N/A

$C_{fu} := 1.0$ Flat Use Factor [8.4.4.6] - Load applied to narrow face- edgwise - N/A

$C_\lambda := 0.8$ Time Effect Factor [8.4.4.9] - (Strength 1)

Adjusted Design Values [Ref 2 - LRFD 8.4.4.1]

$F_b := F_b \cdot C_{KF\_b} \cdot C_M \cdot C_F \cdot C_\lambda \cdot C_{fu} \cdot C_{ib} \cdot C_d$ $F_b = 1882.4 \cdot psi$

$F_v := F_{cpo} \cdot C_{KF\_v} \cdot C_M \cdot C_\lambda \cdot C_{iv}$ $F_v = 2917.6 \cdot psi$

$E := E_o \cdot C_M \cdot C_{iE}$ $E = 1520000 \cdot psi$

Flexural Capacity [Ref 2 - LRFD 8.6.1]

$K_{bE} := 0.76$

$R_b := \min\left(50, \sqrt{\frac{Span_{deck} \cdot d_{deck}}{b_{deck}^2}}\right)$ $R_b = 0.9$

$F_{bE} := \frac{K_{bE} \cdot E}{R_b^2}$ $F_{bE} = 1479145 \cdot psi$

$A := \frac{F_{bE}}{F_b}$ $A = 785.796$

$C_L := \frac{1 + A}{1.9} - \sqrt{\frac{(1 + A)^2}{3.61} - \frac{A}{0.95}}$ $C_L = 1$

$M_r := \phi_b \cdot F_b \cdot S_{deck} \cdot C_L$ $M_r = 0.275 \cdot kip \cdot ft$ $M_{deck} = 0.271 \cdot kip \cdot ft$

$Check_1 := if(M_r > M_{deck}, "OK", "NG")$ $Check_1 = "OK"$

$M_r := S_{deck} \cdot F_b$ $M_r = 0.324 \cdot kip \cdot ft$ $M_{deck} = 0.271 \cdot kip \cdot ft$

$Check_2 := if(M_r > M_{deck}, "OK", "NG")$ $Check_2 = "OK"$

Check Deflection

$E_o = 1600000 \cdot psi$ AISC Beam Table 4 span continuous

$\Delta_d := \frac{0.0065 \cdot (w_{llpdeck}) \cdot Span_{deck}^4}{E_o \, I_{deck}}$ $\Delta_d = 0.0005555 \cdot in$

LL_{Limit} $\frac{Span_{deck}}{360} = 0.044 \cdot in$

$Check_3 := if\left(\Delta_d < \frac{Span_{deck}}{360}, "OK", "NG"\right)$ $Check_3 = "OK"$

DESIGN SUMMARY - 2"X6" DECKING GRADE NO. 1 SOUTHERN PINE

JOISTS

Design Span (Assume simple spans) - (Outside joist is comprised of half LL and half railing load, conserv. taken as all LL)

$Span_{joist} := L_{span} - dia_{pile}$ $Span_{joist} = 9.333\ ft$

Applied Distributed Load

Dead Load (simple span)

Live Load (simple span)

$w_{dldeck} := \frac{Span_{joist} \cdot d_{deck} \cdot Span_{deck} \cdot DL_{hdpe}}{Span_{joist}}$ $w_{dldeck} = 7.711 \cdot plf$

$w_{dljoist} := b_{joist} \cdot d_{joist} \cdot DL_{wood} + w_{dldeck}$ $w_{dljoist} = 13.57 \cdot plf$

$w_{llpjoist} := LL_{ped} \cdot Span_{deck}$ $w_{llpjoist} = 118.125 \cdot plf$

Applied Factored Moments and Shears

MOMENT

DL (simple span)

$M_{dljoist} := \frac{w_{dljoist} \cdot Span_{joist}^{2}}{8}$

$M_{dljoist} = 0.148 \cdot kip \cdot ft$

LL (simple span)

$M_{llpjoist} := \max\left(\frac{LL_{veh} \cdot Span_{joist}}{4}, \frac{w_{llpjoist} \cdot Span_{joist}^{2}}{8}\right)$

$M_{llpjoist} = 1.925 \cdot kip \cdot ft$

Factored Moment (Strength 1)

$M_{joist} := 1.25 \cdot M_{dljoist} + 1.75 \cdot M_{llpjoist}$ $M_{joist} = 3.553 \cdot kip \cdot ft$

SHEAR

DL (simple span)

$V_{dljoist} := 0.5 \cdot w_{dljoist} \cdot Span_{joist}$

$V_{dljoist} = 0.063 \cdot kip$

LL (simple span)

$V_{llpjoist} := 0.500 \cdot w_{llpjoist} \cdot Span_{joist}$

$V_{llpjoist} = 0.551 \cdot kip$

Factored Shear (Strength 1) - Table 3.4.1-1

$V_{joist} := 1.25 \cdot V_{dljoist} + 1.75 \cdot V_{llpjoist}$ $V_{joist} = 1.044 \cdot kip$

Wood Properties and Design Values [Ref. 2 - LRFD 8.4.1.1.4-1 & 8.5.2.2]

Grade No. 1 Southern Pine - 12 in. wide

$F_{bo} := 1000psi$ $F_{cpo} := 565psi$ $E_o := 1.6 \cdot 10^6 psi$

$\phi_b := 0.85$ $\phi_{cpo} := 0.9$ LRFD 8.5.2.2

Net Dimensions [8.4.1.1.2] Section Modulus For Joist

Centroid of Joist $C_{joist} := \frac{d_{joist}}{2}$ $C_{joist} = 5.625 \cdot in$

Moment of Intertia of Joist

$I_{joist} := \frac{1}{12} \cdot b_{joist} \cdot d_{joist}^3$

$I_{joist} = 177.979 \cdot in^4$

Section Modulus of Joist

$S_{joist} := \frac{I_{joist}}{C_{joist}}$ $S_{joist} = 31.641 \cdot in^3$

Applicable Adjustment Factors [Ref 2 - LRFD 8.4.4]

Format Conversion Factor [8.4.4.2]

$C_{KF\_b} := \frac{2.5}{\phi_b}$ $C_{KF\_b} = 2.94$ For Bending

$C_{KF\_v} := \frac{2.1}{\phi_{cpo}}$ $C_{KF\_v} = 2.33$ For Shear (Compression Perpendicular To Grain)

$C_M := 1.0$ Wet Service Factor [8.4.4.3]

$C_{iE} := 0.95$ Incising Factor [8.4.4.7] - Conserv.

$C_{ib} := 0.8$ Incising Factor [8.4.4.7] - Conserv.

$C_{iv} := 0.8$ Incising Factor [8.4.4.7] - Conserv.

$C_F := 1.0$ Size Factor [8.4.4.4]

$C_d := 1.0$ Deck Factor [8.4.4.8] - N/A

$C_{fu} := 1.0$ Flat Use Factor [8.4.4.6] - Load applied to narrow face- edgwise - N/A

$C_\lambda := 0.8$ Time Effect Factor [8.4.4.9] - (Strength 1)

Adjusted Design Values [Ref 2 - LRFD 8.4.4.1]

$F_b := F_{bo} \cdot C_{KF\_b} \cdot C_M \cdot C_F \cdot C_\lambda \cdot C_{fu} \cdot C_{ib} \cdot C_d$ $F_b = 1882.4 \cdot psi$

$F_v := F_{cpo} \cdot C_{KF\_v} \cdot C_M \cdot C_\lambda \cdot C_{iv}$ $F_v = 843.7 \cdot psi$

$E := E_o \cdot C_M \cdot C_{iE}$ $E = 1520000 \cdot psi$

Flexural Capacity [Ref 2 - LRFD 8.6.1]

$K_{bE} := 0.76$

$R_b := \min\left(50, \sqrt{\frac{Span_{joist} \cdot d_{joist}}{b_{joist}^2}}\right)$ $R_b = 23.7$

$F_{bE} := \frac{K_{bE} \cdot E}{R_b^2}$ $F_{bE} = 2062.9 \cdot psi$

$A := \frac{F_{bE}}{F_b}$ $A = 1.096$

$C_L := \frac{1 + A}{1.9} - \sqrt{\frac{(1 + A)^2}{3.61} - \frac{A}{0.95}}$ $C_L = 0.852$

$M_r := \phi_b \cdot F_b \cdot S_{joist} \cdot C_L$ $M_r = 3.593 \cdot kip \cdot ft$ $M_{joist} = 3.553 \cdot kip \cdot ft$

$Check_4 := if(M_r > M_{joist}, "OK", "NG")$ $Check_4 = "OK"$

Shear Capacity [LRFD 8.7]

$V_r := \frac{\phi_{cpo} \cdot F_v \cdot b_{joist} \cdot d_{joist}}{1.5}$ $V_r = 8.5 \cdot kip$ $V_{joist} = 1.044 \cdot kip$

$Check_5 := if(V_r < V_{joist}, "NG", "OK")$ $Check_5 = "OK"$

Check Deflection

$E_o = 1600000 \cdot psi$

$\Delta_j := \frac{5 \cdot (w_{llpjoist}) \cdot Span_{joist}^4}{384 E_o I_{joist}}$ AISC Beam Table simple span $\Delta_j = 0.071 \cdot in$

LL_{Limit} $\frac{Span_{joist}}{360} = 0.311 \cdot in$

$Check_6 := if\left[\frac{5 \cdot (w_{llpjoist}) \cdot Span_{joist}^4}{384 E_o I_{joist}} < \frac{Span_{joist}}{360}, "OK", "NG"\right]$ $Check_6 = "OK"$

DESIGN SUMMARY - USE GRADE NO. 1 SOUTHERN PINE - 2"X12" JOISTS

CAPS

Design Span (Assume simple spans)

Cap Length $L_{cap} := 9 \cdot ft + 4 \cdot in$

$Span_{cap} := L_{cap} - 2ft$ $Span_{cap} = 7.333\ ft$

Joist Reactions (Per Joist)

DL

$w_{dljoist} := b_{joist} \cdot d_{joist} \cdot DL_{wood}$ $w_{dljoist} = 5.859 \cdot plf$

$w_{dl.deck} := Span_{deck} \cdot DL_{hdpe} \cdot d_{deck}$ $w_{dl.deck} = 7.711 \cdot plf$

$w_{cap} := d_{cap} \cdot b_{cap} \cdot DL_{wood}$ $w_{cap} = 13.672 \cdot plf$

$R_{capdl} := \frac{(w_{dljoist} + w_{dl.deck}) \cdot L_{span}}{2}$ $R_{capdl} = 0.068 \cdot kip$

LL

$w_{lljoist} := Span_{deck} \cdot LL_{ped}$ $w_{lljoist} = 118.125 \cdot plf$

$R_{capll} := \frac{w_{lljoist} \cdot L_{span}}{2}$ $R_{capll} = 0.591 \cdot kip$

Factored Reactions (Strength 1)

$R_{joistcap} := 1.25 \cdot R_{capdl} + 1.75 \cdot R_{capll}$ $R_{joistcap} = 1.118 \cdot kip$

Applied Factored Moments and Shears

FACTORED MOMENT

$M_{cap} := 5.809 \cdot kip \cdot ft$ (FROM LARSA) $M_{cap} = 5.809 \cdot kip \cdot ft$

FACTORED SHEAR

$V_{cap} := 2.777 \cdot kip$ (FROM LARSA) $V_{cap} = 2.777 \cdot kip$

Wood Properties and Design Values [Ref. 2 - LRFD 8.4.1.1.4-1 & 8.5.2.2]

Grade 1 Southern Pine - 12 in wide

$F_{bo} := 1000psi$ $F_{cpo} := 565psi$ $E_o := 1.6 \cdot 10^6 psi$

$\phi_b := 0.85$ $\phi_{cpo} := 0.9$ LRFD 8.5.2.2

Net Dimensions [8.4.1.1.2] Section Modulus For Cap

Centroid of Cap $C_{cap} := \frac{d_{cap}}{2}$ $C_{cap} = 5.625 \cdot in$

Moment of Intertia of Cap

$$I_{cap} := \frac{1}{12} \cdot b_{cap} \cdot d_{cap}^3$$

$I_{cap} = 415.283 \cdot in^4$

Section Modulus of Cap Section

$$S_{cap} := \frac{I_{cap}}{C_{cap}} \qquad S_{cap} = 73.828 \cdot in^3$$

Applicable Adjustment Factors [Ref 2 - LRFD 8.4.4]

Format Conversion Factor [8.4.4.2]

$C_{KF\_b} := \frac{2.5}{\phi_b}$ $C_{KF\_b} = 2.94$ For Bending

$C_{KF\_v} := \frac{2.1}{\phi_{cpo}}$ $C_{KF\_v} = 2.33$ For Shear (Compression Perpendicular To Grain)

$C_M := 1.0$ Wet Service Factor [8.4.4.3]

$C_{iF} := 0.95$ Incising Factor [8.4.4.7] - Conserv.

$C_{ib} := 0.8$ Incising Factor [8.4.4.7] - Conserv.

$C_{iv} := 0.8$ Incising Factor [8.4.4.7] - Conserv.

$C_F := 1.0$ Size Factor [8.4.4.4]

$C_d := 1.0$ Deck Factor [8.4.4.8] - N/A

$C_{fu} := 1.0$ Flat Use Factor [8.4.4.6] - Load applied to narrow face- edgwise - N/A

$C_\lambda := 0.8$ Time Effect Factor [8.4.4.9] - (Strength 1)

Adjusted Design Values [Ref 2 - LRFD 8.4.4.1]

$F_b := F_{bo} \cdot C_{KF\_b} \cdot C_M \cdot C_F \cdot C_\lambda \cdot C_{fu} \cdot C_{ib} \cdot C_d$ $F_b = 1882.4 \cdot psi$

$F_v := F_{cpo} \cdot C_{KF\_v} \cdot C_M \cdot C_\lambda \cdot C_{iv}$ $F_v = 843.7 \cdot psi$

$E := E_o \cdot C_M \cdot C_{iE}$ $E = 1520000 \cdot psi$

Flexural Capacity [Ref 2 - LRFD 8.6.1]

$K_{bE} := 0.76$

$R_b := \min\left(50, \sqrt{\frac{Span_{cap} \cdot d_{cap}}{b_{cap}^2}}\right)$ $R_b = 9$

$F_{bE} := \frac{K_{bE} \cdot E}{R_b^2}$ $F_{bE} = 14294.1 \cdot psi$

$A := \frac{F_{bE}}{F_b}$ $A = 7.594$

$C_L := \frac{1 + A}{1.9} - \sqrt{\frac{(1 + A)^2}{3.61} - \frac{A}{0.95}}$ $C_L = 0.993$

$M_r := \phi_b \cdot S_{cap} \cdot F_b \cdot C_L$ $M_r = 9.77 \cdot kip \cdot ft$ $M_{cap} = 5.809 \cdot kip \cdot ft$

$Check_7 := if(M_r > M_{cap}, "OK", "NG")$ $Check_7 = "OK"$

Shear Capacity [LRFD 8.7]

$V_r := \frac{\phi_{cpo} \cdot F_v \cdot b_{cap} \cdot d_{cap}}{1.5}$ $V_r = 19.9 \cdot kip$ $V_{cap} = 2.777 \cdot kip$

$Check_8 := if(V_r < V_{cap}, "NG", "OK")$ $Check_8 = "OK"$

Check Deflection

$E_o = 1600000 \cdot psi$ AISC Beam Table simple span

$\Delta_c := \frac{5 \cdot \left[\frac{R_{joistcap} \cdot ((N_{joist} - 1))}{Span_{cap}}\right] \cdot Span_{cap}^4}{384 E_o I_{cap}}$ $\Delta_c = 0.09 \cdot in$

LL limit $\frac{Span_{cap}}{360} = 0.244 \cdot in$

$Check_9 := if\left[\frac{5 \cdot \left[\frac{R_{joistcap} \cdot ((N_{joist} - 1))}{Span_{cap}}\right] \cdot Span_{cap}^4}{384 E_o I_{cap}} < \frac{Span_{cap}}{360}, "OK", "NG"\right]$ $Check_9 = "OK"$

DESIGN SUMMARY - USE GRADE No. 1 SOUTHERN PINE - 4"X12" CAPS

TIMBER PILES AXIAL LOAD

Service Dead Load - Per Pile

Decking: $DL_{pilesdeck} := \frac{d_{deck} \cdot W_{deck} \cdot L_{span} \cdot DL_{hdpe}}{2}$ $DL_{pilesdeck} = 0.235 \cdot kip$

Joists: $DL_{pilesjoist} := \frac{b_{joist} \cdot d_{joist} \cdot N_{joist} \cdot L_{span} \cdot DL_{wood}}{2}$ $DL_{pilesjoist} = 0.205 \cdot kip$

Caps: $DL_{pilescap} := \frac{b_{cap} \cdot d_{cap} \cdot 2 \cdot L_{cap} \cdot DL_{wood}}{2}$ $DL_{pilescap} = 0.128 \cdot kip$

Bracing: $L_{brace} := 0 \cdot ft$

$DL_{pilesbrace} := \frac{b_{xbrace} \cdot d_{xbrace} \cdot 2 \cdot L_{brace} \cdot DL_{wood}}{2}$ $DL_{pilesbrace} = 0 \cdot kip$

Railing:

Railtop (2 x 8) $b_{railtop} = 7.25 \cdot in$ $d_{railtop} = 1.5 \cdot in$

Rail (2 x 8) $b_{rail} = 1.5 \cdot in$ $d_{rail} = 7.25 \cdot in$

No. of Rails $N_{rails} := 4$

Vertical posts (4 x 4) $b_{post} = 5.5 \cdot in$ $d_{post} = 5.5 \cdot in$

No. of vertical posts per Span & Ht: $N_{railpost} := 3$ $H_{max} = 3.5\ ft$

$DL_{pilesrail} := L_{span} \cdot DL_{hdpe} \cdot \left[\left(b_{railtop} \cdot d_{railtop} \right) + N_{rails} \cdot \left(b_{rail} \cdot d_{rail} \right) \right] + N_{railpost} \cdot b_{post} \cdot d_{post} \cdot H_{max} \cdot DL_{wood}$ $DL_{pilesrail} = 0.288 \cdot kip$

$DL_{lightpost} := 0.251 \cdot kip$ (see light post calculations)

Piles: $L_{pile} := 25 \cdot ft$ "Estimated"

$dia_{pile} = 8 \cdot in$ Avg diameter

$DL_{pile} := DL_{wood} \cdot \frac{\pi \cdot dia_{pile}^{2}}{4} \cdot L_{pile}$

$DL_{pile} = 0.436 \cdot kip$

Service Dead Load:

$DL_{piles} := DL_{pilesdeck} + DL_{pilesjoist} + DL_{pilescap} + DL_{pilesbrace} + DL_{pilesrail} + DL_{pile} + DL_{lightpost}$

Service Live Load:

$LL_{piles} := LL_{ped} \cdot \frac{W_{deck} \cdot L_{span}}{2}$

$DL_{piles} = 1.54 \cdot kip$ $LL_{piles} = 3.6 \cdot kip$

$Pile_{service} := DL_{piles} + LL_{piles} = 5.143 \cdot kip$ Per LARSA Run = 4.393 kip Say Confirmed $Pile_{service} = 2.57 \cdot tons$

Factored Pile Axial Load (Strength 1)

$Pile_{factored} := 1.25 \cdot DL_{piles} + 1.75 \cdot LL_{piles} = 8.228 \cdot kip$ Per LARSA Run = 7.19 kip Say Confirmed $Pile_{factored} = 4.11 \cdot tons$

TIMBER PILE DESIGN

Wood Properties and Design Values [Ref. 2 - LRFD 8.4.1.4]

Grade 1 Southern Pine - Table 8.4.1.1-1

$F_{bo} := 2400psi$ $F_{co} := 1200psi$ $E_o := 1.5 \cdot 10^6 psi$

$\phi_b := 0.85$ $\phi_c := 0.9$ LRFD 8.5.2.2 For driving resistance $\phi_c = 1.15$ based on short load durations

Applicable Adjustment Factors [Ref 2 - LRFD 8.4.4]

Format Conversion Factor [8.4.4.2]

$C_{KF\_b} := \frac{2.5}{\phi_b}$ $C_{KF\_b} = 2.94$ For Bending

$C_{KF\_c} := \frac{2.1}{\phi_c}$ $C_{KF\_c} = 2.33$ For Compression Parallel To Grain

$C_M := 1.0$ Wet Service Factor [8.4.4.3]

$C_{iE} := 0.95$ Incising Factor [8.4.4.7] - Conserv.

$C_{ib} := 0.8$ Incising Factor [8.4.4.7] - Conserv.

$C_{ic} := 0.8$ Incising Factor [8.4.4.7] - Conserv.

$C_F := 1.0$ Size Factor [8.4.4.4]

$C_d := 1.0$ Deck Factor [8.4.4.8] - N/A

$C_{fu} := 1.0$ Flat Use Factor [8.4.4.6] - Load applied to narrow face- edgwise - N/A

$C_\lambda := 0.8$ Time Effect Factor [8.4.4.9] - (Strength 1)

Adjusted Design Values [Ref 2 - LRFD 8.4.4.1]

$F_b := F_{bo} \cdot C_{KF\_b} \cdot C_M \cdot C_F \cdot C_\lambda \cdot C_{fu} \cdot C_{ib} \cdot C_d$ $F_b = 4517.6 \cdot psi$

$F_c := F_{co} \cdot C_{KF\_c} \cdot C_M \cdot C_\lambda \cdot C_{ic}$ $F_c = 1792 \cdot psi$

$E := E_o \cdot C_M \cdot C_{iE}$ $E = 1425000 \cdot psi$

Compressive Capacity [Ref 2 - LRFD 8.8.1]

$K_{cE} := 0.52$ Visually graded lumber

$c_{pile} := 0.85$ Round timber piles

$K := 2$ Effective Length Factor

$L := 10.ft$ Max Unsupported Height

$L_e := K \cdot L$ $L_e = 20\,ft$

$$F_{cE} := \frac{K_{cE} \cdot E \cdot dia_{pile}^{2}}{L_e^{2}} \qquad F_{cE} = 823.3 \cdot psi \qquad B := \frac{F_{cE}}{F_c} \qquad B = 0.459$$

$$C_p := \frac{1 + B}{2 \cdot c_{pile}} - \sqrt{\left(\frac{1 + B}{2 \cdot c_{pile}}\right)^2 - \frac{B}{c_{pile}}} \qquad C_p = 0.415$$

$$A_g := \frac{\pi \cdot dia_{pile}^{2}}{4} \qquad A_g = 50.3 \cdot in^2 \qquad P_u := Pile_{factored} = 8.2 \cdot kip$$

$$P_r := \phi_c \cdot F_c \cdot A_g \cdot C_p \qquad P_r = 33.661 \cdot kip$$

Flexural Capacity [Ref 2 - LRFD 8.6.3]

Moment of Intertia of Pile

$$I_{pile} := \frac{\pi \cdot dia_{pile}^{4}}{64}$$

$$I_{pile} = 201.1 \cdot in^4$$

Section Modulus of Pile Section

$$S_{pile} := \frac{\pi \cdot dia_{pile}^{3}}{32} \qquad S_{pile} = 50.265 \cdot in^3$$

$$M_r := \phi_b \cdot F_b \cdot S_{pile} \qquad M_r = 16.085 \cdot kip \cdot ft$$

$$M_u := Pile_{factored} \cdot \Delta_c \qquad M_u = 0.061 \cdot kip \cdot ft$$

Combined Flexure and Compression Parallel to Grain Capacity [Ref 2 - LRFD 8.10.2]

$$\left(\frac{P_u}{P_r}\right)^2 + \frac{M_u}{M_r \cdot \left(1 - \frac{P_u}{F_{cE} \cdot A_g}\right)} = 0.065$$

$$Check_{10} := if\left[\left(\frac{P_u}{P_r}\right)^2 + \frac{M_u}{M_r \cdot \left(1 - \frac{P_u}{F_{cE} \cdot A_g}\right)} < 1.0, "OK", "NG"\right] \qquad Check_{10} = "OK"$$

DESIGN SUMMARY - USE GRADE No. 1 SOUTHERN PINE - 8" Ave. Dia. Piles

RAILING

Design Span

$Span_{rail} := 5 \cdot ft$

Applied Distributed Load

LL

Pedestrian distributed load (LRFD 13.8.2) $w_{llrail} := 50 \cdot plf$

Pedestrian concentrated load (LRFD 13.8.2) $P_{llrail} := 200 \cdot lbf$

MOMENT

LL

pedestrian distributed load moment $M_{llrail1} := \frac{w_{llrail} \cdot Span_{rail}^{2}}{8}$

$M_{llrail1} = 0.156 \cdot kip \cdot ft$

pedestrian concentrated load moment $M_{llrail2} := \frac{P_{llrail} \cdot Span_{rail}}{4}$

$M_{llrail2} = 0.25 \cdot kip \cdot ft$

Total LL moment: $M_{llrail} := M_{llrail1} + M_{llrail2}$

$M_{llrail} = 0.41 \cdot kip \cdot ft$

Factored Moment (Strength 1)

$M_{rail} := M_{llrail}$ $M_{rail} = 0.406 \cdot kip \cdot ft$

HDPE Design Values [Ref. - Attached]

ASTM D6109 - specify this requirement in plans - See attached for properties required for top and side rails

$F_b := 1200psi$ $E_o := 1.14 \cdot 10^{5} psi$

Net Dimension

Moment of Intertia Top Rail

$I_{railtop\_X} := \frac{1}{12} \cdot b_{railtop} \cdot d_{railtop}^{3}$ $I_{railtop\_X} = 2.039 \cdot in^{4}$ Section Modulus of Top Rail and side rails

$I_{railtop\_Y} := \frac{1}{12} \cdot d_{railtop} \cdot b_{railtop}^{3}$ $I_{railtop\_Y} = 47.635 \cdot in^{4}$ Section Modulus of Top Rail and side rails

$I_{railtop\_X} = 2.039 \cdot in^4$ $C_{railtop\_X} := \frac{d_{railtop}}{2}$ $C_{railtop\_X} = 0.75 \cdot in$ $S_{railtop\_X} := \frac{I_{railtop\_X}}{C_{railtop\_X}}$ $S_{railtop\_X} = 2.719 \cdot in^3$

$I_{railtop\_Y} = 47.635 \cdot in^4$ $C_{railtop\_Y} := \frac{b_{railtop}}{2}$ $C_{railtop\_Y} = 3.625 \cdot in$ $S_{railtop\_Y} := \frac{I_{railtop\_Y}}{C_{railtop\_Y}}$ $S_{railtop\_Y} = 13.141 \cdot in^3$

Flexural Capacity

$M_{r\_X} := S_{railtop\_X} \cdot F_b$ $M_{r\_X} = 0.27 \cdot kip \cdot ft$ $M_{rail} = 0.406 \cdot kip \cdot ft$

$M_{r\_Y} := S_{railtop\_Y} \cdot F_b$ $M_{r\_Y} = 1.314 \cdot kip \cdot ft$

$Check_{11} := if\left(\frac{M_{llrail1}}{M_{r\_X}} < 1.0 \wedge \frac{M_{rail}}{M_{r\_Y}} < 1.0, "OK", "NG"\right)$ $Check_{11} = "OK"$

RAILING POSTS

Design Span (Assume simple spans)

Design Length $L_{post} := H_{max} + d_{joist} + \frac{d_{cap}}{2} + d_{deck}$ $L_{post} = 5.03\ ft$

Pedestrian distributed load (LRFD 13.8.2) $w_{llrail} := 50 \cdot plf$

Pedestrian concentrated load (LRFD 13.8.2) $P_{llrail} := 200 \cdot lbf$

Applied Factored Moments and Shears

Service Moment

$M_{post} := w_{llrail} \cdot \frac{Span_{rail}}{2} \cdot (H_{max}) + \frac{P_{llrail}}{2} \cdot (H_{max})$ $M_{post} = 0.788\ ft \cdot kip$

Service Shear

$V_{post} := w_{llrail} \cdot \frac{Span_{rail}}{2} + \frac{P_{llrail}}{2}$ $V_{post} = 0.225 \cdot kip$

FACTORED MOMENT

$M_{post} := 1.75 \cdot M_{post}$ $M_{post} = 1.378 \cdot kip \cdot ft$

FACTORED SHEAR

$V_{post} := 1.75 \cdot V_{post}$ $V_{post} = 0.394 \cdot kip$

Wood Properties and Design Values [Ref. 2 - LRFD 8.4.1.1.4-1 & 8.5.2.2]

Grade 1 Southern Pine - 6 in wide

$F_{bo} := 1350psi$ $F_{cpo} := 565psi$ $E_o := 1.6 \cdot 10^6 psi$

$\phi_b := 0.85$ $\phi_{cpo} := 0.9$ LRFD 8.5.2.2

Net Dimensions [8.4.1.1.2] Section Modulus For Post

Centroid of Post $C_{post} := \frac{d_{post}}{2}$ $C_{cap} = 5.625 \cdot in$

Moment of Intertia of Post

$I_{post} := \frac{1}{12} \cdot b_{post} \cdot d_{post}^3$

$I_{post} = 76.255 \cdot in^4$

Section Modulus of Post Section

$S_{post} := \frac{I_{post}}{C_{post}}$ $S_{post} = 27.729 \cdot in^3$

Applicable Adjustment Factors [Ref 2 - LRFD 8.4.4]

Format Conversion Factor [8.4.4.2]

$C_{KF\_b} := \frac{2.5}{\phi_b}$ $C_{KF\_b} = 2.94$ For Bending

$C_{KF\_v} := \frac{2.1}{\phi_{cpo}}$ $C_{KF\_v} = 2.33$ For Shear (Compression Perpendicular To Grain)

$C_M := 1.0$ Wet Service Factor [8.4.4.3]

$C_{iE} := 0.95$ Incising Factor [8.4.4.7] - Conserv.

$C_{ib} := 0.8$ Incising Factor [8.4.4.7] - Conserv.

$C_{iv} := 0.8$ Incising Factor [8.4.4.7] - Conserv.

$C_F := 1.0$ Size Factor [8.4.4.4]

$C_d := 1.0$ Deck Factor [8.4.4.8] - N/A

$C_{fu} := 1.0$ Flat Use Factor [8.4.4.6] - Load applied to narrow face- edgwise - N/A

$C_\lambda := 0.8$ Time Effect Factor [8.4.4.9] - (Strength 1)

Adjusted Design Values [Ref 2 - LRFD 8.4.4.1]

$F_b := F_{bo} \cdot C_{KF\_b} \cdot C_M \cdot C_F \cdot C_\lambda \cdot C_{fu} \cdot C_{ib} \cdot C_d$ $F_b = 2541.2 \cdot psi$

$F_v := F_{cpo} \cdot C_{KF\_v} \cdot C_M \cdot C_\lambda \cdot C_{iv}$ $F_v = 843.7 \cdot psi$

$E := E_o \cdot C_M \cdot C_{iE}$ $E = 1520000 \cdot psi$

Flexural Capacity [Ref 2 - LRFD 8.6.1]

$K_{bE} := 0.76$ $R_b := \min\left(50, \sqrt{\frac{L_{post} \cdot d_{post}}{b_{post}^2}}\right)$ $R_b = 3.3$

$F_{bE} := \frac{K_{bE} \cdot E}{R_b^2}$ $F_{bE} = 105236 \cdot psi$ $A := \frac{F_{bE}}{F_b}$ $A = 41.412$

$$C_L := \frac{1 + A}{1.9} - \sqrt{\frac{(1 + A)^2}{3.61} - \frac{A}{0.95}}$$ $C_L = 0.999$

$M_r := \phi_b \cdot S_{post} \cdot F_b \cdot C_L$ $M_r = 4.985 \cdot kip \cdot ft$ $M_{post} = 1.378 \cdot kip \cdot ft$

$Check_{12} := if(M_r > M_{post}, "OK", "NG")$ $Check_{12} = "OK"$

Shear Capacity [LRFD 8.7]

$V_r := \frac{\phi_{cpo} \cdot F_v \cdot b_{post} \cdot d_{post}}{1.5}$ $V_r = 15.3 \cdot kip$ $V_{post} = 0.394 \cdot kip$

$Check_{13} := if(V_r < V_{post}, "NG", "OK")$ $Check_{13} = "OK"$

Check Deflection

$E_o = 1600000 \cdot psi$ AISC Beam Table simple span

$\Delta_p := \frac{V_{post} \cdot L_{post}^3}{3 \cdot E_o I_{post}}$ $\Delta_p = 0.237 \cdot in$

LL limit $\frac{L_{post}}{120} = 0.503 \cdot in$

$Check_{14} := if\left(\frac{V_{post} \cdot L_{post}^3}{3 \cdot E_o I_{post}} < \frac{L_{post}}{120}, "OK", "NG"\right)$ $Check_{14} = "OK"$

DESIGN SUMMARY - USE GRADE No. 1 SOUTHERN PINE - 6" x 6" RAILING POSTS

BOLT CHECK (Bolt at Cap controls)

Connections use a 1" Diameter A354 Grade BC Threaded rods for connections from cap to pile

1" Properties

$A_{bolt} := 0.606 \cdot in^2$

$f_y := 109 \cdot ksi$ $f_u := 120 \cdot ksi$

$D_{eff} := \sqrt{\frac{A_{bolt}}{\pi} \cdot 4} = 0.878 \cdot in$

$S_{rod} := \frac{\pi \cdot D_{eff}^3}{32} = 0.067 \cdot in^3$

Loads and factors

$Cap_{load} := \frac{Pile_{factored}}{2} = 4.114 \cdot kip$ Due to 2 caps

$\phi_s := 0.80$

$\phi_t := 0.80$

Factored Shear Resistance of Bolts (threads excluded in Shear Plane) (6.13.2.7-1)

$R_{shear} := \phi_s \cdot 0.56 \cdot A_{bolt} \cdot f_u = 32.579 \cdot kip$

Check the Bolt Shear Resistance

$$Check_{15} := \begin{cases} \text{"OK"} & \text{if } Cap_{load} < R_{shear} \\ \text{"FAILS IN SHEAR"} & \text{otherwise} \end{cases}$$

$Check_{15} = \text{"OK"}$

Stresses

$$\sigma_{tension} := \frac{\left(\frac{Cap_{load}}{2} \cdot \frac{b_{cap}}{2}\right)}{S_{rod}} = 54.103 \cdot ksi$$

Cap load divided by 2 for 2 bolts

Check the Bolt Tension

$$Check_{16} := \begin{cases} \text{"OK"} & \text{if } \sigma_{tension} < 0.9 f_y \\ \text{"FAILS IN TENSION"} & \text{otherwise} \end{cases}$$

$\frac{\sigma_{tension}}{f_y} = 0.496$

$Check_{16} = \text{"OK"}$

Factored Tensile Resistance of Bolt under combined Tension and Shear (6.13.2.11-1 & 6.13.2.11-2)

$$R_n := \frac{R_{shear}}{\phi_s}$$

Nominal shear resistance

$$T_n := \begin{cases} \phi_t \cdot 0.76 \cdot A_{bolt} \cdot f_u & \text{if } \frac{Cap_{load}}{R_n} \le 0.33 \\ \left[\phi_t \cdot 0.76 \cdot A_{bolt} \cdot f_u \cdot \sqrt{1 - \left(\frac{Cap_{load}}{\phi_s \cdot R_n}\right)^2}\right] & \text{otherwise} \end{cases}$$

$T_n = 44.214 \cdot kip$

Check the Bolt Resistance under Combined Tension and Shear

$$T_u := \sigma_{tension} \cdot A_{bolt} = 32.787 \cdot kip$$

$$Check_{17} := \begin{cases} \text{"OK"} & \text{if } T_u < T_n \\ \text{"FAILS COMB. TENS. \& SHEAR"} & \text{otherwise} \end{cases}$$

$Check_{17} = \text{"OK"}$

WET WEIGHT = 1400 LB
PAYLOAD = 1646 LB

3046 LB / 4 WHEELS = 762LB

USE 825 LB (8% INCREASE)

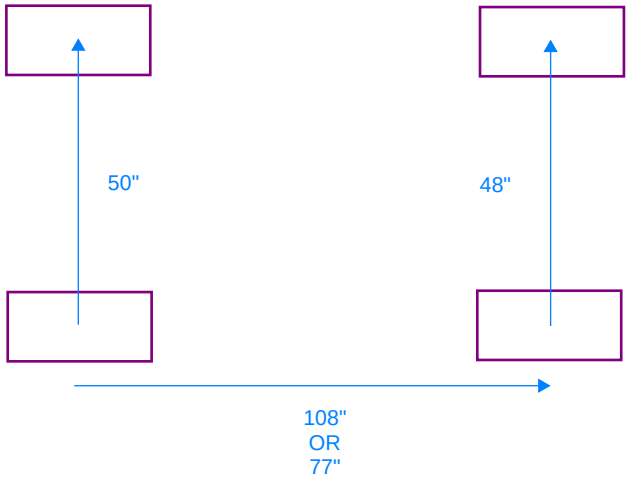

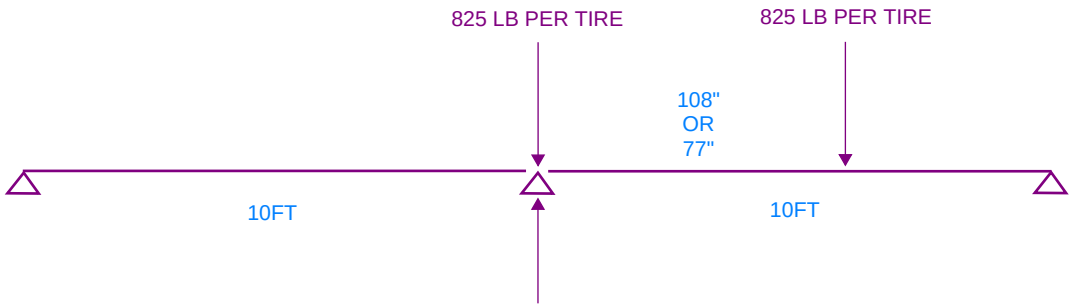

825 + 825 X (10FT - 77"/12) / 10FT = 1120 LB (use this as is a bit conservative for joist design)

825 + 825 X (10FT - 108"/12) / 10FT = 908 LB

LOAD INPUTS FOR LARSA MODEL FOR CAP DESIGN AND TIMBER PILE LOAD VERIFICATION

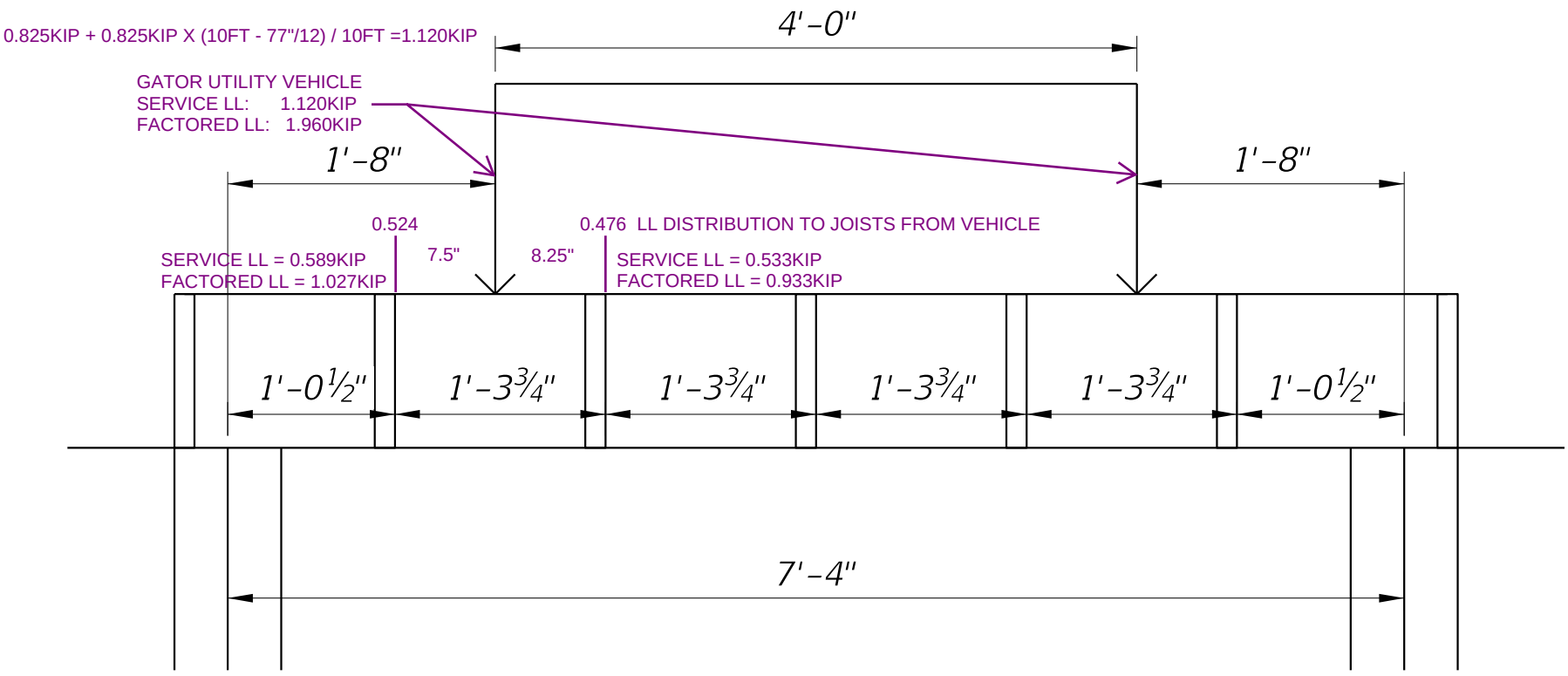

SERVICE
DL REACTIONS INTERIOR JOISTS = Rcapdl = 0.062 KIP
DL REACTIONS EXTERIOR JOISTS = Rcapdl/2 + (Nrailpost/2 x bpost x dpost x Hmax x DLwood) + (Lspan/2 x DLhdpe x [(brailtop x drailtop) + Nrails x (brail x drail)] = 0.146 KIP

FACTORED
DL REACTIONS INTERIOR JOISTS = 0.078 KIP
DL REACTIONS EXTERIOR JOISTS = 0.175 KIP

LL DUE TO PEDESTRIAN LOADING

SERVICE
LL REACTIONS INTERIOR JOISTS = 90PSF X 5FT X (1.31FT) = 0.590 KIP
LL REACTIONS EXTERIOR JOISTS = 0.295 KIP

FACTORED
LL REACTIONS INTERIOR JOISTS = 1.033 KIP
LL REACTIONS EXTERIOR JOISTS = 0.517 KIP

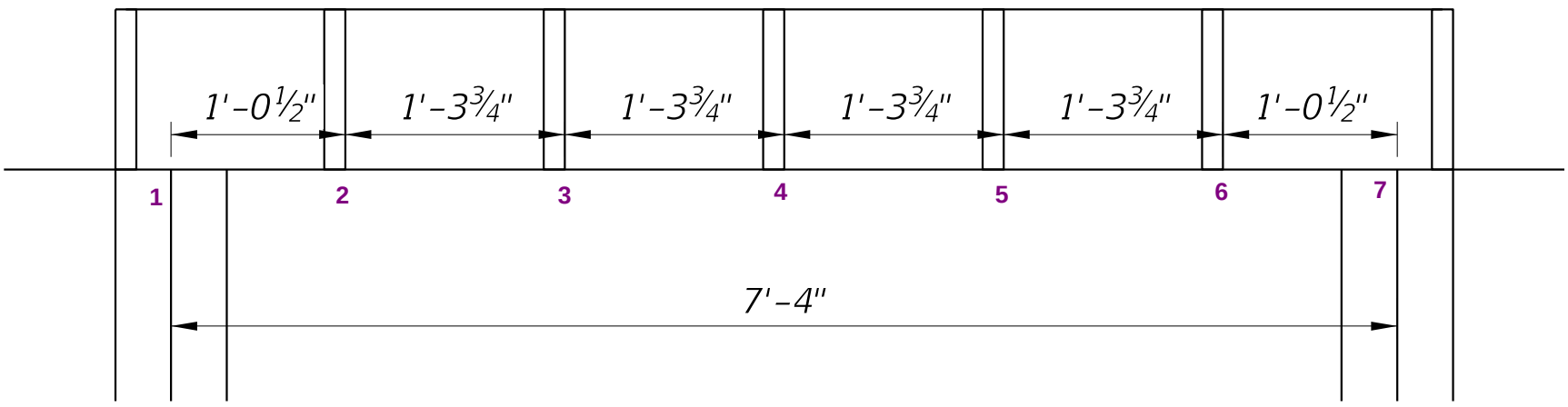

NODE LOCATIONS:
1 - 0
2 - 1.042 FT
3 - 2.354 FT
4 - 3.667 FT
5 - 4.979 FT
6 - 6.292 FT
7 - 7.333 FT

Graphics View 1

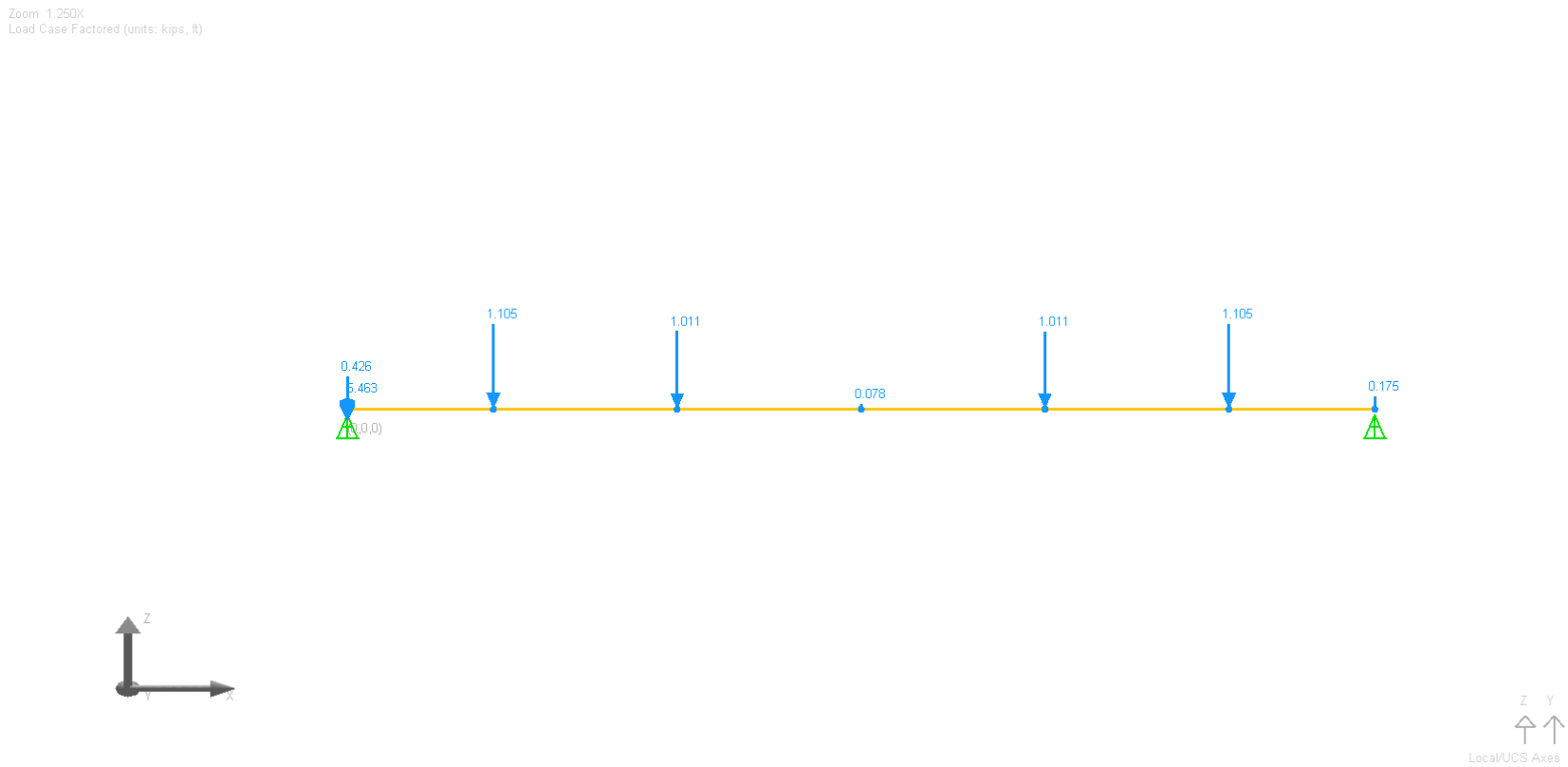

INPUT : Material Properties

Name	Modulus of Elasticity (kips/in²)	Poisson Ratio	Shear Modulus (kips/in²)	Unit Weight (kips/in³)	Thermal Expansion (1/ °F *10^-6)	Assigned
Pine, Eastern White	1,060.00	0.0000	530.00	0.0000	0.000000	Yes

INPUT : Sections

Name	Section Area (in²)	Shear Area in yy (in²)	Shear Area in zz (in²)	Torsion Constant (in^4)	Inertia Izz (in^4)	Inertia Iyy (in^4)	Plastic Modulus Zyy (in³)	Plastic Modulus Zzz (in³)	Perimeter (in)	Material Time-Effect	Ductility	Residual Strength (%)	Assigned
Rectangle	100.0000	83.3333	83.3333	1,410.0000	833.3333	833.3333	0.0000	0.0000	40.0000	(NONE)	50.	0.	Yes

INPUT : Section Stress Points

Name	Point 1 Y (in)	Point 1 Z (in)	Point 2 Y (in)	Point 2 Z (in)	Point 3 Y (in)	Point 3 Z (in)	Point 4 Y (in)	Point 4 Z (in)	Point 5 Y (in)	Point 5 Z (in)	Point 6 Y (in)	Point 6 Z (in)
Rectangle	5.0000	5.0000	5.0000	-5.0000	-5.0000	-5.0000	-5.0000	5.0000	(NONE)	(NONE)	(NONE)	(NONE)

INPUT : Section Dimensions

Name	Shape	Dimension D1	Dimension D2	Dimension D3	Dimension D4	Dimension D5	Dimension D6
Rectangle	Rectangle	10.0000	10.0000				

INPUT : Joints

ID	X (ft)	Y (ft)	Z (ft)	Translation DOF	Rotation DOF	Displacement UCS	Assignment
1	0.0000	0.0000	0.0000	all fixed	all free	Global	Yes
2	1.0420	0.0000	0.0000	all free	all free	Global	Yes
3	2.3540	0.0000	0.0000	all free	all free	Global	Yes
4	3.6670	0.0000	0.0000	all free	all free	Global	Yes
5	4.9790	0.0000	0.0000	all free	all free	Global	Yes
6	6.2920	0.0000	0.0000	all free	all free	Global	Yes
7	7.3330	0.0000	0.0000	all fixed	all free	Global	Yes

INPUT : Members

ID	I-Joint	J-Joint	Span	Type	Section at Start	Section at End	Material	Prestress Force (kips)	Length (ft)	Rigid Zone from Start (x/L)	Rigid Zone from End (x/L)	Orientation Angle (deg)	Casting (day)	Structure Group
1	1	2	-	Beam	Rectangle	(same as start)	Pine, Eastern	0.0000	1.042	0.0000	0.0000	0.0000	0	(none)
2	2	3	-	Beam	Rectangle	(same as start)	Pine, Eastern	0.0000	1.312	0.0000	0.0000	0.0000	0	(none)
3	3	4	-	Beam	Rectangle	(same as start)	Pine, Eastern	0.0000	1.313	0.0000	0.0000	0.0000	0	(none)
4	4	5	-	Beam	Rectangle	(same as start)	Pine, Eastern	0.0000	1.312	0.0000	0.0000	0.0000	0	(none)
5	5	6	-	Beam	Rectangle	(same as start)	Pine, Eastern	0.0000	1.313	0.0000	0.0000	0.0000	0	(none)
6	6	7	-	Beam	Rectangle	(same as start)	Pine, Eastern	0.0000	1.041	0.0000	0.0000	0.0000	0	(none)

INPUT : Member End Offsets

ID	I-Offset X (ft)	I-Offset Y (ft)	I-Offset Z (ft)	J-Offset X (ft)	J-Offset Y (ft)	J-Offset Z (ft)
1	0.0000	0.0000	0.0000	0.0000	0.0000	0.0000
2	0.0000	0.0000	0.0000	0.0000	0.0000	0.0000
3	0.0000	0.0000	0.0000	0.0000	0.0000	0.0000
4	0.0000	0.0000	0.0000	0.0000	0.0000	0.0000
5	0.0000	0.0000	0.0000	0.0000	0.0000	0.0000
6	0.0000	0.0000	0.0000	0.0000	0.0000	0.0000

INPUT : More Material Properties

Name	Yield Stress (kips/in²)	Post-yield to Initial Slope Ratio	Concrete Strength Specimen	Concrete Fck or Steel Fu (kips/in²)	Concrete Cement Hardening Type	Tendon GUTS (kips/in²)	Material Time-Effect	Assigned
Pine, Eastern White	7.60	0.020	Cylinder	0.00	Not Concrete	0.00	(NONE)	Yes

Load Cases

ID	Name	Analysis Type	Class	Status	Weight Factor X	Weight Factor Y	Weight Factor Z	Is Dynamic Mass?	Assigned to Load Combinati	# of Joint Loads	# of Support Loads	# of Member Loads	# of Member Thermal	# of Plate Loads	# of Moving Loads	# of THA Loading	# of THA Initial
2	Service	Static	None	Active	0.0000	0.0000	0.0000	No	No	7	0	0	0	0	0	0	0
3	Factored	Static	None	Active	0.0000	0.0000	0.0000	No	No	7	0	0	0	0	0	0	0

LOAD CASE Service, Joint Loads

Joint	X-Force (kips)	Y-Force (kips)	Z-Force (kips)	X-Moment (kips-ft)	Y-Moment (kips-ft)	Z-Moment (kips-ft)
1	0.0000	0.0000	-0.3970	5.4630	0.0000	0.0000
2	0.0000	0.0000	-0.6510	0.0000	0.0000	0.0000
3	0.0000	0.0000	-0.5950	0.0000	0.0000	0.0000
4	0.0000	0.0000	-0.0620	0.0000	0.0000	0.0000
6	0.0000	0.0000	-0.6510	0.0000	0.0000	0.0000
7	0.0000	0.0000	-0.1460	0.0000	0.0000	0.0000
5	0.0000	0.0000	-0.5950	0.0000	0.0000	0.0000

LOAD CASE Factored, Joint Loads

Joint	X-Force (kips)	Y-Force (kips)	Z-Force (kips)	X-Moment (kips-ft)	Y-Moment (kips-ft)	Z-Moment (kips-ft)
1	0.0000	0.0000	-0.4260	5.4630	0.0000	0.0000
2	0.0000	0.0000	-1.1050	0.0000	0.0000	0.0000
3	0.0000	0.0000	-1.0110	0.0000	0.0000	0.0000
4	0.0000	0.0000	-0.0780	0.0000	0.0000	0.0000
6	0.0000	0.0000	-1.1050	0.0000	0.0000	0.0000
7	0.0000	0.0000	-0.1750	0.0000	0.0000	0.0000
5	0.0000	0.0000	-1.0110	0.0000	0.0000	0.0000

RESULTS FOR VEHICLE LOADING

SERVICE - CAP MOMENT

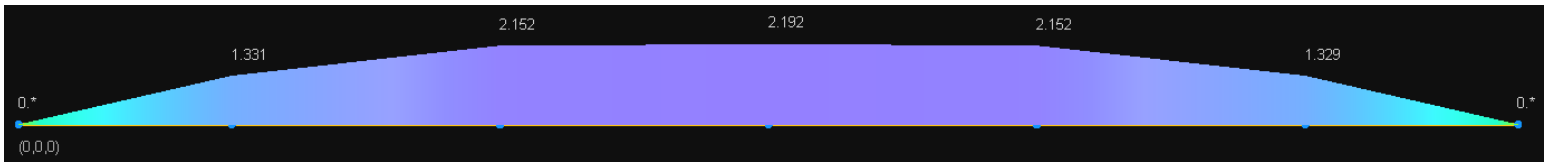

FACTORED - CAP MOMENT

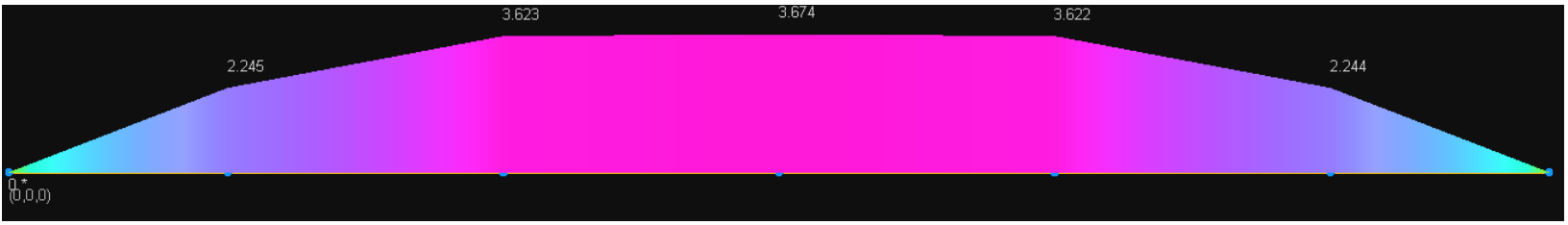

SERVICE - CAP SHEAR



FACTORED - CAP SHEAR

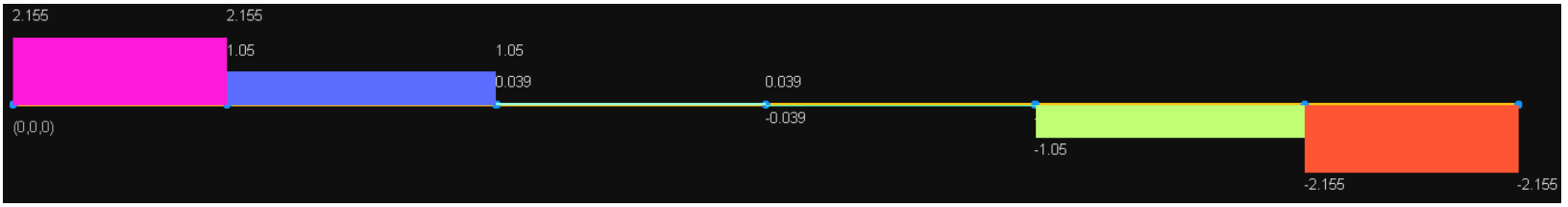

SERVICE - REACTION



FACTORED - REACTION



Graphics View 1

Zoom 1.250X
Load Case Factored (units: kips, ft)

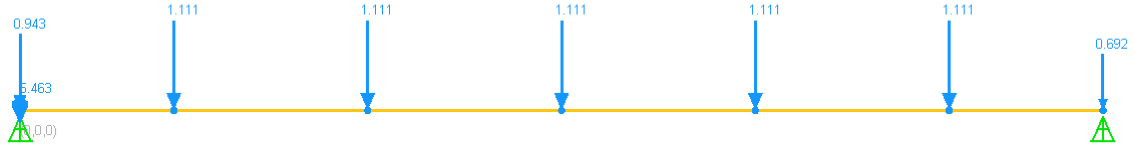

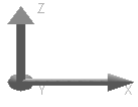



INPUT : Material Properties

Name	Modulus of Elasticity (kips/in²)	Poisson Ratio	Shear Modulus (kips/in²)	Unit Weight (kips/in³)	Thermal Expansion (1/ °F *10^-6)	Assigned
Pine, Eastern White	1,060.00	0.0000	530.00	0.0000	0.000000	Yes

INPUT : Sections

Name	Section Area (in²)	Shear Area in yy (in²)	Shear Area in zz (in²)	Torsion Constant (in^4)	Inertia Izz (in^4)	Inertia Iyy (in^4)	Plastic Modulus Zyy (in³)	Plastic Modulus Zzz (in³)	Perimeter (in)	Material Time-Effect	Ductility	Residual Strength (%)	Assigned
Rectangle	100.0000	83.3333	83.3333	1,410.0000	833.3333	833.3333	0.0000	0.0000	40.0000	(NONE)	50.	0.	Yes

INPUT : Section Stress Points

Name	Point 1 Y (in)	Point 1 Z (in)	Point 2 Y (in)	Point 2 Z (in)	Point 3 Y (in)	Point 3 Z (in)	Point 4 Y (in)	Point 4 Z (in)	Point 5 Y (in)	Point 5 Z (in)	Point 6 Y (in)	Point 6 Z (in)
Rectangle	5.0000	5.0000	5.0000	-5.0000	-5.0000	-5.0000	-5.0000	5.0000	(NONE)	(NONE)	(NONE)	(NONE)

INPUT : Section Dimensions

Name	Shape	Dimension D1	Dimension D2	Dimension D3	Dimension D4	Dimension D5	Dimension D6
Rectangle	Rectangle	10.0000	10.0000				

INPUT : Joints

ID	X (ft)	Y (ft)	Z (ft)	Translation DOF	Rotation DOF	Displacement UCS	Assignment
1	0.0000	0.0000	0.0000	all fixed	all free	Global	Yes
2	1.0420	0.0000	0.0000	all free	all free	Global	Yes
3	2.3540	0.0000	0.0000	all free	all free	Global	Yes
4	3.6670	0.0000	0.0000	all free	all free	Global	Yes
5	4.9790	0.0000	0.0000	all free	all free	Global	Yes
6	6.2920	0.0000	0.0000	all free	all free	Global	Yes
7	7.3330	0.0000	0.0000	all fixed	all free	Global	Yes

INPUT : Members

ID	I-Joint	J-Joint	Span	Type	Section at Start	Section at End	Material	Prestress Force (kips)	Length (ft)	Rigid Zone from Start (x/L)	Rigid Zone from End (x/L)	Orientation Angle (deg)	Casting (day)	Structure Group
1	1	2	-	Beam	Rectangle	(same as start)	Pine, Eastern	0.0000	1.042	0.0000	0.0000	0.0000	0	(none)
2	2	3	-	Beam	Rectangle	(same as start)	Pine, Eastern	0.0000	1.312	0.0000	0.0000	0.0000	0	(none)
3	3	4	-	Beam	Rectangle	(same as start)	Pine, Eastern	0.0000	1.313	0.0000	0.0000	0.0000	0	(none)
4	4	5	-	Beam	Rectangle	(same as start)	Pine, Eastern	0.0000	1.312	0.0000	0.0000	0.0000	0	(none)
5	5	6	-	Beam	Rectangle	(same as start)	Pine, Eastern	0.0000	1.313	0.0000	0.0000	0.0000	0	(none)
6	6	7	-	Beam	Rectangle	(same as start)	Pine, Eastern	0.0000	1.041	0.0000	0.0000	0.0000	0	(none)

INPUT : Member End Offsets

ID	I-Offset X (ft)	I-Offset Y (ft)	I-Offset Z (ft)	J-Offset X (ft)	J-Offset Y (ft)	J-Offset Z (ft)
1	0.0000	0.0000	0.0000	0.0000	0.0000	0.0000
2	0.0000	0.0000	0.0000	0.0000	0.0000	0.0000
3	0.0000	0.0000	0.0000	0.0000	0.0000	0.0000
4	0.0000	0.0000	0.0000	0.0000	0.0000	0.0000
5	0.0000	0.0000	0.0000	0.0000	0.0000	0.0000
6	0.0000	0.0000	0.0000	0.0000	0.0000	0.0000

INPUT : More Material Properties

Name	Yield Stress (kips/in²)	Post-yield to Initial Slope Ratio	Concrete Strength Specimen	Concrete Fck or Steel Fu (kips/in²)	Concrete Cement Hardening Type	Tendon GUTS (kips/in²)	Material Time-Effect	Assigned
Pine, Eastern White	7.60	0.020	Cylinder	0.00	Not Concrete	0.00	(NONE)	Yes

Load Cases

ID	Name	Analysis Type	Class	Status	Weight Factor X	Weight Factor Y	Weight Factor Z	Is Dynamic Mass?	Assigned to Load Combinati	# of Joint Loads	# of Support Loads	# of Member Loads	# of Member Thermal	# of Plate Loads	# of Moving Loads	# of THA Loading	# of THA Initial
2	Service	Static	None	Active	0.0000	0.0000	0.0000	No	No	7	0	0	0	0	0	0	0
3	Factored	Static	None	Active	0.0000	0.0000	0.0000	No	No	7	0	0	0	0	0	0	0

LOAD CASE Service, Joint Loads

Joint	X-Force (kips)	Y-Force (kips)	Z-Force (kips)	X-Moment (kips-ft)	Y-Moment (kips-ft)	Z-Moment (kips-ft)
1	0.0000	0.0000	-0.6920	5.4630	0.0000	0.0000
2	0.0000	0.0000	-0.6520	0.0000	0.0000	0.0000
3	0.0000	0.0000	-0.6520	0.0000	0.0000	0.0000
4	0.0000	0.0000	-0.6520	0.0000	0.0000	0.0000
6	0.0000	0.0000	-0.6520	0.0000	0.0000	0.0000
7	0.0000	0.0000	-0.4410	0.0000	0.0000	0.0000
5	0.0000	0.0000	-0.6520	0.0000	0.0000	0.0000

LOAD CASE Factored, Joint Loads

Joint	X-Force (kips)	Y-Force (kips)	Z-Force (kips)	X-Moment (kips-ft)	Y-Moment (kips-ft)	Z-Moment (kips-ft)
1	0.0000	0.0000	-0.9430	5.4630	0.0000	0.0000
2	0.0000	0.0000	-1.1110	0.0000	0.0000	0.0000
3	0.0000	0.0000	-1.1110	0.0000	0.0000	0.0000
4	0.0000	0.0000	-1.1110	0.0000	0.0000	0.0000
6	0.0000	0.0000	-1.1110	0.0000	0.0000	0.0000
7	0.0000	0.0000	-0.6920	0.0000	0.0000	0.0000
5	0.0000	0.0000	-1.1110	0.0000	0.0000	0.0000

RESULTS FOR PEDESTRIAN LOADING

SERVICE - CAP MOMENT



FACTORED - CAP MOMENT

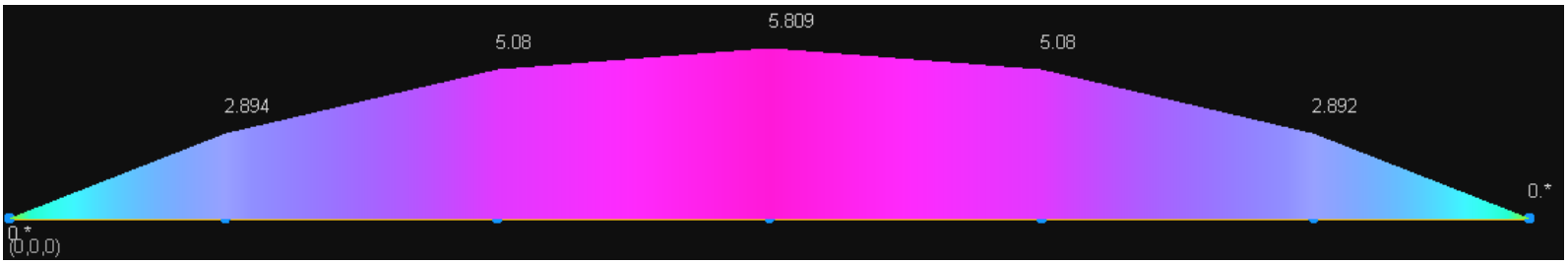

SERVICE - CAP SHEAR

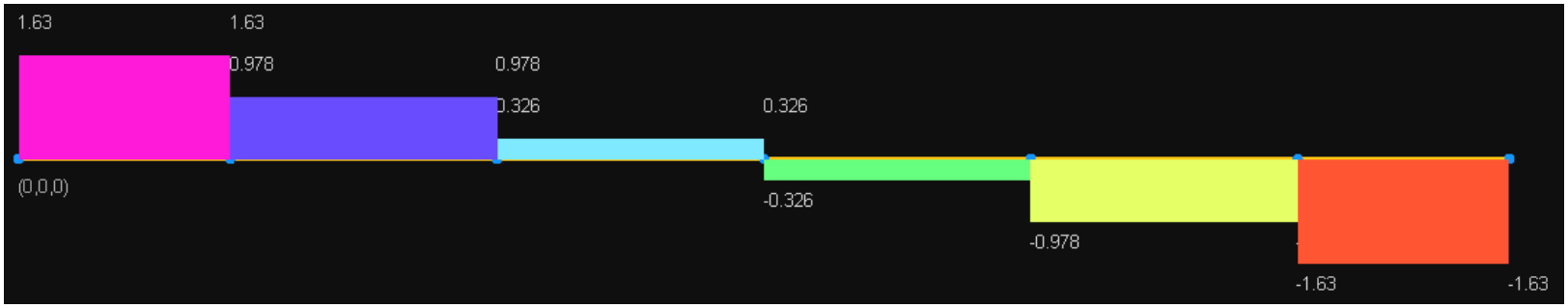

FACTORED - CAP SHEAR

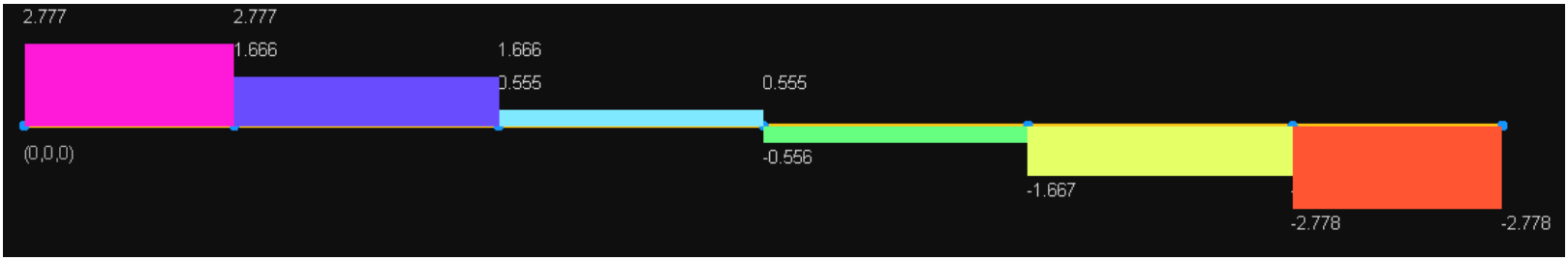

SERVICE - REACTION



FACTORED - REACTION



LIGHT POST CALCULATIONS

FLORIDA BRIDGE AND TRANSPORTATION INC.

JOB# 21-31 SHEET# 1
PROJECT NAME: Sun Trail
SUBJECT: Square Wood Post
POLE ID/STATION: 13' Mounting Height
CALCULATED BY: ADB DATE: Mar-24
CHECKED BY: MN DATE: Mar-24

SQUARE WOOD POST LUMINAIRE DESIGN

WIND SPEED: (SDG Table 2.4.1-1 Basic Wind Speed)

Wind Pressure Design Criteria as per AASHTO LRFD Specifications for Structural Supports for Highway Signs, Luminaires, and Traffic Signals, First Edition 2015 (LRFDLTS-1):

(LRFDLTS-1 3.8.1) Wind Pressure = $0.00256*K_z*K_d*G*V^2*C_d$

Height & Exposure Factor =	K_z	(LRFDLTS-1, Table C3.8.4-1)
Directionality Factor =	K_d	(LRFDLTS-1, Table 3.8.5-1)
Gust Effect Factor=	G	(LRFDLTS-1, Section 3.8.6)
Drag Coefficient =	C_d	(LRFDLTS-1, Table 3.8.7-1)

County:	Volusia		
Mean Recurrence Interval (MRI):	300	year	(Typically 10, 300, or 700 years for FDOT projects)
Design Wind Speed:	150	mph	
Basic Wind Speed:	140	mph	(FDOT Modifications to LRFDLTS-1, Section 3.8.2)
Pole Exposed Height=	12.00	ft	
Pole Size at Top=	5.50	in	
Taper =	0.0000	in/ft	
Total Pole Length =	12.00	ft	
Average Exposed Pole Width =	5.50	in	
Center of Exposed Height =	6.00	ft	

Wind Load Analysis (Pole)

Segment ID		Z Height above Ground (ft)	K_z Height Coefficient	K_d Directionality Factor	G Gust Factor	V Wind Velocity (mph)	P_z Wind Pressure (without drag coefficient) (psf)	Pole Taper (in/ft)	Pole Size (in)	Avg Dia. (in)	Corner Radius	Cd Drag Coeff.	Exposed Area of Segment (sf)	Pressure on Segment (Includes Drag Coefficient) (psf)	Wind Force on Segment (kip)	Moment Arm to Base (ft)	Wind Moment Acting at Base of Pole (ft*kip)
I	Bottom	4	0.84	0.90	1.14	140	43.24	0.000	5.50	5.50	N/A	2.000	5.04	86.49	0.44	9.50	4.14
	Top	15							5.50								
I	Bottom	15	0.90	0.90	1.14	140	46.33	5.500	5.50	5.50	N/A	2.000	0.46	92.67	0.04	15.50	0.66
	Top	16.0							5.50								
Subtotal (Pole only)															**0.48**	10.03	**4.80**

Wind Load Analysis (Attachments)

Description	Mounting Height (ft)	K_z Height Coefficient	K_d Directionality Factor	G Gust Factor	V Wind Velocity (mph)	Cd Drag Coeff.	Pressure on Segment (Includes Drag Coefficient) (psf)	Member Width (in)	Member Depth (in)	Member Length (in)	Exposed Area (sf)	No. of Equipment	Applied Wind Force (kip)	Moment Arm to Base (ft)	Wind Moment Acting at Base of Pole (ft*kip)
Luminaire	14.5	0.84	0.95	1.14	140	1.000	45.65	-	-	-	1.00	1	0.05	14.50	0.66
Subtotal (Att. Only)													**0.05**		**0.66**

FACTORED DESIGN LOADS

Pole Trans. Moment at Base (Wind) =	**5.463**	kip-ft
Pole Trans. Shear at Base (Wind) =	**0.524**	kip
Axial Load (Dead) =	**0.251**	kip
Pole Long. Moment at Base (Dead) =	**0.000**	kip-ft
Torsion (Wind) =	**0.000**	kip-ft

	75% WL:
Pole Trans. Moment at Base (Wind) =	4.097
Pole Trans. Shear at Base (Wind) =	0.393
Torsion (Wind) =	0.000

Pole Thickness =	**5.50**	in
Pole Volume =	**2.52**	ft^3
Pole Unit Weight =	**40**	pcf
Pole Weight =	**101**	lbs
Luminaire Weight =	**75**	lbs
Arm Tube Weight =	**25**	lbs
Arm Length =	**0**	ft

BRIDGE-MOUNTED LIGHT POST ANALYSIS - In accordance with:

1) AASHTO LRFD Guide Specifications for the Design of Pedestrian Bridges - December 2009
2) AASHTO LRFD Bridge Design Specifications - 9th Edition - 2020
3) National Design Specifications for Wood Construction (NDS) - 2018 Edition

DESIGN LOADS (Factored from Wind Load Calculations)

AXIAL LOAD: $P_u := 0.251 \cdot kip$

FLEXURAL LOAD: $M_u := 5.463 \cdot kip \cdot ft$

Southern Pine - Select Structural 6" x 6"

Bending Design Value: $F_{bo} := 2.1 \cdot ksi$

Compression Design Value: $F_{co} := 1.8 \cdot ksi$

Resistance Factor: $\phi := 0.85$

Modulus of Elasticity: $E_o := 1800 \cdot ksi$

MEMBER PROPERTIES EFFECTIVE SIZES

Member (Nom Size)	Horizontal Dimension	Vertical Dimension
LIGHT POST (6 x 6)	$b_{post} := 5.5 \cdot in$	$d_{post} := 5.5 \cdot in$

Gross Section Area: $A_g := b_{post} \cdot d_{post}$

Post Height: $L := 11 \cdot ft$

Effective Length Factor: $K := 2.1$

Effective Length: $L_e := K \cdot L = 277.2 \cdot in$

Section Modulus: $S_p := b_{post} \cdot \frac{d_{post}^2}{6}$

Applicable Adjustment Factors [Ref 2 - LRFD 8.4.4]

Format Conversion Factor [8.4.4.2]

$C_{KF\_b} := \frac{2.5}{\phi}$ $C_{KF\_b} = 2.94$ For Bending

$C_{KF\_v} := C_{KF\_b}$ $C_{KF\_v} = 2.94$ For Shear

$C_M := 1.0$ Wet Service Factor [8.4.4.3]

$C_i := 0.8$ Incising Factor [8.4.4.7] - Conserv.

$C_F := 1.0$ Size Factor [8.4.4.4]

$C_L := 1.0$ Beam Stability Factor [8.6.2]

$C_{fu} := 1.0$ Flat Use Factor [8.4.4.6] - Load applied to narrow face- edgwise - N/A

$C_d := 1.0$ Factor [8.4.4.8] - N/A

$C_\lambda := 0.8$ Time Effect Factor [8.4.4.9] - (Strength 1)

$C_t := 1.0$ Temperature Factor [REF 3-5.3.4]

Adjusted Design Values [Ref 2 - LRFD 8.4.4.1]

$F_b := F_{bo} \cdot C_{KF\_b} \cdot C_M \cdot C_F \cdot C_\lambda \cdot C_{fu} \cdot C_i \cdot C_d$ $F_b = 3.953 \cdot ksi$

$F_c := \left(F_{co} \cdot C_{KF\_v} \cdot C_M \cdot C_i \cdot C_\lambda\right)$ $F_c = 3.388 \cdot ksi$

$E := E_o \cdot C_M \cdot C_i$ $E = 1440 \cdot ksi$

Flexural Capacity [Ref 2 - LRFD 8.6.1]

$M_r := \phi \cdot F_b \cdot S_p \cdot C_L$ $M_r = 7.764 \cdot kip \cdot ft$ $M_u = 5.463 \cdot kip \cdot ft$

$Check_1 := if(M_r > M_u, "OK", "NG")$ $Check_1 = "OK"$

$M_r := S_p \cdot F_b$ $M_r = 9.134 \cdot kip \cdot ft$ $M_u = 5.463 \cdot kip \cdot ft$

$Check_2 := if(M_r > M_u, "OK", "NG")$ $Check_2 = "OK"$

Compressive Capacity [Ref 2 - LRFD 8.8.1]

Column Stability Factor [8.8.2-2]

$K_{cE} := 0.52$ Euler Buckling Coefficient $c_1 := 0.8$ coefficient for sawn lumber

$F_{ce} := \frac{K_{cE} \cdot E \cdot d_{post}^2}{L_e^2}$ Euler Bucking Stress

$B := \frac{F_{ce}}{F_c} = 0.087$ Beam Stability Factor [8.6.2]

$C_p := \frac{1 + B}{2c_1} - \left[\left(\frac{1 + B}{2c_1}\right)^2 - \frac{B}{c_1}\right]^{0.5}$ $C_p = 0.085$

$P_r := \phi \cdot F_c \cdot A_g \cdot C_p$ $M_r = 9.134 \cdot kip \cdot ft$ $M_u = 5.463 \cdot kip \cdot ft$

$Check_1 := if(M_r > M_u, "OK", "NG")$ $Check_1 = "OK"$

$M_r := S_p \cdot F_b$ $M_r = 9.134 \cdot kip \cdot ft$ $M_u = 5.463 \cdot kip \cdot ft$

$Check_2 := if(M_r > M_u, "OK", "NG")$ $Check_2 = "OK"$

Combined Flexure and Compression [Ref 2 - LRFD 8.10.2]

$$Check_3 := if\left[1.0 > \left(\frac{P_u}{P_r}\right)^2 + \frac{M_u}{M_r\left(1 - \frac{P_u}{F_{ce} \cdot A_g}\right)}, "OK", "NG"\right]$$ $Check_3 = "OK"$

$$\left(\frac{P_u}{P_r}\right)^2 + \frac{M_u}{M_r\left(1 - \frac{P_u}{F_{ce} \cdot A_g}\right)} = 0.617$$

Connection Design (Bolts connecting light post and Pile Cap Beam)

Connections use a 7/8" Diameter A354 Grade BC Threaded rods for connections from cap to pile

7/8" Properties

$A_{bolt} := 0.462 \cdot in^2$

$f_y := 109 \cdot ksi$ $f_u := 120 \cdot ksi$

$D_{eff} := \sqrt{\frac{A_{bolt}}{\pi} \cdot 4} = 0.767 \cdot in$

$S_{rod} := \frac{\pi \cdot D_{eff}^3}{32} = 0.044 \cdot in^3$

$Sp_{rod} := 3 \cdot in$

MEMBER PROPERTIES

Member (Nom Size)	Horizontal Dimension	Vertical Dimension
PILE CAP BEAM (4 x 12)	$b_{pcb} := 3.5 \cdot in$	$d_{pcb} := 11.25 \cdot in$

EFFECTIVE SIZES

Section Modulus: $S_{pcb} := b_{pcb} \cdot \frac{d_{pcb}^2}{6}$ $S_{pcb} = 73.828 \cdot in^3$

$\phi_s := 0.80$ $\phi_t := 0.80$

Factored Shear Resistance of Bolts (threads excluded in Shear Plane) (6.13.2.7-1)

$R_{shear} := \phi_s \cdot 0.56 \cdot A_{bolt} \cdot f_u = 24.837 \cdot kip$

Check the Bolt Shear Resistance

$V_z := P_u \cdot \frac{\left(\frac{b_{pcb} + b_{post}}{2}\right)}{Sp_{rod}} = 0.377 \cdot kip$

$V_x := \frac{M_u}{Sp_{rod}} = 21.852 \cdot kip$

$T_x := \frac{M_u}{Sp_{rod}} = 21.852 \cdot kip$

$V_{bolt} := \left(V_z^2 + V_x^2\right)^{0.5} = 21.855 \cdot kip$ Combined Longitudinal & Transverse Wind Shear

$Check_{15} := \begin{cases} \text{"OK"} & \text{if } V_{bolt} < R_{shear} \\ \text{"FAILS IN SHEAR"} & \text{otherwise} \end{cases}$

$Check_{15} = \text{"OK"}$

$\sigma_{tension} := \frac{\left(\frac{T_x}{2}\right)}{A_{bolt}} = 23.649 \cdot ksi$ divided by 2 for 2 bolts

Check the Bolt Tension

$Check_{16} := \begin{cases} \text{"OK"} & \text{if } \sigma_{tension} < 0.9 f_y \\ \text{"FAILS IN TENSION"} & \text{otherwise} \end{cases}$ $\frac{\sigma_{tension}}{f_y} = 0.217$

$Check_{16} = \text{"OK"}$

Factored Tensile Resistance of Bolt under combined Tension and Shear (6.13.2.11-1 & 6.13.2.11-2)

$$R_n := \frac{R_{shear}}{\phi_s}$$ Nominal shear resistance

$$T_n := \begin{cases} \phi_t \cdot 0.76 \cdot A_{bolt} \cdot f_u & \text{if } \frac{V_{bolt}}{R_n} \le 0.33 \\ \left[\phi_t \cdot 0.76 \cdot A_{bolt} \cdot f_u \cdot \sqrt{1 - \left(\frac{V_{bolt}}{\phi_s \cdot R_n} \right)^2} \right] & \text{otherwise} \end{cases}$$

$T_n = 16.014 \cdot kip$

Check the Bolt Resistance under Combined Tension and Shear

$T_u := \sigma_{tension} \cdot A_{bolt} = 10.926 \cdot kip$

$$Check_{17} := \begin{cases} \text{"OK"} & \text{if } T_u < T_n \\ \text{"FAILS COMB. TENS. \& SHEAR"} & \text{otherwise} \end{cases}$$

$Check_{17} = \text{"OK"}$

transverse wind

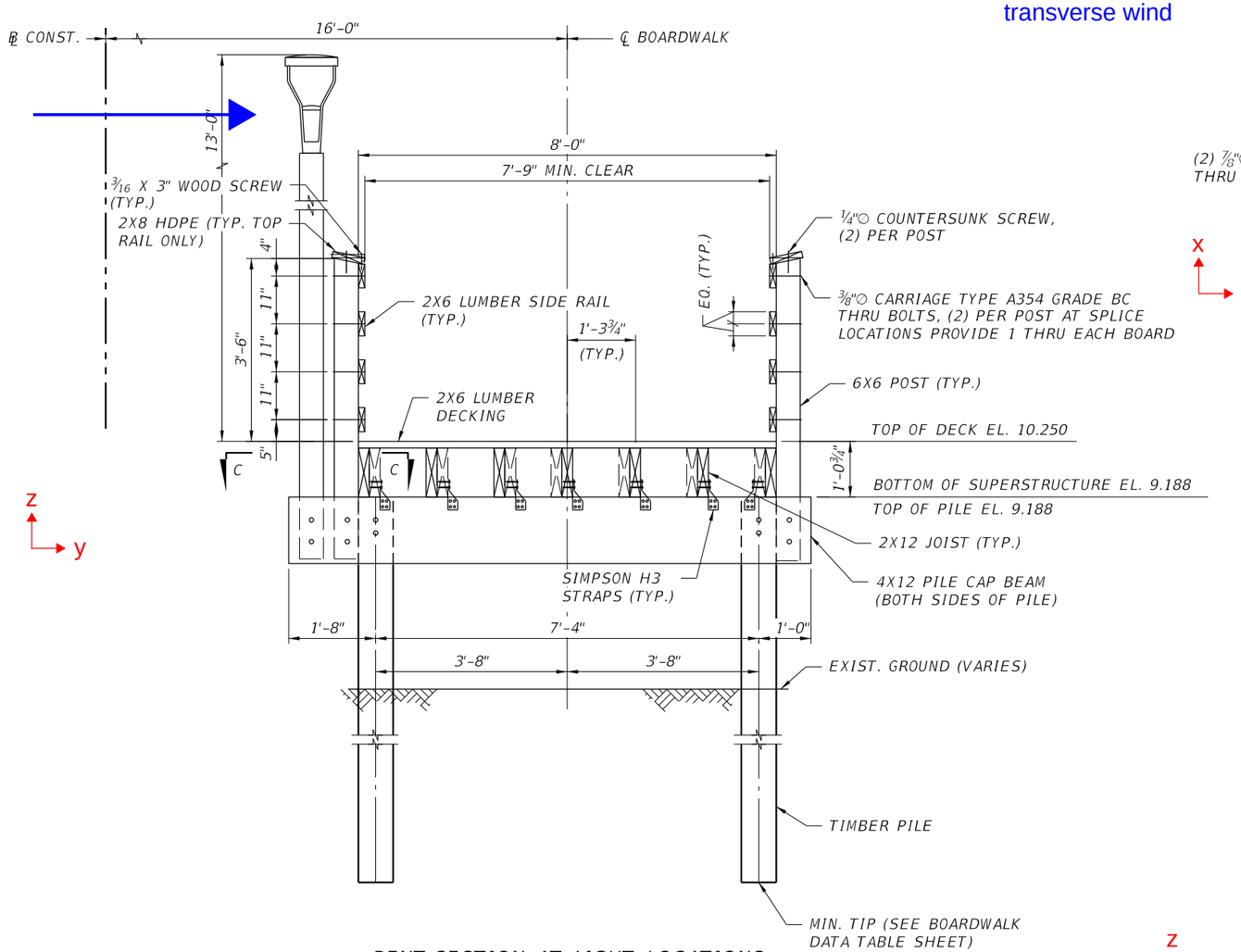

BENT-SECTION AT LIGHT LOCATIONS

(BENT NO. 4, 13, 21, 29, 37, 45, 52, 60 AND 68)

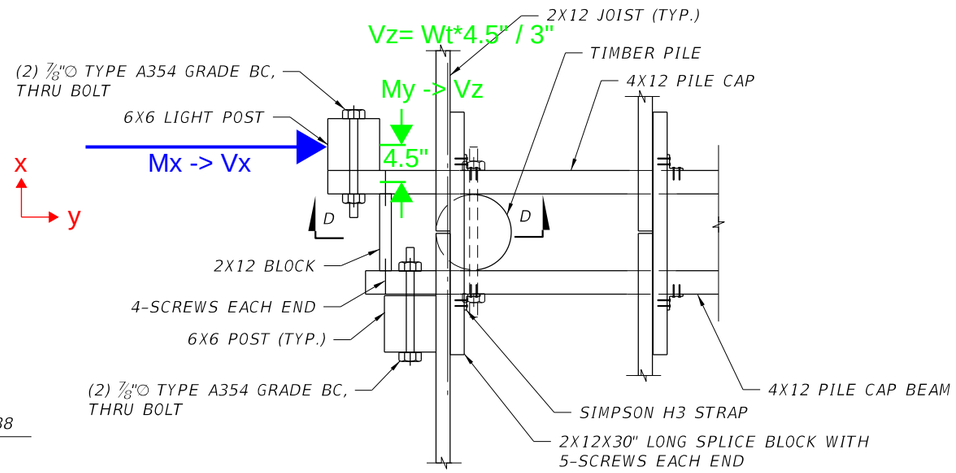

SECTION C-C

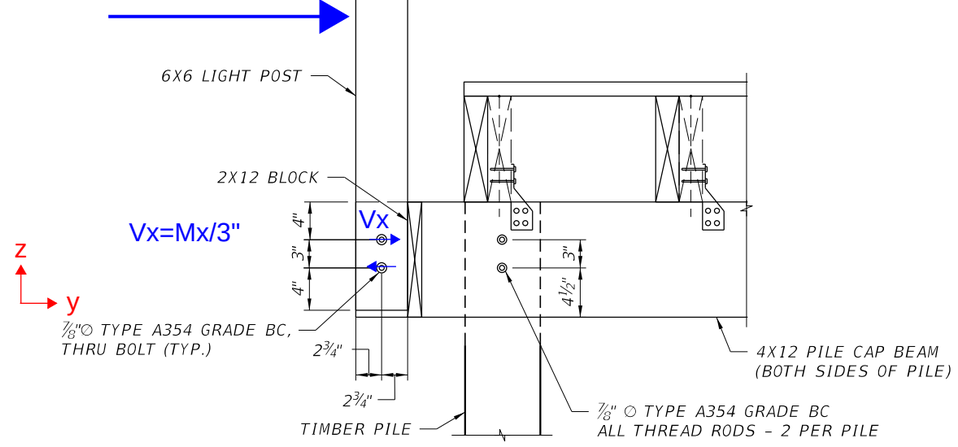

SECTION D-D

NOTES:

1. ALL HARDWARE SHOWN SHALL BE HOT-DIP GALVANIZED (HDG). SIMPSON CONNECTORS SHALL BE GALVANIZED OR ZMAX COATED.
2. SUBMIT DOCUMENTATION FOR ALTERNATIVE CONNECTORS FOR APPROVAL IF IT DIFFERS FROM THE CONNECTORS SHOWN IN THE PLANS.

Mx = My = Mu

THE OFFICIAL RECORD OF THIS SHEET IS THE ELECTRONIC FILE DIGITALLY SIGNED AND SEALED UNDER RULE 61G15-23.004, F.A.C.

Designed By : JAH 05-22
Drawn By : BSW 11-21
Checked By : DAB 05-22
Checked By : DAB 05-22

REVISIONS		
DATE	DESCRIPTION	DATE
	STRUCTURAL CALCULATIONS	

CITY OF PORT ORANGE
1000 CITY CENTER CIRCLE
PORT ORANGE, FL. 32129

MARK NIEDERMANN, P.E.
P.E. LICENSE NUMBER 45957

FLORIDA BRIDGE & TRANSPORTATION, INC.
633 DARTMOUTH STREET
ORLANDO, FL 32804
FBT 21-31.01

SJR2C LOOP TRAIL
FROM SOUTH OF SELIN CIR TO HERBERT ST

ROAD	COUNTY	FINANCIAL PROJECT ID
SPRUCE CREEK RD	VOLUSIA	439865-3-54-01

BOARDWALK DETAILS (2 OF 3)

SHEET NO. B1-04

BWilliams 3/8/2024 1:03:18 PM P:\FDOTWorksets\2021\21-31 SuTrail-Port Orange-TEDS\43986535201\Structures\B1SuperstDet

longitudinal wind

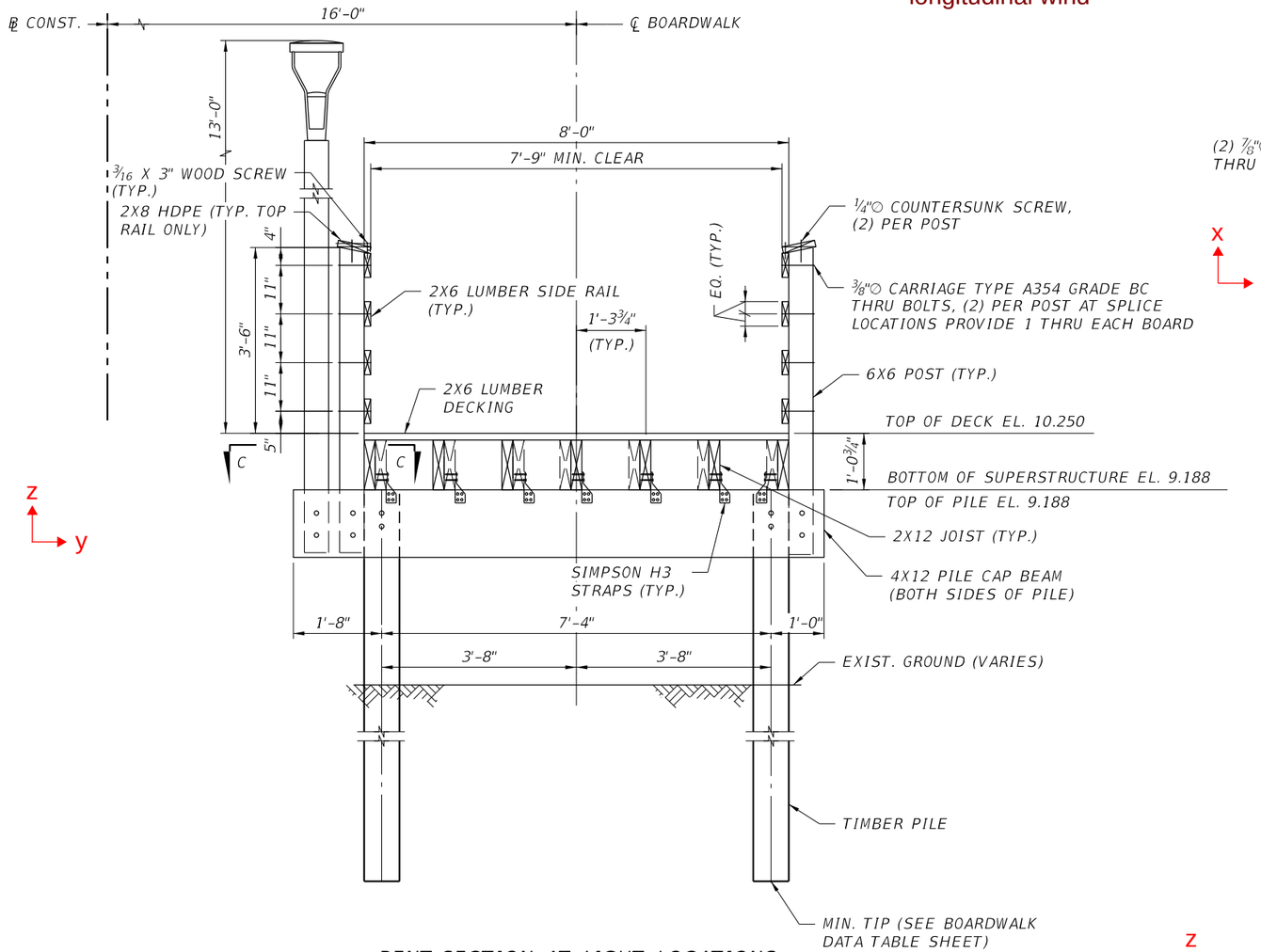

BENT-SECTION AT LIGHT LOCATIONS

(BENT NO. 4, 13, 21, 29, 37, 45, 52, 60 AND 68)

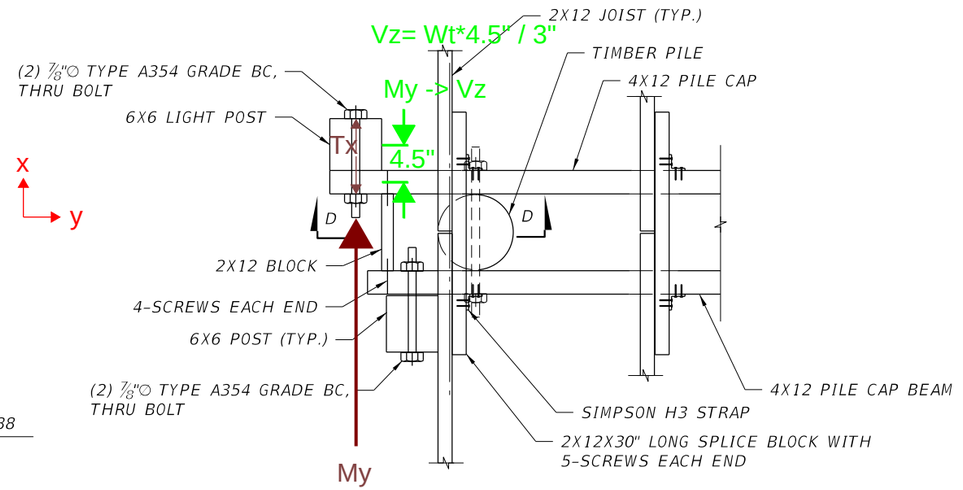

SECTION C-C

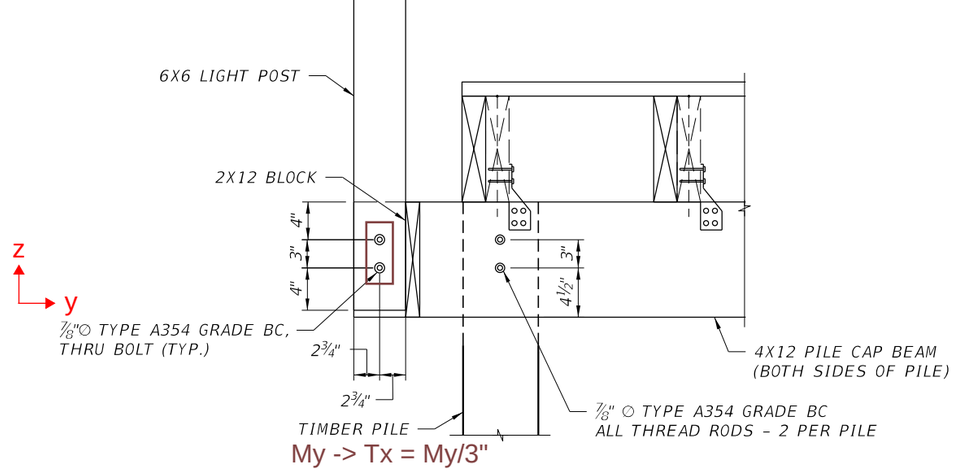

SECTION D-D

Mx = My = Mu

NOTES:

1. ALL HARDWARE SHOWN SHALL BE HOT-DIP GALVANIZED (HDG). SIMPSON CONNECTORS SHALL BE GALVANIZED OR ZMAX COATED.
2. SUBMIT DOCUMENTATION FOR ALTERNATIVE CONNECTORS FOR APPROVAL IF IT DIFFERS FROM THE CONNECTORS SHOWN IN THE PLANS.

REVISIONS		
DATE	DESCRIPTION	DATE

STRUCTURAL CALCULATIONS

CITY OF PORT ORANGE
1000 CITY CENTER CIRCLE
PORT ORANGE, FL. 32129

MARK NIEDERMANN, P.E.
P.E. LICENSE NUMBER 45957

FLORIDA BRIDGE & TRANSPORTATION, INC.
633 DARTMOUTH STREET
ORLANDO, FL 32804

FBT 21-31.01

SJR2C LOOP TRAIL
FROM SOUTH OF SELIN CIR TO HERBERT ST

ROAD	COUNTY	FINANCIAL PROJECT ID
SPRUCE CREEK RD	VOLUSIA	439865-3-54-01

BOARDWALK DETAILS (2 OF 3)

SHEET NO. B1-04

BWilliams 3/8/2024 1:03:18 PM P:\FDOTWorksets\2021\21-31 SuTrail-Port Orange-TEDS\43986535201\Structures\B1SuperstDet

THE OFFICIAL RECORD OF THIS SHEET IS THE ELECTRONIC FILE DIGITALLY SIGNED AND SEALED UNDER RULE 61G15-23.004, F.A.C.

Designed By : JAH 05-22
Drawn By : BSW 11-21
Checked By : DAB 05-22
Checked By : DAB 05-22

FLORIDA BRIDGE AND TRANSPORTATION INC.

JOB# 21-31 SHEET# 1
PROJECT NAME: Sun Trail
SUBJECT: Square Wood Post
POLE ID/STATION: 13' Mounting Height
CALCULATED BY: ADB DATE: Mar-24
CHECKED BY: DAB DATE: Mar-24

SQUARE WOOD POST LUMINAIRE DESIGN

WIND SPEED: (SDG Table 2.4.1-1 Basic Wind Speed)

Wind Pressure Design Criteria as per AASHTO LRFD Specifications for Structural Supports for Highway Signs, Luminaires, and Traffic Signals, First Edition 2015 (LRFDLTS-1):

(LRFDLTS-1 3.8.1) Wind Pressure = $0.00256*K_z*K_d*G*V^2*C_d$

Height & Exposure Factor =	K_z	(LRFDLTS-1, Table C3.8.4-1)
Directionality Factor =	K_d	(LRFDLTS-1, Table 3.8.5-1)
Gust Effect Factor=	G	(LRFDLTS-1, Section 3.8.6)
Drag Coefficient =	C_d	(LRFDLTS-1, Table 3.8.7-1)

County:	Volusia		
Mean Recurrence Interval (MRI):	300	year	(Typically 10, 300, or 700 years for FDOT projects)
Design Wind Speed:	150	mph	
Basic Wind Speed:	140	mph	(FDOT Modifications to LRFDLTS-1, Section 3.8.2)
Pole Exposed Height=	17.00	ft	(18' MH)
Pole Size at Top=	5.50	in	
Taper =	0.0000	in/ft	
Total Pole Length =	17.00	ft	
Average Exposed Pole Width =	5.50	in	
Center of Exposed Height =	8.50	ft	

Wind Load Analysis (Pole)

Segment ID		Z Height above Ground (ft)	K_z Height Coefficient	K_d Directionality Factor	G Gust Factor	V Wind Velocity (mph)	P_z Wind Pressure (without drag coefficient) (psf)	Pole Taper (in/ft)	Pole Size (in)	Avg Dia. (in)	Corner Radius	Cd Drag Coeff.	Exposed Area of Segment (sf)	Pressure on Segment (Includes Drag Coefficient) (psf)	Wind Force on Segment (kip)	Moment Arm to Base (ft)	Wind Moment Acting at Base of Pole (ft*kip)
I	Bottom	0	0.84	0.90	1.14	140	43.24	0.000	5.50	5.50	N/A	2.000	6.88	86.49	0.59	7.50	4.46
	Top	15							5.50								
I	Bottom	15	0.90	0.90	1.14	140	46.33	0.000	5.50	5.50	N/A	2.000	0.92	92.67	0.08	16.00	1.36
	Top	17.0							5.50								
Subtotal (Pole only)															**0.68**	8.56	**5.82**

Wind Load Analysis (Attachments)

Description	Mounting Height (ft)	K_z Height Coefficient	K_d Directionality Factor	G Gust Factor	V Wind Velocity (mph)	Cd Drag Coeff.	Pressure on Segment (Includes Drag Coefficient) (psf)	Member Width (in)	Member Depth (in)	Member Length (in)	Exposed Area (sf)	No. of Equipment	Applied Wind Force (kip)	Moment Arm to Base (ft)	Wind Moment Acting at Base of Pole (ft*kip)
Luminaire	18	0.84	0.95	1.14	140	1.000	45.65	-	-	-	1.00	1	0.05	18.00	0.82
Subtotal (Att. Only)													**0.05**		**0.82**

UNFACTORED FOOTING DESIGN LOADS

Pole Trans. Moment at Base (Wind) =	**6.640**	kip-ft
Pole Trans. Shear at Base (Wind) =	**0.725**	kip
Axial Load (Dead) =	**0.304**	kip
Pole Long. Moment at Base (Dead) =	**0.000**	kip-ft
Torsion (Wind) =	**0.000**	kip-ft

Pole Thickness =	**5.50**	in
Pole Volume =	**3.57**	ft^3
Pole Unit Weight =	**40**	pcf
Pole Weight =	**143**	lbs
Luminaire Weight =	**75**	lbs
Arm Tube Weight =	**25**	lbs
Arm Length =	**0**	ft

75% WL:

Pole Trans. Moment at Base (Wind) =	4.980
Pole Trans. Shear at Base (Wind) =	0.544
Torsion (Wind) =	0.000

STAND-ALONE LIGHT POST ANALYSIS - In accordance with:

1) AASHTO LRFD Guide Specifications for the Design of Pedestrian Bridges - December 2009
2) AASHTO LRFD Bridge Design Specifications - 9th Edition - 2020
3) National Design Specifications for Wood Construction (NDS) - 2018 Edition

DESIGN LOADS (Factored from Wind Load Calculations)

AXIAL LOAD: $P_u := 0.304 \cdot kip$

FLEXURAL LOAD: $M_u := 6.64 \cdot kip \cdot ft$

Southern Pine - Select Structural 6" x 6"

Bending Design Value: $F_{bo} := 2.1 \cdot ksi$

Compression Design Value: $F_{co} := 1.8 \cdot ksi$

Resistance Factor: $\phi := 0.85$

Modulus of Elasticity: $E_o := 1800 \cdot ksi$

MEMBER PROPERTIES EFFECTIVE SIZES

Member (Nom Size)	Horizontal Dimension	Vertical Dimension
LIGHT POST (6 x 6)	$b_{post} := 5.5 \cdot in$	$d_{post} := 5.5 \cdot in$

Gross Section Area: $A_g := b_{post} \cdot d_{post}$

Post Height: $L := 11 \cdot ft$

Effective Length Factor: $K := 2.1$

Effective Length: $L_e := K \cdot L = 277.2 \cdot in$

Section Modulus: $S_p := b_{post} \cdot \frac{d_{post}^2}{6}$

Applicable Adjustment Factors [Ref 2 - LRFD 8.4.4]

Format Conversion Factor [8.4.4.2]

$C_{KF\_b} := \frac{2.5}{\phi}$ $C_{KF\_b} = 2.94$ For Bending

$C_{KF\_v} := C_{KF\_b}$ $C_{KF\_v} = 2.94$ For Shear

$C_M := 1.0$ Wet Service Factor [8.4.4.3]

$C_i := 0.8$ Incising Factor [8.4.4.7] - Conserv.

$C_F := 1.0$ Size Factor [8.4.4.4]

$C_L := 1.0$ Beam Stability Factor [8.6.2]

$C_{fu} := 1.0$ Flat Use Factor [8.4.4.6] - Load applied to narrow face- edgwise - N/A

$C_d := 1.0$ Factor [8.4.4.8] - N/A

$C_\lambda := 0.8$ Time Effect Factor [8.4.4.9] - (Strength 1)

$C_t := 1.0$ Temperature Factor [REF 3-5.3.4]

Adjusted Design Values [Ref 2 - LRFD 8.4.4.1]

$F_b := F_{bo} \cdot C_{KF\_b} \cdot C_M \cdot C_F \cdot C_\lambda \cdot C_{fu} \cdot C_i \cdot C_d$ $F_b = 3.953 \cdot ksi$

$F_c := \left(F_{co} \cdot C_{KF\_v} \cdot C_M \cdot C_i \cdot C_\lambda\right)$ $F_c = 3.388 \cdot ksi$

$E := E_o \cdot C_M \cdot C_i$ $E = 1440 \cdot ksi$

Flexural Capacity [Ref 2 - LRFD 8.6.1]

$M_r := \phi \cdot F_b \cdot S_p \cdot C_L$ $M_r = 7.764 \cdot kip \cdot ft$ $M_u = 6.64 \cdot kip \cdot ft$

$Check_1 := if(M_r > M_u, "OK", "NG")$ $Check_1 = "OK"$

$M_r := S_p \cdot F_b$ $M_r = 9.134 \cdot kip \cdot ft$ $M_u = 6.64 \cdot kip \cdot ft$

$Check_2 := if(M_r > M_u, "OK", "NG")$ $Check_2 = "OK"$

Compressive Capacity [Ref 2 - LRFD 8.8.1]

Column Stability Factor [8.8.2-2]

$K_{cE} := 0.52$ Euler Buckling Coefficient $c_1 := 0.8$ coefficient for sawn lumber

$F_{ce} := \frac{K_{cE} \cdot E \cdot d_{post}^2}{L_e^2}$ Euler Bucking Stress

$B := \frac{F_{ce}}{F_c} = 0.087$ Beam Stability Factor [8.6.2]

$C_p := \frac{1 + B}{2c_1} - \left[\left(\frac{1 + B}{2c_1}\right)^2 - \frac{B}{c_1}\right]^{0.5}$ $C_p = 0.085$

$P_r := \phi \cdot F_c \cdot A_g \cdot C_p$ $M_r = 9.134 \cdot kip \cdot ft$ $M_u = 6.64 \cdot kip \cdot ft$

$Check_1 := if(M_r > M_u, "OK", "NG")$ $Check_1 = "OK"$

$M_r := S_p \cdot F_b$ $M_r = 9.134 \cdot kip \cdot ft$ $M_u = 6.64 \cdot kip \cdot ft$

$Check_2 := if(M_r > M_u, "OK", "NG")$ $Check_2 = "OK"$

Combined Flexure and Compression [Ref 2 - LRFD 8.10.2]

$$Check_3 := if\left[1.0 > \left(\frac{P_u}{P_r}\right)^2 + \frac{M_u}{M_r\left(1 - \frac{P_u}{F_{ce} \cdot A_g}\right)}, "OK", "NG"\right]$$

$Check_3 = "OK"$

$$\left(\frac{P_u}{P_r}\right)^2 + \frac{M_u}{M_r\left(1 - \frac{P_u}{F_{ce} \cdot A_g}\right)} = 0.754$$

Drilled Shaft Foundation for Sign, Signal, and Lighting Support Structures v1.1

State Structures Design Office

SUBJECT SUN TRAIL
FIN # FBT 21-31 LOCATION MULTIPLE

DESIGNED BY ADB DATE 03-18-24
CHECKED BY DAB DATE 03-20-24

© 2018 Florida Department of Transportation

Program Changes

SoilType := Sand / Clay

$\phi_{soil} := 25 \cdot deg$ *soil friction angle (sand)*

$c_{soil} := 2.0 \cdot \frac{kip}{ft^2}$ *soil shear strength (clay)*

$N_{blows} := 5$ *number of blows per foot. If N< 5, contact the district geotech Engineer*

$\gamma_{soil} := 40 \cdot pcf$ *effective soil weight (typical design value = 45 ~ 50 pcf)*

Geometry

$b := 2 \cdot ft$ *shaft diameter*

$Offset := 0.0 \cdot ft$ *groundline to top of foundation*

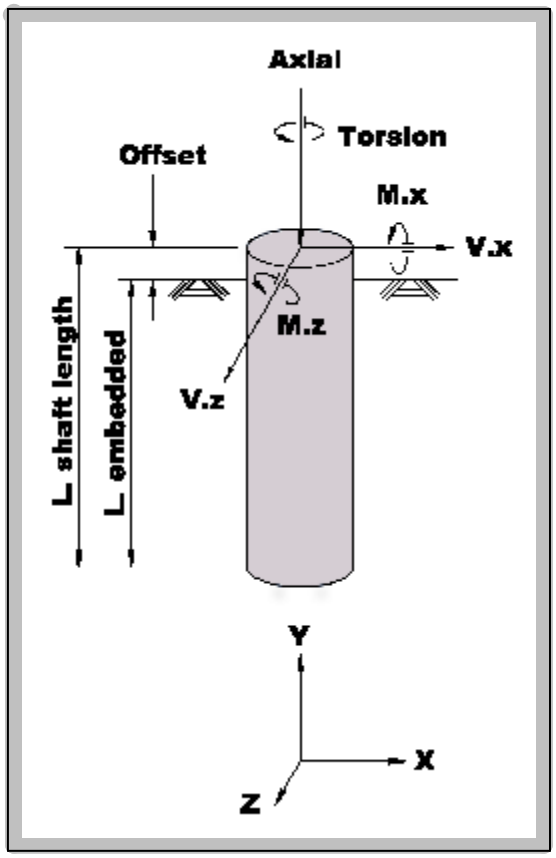

Applied Loads (Extreme I)

$M_x := 6.64 \cdot kip \cdot ft$ $V_x := 0 \cdot kip$ $Torsion := 0 \cdot kip \cdot ft$

$M_z := 0 \cdot kip \cdot ft$ $V_z := 0.725 \cdot kip$ $Axial := .304 \cdot kip$

StructureType := Cantilever Overhead Sign Structure / Mast Arm Signal Structure / Concrete/Steel Strain Poles / Ground Sign

StructureType = **2**

$\phi_{ot} := if(StructureType = 3, 0.8, 0.6)$ $\phi_{ot} = 0.6$ *ϕ factor against overturning [SM Vol-3 13.6.1.1]*

$\phi_{tor} := if(StructureType = 0, 0.9, 1.0)$ $\phi_{tor} = 1$ *ϕ factor against torsion [SM Vol-3 13.6.1.1]*

Shaft Depth Required to Resist Overturning

$M_u := \sqrt{M_x^2 + M_z^2} = 6.6 \cdot kip \cdot ft$

$P_u := \sqrt{V_x^2 + V_z^2} = 0.7 \cdot kip$

$T_u := Torsion = 0 \cdot kip \cdot ft$

*short free-head pile in **cohesionless soil** using Broms method*

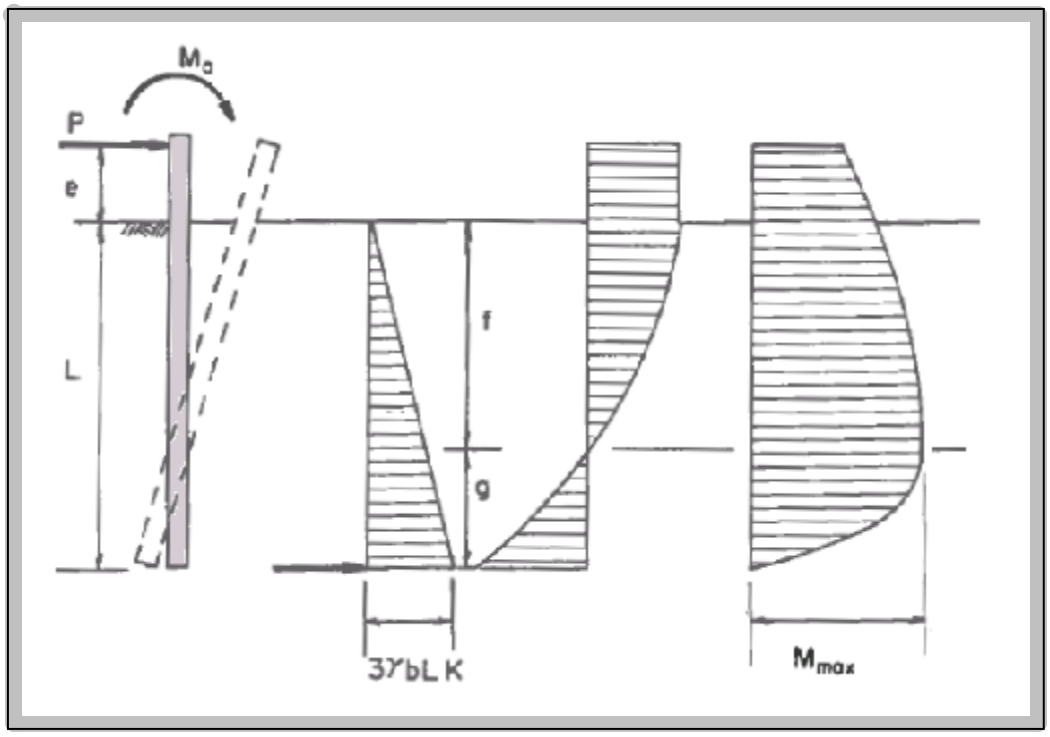

Deflection, load, shear and moment diagram for a short pile in cohesionless soil that is unrestrained against rotation.

$K_p := \tan\left(45 \cdot deg + \frac{\phi_{soil}}{2}\right)^2 = 2.5$ $\quad e_{sand} := Offset = 0$

Guess value $\quad L_{otSand} := 8 \cdot ft$

Given $\quad P_u \cdot (e_{sand} + L_{otSand}) + M_u = \phi_{ot} \cdot \left[(3 \cdot \gamma_{soil} \cdot b \cdot L_{otSand} \cdot K_p) \cdot \left(\frac{1}{2} \cdot L_{otSand}\right) \cdot \left(\frac{1}{3} \cdot L_{otSand}\right) \right]$

$L_{otSand} := Find(L_{otSand}) = 5.7\,ft$

$L_{otSand} := ceil\left(\frac{L_{otSand}}{ft}\right) \cdot ft = 6\,ft$ $\quad$ *(round up to next foot)*

*short free-head pile in **cohesive soil** using Modified Broms method for L < 3b (see reference file for derivation)*

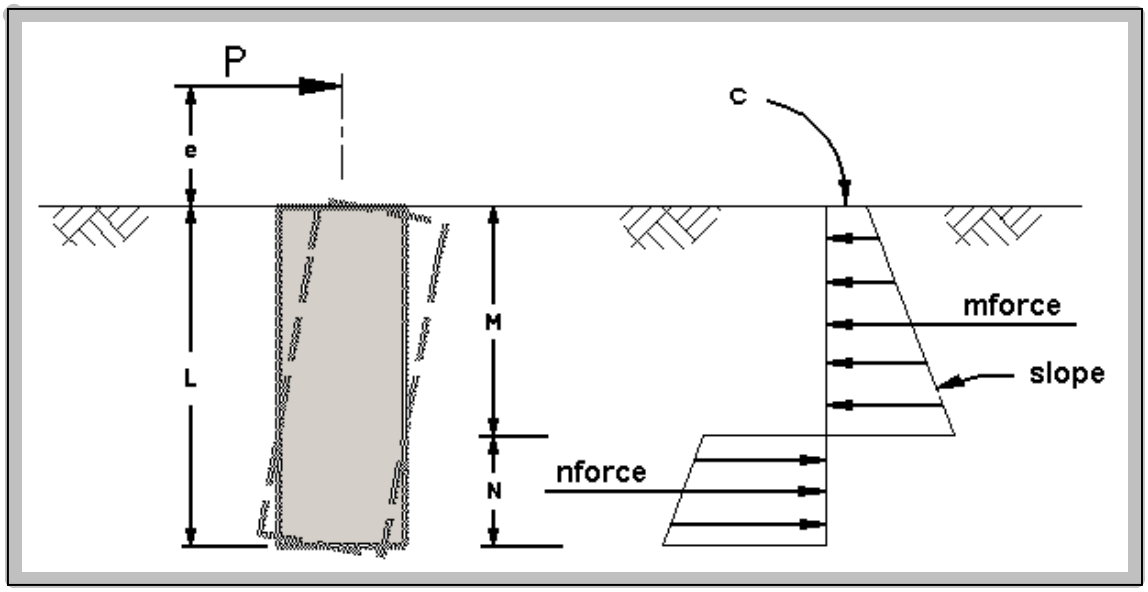

Deflection, load, shear and moment diagram for a short pile in cohesive soil that is unrestrained against rotation.

$c_{soil} := if\left(c_{soil} = 0 \cdot ksf, 0.1 \cdot ksf, c_{soil}\right) = 2 \cdot ksf$

$Slope := 8 \cdot \frac{c_{soil}}{3 \cdot b} = 2.7 \cdot \frac{kip}{ft^3}$

$e_{clay} := \frac{M_u}{P_u} + Offset = 9.2\,ft$

$nforce(M, N) := \left[Slope \cdot (2 \cdot M + N) + 2 \cdot c_{soil}\right] \cdot N \cdot \frac{b}{2}$

$mforce(M) := \left(2 \cdot c_{soil} + M \cdot Slope\right) \cdot M \cdot \frac{b}{2}$

$m\_arm(M) := e_{clay} + \frac{M}{3} \cdot \frac{2 \cdot \left(M \cdot Slope + c_{soil}\right) + c_{soil}}{M \cdot Slope + 2 \cdot c_{soil}}$

$n\_arm(M, N) := e_{clay} + M + \frac{N}{3} \cdot \frac{2 \cdot \left(N \cdot Slope + M \cdot Slope + c_{soil}\right) + \left(M \cdot Slope + c_{soil}\right)}{Slope \cdot (2 \cdot M + N) + 2 \cdot c_{soil}}$

Guess value $M := 4.0 \cdot ft$ $N := 4.0 \cdot ft$

Given $P_u + \phi_{ot} \cdot nforce(M, N) = \phi_{ot} \cdot mforce(M)$ $mforce(M) \cdot m\_arm(M) = nforce(M, N) \cdot n\_arm(M, N)$

$\begin{pmatrix} M \\ N \end{pmatrix} := Find(M, N)$ $L_{ot1Clay} := M + N = 2.3\,ft$

$L_{ot1Clay} := ceil\left(\frac{L_{ot1Clay}}{ft}\right) \cdot ft = 3\,ft$ *(round up to next foot)*

*short free-head pile in **cohesive soil** using Regular Broms method for L > 3b*

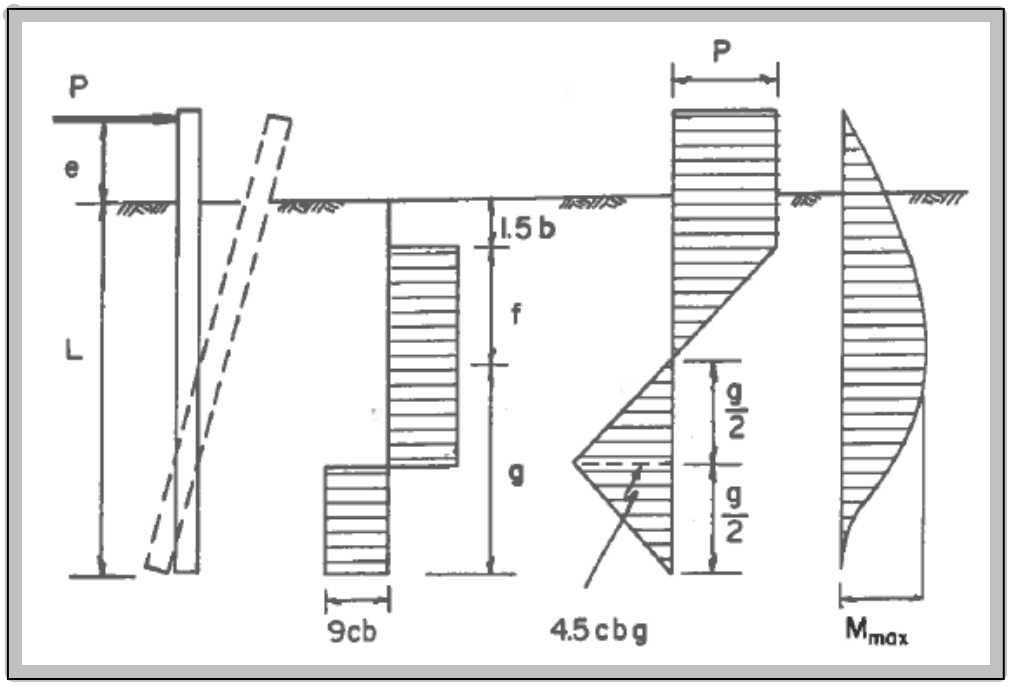

Deflection, load, shear and moment diagram for a short pile in cohesive soil that is unrestrained against rotation.

$M_{max.clay}$ *equation is derived from the integration of the upper part of the shear diagram to the point of zero shear.*

$$f := \frac{P_u}{\phi_{ot} \cdot 9 \cdot c_{soil} \cdot b} = 0 \text{ ft}$$

$$M_{max.clay} := P_u \cdot \left(e_{clay} + 1.5 \cdot b + 0.5 \cdot f\right) = 8.8 \cdot \text{kip} \cdot \text{ft}$$

$$g := \sqrt{\frac{M_{max.clay}}{2.25 \cdot \phi_{ot} \cdot c_{soil} \cdot b}} = 1.3 \text{ ft}$$

$$L_{ot2Clay} := (1.5 \cdot b + f + g) = 4.3 \text{ ft}$$

$$L_{ot2Clay} := \text{ceil}\left(\frac{L_{ot2Clay}}{\text{ft}}\right) \cdot \text{ft} = 5 \text{ ft}$$ *(round up to next foot)*

$$L_{otClay} := \text{if}\left(L_{ot1Clay} < 3 \cdot b, L_{ot1Clay}, L_{ot2Clay}\right) = 0.9$$ *(If L_{ot} < 3b, use Modified Broms method)*

$$L_{reqdOT} := \text{if}\left(\text{SoilType} = \text{"Sand"}, L_{otSand}, L_{otClay}\right)$$

$L_{reqdOT} = 6$ ft *required shaft embedment depth to resist overturning*

Shaft Depth Required to Resist Torsion

*short free-head pile in **cohesionless soil***

NOTE: ω_{fdot} is based upon concrete soil interaction. This torsion methodology is not to be used with permanent casing.

$N_{blows} = 5$

$\omega_{fdot} := 1.5 \cdot \frac{N_{blows}}{15} = 0.5$

load transfer ratio, If 5<N<15, ω_{fdot} is reduced by a factor of $\frac{N_{blows}}{15}$ *SM Vol-3 13.6*

Guess value $L_{torSand} := L_{reqdOT} = 6\ ft$

Given $T_u = \phi_{tor} \cdot \left[\pi \cdot b \cdot \left(L_{torSand} \right) \cdot \gamma_{soil} \cdot \left(\frac{L_{torSand}}{2} \right) \cdot \left(\omega_{fdot} \right) \cdot \frac{b}{2} \right]$

$L_{torSand} := \text{Find}\left(L_{torSand} \right) = 0\ ft$

$L_{torSand} := \text{ceil}\left(\frac{L_{torSand}}{ft} \right) \cdot ft = 1\ ft$ *(round up to next foot)*

*short free-head pile in **cohesive soil***

$\text{CohesionFactor} := 0.55$

$f_{se} := \text{CohesionFactor} \cdot c_{soil} = 1.1 \cdot ksf$

Guess value $L_{torClay} := L_{reqdOT}$

Given $T_u = \phi_{tor} \cdot \left[f_{se} \cdot (\pi \cdot b) \cdot \left(L_{torClay} - 1.5 \cdot ft \right) \cdot \frac{b}{2} \right]$

$L_{torClay} := \text{Find}\left(L_{torClay} \right) = 1.5\ ft$

$L_{torClay} := \text{ceil}\left(\frac{L_{torClay}}{ft} \right) \cdot ft = 2\ ft$ *(round up to next foot)*

$L_{reqdTor} := \text{if}\left(\text{SoilType} = \text{"Sand"}, L_{torSand}, L_{torClay} \right)$

$L_{reqdTor} = 1\ ft$ *required shaft embedment depth to resist torsion*

$L_{embedded} := \text{if}\left(L_{reqdTor} > L_{reqdOT}, L_{reqdTor}, L_{reqdOT} \right) = 1.8$

$L_{shaft.length} := L_{embedded} + \text{Offset}$

$L_{shaft.length} = 6\ ft$ *shaft length*

HDPE TECHNICAL DATA & AVAILABLE SIZES

American Plastic Lumber, Inc

Largest selection of colors, sizes, and grades available
Premium, structural, utility and sheet goods
50 year limited warranty

About Us | Furniture Order Form | ContactUs

HDPE Decking

Technical Data

DESCRIPTION

APL's HDPE products are made of high-density polyethylene (HDPE), UV-inhibited pigment systems, foaming compounds and selected process additives.

The HDPE raw material is derived from post-consumer bottle waste, such as milk and detergent bottles. This material is cleaned in APL Building Product's decontamination process to a high purity level, which removes contaminants such as food residue, paper, and adhesives. It is then compounded into a rigid board stock material, with the resulting finished product containing over 90% recycled plastic by weight.

Because HDPE products are made with a single, purified polymer, they are manufactured to exacting, reproducible specifications. They have exceptional resistance to corrosive substances, oils and fuels, insects, fungi, salt spray, and other environmental stresses. They do not absorb moisture; therefore, they will not rot, splinter, or crack.

HDPE products are manufactured in many dimensional lumber sizes, shapes, and colors. Planks, posts, rails, balusters, tongue and groove, groove and groove, and many specialty profiles are available. The products come in many wood tones and popular colors, including Sand, Weathered Wood, Light Gray, Cedar, Redwood, and White.

HDPE products have excellent weathering resistance; however, as with other polyolefins, it is possible that the material will fade slightly over the service life of the product. These products require no waterproofing, painting, staining, or similar maintenance when used in many exterior applications.

BASIC USES

HDPE products are used in many conventional wood lumber applications and are often the products of choice for exterior applications where weathering resistance and low maintenance are required.

Used in both residential and municipal applications, HDPE products are well suited for decking, porch flooring, docks, piers, furnishings, fencing, and lawn and garden items. HDPE products are cost-effective alternatives for ground contact and animal contact, wet, and environmentally harsh conditions.

Mechanical Properties @ 70°F	Test Method	Average Value...
Modulus of elasticity (@ 1% strain)	ASTM D6109	114,000 psi
Ultimate flexural stress (@ 3% strain)	ASTM D6109	2300 psi
Allowable flexural stress	ASTM D6109	1200 psi
Endwise compressive stress (@ 3% strain)	ASTM D6108	1740 psi
Screw withdrawal #10, 1 1/2"	ASTM D6117 7	90 lbs
Water absorption, 11 weeks	ASTM D570	Less than 0.1%
Coefficient of thermal expansion	ASTM D6341	.000055 in/in/°F
Density	ASTM D6111	.024 - .027lbs/ cu in*

LIMITATIONS

This type of product has less rigidity (modulus of elasticity) and greater elongation than wood lumber. Therefore, it is not recommended for use as a true structural member. Examples of applications that are inappropriate would be load-bearing walls, deck framing, and floor joists. It is recommended that an engineering study be performed prior to use of HDPE products if the application involves structural requirements. For commercial applications where the system design calls for concentrated loads, APL's Structural Lumber should be considered.

When utilizing HDPE products for decking or flooring, careful attention must be paid to joist spacing; joist spans will depend upon which HDPE deck board is installed. Multiple-span data at 120°F or less are presented here:

Allowable Live Load (psf), Multiple Spans, at 120°F or less

Deflection Limit	12" Span	16" Span	19.2" Span	24" Span
1 X Decking Board (*t* = 0.75)				
1/360	85	-	-	-
1/240	128	54	-	-
1/180	171	72	-	-
5/4 G & G/C Deck Board (*t* = 1.25)				
1/360	235	99	57	-
1/240	353	149	86	-
1/180	470	198	115	-
2 X Decking Board (*t* = 1.50)				
1/360	749	316	183	94
1/240	1124	474	274	140
1/180	1498	632	366	187

Note: Table provides limiting uniform load in pounds per square foot (psf) based on noted deflection criteria. Recommended standard is to limit live load deflection for floors to 1/360 and to limit total deflection (dead + live load) to 1/240. Designers may choose less restrictive or more restrictive criteria for a given application. Except for very unusual and heavy loading, deflection criteria will control allowable plank span. Deflection determination is based on the secant modulus of elasticity measured at 1% strain at 70°F in accordance with published data. Multiple span data assume uniform load is present on three spans (deflection = .0069wL4/EI). This formulation is consistent with and slightly more conservative than the plank span data promulgated by the Western Woods Product Association and others. Multiple span values are applicable to plank continuous over at least two spans.

INSTALLATION

HDPE products can be fabricated and installed with the same tools used to work wood lumber. The product will cut and drill very cleanly, as there is no grain to split or chip. It is not necessary to pre-drill the plastic lumber when fastening. Stainless steel or coated decking nails and screws are recommended for use with HDPE products. Screws are recommended for use with HDPE products. Screws offer the best form of attachment; however, nails and staples may also be utilized in some applications. See recommended fastener configurations and minimum screw sizes per the following table:

Deck Board Member	Recommended Fastening System
2 x 6 5/4, G&G/C-deck	Direct Screw Direct Screw G & G

Fastening System	Screw Type (All Stainless Steel or Coated Recommended
Direct Screw Down	2 x 6: #10, 2 3/4" flat head, min.; G&G/C-deck, 5/4 x 6: #8, 2 1/2" flat head, min.
G&G or T&G	G&G: #7, 1 7/8 trim head into joist; T&G: #6 or #8, 2" deck screw , min.
EC-Clip for Stair Tread	Two 1 7/8 bugle head screws into joist and one 1" wood screw into bottom of overhang board
1 x 6	Direct Screw

The use of full length boards is suggested to avoid unattractive butt-to-butt joints. If the deck is longer than the boards, feature strips or T-molding may be used. Because of its recycled nature and the mechanical properties of plastic, both color variation and contraction are inherent in the product. For complete installation instructions, including HDPE railing, consult the full APL Decking System Installation Guide on www.american-plasticlumber.com.

Note: In direct sunlight, darker colors absorb more heat and may exaggerate expansion and contraction. It is recommended that lighter colors be used in these applications.

WARRANTY

HDPE products come with a transferable 50-year limited warranty. The product is warranted against termites and fungal decay for a period of 50 years. The product is also warranted not to rot, split, splinter or check for a period of 10 years. The material will be replaced if the product does not perform as stated. Contact American Plastic Lumber for specific limited warranty coverage.

MAINTENANCE

HDPE products are unaffected by most corrosive substances and will not absorb moisture. To maintain its beauty, clean the lumber with soap and water. No water sealing or painting is required; as a general rule, paint will not adhere to HDPE products.

Graffiti can be cleaned from the plastic lumber with the use of a conventional all-purpose cleaner or petroleum-based cleaner.

If the skin or surface layer of an HDPE product becomes marred or blemished, it is possible to sand off the top skin. The surface can also be buffed to eliminate abrasions.

ADDITIONAL INFORMATION

HDPE products are impervious to paint and most adhesives; therefore, these materials are not recommended for use.

HDPE products have been tested by Underwriters Laboratories for use in outdoor applications. The product has a melt temperature of Approximately 270°F and a flash point of approximately 620°F. It has a higher flashpoint than wood, and it must be exposed to a severe Combustion source for a longer period than wood to ignite the product. But like wood, when exposed to a combustion source for a long enough period, it will burn. Should a flame occur, extinguishing media should be dry chemical, foam, carbon dioxide, or water spray; water should be applied from a fogging nozzle.

HDPE products have been tested under repeated hygrothermal conditions (freezing, thawing and wet conditions) as established by the ASTM and are proven to maintain their mechanical properties. HDPE products comply with the code requirements as outlined in ICC Legacy Evaluation Report 97-63.1. HDPE has also completed evaluation by HUD for decking and railing applications (see HUD MR #1306).

TECHNICAL SERVICES

Technical service is available from American Plastic Lumber at 877.677-7701 by fax at 530.677-6718, or visit our website at www.american-plasticlumber.com.

HDPE products offer multiple deck board attachment options to accommodate expansion and contraction concerns in different climatic conditions and to address specific installation parameters.

These options include:

- Tongue & groove deck board attachment with toe screwing options.
- Direct screw attachment with feature strip or T-mold options.
- Floating attachment with EC Clip options.
- Floating attachment with groove & groove options.

For comprehensive and up-to-date deck installation details, please visit www.american-plasticlumber.com.

SIZES

HDPE products are manufactured in continuous extrusions and can be made to virtually any length. Popular dimensional lumber profiles are stocked in 8', 12', 16' and 20' lengths.

Cross sections include:

- 1/2 x 1 1/2
- 1/2 x 2 1/2
- 1 1/2 x 1 1/2
- 4 x 4
- 1 x 6
- T & G
- L Molding
- T Molding
- Handrail
- Spindles

Other profiles are available by contacting American Plastic Lumber customer service

TX TURF GATOR UTILITY VEHICLE SPECS

Enns Brothers

McGillivray @ the Perimeter
, MB (Manitoba) R2J0V1
Call Us: (204) 895-0212
http://www.ennsbrothers.com/

2022 JOHN DEERE 4-PASSENGER GATOR™ XUV590E S4

SELLING PRICE - CLICK FOR A QUOTE



INFORMATION

2022 JOHN DEERE 4-PASSENGER GATOR™ XUV590E S4

- Multi-passenger capability for four people
- Easier shifting, with integrated park position
- New electronic switch for instant 4WD engagement
- Convertible rear seat for extra storage

Features may include:

Precision-engineered drive system optimizes acceleration, hauling, towing, and hill-climbing capabilities

- The Gator™ XUV Mid-Size Crossover Series Utility Vehicles have a precision-engineered drivetrain system that fully utilizes engine power, optimizing acceleration, hauling, towing, and hill-climbing capabilities. Power is transmitted from the engine through a continuously variable clutch system to the transaxle.
- Key elements of the drive system include:
- VARIABLE-SPEED DRIVE

- The variable-speed drive consists of two clutches and a drive belt:
- Drive clutch is attached to the engine.
- Driven clutch is attached to the transaxle.
- Ability to creep along slowly to maneuver in tight spaces
- Standard full-clutch enclosure with a high intake and exhaust ensures a dry belt when crossing water
- High-speed fan on drive clutch provides longer belt and clutch life by keeping components cool
- TEAM® industry clutches provide high performance and longevity
- How the variable-speed drive works:
- As engine speed increases, the spring-loaded drive clutch is closed by weights being forced out by centrifugal force.
- As the drive clutch closes, the belt rides up to the largest diameter of the drive clutch and forces open the driven clutch.
- With the belt running in the smallest diameter of the driven clutch, the speed being transferred to the transaxle is increased.
- The driven clutch is designed to sense varying loads (inclines, mud, etc.) and constantly adjusts drive speed upward or downward so that engine rpm remains optimal.
- 4WD
- Selectable 4WD system with a limited slip front differential and dash-mounted electronic rocker switch
- Provides exceptional traction in challenging conditions
- Maintains turf-friendly operation in two-wheel drive (2WD) mode
- Combined with rear traction assist (differential lock), provides excellent traction in challenging conditions
- More control descending hills with 4WD engaged, as all four wheels help slow the vehicle down
- Clutch engagement still necessary to prevent free coasting
- Transaxle
- Low, high, neutral, reverse, and park transaxle
- Automotive-style, integrated park position in transmission
- To shift out of park, service brake must be pressed to release the parking solenoid. An audible click will be heard and allows the vehicle to shift out of park into the desired gear.
- Low range for maximum torque delivered to the wheels for hauling, pushing, and pulling
- High range for maximum vehicle speed
- Cast-aluminum design for lower weight
- Helical forward and reverse gears are used for quiet operation
- Rear traction assist (differential lock) is controlled with an electronic rocker switch
- NOTE: Locked differential design may increase scuffing of the turf during turns because the rear wheels are turning at the same speed through a turn.
- Contains gear-case for transferring power to the MFWD
- Splined shaft interfaces for maximum torque transfer and durability
- All drive gears machined from highest grade gear steel

PHOTOS

HIGHLIGHTS

- **Location** Call for Availability
- **Condition** New
- **Year** 2022
- **Make** John Deere
- **Model** 4-Passenger Gator™ XUV590E S4
- **Color** Green & Yellow
- **Engine** 4 Cycle Liquid Cooled
- **Horsepower** 32HP
- **Transmission** CVT
- **Fuel Type** Gas
- **Status** Available
- **Width** 56.5 in. (1435 mm)
- **Height** 74 in. (1880 mm)
- **Drive** 4WD
- **Payload Capacity** 500 lbs
- **Towing Capacity** 1500 lbs

SPECIFICATIONS

2022 John Deere 4-Passenger Gator™ XUV590E S4	
Year	**2022**
Manufacturer	**John Deere**
Model Name	**4-Passenger Gator™**
Trim Name	**XUV590E S4**
Generic Type (Primary)	**Utility**
Engine	
Engine Type	**V-twin**
Displacement	**586 cc**
Engine Power	**32 hp (23.8 kW)**
Cooling System	**Liquid cooled**
Fuel System	
Fuel Injection	**Electronic**
Drivetrain	
Transmission	**Continuously Variable Transmission (CVT) with clutch enclosure**
Final Drive	**Park, high, low, neutral, reverse transaxle**
Drive System	**Four wheel drive: Dash switch actuated four-wheel drive system with limited slip front differential, plus locking rear differential**
Differential Lock	**Traction assist: Positive locking, switch actuated rear differential lock**
Suspension	**Front: Fully independent dual A-arm with adjustable coil over shocks, 203 mm (8 in.) travel, anti-roll bar | Rear: Fully independent with lower A-arm and upper camber link with adjustable coil over shocks, 203 mm (8 in.) travel**
Brakes	
Brake System Type	**196 mm (7.7 in.) ventilated four-wheel stainless steel disc brakes with hydraulic 34.93 mm (1.375 in.) diameter twin-piston calipers**
Parking Brake	**Park in-transmission**
Wheels & Tires	
Tires, Rear Specification	**25x8-12 Terrahawk AT (All Terrain) 4-ply rating steel wheels, various colors or 26x8-14 Maxxis® Bighorn® 2.0 6-ply rating aluminum alloy wheels, various colors or 26x8-14 Maxxis Bighorn 2.0 6-ply rating steel wheels, various colors**

Tires, Front Specification	**25x10-12 Terrahawk AT (All Terrain) 4-ply rating steel wheels, various colors or 26x10-14 Maxxis Bighorn 2.0 6-ply rating aluminum alloy wheels, various colors or 26x10-14 Maxxis Bighorn 2.0 6-ply rating steel wheels, various colors**
Battery	**340 CCA**
Electric	
Alternator	**65 amp @ 3400 rpm regulated**
Electrical	**Power port: 12 VDC standard outlet**
Hitch/Type	**Standard 2 in. (50 mm) rear receiver**
Dimensions	**Tread centers Front: 48 in. (1220 mm) / rear: 46 in. (1168 mm) | Cargo box: 32.3 x 47.6 x 11.7 in. (82 x 120.9 x 29.7 cm)**
Wheelbase	**108 in. (2743 mm)**
Length	**144 in. (3658 mm)**
Width	**56.5 in. (1435 mm)**
Height	**74 in. (1880 mm)**
Ground Clearance	**Minimum: 9.3 in. (236 mm)**
Capacities	
Fuel Capacity	**7.4 U.S. gal. (28 L)**
Cargo Capacity	**Box: 8.9 cu ft (0.25 m3)**
Box Capacity	**Cargo capacity (weight): 500 lb (227 kg)**
Payload Capacity	**1200 lb (544 kg)**
Towing Capacity	**1500 lb (680 kg)**
Weights	
Weight	**Wet weight (includes fuel/fluids): 1646 lb (746 kg)**
Features	**Instrumentation: Digital display (gear position, system diagnostic light, speed, rpm, 4WD indicator, rear differential indicator, fuel level, coolant temperature, hour meter, miles, and service interval warning light) | Storage: Two cupholders, sealed underhood storage, glovebox, center console | Seating: Bench seat front/rear**
drive	**4WD**
payload capacity	**500**
towing capacity	**1500**

Josue Herrera

From: Hale, Mike <HaleMike@stanleygroup.com>
Sent: Monday, December 5, 2022 3:02 PM
To: Bassel Kassem; Josue Herrera
Cc: O'Neill, Karen
Subject: FW: 439865-3-34-01 SJR2C Loop Trail SUN Trail - City of Port Orange - Maintenance Vehicle Access to Boardwalk
Attachments: RE: RE: [EXT] RE: 439865-3-34-01 SJR2C Loop Trail SUN Trail - City of Port Orange - Maintenance Vehicle Access to Boardwalk

Bassel / Josue,

See attached load confirmation from City Parks & Rec, but then question below regarding other loads that would seem to exceed the 2,000 lbs max (dry weight + payload) you have accounted for previously. Let me know what changes this necessitates, and if we need to drill down into things further with the City.

Thanks,

Mike Hale, P.E., Transportation Department Manager
STANLEYCONSULTANTS,80 Spring Vista Drive, DeBary, FL 32713
T: 386.753.7106 | M: 386.547.4535 | stanleyconsultants.com

From: Epstein, Lisa <lepstein@port-orange.org>
Sent: Monday, December 5, 2022 2:42 PM
To: Hale, Mike <HaleMike@stanleygroup.com>; O'Neill, Karen <O'NeillKaren@stanleygroup.com>
Cc: Tomlinson, Margaret <mtomlinson@port-orange.org>
Subject: 439865-3-34-01 SJR2C Loop Trail SUN Trail - City of Port Orange - Maintenance Vehicle Access to Boardwalk

***** EXTERNAL EMAIL - Use caution and verify authenticity before trusting any contents. *****

Hi Mike & Karen – Thanks again for your time in our TEAMS call last Friday morning and the opportunity to review several aspects of design progress on this project.
We have confirmed the use of a Gator-type vehicle. In our additional research, it appears that the largest Gator weighs 1646 lbs, including fuel and fluids, and has a payload capacity of 1400 lbs.
Just thinking about the weight of the vehicle, 2 adults, ladder, tools, materials.
Perhaps the structural engineers have already built in enough load compensation. Should we ask for confirmation that the design will meet these total live load estimates?

Lisa Epstein
Engineering Project Manager
Community Development
Lepstein@port-orange.org
Phone (386) 506-5667

From: Hale, Mike <HaleMike@stanleygroup.com>
Sent: Friday, December 2, 2022 11:08 AM
To: Epstein, Lisa <lepstein@port-orange.org>; Tomlinson, Margaret <mtomlinson@port-orange.org>
Cc: O'Neill, Karen <O'NeillKaren@stanleygroup.com>; Bassel Kassem (BKassem@flbridge.com)

BRIDGE GEOMETRY

BOARDWALK BENT LOCATIONS		
BENT NUMBER	STATION	TOP OF DECK ELEVATION
BENT NO. 1	29+64.89	10.25
BENT NO. 2	29+74.89	10.25
BENT NO. 3	29+84.89	10.25
BENT NO. 4	29+94.89	10.25
BENT NO. 5	30+04.89	10.25
BENT NO. 6	30+14.89	10.25
BENT NO. 7	30+24.89	10.25
BENT NO. 8	30+34.89	10.25
BENT NO. 9	30+43.11	10.25
BENT NO. 10	30+53.93	10.25
BENT NO. 11	30+64.75	10.25
BENT NO. 12	30+75.57	10.25
BENT NO. 13	30+86.39	10.25
BENT NO. 14	30+96.39	10.25
BENT NO. 15	31+06.39	10.25
BENT NO. 16	31+16.39	10.25
BENT NO. 17	31+26.39	10.25
BENT NO. 18	31+36.39	10.25
BENT NO. 19	31+46.39	10.25
BENT NO. 20	31+56.39	10.25
BENT NO. 21	31+66.39	10.25
BENT NO. 22	31+76.39	10.25
BENT NO. 23	31+86.39	10.25
BENT NO. 24	31+96.21	10.25
BENT NO. 25	32+07.03	10.25
BENT NO. 26	32+17.86	10.25
BENT NO. 27	32+28.68	10.25
BENT NO. 28	32+39.50	10.25
BENT NO. 29	32+48.37	10.25
BENT NO. 30	32+58.37	10.25
BENT NO. 31	32+68.37	10.25
BENT NO. 32	32+78.37	10.25
BENT NO. 33	32+88.37	10.25
BENT NO. 34	32+98.37	10.25
BENT NO. 35	33+08.37	10.25
BENT NO. 36	33+18.37	10.25
BENT NO. 37	33+28.37	10.25
BENT NO. 38	33+38.37	10.25
BENT NO. 39	33+48.37	10.25
BENT NO. 40	33+58.37	10.25
BENT NO. 41	33+68.37	10.25
BENT NO. 42	33+78.37	10.25
BENT NO. 43	33+88.37	10.25
BENT NO. 44	33+98.37	10.25
BENT NO. 45	34+08.37	10.25

BOARDWALK BENT LOCATIONS		
BENT NUMBER	STATION	TOP OF DECK ELEVATION
BENT NO. 46	34+18.37	10.25
BENT NO. 47	34+28.37	10.25
BENT NO. 48	34+38.37	10.25
BENT NO. 49	34+48.37	10.25
BENT NO. 50	34+58.37	10.25
BENT NO. 51	34+68.37	10.25
BENT NO. 52	34+78.37	10.25
BENT NO. 53	34+88.37	10.25
BENT NO. 54	34+98.37	10.25
BENT NO. 55	35+08.37	10.25
BENT NO. 56	35+18.37	10.25
BENT NO. 57	35+28.37	10.25
BENT NO. 58	35+38.37	10.25
BENT NO. 59	35+48.37	10.25
BENT NO. 60	35+58.37	10.25
BENT NO. 61	35+68.37	10.25
BENT NO. 62	35+78.37	10.25
BENT NO. 63	35+88.37	10.25
BENT NO. 64	35+98.37	10.25
BENT NO. 65	36+08.37	10.25
BENT NO. 66	36+18.37	10.25
BENT NO. 67	36+28.37	10.25
BENT NO. 68	36+38.37	10.25
BENT NO. 69	36+48.37	10.25
BENT NO. 70	36+58.37	10.25
BENT NO. 71	36+68.37	10.25
BENT NO. 72	36+78.37	10.25

QUANTITIES

Treated Timber, HDPE and Timber Piling Quantities

FLORIDA BRIDGE AND TRANSPORTATION, INC				
	Project Name:	SJR2C LOOP TRAIL	Made By: ADB	Date: 3/26/2024
	Project Number:	FBT 21-31.01	Checked By: DAB	Date: 3/26/2024

Decking Quantity

Width	5.5	in	
Height	1.5	in	
Number/Span	21.333		(Includes 1/8" gaps)
Each Length	8	ft	
Quantity/span	170.667	ft	70 spans + 20in
	0.117	MB	

Total Deck Quantity	8.23	MB

Bent Caps - Total Bridge Length

			Light Post Cap Beams	
Width	3.5	in	3.5	in
Height	11.25	in	11.25	in
Number	131		9	
Each Length	9.33	ft	10.00	ft
Quantity	1312.667	ft		
	4.307188	MB		

Total Cap Quantity	4.31	MB

Joists per 10-ft span

					Splice Block (7 ea bent)		
Width	1.5	in					
Height	11.25	in			Width	1.5	in
Number	7				Height	11.25	in
Each Length	10.00	ft			Number	483	
					Each Length	2.500	ft
Quantity	70.00	ft	70 spans +20in		Quantity	1207.500	
	0.098438	MB	6.891	MB		1.698	MB

Total Joist Quantity	8.60	MB

Bridge

HDPE Railing cap (2 rails)		Horizontal Railing (4 rails per side)		Vertical Railing Posts		Boards at Railing Posts	
Width	1.5 in	Width	1.5 in	Width	5.5 in	Width	1.5 in
Height	7.25 in	Height	7.25 in	Height	5.5 in	Height	9.25 in
Number	2	Number/side	4	Number	282	Number	140
RT Railing Length	700.000 ft	RT Railing Length	700.000 ft	Each Length	5.500 ft	Each Length	1.500 ft
LT Railing Length	700.000 ft	LT Railing Length	700.000 ft				
Quantity	1400.000 ft	Quantity	5600.000 ft	Quantity	1551 ft	Quantity	210 ft
	1.269 MB		5.075 MB		3.910 MB		0.243 MB

Vertical Light Post	
Width	5.5 in
Height	5.5 in
Number	9
Each Length	13.000 ft
Quantity	117.000 ft
	0.295 MB

Railing Total for Bridge Area	10.8	MB

Piling

Bent	Pile Area (avg dia = 10.72") (min = 9.4")		Cut-Off EL. (Ft)	Estimated Tip EL.	Length	Number of Piles	Quantity (MB)
1 thru 70	90.206	in^2	9.188	-24	33.188	140	34.93
Avg Diameter*	10.717		Average production pile length		35.00		
Avg Diameter test	10.717						

Piling Total	34.9	MB

* Per Spec 953-2, the natural taper of Southern Pine is approximately 0.085 in/ft through up to 50' in length.

GRAND TOTAL FOR ALL TIMBER

66.8	**MB**

COST ESTIMATE

Cost of HDPE			2 x 6 cost per attached from AZTEC Website - supplier of Plastic Lumber			
	1400	LF	Cost per LF	$	5.74	(Assumes Gray or Brown color)
$	8,036.00	material cost		$	12,054.00	Material cost plus installation

INSTALLATION COST ASSUMED 50% OF MATERIAL COST

Timber Cost						
	65.53	MB	Cost Per MB	$	15,027.64	(Statewide 6 mo. Average)
				$	984,780.03	Material cost plus installation

Total Cost =	$	996,834.03
Add 10% Contingency=	$	1,096,517.44

SUMMARY OF STRUCTURE QUANTITIES

SECTION	PAY ITEM NO.	PAY ITEM DESCRIPTION	LOCATION	UNIT	QUANTITY		TOTAL		DESIGN NOTES	CONSTRUCTION REMARKS
					P	F	P	F		
TIMBER PEDESTRIAN BRIDGE	0470 1	TREATED TIMBER, STRUCTURAL	DECKING	MB	8.23		66.9			
			JOISTS		8.60					
			CAP		4.31					
			RAILING		10.80					
			PILING		34.93					

Lighting Plans

on file with Margaret Tomlinson, Construction and Engineering Manager

Consisting of 10 Pages

SJR2C LOOP TRAIL (SPRUCE CREEK RD)

FROM SOUTH OF SELIN CIRCLE TO HERBERT STREET

LIGHTING PLANS

FINANCIAL PROJECT ID: 439865-3-54-01
VOLUSIA COUNTY

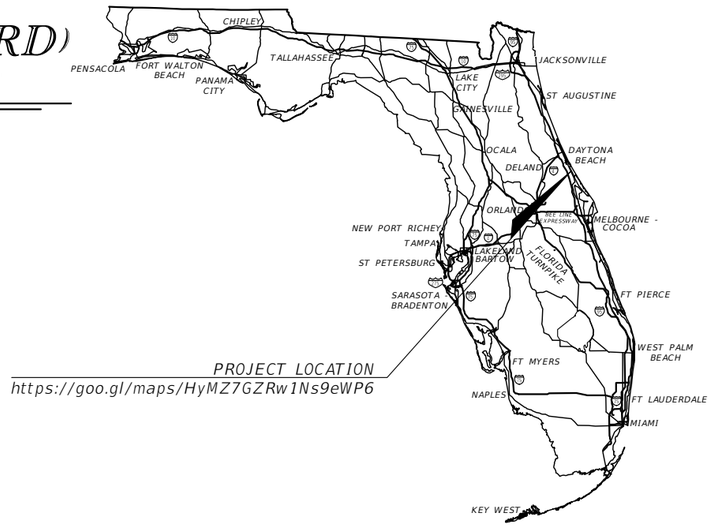

INDEX OF LIGHTING PLANS

SHEET NO.	SHEET DESCRIPTION
L-01	KEY SHEET
L-02	SIGNATURE SHEET
L-03	LIGHTING LEGEND
L-04	LIGHTING DATA TABLE
L-05 - L-09	LIGHTING PLAN SHEET
L-10	LIGHT POST DETAILS

GOVERNING STANDARD PLANS:
Florida Department of Transportation, FY2025-26 Standard plans for Road and Bridge Construction and applicable Interim Revisions (Irs).

Standard Plans for Road Construction and associated Irs are available at the following website:
http://www.fdot.gov/design/Standardplans.shtm

Standard Plans for Bridge Construction are included in the Roadway Plans Component.

GOVERNING STANDARD SPECIFICATIONS:
Florida Department of Transportation, FY2025-26 Standard Specifications for Road and Bridge Construction at the following website:
https://www.fdot.gov/programmanagement/specs.shtm

LIGHTING PLANS ENGINEER OF RECORD:

HANNAH E. NEWHARD, P.E.
P.E. NO.: 99625
STANLEY CONSULTANTS, INC.
80 SPRING VISTA DR
DEBARY FL, 32713

FISCAL YEAR	SHEET NO.
25	L-01

THE OFFICIAL RECORD OF THIS SHEET IS THE ELECTRONIC FILE DIGITALLY SIGNED AND SEALED UNDER RULE 61G15-23.004, F.A.C.

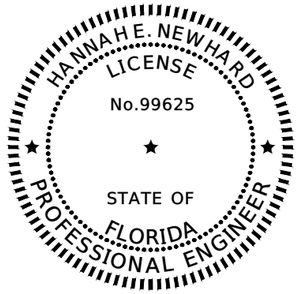

THIS DOCUMENT HAS BEEN DIGITALLY SIGNED AND SEALED BY:

ON THE DATE ADJACENT TO THE SEAL

PRINTED COPIES OF THIS DOCUMENT ARE NOT CONSIDERED SIGNED AND SEALED AND THE SIGNATURE MUST BE VERIFIED ON ANY ELECTRONIC COPIES

STANLEY CONSULTANTS, INC.
80 SPRING VISTA DRIVE
DEBARY, FL 32713
HANNAH E. NEWHARD, P.E. NO. 99625

THE ABOVE NAMED PROFESSIONAL ENGINEER SHALL BE RESPONSIBLE FOR THE FOLLOWING SHEETS IN ACCORDANCE WITH RULE 61G15-23.004, F.A.C.

SHEET NO.	SHEET DESCRIPTION
L-01	KEY SHEET
L-02	SIGNATURE SHEET
L-03	LIGHTING LEGEND
L-04	LIGHTING DATA TABLE
L-05 - L-09	LIGHTING PLAN SHEET

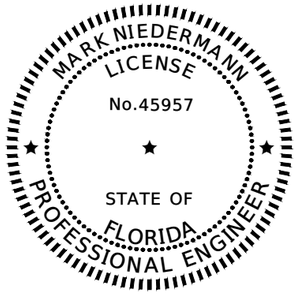

THIS DOCUMENT HAS BEEN DIGITALLY SIGNED AND SEALED BY:

ON THE DATE ADJACENT TO THE SEAL

PRINTED COPIES OF THIS DOCUMENT ARE NOT CONSIDERED SIGNED AND SEALED AND THE SIGNATURE MUST BE VERIFIED ON ANY ELECTRONIC COPIES

FLORIDA BRIDGE & TRANSPORTATION, INC.
633 DARTMOUTH STREET
ORLANDO, FL 32804
MARK NIEDERMANN, P.E. NO. 45957

THE ABOVE NAMED PROFESSIONAL ENGINEER SHALL BE RESPONSIBLE FOR THE FOLLOWING SHEETS IN ACCORDANCE WITH RULE 61G15-23.004, F.A.C.

SHEET NO.	SHEET DESCRIPTION
L-10	LIGHT POST DETAILS

THE OFFICIAL RECORD OF THIS SHEET IS THE ELECTRONIC FILE DIGITALLY SIGNED AND SEALED UNDER RULE 61G15-23.004, F.A.C.

REVISIONS		
DATE	DESCRIPTION	

CITY OF PORT ORANGE
1000 CITY CENTER CIRCLE
PORT ORANGE, FL 32129

HANNAH E. NEWHARD, P.E.
P.E. LICENSE NUMBER 99625
STANLEY CONSULTANTS, INC.
80 SPRING VISTA DRIVE
DEBARY, FL 32713

SJR2C LOOP TRAIL
FROM SOUTH OF SELIN CIR TO HERBERT ST

ROAD	COUNTY	FINANCIAL PROJECT ID
SPRUCE CREEK RD	VOLUSIA	439865-3-54-01

SIGNATURE SHEET

SHEET NO.
L-02

MIDBLOCK CROSSINGS
LIGHTING CRITERIA

(MID BLOCK CROSSING SPRUCE CREEK RD)
(SPRUCE CREEK RD & OAK ST)
(MID BLOCK CROSSING POWER AVE)
(MID BLOCK CROSSING AT HERBERT ST & 6TH ST)

Wind speed	140 mph
Vertical Illuminance	1.5 Std.Foot Candles

BOARDWALK
LIGHTING CRITERIA

(STA. 29+64.06 – 36+79.20)

Wind speed	140 mph
Average Initial Illumination	2.5 Std. Foot Candles
Uniformity Ratio Avg./Min.	4:1 or Less
Max./Min.	10:1 or Less

LEGEND

SYMBOLS	DESCRIPTION
	REPLACEMENT OF LUMINAIRE AND BRACKET ARM ON EXISTING UTILITY POLE (SEE LIGHTING DATA TABLE FOR INFORMATION)
	PROPOSED UTILITY LIGHT POLE (SEE LIGHTING DATA TABLE FOR INFORMATION)
	PROPOSED POST MOUNTED BOARDWALK LUMINAIRE ON 6"X6" WOOD POST AS DETAILED IN ROADWAY PLANS SHEET B1-04 (SEE SHEET L-10 FOR POLE 10 AND POLE 21)
	EXISTING UTILITY LIGHT TO REMAIN
	REMOVE LUMINAIRE AND BRACKET ARM ON EXISTING UTILITY POLE
	PROPOSED CONCRETE PEDESTAL WITH ELECTRICAL METER AND DISCONNECT
	PROPOSED LIGHTING PULL BOX
—•— — —• ——	PROPOSED OPEN TRENCH CONDUIT WITH CONDUCTORS INSIDE. RUN 2 – #6 CONDUCTORS AND #6 GROUND INSIDE CONDUIT.
—••— ••— •••—	PROPOSED BOARDWALK MOUNTED CONDUIT WITH CONDUCTORS INSIDE. RUN 2 – #6 CONDUCTORS AND #6 GROUND INSIDE CONDUIT.

THE OFFICIAL RECORD OF THIS SHEET IS THE ELECTRONIC FILE DIGITALLY SIGNED AND SEALED UNDER RULE 61G15-23.004, F.A.C.

REVISIONS	
DATE	DESCRIPTION

CITY OF PORT ORANGE
1000 CITY CENTER CIRCLE
PORT ORANGE, FL 32129

HANNAH E. NEWHARD, P.E.
P.E. LICENSE NUMBER 99625

STANLEY CONSULTANTS, INC.
80 SPRING VISTA DRIVE
DEBARY, FL 32713

SJR2C LOOP TRAIL
FROM SOUTH OF SELIN CIR TO HERBERT ST

ROAD	COUNTY	FINANCIAL PROJECT ID
SPRUCE CREEK RD	VOLUSIA	439865-3-54-01

LIGHTING LEGEND

SHEET NO. L-03

LIGHTING DATA TABLE

POLE NO.	LIGHT POLE COORDINATES (X,Y)	STATION / ROADWAY	OFFSET / SETBACK	LUMINAIRE MODEL	LUMEN OUTPUT	DISTRIBUTION TYPE	CCT	LUMINAIRE WATTAGE	NO. OF LUMINAIRES	SHIELDING	ARM LENGTH / MOUNTING HEIGHT	TILT (DEGREES)	POLE TYPE	POLE OWNER / MAINTAINING AGENCY	COLOR OF LUMINAIRE	DESCRIPTION OF WORK
MID BLOCK CROSSING SPRUCE CREEK RD																
1	657966.71,1745276.60	2+28	17.18 LT	ARCH-M-PA2-90-730-U-T3-HSS-93	10120	III	3000	93	1	HOUSE SIDE	6'	0	PROPOSED UTILITY POLE	FPL	GREY	INSTALL POLE, LUMINAIRE & ARM (UTILITY WORK)
		BL CONSTRUCTION	5' EOTL								29'			PORT ORANGE		
2	657930.47,1745371.00	3+29	31.91 LT	ARCH-M-PA2-90-730-U-T3-HSS-93	10120	III	3000	93	1	HOUSE SIDE	6'	0	PROPOSED UTILITY POLE	FPL	GREY	INSTALL POLE, LUMINAIRE & ARM (UTILITY WORK)
		BL CONSTRUCTION	19' EOTL								29'			PORT ORANGE		
SPRUCE CREEK RD & OAK ST																
3	657810.60,1745612.99	6+13	27.00 LT	7500 LUMENARCH-S-PA1-60-730	5447	III	3000	59	1	N/A	6'	0	PROPOSED UTILITY POLE	FPL	GREY	INSTALL POLE, LUMINAIRE & ARM (UTILITY WORK)
		BL CONSTRUCTION	15' EOTL								29'			PORT ORANGE		
4	657766.58,1745681.30	6+94	21.58 LT	7500 LUMENARCH-S-PA1-60-730	5447	III	3000	59	1	N/A	6'	0	EXISTING UTILITY POLE	FPL	GREY	REPLACE LUMINAIRE & ARM (UTILITY WORK)
		BL CONSTRUCTION	9' FOC								29'			PORT ORANGE		
5	657701.85,1745694.06	7+42	65.91 LT	7500 LUMENARCH-S-PA1-60-730	5447	III	3000	59	1	N/A	6'	0	PROPOSED UTILITY POLE	FPL	GREY	INSTALL POLE, LUMINAIRE, & ARM (UTILITY WORK)
		BL CONSTRUCTION	2' FOC								29'			PORT ORANGE		
6	657855.46,1745740.05	6+88	84.80 RT	7500 LUMENARCH-S-PA1-60-730	5447	III	3000	59	1	N/A	6'	0	EXISTING UTILITY POLE	FPL	GREY	REPLACE LUMINAIRE, & ARM (UTILITY WORK)
		BL CONSTRUCTION	6' FOC								29'			PORT ORANGE		
7	657681.36,1745785.94	8+28	27.54 LT	7500 LUMENARCH-S-PA1-60-730	5447	III	3000	59	1	N/A	6'	0	PROPOSED UTILITY POLE	FPL	GREY	INSTALL POLE, LUMINAIRE, & ARM (UTILITY WORK)
		BL CONSTRUCTION	33' EOTL								29'			PORT ORANGE		
MID BLOCK CROSSING POWERS AVE																
8	656832.64,1747162.66	24+51	21.05 RT	7500 LUMENARCH-S-PA1-60-730	5447	III	3000	59	1	N/A	6'	0	PROPOSED UTILITY POLE	FPL	GREY	INSTALL POLE, LUMINAIRE, & ARM (UTILITY WORK)
		BL CONSTRUCTION	4' BGR								29'			PORT ORANGE		
9	656906.65,1747204.17	24+61	105.59 RT	7500 LUMENARCH-S-PA1-60-730	5447	III	3000	59	1	N/A	6'	0	PROPOSED UTILITY POLE	FPL	GREY	INSTALL POLE, LUMINAIRE, & ARM (UTILITY WORK)
		BL CONSTRUCTION	5' EOTL								29'			PORT ORANGE		
BOARDWALK LIGHTING																
10	656661.47,1747622.17	29+85	24.87 RT	CLE17T4A-FGC-T1AHS-P10-30K	2432	I	3000	22.8	1	HOUSE SIDE	POST TOP	0	PROPOSED WOOD POST	PORT ORANGE	DARK BRONZE	INSTALL POST TOP LUMINAIRE ON WOOD POST
		BL CONSTRUCTION	N/A								13'			PORT ORANGE		
11	656619.10,1747662.83	30+43	21.04 RT	CLE17T4A-FGC-T1AHS-P10-30K	2432	I	3000	22.8	1	HOUSE SIDE	POST TOP	0	PROPOSED WOOD POST	PORT ORANGE	DARK BRONZE	INSTALL POST TOP LUMINAIRE ON WOOD POST
		BL CONSTRUCTION	N/A								13'			PORT ORANGE		
12	656588.33,1747720.68	31+16	20.88 RT	CLE17T4A-FGC-T1AHS-P10-30K	2432	I	3000	22.8	1	HOUSE SIDE	POST TOP	0	PROPOSED WOOD POST	PORT ORANGE	DARK BRONZE	INSTALL POST TOP LUMINAIRE ON WOOD POST
		BL CONSTRUCTION	N/A								13'			PORT ORANGE		
13	656565.39,1747776.12	31+76	20.82 RT	CLE17T4A-FGC-T1AHS-P10-30K	2432	I	3000	22.8	1	HOUSE SIDE	POST TOP	0	PROPOSED WOOD POST	PORT ORANGE	DARK BRONZE	INSTALL POST TOP LUMINAIRE ON WOOD POST
		BL CONSTRUCTION	N/A								13'			PORT ORANGE		
14	65655.0.08,1747838.32	32+48	21.17 RT	CLE17T4A-FGC-T1AHS-P10-30K	2432	I	3000	22.8	1	HOUSE SIDE	POST TOP	0	PROPOSED WOOD POST	PORT ORANGE	DARK BRONZE	INSTALL POST TOP LUMINAIRE ON WOOD POST
		BL CONSTRUCTION	N/A								13'			PORT ORANGE		
15	656547.13,1747908.25	33+18	21.19 RT	CLE17T4A-FGC-T1AHS-P10-30K	2432	I	3000	22.8	1	HOUSE SIDE	POST TOP	0	PROPOSED WOOD POST	PORT ORANGE	DARK BRONZE	INSTALL POST TOP LUMINAIRE ON WOOD POST
		BL CONSTRUCTION	N/A								13'			PORT ORANGE		
16	656544.19,1747978.19	33+88	21.22 RT	CLE17T4A-FGC-T1AHS-P10-30K	2432	I	3000	22.8	1	HOUSE SIDE	POST TOP	0	PROPOSED WOOD POST	PORT ORANGE	DARK BRONZE	INSTALL POST TOP LUMINAIRE ON WOOD POST
		BL CONSTRUCTION	N/A								13'			PORT ORANGE		
17	656541.24,1748048.13	34+58	21.24 RT	CLE17T4A-FGC-T1AHS-P10-30K	2432	I	3000	22.8	1	HOUSE SIDE	POST TOP	0	PROPOSED WOOD POST	PORT ORANGE	DARK BRONZE	INSTALL POST TOP LUMINAIRE ON WOOD POST
		BL CONSTRUCTION	N/A								13'			PORT ORANGE		
18	656538.29,1748118.07	35+28	21.26 RT	CLE17T4A-FGC-T1AHS-P10-30K	2432	I	3000	22.8	1	HOUSE SIDE	POST TOP	0	PROPOSED WOOD POST	PORT ORANGE	DARK BRONZE	INSTALL POST TOP LUMINAIRE ON WOOD POST
		BL CONSTRUCTION	N/A								13'			PORT ORANGE		
19	656535.65,1748188.02	35+98	21.58 RT	CLE17T4A-FGC-T1AHS-P10-30K	2432	I	3000	22.8	1	HOUSE SIDE	POST TOP	0	PROPOSED WOOD POST	PORT ORANGE	DARK BRONZE	INSTALL POST TOP LUMINAIRE ON WOOD POST
		BL CONSTRUCTION	N/A								13'			PORT ORANGE		
20	656532.42,1748257.94	36+68	21.33 RT	CLE17T4A-FGC-T1AHS-P10-30K	2432	I	3000	22.8	1	HOUSE SIDE	POST TOP	0	PROPOSED WOOD POST	PORT ORANGE	DARK BRONZE	INSTALL POST TOP LUMINAIRE ON WOOD POST
		BL CONSTRUCTION	N/A								13'			PORT ORANGE		
21	656521.98,1748314.90	37+26	13.31 RT	CLE17T4A-FGC-T1AHS-P10-30K	2432	I	3000	22.8	1	HOUSE SIDE	POST TOP	0	PROPOSED WOOD POST	PORT ORANGE	DARK BRONZE	INSTALL POST TOP LUMINAIRE ON WOOD POST
		BL CONSTRUCTION	N/A								13'			PORT ORANGE		
MID BLOCK CROSSING AT HERBERT ST & 6TH ST																
22	656523.95,1748342.75	37+53	16.53 RT	ARCH-N-PA1-40-730-U-T3-HSS-42	3631	III	3000	42	1	HOUSE SIDE	6'	0	EXISTING UTILITY POLE	FPL	GREY	REPLACE LUMINAIRE, & ARM (UTILITY WORK)
		BL CONSTRUCTION	8' EOTL								29'			PORT ORANGE		
23	656463.24,1748384.28	37+98	42.43 LT	ARCH-N-PA1-40-730-U-T3-HSS-42	3631	III	3000	42	1	HOUSE SIDE	6'	0	PROPOSED UTILITY POLE	FPL	GREY	INSTALL POLE, LUMINAIRE & ARM (UTILITY WORK)
		BL CONSTRUCTION	9' EOTL								29'			PORT ORANGE		

THE OFFICIAL RECORD OF THIS SHEET IS THE ELECTRONIC FILE DIGITALLY SIGNED AND SEALED UNDER RULE 61G15-23.004, F.A.C.

REVISIONS	
DATE	DESCRIPTION

CITY OF PORT ORANGE
1000 CITY CENTER CIRCLE
PORT ORANGE, FL 32129

HANNAH E. NEWHARD, P.E.
P.E. LICENSE NUMBER 99625

STANLEY CONSULTANTS, INC.
80 SPRING VISTA DRIVE
DEBARY, FL 32713

SJR2C LOOP TRAIL
FROM SOUTH OF SELIN CIR TO HERBERT ST

ROAD	COUNTY	FINANCIAL PROJECT ID
SPRUCE CREEK RD	VOLUSIA	439865-3-54-01

LIGHTING DATA TABLE

SHEET NO. L-04

Myers, Gabriela 5/20/2025 2:25:46 PM Myers, Gabriela Z:\2016 Projects\10962 (Port Orange)\TWO 09 - SUNTrail (SJR2C Loop) Spruce Creek Rd\CAD\439865\Lighting\PLDTLT01.dwg

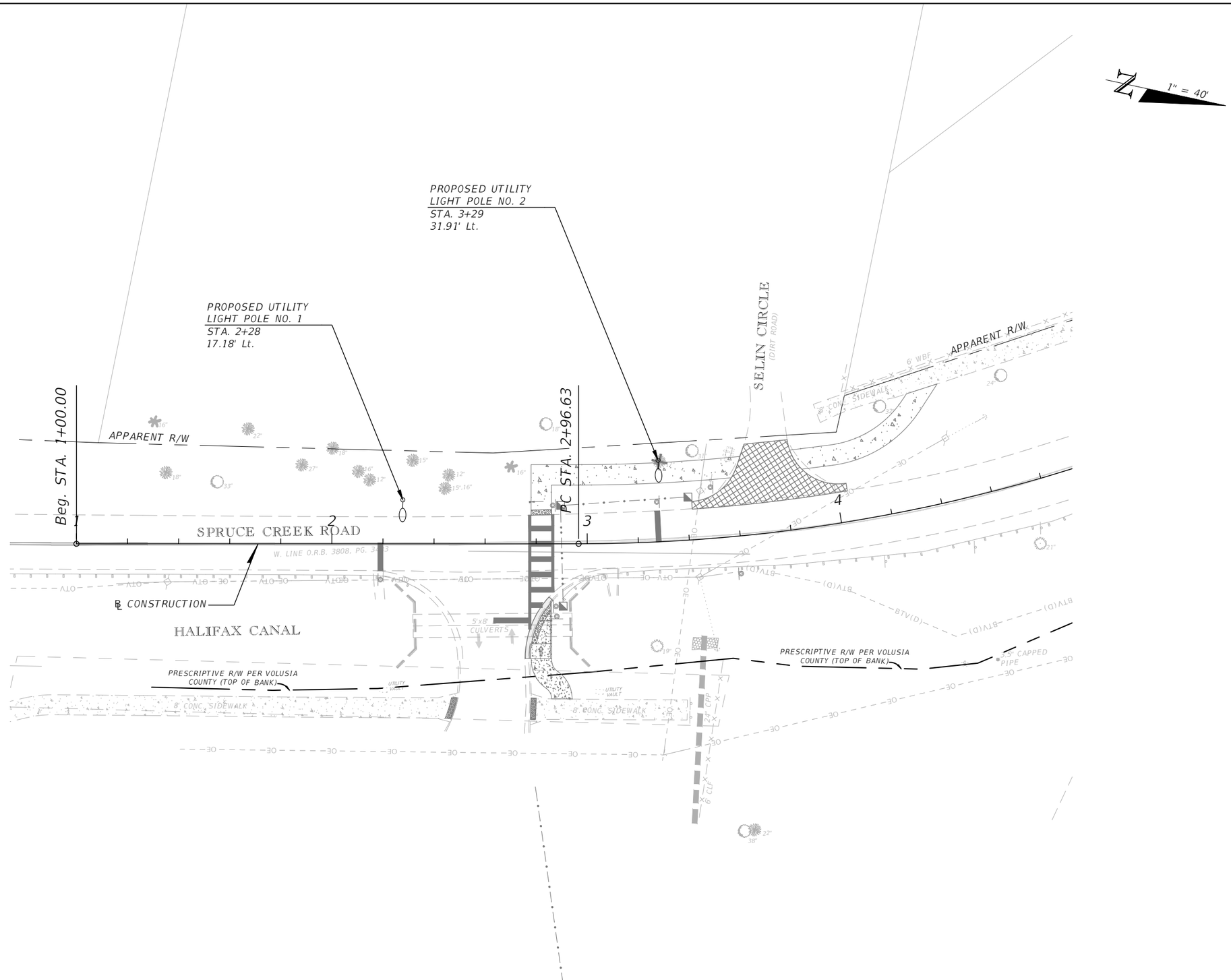

THE OFFICIAL RECORD OF THIS SHEET IS THE ELECTRONIC FILE DIGITALLY SIGNED AND SEALED UNDER RULE 61G15-23.004, F.A.C.

REVISIONS	
DATE	DESCRIPTION

CITY OF PORT ORANGE
1000 CITY CENTER CIRCLE
PORT ORANGE, FL 32129

HANNAH E. NEWHARD, P.E.
P.E. LICENSE NUMBER 99625

STANLEY CONSULTANTS, INC.
80 SPRING VISTA DRIVE
DEBARY, FL 32713

SJR2C LOOP TRAIL
FROM SOUTH OF SELIN CIR TO HERBERT ST

ROAD	COUNTY	FINANCIAL PROJECT ID
SPRUCE CREEK RD	VOLUSIA	439865-3-54-01

LIGHTING PLAN SHEET

SHEET NO. L-05

Myers, Gabriela 5/20/2025 2:26:17 PM Z:\2016 Projects\10962 (Port Orange)\TWO 09 - SUNTrail (SJR2C Loop) Spruce Creek Rd\CAD\439865\Lighting\PLANLT01.dwg

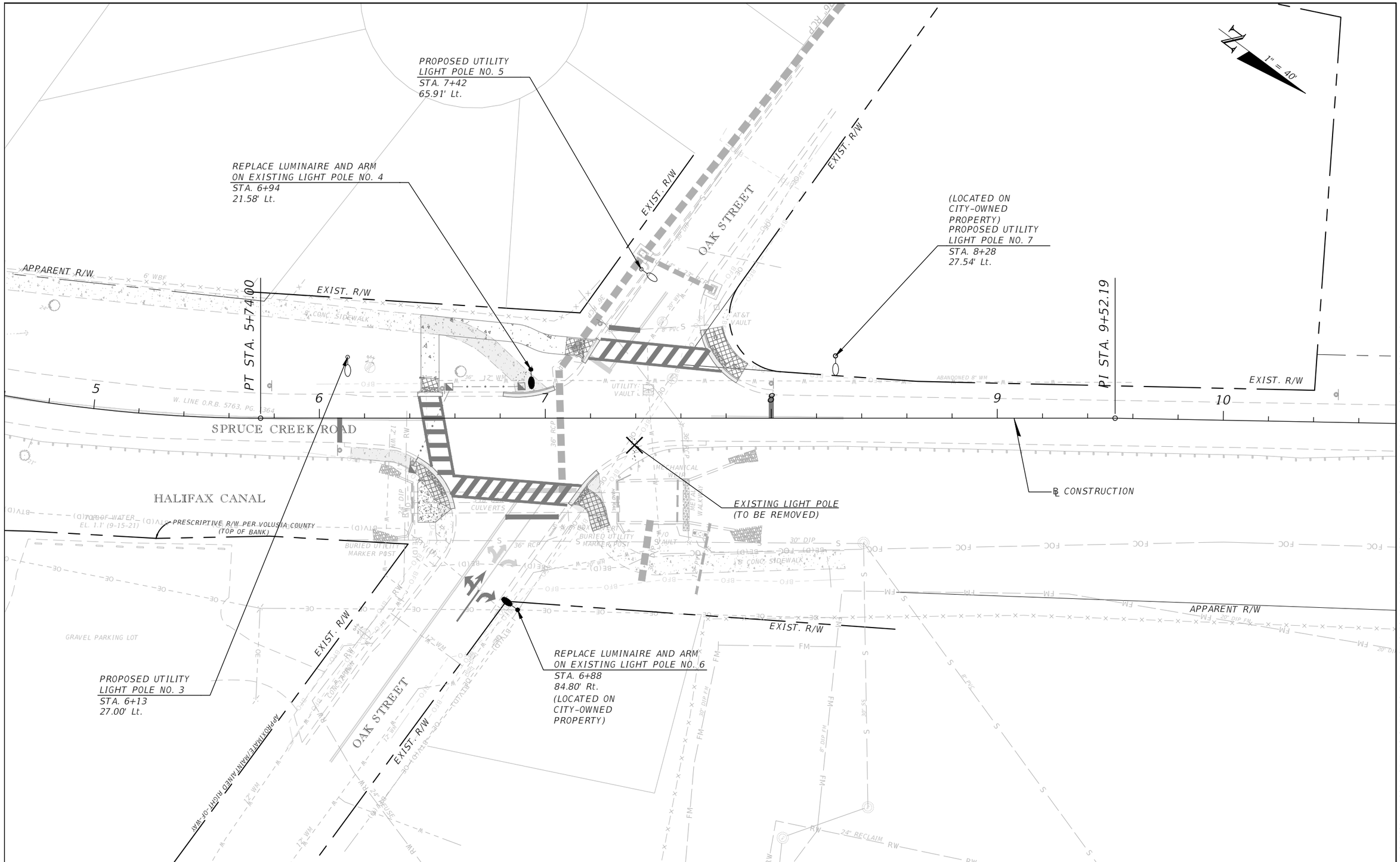

THE OFFICIAL RECORD OF THIS SHEET IS THE ELECTRONIC FILE DIGITALLY SIGNED AND SEALED UNDER RULE 61G15-23.004, F.A.C.

REVISIONS	
DATE	DESCRIPTION

CITY OF PORT ORANGE
1000 CITY CENTER CIRCLE
PORT ORANGE, FL 32129

HANNAH E. NEWHARD, P.E.
P.E. LICENSE NUMBER 99625
STANLEY CONSULTANTS, INC.
80 SPRING VISTA DRIVE
DEBARY, FL 32713

SJR2C LOOP TRAIL
FROM SOUTH OF SELIN CIR TO HERBERT ST

ROAD	COUNTY	FINANCIAL PROJECT ID
SPRUCE CREEK RD	VOLUSIA	439865-3-54-01

LIGHTING PLAN SHEET

SHEET NO.
L-06

Myers, Gabriela 5/20/2025 2:26:22 PM Z:\2016 Projects\10962 (Port Orange)\TWO 09 - SUNTrail (SJR2C Loop) Spruce Creek Rd\CAD\439865\Lighting\PLANLT01.dwg

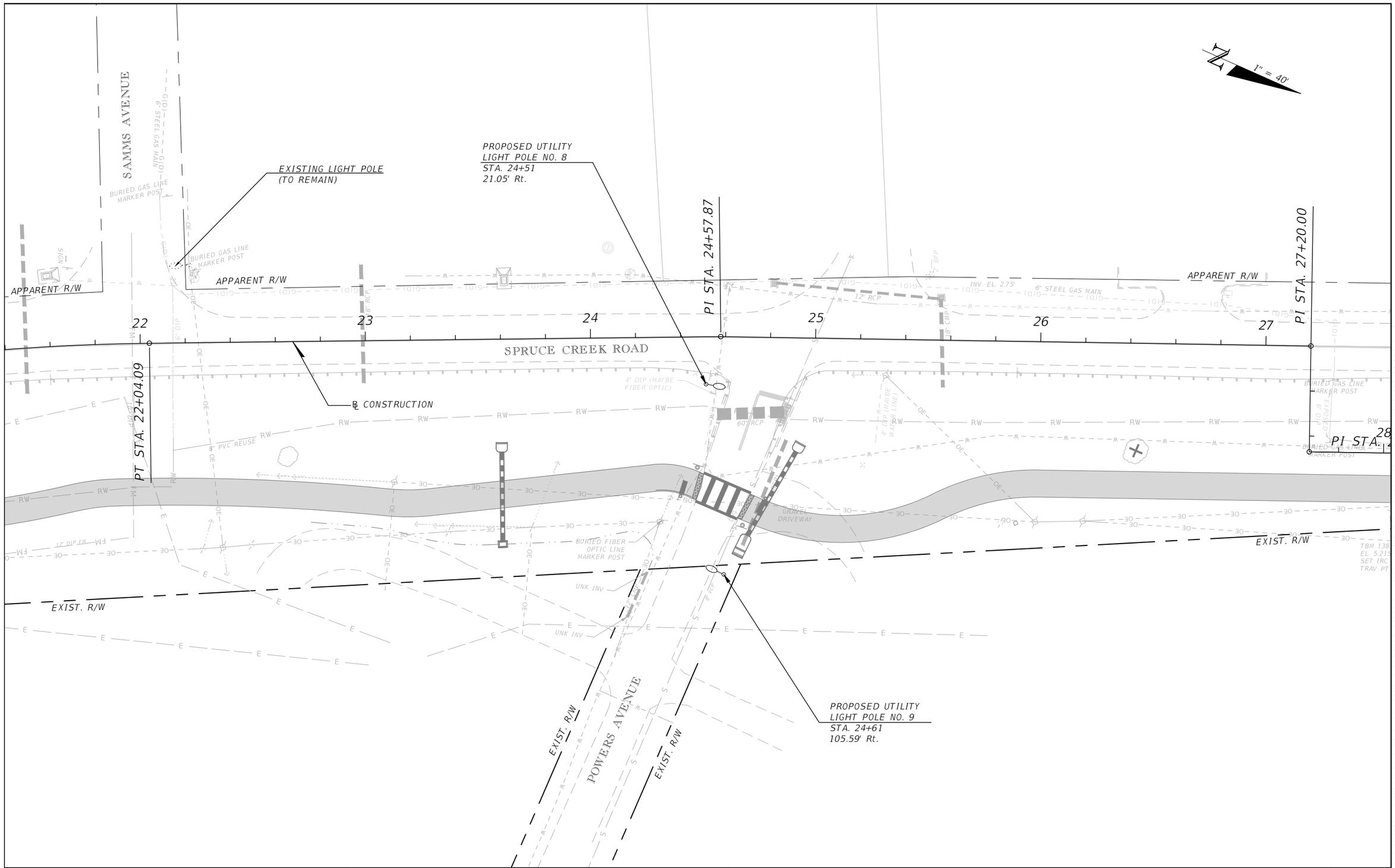

THE OFFICIAL RECORD OF THIS SHEET IS THE ELECTRONIC FILE DIGITALLY SIGNED AND SEALED UNDER RULE 61G15-23.004, F.A.C.

REVISIONS	
DATE	DESCRIPTION

CITY OF PORT ORANGE
1000 CITY CENTER CIRCLE
PORT ORANGE, FL 32129

HANNAH E. NEWHARD, P.E.
P.E. LICENSE NUMBER 99625

STANLEY CONSULTANTS, INC.
80 SPRING VISTA DRIVE
DEBARY, FL 32713

SJR2C LOOP TRAIL
FROM SOUTH OF SELIN CIR TO HERBERT ST

ROAD	COUNTY	FINANCIAL PROJECT ID
SPRUCE CREEK RD	VOLUSIA	439865-3-54-01

LIGHTING PLAN SHEET

SHEET NO. L-07

Myers, Gabriela 5/20/2025 2:26:27 PM Z:\2016 Projects\10962 (Port Orange)\TWO 09 – SUNTrail (SJR2C Loop) Spruce Creek Rd\CAD\439865\Lighting\PLANLT01.dwg

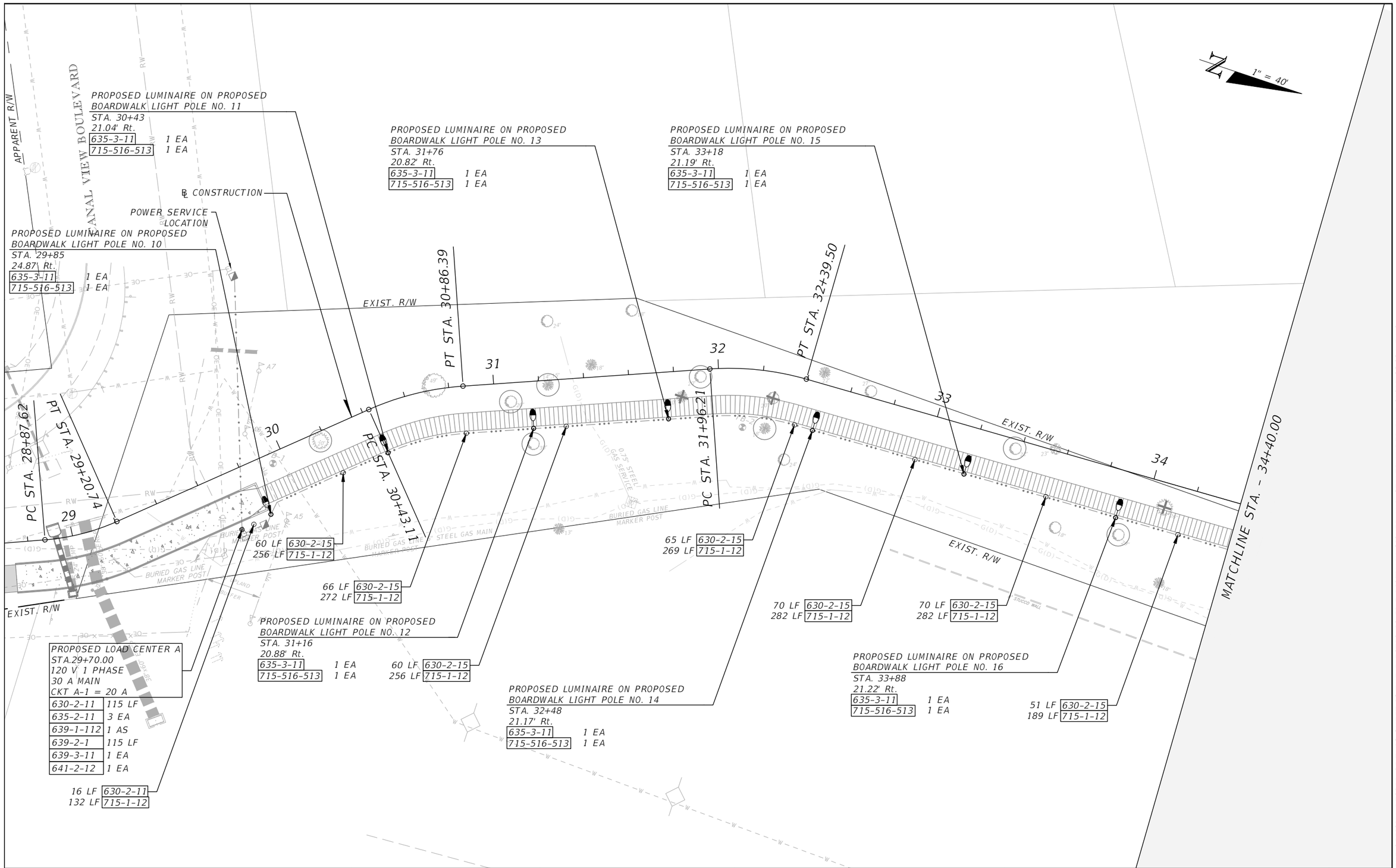

THE OFFICIAL RECORD OF THIS SHEET IS THE ELECTRONIC FILE DIGITALLY SIGNED AND SEALED UNDER RULE 61G15-23.004, F.A.C.

REVISIONS	
DATE	DESCRIPTION

CITY OF PORT ORANGE
1000 CITY CENTER CIRCLE
PORT ORANGE, FL 32129

HANNAH E. NEWHARD, P.E.
P.E. LICENSE NUMBER 99625

STANLEY CONSULTANTS, INC.
80 SPRING VISTA DRIVE
DEBARY, FL 32713

SJR2C LOOP TRAIL
FROM SOUTH OF SELIN CIR TO HERBERT ST

ROAD	COUNTY	FINANCIAL PROJECT ID
SPRUCE CREEK RD	VOLUSIA	439865-3-54-01

LIGHTING PLAN SHEET

SHEET NO. L-08

Myers, Gabriela 5/20/2025 2:26:32 PM Z:\2016 Projects\10962 (Port Orange)\TWO 09 - SUNTrail (SJR2C Loop) Spruce Creek Rd\CAD\439865\Lighting\PLANLT01.dwg

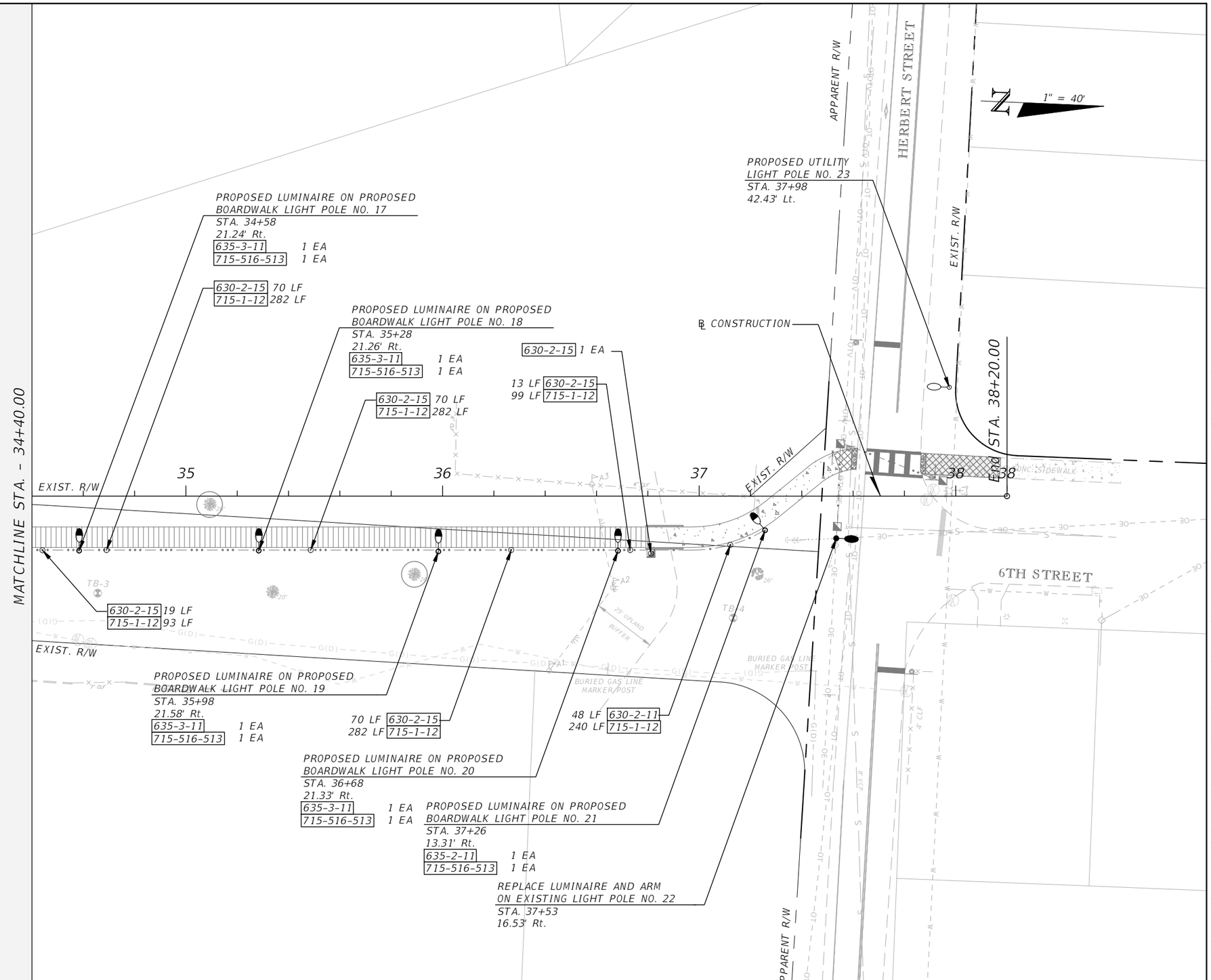

THE OFFICIAL RECORD OF THIS SHEET IS THE ELECTRONIC FILE DIGITALLY SIGNED AND SEALED UNDER RULE 61G15-23.004, F.A.C.

REVISIONS	
DATE	DESCRIPTION

CITY OF PORT ORANGE
1000 CITY CENTER CIRCLE
PORT ORANGE, FL 32129

HANNAH E. NEWHARD, P.E.
P.E. LICENSE NUMBER 99625

STANLEY CONSULTANTS, INC.
80 SPRING VISTA DRIVE
DEBARY, FL 32713

SJR2C LOOP TRAIL
FROM SOUTH OF SELIN CIR TO HERBERT ST

ROAD	COUNTY	FINANCIAL PROJECT ID
SPRUCE CREEK RD	VOLUSIA	439865-3-54-01

LIGHTING PLAN SHEET

SHEET NO.
L-09

Myers, Gabriela 5/20/2025 2:26:37 PM Z:\2016 Projects\10962 (Port Orange)\TWO 09 - SUNTrail (SJR2C Loop) Spruce Creek Rd\CAD\439865\Lighting\PLANLT01.dwg

GENERAL NOTES:

DESIGN SPECIFICATIONS:

1. LRFD BRIDGE DESIGN SPECIFICATIONS, 9TH EDITION.
2. LRFD SPECIFICATIONS FOR STRUCTURAL SUPPORTS FOR HIGHWAY SIGNS, LUMINARIES AND TRAFFIC SIGNALS, 1ST EDITION (2015) WITH 2017, 2018, 2019, AND 2020 INTERIMS (LRFD LTS-1).
3. FDOT MODIFICATIONS TO LRFD LTS-1, JANUARY 2024 EDITION.
4. FDOT DESIGN MANUAL, JANUARY 2024 EDITION.

LOCATIONS

SEE LIGHTING DATA TABLE SHEET

ENVIRONMENTAL CLASSIFICATION

CONCRETE: EXTREMELY AGGRESSIVE

DECORATIVE LIGHT POST CYLINDRICAL FOUNDATION NOTES:

1. THE COST OF THE FOOTING IS INCLUDED IN THE PAY ITEM NUMBER FOR LIGHT POLE.
2. THE FOUNDATIONS ARE BASED UPON THE FOLLOWING SOIL CRITERIA:
   - CLASSIFICATION = COHESIONLESS (FINE SAND)
   - FRICTION ANGLE = 29 DEGREES
   - EFFECTIVE UNIT WEIGHT = 45 PCF (ASSUMED SATURATED)
3. DESIGN WIND SPEED = 140 MPH.
4. DESIGN LOADS (FACTORED) NOT TO EXCEED:
   - MOMENT = 5.463 FT * KIP
   - TORSION = 0.0 FT * KIP
   - AXIAL = 0.421 KIP
   - SHEAR = 0.524 KIP
5. LIGHT POST MUST BE CUT, DRILLED AND FABRICATED PRIOR TO PRESSURE THREATMENT WITH PRESERVATIVES. TREAT IN ACCORDANCE WITH SPECIFICATION 955. LIGHT POST MUST BE SELECT STRUCTUREAL SOTHERN PINE FURNISHED PER THE REQUIREMENTS OF THE AMERICAN SOFTWOOD LUMBER STANDARDS, PS20-20

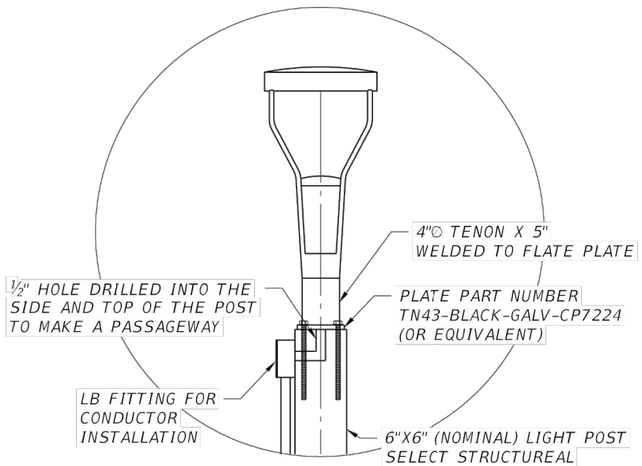

DETAIL A

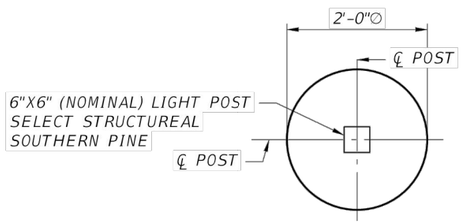

SECTION A-A

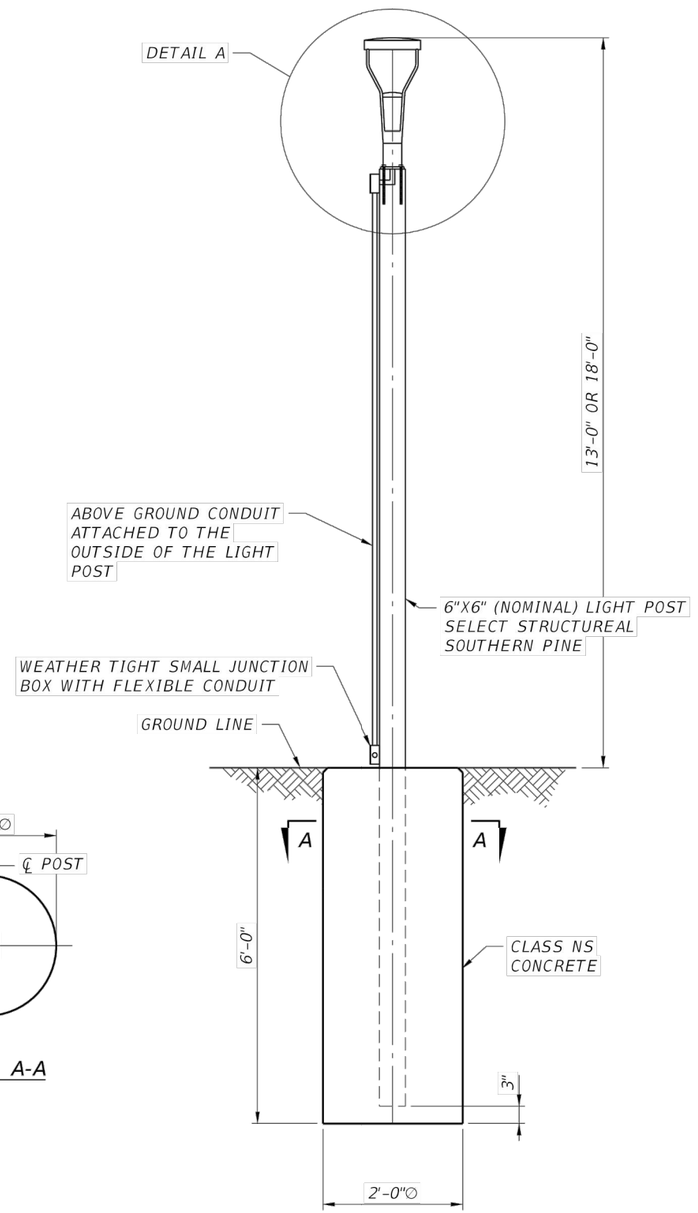

ELEVATION

THE OFFICIAL RECORD OF THIS SHEET IS THE ELECTRONIC FILE DIGITALLY SIGNED AND SEALED UNDER RULE 61G15-23.004, F.A.C.

REVISIONS	
DATE	DESCRIPTION

CITY OF PORT ORANGE
1000 CITY CENTER CIRCLE
PORT ORANGE, FL 32129

MARK NIEDERMANN, P.E.
P.E. LICENSE NUMBER 45957
FLORIDA BRIDGE & TRANSPORTATION, INC.
633 DARTMOUTH STREET
ORLANDO, FL 32804

SJR2C LOOP TRAIL
FROM SOUTH OF SELIN CIR TO HERBERT ST

ROAD	COUNTY	FINANCIAL PROJECT ID
SPRUCE CREEK RD	VOLUSIA	439865-3-54-01

LIGHT POST DETAILS

SHEET NO. L-10

EJCDC Addendum No. 1 Dated June 2, 2025

consisting of 1 page

CITY OF PORT ORANGE
PURCHASING DIVISION
1000 CITY CENTER CIRCLE
PORT ORANGE, FLORIDA 32129
TELEPHONE 386-506-5740
purchdiv@port-orange.org

ADDENDUM #1
June 2, 2025

ITB #25-13 439865-3-54-01 SJR2C Loop Trail (Spruce Creek Rd.) From South of Selin Circle to Herbert Street

---

To All Respondents:
The following changes, clarifications and additions are hereby made part of the ITB for the above referenced project dated May 30, 2025 and prepared by the City of Port Orange Purchasing Division as fully and completely as if the same were fully set forth therein. It is the sole responsibility of the respondent to confirm that all addenda have been received prior to submitting a bid and acknowledge such in the ITB documents.

A. **CLARIFICATIONS:**
N/A

B. **CHANGES TO SPECIFICATIONS:**
REVISED SJR2C Loop Trail (Spruce Creek Rd.) Plans hereby replaces the original file SJR2C Loop Trail (Spruce Creek Rd.) Plans and is posted as a separate document on https://www.port-orange.org/bids.aspx?bidID=223 and www.demandstar.com.

C. **QUESTIONS AND ANSWERS:**
N/A

In all other respects, except as specifically stated herein, the subject *ITB #25-13 439865-3-54-01 SJR2C Loop Trail (Spruce Creek Rd.) From South of Selin Circle to Herbert Street* remains unchanged.

END OF ADDENDUM #1

EJCDC Addendum No. 2 Dated June 20, 2025

consisting of 7 pages

CITY OF PORT ORANGE
PURCHASING DIVISION
1000 CITY CENTER CIRCLE
PORT ORANGE, FLORIDA 32129
TELEPHONE 386-506-5718
purchdiv@port-orange.org

ADDENDUM #2
June 20, 2025

ITB #25-13 439865-3-54-01 SJR2C Loop Trail (Spruce Creek Rd.) From South of Selin Circle to Herbert Street

---

To All Bidders:
The following changes, clarifications and additions are hereby made part of the ITB for the above referenced project dated May 30, 2025 and prepared by the City of Port Orange Purchasing Division as fully and completely as if the same were fully set forth therein. It is the sole responsibility of the bidder to confirm that all addenda have been received prior to submitting a bid and acknowledge such in the ITB documents.

A. CLARIFICATIONS:
None

B. CHANGES TO ITB DOCUMENT:
None

C. QUESTIONS AND ANSWERS:

Question #1
Do Davis-Bacon Wages apply to this project?
Answer #1
No.

Question #2
How high should the canpy be cleared for the length of the boardwalk?
Answer #2
Final tree trimming is required to 15’ clearance above the boardwalk.

Question #3
What pay item should include the removal of existing pipes and end treatments?
Answer #3
The removal of the existing pipes and end treatments should be included under Pay Item 0110 1 1 CLEARING AND GRUBBING. Per FDOT Specifications 430-12.2 the cost of excavating and removing the old pipe and of its disposal will be included in the contract unit price for Clearing and Grubbing. Per FDOT Specifications 110-2.1 Clearing and Grubbing includes the removal and disposal of drainage structures.

Question #4
What are the approved "optional materials" for all pipe culverts listed on the bid form?
Answer #4
All proposed pipes are to be RCP.

Question #5
Is it the contractor's responsibility to furnish and install item # CITY-01 18" wapro stainless wastop inline check valve?
Answer #5
Yes

Question #6
Are there additional specs or details for furnishing and installing item # CITY-01 18" wapro stainless wastop inline check valve?
Answer #6
Additional details and specifications for the wapro stainless wastop inline check valve are attached to this addendum.

Question #7
Is Port Orange Utilities to provide all Utility Light Poles, Arms & Fixtures? Are they also going to install these Light Poles & Fixtures?
Answer #7
The power company FPL will provide and install all utility light poles, arms and fixtures for the roadway lighting.

Question #8
Is the Contractor to provide and install all underground conduit & wiring for the Utility Light Pole Fixtures? Or is this also to be done by Port Orange?
Answer #8
The power company FPL will provide and install all underground conduit and wiring for the roadway lighting.

Question #9
Are there any restrictions regarding underground conduit & wire that is to be run through intersections? Directional Bore required?
Answer #9
See answer to Question #8.

Question #10
Who is providing the Wood Posts & Post-Top Fixtures for the Boardwalk Lighting?
Answer #10
The Contractor will provide and install all lighting equipment for the boardwalk including the wood posts and post top fixtures. The power company FPL will provide service to the Service Point and the Contraoctor is responsible for all boardwalk lighting beyond that point.

Question #11
Who is providing the 3' x 6' Concrete Bases for the Wood Posts & Post-Top Fixtures (Boardwalk Lighting)?
Answer #11
The Contractor will provide and install all lighting equipment for the boardwalk including the 3' x 6' concrete bases, which are included under Pay Items 0715 516-513 and 0715 516-518.

Question #12
Is there a specification for the conduit & wiring methods used for the Boardwalk Lighting?
Answer #12
Conduit and Wiring methods should follow National Electrical Code (NEC) and FDOT standards.

Question #13
Can you please provide the engineer's cost estimate for this project?
Answer #13
$2,333,603.00

Question #14
Will design alternatives be accepted concerning the boardwalk construction?
Answer #14
Due to the process and timeframes involved in obtaining concurrence and the State's approved timeframe for construction, design alternatives for the boardwalk cannot be considered.

Question #15
Will the bid schedule be provided in Excel format?
Answer #15
No.

In all other respects, except as specifically stated herein, the subject ***ITB #25-13 439865-3-54-01 SJR2C Loop Trail (Spruce Creek Rd.) From South of Selin Circle to Herbert Street*** remains unchanged.

END OF ADDENDUM #2

WASTOP®



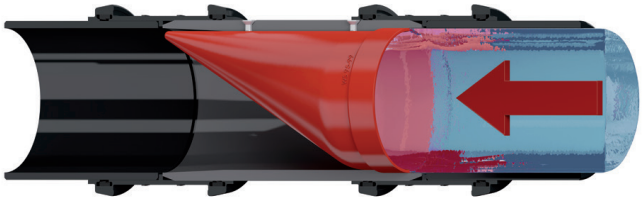

WASTOP® INLINE CHECK VALVE

We all know someone who has been affected by it. We see it, feel it and experience it. Climate change and rising sea levels are affecting us all. Through the innovation of WaStop Inline Check Valve, we at Wapro have prevented thousands of floods worldwide.

In order to protect against flooding, we have engineered the WaStop inline check valve to ensure the lowest possible opening pressure whilst maintaining the best possible seal against backflow. This, combined with the lowest headloss available, gives the most efficient flow conditions, ensuring the fastest evacuation of water. An essential quality of check valves used to protect people and property. WaStop protects.

ADVANTAGES OF WASTOP®

- Easy installation saving on construction & installation costs
- Superior construction materials
- Lowest headloss amongst inline check valves
- Low life cycle cost
- No moving parts - virtually maintenance-free
- Many dimensions 75-2000mm std & non-standard pipes
- Stops liquids, gases, odours, insects and small animals
- Stops backflow effectively even in low flow events

APPLICATIONS - WASTE WATER, SURFACE WATER, TIDAL AREAS

We at Wapro know that any solution for flood prevention or odour control needs to function. Simply, effectively. That's why, when we invented the WaStop inline check valve in 2000, we had one thought in mind. Instant automatic protection. Working on differential pressure the WaStop functions autonomously, without human interaction, without electricity, without constant maintenance. It just works.

To invent the best inline check valve on the market our engineers went one step further. We also thought about the different parts of the process and who would be affected by the design of the valve. With function top of mind our engineers developed a valve that works in stormwater, sewer, odour applications, as well as ensuring to cover the range of sizes of existing pipes to enable retro-fitting with ease. We cover all sizes of pipes, all shapes, from 75mm-2000mm. As standard. Off the shelf in most cases, for fast delivery. We keep stock to ensure the contractor and end user can keep time and costs to a minimum.



WASTOP®

BENEFITS OF SUPERIOR CONSTRUCTION

WaStop® is designed to provide asset and property owners' peace of mind. Simply the most reliable, high quality inline check valve on the market.

HOUSING & SEAL

- Thin stainless housing
- Perfect function regardless of the existing pipe quality
- Peace of mind knowing the seal is 100% tight
- Low life-cycle cost
- Lower energy costs
- Quick, easy installation

DOUBLE COLLARS

- Fast deliveries
- Easy installation for inlet or outlet installation
- Reduces costs by having one product for multiple installations situations
- Helps you meet your budget

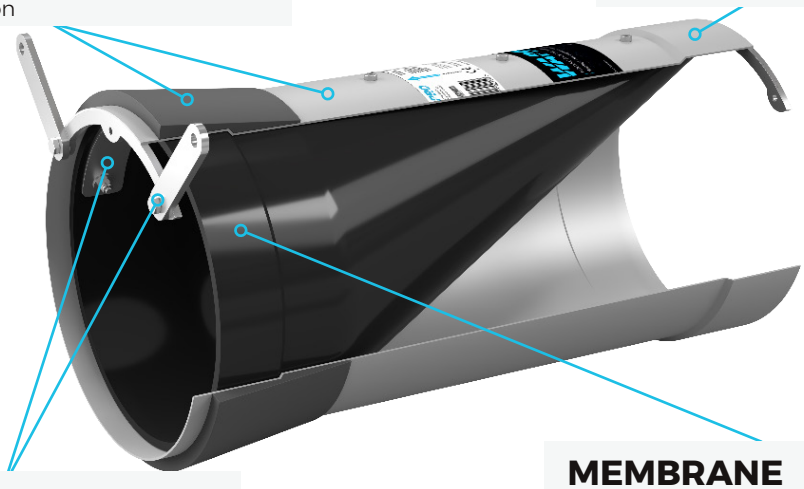

FIXATION MATERIAL

- Long life expectancy and low life-cycle cost with high quality materials
- Peace of mind - engineered product that exceeds expectations

MEMBRANE

- Protection even in low flow events
- Pulsating flow reducing sedimentation up and downstream
- Extremely low headloss
- Low maintenance costs
- Memory membrane - doesn't sag

THE VERSATILITY OF WASTOP®

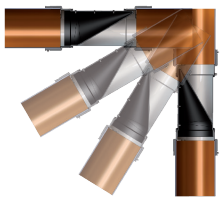

INLINE INSTALLATION

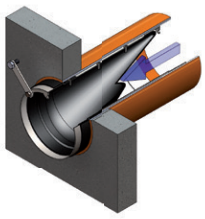

CHAMBER INSTALLATION

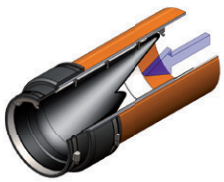

OUTLET INSTALLATION

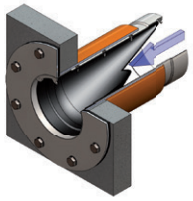

FLANGE INSTALLATION

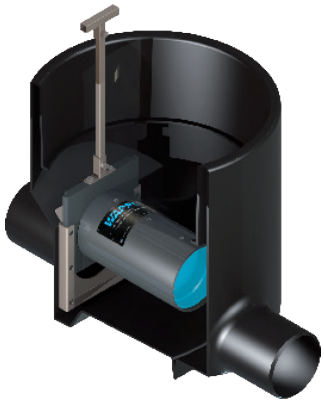

WASTOP® PRE-INSTALLED IN AN ACCESS CHAMBER

The WaStop Access Chamber provides you with peace of mind. Once installed the WaStop Access chamber provides complete protection against backflow in the sewer or combined sewer network. One ingenious product protects your basement or property from flooding caused by an overload or surcharge in the sewer system.

- Easy access from ground level
- Easy to inspect - simply lift manhole cover and pull up the WaStop module
- Delivered complete - inspection chamber and check valve in one

LOW HEAD LOSS IS ESSENTIAL

Comparing head loss data is difficult as the test procedure is rarely presented and there are multiple ways of altering data. However, the test results shown below were conducted in the same facility with the same reference points and are therefore comparable. The test result shows that the **WaStop has 65% lower head loss** than a competing inline check valve at flow 150l/s. Both valves were tested in the same open air scenario.

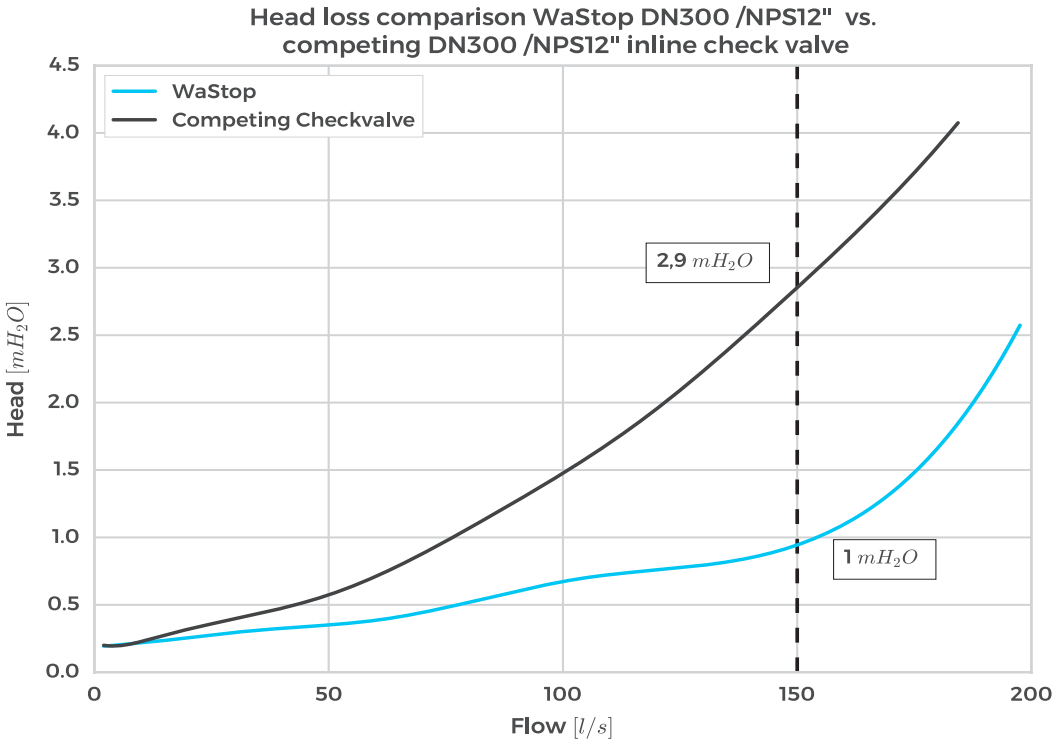

THE WIDEST RANGE OF SIZES TO SUIT ALL PIPES

We at Wapro know that there is a wide range of pipes available on the market, and that these pipes aren't always perfect. To ensure the valve we provide you with fits perfectly and protects 100% we've engineered the guess work out of it.

Keeping in line with our customer promise of commons sense and simplicity, we have developed a standard range of WaStop from DN75-2000mm. On top of this we have a Superior Fit Seal to ensure there is no leakage between the existing pipe and the WaStop inline check valve. We designed this seal to not only create the perfect fit, but also to ensure quick easy installation. Time is money.

All sizes are available in short versions or with flanges and can be customized to suit your needs. All WaStop standard valves are reversible for inlet or outlet installation and are able to be used vertically as well as horizontally.

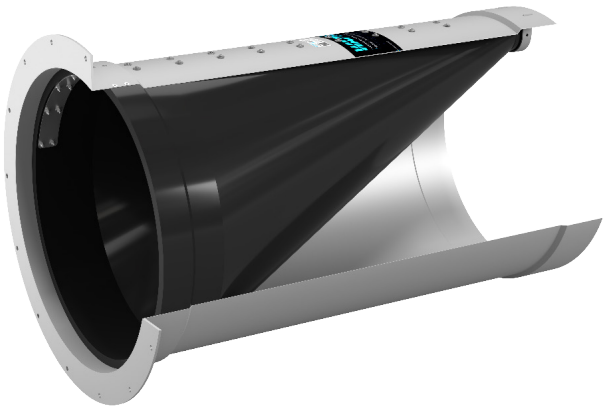

WASTOP® STANDARD RANGE DIMENSIONS

Long life-cycle is part of our DNA. It's part of our values. With this in mind we use the right materials for the right application. Stainless steel AISI 304 (EN1.4301) and AISI 316L (EN1.4404), and PVC/PE, along with a membrane material suited to the application.

WASTOP® STANDARD - 304/316 STAINLESS STEEL

Model*	DN	Length	Length (Short)**	OD seal	OD body	OD waist (OD Short)	Opening pressure Standard***	Closing pressure Standard	Installation pipe*		Weight
	[mm]	[mm]	[mm]	[mm]	[mm]	[mm]	[mmH²O]	[mmH²O]	Min	Max	[kgs]
WS97	100	210	160	102	97	93	180	70	99	101	0,7
WS101	110	215	165	105	100	96	190	60	101	104	0,8
WS116	125	230	160	120	115	111	250	90	117	120	0,9
WS146	150	300	200	160,5	144,5	138,5	230	80	146	159	2,4
WS183	200	385	270	201	181	173	260	120	182	200	4
WS193	200	395	275	211	191	183	210	110	193	210	5
WS215	225	450	300	235	215	207	220	130	216	233	5,5
WS230	250	480	320	250	230	222	200	120	232	248	6
WS240	250	520	350	260	240	232	190	110	242	258	7
WS265	300	550	365	285	265	256	180	120	267	283	10
WS290	300	600	400	310	290	280	220	160	293	307	10
WS340	350	700	500	352	340	328	360	220	343	349	18
WS370	400	730	500	394	370	358	240	160	373	391	20
WS390	400	750	500	414	390	378	310	190	393	411	24
WS440	450	840	560	467	443	431	210	140	446	464	28
WS490	500	900	600	506	490	474	270	180	493	503	29
WS515	515	1000	650	539	515	499	265	165	518	536	38
WS590	600	1200	800	603	587	567	370	240	590	598	48
WS690	700	1300	870	710	690	670	280	180	695	705	63
WS750	750	1400	950	770	750	726	390	240	755	765	75
WS790	800	1500	1000	810	790	766	350	230	795	805	88
WS885	900	1700	-	915	885	855	400	270	890	910	116
WS985	1000	1800	-	1015	985	955	390	260	990	1010	141
WS1040	1050	2000	-	-	1040	-	350	220	1048	-	221
WS1185	1200	2250	-	-	1185	1155	460	290	1190	-	290
WS1385	1400	2600	-	-	1385	1349	540	350	1390	-	440
WS1485	1500	2800	-	-	1485	1441	620	390	1490	-	642
WS1585	1600	3000	-	-	1585	1541	600	380	1590	-	700

*We have a standard set of sizes which can be customized, easily, to suit any application. Flanges on inlet, outlet or somewhere in between are all easily available. Quickly. **Customized extra short valves are available. *** Open air. Standard membrane. Lower and higher opening pressures available.

WASTOP® STANDARD - PVC/PE

Model	DN	Length	OD body	Opening Pressure Standard	Closing Pressure Standard	Weight
	[mm]	[mm]	[mm]	[mmH²O]	[mmH²O]	[kgs]
WS75PVC	75	125	75	190	70	0,3
WS110PVC	110	210	110	200	60	0,9
WS125PVC	125	240	125	190	80	1,2
WS160PVC	160	310	160	220	80	2,1
WS200PVC	200	400	200	190	110	4,1
WS250PE	250	480	250	220	130	6,3
WS250PE-I	250	480	236	220	140	4,6
WS315PE	315	600	315	220	160	12,5
WS315PE-I	315	600	295	230	170	8,3

WASTOP® STANDARD - STAINLESS

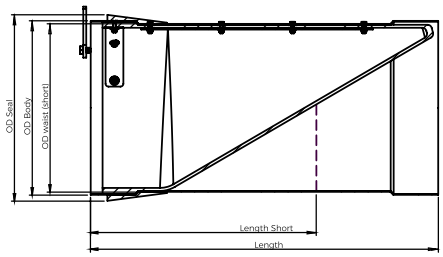

WASTOP® STANDARD - PVC/PE

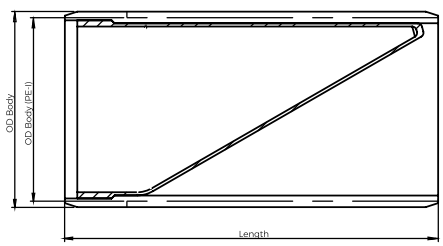

WAPRO

www.wapro.com

EJCDC Exhibit No. 1
Contractor's Bid Schedule/Schedule of Unit Pricing
Consisting of 2 pages

*See notes on Page 3 of EJCDC Agreement, Article 5, Subsection 5.01(B)

(ATTACHMENT 1) SCHEDULE OF UNIT PRICING
CITY OF PORT ORANGE
ITB #25-13
439865-3-54-01 SJR2C Loop Trail (Spruce Creek Rd.) form South of Selin Circle to Herbert Street
Completed (Attachment 1) Schedule of Unit Pricing MUST be included with Bid Submission

Bidders are required to complete all fields shaded in green.

(ATTACHMENT 1) SCHEDULE OF UNIT PRICING MUST BE SIGNED

NAME OF BUSINESS:	Masci General Contractor, Inc.
CONTACT PERSON:	Leticia M. Ferreira, Vice President
EMAIL ADDRESS:	leticiamasci@mascigc.com
AUTHORIZED SIGNATURE:	

ALL UNIT PRICING IN ACCORDANCE WITH SPECIFICATIONS - AWARD WILL BE MADE BASED ON GRAND TOTAL PRICING FOR ALL ITEMS

BID ITEMS - PER SECTION 3 - SCOPE OF WORK

ITEM #	ITEM DESCRIPTION	QTY	UNIT of MEASURE	UNIT PRICE	EXTENDED PRICE
0101 1	MOBILIZATION	1	LS	$ 143,258.00	$ 143,258.00 -
0102 1	MAINTENANCE OF TRAFFIC	1	LS	$ 25,000.00	$ 25,000.00 -
0104 10 3	SEDIMENT BARRIER	5,168	LF	$ 1.75 -	$ 9,044.00 -
0104 11	FLOATING TURBIDITY BARRIER	200	LF	$ 12.50 -	$ 2,500.00 -
0104 18	INLET PROTECTION SYSTEM	3	EA	$ 200.00 -	$ 600.00 -
0110 1 1	CLEARING & GRUBBING	0.689	AC	$ 50,000.00	$ 34,450.00 -
0110 2 2	SELECTIVE CLEARING AND GRUBBING, AREAS WITH TREES TO REMAIN	0.529	AC	$ 75,000.00	$ 39,675.00 -
0110 23	TREE REMOVAL	5	EA	$ 1,540.00-	$ 7,700.00 -
0110 4 10	REMOVAL OF EXISTING CONCRETE	189	SY	$ 37.50 -	$ 7,087.50 -
0120 1	REGULAR EXCAVATION	68.0	CY	$ 35.27 -	$ 2,398.36 -
0120 6	EMBANKMENT	215.0	CY	$ 39.45 -	$ 8,481.75 -
0160 4	TYPE B STABILIZATION	1,038	SY	$ 8.50 -	$ 8,823.00 -
285701-A	DENSE GRADED AGGREGATE BASE (98% MOD PROCTOR DENSITY) 3" THICK	1,038	SY	$ 27.50 -	$ 28,545.00 -
0334 1 12	SUPERPAVE ASPHALTIC CONC, TRAFFIC B	342.5	TN	$ 139.57 -	$ 47,802.73 -
0400 0 11	CONCRETE CLASS NS, GRAVITY WALL INDEX 400-011	83.3	CY	$ 1,532.00	$ 127,615.60-
0425 1521	INLETS, DT BOT, TYPE C,<10'	3	EA	$ 8,240.00-	$ 24,720.00 -
0425 5	MANHOLE, ADJUST	1	EA	$ 1,050.00	$ 1,050.00 -
0430174118	PIPE CULVERT, OPTIONAL MATERIAL, ROUND, 18"SD	131	LF	$ 139.77 -	$ 18,309.87 -
0430174124	PIPE CULVERT, OPTIONAL MATERIAL, ROUND, 24"SD	29	LF	$ 165.58 -	$ 4,801.82 -
0430982125	MITERED END SECTION, OPTIONAL ROUND, 18" CD	3	EA	$ 3,700.00	$ 11,100.00 -
0430982129	MITERED END SECTION, OPTIONAL ROUND, 24" CD	1	EA	$ 4,000.00-	$ 4,000.00 -
0430984125	MITERED END SECTION, OPTIONAL ROUND, 18" SD	1	EA	$ 3,700.00-	$ 3,700.00 -
0515 1 2	PIPE HANDRAIL - GUIDERAIL, ALUMINUM	308	LF	$ 71.00 -	$ 21,868.00 -
0520 1 10	CONCRETE CURB & GUTTER, TYPE F	180	LF	$ 53.40 -	$ 9,612.00 -
0522 1	CONCRETE SIDEWALK AND DRIVEWAYS, 4" THICK	485	SY	$ 89.50 -	$ 43,407.50 -
0522 2	CONCRETE SIDEWALK AND DRIVEWAYS, 6" THICK	284	SY	$ 110.47 -	$ 31,373.48 -
0527 2	DETECTABLE WARNINGS	287	SF	$ 28.00 -	$ 8,036.00 -
0570 1 2	PERFORMANCE TURF, SOD	2,558	SY	$ 5.10 -	$ 13,045.80 -
0630 2 11	CONDUIT, FURNISH & INSTALL, OPEN TRENCH	364	LF	$ 27.73 -	$ 10,093.36-
0630 2 12	CONDUIT, FURNISH & INSTALL, DIRECTIONAL BORE	120	LF	$ 33.41 -	$ 4,009.20 -
0630 2 14	CONDUIT, FURNISH & INSTALL, ABOVEGROUND	90	LF	$ 18.86 -	$ 1,697.67 -
0630 2 15	CONDUIT, FURNISH & INSTALL, BRIDGE MOUNT	697	LF	$ 20.64 -	$ 14,388.87-
0632 7 2	SIGNAL CABLE- REPAIR/REPLACE/OTHER, FURNISH & INSTALL	50	LF	$ 9.02 -	$ 451.10 -
0633 6	FIBER OPTIC CABLE LOCATOR	1	DA	$ 532.35-	$ 532.35 -
0635 2 11	PULL & SPLICE BOX, F&I, 13" x 24" COVER SIZE	15	EA	$ 3,202.50	$ 48,037.47-
0635 3 11	JUNCTION BOX, FURNISH & INSTALL, AERIAL	12	EA	$ 1914.60	$ 22,975.21
0639 1112	ELECTRICAL POWER SERVICE, F&I, OVERHEAD METER PURCHASED BY CONTRACTOR FROM POWER COMPANY	4	AS	$ 4,021.36-	$ 16,085.42 -

ITEM #	ITEM DESCRIPTION	QTY	UNIT of MEASURE	UNIT PRICE	EXTENDED PRICE
0639 2 1	ELECTRICAL SERVICE WIRE, FURNISH & INSTALL	360	LF	$8.37 -	$3,013.92 -
0639 3 11	ELECTRICAL SERVICE DISCONNECT, F&I, POLE MOUNT	1	EA	$4,292.60	$4,292.60 -
0641 2 12	PRESTRESSED CONCRETE POLE, F&I, TYPE P-II SERVICE POLE	4	EA	$4,484.75	$17,939.01
0646 1 11	ALUMINUM SIGNALS POLE, PEDESTAL	2	EA	$4,487.76	$8,975.51 -
0646 1 12	ALUMINUM SIGNALS POLE, FURNISH & INSTALL PEDESTRIAN DETECTOR POST	6	EA	$3,727.93	$22,367.59-
0653 1 11	PEDESTRIAN SIGNAL, FURNISH & INSTALL LED COUNTDOWN, 1 WAY	2	AS	$993.23	$1,986.45 -
0653 1 60	PEDESTRIAN SIGNAL, REMOVE PED SIGNAL- POLE/PEDESTAL TO REMAIN	2	AS	$354.90-	$709.80 -
0654 2 12	MIDBLOCK CROSSWALK: RECTANGULAR RAPID FLASHING BEACON, FURNISH & INSTALL-AC, COMPLETE SIGN ASSEMBLY- BACK TO BACK	6	AS	$15,733.90	$94,403.40
0665 1 11	PEDESTRIAN DETECTOR, FURNISH & INSTALL, STANDARD	2	EA	$785.51	$1,571.02 -
0665 1 60	PEDESTRIAN DETECTOR, REMOVE- POLE/PEDESTAL TO REMAIN	2	EA	$177.45-	$354.90 -
0700 1111	SINGLE COLUMN GROUND SIGN ASSEMBLY, F&I GROUND MOUNT, LESS THAN 12 SF	20	EA	$996.45	$19,929.00
0700 1600	SINGLE COLUMN GROUND SIGN ASSEMBLY, REMOVE	3	EA	$354.90	$1,064.70 -
0711 11123	THERMOPLASTIC, STANDARD, WHITE, SOLID, 12" FOR CROSSWALK AND ROUNDABOUT	442	LF	$18.00 -	$7,956.00 -
0711 11125	THERMOPLASTIC, STANDARD, WHITE, SOLID, 24" FOR STOP LINE AND CROSSWALK	470	LF	$21.00 -	$9,870.00 -
0711 11160	THERMOPLASTIC, STANDARD, WHITE, MESSAGE OR SYMBOL	2	EA	$595.00-	$1,190.00 -
0711 16101	THERMOPLASTIC, STANDARD-OTHER SURFACES, WHITE, SOLID, 6"	0.003	GM	$275,000.00	$825.00 -
0711 17 1	THERMOPLASTIC, REMOVE EXISTING THERMOPLASTIC PAVEMENT MARKINGS- SURFACE TO REMAIN	317	SF	$10.00 -	$3,170.00 -
0715 1 12	LIGHTING CONDUCTORS, F&I, INSULATED, NO.8 - 6	3,247	LF	$3.03 -	$9,835.16 -
0715 516-513	LIGHT POLE COMPLETE-SPECIAL DESIGN, F&I, POLE TOP MOUNT, WOOD, 13'	11	EA	$8,872.66	$97,599.22
0715 516-518	LIGHT POLE COMPLETE-SPECIAL DESIGN, F&I, POLE TOP MOUNT, WOOD, 18'	1	EA	$9,324.71	$9,324.71 -
0751 49	TIMBER PEDESTRIAN BRIDGE	5,472	SF	$87.00 -	$476,064.00
				SUB-TOTAL BID ITEMS:	$1,598,718.05

ITEMS TO BE LOCALLY FUNDED					
ITEM #	ITEM DESCRIPTION	QTY	UNIT of MEASURE	UNIT PRICE	EXTENDED PRICE
0522 2A	CONCRETE SHARED USE PATH, 7" THICK (HEAVY DUTY) (IN LIEU OF 4" THICK)	47	SY	$159.75	$7,508.25 -
CITY-01	18" WAPRO STAINLESS WASTOP INLINE CHECK VALVE	1	EA	$27,635.54	$27,635.54 -
				SUB-TOTAL LOCALLY FUNDED ITEMS:	$35,143.79-
				GRAND TOTAL ALL ITEMS:	$1,633,861.84

EJCDC Exhibit No. 2 Contractor's Proposal

Not attached, on file with City of Port Orange Purchasing Department

Consisting of 66 pages

SECTION 7 – REQUIRED FORMS

FORM 7.1 – BID SUBMITTAL CHECKLIST

✓ Form 7.2 – Bidder's Acknowledgement Form

✓ Form 7.3 – Addendum and Change Order Procedure Acknowledgement

✓ Form 7.4 – Drug Free Preference Statement

✓ Form 7.5 – Public Entity Crimes Statement

✓ Form 7.6 – Statement of Bidder's Qualifications

✓ Form 7.7 – Professional References for Previous Experience

✓ Form 7.8 – List of Subcontractors

✓ Form 7.9 – Scrutinized Companies Certification

✓ Form 7.10 – E-Verify Affidavit

✓ Form 7.11 – Affidavit of Compliance with Section 287.138, Florida Statutes

✓ Form 7.12 – No Submittal Response Form

✓ (Attachment 1) – Schedule of Unit Pricing

✓ Affidavit Regarding Labor and Services

✓ Current Bonding Capacity Letter (as outlined in Section 6)

✓ Copy of all currently held Licenses (Contractor, Sunbiz, etc.)

✓ Original Bid Bond

✓ Submission of one (1) original marked "ORIGINAL" and one (1) digital (flash drive) version in PDF format

BY: Masci General Contractor, Inc.
Name of Business

Authorized Signature Leticia M. Ferreira, Vice President

7/2/25
Date

This document must be completed and returned with your Submittal

FORM 7.2 – BIDDER'S ACKNOWLEDGEMENT FORM

I have carefully examined the Invitation to Bid (ITB), Instructions to Bidders, General and/or Special Conditions, Specifications and any other documents accompanying or made a part of this invitation.

I hereby propose to furnish the goods or services specified in the ITB at the prices or rates as finally negotiated. I agree that my bid will remain firm for a period of up to one-hundred-twenty (120) days in order to allow the City of Port Orange adequate time to evaluate the proposed bid. Furthermore, I agree to abide by all conditions of the ITB.

I certify that all information contained in the bid is truthful to the best of my knowledge and belief. I further certify that I am duly authorized to submit this bid on behalf of the Bidder/Contractor as its act and deed and that the Bidder/Contractor is ready, willing and able to perform if awarded the contract.

I further certify that this bid is made without prior understanding, contract, connection, discussion or collusion with any person, firm or corporation submitting a bid for the same product or service; no officer, employee or agent of the City of Port orange City Council or of any other Bidder interested in said ITB; and that the undersigned executed this Bidder's Acknowledgement with full knowledge and understanding of the matters therein contained and was duly authorized to do so.

I further certify that having read and examined the specifications and documents for the designated services and understanding the general conditions for the contract under which services will be performed, does hereby propose to furnish all labor, equipment and material to provide the services set forth in the ITB.

I hereby declare that the following listing states any clarifications, any and all variations from and exceptions to the requirements of the specifications and documents. The undersigned further declares that the "work" will be performed in strict accordance with such requirements and understands that any exceptions to the requirements of the specifications and documents may render the bid non-responsive.

NO EXCEPTIONS ALLOWED AFTER THE BID IS SUBMITTED:

Please check one: ☑I take NO exceptions. ☐Exceptions (list below; add additional pages if necessary):

_____

_____

Masci General Contractor, Inc.	5752 S. Ridgewood Avenue
Name of Business	Mailing Address
[signature]	Port Orange, FL 32127
Authorized Signature	City, State & Zip Code
Leticia Masci Ferreira, Vice President	(386) 322-4500
Printed Name and Title	Telephone Number
20-2045800	leticiamasci@mascigc.com
Federal Identification No.	E-mail Address

STATE OF: Florida COUNTY OF: Volusia

The foregoing instrument was acknowledged before me by means of ☑physical presence or ☐online notarization, this

2nd day of July, 2025, by Leticia Masci Ferreira and who:

☑Is personally known to me; or ☐ has produced _____ as identification.

[signature] Notary Public, State of Florida

Printed, typed or stamped name, commission and expiration:

NOTARY PUBLIC STATE OF FLORIDA
HEATHER A. KNIGHT
Commission # HH 614855
Expires November 20, 2028

This document must be completed and returned with your Submittal

FORM 7.3 – ADDENDUM AND CHANGE ORDER PROCEDURE ACKNOWLEDGEMENT

ADDENDUM ACKNOWLEDGEMENT

I have carefully examined the Invitation to Bid (ITB), Instructions to Bidders, General and/or Special Conditions, Specification and any other documents accompanying or made a part of this ITB.

I acknowledge receipt and incorporation of the following addenda and the cost, if any, of such revisions has been included in the price of the bid proposal.

Addendum# 1	Date: 6/2/25	Addendum#_____	Date:_____
Addendum# 2	Date: 6/20/25	Addendum#_____	Date:_____

CHANGE ORDER PROCEDURE ACKNOWLEDGEMENT

If awarded the Contract for this Solicitation, I acknowledge that no oral statement of any person shall modify or otherwise change or affect the terms, conditions or specifications stated in the resulting contract. All change order requests shall be made in writing by the Contractor for review by the Contract Administrator for the City of Port Orange. No work shall be performed as set forth in the change order until the Contractor receives an executed Purchase Order for the requested change.

I acknowledge the above statements regarding Addendum Acknowledgement and Change Order Procedures:

Masci General Contractor, Inc.
Name of Business

Authorized Signature

Leticia Masci Ferreira, Vice President
Printed Name and Title

STATE OF: Florida COUNTY OF: Volusia

The foregoing instrument was acknowledged before me by means of ☑physical presence or ☐online notarization, this

2nd day of July, 2025, by Leticia Masci Ferreira and who:

☑Is personally known to me; or ☐ has produced _____ as identification.

Notary Public, State of Florida
Printed, typed or stamped name, commission and expiration:

HEATHER A. KNIGHT
Commission # HH 614855
Expires November 20, 2028

This document must be completed and returned with your Submittal

FORM 7.4 – DRUG-FREE PREFERENCE STATEMENT

IDENTICAL TIE BIDS – Preference shall be given to businesses with drug-free workplace programs. Whenever two or more bids, proposals, statements or replies are equal with respect to price, quality and service are received by the City for procurement of commodities or contractual services, a bid received from a business that certifies that it has implemented a drug-free workplace program shall be given preference in the award process. Established procedures for processing tie bids will be followed if none of the tied bidders have a drug-free workplace program.

In order to have a drug-free workplace program, a business shall:

1. Publish a statement notifying employees that the unlawful manufacture, distribution, dispensing, possession or use of a controlled substance is prohibited in the workplace and specifying the actions that will be taken against employees for violations of such prohibition.

2. Inform employees about the dangers of drug abuse in the workplace, the business's policy of maintaining a drug-free workplace, any available drug counseling, rehabilitation and employee assistance programs and the penalties that may be imposed upon employees for drug abuse violations.

3. Give each employee engaged in providing the commodities or contractual services that are under a bid a copy of the statement specified in subsection (1).

4. In the statement specified in subsection (1), notify the employees that, as a condition of working on the commodities or contractual services that are under the bid, the employee will abide by the terms of the statement and will notify the employer of any conviction of, or plea of guilty or nolo contendere to, any violation of chapter 893 or of any controlled substance the law of the United States or any state, for a violation occurring in the workplace no later than five (5) days after such conviction.

5. Impose a sanction on or require the satisfactory participation in a drug abuse assistance or rehabilitation program if such is available in the employee's community, by an employee who is so convicted.

6. Make a good faith effort to continue to maintain a drug-free workplace through implementation of Section 287.087, Florida Statutes.

As an authorized representative of the firm, I certify that this firm complies fully with the above requirements.

Masci General Contractor, Inc.
Name of Business

Authorized Signature

Leticia M. Ferreira, Vice President
Printed Name and Title

STATE OF: Florida COUNTY OF: Volusia

The foregoing instrument was acknowledged before me by means of ☑physical presence or ☐online notarization, this 2nd day of July, 2025, by Leticia M. Ferreira and who:

☑Is personally known to me; or ☐ has produced _____ as identification.

Notary Public, State of FL
Printed, typed or stamped name, commission and expiration:

HEATHER A. KNIGHT
Commission # HH 614855
Expires November 20, 2028

This document must be completed and returned with your Submittal

FORM 7.5 – SWORN STATEMENT ON PUBLIC ENTITY CRIMES
UNDER SECTION 287.133(3)(A), FLORIDA STATUTES
(To be signed in the presence of a notary public or other authorized to administer oaths.)

Before me, the undersigned Authority, personally appeared affiant Leticia M. Ferreira, who, being by me first duly sworn, made the following statement:

1. The business address of Masci General Contractor, Inc. (name of Offeror or business) is 5752 S. Ridgewood Avenue, Port Orange, FL 32127.
2. My relationship to Masci General Contractor, Inc. (name of Offeror or business) is Vice President (relationship such as sole proprietor, partner, president, vice president.)
3. I understand that a public entity crime as defined in Section 287.133 of the Florida Statutes includes a violation of any state or federal law by a person with respect to and directly related to the transaction of business with any public entity in Florida or with an agency or political subdivision of any other state or with the United States, including, but not limited to, any proposal or contract for goods or services to be provided to any public entity or such and agency or political subdivision and involving antitrust, fraud, theft, bribery, collusion, racketeering, conspiracy or material misrepresentation.
4. I understand that "convicted" or "conviction" is defined by the Florida Statutes to mean a finding of guilt or a conviction of a public entity crime, with or without an adjudication of guilt, in any federal or state trial court of record relating to charges brought by indictment or information after July 1, 1989, as a result of a jury verdict, non-jury trial, or entry of a plea of guilt or nolo contendere.
5. I understand that "affiliate" is defined by the Florida Statutes to mean (1) a predecessor or successor of a person or a corporation convicted of a public entity crime, or (2) an entity under the control of any natural person who is active in the management of the entity and who has been convicted of a public entity crime, or (3) those officers, directors, executives, partners, shareholders, employees, members, and agents who are active in the management of an affiliate, or (4) a person or corporation who knowingly entered into a joint venture with a person who has been convicted of a public entity crime in Florida during the preceding 36 months.
6. Neither the Offeror or contractor, nor any officer, director, executive, partner, shareholder, employee, member or agent who is active in the management of the Offeror or contractor, nor any affiliate of the Offeror or contractor has been convicted of a public entity crime subsequent to July 1, 1989. **(Draw a line through paragraph 6 if paragraph 7 below applies.)**
7. There has been a conviction of a public entity crime by the Offeror or contractor, or an officer, director, executive, partner, shareholder, employee, member or agent of the Offeror or contractor who is active in the management of the Offeror or contractor or an affiliate of the Offeror or contractor. A determination has been made pursuant to Section 287.133(3) by order of the Division of Administrative Hearings that it is not in the public interest for the name of the convicted person or affiliate to appear on the convicted bidder list. The name of the convicted person or affiliate is: _____. A copy of the order of the Division Administrative Hearing is attached. **(Draw a line through paragraph 7 if paragraph 6 above applies)**

Masci General Contractor, Inc.
Name of Business

Authorized Signature

STATE OF: Florida

COUNTY OF: Volusia

Leticia M. Ferreira, Vice President
Printed Name and Title

The foregoing instrument was acknowledged before me by means of ☑physical presence or ☐online notarization, this 2nd day of July, 2025, by Leticia M. Ferreira and who:

☑Is personally known to me; or ☐ has produced _____ as identification.

_____Notary Public, State of _____
Printed, typed or stamped name, commission and expiration:

HEATHER A. KNIGHT
Commission # HH 614855
Expires November 20, 2028

This document must be completed and returned with your Submittal

FORM 7.6 – STATEMENT OF BIDDER'S QUALIFICATIONS

The undersigned warrants that he or she is duly authorized to complete this document, and hereby affirms that the information contained in Form 7.6 is complete, true and correct to the best of his or her knowledge and belief. If necessary, question may be answered on separate paper and attached with any additional information that may be pertinent.

A. Name of Bidder: Masci General Contractor, Inc.

B. Permanent main office address: 5752 S. Ridgewood Avenue, Port Orange, FL 32127

C. Date organized: 12/17/2004

D. If a corporation, where incorporated: Florida

E. How many years have you been engaged in the business under your present firm or trade name? 21

F. Contracts on hand: (List these, showing amount of each contract and the appropriate anticipated dates of completion.) **USE SEPARATE SHEET & ATTACH TO SUBMITTAL**

G. General character of work performed by your company: Aspalt manufacturer,Paving, Sitework, Underground Utilities, Concrete, etc.

H. Have you ever failed to complete any work awarded to you? If so, where and why? no

I. Have you ever defaulted on a contract? If so, where and why? no

J. List your major equipment currently owned or leased: **USE SEPARATE SHEET & ATTACH TO SUBMITTAL**

K. Background and experience of the principal members of your organization, including the officers: USE **SEPARATE SHEET & ATTACH TO SUBMITTAL**

L. Credit currently available: $ 7,000,000

M. Give bank name, contact name and phone number: 1st Source Bank, Renee Lincoln, (904) 481-6524

N. Will you, upon request, fill out a detailed financial statement and furnish any other information that may be required by the Owner? ☑Yes ☐No

The undersigned hereby authorizes and requests any person, firm or corporation to furnish any information requested by the Owner in verification of the recitals compromising the Statement of Bidder's Qualifications.

Masci General Contractor, Inc.
Name of Business

Authorized Signature

Leticia M. Ferreira, Vice President
Printed Name and Title

STATE OF: Florida

COUNTY OF: Volusia

The foregoing instrument was acknowledged before me by means of ☑physical presence or ☐online notarization, this 2nd day of July, 2025, by Leticia M. Ferreira and who:

☑Is personally known to me; or ☐ has produced _____ as identification.

_____ Notary Public, State of _____

Printed, typed or stamped name, commission and expiration:

HEATHER A. KNIGHT
Commission # HH 614855
Expires November 20, 2028

This document must be completed and returned with your Submittal

FORM 7.7 – PROFESSIONAL REFERENCES FOR PREVIOUS EXPERIENCE

The Bidder proposes that they are qualified to perform the referenced work and has successfully done so on recent projects similar in nature and size. The City reserves the right to check references and confirm information provided herein. **Please provide three (3) current and correct references from clients for similar services. (DO NOT include the City of Port Orange)**

1. Company Name: Flagler County
   Contact Person: Amy Stroger
   City, State: Palm Coast, Florida
   Telephone Number: (386) 313-4047
   Email Address: astroger@flaglercounty.gov
   Description of goods/services provided: milling, paving, trail, bridge, grading, drainage, concrete, lighting, striping, etc.
   Contract Amount: $9,478,640.33
   Start/End Date of Contract: 2022-2023
2. Company Name: WSB Engineering
   Contact Person: Chris Nolen
   City, State: Orlando, Florida
   Telephone Number: (863) 651.9105
   Email Address: cnolen@wsbeng.com
   Description of goods/services provided: milling, paving, grading, drainage, concrete, signals, striping, etc.
   Contract Amount: $5,312,936.32
   Start/End Date of Contract: 2022-2023
3. Company Name: RKK
   Contact Person: Chas Starr
   City, State: Orlando, Florida
   Telephone Number: (407) 923-4908
   Email Address: cstarr@rkk.com
   Description of goods/services provided:
   Contract Amount: $16,029,260.78
   Start/End Date of Contract: 2022-2024

This document must be completed and returned with your Submittal.

FORM 7.7 – PROFESSIONAL REFERENCES FOR PREVIOUS EXPERIENCE (page 2)

LISTING OF PREVIOUS EXPERIENCE
COMMERCIAL CLIENT LIST

The Bidder proposes that they are qualified to perform the referenced work and has successfully done so on recent projects similar in nature and size. A minimum of three (3) projects must be listed below. The Owner reserves the right to check references and confirm information provided herein.

List clients to whom you currently provide or have in the past provided equal or similar services to those required under the City's contract as outlined in this bid package. A minimum of three (3) projects shall be listed below in order to bid on this contract. The Owner reserves the right to check references and confirm information provided herein.

1. Contact Name: Doug Schumann
   Phone: (407) 496-9627
   Current Client: ☑Yes ☐ No
   Number of years of service provided: +5 years
   Description of service: Roadwork including miling, paving, concrete and other incidentals

2. Contact Name: Brad D. Bauknecht
   Phone: (386) 872-7794
   Current Client: ☑Yes ☐ No
   Number of years of service provided: +10 years
   Description of service: Roadwork including miling, paving, concrete and other incidentals

3. Contact Name: Anurag (Anu) Shah, P.E.
   Phone: office (321) 274-9892 & cell (850) 341-6114
   Current Client: ☑Yes ☐ No
   Number of years of service provided: 5 years
   Description of service: Roadwork including miling, paving, concrete and other incidentals

This document must be completed and returned with your Submittal.

FORM 7.8 – LISTING OF SUBCONTRACTORS

The Bidder proposes that the following subcontractors are qualified to perform the referenced work and have successfully done so on recent projects similar in nature and size. All subcontractors whose work product accounts for 5% or more of the total contract value shall be listed. Upon approval of subcontractors listed, the successful **Bidder shall not substitute subcontractors without approval from the City Representative.** Bidder shall attach additional sheets as necessary.

Subcontractor No. 1

Name: Chinchor Electric, Inc.

Description of Work: Electrical / Lighting

Percent of Contract Price: 21%

Previous Experience Together: ☑Yes ☒No

Subcontractor No. 2

Name: Nautre Bridges

Description of Work: Boardwalk

Percent of Contract Price: 25%

Previous Experience Together: ☑Yes ☐No

Subcontractor No. 3

Name: _____

Description of Work: _____

Percent of Contract Price: _____

Previous Experience Together: ☐Yes ☐No

Subcontractor No. 4

Name: _____

Description of Work: _____

Percent of Contract Price: _____

Previous Experience Together: ☐Yes ☐No

Subcontractor No. 5

Name: _____

Description of Work: _____

Percent of Contract Price: _____

Previous Experience Together: ☐Yes ☐No

This document must be completed and returned with your submittal

FORM 7.9 SCRUTINIZED COMPANIES CERTIFICATION

(To be signed in the presence of a notary public or other officer authorized to administer oaths.)

SCRUTINIZED COMPANIES CERTIFICATION PURSUANT TO SECTION 287.135, FLORIDA STATUTES

I, Leticia M. Ferreira, Vice President, on behalf
(Print Name and Title)

of Masci General Contractor, Inc. ("Company"), certify that Masci General Contractor, Inc.
(Company Name) (Company Name)

does not:
1. Participate in a boycott of Israel; and
2. Is not on the Scrutinized Companies with Boycott Israel List; and
3. Is not on the Scrutinized Companies with Activities in Sudan List; and
4. Is not on the Scrutinized Companies with Activities in the Iran Petroleum Energy Sector List; and
5. Has not engaged in business operations in Syria.

Submitting a false certification shall be deemed a material breach of contract. The City of Port Orange shall provide notice, in writing, to the Company of the City's determination concerning the false certification. The Company shall have ninety (90) days following receipt of the notice to respond in writing and demonstrate that the determination of false certification was made in error. If the Company does not demonstrate that the City's determination of false certification was made in error, then the City shall have the right to terminate the contract and seek civil remedies pursuant to Florida Statute § 287.135.

Section 287.135, Florida Statutes prohibits the City from: 1) Contracting with companies for goods or services in any amount if at the time of bidding on, submitting a proposal for, or entering into or renewing a contract if the company is on the Scrutinized Companies that Boycott Israel List, created pursuant to Section 215.4725, F.S. or is engaged in a boycott of Israel; and 2) Contracting with companies for goods or services over $1,000,000.00 that are on either the Scrutinized Companies with activities in the Iran Petroleum Energy Sector List, created pursuant to s. 215.473, or are engaged in business operations in Syria.

As the person authorized to sign on behalf of the Company, I hereby certify that the company identified above in the section entitled "Company Name" does not participate in any boycott of Israel, is not listed on the Scrutinized Companies that Boycott Israel List, is not listed on either the Scrutinized Companies with activities in the Iran Petroleum Energy Sector List and is not engaged in business operations in Syria. I understand that pursuant to Section 287.135, Florida Statutes, the submission of a false certification may subject the company to civil penalties, attorney's fees, and/or costs. I further understand that any contract with the City for goods or services may be terminated at the option of the City if the company is found to have submitted a false certification or has been placed on the Scrutinized Companies with Activities in Sudan List or the Scrutinized Companies with Activities in the Iran Petroleum Energy Sector List.

Masci General Contractor, Inc. _____
COMPANY NAME

_____
SIGNATURE

Leticia M. Ferreira
PRINT NAME

Vice President
TITLE

STATE OF FLORIDA

COUNTY OF: Volusia

The foregoing instrument was acknowledged before me by means of ☑physical presence or ☐online notarization, this 2nd day of July, 2025, by Leticia M. Ferreira and who:

☑Is personally known to me; or ☐ has produced _____ as identification.

_____ Notary Public, State of Florida
Printed, typed or stamped name, commission and expiration:

HEATHER A. KNIGHT
Commission # HH 614855
Expires November 20, 2028

This document to be completed and returned with your Submittal

FORM 7.10 – E-VERIFY AFFIDAVIT

CITY OF PORT ORANGE

CONTRACTOR E-VERIFY AFFIDAVIT

IN ACCORDANCE WITH SECTION 448.095, FLORIDA STATUTES

Project Name: Masci General Contractor, Inc.

Solicitation Number: ITB 25-13

I, the undersigned hereby certify that Masci General Contractor, Inc. **(insert contractor company name) does not employ, contract with or subcontract with an unauthorized alien, and is otherwise in full compliance with Section 448.095, Florida Statutes.**

I acknowledge that it is my responsibility to ensure full compliance with Section 448.095, Florida Statutes. I am aware enrollment in the E-Verify system for employers can be done at www.e-verify.gov.

A true and correct copy of Masci General Contractor, Inc. **(insert contractor company name) proof of registration in the E-Verify system is attached to this Affidavit.**

By affixing my signature below, I hereby affirm that I am duly authorized to bind the company reference herein and I will comply with all applicable E-Verify requirements.

Leticia M. Ferreira, Vice President
Print or Type Name, Title

Signature of Affiant

20-2045800
Federal Employer ID Number (FEIN)

1454791
E-Verify Number

STATE OF FLORIDA

COUNTY OF: Volusia

The foregoing instrument was acknowledged before me by means of ☑physical presence or ☐online notarization, this 2nd day of July, 2025, by Leticia M. Ferreira and who:

☑Is personally known to me; or ☐ has produced _____ as identification.

Notary Public, State of Florida

Printed, typed or stamped name, commission and expiration:

HEATHER A. KNIGHT
Commission # HH 614855
Expires November 20, 2028

This document to be completed and returned with your Submittal

FORM 7.11 – AFFIDAVIT OF COMPLIANCE WITH SECTION 287.138, FLORIDA STATUTES

AFFIDAVIT OF COMPLIANCE WITH SECTION 287.138, FLORIDA STATUTES CONTRACTING WITH FOREIGN ENTITIES OF CONCERN

The undersigned ("Affiant"), on behalf of the entity listed below ("Entity"), hereby attests under penalty of perjury as follows:

1. Affiant is the Vice President (Title) of Masci General Contractor, Inc. (Business Name) which does business in the State of Florida, hereinafter called the "Entity".
2. Entity is not owned by the government of a foreign country of concern, as defined in Section 287.138 (1) (c), Florida Statutes.
3. The government of a foreign country of concern does not have a controlling interest in Entity, as defined in Section 287.138 (1)(a), Florida Statutes.
4. Entity is not organized under the laws of, and does not have a principal place of business in, a foreign country of concern.
5. Entity is not owned or controlled by the government of a foreign country of concern.
6. For purposes of this affidavit, a foreign country of concern means the People's Republic of China, the Russian Federation, the Islamic Republic of Iran, the Democratic People's Republic of Korea, the Republic of Cuba, the Venezuelan regime of Nicolas Maduro, or the Syrian Arab Republic, including any agency of or any other entity of significant control of such foreign country of concern, as defined in Section 287.138(1)(c), Florida Statutes.

The undersigned is authorized to execute this affidavit on behalf of the Entity.

Date: July 2, 2025 Signed: _____

Entity: Masci General Contractor, Inc. Name: Leticia M. Ferreira

Title: Vice President

STATE OF: Florida COUNTY OF: Volusia

The foregoing instrument was acknowledged before me by means of ☑physical presence or ☐online notarization, this 2nd day of July, 2025, by Leticia M. Ferreira and who:

☑Is personally known to me; or ☐ has produced _____ as identification.

_____

Notary Public, State of Florida at Large:
Printed Name/Seal of Notary, Commission and Expiration Date:

HEATHER A. KNIGHT
Commission # HH 614855
Expires November 20, 2028

(seal)

My commission expires: _____

This document must be completed and returned with your Submittal

(ATTACHMENT 1) SCHEDULE OF UNIT PRICING
CITY OF PORT ORANGE
ITB #25-13
439865-3-54-01 SJR2C Loop Trail (Spruce Creek Rd.) form South of Selin Circle to Herbert Street
Completed (Attachment 1) Schedule of Unit Pricing MUST be included with Bid Submission

Bidders are required to complete all fields shaded in green.

(ATTACHMENT 1) SCHEDULE OF UNIT PRICING MUST BE SIGNED

NAME OF BUSINESS:	Masci General Contractor, Inc.
CONTACT PERSON:	Leticia M. Ferreira, Vice President
EMAIL ADDRESS:	leticiamasci@mascigc.com
AUTHORIZED SIGNATURE:	

ALL UNIT PRICING IN ACCORDANCE WITH SPECIFICATIONS - AWARD WILL BE MADE BASED ON GRAND TOTAL PRICING FOR ALL ITEMS

BID ITEMS - PER SECTION 3 - SCOPE OF WORK

ITEM #	ITEM DESCRIPTION	QTY	UNIT of MEASURE	UNIT PRICE	EXTENDED PRICE
0101 1	MOBILIZATION	1	LS	$ 143,258.00	$ 143,258.00 -
0102 1	MAINTENANCE OF TRAFFIC	1	LS	$ 25,000.00	$ 25,000.00 -
0104 10 3	SEDIMENT BARRIER	5,168	LF	$ 1.75 -	$ 9,044.00 -
0104 11	FLOATING TURBIDITY BARRIER	200	LF	$ 12.50 -	$ 2,500.00 -
0104 18	INLET PROTECTION SYSTEM	3	EA	$ 200.00 -	$ 600.00 -
0110 1 1	CLEARING & GRUBBING	0.689	AC	$ 50,000.00	$ 34,450.00 -
0110 2 2	SELECTIVE CLEARING AND GRUBBING, AREAS WITH TREES TO REMAIN	0.529	AC	$ 75,000.00	$ 39,675.00 -
0110 23	TREE REMOVAL	5	EA	$ 1,540.00-	$ 7,700.00 -
0110 4 10	REMOVAL OF EXISTING CONCRETE	189	SY	$ 37.50 -	$ 7,087.50 -
0120 1	REGULAR EXCAVATION	68.0	CY	$ 35.27 -	$ 2,398.36 -
0120 6	EMBANKMENT	215.0	CY	$ 39.45 -	$ 8,481.75 -
0160 4	TYPE B STABILIZATION	1,038	SY	$ 8.50 -	$ 8,823.00 -
285701-A	DENSE GRADED AGGREGATE BASE (98% MOD PROCTOR DENSITY) 3" THICK	1,038	SY	$ 27.50 -	$ 28,545.00 -
0334 1 12	SUPERPAVE ASPHALTIC CONC, TRAFFIC B	342.5	TN	$ 139.57 -	$ 47,802.73 -
0400 0 11	CONCRETE CLASS NS, GRAVITY WALL INDEX 400-011	83.3	CY	$ 1,532.00	$ 127,615.60-
0425 1521	INLETS, DT BOT, TYPE C,<10'	3	EA	$ 8,240.00-	$ 24,720.00 -
0425 5	MANHOLE, ADJUST	1	EA	$ 1,050.00	$ 1,050.00 -
0430174118	PIPE CULVERT, OPTIONAL MATERIAL, ROUND, 18"SD	131	LF	$ 139.77 -	$ 18,309.87 -
0430174124	PIPE CULVERT, OPTIONAL MATERIAL, ROUND, 24"SD	29	LF	$ 165.58 -	$ 4,801.82 -
0430982125	MITERED END SECTION, OPTIONAL ROUND, 18" CD	3	EA	$ 3,700.00	$ 11,100.00 -
0430982129	MITERED END SECTION, OPTIONAL ROUND, 24" CD	1	EA	$ 4,000.00-	$ 4,000.00 -
0430984125	MITERED END SECTION, OPTIONAL ROUND, 18" SD	1	EA	$ 3,700.00-	$ 3,700.00 -
0515 1 2	PIPE HANDRAIL - GUIDERAIL, ALUMINUM	308	LF	$ 71.00 -	$ 21,868.00 -
0520 1 10	CONCRETE CURB & GUTTER, TYPE F	180	LF	$ 53.40 -	$ 9,612.00 -
0522 1	CONCRETE SIDEWALK AND DRIVEWAYS, 4" THICK	485	SY	$ 89.50 -	$ 43,407.50 -
0522 2	CONCRETE SIDEWALK AND DRIVEWAYS, 6" THICK	284	SY	$ 110.47 -	$ 31,373.48 -
0527 2	DETECTABLE WARNINGS	287	SF	$ 28.00 -	$ 8,036.00 -
0570 1 2	PERFORMANCE TURF, SOD	2,558	SY	$ 5.10 -	$ 13,045.80 -
0630 2 11	CONDUIT, FURNISH & INSTALL, OPEN TRENCH	364	LF	$ 27.73 -	$ 10,093.36-
0630 2 12	CONDUIT, FURNISH & INSTALL, DIRECTIONAL BORE	120	LF	$ 33.41 -	$ 4,009.20 -
0630 2 14	CONDUIT, FURNISH & INSTALL, ABOVEGROUND	90	LF	$ 18.86 -	$ 1,697.67 -
0630 2 15	CONDUIT, FURNISH & INSTALL, BRIDGE MOUNT	697	LF	$ 20.64 -	$ 14,388.87-
0632 7 2	SIGNAL CABLE- REPAIR/REPLACE/OTHER, FURNISH & INSTALL	50	LF	$ 9.02 -	$ 451.10 -
0633 6	FIBER OPTIC CABLE LOCATOR	1	DA	$ 532.35-	$ 532.35 -
0635 2 11	PULL & SPLICE BOX, F&I, 13" x 24" COVER SIZE	15	EA	$ 3,202.50	$ 48,037.47-
0635 3 11	JUNCTION BOX, FURNISH & INSTALL, AERIAL	12	EA	$ 1914.60	$ 22,975.21
0639 1112	ELECTRICAL POWER SERVICE, F&I, OVERHEAD METER PURCHASED BY CONTRACTOR FROM POWER COMPANY	4	AS	$ 4,021.36-	$ 16,085.42 -

ITEM #	ITEM DESCRIPTION	QTY	UNIT of MEASURE	UNIT PRICE	EXTENDED PRICE
0639 2 1	ELECTRICAL SERVICE WIRE, FURNISH & INSTALL	360	LF	$8.37 -	$3,013.92 -
0639 3 11	ELECTRICAL SERVICE DISCONNECT, F&I, POLE MOUNT	1	EA	$4,292.60	$4,292.60 -
0641 2 12	PRESTRESSED CONCRETE POLE, F&I, TYPE P-II SERVICE POLE	4	EA	$4,484.75	$17,939.01
0646 1 11	ALUMINUM SIGNALS POLE, PEDESTAL	2	EA	$4,487.76	$8,975.51 -
0646 1 12	ALUMINUM SIGNALS POLE, FURNISH & INSTALL PEDESTRIAN DETECTOR POST	6	EA	$3,727.93	$22,367.59-
0653 1 11	PEDESTRIAN SIGNAL, FURNISH & INSTALL LED COUNTDOWN, 1 WAY	2	AS	$993.23	$1,986.45 -
0653 1 60	PEDESTRIAN SIGNAL, REMOVE PED SIGNAL- POLE/PEDESTAL TO REMAIN	2	AS	$354.90-	$709.80 -
0654 2 12	MIDBLOCK CROSSWALK: RECTANGULAR RAPID FLASHING BEACON, FURNISH & INSTALL-AC, COMPLETE SIGN ASSEMBLY- BACK TO BACK	6	AS	$15,733.90	$94,403.40
0665 1 11	PEDESTRIAN DETECTOR, FURNISH & INSTALL, STANDARD	2	EA	$785.51	$1,571.02 -
0665 1 60	PEDESTRIAN DETECTOR, REMOVE- POLE/PEDESTAL TO REMAIN	2	EA	$177.45-	$354.90 -
0700 1111	SINGLE COLUMN GROUND SIGN ASSEMBLY, F&I GROUND MOUNT, LESS THAN 12 SF	20	EA	$996.45	$19,929.00
0700 1600	SINGLE COLUMN GROUND SIGN ASSEMBLY, REMOVE	3	EA	$354.90	$1,064.70 -
0711 11123	THERMOPLASTIC, STANDARD, WHITE, SOLID, 12" FOR CROSSWALK AND ROUNDABOUT	442	LF	$18.00 -	$7,956.00 -
0711 11125	THERMOPLASTIC, STANDARD, WHITE, SOLID, 24" FOR STOP LINE AND CROSSWALK	470	LF	$21.00 -	$9,870.00 -
0711 11160	THERMOPLASTIC, STANDARD, WHITE, MESSAGE OR SYMBOL	2	EA	$595.00-	$1,190.00 -
0711 16101	THERMOPLASTIC, STANDARD-OTHER SURFACES, WHITE, SOLID, 6"	0.003	GM	$275,000.00	$825.00 -
0711 17 1	THERMOPLASTIC, REMOVE EXISTING THERMOPLASTIC PAVEMENT MARKINGS- SURFACE TO REMAIN	317	SF	$10.00 -	$3,170.00 -
0715 1 12	LIGHTING CONDUCTORS, F&I, INSULATED, NO.8 - 6	3,247	LF	$3.03 -	$9,835.16 -
0715 516-513	LIGHT POLE COMPLETE-SPECIAL DESIGN, F&I, POLE TOP MOUNT, WOOD, 13'	11	EA	$8,872.66	$97,599.22
0715 516-518	LIGHT POLE COMPLETE-SPECIAL DESIGN, F&I, POLE TOP MOUNT, WOOD, 18'	1	EA	$9,324.71	$9,324.71 -
0751 49	TIMBER PEDESTRIAN BRIDGE	5,472	SF	$87.00 -	$476,064.00
				SUB-TOTAL BID ITEMS:	$1,598,718.05

ITEMS TO BE LOCALLY FUNDED					
ITEM #	ITEM DESCRIPTION	QTY	UNIT of MEASURE	UNIT PRICE	EXTENDED PRICE
0522 2A	CONCRETE SHARED USE PATH, 7" THICK (HEAVY DUTY) (IN LIEU OF 4" THICK)	47	SY	$159.75	$7,508.25 -
CITY-01	18" WAPRO STAINLESS WASTOP INLINE CHECK VALVE	1	EA	$27,635.54	$27,635.54 -
				SUB-TOTAL LOCALLY FUNDED ITEMS:	$35,143.79-
				GRAND TOTAL ALL ITEMS:	$1,633,861.84

AFFIDAVIT REGARDING LABOR AND SERVICES

Effective July 1, 2024, pursuant to §787.06(13), Florida Statutes, when a contract is executed, renewed, or extended between a nongovernmental entity and a governmental entity, the nongovernmental entity must provide the governmental entity with an affidavit signed by an officer or a representative of the nongovernmental entity under penalty of perjury attesting that the nongovernmental entity does not use coercion for labor or services.

Nongovernmental Entity's Name:	Masci General Contractor, Inc.
Address:	5752 S. Ridgewood Avenue, Port Orange, FL 32127
Phone Number:	(386) 322-4500
Authorized Representative's Name:	Leticia M. Ferreira
Authorized Representative's Title:	Vice President
Email Address:	leticiamasci@mascigc.com

AFFIDAVIT

I, *insert nongovernmental entity's authorized representative name*, as authorized representative attest that *insert nongovernmental entity's name*does not use coercion for labor or services as defined in §787.06, Florida Statutes.

Under penalty of perjury, I declare that I have read the foregoing Affidavit and that the facts stated in it are true.

(Signature of authorized representative) 7/2/25 Date

STATE
COUNTY OF
Sworn to (or affirmed) and subscribed before me, by means of ☑ physical presence or ☐ online notarization, this day of (year), by

Notary Public

Commission Expires

HEATHER A. KNIGHT
Commission # HH 614855
Expires November 20, 2028

Personally Known ☑ OR Produced Identification ☐
Type of Identification Produced

BID BOND

BID BOND

Bond No.: N/A

KNOW ALL MEN BY THESE PRESENTS that Masci General Contractor, Inc., as Contractor, duly authorized to conduct business in the State of Florida, whose principal place of business is located at * , Tel.: (386) 322-4500 , (hereinafter called "PRINCIPAL"), and Arch Insurance Company , as SURETY, duly authorized to conduct business in the State of Florida, whose principal place of business is located at Harborside 3, 210 Hudson St., #300** , Tel: 201-743-4000 (hereinafter called "SURETY"), are held and firmly bound unto the City of Port Orange, Florida, as CITY, a Florida municipal corporation, whose address is City of Port Orange, 1000 City Center Circle, Port Orange, Florida 32129, Tel: (386) 506-5501, (hereinafter called "OBLIGEE" or CITY", in the penal sum of Five Percent of Amount Bid----------dollars and (-------)/100 ($---5%---), lawful money of the United States, for the payment of which sum shall and truly be made, whereof PRINCIPAL and SURETY bind themselves, their heirs, executors, administrators, successors and assigns, jointly and severally, firmly by these presents.

THE CONDITION OF THIS OBLIGATION IS SUCH that, whereas the Principal has submitted the accompanying bid, dated July 2nd, 2025, for:

Project Name/Bid No.: ITB #25-13; SJR2C Loop Trail, Port Orange, Florida

Project Address: Spruce Creek Road, from South of Selin Circle to Herbert Street, Port Orange, FL

Legal Description: See Attached

Description of Work: Concrete, Underground Utilities, Boardwalk, Trail, Electrical/Lighting

NOW, THEREFORE,

A. If the Principal shall not withdraw said bid withing one hundred twenty (120) days after date of opening of the same, and shall within ten (10) days after the prescribed forms are presented to it for signature, enter into a written contract with the City in accordance with the bid as accepted, and give bonds with good and sufficient surety or sureties, as may be required, for the faithful performance and proper fulfillment of such contract, then the above obligations shall be void and of no effect, otherwise to remain in full force and virtue.

B. In the event of the withdrawal of said bid within the period specified, or the failure to enter into such contract and give such bonds withing the time specified, if the principal shall pay the City the difference between the amount specified in said bid and the amount for which the City may procure the required work and supplies. If the latter amount be in excess of the former, then the above obligations then the above obligations shall be void and of no effect, otherwise to remain in full force and virtue.

IN WITNESS WHEREOF, the above parties have executed this instrument under their several seals, this 2nd day of July, 2025, the name and corporate seal of each corporate party being hereto affixed and these presents duly signed by its undersigned representative, pursuant to authority of its governing body.

Note: If the firm is a sole ownership or partnership including limited liability company, two (2) witnesses are required to attest the signature. If the firm is a corporation, then the corporate secretary shall attest and affix the corporate seal (Attach power of attorney to the original bid bond and financial statement of Surety Company).

*5752 S. Ridgewood Avenue, Port Orange, FL 32127

**, Jersey City, NJ 07311-1107

DESCRIPTION: The SJR2C Loop Trail (Spruce Creek Rd) project is within the City of Port Orange. The project is a Shared use path (SUNTrail) from south of Selin Circle to Herbert Street. This segment, of the much larger trail system, begins south of the intersection of Spruce Creek Road and Selin Circle. The 8-foot-wide concrete trail of 240 linear feet will extend northerly along the west side of Spruce Creek Road towards Oak Street utilizing a portion of the existing 8 feet concrete sidewalk and will continue along the east side of Halifax Canal from Oak Street to Dunlawton Avenue utilizing the existing 8-foot-wide trail for 1,190 linear feet. 986 linear feet of 12-foot-wide heavy-duty asphalt trail will then continue along Spruce Creek Road from Dunlawton Avenue to Canal View Boulevard. 715 linear feet of 8-foot boardwalk continues through a vacant city-owned parcel from Canal View Boulevard to 120 feet South of Herbert Street. The last segment will be 120 linear feet of 8-foot-wide concrete sidewalk connecting to the existing trail segment. Total project length is approximately 0.671 miles.

PRINCIPAL: Masci General Contractor, Inc.

Signature

Leticia M. Ferrera, Vice President

Corporate Officer & Title

ATTEST:

Signature

Ignacio Masci, Secretary

Corporate Secretary (Affix Corporate Seal)

WITNESSESS:

SURETY: Arch Insurance Company

Attorney-in-Fact (signature)

Jeffrey W. Reich*, Attorney-In-Fact

Name & Title

Jeffrey W. Reich*, FL Licensed Resident Agent

Name of Local Resident Agent

Harborside 3, 210 Hudson St., #300

City, State, Zip

Jersey City, NJ 07311-1107

Telephone: 201-743-4000

A.M. Best No.: 003186 NAIC No.: 11150

ATTEST:

Signature

Susan L. Reich

Corporate Secretary (Affix Corporate Seal)

*Inquiries: 407-786-7770

STATE OF FLORIDA

COUNTY OF ORANGE

Before me this day personally appeared Jeffrey W. Reich (affiant), who, being duly sworn, deposes and says that he/she is the Attorney-in-Fact for the Arch Insurance Company (corporate surety) and that this person has been authorized by Arch Insurance Company (corporate surety) to execute the foregoing bond on behalf of the Contractor named therein in favor of the City of Port Orange, Florida.

Signature of Affiant Jeffrey W. Reich

The foregoing instrument was acknowledged before me by means of ☒physical presence or ☐online notarization, this 2nd day of July, 2025, by Jeffrey W. Reich and who:

☒is personally known to me; or ☐ has produced N/A as identification.

Notary Public, State of FLORIDA

Printed, typed or stamped name, commission and expiration: 07/09/2026

Notary Public State of Florida
Elizabeth Luu Karoly
My Commission HH 283384
Expires 7/9/2026

END OF BID BOND

This document must be completed and returned with your Submittal

ARCH INSURANCE COMPANY
STATEMENT OF FINANCIAL CONDITION
DECEMBER 31, 2024

Assets

Cash & Cash Equivalents in Banks	175,754,117
Bonds owned	7,485,879,345
Stocks	956,862,153
Premiums in course of collection	1,406,595,498
Accrued interest and other assets	1,957,852,150
Total Assets	$ 11,982,943,263

Liabilities

Reserve for losses and adjustment expenses	$4,026,358,684
Reserve for unearned premiums	2,547,334,728
Ceded reinsurance premiums payable	1,430,834,505
Amounts withheld or retained by company for account of others	158,863,371
Reserve for taxes, expenses and other liabilities	1,152,110,034
Total Liabilities	$9,315,501,322
Surplus as regards policyholders	2,667,441,941
Total Surplus and Liabilities	$11,982,943,263

By: _____ Attest: _____

Executive Vice President, Chief Financial Officer and Treasurer

Executive Vice President, General Counsel and Secretary

State of New Jersey)
) SS
County of Hudson)

Thomas James Ahern, Executive Vice President, Chief Financial Officer and Treasurer and Regan Abby Shulman, Executive Vice President, General Counsel and Secretary being duly sworn, of ARCH INSURANCE COMPANY, Missouri; and that the foregoing is a true and correct statement of financial condition of said company, as of December 31, 2024.

Subscribed and sworn to before me, this 20 day of March 2025

Notary Public Barbara Lee

Barbara A Lee
NOTARY PUBLIC
State of New Jersey
ID # 50107758
My Commission Expires 6/27/2029

This Power of Attorney limits the acts of those named herein, and they have no authority to bind the Company except in the manner and to the extent herein stated. Not valid for Note, Loan, Letter of Credit, Currency Rate, Interest Rate or Residential Value Guarantees.

POWER OF ATTORNEY

Know All Persons By These Presents:
That the Arch Insurance Company, a corporation organized and existing under the laws of the State of Missouri, having its principal administrative office in Jersey City, New Jersey (hereinafter referred to as the "Company") does hereby appoint:

Cheryl Foley, Emily Golecki, Jeffrey W. Reich, Kim E. Niv, Lisa Roseland, Robert P. O'Linn, Sarah K. O'Linn, Susan L. Reich and Teresa L. Durham of Maitland, FL (EACH)

its true and lawful Attorney(s)in-Fact, to make, execute, seal, and deliver from the date of issuance of this power for and on its behalf as surety, and as its act and deed: Any and all bonds, undertakings, recognizances and other surety obligations, in the penal sum not exceeding One Hundred Fifty Million Dollars ($150,000,000.00). This authority does not permit the same obligation to be split into two or more bonds In order to bring each such bond within the dollar limit of authority as set forth herein.

The execution of such bonds, undertakings, recognizances and other surety obligations in pursuance of these presents shall be as binding upon the said Company as fully and amply to all intents and purposes, as if the same had been duly executed and acknowledged by its regularly elected officers at its principal administrative office in Jersey City, New Jersey.

This Power of Attorney is executed by authority of resolutions adopted by unanimous consent of the Board of Directors of the Company on August 31, 2022, true and accurate copies of which are hereinafter set forth and are hereby certified to by the undersigned Secretary as being in full force and effect:
"**VOTED**, That the Chairman of the Board, the President, or the Executive Vice President, or any Senior Vice President, of the Surety Business Division, or their appointees designated in writing and filed with the Secretary, or the Secretary shall have the power and authority to appoint agents and attorneys-in-fact, and to authorize them subject to the limitations set forth in their respective powers of attorney, to execute on behalf of the Company, and attach the seal of the Company thereto, bonds, undertakings, recognizances and other surety obligations obligatory in the nature thereof, and any such officers of the Company may appoint agents for acceptance of process."

This Power of Attorney is signed, sealed and certified by facsimile under and by authority of the following resolution adopted by the unanimous consent of the Board of Directors of the Company on August 31, 2022:

VOTED, That the signature of the Chairman of the Board, the President, or the Executive Vice President, or any Senior Vice President, of the Surety Business Division, or their appointees designated in writing and filed with the Secretary, and the signature of the Secretary, the seal of the Company, and certifications by the Secretary, may be affixed by facsimile on any power of attorney or bond executed pursuant to the resolution adopted by the Board of Directors on August 31, 2022, and any such power so executed, sealed and certified with respect to any bond or undertaking to which it is attached, shall continue to be valid and binding upon the Company. **In Testimony Whereof**, the Company has caused this instrument to be signed and its corporate seal to be affixed by their authorized officers, this **28th day of November, 2023**.

Attested and Certified

Regan A. Shulman, Secretary

Arch Insurance Company
CORPORATE SEAL 1977
Missouri

Arch Insurance Company

Stephen C. Ruschak, Executive Vice President

STATE OF PENNSYLVANIA SS
COUNTY OF PHILADELPHIA SS

I, **Michele Tripodi**, a Notary Public, do hereby certify that Regan A. Shulman and Stephen C. Ruschak personally known to me to be the same persons whose names are respectively as Secretary and Executive Vice President of the Arch Insurance Company, a Corporation organized and existing under the laws of the State of Missouri, subscribed to the foregoing instrument, appeared before me this day in person and severally acknowledged that they being thereunto duly authorized signed, sealed with the corporate seal and delivered the said instrument as the free and voluntary act of said corporation and as their own free and voluntary acts for the uses and purposes therein set forth.

Commonwealth of Pennsylvania - Notary Seal
MICHELE TRIPODI, Notary Public
Philadelphia County
My Commission Expires July 31, 2025
Commission Number 1168622

Michele Tripodi, Notary Public
My commission expires 07/31/2025

CERTIFICATION

I, **Regan A. Shulman**, Secretary of the Arch Insurance Company, do hereby certify that the attached **Power of Attorney dated November 28, 2023** on behalf of the person(s) as listed above is a true and correct copy and that the same has been in full force and effect since the date thereof and is in full force and effect on the date of this certificate; and I do further certify that the said Stephen C. Ruschak, who executed the Power of Attorney as Executive Vice President, was on the date of execution of the attached Power of Attorney the duly elected Executive Vice President of the Arch Insurance Company.

IN TESTIMONY WHEREOF, I have hereunto subscribed my name and affixed the corporate seal of the Arch Insurance Company on this 2nd **day of** July, **20**25.

Regan A. Shulman, Secretary

This Power of Attorney limits the acts of those named therein to the bonds and undertakings specifically named therein and they have no authority to bind the Company except in the manner and to the extent herein stated.

PLEASE SEND ALL CLAIM INQUIRIES RELATING TO THIS BOND TO THE FOLLOWING ADDRESS:
Arch Insurance – Surety Division
3 Parkway, Suite 1500
Philadelphia, PA 19102

Arch Insurance Company
CORPORATE SEAL 1977
Missouri

To verify the authenticity of this Power of Attorney, please contact Arch Insurance Company at SuretyAuthentic@archinsurance.com
Please refer to the above named Attorney-in-Fact and the details of the bond to which the power is attached.

Florida Department of Transportation

RON DESANTIS
GOVERNOR

605 Suwannee Street
Tallahassee, FL 32399-0450

JARED W. PERDUE, P.E.
SECRETARY

June 03, 2025

MASCI GENERAL CONTRACTORS, INC
5752 SOUTH RIDGEWOOD AVE
PORT ORANGE, FLORIDA 32127

REVISED
RE: CERTIFICATE OF QUALIFICATION

The Department of Transportation has qualified your company for the type of work indicated below.

FDOT APPROVED WORK CLASSES:
DRAINAGE, FLEXIBLE PAVING, GRADING, GRASSING, SEEDING AND SODDING, HOT PLANT-MIXED BITUM. COURSES, INTERMEDIATE BRIDGES, MINOR BRIDGES, SIDEWALK, CURB & GUTTER, MILLING, UNDERGROUND UTILITIES (WATER & SEWER).

Unless notified otherwise, this Certificate of Qualification will expire **6/30/2026**.

In accordance with Section 337.14(1), Florida Statutes, an application for qualification must be filed within (4) months of the ending date of the applicant's audited annual financial statements.

If the company's maximum capacity has been revised, it may be accessed by logging into the Contractor Prequalification Application System via the following link:
HTTPS://fdotwp1.dot.state.fl.us/ContractorPreQualification

Once logged in, select "View" for the most recently approved application, and then click the "Manage" and "Application Summary" tabs.

The company may apply for a Revised Certificate of Qualification at any time prior to the expiration date of this certificate according to Section 14-22.0041(3), Florida Administrative Code (F.A.C.), by accessing the most recently approved application as shown above and choosing "Update" instead of "View." If certification in additional classes of work is desired, documentation is needed to show that the company has performed such work.

All prequalified contractors are required by Section 14-22.006(3), F.A.C., to certify their work underway monthly in order to adjust maximum bidding capacity to available bidding capacity. You can find the link to this report at the website shown above.

Sincerely,

James E. Taylor II

James E. Taylor II, Prequalification Supervisor
Contracts Administration Office

JTII

Ron DeSantis, Governor

Melanie S. Griffin, Secretary

STATE OF FLORIDA
DEPARTMENT OF BUSINESS AND PROFESSIONAL REGULATION

CONSTRUCTION INDUSTRY LICENSING BOARD

THE GENERAL CONTRACTOR HEREIN IS CERTIFIED UNDER THE
PROVISIONS OF CHAPTER 489, FLORIDA STATUTES

MASCI, LEONEL ANDRES

MASCI GENERAL CONTRACTOR, INC.
5752 S RIDGEWOOD AVE
PORT ORANGE FL 32127

LICENSE NUMBER: CGC1518864

EXPIRATION DATE: AUGUST 31, 2026

Always verify licenses online at MyFloridaLicense.com

ISSUED: 05/13/2024

Do not alter this document in any form.

This is your license. It is unlawful for anyone other than the licensee to use this document.

Ron DeSantis, Governor

Melanie S. Griffin, Secretary

STATE OF FLORIDA
DEPARTMENT OF BUSINESS AND PROFESSIONAL REGULATION

CONSTRUCTION INDUSTRY LICENSING BOARD

THE UNDERGROUND UTILITY & EXCAVATION CO HEREIN IS CERTIFIED UNDER THE PROVISIONS OF CHAPTER 489, FLORIDA STATUTES

MASCI, LEONEL ANDRES

MASCI CORPORATION
5752 S RIDGEWOOD AVE
HARBOR OAKS FL 32127

LICENSE NUMBER: CUCA56854

EXPIRATION DATE: AUGUST 31, 2026

Always verify licenses online at MyFloridaLicense.com

ISSUED: 05/13/2024

Do not alter this document in any form.

This is your license. It is unlawful for anyone other than the licensee to use this document.

Ron DeSantis, Governor

Melanie S. Griffin, Secretary

FBPE
FLORIDA BOARD OF PROFESSIONAL ENGINEERS

STATE OF FLORIDA
DEPARTMENT OF BUSINESS AND PROFESSIONAL REGULATION
BOARD OF PROFESSIONAL ENGINEERS

THE PROFESSIONAL ENGINEER HEREIN IS LICENSED UNDER THE
PROVISIONS OF CHAPTER 471, FLORIDA STATUTES

MASCI, LEONEL ANDRES

5752 SOUTH RIDGEWOOD AVE
PORT ORANGE FL 32127

LICENSE NUMBER: PE68418

EXPIRATION DATE: FEBRUARY 28, 2027

Always verify licenses online at MyFloridaLicense.com

Do not alter this document in any form.

This is your license. It is unlawful for anyone other than the licensee to use this document.

Detail by Entity Name

Florida Profit Corporation
MASCI GENERAL CONTRACTOR, INC.

Filing Information

Document Number	P04000169369
FEI/EIN Number	20-2045800
Date Filed	12/17/2004
State	FL
Status	ACTIVE
Last Event	AMENDMENT
Event Date Filed	06/01/2010
Event Effective Date	NONE

Principal Address

5752 SOUTH RIDGEWOOD AVE
PORT ORANGE, FL 32127

Mailing Address

5752 SOUTH RIDGEWOOD AVE
PORT ORANGE, FL 32127

Registered Agent Name & Address

Ferreira, Leticia Maria Masci
5752 S RIDGEWOOD AVE
PORT ORANGE, FL 32127

Name Changed: 06/26/2025

Address Changed: 01/12/2021

Officer/Director Detail

Name & Address

Title President

MASCI, LEONEL
5752 SOUTH RIDGEWOOD AVE
PORT ORANGE, FL 32127

Title VP

MASCI, ANDRES
5752 SOUTH RIDGEWOOD AVE
PORT ORANGE, FL 32127

Title S

Masci, Ignacio
5752 S Ridgewood Ave
Port Orange, FL 32127

Title VP

Ferreira, Leticia Maria Masci
5752 SOUTH RIDGEWOOD AVE
PORT ORANGE, FL 32127

Annual Reports

Report Year	Filed Date
2024	02/08/2024
2025	02/05/2025
2025	06/26/2025

Document Images

06/26/2025 -- AMENDED ANNUAL REPORT	View image in PDF format
02/05/2025 -- ANNUAL REPORT	View image in PDF format
02/08/2024 -- ANNUAL REPORT	View image in PDF format
02/09/2023 -- ANNUAL REPORT	View image in PDF format
01/27/2022 -- ANNUAL REPORT	View image in PDF format
01/12/2021 -- ANNUAL REPORT	View image in PDF format
01/20/2020 -- ANNUAL REPORT	View image in PDF format
02/07/2019 -- ANNUAL REPORT	View image in PDF format
02/02/2018 -- ANNUAL REPORT	View image in PDF format
01/06/2017 -- ANNUAL REPORT	View image in PDF format
01/15/2016 -- ANNUAL REPORT	View image in PDF format
04/09/2015 -- AMENDED ANNUAL REPORT	View image in PDF format
01/09/2015 -- ANNUAL REPORT	View image in PDF format
04/03/2014 -- AMENDED ANNUAL REPORT	View image in PDF format
01/10/2014 -- ANNUAL REPORT	View image in PDF format
07/25/2013 -- AMENDED ANNUAL REPORT	View image in PDF format
02/19/2013 -- ANNUAL REPORT	View image in PDF format
04/09/2012 -- ANNUAL REPORT	View image in PDF format
01/06/2012 -- ANNUAL REPORT	View image in PDF format
01/20/2011 -- ANNUAL REPORT	View image in PDF format
06/01/2010 -- Amendment	View image in PDF format
05/17/2010 -- Amendment	View image in PDF format

Form **W-9**
(Rev. March 2024)
Department of the Treasury
Internal Revenue Service

Request for Taxpayer Identification Number and Certification

Go to *www.irs.gov/FormW9* for instructions and the latest information.

Give form to the requester. Do not send to the IRS.

Before you begin. For guidance related to the purpose of Form W-9, see *Purpose of Form*, below.

Print or type. See *Specific Instructions* on page 3.

1 Name of entity/individual. An entry is required. (For a sole proprietor or disregarded entity, enter the owner's name on line 1, and enter the business/disregarded entity's name on line 2.)

Masci General Contractor, Inc.

2 Business name/disregarded entity name, if different from above.

3a Check the appropriate box for federal tax classification of the entity/individual whose name is entered on line 1. Check only one of the following seven boxes.

☐ Individual/sole proprietor ☑ C corporation ☐ S corporation ☐ Partnership ☐ Trust/estate

☐ LLC. Enter the tax classification (C = C corporation, S = S corporation, P = Partnership) . . . . .

Note: Check the "LLC" box above and, in the entry space, enter the appropriate code (C, S, or P) for the tax classification of the LLC, unless it is a disregarded entity. A disregarded entity should instead check the appropriate box for the tax classification of its owner.

☐ Other (see instructions)

4 Exemptions (codes apply only to certain entities, not individuals; see instructions on page 3):

Exempt payee code (if any)

Exemption from Foreign Account Tax Compliance Act (FATCA) reporting code (if any)

(Applies to accounts maintained outside the United States.)

3b If on line 3a you checked "Partnership" or "Trust/estate," or checked "LLC" and entered "P" as its tax classification, and you are providing this form to a partnership, trust, or estate in which you have an ownership interest, check this box if you have any foreign partners, owners, or beneficiaries. See instructions . . . . . ☐

5 Address (number, street, and apt. or suite no.). See instructions.

5752 S. Ridgewood Avenue

Requester's name and address (optional)

6 City, state, and ZIP code

Port Orange, FL 32127

7 List account number(s) here (optional)

Part I Taxpayer Identification Number (TIN)

Enter your TIN in the appropriate box. The TIN provided must match the name given on line 1 to avoid backup withholding. For individuals, this is generally your social security number (SSN). However, for a resident alien, sole proprietor, or disregarded entity, see the instructions for Part I, later. For other entities, it is your employer identification number (EIN). If you do not have a number, see *How to get a TIN*, later.

Note: If the account is in more than one name, see the instructions for line 1. See also *What Name and Number To Give the Requester* for guidelines on whose number to enter.

Social security number

			–			–				

or

Employer identification number

2	0	–	2	0	4	5	8	0	0

Part II Certification

Under penalties of perjury, I certify that:

1. The number shown on this form is my correct taxpayer identification number (or I am waiting for a number to be issued to me); and
2. I am not subject to backup withholding because (a) I am exempt from backup withholding, or (b) I have not been notified by the Internal Revenue Service (IRS) that I am subject to backup withholding as a result of a failure to report all interest or dividends, or (c) the IRS has notified me that I am no longer subject to backup withholding; and
3. I am a U.S. citizen or other U.S. person (defined below); and
4. The FATCA code(s) entered on this form (if any) indicating that I am exempt from FATCA reporting is correct.

Certification instructions. You must cross out item 2 above if you have been notified by the IRS that you are currently subject to backup withholding because you have failed to report all interest and dividends on your tax return. For real estate transactions, item 2 does not apply. For mortgage interest paid, acquisition or abandonment of secured property, cancellation of debt, contributions to an individual retirement arrangement (IRA), and, generally, payments other than interest and dividends, you are not required to sign the certification, but you must provide your correct TIN. See the instructions for Part II, later.

Sign Here Signature of U.S. person [signature] Date 2/10/25

General Instructions

Section references are to the Internal Revenue Code unless otherwise noted.

Future developments. For the latest information about developments related to Form W-9 and its instructions, such as legislation enacted after they were published, go to *www.irs.gov/FormW9*.

What's New

Line 3a has been modified to clarify how a disregarded entity completes this line. An LLC that is a disregarded entity should check the appropriate box for the tax classification of its owner. Otherwise, it should check the "LLC" box and enter its appropriate tax classification.

New line 3b has been added to this form. A flow-through entity is required to complete this line to indicate that it has direct or indirect foreign partners, owners, or beneficiaries when it provides the Form W-9 to another flow-through entity in which it has an ownership interest. This change is intended to provide a flow-through entity with information regarding the status of its indirect foreign partners, owners, or beneficiaries, so that it can satisfy any applicable reporting requirements. For example, a partnership that has any indirect foreign partners may be required to complete Schedules K-2 and K-3. See the Partnership Instructions for Schedules K-2 and K-3 (Form 1065).

Purpose of Form

An individual or entity (Form W-9 requester) who is required to file an information return with the IRS is giving you this form because they

City of Port Orange Local Business Tax Receipt

CONTRACTOR - GENERAL (CLASS A)

City of Port Orange
Community Development
1000 City Center Circle
Port Orange, FL 32129
(386) 506-5602

CONTRACTOR - GENERAL (CLASS A) **License Number: L-0000001954**

Masci General Contractor Inc.
5752 RIDGEWOOD AVE
PORT ORANGE FL 32127

Fees Paid: **$100.00**
Issued Date: **08/05/2024**

08/05/2024 - 09/30/2025
Valid Dates

CERTIFICATE OF LIABILITY INSURANCE

DATE (MM/DD/YYYY): 11/12/2024

THIS CERTIFICATE IS ISSUED AS A MATTER OF INFORMATION ONLY AND CONFERS NO RIGHTS UPON THE CERTIFICATE HOLDER. THIS CERTIFICATE DOES NOT AFFIRMATIVELY OR NEGATIVELY AMEND, EXTEND OR ALTER THE COVERAGE AFFORDED BY THE POLICIES BELOW. THIS CERTIFICATE OF INSURANCE DOES NOT CONSTITUTE A CONTRACT BETWEEN THE ISSUING INSURER(S), AUTHORIZED REPRESENTATIVE OR PRODUCER, AND THE CERTIFICATE HOLDER.

IMPORTANT: If the certificate holder is an ADDITIONAL INSURED, the policy(ies) must have ADDITIONAL INSURED provisions or be endorsed. If SUBROGATION IS WAIVED, subject to the terms and conditions of the policy, certain policies may require an endorsement. A statement on this certificate does not confer rights to the certificate holder in lieu of such endorsement(s).

PRODUCER	CONTACT NAME: Julie Kuhlman
Brown & Brown Insurance Services, Inc. 300 N Beach Street Daytona Beach FL 32114	PHONE (A/C, No, Ext): (386) 239-5742 FAX (A/C, No): E-MAIL ADDRESS: Julie.Kuhlman@bbrown.com
INSURED Masci General Contractor, Inc Masci Construction Inc 5752 S Ridgewood Ave Port Orange FL 32127	INSURER(S) AFFORDING COVERAGE — NAIC # INSURER A : Allied World Surplus Lines Insurance Company — 24319 INSURER B : Starstone National Insurance Company — 25496 INSURER C : Great American Insurance Company — 16691 INSURER D : Bridgefield Casualty Insurance Company — 10335 INSURER E : Markel American Insurance Company — 28932 INSURER F : Indian Harbor Insurance Company — 36940

COVERAGES **CERTIFICATE NUMBER:** 24-25 **REVISION NUMBER:**

THIS IS TO CERTIFY THAT THE POLICIES OF INSURANCE LISTED BELOW HAVE BEEN ISSUED TO THE INSURED NAMED ABOVE FOR THE POLICY PERIOD INDICATED. NOTWITHSTANDING ANY REQUIREMENT, TERM OR CONDITION OF ANY CONTRACT OR OTHER DOCUMENT WITH RESPECT TO WHICH THIS CERTIFICATE MAY BE ISSUED OR MAY PERTAIN, THE INSURANCE AFFORDED BY THE POLICIES DESCRIBED HEREIN IS SUBJECT TO ALL THE TERMS, EXCLUSIONS AND CONDITIONS OF SUCH POLICIES. LIMITS SHOWN MAY HAVE BEEN REDUCED BY PAID CLAIMS.

INSR LTR	TYPE OF INSURANCE	ADDL INSD	SUBR WVD	POLICY NUMBER	POLICY EFF (MM/DD/YYYY)	POLICY EXP (MM/DD/YYYY)	LIMITS	
A	[X] COMMERCIAL GENERAL LIABILITY [ ] CLAIMS-MADE [X] OCCUR GEN'L AGGREGATE LIMIT APPLIES PER: [ ] POLICY [X] PRO-JECT [ ] LOC [ ] OTHER:			6004-1592	08/08/2024	08/08/2025	EACH OCCURRENCE DAMAGE TO RENTED PREMISES (Ea occurrence) MED EXP (Any one person) PERSONAL & ADV INJURY GENERAL AGGREGATE PRODUCTS - COMP/OP AGG [ ]	$ 2,000,000 $ 500,000 $ 5,000 $ 2,000,000 $ 4,000,000 $ 4,000,000 $
B	AUTOMOBILE LIABILITY [ ] ANY AUTO [ ] OWNED AUTOS ONLY [X] SCHEDULED AUTOS [ ] HIRED AUTOS ONLY [X] NON-OWNED AUTOS ONLY			APB4000035#2	08/08/2024	08/08/2025	COMBINED SINGLE LIMIT (Ea accident) BODILY INJURY (Per person) BODILY INJURY (Per accident) PROPERTY DAMAGE (Per accident) PIP	$ 1,000,000 $ $ $ $ 10,000
C	[X] UMBRELLA LIAB [X] OCCUR [ ] EXCESS LIAB [X] CLAIMS-MADE [ ] DED [X] RETENTION $ 0			TUU 4-05-55-16-03	08/08/2024	08/08/2025	EACH OCCURRENCE AGGREGATE Prods/C-ops	$ 4,000,000 $ 4,000,000 $ 4,000,000
D	WORKERS COMPENSATION AND EMPLOYERS' LIABILITY ANY PROPRIETOR/PARTNER/EXECUTIVE OFFICER/MEMBER EXCLUDED? (Mandatory in NH) Y/N [ ] If yes, describe under DESCRIPTION OF OPERATIONS below	N/A		0196-58610	08/08/2024	08/08/2025	[X] PER STATUTE [ ] OTH-ER E.L. EACH ACCIDENT E.L. DISEASE - EA EMPLOYEE E.L. DISEASE - POLICY LIMIT	 $ 1,000,000 $ 1,000,000 $ 1,000,000
E	Inland Marine			MKLM1IM0002689	08/08/2024	08/08/2025	Leased/Rented Per Item: Leased/Rented Per Occ: INSTALLATION	$750,000 $1,500,000 $500,000

DESCRIPTION OF OPERATIONS / LOCATIONS / VEHICLES (ACORD 101, Additional Remarks Schedule, may be attached if more space is required)

SEE NOTES FOR POLICY COVERAGE FORMS
FOR BIDDING PURPOSES ONLY

CERTIFICATE HOLDER

MASCI GENERAL CONTRACTORS INC
5752 S. RIDGEWOOD AVENUE
PORT ORANGE FL 32127

CANCELLATION

SHOULD ANY OF THE ABOVE DESCRIBED POLICIES BE CANCELLED BEFORE THE EXPIRATION DATE THEREOF, NOTICE WILL BE DELIVERED IN ACCORDANCE WITH THE POLICY PROVISIONS.

AUTHORIZED REPRESENTATIVE

© 1988-2015 ACORD CORPORATION. All rights reserved.

The ACORD name and logo are registered marks of ACORD

AGENCY CUSTOMER ID: _____

LOC #: _____

ADDITIONAL REMARKS SCHEDULE

AGENCY	NAMED INSURED
Brown & Brown Insurance Services, Inc.	Masci General Contractor, Inc
POLICY NUMBER	
CARRIER / NAIC CODE	EFFECTIVE DATE:

ADDITIONAL REMARKS

THIS ADDITIONAL REMARKS FORM IS A SCHEDULE TO ACORD FORM,

FORM NUMBER: 25 FORM TITLE: Certificate of Liability Insurance: Notes

PROFESSIONAL / POLLUTION LIABILITY:
POLICY NUMBER: PEC005962603
08/08/2024 – 08/08/2025
INSURER:F
PROFESSIONAL LIABILITY: $1,000,000
POLLUTION LIABILITY: $1,000,000
AGGREGATE LIMIT: $2,000,000

WORKERS COMPENSATION (MASCI CONSTRUCTION, INC)
POLICY NUMBER: 0196-58609
08/08/2024 - 08/08/2025:
INSURER: D
- E.L. EACH ACCIDENT $1,000,000
- E.L. DISEASE - EA EMPLOYEE $1,000,000
- E.L. DISEASE - POLICY LIMIT $1,000,000

EXCESS AUTO LIABILITY ($1M X $3M)
CARRIER: UPLAND SPECIALTY INSURANCE COMPANY / NAIC: 16988
POLICY # USXTL0712524
TERM: 08/08/2024 - 08/08/2025
EACH OCCURRENCE: $1,000,000
AGGREGATE: $1,000,000
EXCESS OVER PRIMARY AUTO & UMBRELLA (AUTO ONLY)

CURRENT BLANKET POLICY FORMS

GENERAL LIABILITY
1) CG2010 1219 - ADDITIONAL INSURED-OWNERS, LESSEES OR CONTRACTORS - AUTOMATIC STATUS WHEN REQUIRED IN CONSTRUCTION AGREEMENT WITH YOU (ADDITIONAL INSURED - ONGOING OPERATIONS)
2) CG2037 1219- ADDITIONAL INSURED – OWNERS, LESSEES OR CONTRACTORS – COMPLETED OPERATIONS (ADDITIONAL INSURED - COMPLETED OPERATIONS)
3) CG2034 1219 - ADDITIONAL INSURED – LESSOR OF LEASED EQUIPMENT – AUTOMATIC STATUS WHEN REQUIRED IN LEASE AGREEMENT WITH YOU
4) CG2404 1219 - WAIVER OF TRANSFER OF RIGHTS OF RECOVER AGAINST OTHERS TO US (WAIVER OF SUBROGATION)
5) CG2001 1219 - PRIMARY AND NON-CONTRIBUTORY - OTHER INSURANCE CONDITION

AUTO LIABILITY
1)CA2048B 1013 - DESIGNATED INSURED - BLANKET
2) CA0444B 1013 -WAIVER OF SUBROGATION- BLANKET

WORKERS COMPENSATION
1) WC000313 0484 - WAIVER OF OUR RIGHT TO RECOVER FROM OTHERS ENDORSEMENT (WAIVER OF SUBROGATION)

UMBRELLA LIABILITY
1.) GAI6002 0697 - THE PROTECTOR COMMERCIAL UMBRELLA COVERAGE FORM (ADDITIONAL INSURED, WAIVER OF SUBROGATION)
THE UMBRELLA POLICY APPLIES IN EXCESS OF THE GENERAL LIABILITY, AUTO LIABILITY AND EMPLOYERS LIABILITY

INLAND MARINE
1) IM7902 0112 - LOSS PAYABLE SCHEDULE (LOSS PAYEE)

POLLUTION LIABILITY
1) EVPCPOCCP 0424 - (ADDITIONAL INSURED, PRIMARY NON-CONTRIBUTORY, WAIVER OF SUBROGATION)

© 2008 ACORD CORPORATION. All rights reserved.
The ACORD name and logo are registered marks of ACORD

- 5 year -

COMPLETED CONTRACTS AND REFERENCES					
CONTRACT AMOUNT	**NAME OF PROJECT**	**YEAR COMPLETED**	**LOCATION**	**PROJECT CONTACT**	**SCOPE**
$500,000.00	E5x97-RO, roadway repair	2024	Volusia, Flagler, Seminole, Brevard County	FDOT - District 5 - 605 Suwannee St. Tallahassee, FL.	roadway repair, as needed
$1,023,128.69	City of Ormond Beach 2023 Road Resurfacing	2024	City of Ormond Beach	City of Ormond Beach, Public Works, 22 S. Beach Street, Room 104, Ormond Beach, Fl 32174m 386-676-3269	2023 Road Resurfacing
$16,029,260.78	CFX - SR 417 Resurfacing	2024	CFX	Central Florda Expressway Authority,	Resurfacing
$4,343,700.56	T5742- Wickham Rd @I95 Ramp	2024	Brevard County	FDOT - District 5 - 605 Suwannee St. Tallahassee, FL.	improvements, road widening
$787,145.48	E58A3 (sub to Chinchor)	2024	Brevard County	FDOT - 719 S. Woodland Blvd., Deland, FL 32720	improvements & resurfacing
$844,923.00	G1T27- Graham Swamp Trail	2023	Flagler County	Flagler County Board of County Commissioners	Trail and Pedestrain Bridge over State Road 100
$8,780,809.70	T5711 - Bridge Fiske	2023	Brevard County	FDOT - District 5 - 605 Suwannee St. Tallahassee, FL.	SR 519 (Fiske Blvd) Bridge
$13,106,590.67	Howland Blvd. Deltona, Widening	2022	Volusia County	Howland Boulevard, Deltona, FL	Road Widening & Drainage Improvements
$ 17,848,966.12	T5642 - SR46 Seminole County	2022	Seminole County	FDOT - District 5 - 605 Suwannee St. Tallahassee, FL.	Road Construction
$ 399,844.00	City of Ormond Beach Roadway Resurfacing	2022	Volusia County	Alex Schumann, 22 South Beach St, Ormond Beach, FL.	Resurfacing
$ 165,989.45	City of Titusville Neighborhood Services Department	2021	Brevard County	Kevin Cook, City of Titusville, 555 S. Washington Ave., Titusville, FL. (386) 567-3845	Minor Repairs
$ 1,556,034.12	City of Titusville Annual Resurfacing - Public Works	2021	Brevard County	William Larese, 555 S. Washington Ave., Titusville, FL. (321) 567-3682	Resurfacing

$ 237,197.28	City of Lake Mary Citywide Milling & Paving	2021	Seminole County	Kevin Smith, City of Lake Mary, 911 Wallace Ct. Lake Mary, FL.	Milling & Paving
$ 345,460.13	City of Ormond Beach Roadway Repaving	2021	Volusia County	Alex Schumann, 22 South Beach St, Ormond Beach, FL.	Repaving
$ 2,319,234.97	City of Palm Coast Street Resurfacing	2021	Flagler County	Tyler Gibson, City of Palm Coast, 160 Lake Ave Palm Coast, FL. (386) 986-3730	Resurfacing
$ 5,811,030.74	T5681 -SR 400 (I-4) Seminole County	2021	Seminole County	FDOT - District 5 - 605 Suwannee St. Tallahassee, FL.	Road Construction
$ 12,045,287.37	Riverwalk Phase III	2021	Seminole County	City of Sanford, 300 N. Park Ave. Sanford, FL. 32771, Bilal Iftikhar, (407) 688-5012	Trail Construction
$ 1,331,946.72	Fort Florida Rd	2021	Volusia County	Volusia County, 123 W. Indiana Avenue, Deland, FL	Road Construction
$ 4,976,836.09	T5680 Seminole County	2021	Seminole County	FDOT - District 5 - 605 Suwannee St. Tallahassee, FL.	Road Construction
$ 4,878,954.76	Williamson Blvd Widening	2021	Volusia County	Volusia County, 123 W. Indiana Avenue, Deland, FL.	Road Expansion
$ 4,979,528.50	Design Build	2020	Volusia County	Volusia County, 123 W. Indiana Avenue, Deland, FL.	Design Build
$ 1,514,579.45	S. Park Ave Stormwater	2020	Seminole County	City of Sanford, 300 N. Park Ave. Sanford, FL. 32771, Bilal Iftikhar, (407) 688-5012	Stormwater Improvements
$ 2,204,501.12	T5670, SRA1A & SR520	2020	Brevard County	FDOT - District 5 - 605 Suwannee St. Tallahassee, FL.	Road Construction
$ 4,991,772.04	T5660 - US 1 @ SR 44	2020	Volusia County	FDOT - District 5 - 605 Suwannee St. Tallahassee, FL.	Road Construction
$ 28,838,467.02	T5636 - I-95 - Palm Coast Pkwy to Flagler/St Johns County Line	2020	Flagler/St Johns County	FDOT - District 5 - Ronald Meade (386) 740-3401 Ron.Meade@dot.state.fl.us	Road Construction
$ 7,136,709.34	T5625 SR 414 - Maitland Blvd	2020	Orange County	FDOT - District 5 - 605 Suwannee St. Tallahassee, FL.	Road Construction

REFERENCES - PROJECTS COMPLETED

Project Name/Location:	FDOT #T5767, SR 528, Brevard County, Florida SR 528, from SR 5 to E of SR 3, Brevard County, Florida
Type of Project/Services:	milling, paving, grading, drainage, concrete, guardrail, signs/signals, striping
Owner/Agent:	Florida Department of Transporation / Pinnacle Doug Schumann dschumann@pinnaclecei.com (407) 496-9627
Contract Amount:	$ 10,858,007.49
Completed:	2024

Project Name/Location:	FDOT #T5727, SR 5, Volusia County, Florida SR 5, from Brevard Co Line to South St, Volusia County, Florida
Type of Project/Services:	milling, paving, grading, drainage, concrete, guardrail, signs, striping
Owner/Agent:	Florida Department of Transporation / Mehta Engineering Aun Shah ashah@mehtaeng.com (850) 341-6114
Contract Amount:	$ 6,972,041.32
Completed:	2022

Project Name/Location:	FDOT #E57A1, SR 600, Volusia County, Florida SR 5, from Brevard Co Line to South St, Volusia County, Florida
Type of Project/Services:	milling, paving, grading, drainage, concrete, signs/signals, striping
Owner/Agent:	Florida Department of Transporation / AE Engineering Terry Phillips tphillips@aeengineeringinc.com (407) 743-2799
Contract Amount:	$ 5,312,936.32
Completed:	2023

Project Name/Location:	Graham Swamp Trail & Pedestrian Bridge over SR 100, Flagler County, Florida Graham Swamp Trail, Palm Coast, Florida
Type of Project/Services:	milling, paving, bridge, grading, drainage, concrete, signs/signals, striping
Owner/Agent:	Flagler County Board of County Commissioners Amy Stroger astroger@flaglercounty.gov (386) 313-4047
Contract Amount:	$ 9,478,640.33
Completed:	2023

REFERENCES - PROJECTS COMPLETED

Project Name/Location:	FDOT #E57A4, SR 442, Volusia County, Florida SR 442, from W of I-95 to US 1, Volusia County, Florida
Type of Project/Services:	milling, paving, grading, drainage, concrete, signs/signals, striping
Owner/Agent:	Florida Department of Transporation / Mehta Engineering Aun Shah ashah@mehtaeng.com (850) 341-6114
Contract Amount:	$ 7,425,368.89
Completed:	2024 *****FDOT - Smoothest Pavement of the Year Award 2024*****

Project Name/Location:	FY24 Annual Road Resurfacing, Titusville, Florida Various Streets
Type of Project/Services:	milling & paving
Owner/Agent:	City of Titusville Kevin Cook kevin.cook@titusville.com (321) 383-5704
Contract Amount:	$ 1,589,544.95
Completed:	2024

Project Name/Location:	2024 Citywide Paving Project, City of Ormond Beach, Florida Various Streets
Type of Project/Services:	milling & paving
Owner/Agent:	City of Ormond Beach Alex Shumann alex.schumann@ormondbeach.org (321) 567-3775
Contract Amount:	$ 791,358.35
Completed:	2024

Project Name/Location:	SR 417 Resurfacing, Orlando, Florida SR 417, SR 528 to Berry Dease Rd, Orange County, Florida
Type of Project/Services:	milling & paving
Owner/Agent:	Central Florida Expressway Authority (CFX) / RK&K Chas Starr cstarr@rkk.com (407) 923-4908
Contract Amount:	$ 16,029,260.78
Completed:	2024

Project Name/Location:	FDOT #E5X97, Volusia, Flagler, Seminole & Brevard County Florida Resurfacing Various Streets
Type of Project/Services:	milling & paving
Owner/Agent:	Florida Department of Transporation (FDOT) Brahim Sahraoui brahim.sahraoui@dot.state.fl.us
Contract Amount:	$ 500,000.00 budgetary ceiling
Completed:	2023

Masci Equipment List - Owned and Available

Equipment #	Year	Make/Model	VIN/Serial #
		DUMP TRUCKS	
DPT001-4435	2002	Mack RD688S	1M2P267C82M064435
DPT002-6387	2006	Mack CV713	1M2AG11C36M036387
DPT007-8803	2010	Mack GU713	1M2AX07C2AM008803
DPT010-6681	2009	Mack GU713	1M2AX07CX9M006681
DPT011-8175	2010	Mack GU713	1M2AX07CXAM008175
DPT012-1964	2007	Mack CV713	1M2AG11C67M061964
DPT014-7057	2009	Mack GU713 - Black	1M2AX04CX9M007057
DPT015-6201	2009	Mack GU713 - Orange	1M2AX04C89M006201
DPT016-7375	2009	Mack GU713 - Orange	1M2AX04C29M007375
DPT020-0621	2000	Mack RD690S - White	1M2P264C4YM030621
DPT021-8147	2010	Mack GU713 - Orange	1M2AX04CXAM008147
DPT023-9196	2004	Mack CV713 - White/Red	1M2AG11C84M009196
DPT024-4764	2007	Mack CTP713 - White	1M2AT04C87M004764
DPT025-4762	2007	Mack CTP713 - White	1M2AT04C47M004762
DPT027-7238	2009	Mack GU713 - Blue	1M2AX09C29M007238
DPT029-7236	2009	Mack GU713 - Blue	1M2AX09C99M007236
DPT030-7237	2009	Mack GU713 - Blue	1M2AX09C09M007237
DPT031-7352	2016	Mack CU713 - White	1M2AX09C5GM027352
DPT032-3101	2010	Kenworth T800 - White	1NKDL40X4AJ263101
DPT033-1617	2015	Kenworth T800	1NKDX4TXXFJ441617
DPT034-8856	2011	Mack GU713 - White/Red Body	1M2AX04C4BM008856
DPT039-6293	2023	MACK GR64B	1M2GR3GC4PM036293
DPT040-8005	2018	MACK GU713	1M2AX09C7JM038005
DPT041-8008	2018	MACK GU713	1M2AX09C2JM038008
DPT042-4367	2021	FRHT M2106	3ALACXFC4MDMS4367
DPT043-8757	2024	MACK GR64F	1M2GR4GC7RM038757
DPT044-8751	2024	MACK GR64F	1M2GR4GC6RM038751
DPT045-1876	2023	MACK GR64F	1M2GR4GC6PM031876
DPT046-8531	2025	MACK GR64F	1M2GR4GC1SM048531
DPT047-4653	2025	MACK GR64F	1M2GR4GC6SM044653
		TRACTOR TRAILER TRUCKS	
TTR003-6404	2010	Mack CH613	1M1AN07Y0AN006404
TTR004-6532	2009	Mack GU713	1M2AX07C49M006532
TTR005-7559	2009	Mack GU713	1M1AX09Y09M007559
TTR006-6784	2015	MACK - CXU613	1M1AW02Y3FM046784
TTR007-6737	2015	MACK - CXU613	1M1AW02Y5FM046737
TTR008-4863	2015	Peterbilt 389	1XPXP4EXXFD274863
TTR009-0499	2024	KENWORTH W990 HEAVY HAUL	1XK1P4EX0RJ370499
TTR010-0277	2023	MACK P164T DAY CAB	1M1PN4GY6PM010277
		SERVICE TRUCKS	
SER001-8265	2006	Freightliner M2-106	1FVACXCS86HV78265
SER002-2530	2015	Dodge Ram 5500	3C7WRNFL9FG502530
SER003-0906	2009	GMC C-5500 (BLUE)	1GDG5C3969F400906
SER003-8585	2016	Dodge Ram 4500	3C7WRLBLOGG148585
SER004-0983	2004	Freightliner FL-70	1FVABSDC84HN00983
SER005-6684	2007	International 4300	1HTMMAAN47H456684

SER006-1228	2016	Isuzu NQR Service Truck - RED	JALE5W161G7901228
SER007-2175	2011	RAM 5500 SLT - White	3D6WA7EL7BG502175
SER008-1095	2015	Freightliner M2-106	3ALACWDT9FDGC1095
SER009-0052	2023	ISUZU FTR	54DK6S1FXPSA50052
SER010-0243	2025	Freightliner M2-106 plus	1FVHCYFEXSHVK0243
SER011-1731	2025	ISUZU NRR	JALE5W166S7P01731
SER012-0588	2024	RAM 5500	3C7WRNBL8RG240588
		WATER TRUCKS	
WT001-3498	1992	Ford Water Truck F700	1FDXK74C8NVA33498
WT002-4648	1995	International 4700	1HTSMABM2SH664648
WT003-6800	1999	International 4700	1HTSCAAM4XH676800
WT005-6304	2001	Isuzu COE Water Truck	JALB4B14817016304
WT006-9028	2015	Freightliner m2 106 medium duty	3ALACXDT3FDGA9028
WT007-9109	2014	Freightliner m2	3ALACXCY4EDFV9109
		MISC. TRUCKS	
FBT003-8944	2000	Int'l. Flatbed 4700	1HTSCABM2YH228944
FBT-4351	2010	Isuzu Flatbed NPR	JALC4W165A7004351
FBT-3115	1998	International 4900	1HTSDAAN8WH523115
FBT-8642	1994	Ford F-700 Flat Bed	1FDWK74C0RVA18642
FBT-1476	1970	Mack Dump	DM487S1476
FBT-0296	2018	Isuzu Flatbed NPR	JALB4W176J7F00296
FBT-0943	2013	Isuzu Flatbed NPR	JALB4W174D7400943
FBT-7022	2023	ISUZU NRR	JALE5VV162P7307022
FBT-3678	2009	INTERNATIONAL 7400 6X4	1HTWGAAR29J143678
		SUPERVISOR / MGMT TRUCKS	
PKU006-6028	2006	Chevy C-1500 - Blue	2GCEC13T261226028
PKU011-8590	2011	Toyota Tundra	5TFEY5F17BX108590
PKU013-0862	2012	Toyota Tundra	5TFRM5F1XCX050862
PKU014-2687	2012	Toyota Tundra	5TFDW5F11CX212687
PKU-3096	2018	Toyota Tundra 4x2 - White	5TFRM5F13JX123096
PKU-0419	2017	Toyota Tundra- White	5TFRM5F1XHX110419
PKU-6039	2019	Toyota Tundra - White	5TFRM5F1XKX136039
PKU-7700	2016	Nissan Titan XD	1N6BA1F43GN517700
PKU-7962	2022	Chevy Silverado 1500	3GCNAAED9NG567962
PKU-7747	2019	Toyota Tundra	5TFAY5F18KX797747
PKU-2549	2019	Toyota Tundra	5TFHY5F18KX782549
		BACKHOES	
BH004-3882	2010	Caterpillar 420E	HLS03882
BH005-0543	2013	Caterpillar 420 FIT	JWJ00543
		DOZERS	
DZ003-0351	2013	Caterpillar D5K	YYY00351
DZ004-9851	2009	John Deere 650J	JX169851
DZ006-1927	2013	Komatsu D65WX-17	1927
		EXCAVATORS	
EXC001-7358	1987	Komatsu PC 200	27358
EXC006-3812	2006	Kobelco SK135SRLC	YH04-03812
EXC007-0616	2006	Hyundai ROBEX360LC-7	NA0110616
EXC009-0074	2007	Hyundai ROBEX450LC-7A	NB0310074
EXC010-0062	2007	Hyundai ROBEX450LC-7A	NB0310062

EXC011-0380	2008	Hyundai ROBEX210LC-7A	N6120380
EXC012-1463	2009	Hitachi ZX135HYD	FF01SCQ071463
EXC013-0215	2010	Komatsu PC308USLC-3	20215
EXC014-0288	2010	Komatsu PC308MSLC	20288
EXC015-0413	2012	Caterpillar 304ECR	TTN00413
EXC016-0321	2012	Caterpillar M318D	D8W00321
EXC017-0136	2008	Komatsu PC308USLC-8	30136
EXC-6339	2006	Komatsu PC50MR-2	6339
EXC-8614	2017	Kubota KX040-4R1T w/ 6 way Blade	28614-24QC
EXC-0464	2019	Kubota KX057-4R1A Excavator	30464
EXC-0274	2017	Hyundai 220LC-9A Hydraulic Excavator	HHKHZ610VE0000274
EXC-0117	2011	Hyundia Robex 480LC-9 Track	HHIHQB01LB0000117
EXC-1051	2005	Kobelco SK250	LL09U1051
EXC-1243	2019	John Deere 135G FT	1FF135QXAKF501243
EXC-5525	2020	KOBELCO SK140SRLC-7	YY09045525
EXC-5452	2017	Komatsu PC360LC-11	A35452
EXC-0364	2022	HYUNDAI HX210AL HYDRAULIC	CE0000364
EXC-1425	2018	LINKBELT 300X4 HYDRAULIC	LBX300Q7NJHEX1425
EXC-3616	2022	JOHN DEERE 85G	1FF085GXTNJ023616
EXC-0106	2022	KUBOTA KX060-5 HYDRAULIC	KBCDZ37EHN3G10106
EXC-0191	2008	KOMATSU PC308USLC-3E0	KMTPC160A02030191
EXC-1930	2023	HYUNDAI R35Z	HHKHMH04LE0001930
EXC-1485	2020	JOHN DEERE 135G HYDRAULIC	1FF135GXLKF501485
EXC-1490	2023	LINK BELT 75X3	LBX075Q6NNHEX1490
EXC-2184	2023	HYUNDAI R35Z-9A	HHKHMH04VE0002184
EXC-1155	2018	LINKBELT 490X	LBX49007NHHEX1155
EXC-1102	2023	KOBELCO SK55SRX-7	PS05061102
EXC-0189	2024	HITACHI ZX50U-5N	HCMAED60P00300189
EXC-0317	2024	MIVA VA 20	VA20240317
EXC-1921	2021	LINK-BELT 145X4DZ	LBX145Q7NLHEX1921
EXC-0019	2025	HYUNDAI HX355ALCRD	DWGCECHZHR1010019
		LOADERS	
LDR002-7045	2006	John Deere 444J	DW444JZ607045
LDR003-1702	2006	John Deere 444J	DW444JZ611702
LDR004-7637	2006	John Deere 544J	DW544JZ607637
LDR005-7297	2006	John Deere 544J	DW544JZ607297
LDR007-0768	2006	Hyundai HL757-7	LD0110768
LDR008-7877	2007	John Deere 544J	DW544JZ607877
LDR010-0090	2008	Hyundai HL740-7A	LF0710090
LDR015-2020	2012	John Deere 544K	1DW544KZEBD642020
LDR016-1131	2011	John Deere 544K	1DW544KZTBD641131
LDR017-9761	2017	John Deere 544KII	1DW544KXEHF679761
LDR019-6145	2017	Case 621F Rubber Tired	NGF236145
LDR020-6291	2017	Case 521F Rubber Tired	6291
LDR023-1729	2021	John Deere 544P	1DW544PAPMLZ11729
LDR024-2012	2021	John Deere 544K-II	1DW544KZLHF682012
LDR025-0876	2022	HYUNDAI HL940	HHKHW400PK0000876

LDR026-0354	2018	HYUNDAI HL960	HHKHW600KI0000354
LDR027-0711	2020	HYUNDAI HL960	HHKHW600EL0000711
LDR029-0433	2022	HYUNDAI HL940A	HHKHWL40KL0000433
LDR030-0401	2023	JOHN DEERE 544-G TIER	1YN544GAHPLA00401
LDR031-0464	2023	JOHN DEERE 544-G TIER	1YN544GAEPLA00464
LDR032-0242	2024	HYUNDAI HL975	HHKHW770KL0000242
LDR033-8917	2024	HITACHI ZW95-6C	W09P10355RBA08917
LDR034-6350	2023	CASE 321F	FNH321FHNPH06350
		SWEEPERS	
SWP002-6191	2006	Lay Mor 6HC	26191-002
SWP004-3160	2008	Lay Mor 8HC	33160
SWP005-2223	2008	Lay Mor 8HC	32223
SWP006-3525	2010	Lay Mor 8HC	33525
SWP009-7923	2012	Kubota MX5100	SN57923
SWP010-7285	2016	Lay Mor Sweepster SM300	SN37285
SWP-5739	2014	John Deere 5055E Broom Tractor	1LV5055ECEY245739
SWP-9619	2008	Rosco 4820 Broom	49619
SWP-7791	2015	Rosco Sweep Pro 4930	127791
SWP-6883	2019	Kubota MX5200HST Tractor	66883
SWP-4320	2013	Lay Mor SM300	34320
SWP-4276	2013	Lay Mor 8HC	34276
SWP-4344	2013	Lay Mor 8HC	34344
SWP-6595	2018	FRHT M2 W/ JOHNSTON ES351	1FVACXFC9KHKL6595
SWP-2776		Kubota L4760	42776
SWP-7719	2022	KUBOTA MX5400	17719
SWP-7326	2019	ROSCO RB50 BROOM`	207326
SWP-2562	2024	ODRA MT4H ROAD SWEEPER/CHEVY 5500XD	JALEEW165R7302562
SWP-0817	2022	LAYMOR SM300	40817
SWP-1477	2021	ROSCO NV55	NV55-291477
		ROLLERS	
RL006-5607	2007	Ingersoll Rand SD450-TF	185607
RL007-1863	2007	Bomag BW-211-D3	9.01581E+11
RL008-1060	2008	Bomag BW-145-DH3	9.01581E+11
RL011-0962	2008	Caterpillar CB-434D	CNH00962
RL012-0469	2013	Caterpillar CB-534D	EAA00469
RL013-1074	2010	Caterpillar CB-434D	CNH01074
RL-0152	1999	Dynapac CS141	21720152
RL-9813	2014	Leeboy/Rosco 915	79813
RL-2235	1984	Hyster C340B Tandem	B146C-2235F
RL-0637	2012	Hamm HD140VO Asphalt Roller	H1840637
RL-1786	2014	Sakai SW850II Asphalt Roller	4SW56-501786
RL-0177	2014	Sakai SW850II Asphalt Roller	4SW56-50177C
RL-0254	2015	Hamm H7i	H2220254
RL-2749	2019	Hamm HD12VV	H2302749
RL-0798		HYUNDAI HR30T-R	3603110E120798

RL-1065	2012	HAMM HD 70	H1871065
RL-1486	2018	BOMAG BW211D-5 84" SMOOTH DRUM	101586081486
RL-0264		Sakai SW850ND	4SW56-50264
RL-1239		DEMO DYNAPAC CC1000	31239
RL-2122	2008	LEEBOY/TRUPAC 915	915-52122
RL-3405	2022	DYNAPAC CC950 DOUBLE DRUM	10000381CNA033405
RL-6894	2023	HAMM HD12VV ASPHALT ROLLER	WGH0H230EHAA06894
RL-6424	2023	DYNAPAC CC950 DOUBLE DRUM	10000381PPA036424
RL-7018	2023	DYNAPAC CA1400D	10000186EPA037018
RL-3880	2022	DYNAPAC CA3500D	33880
RL-1231	2024	BOMAG BW120AD-5	961880891231
RL-1050	2022	BOMAG BW206AD-5	101921811050
RL-0354	2019	HAMM HD120IVO	WGH0H243VHAA00354
RL-1101	2025	BOMAG BW28RH	961538501101
SKID STEERS			
SKD006-1423	2011	Caterpillar 279C	MBT01423
SKD-1569	2017	Case SV185	NHM431569
SKD-4158	2016	Takeuchi TL8RW	200804158
SKD-4838	2019	Caterpillar 246D Skid Steer	BYF04838
SKD-4835	2019	Caterpillar246D	BYF04835
SKD-6558	2020	John Deere 333G	1T0333GKPLF386558
SKD-0261	2014	Cat 236D skid steer loader	CAT0236DHBGZ00261
SKD-1368	2013	Takeuchi TL 230	223101368
SKD-0246	2020	Takeuchi TL8R20-R	408000246
SKD-2600	2022	Takeuchi TL8R-2CH	408002600
SKD-7498	2021	John Deere 332G	1T00332GMLMF397498
SKD-2732	2022	Takeuchi TL8R-2	408002732
SKD-0483		Takeichi TL8R2 Track Loader	408000483
SKD-4552	2022	MANITOU 1350RT TRACK LOADER	MAN1350TC0D304552
SKD-6239	2021	JOHN DEERE 325G RUBBER TRACK	1T0325GKKMJ406239
SKD-0862	2023	CAT 246D3	CAT0246DKT9Z00862
SKD-4046	2023	JOHN DEERE 325G	1T0325GKEPJ454046
SKD-5269	2023	TaKeuchi TL8R-2	408005269
SKD-5975	2023	JOHN DEERE 325G	1T0325GKTPJ455975
SKD-4052	2021	JOHN DEERE 333G	1T0333GMLMF404052
SKD-1144		CAT 246D3	CAT0246DAT9Z01144
PAVING EQUIPMENT			
PX008-0977	2014	Hamm HD120VO	H1840977
PX009-3043	2014	Roadtec Paver 190E	RP190E-X3043
PX010-0008		Blaw-Knox RW-100 Road Widener	0980-008
PX011-6389	2014	International Leeboy MAXIII	1HTWAAAN8DJ196389
PX012-1327	2017	Wirtgen W200i Milling Machine	14201327
PX014-0731	2004	Roadtec SB2500C Shuttle Buggy	731
PX015-0002	2019	Kenworth Tack Truck w/Etnyre Centennial Tank	2NKHHM7X9KM300002 / S7678
PX017-0738	2004	Roadtec SB2500C Shuttle Buggy	SB2500C-738
PX018-1133	2014	CAT Weiler E1250A Shuttle Buggy	1133
PX019-0008	2019	Kenworth Tack Truck w/Etnyre Centennial	2NKHHM7XXKM300008
PX020-1034	2015	Wirtgen W210i Milling Machine	15201034
PX021-0049	2017	Vogele 2003-3i	975.0049
PX022-0117	2018	VOGELE SUPER 1300-3i	14110117

PX023-0071	2017	VOGELE SUPER 2003-3i	9750071
PX024-1165	2016	Wirtgen W210i Milling Machine	15201165
PX025-0054	2017	VOGELE 2003-3I PAVER	975.0054
PX026-0067	2017	VOGELE 2003-3I PAVER	975.0067
PX027-0034	2020	Wirtgen W220Fi tracked cold planer	11220034
PX028-2963	2024	CAT PC306 24" HIGH FLOW COLD PLANER	0ERC02963
PX029-3237	2020	DYNAPAC MF2500CS	10002459LKG003237
PX030-1002		BOMAG BMF2500	1002
PX031-3045	2024	KENWORTH T380	2NK4HM7X5RM353045
PX032-0552	2025	VOGELE SUPER 1700-3i	WGV01982TJVA00552
		ROAD GRADERS	
RG002-9379		Leeboy Grader 685B	49379
RG004-5433	2015	Case 865B	NFAF05433
RG005-0196	2019	SANY SMG200 14'	PY1220BH0196
RG006-0013	2019	SANY SMG200 12'	PY1220BJ0013
		TRAILERS	
TRL005-9077	1994	Wabash Flatbed Trailer	1JJF45266RL249077
TRL006-0127	2006	Lark Storage Trailer	5RTBE12136D000127
TRL007-912T	2006	Lark Storage Trailer	5RTBE12136D99912T
TRL010-0216	2007	Witzco Challenger / RN35	1W8B21F3X7S000216
TRL012-5177	2009	VMA/Pace/Cargo	4FPUB14259G135177
TRL013-3646	2009	EASD Red Tilt Trailer ET20-14	4YZET202691013646
TRL016-9535	2012	Haulmark Utility	16HCB1013CG099535
TRL017-3710	2013	Big T Black / Trailer	16VNX1627D3C73710
TRL018-0753	2013	Freedom Trailer	5WKBE1620D1020753
TRL019-4412	2013	Bendron/Titan Cargo	5UZBE1225DD024412
TRL020-1900		Mobile 60x12Office Trailer	DBI01900
TRL022-0298	2013	Econoline Trailer	42ETPFG22D1000298
TRL024-0445	2015	Eager Beaver / Low Boy 50-60 Tn	112SD3532FL080445
TRL-8977	2015	FVCG/Cargo Trailer	5NHUNS629FU108977
TRL-0124	1997	Dorsey Dump Trailer (Aluminum)	1DTD18D24VS080124
TRL025-T201	2005	SSP - Dewatering Trailer	SST05025143EQT201
TRL026-9701	2003	ASPT Dewatering Trailer	NOVIN0200299701
TRL-2622	2017	Anvil Trailer AT7X12TA2 (7x12)	7FYBE122XHD002622
TRL029-9567	2011	Leeboy Trailer	1B9AA1112B1309567
TRL-3742	2017	COTC Trailer	4YMBU1019HG023742
TRL-0068	2018	Witzco Challenger Low Boy Trailer	1W8A11F32JS000068
TRL-1089	2019	Anvil Trailer AT7X12TA2 (7x12)	7FYBE1229KD011089
TRL-3279	2019	Covered TA Gold series white (7x12)	53FBE1224KF053279
TRL-3306	2019	Down to Earth DTE58G29 8' black	5MYUU0811KB063306
TRL-7524	2019	Anderson Trailer 6x14	4YNBN1428KC087524
TRL-3479	2019	Down to Earth DTE58G29 8' black	5MYUU081XKB063479
TRL-9869	2020	Anderson Trailer	4YNBN1213LC089869
TRL-7123	1984	Etnyre LWR/ tr6	1E9T42206GE007123
TRL-0384	2006	DETA	1S9BU101665460384
TRL-6244	2021	PDQ UT6X12TA BLACK 12FT	1P91U1223MD796244
TRL-3451	2022	BIG TEX 16' BUMPER PULL	16V1U1925N3163451
TRL-2740	2022	BIG TEX 16' BUMPER PULL	16VIU2029N3172740
TRL-2272	2024	TRAILSTAR ALUMINUM DUMP	5MADS2431RC082272

TRL-1013	2023	CARRY ON TRAILER/UTILITY LANDSCAPE	4YMBU0816PG011013
TRL-0320	2024	WITZCO RG52 DETACHABLE GOOSENECK	1W8A11E31RS000320
TRL-5094	2024	SURE TRAC UTILITY TRAILER	5JW1U1217R1415094
TRL-6160	2025	MAC ALUMINUM DUMP	5MADS2437SC076160
TRL-4899	2023	NVAE 6X10	5JW1U1015P1404899
TRL-7249	2023	NVAE 7X18	5JW1U1821P2387249
TRL-0616	2025	BIG TEX UTILITY TRAILER	16V1U1722S3380616
TRL-0785	2025	CARRY-ON TRAILER	4YMBU0819SG010785
TRL-7976	2025	NVAE 7X16+4 TILT BED	5JW1U2029S1437976
		MISC. EQUIPMENT	
MIC006-0623	2006	Gomaco GT3600 G21	902900623
MIC007-2899	2016	John Deere Mower Z540M-48A	1GXZ540MEGG012899
MIC008-1099	1989	Caterpillar R80 Rough Terrain Forklift	49A01099
MIC010-9145	2014	Terex-Finlay 684 Screener	TRX00684JDGE89145
MIC011-6670	2017	Buffalo Turbine EFI Cyclone KB5	S/N: 26670
MIC012-1530	2007	Genie Z80 Manlift	Z80071530
MIC013-0167	2014	Caterpillar Asphalt Compactor 44B	NSL00167
MIC015-0269	2002	Caterpillar RM-250C	CATRM250CAWG00269
MIC018	2014	GENIE GS1930 19' ELECTRIC	
MIC019-2762	2016	DOOSAN G30P-5 5500 LB PNEUMATIC TIRE	FGA0C-1790-02762
MIC020-0368	2016	Snorkel A46JRT boom lift 4X4	A46JRT-04-000368
MIC021-7939		TEREX FINLAY 120RS CRUSHER	TRX120RSC0MN37939
		All Pro Concrete Pulverizer Direct Connect	APCP-235
MIC022-0506	2022	TOYOTA 8FGU25 FORKLIFT	10506
MIC023-5389	2018	GENIE SX125XCV	SX125-389
MIC024-9916	2021	BELL B30E ARTICULATING DUMP	B93A631EA03009916

E-Verify

Company ID Number: 1454791

THE E-VERIFY MEMORANDUM OF UNDERSTANDING FOR EMPLOYERS

ARTICLE I
PURPOSE AND AUTHORITY

The parties to this agreement are the Department of Homeland Security (DHS) and Masci General Contractor, Inc. (Employer). The purpose of this agreement is to set forth terms and conditions which the Employer will follow while participating in E-Verify.

E-Verify is a program that electronically confirms an employee's eligibility to work in the United States after completion of Form I-9, Employment Eligibility Verification (Form I-9). This Memorandum of Understanding (MOU) explains certain features of the E-Verify program and describes specific responsibilities of the Employer, the Social Security Administration (SSA), and DHS.

Authority for the E-Verify program is found in Title IV, Subtitle A, of the Illegal Immigration Reform and Immigrant Responsibility Act of 1996 (IIRIRA), Pub. L. 104-208, 110 Stat. 3009, as amended (8 U.S.C. § 1324a note). The Federal Acquisition Regulation (FAR) Subpart 22.18, "Employment Eligibility Verification" and Executive Order 12989, as amended, provide authority for Federal contractors and subcontractors (Federal contractor) to use E-Verify to verify the employment eligibility of certain employees working on Federal contracts.

ARTICLE II
RESPONSIBILITIES

A. RESPONSIBILITIES OF THE EMPLOYER

1. The Employer agrees to display the following notices supplied by DHS in a prominent place that is clearly visible to prospective employees and all employees who are to be verified through the system:

   a. Notice of E-Verify Participation

   b. Notice of Right to Work

2. The Employer agrees to provide to the SSA and DHS the names, titles, addresses, and telephone numbers of the Employer representatives to be contacted about E-Verify. The Employer also agrees to keep such information current by providing updated information to SSA and DHS whenever the representatives' contact information changes.

3. The Employer agrees to grant E-Verify access only to current employees who need E-Verify access. Employers must promptly terminate an employee's E-Verify access if the employer is separated from the company or no longer needs access to E-Verify.

4. The Employer agrees to become familiar with and comply with the most recent version of the E-Verify User Manual.

5. The Employer agrees that any Employer Representative who will create E-Verify cases will complete the E-Verify Tutorial before that individual creates any cases.

a. The Employer agrees that all Employer representatives will take the refresher tutorials when prompted by E-Verify in order to continue using E-Verify. Failure to complete a refresher tutorial will prevent the Employer Representative from continued use of E-Verify.

6. The Employer agrees to comply with current Form I-9 procedures, with two exceptions:

a. If an employee presents a "List B" identity document, the Employer agrees to only accept "List B" documents that contain a photo. (List B documents identified in 8 C.F.R. § 274a.2(b)(1)(B)) can be presented during the Form I-9 process to establish identity.) If an employee objects to the photo requirement for religious reasons, the Employer should contact E-Verify at 888-464-4218.

b. If an employee presents a DHS Form I-551 (Permanent Resident Card), Form I-766 (Employment Authorization Document), or U.S. Passport or Passport Card to complete Form I-9, the Employer agrees to make a photocopy of the document and to retain the photocopy with the employee's Form I-9. The Employer will use the photocopy to verify the photo and to assist DHS with its review of photo mismatches that employees contest. DHS may in the future designate other documents that activate the photo screening tool.

Note: Subject only to the exceptions noted previously in this paragraph, employees still retain the right to present any List A, or List B and List C, document(s) to complete the Form I-9.

7. The Employer agrees to record the case verification number on the employee's Form I-9 or to print the screen containing the case verification number and attach it to the employee's Form I-9.

8. The Employer agrees that, although it participates in E-Verify, the Employer has a responsibility to complete, retain, and make available for inspection Forms I-9 that relate to its employees, or from other requirements of applicable regulations or laws, including the obligation to comply with the antidiscrimination requirements of section 274B of the INA with respect to Form I-9 procedures.

a. The following modified requirements are the only exceptions to an Employer's obligation to not employ unauthorized workers and comply with the anti-discrimination provision of the INA: (1) List B identity documents must have photos, as described in paragraph 6 above; (2) When an Employer confirms the identity and employment eligibility of newly hired employee using E-Verify procedures, the Employer establishes a rebuttable presumption that it has not violated section 274A(a)(1)(A) of the Immigration and Nationality Act (INA) with respect to the hiring of that employee; (3) If the Employer receives a final nonconfirmation for an employee, but continues to employ that person, the Employer must notify DHS and the Employer is subject to a civil money penalty between $550 and $1,100 for each failure to notify DHS of continued employment following a final nonconfirmation; (4) If the Employer continues to employ an employee after receiving a final nonconfirmation, then the Employer is subject to a rebuttable presumption that it has knowingly

employed an unauthorized alien in violation of section 274A(a)(1)(A); and (5) no E-Verify participant is civilly or criminally liable under any law for any action taken in good faith based on information provided through the E-Verify.

b. DHS reserves the right to conduct Form I-9 compliance inspections, as well as any other enforcement or compliance activity authorized by law, including site visits, to ensure proper use of E-Verify.

9. The Employer is strictly prohibited from creating an E-Verify case before the employee has been hired, meaning that a firm offer of employment was extended and accepted and Form I-9 was completed. The Employer agrees to create an E-Verify case for new employees within three Employer business days after each employee has been hired (after both Sections 1 and 2 of Form I-9 have been completed), and to complete as many steps of the E-Verify process as are necessary according to the E-Verify User Manual. If E-Verify is temporarily unavailable, the three-day time period will be extended until it is again operational in order to accommodate the Employer's attempting, in good faith, to make inquiries during the period of unavailability.

10. The Employer agrees not to use E-Verify for pre-employment screening of job applicants, in support of any unlawful employment practice, or for any other use that this MOU or the E-Verify User Manual does not authorize.

11. The Employer must use E-Verify for all new employees. The Employer will not verify selectively and will not verify employees hired before the effective date of this MOU. Employers who are Federal contractors may qualify for exceptions to this requirement as described in Article II.B of this MOU.

12. The Employer agrees to follow appropriate procedures (see Article III below) regarding tentative nonconfirmations. The Employer must promptly notify employees in private of the finding and provide them with the notice and letter containing information specific to the employee's E-Verify case. The Employer agrees to provide both the English and the translated notice and letter for employees with limited English proficiency to employees. The Employer agrees to provide written referral instructions to employees and instruct affected employees to bring the English copy of the letter to the SSA. The Employer must allow employees to contest the finding, and not take adverse action against employees if they choose to contest the finding, while their case is still pending. Further, when employees contest a tentative nonconfirmation based upon a photo mismatch, the Employer must take additional steps (see Article III.B. below) to contact DHS with information necessary to resolve the challenge.

13. The Employer agrees not to take any adverse action against an employee based upon the employee's perceived employment eligibility status while SSA or DHS is processing the verification request unless the Employer obtains knowledge (as defined in 8 C.F.R. § 274a.1(l)) that the employee is not work authorized. The Employer understands that an initial inability of the SSA or DHS automated verification system to verify work authorization, a tentative nonconfirmation, a case in continuance (indicating the need for additional time for the government to resolve a case), or the finding of a photo mismatch, does not establish, and should not be interpreted as, evidence that the employee is not work authorized. In any of such cases, the employee must be provided a full and fair opportunity to contest the finding, and if he or she does so, the employee may not be terminated or suffer any adverse employment consequences based upon the employee's perceived employment eligibility status

(including denying, reducing, or extending work hours, delaying or preventing training, requiring an employee to work in poorer conditions, withholding pay, refusing to assign the employee to a Federal contract or other assignment, or otherwise assuming that he or she is unauthorized to work) until and unless secondary verification by SSA or DHS has been completed and a final nonconfirmation has been issued. If the employee does not choose to contest a tentative nonconfirmation or a photo mismatch or if a secondary verification is completed and a final nonconfirmation is issued, then the Employer can find the employee is not work authorized and terminate the employee's employment. Employers or employees with questions about a final nonconfirmation may call E-Verify at 1-888-464-4218 (customer service) or 1-888-897-7781 (worker hotline).

14. The Employer agrees to comply with Title VII of the Civil Rights Act of 1964 and section 274B of the INA as applicable by not discriminating unlawfully against any individual in hiring, firing, employment eligibility verification, or recruitment or referral practices because of his or her national origin or citizenship status, or by committing discriminatory documentary practices. The Employer understands that such illegal practices can include selective verification or use of E-Verify except as provided in part D below, or discharging or refusing to hire employees because they appear or sound "foreign" or have received tentative nonconfirmations. The Employer further understands that any violation of the immigration-related unfair employment practices provisions in section 274B of the INA could subject the Employer to civil penalties, back pay awards, and other sanctions, and violations of Title VII could subject the Employer to back pay awards, compensatory and punitive damages. Violations of either section 274B of the INA or Title VII may also lead to the termination of its participation in E-Verify. If the Employer has any questions relating to the anti-discrimination provision, it should contact OSC at 1-800-255-8155 or 1-800-237-2515 (TDD).

15. The Employer agrees that it will use the information it receives from E-Verify only to confirm the employment eligibility of employees as authorized by this MOU. The Employer agrees that it will safeguard this information, and means of access to it (such as PINS and passwords), to ensure that it is not used for any other purpose and as necessary to protect its confidentiality, including ensuring that it is not disseminated to any person other than employees of the Employer who are authorized to perform the Employer's responsibilities under this MOU, except for such dissemination as may be authorized in advance by SSA or DHS for legitimate purposes.

16. The Employer agrees to notify DHS immediately in the event of a breach of personal information. Breaches are defined as loss of control or unauthorized access to E-Verify personal data. All suspected or confirmed breaches should be reported by calling 1-888-464-4218 or via email at E-Verify@dhs.gov. Please use "Privacy Incident – Password" in the subject line of your email when sending a breach report to E-Verify.

17. The Employer acknowledges that the information it receives from SSA is governed by the Privacy Act (5 U.S.C. § 552a(i)(1) and (3)) and the Social Security Act (42 U.S.C. 1306(a)). Any person who obtains this information under false pretenses or uses it for any purpose other than as provided for in this MOU may be subject to criminal penalties.

18. The Employer agrees to cooperate with DHS and SSA in their compliance monitoring and evaluation of E-Verify, which includes permitting DHS, SSA, their contractors and other agents, upon

reasonable notice, to review Forms I-9 and other employment records and to interview it and its employees regarding the Employer's use of E-Verify, and to respond in a prompt and accurate manner to DHS requests for information relating to their participation in E-Verify.

19. The Employer shall not make any false or unauthorized claims or references about its participation in E-Verify on its website, in advertising materials, or other media. The Employer shall not describe its services as federally-approved, federally-certified, or federally-recognized, or use language with a similar intent on its website or other materials provided to the public. Entering into this MOU does not mean that E-Verify endorses or authorizes your E-Verify services and any claim to that effect is false.

20. The Employer shall not state in its website or other public documents that any language used therein has been provided or approved by DHS, USCIS or the Verification Division, without first obtaining the prior written consent of DHS.

21. The Employer agrees that E-Verify trademarks and logos may be used only under license by DHS/USCIS (see M-795 (Web)) and, other than pursuant to the specific terms of such license, may not be used in any manner that might imply that the Employer's services, products, websites, or publications are sponsored by, endorsed by, licensed by, or affiliated with DHS, USCIS, or E-Verify.

22. The Employer understands that if it uses E-Verify procedures for any purpose other than as authorized by this MOU, the Employer may be subject to appropriate legal action and termination of its participation in E-Verify according to this MOU.

B. RESPONSIBILITIES OF FEDERAL CONTRACTORS

1. If the Employer is a Federal contractor with the FAR E-Verify clause subject to the employment verification terms in Subpart 22.18 of the FAR, it will become familiar with and comply with the most current version of the E-Verify User Manual for Federal Contractors as well as the E-Verify Supplemental Guide for Federal Contractors.

2. In addition to the responsibilities of every employer outlined in this MOU, the Employer understands that if it is a Federal contractor subject to the employment verification terms in Subpart 22.18 of the FAR it must verify the employment eligibility of any "employee assigned to the contract" (as defined in FAR 22.1801). Once an employee has been verified through E-Verify by the Employer, the Employer may not create a second case for the employee through E-Verify.

a. An Employer that is not enrolled in E-Verify as a Federal contractor at the time of a contract award must enroll as a Federal contractor in the E-Verify program within 30 calendar days of contract award and, within 90 days of enrollment, begin to verify employment eligibility of new hires using E-Verify. The Employer must verify those employees who are working in the United States, whether or not they are assigned to the contract. Once the Employer begins verifying new hires, such verification of new hires must be initiated within three business days after the hire date. Once enrolled in E-Verify as a Federal contractor, the Employer must begin verification of employees assigned to the contract within 90 calendar days after the date of enrollment or within 30 days of an employee's assignment to the contract, whichever date is later.

b. Employers enrolled in E-Verify as a Federal contractor for 90 days or more at the time of a contract award must use E-Verify to begin verification of employment eligibility for new hires of the Employer who are working in the United States, whether or not assigned to the contract, within three business days after the date of hire. If the Employer is enrolled in E-Verify as a Federal contractor for 90 calendar days or less at the time of contract award, the Employer must, within 90 days of enrollment, begin to use E-Verify to initiate verification of new hires of the contractor who are working in the United States, whether or not assigned to the contract. Such verification of new hires must be initiated within three business days after the date of hire. An Employer enrolled as a Federal contractor in E-Verify must begin verification of each employee assigned to the contract within 90 calendar days after date of contract award or within 30 days after assignment to the contract, whichever is later.

c. Federal contractors that are institutions of higher education (as defined at 20 U.S.C. 1001(a)), state or local governments, governments of Federally recognized Indian tribes, or sureties performing under a takeover agreement entered into with a Federal agency under a performance bond may choose to only verify new and existing employees assigned to the Federal contract. Such Federal contractors may, however, elect to verify all new hires, and/or all existing employees hired after November 6, 1986. Employers in this category must begin verification of employees assigned to the contract within 90 calendar days after the date of enrollment or within 30 days of an employee's assignment to the contract, whichever date is later.

d. Upon enrollment, Employers who are Federal contractors may elect to verify employment eligibility of all existing employees working in the United States who were hired after November 6, 1986, instead of verifying only those employees assigned to a covered Federal contract. After enrollment, Employers must elect to verify existing staff following DHS procedures and begin E-Verify verification of all existing employees within 180 days after the election.

e. The Employer may use a previously completed Form I-9 as the basis for creating an E-Verify case for an employee assigned to a contract as long as:

i. That Form I-9 is complete (including the SSN) and complies with Article II.A.6,

ii. The employee's work authorization has not expired, and

iii. The Employer has reviewed the Form I-9 information either in person or in communications with the employee to ensure that the employee's Section 1, Form I-9 attestation has not changed (including, but not limited to, a lawful permanent resident alien having become a naturalized U.S. citizen).

f. The Employer shall complete a new Form I-9 consistent with Article II.A.6 or update the previous Form I-9 to provide the necessary information if:

i. The Employer cannot determine that Form I-9 complies with Article II.A.6,

ii. The employee's basis for work authorization as attested in Section 1 has expired or changed, or

iii. The Form I-9 contains no SSN or is otherwise incomplete.

Note: If Section 1 of Form I-9 is otherwise valid and up-to-date and the form otherwise complies with

Article II.C.5, but reflects documentation (such as a U.S. passport or Form I-551) that expired after completing Form I-9, the Employer shall not require the production of additional documentation, or use the photo screening tool described in Article II.A.5, subject to any additional or superseding instructions that may be provided on this subject in the E-Verify User Manual.

g. The Employer agrees not to require a second verification using E-Verify of any assigned employee who has previously been verified as a newly hired employee under this MOU or to authorize verification of any existing employee by any Employer that is not a Federal contractor based on this Article.

3. The Employer understands that if it is a Federal contractor, its compliance with this MOU is a performance requirement under the terms of the Federal contract or subcontract, and the Employer consents to the release of information relating to compliance with its verification responsibilities under this MOU to contracting officers or other officials authorized to review the Employer's compliance with Federal contracting requirements.

C. RESPONSIBILITIES OF SSA

1. SSA agrees to allow DHS to compare data provided by the Employer against SSA's database. SSA sends DHS confirmation that the data sent either matches or does not match the information in SSA's database.

2. SSA agrees to safeguard the information the Employer provides through E-Verify procedures. SSA also agrees to limit access to such information, as is appropriate by law, to individuals responsible for the verification of Social Security numbers or responsible for evaluation of E-Verify or such other persons or entities who may be authorized by SSA as governed by the Privacy Act (5 U.S.C. § 552a), the Social Security Act (42 U.S.C. 1306(a)), and SSA regulations (20 CFR Part 401).

3. SSA agrees to provide case results from its database within three Federal Government work days of the initial inquiry. E-Verify provides the information to the Employer.

4. SSA agrees to update SSA records as necessary if the employee who contests the SSA tentative nonconfirmation visits an SSA field office and provides the required evidence. If the employee visits an SSA field office within the eight Federal Government work days from the date of referral to SSA, SSA agrees to update SSA records, if appropriate, within the eight-day period unless SSA determines that more than eight days may be necessary. In such cases, SSA will provide additional instructions to the employee. If the employee does not visit SSA in the time allowed, E-Verify may provide a final nonconfirmation to the employer.

Note: If an Employer experiences technical problems, or has a policy question, the employer should contact E-Verify at 1-888-464-4218.

D. RESPONSIBILITIES OF DHS

1. DHS agrees to provide the Employer with selected data from DHS databases to enable the Employer to conduct, to the extent authorized by this MOU:

a. Automated verification checks on alien employees by electronic means, and

b. Photo verification checks (when available) on employees.

2. DHS agrees to assist the Employer with operational problems associated with the Employer's participation in E-Verify. DHS agrees to provide the Employer names, titles, addresses, and telephone numbers of DHS representatives to be contacted during the E-Verify process.

3. DHS agrees to provide to the Employer with access to E-Verify training materials as well as an E-Verify User Manual that contain instructions on E-Verify policies, procedures, and requirements for both SSA and DHS, including restrictions on the use of E-Verify.

4. DHS agrees to train Employers on all important changes made to E-Verify through the use of mandatory refresher tutorials and updates to the E-Verify User Manual. Even without changes to E-Verify, DHS reserves the right to require employers to take mandatory refresher tutorials.

5. DHS agrees to provide to the Employer a notice, which indicates the Employer's participation in E-Verify. DHS also agrees to provide to the Employer anti-discrimination notices issued by the Office of Special Counsel for Immigration-Related Unfair Employment Practices (OSC), Civil Rights Division, U.S. Department of Justice.

6. DHS agrees to issue each of the Employer's E-Verify users a unique user identification number and password that permits them to log in to E-Verify.

7. DHS agrees to safeguard the information the Employer provides, and to limit access to such information to individuals responsible for the verification process, for evaluation of E-Verify, or to such other persons or entities as may be authorized by applicable law. Information will be used only to verify the accuracy of Social Security numbers and employment eligibility, to enforce the INA and Federal criminal laws, and to administer Federal contracting requirements.

8. DHS agrees to provide a means of automated verification that provides (in conjunction with SSA verification procedures) confirmation or tentative nonconfirmation of employees' employment eligibility within three Federal Government work days of the initial inquiry.

9. DHS agrees to provide a means of secondary verification (including updating DHS records) for employees who contest DHS tentative nonconfirmations and photo mismatch tentative nonconfirmations. This provides final confirmation or nonconfirmation of the employees' employment eligibility within 10 Federal Government work days of the date of referral to DHS, unless DHS determines that more than 10 days may be necessary. In such cases, DHS will provide additional verification instructions.

ARTICLE III
REFERRAL OF INDIVIDUALS TO SSA AND DHS

A. REFERRAL TO SSA

1. If the Employer receives a tentative nonconfirmation issued by SSA, the Employer must print the notice as directed by E-Verify. The Employer must promptly notify employees in private of the finding and provide them with the notice and letter containing information specific to the employee's E-Verify

case. The Employer also agrees to provide both the English and the translated notice and letter for employees with limited English proficiency to employees. The Employer agrees to provide written referral instructions to employees and instruct affected employees to bring the English copy of the letter to the SSA. The Employer must allow employees to contest the finding, and not take adverse action against employees if they choose to contest the finding, while their case is still pending.

2. The Employer agrees to obtain the employee's response about whether he or she will contest the tentative nonconfirmation as soon as possible after the Employer receives the tentative nonconfirmation. Only the employee may determine whether he or she will contest the tentative nonconfirmation.

3. After a tentative nonconfirmation, the Employer will refer employees to SSA field offices only as directed by E-Verify. The Employer must record the case verification number, review the employee information submitted to E-Verify to identify any errors, and find out whether the employee contests the tentative nonconfirmation. The Employer will transmit the Social Security number, or any other corrected employee information that SSA requests, to SSA for verification again if this review indicates a need to do so.

4. The Employer will instruct the employee to visit an SSA office within eight Federal Government work days. SSA will electronically transmit the result of the referral to the Employer within 10 Federal Government work days of the referral unless it determines that more than 10 days is necessary.

5. While waiting for case results, the Employer agrees to check the E-Verify system regularly for case updates.

6. The Employer agrees not to ask the employee to obtain a printout from the Social Security Administration number database (the Numident) or other written verification of the SSN from the SSA.

B. REFERRAL TO DHS

1. If the Employer receives a tentative nonconfirmation issued by DHS, the Employer must promptly notify employees in private of the finding and provide them with the notice and letter containing information specific to the employee's E-Verify case. The Employer also agrees to provide both the English and the translated notice and letter for employees with limited English proficiency to employees. The Employer must allow employees to contest the finding, and not take adverse action against employees if they choose to contest the finding, while their case is still pending.

2. The Employer agrees to obtain the employee's response about whether he or she will contest the tentative nonconfirmation as soon as possible after the Employer receives the tentative nonconfirmation. Only the employee may determine whether he or she will contest the tentative nonconfirmation.

3. The Employer agrees to refer individuals to DHS only when the employee chooses to contest a tentative nonconfirmation.

4. If the employee contests a tentative nonconfirmation issued by DHS, the Employer will instruct the

employee to contact DHS through its toll-free hotline (as found on the referral letter) within eight Federal Government work days.

5. If the Employer finds a photo mismatch, the Employer must provide the photo mismatch tentative nonconfirmation notice and follow the instructions outlined in paragraph 1 of this section for tentative nonconfirmations, generally.

6. The Employer agrees that if an employee contests a tentative nonconfirmation based upon a photo mismatch, the Employer will send a copy of the employee's Form I-551, Form I-766, U.S. Passport, or passport card to DHS for review by:

a. Scanning and uploading the document, or

b. Sending a photocopy of the document by express mail (furnished and paid for by the employer).

7. The Employer understands that if it cannot determine whether there is a photo match/mismatch, the Employer must forward the employee's documentation to DHS as described in the preceding paragraph. The Employer agrees to resolve the case as specified by the DHS representative who will determine the photo match or mismatch.

8. DHS will electronically transmit the result of the referral to the Employer within 10 Federal Government work days of the referral unless it determines that more than 10 days is necessary.

9. While waiting for case results, the Employer agrees to check the E-Verify system regularly for case updates.

ARTICLE IV
SERVICE PROVISIONS

A. NO SERVICE FEES

1. SSA and DHS will not charge the Employer for verification services performed under this MOU. The Employer is responsible for providing equipment needed to make inquiries. To access E-Verify, an Employer will need a personal computer with Internet access.

ARTICLE V
MODIFICATION AND TERMINATION

A. MODIFICATION

1. This MOU is effective upon the signature of all parties and shall continue in effect for as long as the SSA and DHS operates the E-Verify program unless modified in writing by the mutual consent of all parties.

2. Any and all E-Verify system enhancements by DHS or SSA, including but not limited to E-Verify checking against additional data sources and instituting new verification policies or procedures, will be covered under this MOU and will not cause the need for a supplemental MOU that outlines these changes.

B. TERMINATION

1. The Employer may terminate this MOU and its participation in E-Verify at any time upon 30 days prior written notice to the other parties.

2. Notwithstanding Article V, part A of this MOU, DHS may terminate this MOU, and thereby the Employer's participation in E-Verify, with or without notice at any time if deemed necessary because of the requirements of law or policy, or upon a determination by SSA or DHS that there has been a breach of system integrity or security by the Employer, or a failure on the part of the Employer to comply with established E-Verify procedures and/or legal requirements. The Employer understands that if it is a Federal contractor, termination of this MOU by any party for any reason may negatively affect the performance of its contractual responsibilities. Similarly, the Employer understands that if it is in a state where E-Verify is mandatory, termination of this by any party MOU may negatively affect the Employer's business.

3. An Employer that is a Federal contractor may terminate this MOU when the Federal contract that requires its participation in E-Verify is terminated or completed. In such cases, the Federal contractor must provide written notice to DHS. If an Employer that is a Federal contractor fails to provide such notice, then that Employer will remain an E-Verify participant, will remain bound by the terms of this MOU that apply to non-Federal contractor participants, and will be required to use the E-Verify procedures to verify the employment eligibility of all newly hired employees.

4. The Employer agrees that E-Verify is not liable for any losses, financial or otherwise, if the Employer is terminated from E-Verify.

ARTICLE VI
PARTIES

A. Some or all SSA and DHS responsibilities under this MOU may be performed by contractor(s), and SSA and DHS may adjust verification responsibilities between each other as necessary. By separate agreement with DHS, SSA has agreed to perform its responsibilities as described in this MOU.

B. Nothing in this MOU is intended, or should be construed, to create any right or benefit, substantive or procedural, enforceable at law by any third party against the United States, its agencies, officers, or employees, or against the Employer, its agents, officers, or employees.

C. The Employer may not assign, directly or indirectly, whether by operation of law, change of control or merger, all or any part of its rights or obligations under this MOU without the prior written consent of DHS, which consent shall not be unreasonably withheld or delayed. Any attempt to sublicense, assign, or transfer any of the rights, duties, or obligations herein is void.

D. Each party shall be solely responsible for defending any claim or action against it arising out of or related to E-Verify or this MOU, whether civil or criminal, and for any liability wherefrom, including (but not limited to) any dispute between the Employer and any other person or entity regarding the applicability of Section 403(d) of IIRIRA to any action taken or allegedly taken by the Employer.

E. The Employer understands that its participation in E-Verify is not confidential information and may be disclosed as authorized or required by law and DHS or SSA policy, including but not limited to,

Congressional oversight, E-Verify publicity and media inquiries, determinations of compliance with Federal contractual requirements, and responses to inquiries under the Freedom of Information Act (FOIA).

F. The individuals whose signatures appear below represent that they are authorized to enter into this MOU on behalf of the Employer and DHS respectively. The Employer understands that any inaccurate statement, representation, data or other information provided to DHS may subject the Employer, its subcontractors, its employees, or its representatives to: (1) prosecution for false statements pursuant to 18 U.S.C. 1001 and/or; (2) immediate termination of its MOU and/or; (3) possible debarment or suspension.

G. The foregoing constitutes the full agreement on this subject between DHS and the Employer.

To be accepted as an E-Verify participant, you should only sign the Employer's Section of the signature page. If you have any questions, contact E-Verify at 1-888-464-4218.

E-Verify

Company ID Number: 1454791

Approved by:

Employer Masci General Contractor, Inc.	
Name (Please Type or Print) Leticia M Ferreira	Title
Signature Electronically Signed	Date 09/30/2019
Department of Homeland Security – Verification Division	
Name (Please Type or Print) USCIS Verification Division	Title
Signature Electronically Signed	Date 09/30/2019

E-Verify

Company ID Number: 1454791

Information Required for the E-Verify Program **Information relating to your Company:**	
Company Name	Masci General Contractor, Inc.
Company Facility Address	5752 South Ridgewood Ave Port Orange, FL 32127
Company Alternate Address	
County or Parish	VOLUSIA
Employer Identification Number	202045800
North American Industry Classification Systems Code	237
Parent Company	
Number of Employees	100 to 499
Number of Sites Verified for	1 site(s)

E-Verify

Company ID Number: 1454791

Are you verifying for more than 1 site? If yes, please provide the number of sites verified for in each State:

FL	1

Company ID Number: 1454791

Information relating to the Program Administrator(s) for your Company on policy questions or operational problems:

Name	Leticia M Ferreira
Phone Number	3863224500
Fax	3863224600
Email	leticiamasci@masciqc.com

STATUS OF CONTRACTS ON HAND

Give full information about all of your contracts, whether prime or subcontracts; whether in progress or awarded but not yet begun; and regardless of its location and with whom contracted.

1	2	3	4	5	6	7
CLASSES OF WORK	**DOT PROJECTS AND LOCATION OF WORK YOU ARE PERFORMING**	**CONTRACT (OR SUBCONTRACT) AMOUNT**	**AMOUNT SUBLET TO OTHERS**	**BALANCE OF CONTRACT AMOUNT**	**UNCOMPLETED AMOUNT TO BE DONE BY APPLICANT**	
					AS PRIME CONTRACTOR	**AS SUBCONTRACTOR**
	T5736, SR 426, Oviedo, Seminole Co	$19,997,789.33	$5,115,784.29	$14,882,005.04	$50,000.00	
	T5791, US 192, Brevard Co	$5,374,095.14	$1,264,086.53	$4,110,008.61	$150,000.00	
	E57B7, SR 501, Brevard Co	$13,078,909.55	$2,661,014.82	$10,417,894.73	$300,000.00	
	T5809, SR 11, Flagler Co	$19,059,006.92	$2,345,254.00	$16,713,752.92	$900,000.00	
	T5824, SR 46, Seminole Co	$16,711,370.19	$5,133,545.00	$11,577,825.19	$500,000.00	
	E57B2, SR 46, Seminole Co	$5,768,392.74	$1,000,000.00	$4,768,392.74	$807,500.00	
	T5841, SR 401, Brevard Co	$5,577,919.09	$1,600,000.00	$3,977,919.09	$3,500,000.00	
	T5838, US 441, Orange Co	$7,714,913.47	$1,083,500.00	$6,631,413.47	$6,631,413.47	
	E8V62, SR 417 Resurf, Seminole Co	$17,398,818.51	$0.00	$17,398,818.51	$17,398,818.51	
	E53F1, SR 404, Brevard Co	$10,698,155.67	$0.00	$10,698,155.67	$10,698,155.67	
	T5842, SR 600, Volusia Co (Sub to Carr)	$668,781.34	$0.00	$668,781.34	$668,781.34	
			DOT WORK	$101,844,967.31		
				(Col. 5 Subtotal)	$41,604,668.99	
CLASSES OF WORK	**OTHER (Non-DOT) PROJECTS, OWNER, AND LOCATION OF WORK YOU ARE PERFORMING**	CONTRACT (OR SUBCONTRACT) AMOUNT	AMOUNT SUBLET TO OTHERS	BALANCE OF CONTRACT AMOUNT		
	Volusia County - Turnbull Bay	$3,510,615.07	$490,049.63	$3,020,565.44	$11,650.00	
	City of New Smyrna Beach - Airport Taxiway Improv	$4,847,128.64	$1,744,948.75	$3,102,179.89	$2,100,000.00	
	Seminole County - Oxford Road Improv	$40,065,087.29	$9,571,091.31	$30,493,995.98	$23,000,000.00	
	Volusia County - Countywide Resurfacing	$5,580,301.02	$200,000.00	$5,380,301.02	$1,550,000.00	
	City of Casselberry - Road Rehab	$2,998,077.02	$200,000.00	$2,798,077.02	$2,200,000.00	
	City of New Smyrna Beach - N. Atlantic Ave Drainage	$1,570,607.59	$0.00	$1,570,607.59	$1,570,607.00	
	City of New Smyrna Beach Utilities - N. Atlantic Ave	$1,385,488.15	$0.00	$1,385,488.15	$1,385,488.00	
			OTHER WORK	$47,751,215.09		
				(Col. 5 Subtotal)	$31,817,745.00	
PLEASE ENTER ATTACHMENT TOTALS ON THIS LINE						
				TOTAL UNCOMPLETED WORK ON HAND TO BE DONE BY YOU	$73,422,413.99	
				GRAND TOTAL		

NOTE: Columns 3 and 4 to show total contract (or subcontract) amounts. Column 5 to be difference between columns 3 and 4. Amount in columns 6 or 7 to be uncompleted portion of amount in column 5. All amounts to be shown to nearest $100.00. The Contractor may consolidate and list as a single item all contracts which individually do not exceed 3% of the total, and which, in the aggregate, amount to less than 20% of the total.

Total of Columns 6 and 7 Must Be Filled In and Must Agree with Related Attachment(s), if furnished.

MASCI
General Contractor

Richard Sanchez
Superintendent

Education and Certifications

- Advanced Maintenance of Traffic Certified
- OSHA Certified

Richard "Richie" Sanchez has over 40 years of experience in project supervising. He is skilled in all aspects of roadway construction. Richie has managed numerous projects and his experience ranges from large government capital improvement projects to private development projects. He continuously demonstrates the drive and skill to complete projects both on time and within budget.

EXPERIENCE

2015 – Present	Superintendent	Masci General Contractor, Inc.	Port Orange, FL

Recent Projects Completed:

$	8,940,784	Central Beach Phase III Flood Mitigation Improvements	City of New Smyrna Beach
$	1,019,727	Roosevelt Avenue	Satellite Beach
$	11,252,308	Howland Boulevard Widening	Deltona
$	2,178,372	Ft. Smith Boulevard, Section 4B	Deltona
$	213,475	Herbert St. @ Clyde Morris	Port Orange

MASCI
General Contractor

Luis Beitia
Pipe Superintendent

Education and Certifications

- Advanced Maintenance of Traffic Certified
- OSHA Certified

Luis Beitia has over 45 years of experience in project supervising. He is skilled in all aspects of underground utilities including, water, sewer, force main, reclaimed water and drainage structures installation. Luis has managed numerous projects and his experience ranges from large government capital improvement projects to private development projects. He continuously demonstrates the drive and skill of completing projects both on time and within budget.

EXPERIENCE

2008 – Present Superintendent Masci General Contractor, Inc. Port Orange, FL

Recent Projects Completed:

$	8,940,784	Central Beach Phase III Flood Mitigation Improvements	City of New Smyrna Beach
$	2,901,022	Atlantic Ave Sidewalk	Ponce Inlet
$	1,124,704	FDOT #E5W88, SR 426 (Aloma Ave), Orange County	Winter Park
$	1,019,727	Roosevelt Avenue	Satellite Beach
$	860,550	FDOT #T5541, SR 406 (Garden St), Brevard County	Titusville
$	1,837,115	FDOT #T5545, SR 40, Marion County	Ocala
$	501,311	Turnbull Bay Bridge Utilities	New Smyrna Beach
$	11,252,308	Howland Boulevard Widening	Deltona
$	2,178,372	Ft Smith Boulevard, Section 4B	Deltona

Leonard Witkowski
Project Manager

2012 to Present Masci Corporation
Project Manager

417 Widening Project Curry Ford Road to Lake Underhill 3/2014 to Present Project Manager
Drainage improvements and widening of 4 bridges with adding lanes.
CEI: Jon Gibson

Wickham Road Melbourne Fl. 5/2012 to 12/2013 Project Superintendent
Widen road with drainage, sidewalk, curbs and signalization
For Brevard County with Bruce Auchter

2005 to 2010 APAC Southeast Inc.
Project Manager

Jobs Worked On

FDOT SR 507 & SR 5 5/2009 to 11/2009 Project Manager
Mill and Resurface with reconstruction of handicap ramps.
For Florida Department of Transportation with Kim Navarro Project Administrator

FDOT SR 518 & SR 5 1/2009 to 6/2009 Project Manager
Mill and Resurface with handicap ramps, drainage improvements and signalization.
For Florida Department of Transportation with Robert Martens Project Administrator

Micco Road Sidewalk & Intersection Improvement 6/2007 to 1/2009 Project Superintendent
Reconstructed 2 miles of road with new turn lanes, drainage improvements, curb and 2 miles of sidewalk with Jesse Forst P.E. with RS&H
For Brevard County with Bruce Auchter and Matt Currier lead inspector.

Viera Overpass over I 95 8/2006 to 1/2008 Project Superintendent
Built bridge over I 95 with 2 miles of 4 lane road including drainage, sidewalk, curbs and new signalization.
Contracted with The Viera Company with Mary Ellen McKibben, Project Director.
Constructed with Parsons Engineering Bryan Rerko P.E. Senior Project Engineer.

Edward White Patrick Air Force Base 4/2006 to 8/2006 Project Superintendent
Reconstructed road with drainage improvement and sidewalk.
Working under Sherri Richardson with lead inspector Paul Johnson.

Patrick Air Force Base Medical Clinic 11/2005 to 8/2006 Project Superintendent
Reconstruct parking lot with new curb, sidewalk and pavement for PAFB under the IDIQ contract.
Working under Sherri Richardson Contracting Officer for 45 CONS/LGCA

Experience

Operating Heavy Equipment, All Types
Scheduling Subcontractors and Employees
Customer Relations with Engineers, Department of Transportation, County, City and Federal Employees.
Checking Jobs to meet Standard Specification.
Job Related Accounting

Education

1975 to 1979 Lancaster Central High School / Majors: Math, History and Mechanical Drawing
1979 to 1982 Erie Community College / Major: Business Management and Accounting

Certifications

ATSSA Traffic Control Supervisor
Competent Person
Storm water Certified Inspector
CTQP Asphalt Paving Level I and II

MASCI
General Contractor

Leonel A. Masci, P.E.
President / C.E.O.

Education and Certifications

- Bachelor of Science in Civil Engineering University of Massachusetts at Lowell (1994)
- State of Florida General Contractor
- Professional Engineer, Lic. No.: 68418
- State of Florida Underground Utility Contractor
- Certified by Boston Water & Sewer Commission
- Hydraulics License
- Florida Engineering Society
- OSHA Certified

Leonel A. Masci, P.E. has over 30 years of experience in the construction industry as a project manager and as a general contractor on numerous government and private construction projects. His experience in the construction industry is founded through both his invested time in construction as well as formal his formal education and licensure as a Professional Engineer. Mr. Masci embodies the Design/Build future of the construction industry and brings this talent to the client's projects he represents.

RELEVANT EXPERIENCE

Design/Build Contractor, Rymfire Drive Multi-Use Path, Palm Coast, FL: Design of a 2,400-ft long multi use path which includes a 120-ft pedestrian bridge system to cross a drainage canal. This project is a joint venture between the City of Palm Coast and FDOT-5. Responsibilities include design, permitting, project management, and construction.

Project Manager, Williamson Blvd. Widening, Volusia County, FL: General Contractor for the widening of Williamson Blvd from two lanes to four. Project include the installation of 5,400-ft of concrete sidewalk with ADA curb ramps and signage and marking.

Project Manager, Exercise Trail, St. Johns County School Board, FL: Responsible for the construction of a three,¼-mile track systems at various school sites. Project involves the coordination of construction to be conducted when no classes are being held and a precise timeline for completion prior to the start of the school year.

Project Manager, Lehigh Rail Trail, Flagler County, FL: Installation of 4.5 miles of trails for walking and bicycling. This project included the construction of 10-ft wide concrete path including a 1,000-ft elevated boardwalk over wetlands.

Project Manager, Spring to Spring, Volusia County, FL: Construction of 2.5 miles of concrete multi-use trail. This project required significant routing of the concrete trail to minimize impact to numerous significant and historic trees along the route.

Project Manager, Spruce Creek Road Utility and Sidewalk Improvements, City of Port Orange, FL: General Contractor for the installation of a force main system, sanitary sewer utilities and drainage structures. In addition, this project included the construction of 7,900-ft of 8' concrete sidewalk.

Project Manager, Saxon Dr Sidewalk A1A to Schoolway Ave., Volusia County, FL: Responsible for the construction of 5,000-ft of concrete sidewalk.

MASCI
General Contractor

David Jewett
Project Manager

Education and Certifications

- Civil Engineering – Pennsylvania College of Technology, 2016
- Maintenance of Traffic Advanced Certified
- Asphalt Mix Design Certified
- Asphalt Paving Level 1 & 2 Certified
- Asphalt Plant Level 1 & 2 Certified
- Quality Control Management Certified

David Jewett has nine years experience in project management. He is skilled in all aspects of asphalt manufacturing and paving. David has managed numerous projects and his experience ranges from asphalt paving to water/wastewater projects in municipal, federal, and private sectors. He continuously demonstrates the drive and skill of completing projects both on time and within budget.

EXPERIENCE

2016 – Present - Masci General Contractor, Inc. – Project Manager

T5636, I-95 Resurfacing, Florida Department of Transportation
Project consisted of milling 1,398,772 square yards at varied depths, laying 213,318 tons of asphalt from N of Palm Coast Pkwy to Flagler/St. Johns County line in Flagler County, permanent pavement markings, signs and signalization improvements.

T5681, I-4 Resurfacing Westbound 17/92 to Lake Mary Blvd, Florida Department of Transportation
Project consisted of milling 224,886 square yards at varied depths, laying 33,993 tons of asphalt 33,993 tons of asphalt from W of Lake Mary Blvd. to the Seminole/Volusia County line, permanent pavement markings, signs and signalization improvements.

2020 Resurfacing, City of Palm Coast
Project consisted of milling 195,231 square yards, laying 18,336 tons of asphalt on residential roads throughout Palm Coast, permanent pavement markings, reflective pavement markers, 50 manhole adjustments and 37 water valve adjustments.

David E. Hinson

Foreman – Concrete Crew

David E. Hinson has over 20 years of experience in the Construction industry as a supervisor on numerous government and private construction projects. He has been responsible for managing concrete construction crews in concrete structure work such as bridges, conspan bridges, bridge decks, concrete chlorine chamber, DOT Cast in Place Box Culvert and retaining walls. David is also proficient in concrete flatwork such as curb, sidewalk, traffic separators and concrete repair work.

RELEVANT EXPERIENCE

2011 – Present Concrete Foreman Masci General Contractor, Inc. Port Orange, FL

Projects Completed:

- Eustis, FL – Retaining Wall
- Palatka, FL – Constructed New Chlorine Chamber for Water Treatment Plant
- Lake Mary, FL – Retaining Wall
- Palm Bay, FL – Poured in Place Box Culvert
- Cocoa Beach, FL- Poured in Place Box Culvert
- Ormond Beach, FL – Wing Walls/ Head Walls/ Cast in Place Box Culvert
- Port Orange, FL – Poured in Place Retaining Wall for Water Treatment Plant

2006-2010 – Concrete Foreman Westwind Contracting Pembroke Park, FL

2003-2006 – Concrete Crew Leader Yelvington Construction Pierson, FL

MASCI
General Contractor

Chris Wright
Project Manager

Education and Certifications

- Bachelor of Science – Ball State University, Indiana 2003
- Maintenance of Traffic Certified
- OSHA Certified

Chris Wright has 17 years experience in project management. He is skilled in all aspects of sales, underground utilities including, water, sewer, force main, reclaimed water and drainage structures installation. Chris has supervised numerous projects and his experience ranges from large government capital improvement programs to private development projects. He continuously demonstrates the drive and skill of completing projects both on time and within budget.

EXPERIENCE

2010 – Present - Masci General Contractor, Inc. – Project Manager

Isleboro Subdivision Stormwater Improvements Project (New Smyrna Beach)
Project consisted of 25,000 LF of new storm water pipe improvements, 17,000 LF of potable water, 2,000 LF of sanitary improvements and 3,000 LF of wastewater expansion upgrades. Additional improvements on this project included construction/excavation of 2 ponds, milling and overlaying of 16,000 SY of roadway, 22,000 SY of new roadway on existing shell roads, 35,000 LF of new curbing and 7,100 SY of removal & replacement of new driveways.

Reclaimed Water Main Extension - Phases I, II & III (City of Edgewater)
Project consisted of 10,700 LF of PVC reclaimed water main, 9,000 LF of HDPE directionally drilled reclaimed water main, 16" water main, curb and gutters, sidewalks, asphalt removal/replacement and construction/excavation of a large retention pond.

T5660 - A1A (Satellite Beach to Indialantic - FDOT)
Project consisted of drainage improvements including 1,200 LF of new drainage pipe, 80 new manholes, ditch bottom and curb inlets. Intersection upgrades that included 18 new signal mast arms, 75 new pedestrian signals, pull boxes, conduits, etc. Asphalt improvements included milling and paving this 9 mile stretch of 5 lane highway - 341,200 SY of milling and 38,200 TN of new asphalt.

EJCDC Exhibit No. 3

ITB 25 - 13
439865-3-54-01 SJR2C Loop Trail (Spruce Creek Rd.) from South of Selin Circle to Herbert Street

on file with Office of the City Clerk

Consisting of 183 pages

CITY OF PORT ORANGE, FLORIDA

INVITATION TO BID
ITB #25-13
439865-3-54-01 SJR2C Loop Trail (Spruce Creek Rd.) From South of Selin Circle to Herbert Street

City of Port Orange Purchasing Division
Prepared by: Jill Poolman, NIGP-CPP, CPPO, CPPB
Release Date: May 30, 2025

Bid Due Date & Time: July 2, 2025 @2:30 PM

City of Port Orange, Florida
1000 City Center Circle, Port Orange, FL 32129
(386) 506-5718
purchdiv@port-orange.org; www.port-orange.org

Legal Notice to Proposers

ITB #25-13

439865-3-54-01 SJR2C Loop Trail (Spruce Creek Rd.) From South of Selin Circle to Herbert Street

Notice is hereby given that the City of Port Orange is soliciting bids for **ITB #25-13 439865-3-54-01 SJR2C Loop Trail (Spruce Creek Rd.) From South of Selin Circle to Herbert Street.** Bids will be accepted in the City Clerk's office, Port Orange City Hall, 1000 City Center Circle, Port Orange, Florida 32129 until **2:30 PM Eastern Standard Time (EST) on July 2, 2025** which may be amended by addendum issued by the City. All untimely bids will not be considered and will be returned to the bidder unopened. All bids will be evaluated to ensure they contain all required forms in order to deem the bidder responsive or non-responsive. **Bids will be opened and read aloud at 2:30 PM EST in Council Chambers.**

There will be a mandatory Pre-Bid Conference and site visit for the project at **10:00 AM EST** on **June 6, 2025** at City Hall, Council Chambers (1st floor), 1000 City Center Circle, Port Orange, FL 32129. **All prospective Bidders must attend the meeting and site visit. Only Bidders attending the mandatory Pre-Bid Conference and site visit will be eligible to submit a Bid.** All attendees to the mandatory Pre-Bid Conference and site visit must sign in. The representative of each Bidder shall be an authorized employee of the Bidder and MUST sign in accordingly. Bidders are urged to obtain bid documents and familiarize themselves with the documents prior to the Pre-Bid Conference.

A Bid Guarantee in the form of a Bid Bond executed by the bidder and an acceptable surety or a certified check or bank draft payable to the City of Port Orange, Florida in an amount equal to five percent (5%) of the proposed bid must be submitted with each bid. If awarded, the Bidder must be able to obtain both payment and performance bonds equal to one hundred percent (100%) of project value from a surety company licensed in Florida and must submit proof of their present bonding capacity with their submitted bid package in the form of a current (not older than 3 months) letter from bidder's bonding agent. Bidder's failure to include the bonding capacity letter with bid package may result in rejection of bidder's submittal.

DESCRIPTION: The SJR2C Loop Trail (Spruce Creek Rd) project is within the City of Port Orange. The project is a Shared use path (SUNTrail) from south of Selin Circle to Herbert Street. This segment, of the much larger trail system, begins south of the intersection of Spruce Creek Road and Selin Circle. The 8-foot-wide concrete trail of 240 linear feet will extend northerly along the west side of Spruce Creek Road towards Oak Street utilizing a portion of the existing 8 feet concrete sidewalk and will continue along the east side of Halifax Canal from Oak Street to Dunlawton Avenue utilizing the existing 8-foot-wide trail for 1,190 linear feet. 986 linear feet of 12-foot-wide heavy-duty asphalt trail will then continue along Spruce Creek Road from Dunlawton Avenue to Canal View Boulevard. 715 linear feet of 8-foot boardwalk continues through a vacant city-owned parcel from Canal View Boulevard to 120 feet South of Herbert Street. The last segment will be 120 linear feet of 8-foot-wide concrete sidewalk connecting to the existing trail segment. Total project length is approximately 0.671 miles.

The project is funded by Shared-Use Nonmotorized (SUN) Trail Program, Florida Department of Transportation through State Funded Grant Agreement. Prime contractor is to be prequalified in the work class: Sidewalk and Flexible Pavement. There shall be no preference given to Bidders regarding the location of the physical address of the Bidder's place of business.

Bidders must be a commercial entity licensed to do business in the State of Florida and perform the services identified herein. Bidders must be properly registered and licensed to provide the services identified in the scope of work by all applicable state and local agencies.

All bids are solicited and shall be made pursuant to the Code of Ordinances, City of Port Orange, Chapter 2, Article VI, Division 2, Section 2-263, and all bids will be evaluated in accordance with Chapter 2, Article VI, Division 2, Section 2-266. Code of Ordinances, City of Port Orange is on file in the Office of the City Clerk, City Hall, 1000 City Center Circle, Port Orange, Florida 32129 and at www.municode.com .

Copies of the bid documents, requirements, scope of service and all other pertinent information necessary to submit a complete package may be obtained electronically from the City of Port Orange Purchasing web page at www.port-orange.org/bids.aspx and DemandStar via their website at www.demandstar.com.

All questions shall be directed **in writing** to Jill Poolman, Purchasing Manager @jpoolman@port-orange.org and purchdiv@port-orange.org and reference "Questions on **ITB #25-13 - 439865-3-54-01 SJR2C Loop Trail (Spruce Creek Rd.) From South of Selin Circle to Herbert Street.**" in the subject line. **Last day for questions will be June 13, 2025 by 5:00 PM EST.**

The Cone of Silence begins with the issuance of the solicitation document and continues until City Council meets to make a final decision on an award. During this time bidders, suppliers, contractors and sub-contractors are prohibited from all communications regarding the solicitation with City staff, City consultants, City legal counsel, City agents, or elected officials. Any bidder who initiates any discussions or attempts to influence a member or members of the aforementioned shall be disqualified from continued participation in the procurement process with regard to that particular solicitation. While the Cone of Silence is in effect, all communications from potential bidders, suppliers, contractors and sub-contractors must be directed to the Purchasing Division @purchdiv@port-orange.org .

Cut along the outer border and affix this label to the outside of your sealed bid envelope/package to identify it as a "Sealed Bid". Be sure to include the name of the company submitting the bid where requested.

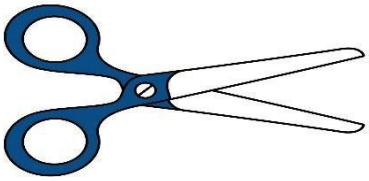

SEALED BID – DO NOT OPEN

SEALED BID NO.: **ITB #25-13**

BID TITLE: **439865-3-54-01 SJR2C Loop Trail (Spruce Creek Rd.) From South of Selin Circle to Herbert Street**

DUE DATE/TIME: **JULY 2, 2025 BY 2:30 PM EST**

SUBMITTED BY: _____
(Name of Company)

BIDDER'S ADDRESS: _____

_____

DELIVER TO: **CITY OF PORT ORANGE CITY CLERK'S OFFICE**
ATTN: JILL POOLMAN, NIGP-CPP, CPPO, CPPB
PURCHASING DIVISION
1000 CITY CENTER CIRCLE
PORT ORANGE, FL 32129

DATE/TIME RECEIVED:_____
(To be stamped by Clerk's Office)

Contents

SECTION 1 – PURPOSE AND OVERVIEW 5
SECTION 2 – INSTRUCTIONS TO BIDDERS 5
SECTION 3 – SCOPE OF WORK 8
SECTION 4 – STANDARD PURCHASE DEFINITIONS 9
SECTION 5 – GENERAL TERMS AND CONDITIONS 12
SECTION 6 – SPECIAL REQUIREMENTS/INSTRUCTIONS 30
SECTION 7 – REQUIRED FORMS 33
FORM 7.1 – BID SUBMITTAL CHECKLIST 33
FORM 7.2 – BIDDER'S ACKNOWLEDGEMENT FORM 34
FORM 7.3 – ADDENDUM AND CHANGE ORDER PROCEDURE ACKNOWLEDGEMENT 35
FORM 7.4 – DRUG-FREE PREFERENCE STATEMENT 36
FORM 7.5 – SWORN STATEMENT ON PUBLIC ENTITY CRIMES 37
FORM 7.6 – STATEMENT OF BIDDER'S QUALIFICATIONS 38
FORM 7.7 – PROFESSIONAL REFERENCES FOR PREVIOUS EXPERIENCE 39
FORM 7.8 – LISTING OF SUBCONTRACTORS 41
FORM 7.9 – SCRUTINIZED COMPANIES CERTIFICATION 42
FORM 7.10 – E-VERIFY AFFIDAVIT 43
FORM 7.11 – AFFIDAVIT OF COMPLIANCE WITH SECTION 287.138, FLORIDA STATUTES 44
FORM 7.12 – NO SUBMITTAL RESPONSE FORM 45
(ATTACHMENT 1) – SCHEDULE OF UNIT PRICING 46
AFFIDAVIT REGARDING LABOR AND SERVICES. 48
BID BOND 49
PERFORMANCE AND PAYMENT BOND (for informational purposes only) 51
LEASED EMPLOYEE AFFIDAVIT (for informational purposes only) 53
AFFIDAVIT REGARDING WORKERS' COMPENSATION (for informational purposes only) 54
CITY OF PORT ORANGE CONTRACT DOCUMENTS (for informational purposes only) 55

EXHIBIT 1 - SPECIFICATIONS 145
EXHIBIT 2 - ENVIRONMENTAL PERMITS 152

SECTION 1 – PURPOSE AND OVERVIEW

The purpose of this Invitation to Bid (ITB) is to solicit competitive sealed bids from Firms or Companies (Bidders) for constructing shared use path (SUNTrail) from south of Selin Circle to Herbert Street. This segment, of the much larger trail system, begins south of the intersection of Spruce Creek Road and Selin Circle. The 8-foot-wide concrete trail of 240 linear feet will extend northerly along the west side of Spruce Creek Road towards Oak Street utilizing a portion of the existing 8 feet concrete sidewalk and will continue along the east side of Halifax Canal from Oak Street to Dunlawton Avenue utilizing the existing 8-foot-wide trail for 1,190 linear feet. 986 linear feet of 12-foot-wide heavy-duty asphalt trail will then continue along Spruce Creek Road from Dunlawton Avenue to Canal View Boulevard. 715 linear feet of 8-foot boardwalk continues through a vacant city-owned parcel from Canal View Boulevard to 120 feet South of Herbert Street. The last segment will be 120 linear feet of 8-foot-wide concrete sidewalk connecting to the existing trail segment. Total project length is approximately 0.671 miles.

It is the intent and purpose of the City of Port Orange (City) that this Invitation to Bid promotes competitive selection. It shall be the Bidder's responsibility to advise the Purchasing Division of any language, requirements, etc. or any combination thereof that inadvertently restricts or limits the requirements stated in this ITB to a single source.

READ THIS ENTIRE DOCUMENT CAREFULLY. FOLLOW ALL INSTRUCTIONS. YOU ARE RESPONSIBLE FOR FULFILLING ALL REQUIREMENTS AND SPECIFICATIONS. BE SURE YOU UNDERSTAND THEM.

SECTION 2 – INSTRUCTIONS TO BIDDERS

Bidders desiring to provide services, as described herein shall submit sealed bids, including one (1) original and one (1) digital (flash drive) version in PDF format, in conformance with the detailed submittal instructions.

TIMELINE (Eastern Standard Time)

The City reserves the right to alter dates as needed.

DESCRIPTION	DATE
Date of Distribution	May 30, 2025
Mandatory Pre-Bid Conference	June 6, 2025 @10:00 AM
Deadline for Questions	June 13, 2025 by 5:00 PM
Addendum Posting (If needed)	June 20, 2025
Bids Due	July 2, 2025 by 2:30 PM
City Council Meeting for Approval of Recommendation of Award	To Be Determined

Bids must be delivered in a sealed envelope/package and delivered to:

City of Port Orange City Clerk's Office
Attn: Jill Poolman, NIGP-CPP, CPPO, CPPB
Purchasing Division
1000 City Center Circle
Port Orange, FL 32129

Sealed bids must be delivered no later than the date and time listed in the Timeline above. All times referenced are local time. Bids shall be sealed and bidders shall clearly indicate on the outside of their bid the following:

a. Invitation to Bid (ITB) Number and Title
b. Date of Opening
c. Name of Bidder
d. Address of Bidder

Due to the timing of mail service, the City cautions bidders to ensure actual delivery of bids to the City prior to the deadline set for receiving bids. Carrier and hand deliveries of bids will be accepted in the City Clerk's Office, Port Orange City Hall, 1000 City Center Circle, Port Orange, Florida 32129 until the date and time referenced in the Timeline above or as amended by addendum issued by the City. Bids received after the established deadline shall not be considered.

Bidders are cautioned that they are responsible for delivery to the specific location cited above. Therefore, if your bid, proposal, statement or quotation is delivered by an express mail carrier or by any other means, it is your responsibility to ensure delivery to the above address. The City will not be responsible for deliveries made to any place other than the specified address.

Offers by telephone or email shall not be accepted. Also, bidders are instructed NOT to fax their bid package. **Faxed bids will be rejected as non-responsive regardless of where or when the fax is received.**

All bids will be opened publicly, and the names of all bidders shall be read aloud. All conferences and meetings regarding this ITB are recorded electronically (audio only). The City of Port Orange reserves the right to reject any or all bids or parts of bids if it is in the best interest of the City.

PRE-BID CONFERENCE

There will be a mandatory Pre-Bid Conference and site visit on the date and time referenced in the Timeline above at City Hall, Council Chambers (1st Floor), 1000 City Center Circle, Port Orange, Florida 32129. **All prospective Bidders must attend the meeting and site visit. Only Bidders attending the mandatory Pre-Bid Conference and site visit will be eligible to submit a Bid.** All attendees to the mandatory Pre-Bid Conference and site visit MUST sign in. The representative of each Bidder shall be an authorized employee of the Bidder and must sign in accordingly.

QUESTIONS

All questions shall reference **"ITB #25-08 - 439865-3-54-01 SJR2C Loop Trail (Spruce Creek Rd.) From South of Selin Circle to Herbert Street"** in the subject line. All questions concerning this ITB shall be submitted in writing no later than the date and time referenced in the Timeline above to:

Jill Poolman, Purchasing Manager
1000 City Center Circle
Port Orange, FL 32129
jpoolman@port-orange.org and
purchdiv@port-orange.org

ADDENDA

The City will issue responses to inquiries and any other corrections or amendments it deems necessary in written addenda issued prior to the bid due date. Bidders should not rely on any representations, statements or explanations other than those made in this ITB or in any addendum to this ITB. Where there appears to be a conflict between the ITB and any addenda issued, the last addendum issued will prevail. The bidder should verify prior to submitting a bid that all addenda have been received. Bidders should acknowledge the correct number of addenda received as part of their bids. All addenda will be published on the City Purchasing web page at www.port-orange.org/bids.aspx and the DemandStar website at www.demandstar.com.

The City of Port Orange reserves the right to consider the omission of an acknowledgment of addendum as cause for rejection of the ITB submittal.

This provision exists solely for the convenience and administrative efficiency of the City of Port Orange. No bidder or other third party gains any rights by virtue of this provision or the application thereof, nor shall any bidder or third party have any standing to sue or cause of action arising therefrom.

CLARIFICATIONS

It is the bidder's responsibility to become familiar with and fully informed regarding the terms, conditions and specifications of this ITB. Lack of understanding and/or misinterpretation of any portions of this ITB shall not be cause for withdrawal of your bid after opening or for subsequent protest of award.

MINIMUM QUALIFICATIONS

Bidders shall be licensed to do business in the State of Florida. Submit Sunbiz report showing your company registered as "Active".

Prime contractor is to be prequalified in the work class: Sidewalk and Flexible Paving.

Bidders must provide a minimum of three (3) verifiable references from similar scopes of work as identified in this ITB on the provided "Professional References" form. Failure to provide verifiable references may cause the bidder to be deemed non-responsive. **The City of Port Orange is not to be used as a reference.**

NO LOBBYING

All bidders are hereby placed on notice that the City of Port Orange Council, City Employees/Staff, nor Members of the Evaluation Committee (with the exception of the City of Port Orange Purchasing Division personnel designated to receive requests for interpretations or corrections) are not to be lobbied, directly or indirectly either individually or collectively, regarding this ITB. During the entire procurement process, all bidders and their subcontractors, sub-consultants, or agents are hereby placed on notice that they are not to contact any persons listed above for such purposes as holding meetings of introduction, dinners, etc. if they intend to submit or have submitted Bids for this project. Any bidder contacting individuals mentioned herein in violation of this warning may automatically be disqualified from further consideration for this ITB.

SCHEDULE OF UNIT PRICING

Schedule of Unit Pricing is to be completed as directed and without modification and returned as part of the ITB submittal prior to the ITB deadline for submission. Failure to fill out the Schedule of Unit Pricing as directed and without modification may negatively affect the evaluation of your bid. If the City has a need to revise the Schedule of Unit Pricing prior to the bid submittal deadline, it will do so in a published addendum. If the City does revise the Schedule of Unit Pricing, bidders **must** complete and return the City issued revised version of the Schedule of Unit Pricing. If bidder does NOT complete and return the City issued revised version of the Schedule of Unit Pricing their bid submittal will be deemed non-responsive.

EXCEPTIONS TO SPECIFICATIONS

If taking exception to any portion of the ITB specifications, the bidder must indicate those exceptions as stated on the Bidder's Acknowledgement Form (7.2).

BID SUBMISSION AND WITHDRAWAL

Unless otherwise specified, bidder shall use the forms supplied by the Purchasing Division. Bids, once opened, become the property of the City, cannot be withdrawn, and will not be returned to the bidders. Upon opening, bids become subject to public disclosure in accordance with Chapter 119, Florida Statutes.

CORRECTION OF BIDS

Correction of inadvertently erroneous bids shall be permitted up to the time of ITB opening. Bidders shall not be allowed to modify their bids after the opening time and date.

WITHDRAWAL OF BIDS

NO bid shall be withdrawn for a period of one-hundred-twenty (120) days subsequent to the bid opening without the consent of the City of Port Orange. Negligence on the part of the bidder in preparing their bid confers no right of withdrawal or modification after the bid has been opened at the appointed time and place by the City of Port Orange. Any such withdrawn bid shall not be resubmitted.

OPENING OF BIDS

Bids will be received until the date and time stated in this ITB and will be publicly opened and read at the place, time and date stated. The City bears no responsibility for the premature opening of a bid not properly addressed and identified.

LITIGATION HISTORY

The City will consider a bidder's litigation history information in its review and determination of responsibility. All bidders are required to disclose to the City all "material" cases filed, pending, or resolved during the last five (5) years prior to the solicitation response due date, whether such cases were brought by or against the bidder, any parent or subsidiary of the bidder, or any predecessor organization. If the bidder is a joint venture, the information provided should encompass the joint venture (if it is not newly formed for purposes of responding to the solicitation) and each of the entities forming the joint venture. Although the review of a bidder's litigation history is an issue of responsibility, the failure to provide litigation history as required in the Evaluation Criteria may result in a recommendation of non-responsive by the Purchasing Manager.

DEBARMENT HISTORY

The City will consider a bidder's debarment history information in its review and determination of responsibility. All bidders are required to disclose to the City all cases of debarment filed, pending, or resolved by the City or other public entity during the last five (5) years prior to the solicitation response due date, whether such actions were brought by or against the bidder, any parent or subsidiary of the bidder, or any predecessor organization. If the bidder is a joint venture, the information provided should encompass the joint venture (if it is not newly formed for purposes of responding to the solicitation) and each of the entities forming the joint venture. Although the review of a bidder's debarment history is an issue of responsibility, the failure to provide debarment history as required on the Certification Regarding Debarment, Suspension and Other Responsibility (contained herein) may result in a recommendation of non-responsive by the Purchasing Manager.

REJECTION OF BIDS

The City reserves the right to reject any and/or all bids when such rejection is in the best interest of the City.

BIDS MAY BE REJECTED AND/OR BIDDER(S) DISQUALIFIED FOR THE FOLLOWING REASONS:

(a) Failure to update the information on file including address, product, service or business descriptions.
(b) Failure to perform according to contract provisions.
(c) Conviction in a court of law of any criminal offense in connection with the conducting of business.
(d) Evidence of a violation of any federal or state antitrust law based on the submission of bids or proposals, or the awarding of contracts.
(e) Evidence that the bidder has attempted to give a City employee a gratuity of any kind for the purpose of influencing a recommendation or decision in connection with any part of the City's purchasing activity.
(f) Other reasons deemed appropriate by the City.

OWNERSHIP OF DOCUMENTS

All documents resulting from this solicitation will become the sole property of the City of Port Orange. The bidder must meet all requirements for retaining public records and transfer, at no cost, to the City all public records in the possession of the Bidder upon termination of this Agreement and destroy any duplicate public records that are exempt or confidential and exempt from public records disclosure requirements. All records stored electronically must be provided to the City in a format that is compatible with the information technology systems of the City.

AMERICANS WITH DISABILITIES ACT (ADA)

If you need special services provided under the Americans with Disabilities Act, contact the ADA Coordinator in our Human Resources office at 386-506-5560 at least 48 hours before the scheduled event.

REQUIRED DOCUMENTS FOR AWARDED BIDDER

The awarded bidder shall return all the required post-award documents within 10 days after the issuance of the Notice of Intent to Award in order to execute the contract.

SECTION 3 – SCOPE OF WORK

CONTRACT TERM/COMPLETION TIME

The date of commencement of the Work shall be fixed in a notice to proceed issued by the City. The contractor shall achieve Substantial Completion of the Work not later than two hundred forty-six **(246)** calendar days from the notice to proceed and Final Completion two hundred seventy **(270)** calendar days from the notice to proceed.

SCOPE OF WORK

For additional information regarding the scope of work, please refer to the following files that are posted as separate documents:

- Timber Boardwalk Structural Design Calculations
- SJR2C Loop Trail (Spruce Creek Rd.) Plans
- SJR2C Loop Trail (Spruce Creek Rd.) Lighting Plans

The SJR2C Loop Trail (Spruce Creek Rd) project is within the City of Port Orange. The project is a Shared use path (SUNTrail) from south of Selin Circle to Herbert Street. This segment, of the much larger trail system, begins south of the intersection of Spruce Creek Road and Selin Circle. The 8-foot-wide concrete trail of 240 linear feet will extend

northerly along the west side of Spruce Creek Road towards Oak Street utilizing a portion of the existing 8 feet concrete sidewalk and will continue along the east side of Halifax Canal from Oak Street to Dunlawton Avenue utilizing the existing 8-foot-wide trail for 1,190 linear feet. 986 linear feet of 12-foot-wide heavy-duty asphalt trail will then continue along Spruce Creek Road from Dunlawton Avenue to Canal View Boulevard. 715 linear feet of 8-foot boardwalk continues through a vacant city-owned parcel from Canal View Boulevard to 120 feet South of Herbert Street. The last segment will be 120 linear feet of 8-foot-wide concrete sidewalk connecting to the existing trail segment. Total project length is approximately 0.671 miles.

The selected qualified Contractor will be responsible for the construction of:

- 8-foot-wide concrete trail of 240 linear feet beginning south of the intersection of Spruce Creek Road and Selin Circle and extending northerly along the west side of Spruce Creek Road towards Oak Street
- 986 linear feet of 12-foot-wide heavy-duty asphalt trail along Spruce Creek Road from Dunlawton Avenue to Canal View Boulevard
- 715 linear feet of 8-foot boardwalk through a vacant city-owned parcel from Canal View Boulevard to 120 feet South of Herbert Street
- 120 linear feet of 8-foot-wide concrete sidewalk from the boardwalk to Herbert Street

Three midblock crossings at Selin Circle, Oak Street and Herbert Street will be installed with Rectangular Rapid Flashing Beacon (RRFB) signals and lighting will be added at these three locations. The scope of work will include installation of a pedestrian pole with LED countdown at the intersection of Dunlawton Avenue and Spruce Creek Road.

The timber pedestrian boardwalk and associated gravity walls will also be installed with lighting for safety purposes. Drainage improvements include extending pipes, mitered end sections, inlet modifications and installation of an inline check valve.

Other construction elements include mobilization, maintenance of traffic, erosion control, clearing and grubbing, regular and subsoil excavation, embankment (to include surcharge), and sod. Pipe handrail-guiderail is installed where drop off is greater than 5 feet.

All pedestrian facilities shall adhere to current American with Disabilities Act (ADA) standards. Utility coordination will be required during construction and utility work schedules have been developed. Environmental permitting is acquired and attached as exhibits.

Road shoulder and lane closures are anticipated. The contractor is to be responsible for execution of Temporary Traffic Control Plan (TTCP) as shown in the construction drawings and determining the need for lane closures.

SECTION 4 – STANDARD PURCHASE DEFINITIONS

The City will use the following definitions in instructions to Bidders, terms and conditions, special provisions, technical specifications and any other solicitation documents.

1. **Addendum** is a formal written document, released prior to the public opening that modifies any aspect of a Solicitation. Plural: Addenda
2. **Alternate Bid** means multiple bids with substantive variations from the same Bidder in response to a Solicitation.
3. **Amendment** is a formal written agreement, signed by both parties, that modifies an existing contractual agreement.
4. **Appropriate, Appropriated, or Appropriation** means the adoption by the City Council of the City of a budget fora fiscal year that includes payments to be made under the Contract during the respective fiscal year.
5. **Best Value** means the highest overall value to the City based on factors that include, but are not limited to, price, quality, design, and workmanship.
6. **Bid** is a complete, properly signed response to an Invitation to Bid, which if accepted, would bind the Bidder to perform the resultant Contract.
7. **Bid Guaranty (Bid Bond)** guarantees that the Bidder (a) will not withdraw the bid within the period specified for acceptance, and (b) will execute a Contract and furnish required bonds and any necessary insurance within the time specified in the Solicitation, unless a longer time is allowed by the City. The guarantee will be returned to the Bidder upon execution of a Contract

8. **Bidder or Proposer** is a person, firm, or entity that that submits a Response to a Solicitation. Any Bidder/Proposer may be represented by an agent after submitting evidence demonstrating the agent's authority. The agent cannot certify as to his own agency status.
9. **City** means the City of Port Orange.
10. **Competitive Negotiation** means a method for acquiring goods, services, and construction for public use in which discussions or negotiations may be conducted with responsible offerers who submit Responses through a Request for Proposals, Request for Statements of Qualifications, or Invitation to Negotiate.
11. **Competitive (Formal) Solicitation** is the process of requesting and receiving two or more sealed bids, proposals, statements of qualifications or replies submitted by responsive Bidders/Proposers in accordance with the terms of a competitive process, regardless of the method of procurement.
12. **Competitive Range** means the responsive submissions that meet the evaluation criteria and are considered to be reasonably susceptible of award.
13. **Construction** means the process of building, repairing, improving, and alterations, conversion or extension of building, parks, utilities, streets or other improvements or alterations to real property.
14. **Contract** is a written agreement or purchase order issued for the purchase of goods or services.
15. **Contractor** means the person, firm or entity selling goods or services to the City under a Contract.
16. **Deliverables** means the goods, products, materials, and/or services to be provided to the City by a Bidder.
17. **Due Date** means the date and time specified for receipt of Responses to a Solicitation.
18. **End User** is a person, program, agency, or other eligible user who uses a contract to purchase a commodity or contractual service.
19. **Evaluation Committee/Team** is a temporary group of City personnel who are responsible for the evaluation of proposals, statements of qualifications or replies as part of a Request for Proposals (RFP), Request for Submission of Qualifications (RFSQ), or Invitation to Negotiate (ITN), or competitive grant process.
20. **Evaluator** is a member of the evaluation committee/team.
21. **Goods** are supplies, materials, or equipment.
22. **Intent to Award** is a document, published on DemandStar, that informs the public and respondents of the City's decision to award a contract pursuant to a previously issued competitive solicitation.
23. **Invitation to Bid (ITB) or Bid** means a formal request to prospective Bidders requesting pricing for a specified Good or Service which has been advertised for bid in a newspaper.
24. **Invitation to Negotiate (ITN)** means a formal request to prospective proposers requesting proposed specifications and pricing of a product and/or service which has been advertised for replies in a newspaper.
25. **Issues** means points, matters, or concerns to be addressed during negotiations.
26. **Lead Negotiator** is the negotiator responsible for leading and facilitating the formal negotiation discussions and selecting other required negotiation team members. Is often the "driver of change" and seeks alternatives/options.
27. **Lowest Responsible Bid** means the responsive bid meeting all requirements of the specifications, terms, and conditions of the Invitation to Bid resulting in the lowest cost to the City in a total cost concept or based solely on price, taking into consideration the financial and practical ability of the Bidder to perform the Contract, past performance of the Bidder, and compliance with all City ordinances concerning the purchasing process.
28. **Lowest Responsible Bidder** means the Bidder submitting lowest responsible bid.
29. **Negotiation Team** is a temporary group of City personnel who are responsible for negotiations as part of an Invitation to Negotiate (ITN).
30. **Negotiator** is a member of the negotiation team.
31. **Non-Professional Services** are services performed that are not of a professional nature such as lawn care, security, janitorial, etc.
32. **Offer** means a complete signed Response submitted to the City in response to a Solicitation including, but not limited to, a bid submitted in response to an Invitation to Bid, a Proposal submitted in response to a Request for Proposal, a Quote submitted in response to a Request for Quotation, a Statement of Qualifications and interest submitted in response to a Request for Statements of Qualifications, or a Reply submitted in response to an Invitation to Negotiate.
33. **DemandStar** is the official online repository for all City competitive solicitations.
34. **Outlier** is a bid, offer, or proposal which is determined by the Purchasing Director or Manager to be significantly dissimilar to or inconsistent with, competing bids or offers.
35. **Pre-Bid/Proposal/Statement/Reply Conference** means a meeting conducted by the Purchasing Office, held in order to allow Bidders/Proposers to ask questions about the proposed Contract and particularly the Contract specifications with the City department requesting the goods/services.

36. **Price Analysis** is an evaluation of the total cost of a contract in order to determine if the price is reasonable.
37. **Procurement (Process)** is a term used in the governmental sector for the combined functions of acquiring (purchasing) needed goods and/or services, receiving and inspection, inventory management, contract administration, and disposal/surplus.
38. **Professional Services** means those services within the scope of the practice of architecture, professional engineering, landscape architecture, or registered surveying and mapping, as defined by the laws of the state, or those performed by any architect, professional engineer, landscape architect, or registered surveyor and mapper in connection with his or her professional employ mentor practice.
39. **Protest** is a formalized process by which respondents have an opportunity to challenge a procurement practice or contract award.
40. **Proposal** is a complete, properly signed Response to a Request for Proposal, based on performance that is offered rather than on that of price alone, which if accepted, would bind the Proposer to perform the resultant Contract.
41. **Purchase Order** is an order placed by the Purchasing Division for the purchase of Goods or Services written on the City's standard Purchase Order form and which, when accepted by the Bidder, becomes a contract. The Purchase Order is the Bidder's authority to deliver and invoice the City for Goods or Services specified, and the City's commitment to accept the Goods or Services for an agreed upon price.
42. **Request for Proposal (RFP)** means a formal request to prospective proposers requesting qualifications of the proposer and pricing for a specified Good or Service which has been advertised for Proposal in a newspaper.
43. **Request for Statement of Qualifications (RFSQ)** means a formal request to prospective proposers requesting statements of qualifications pursuant to Florida Statute 287.055 "Consultant's Competitive Negotiation Act" which has been advertised for Statement in a newspaper.
44. **Respondent** means an entity that has (or will, i.e. "prospective respondents") submitted a response to a competitive solicitation conducted to create a contractual relationship for the provision of commodities or services.
45. **Response/Submission** means all materials submitted to the City by a respondent as part of a solicitation. A response may be called a bid, proposal, statement of qualifications, or a reply, depending on the type of competitive solicitation being issued.
46. **Responsible (Bidder)** is a Bidder who has the capability in all respects to fully perform the contract requirements and the integrity and reliability that will assure good faith performance.
47. **Responsive (Bidder)** is a Bidder that has submitted a bid, proposal, statement of qualifications, or reply that conforms in all material respects to the solicitation.
48. **Scope** means the extent of the area or subject matter that something deals with or to which it is relevant.
49. **Scope of Work** means a description of the work activities, deliverables, and/or timeline that a Bidder must execute in terms of delivering specific commodities or in performance of contractual services.
50. **Services** include all work or labor performed for the City on an independent contractor basis other than construction.
51. **Solicitation** means a formal request, as applicable, for prospective Bidders/Proposers to submit responses to an Invitation to Bid, Request for Proposal, Request for Qualifications, Invitation to Negotiate, or a Request for Quotation.
52. **Solicitation Document** means a document, or collection of documents, either paper or electronic, that contains all information required to conduct a competitive procurement project according to § 287.057, Florida Statutes.
53. **Stakeholder** means an individual, who is not likely to become a supplier, who has an interest in the commodities/contractual services needed.
54. **Subcontractor** means a person, firm or entity providing goods or services to a Bidder/Proposer to be used in the performance of the Bidder/Proposer's obligations under the Contract.
55. **Subject Matter Expert** means a person who has working or expert knowledge about a particular topic or field.
56. **Unbalanced Bid** means a bid that is based on prices which are significantly less than cost for some bid items and significantly more than cost for others.

SECTION 5 – GENERAL TERMS AND CONDITIONS

These terms and conditions are standard for all contracts for commodities or services issued through the City of Port Orange Purchasing Division. These General Terms and Conditions apply to all advertised Solicitations; however, said terms and conditions **may be superseded, in whole or in part, by Section 6, SPECIAL REQUIREMENTS/ INSTRUCTIONS.**

1. **ACCEPTANCE BY CITY**

   The City shall have a reasonable time (but not less than 30 days) after receipt to inspect the goods and services tendered by the bidder. The City at its option may reject all or any portion of such goods or services which do not, in City's sole discretion, comply in every respect with all terms and conditions of the contract. The City may elect to reject the entire goods and services tendered even if only a portion thereof is nonconforming. If the City elects to accept nonconforming goods and services, the City, in addition to its other remedies, shall be entitled to deduct a reasonable amount from the price thereof to compensate the City for the nonconformity. Any acceptance by the City, even if non-conditional, shall not be deemed a waiver or settlement of any defect in such goods and services. The material delivered as a result of this solicitation shall remain the property of the seller until a physical inspection and actual usage of the item(s) is made and thereafter deemed acceptable to the satisfaction of the City, in compliance with the terms and specifications contained herein. In the event that the item(s) supplied to the City is/are found to be defective, or does/do not conform to specifications, the City reserves the right to cancel the order upon written notice to the seller and return the item(s) to the seller at the seller's expense.

2. **ADDENDA**

   When specifications are revised, the City of Port Orange Purchasing Division will issue an addendum addressing the nature of the change. Bidders must acknowledge all addenda by completing Form 7.3 *Addendum and Change Order Procedure Acknowledgement* and include it in the returned response package. Failure to acknowledge the correct number of addenda issued may result in rejection of the response. It is the responsibility of the Bidder to ensure all addenda have been received prior to submitting a bid. All addenda shall be posted by the City on DemandStar at www.demandstar.com and the City of Port Orange Purchasing web page at https://www.port-orange.org/bids.aspx. The City shall issue responses to inquiries and any other corrections or amendments it deems necessary in written addenda issued prior to the solicitation response due date. Bidders should not rely on any representations, statements or explanations other than those made in this solicitation or in any addendum to the solicitation. Where there appears to be a conflict between the solicitation and any addenda issued, the last addendum issued shall prevail.

3. **ADDITIONAL GOODS**

   Products, materials and goods not specifically identified in this bid request may be added to any resultant contract upon mutual consent of the contracting parties. The City reserves the right to add or delete products or materials of similar nature, within the family of products of "ITB Item(s)" and their commodity codes, to those items requested in this bid.

4. **ANTI-COLLUSION STATEMENT**

   By submitting a response to a formal solicitation, the bidder affirms that this response is without previous understanding, agreement, or connection with any person, business, or corporation submitting a response for the same materials, supplies, or equipment, and that the response is in all respects fair, and without collusion or fraud. Additionally, bidder agrees to abide by all conditions of this solicitation and certifies that he/she is authorized to sign the response for the bidding company/firm. In submitting a response to the City of Port Orange, the bidder offers and agrees that if the response is accepted, the bidder shall convey, sell, assign or transfer to the City of Port Orange all rights, title and interest in and to all causes of action it may now or hereafter acquire under the Anti-trust laws of the United States and the State of Florida for price fixing relating to the particular commodities or services purchased or acquired by the City of Port Orange. At the City's discretion, such assignment shall be made and become effective at the time the City tenders final payment to the bidder.

5. **APPLICABLE LAWS**

   In connection with the furnishing of supplies or performance of work under the contract, the bidder agrees to comply with the Fair Labor Standards Act, Equal Opportunity Employment Act, and all other applicable federal and state laws, regulations and executive orders to the extent that the same may be applicable.

6. **ASSIGNMENT**

The successful bidder shall not sell, assign, transfer or convey this contract in whole or in part, without the prior written consent of the City of Port Orange. Any such assignment or transfer shall not release the bidder from all contractual obligations.

7. **AUTHORITY TO CONDUCT BUSINESS IN FLORIDA**

A Florida corporation or partnership is required to provide evidence with its response that it is authorized to transact business in Florida and is in good standing with the Florida Department of State. If not with its response, such evidence must be submitted to the City no later than five (5) business days from request of the Purchasing Manager.

A foreign (out-of-state) corporation or partnership is required to provide evidence with its response that it is authorized to transact business in Florida and is in good standing with the Florida Department of State. If not with its response, such evidence must be submitted to the City no later than five (5) business days from request of the Purchasing Manager.

A joint venture is required to provide evidence with its response that it, or at least one of the joint venture partners, is authorized to transact business in Florida and is in good standing with the Florida Department of State. If not with its response, such evidence must be submitted to the City no later than five (5) business days from request of the Purchasing Manager. However, the joint venture is required to provide evidence prior to contract execution that the joint venture is authorized to transact business in Florida and provide the City with a copy of the joint venture Agreement. A joint venture is also required to provide with its response a Statement of Authority indicating that the individual submitting the joint venture's proposal has the legal authority to bind the joint venture. If not with its response, such evidence must be submitted to the City no later than five (5) business days from the request of the Purchasing Manager.

8. **AWARDS**

Recommendation for award will be considered by the City of Port Orange City Council at the earliest possible regular meeting subsequent to the evaluation process. This ITB is issued in accordance with and shall be governed by the provisions of the City's Purchasing Manual. The City of Port Orange City Council reserves the right to make award(s) by individual sections, groups, all or none, or a combination thereof, with one or more bidders; to reject any and all proposals, or to waive any informality or technicality in proposals received as deemed to be in the best interest of the City. The City does not award publicly funded contracts to those who knowingly employ unauthorized alien workers in violation of section 274A(e) of the Immigration and Naturalization Act, 8 United States Code s1324a(e). Such employment deprives legal workers of job opportunities. Violation of section 274A(e) shall be grounds for unilateral cancellation of the contract, proposal or quote for purchase of services and goods by the City of Port Orange.

9. **AWARD AND EXECUTION OF CONTRACT**

When a bid received has been determined to be satisfactory, a contract will be awarded, or Purchase Order issued to the lowest responsive and responsible Bidder within the time designated in the contract documents. The bidder(s) to whom the award is made shall execute the contract(s) and return it, together with the properly executed bonds and insurance certificates to the City within the time specified.

10. **BID RETURNS**

Bidders shall return all completed responses to the City of Port Orange at the address set forth in Section 2 of this document on the date and at the time specified. Late submissions will not be accepted and shall be returned to bidders unopened.

11. **BID PROTEST**

Any person who is adversely affected by the City's decision or intended decision shall file with the City Purchasing Manager a notice of protest in writing within 72 hours after the posting of the notice of decision or intended decision. With respect to a protest of the terms, conditions, and specifications contained in a solicitation, including any provisions governing the methods for ranking bids, proposals, statements, or replies, awarding contracts, reserving rights of further negotiation, or modifying or amending any contract, the notice of protest shall be filed in writing within 72 hours after the posting of the solicitation. Saturdays, Sundays, and state holidays shall be excluded in the computation of the 72-hour time established herein. The formal written protest shall be filed with the Purchasing Manager in writing within ten (10) days after the date the notice of protest is filed. The formal written protest shall state with particularity the facts and law upon which the protest is based. Failure to file a notice of protest or failure to file a formal written protest shall constitute a waiver of proceedings. Upon receipt of the formal written protest that has been timely filed, the City shall stop the

solicitation or contract award process until the subject of the protest is resolved by final City action. However, the City may continue the solicitation or award process, provided the City Manager sets forth in writing particular facts and circumstances which require the continuance of the solicitation or contract award process without delay in order to avoid an immediate and serious danger to the public health, safety, or welfare. The City shall provide an opportunity to resolve the protest by mutual agreement between the parties. The policy this City has established is as follows:

a. As soon as possible after receipt, the Purchasing Manager shall provide written bid protest to City Manager, City Attorney, Department Head involved, and Supervisor directly involved in the acquisition.
b. Purchasing Manager shall schedule within seven (7) business days, excluding weekends and holidays, a meeting with the above-mentioned individuals or designee and protestor. The intent of the meeting is to provide a review and/or solution prior to going before Council. After reviewing all relevant information, the City Manager shall render a decision.
c. If the protestor disagrees, he/she may appeal to the City Council at a formal council meeting. After reviewing the evidence, the City Council will issue their decision. The City Council's decision is final; however, the protestor can appeal the decision to the Circuit Court in Volusia County, Florida within thirty (30) days of the City Council's final decision. Decisions at all levels shall be in writing to the protester.

12. **BID TABULATION**

Bidders who wish to receive a copy of the bid tabulation may obtain it via DemandStar at www.demandstar.com or on the City Purchasing web page at www.port-orange.org/bids.aspx.

13. **BIDDER'S PRODUCT OR SERVICES**

The bidder's product (if applicable) delivered to the City shall be free of all liens, claims or encumbrances, and the bidder warrants that it has a clear title to the product being delivered.

a. If the bidder is contracted to provide services, such services shall be fully satisfactory to the City as determined by the City.
b. The bidder shall provide the City with any data, reports or other information as required and requested by the City to enable it to utilize the product or service furnished by the bidder.
c. In furnishing the service or product to the City, the bidder shall comply with all federal, state, county laws, and city rules, regulations and codes and their successors or amendments. Violation of such laws, rules, regulations and codes may be grounds for delaying or reducing the amount due, or in rescinding the contract, proposal or quote.

14. **BONDS**

If this solicitation requires submission of bid guarantee and payment and performance bonds, there will be a separate section explaining those requirements. When the Purchasing Manager deems it necessary, bid bonds/deposits shall be prescribed and are advertised in the public notices inviting bids. Responses submitted without the required bid bond or certified check shall be deemed non-responsive. Normally, if a bid bond/deposit is requested, it is in the amount of five percent (5%) of the bid amount.

Payment and Performance Bonds requested for construction projects shall be in an amount equal to one hundred percent (100%) of the total contract amount which will be recorded by the City, at the contractor's sole cost and expense, with the Clerk of the Circuit Court, Volusia County, Florida. After recording, the City will furnish to the contractor the recording information for the bond to evidence that the contractor has met the requirements of Florida law. The City will bill the cost of recording to the contractor. Unsuccessful respondents are entitled to the return of their bid bond. A successful respondent shall forfeit any surety required by the Purchasing Manager upon failure of the respondent to enter into a contract within the time specified after the award of bid.

15. **CERTIFICATE OF INSURANCE**

Upon issuance of a notice of intent to award, the selected bidder will be required to submit a Certificate of Insurance showing proof of adequate coverage for professional general liability, errors and omissions and workers' compensation as identified under the insurance requirements of this solicitation and listing the City of Port Orange as Additional Insured prior to execution of the contract.

16. **CHANGE ORDERS**

No oral statement of any person shall modify or otherwise change, or affect the terms, conditions or specifications stated in the resulting contract. All change order requests shall be made in writing by the supplier/contractor for review by the Contract Administrator for the City of Port Orange. No work shall be performed as set forth in the change order until the bidder receives an executed Purchase Order for the requested change.

17. **CHANGE ORDER REQUEST NOTIFICATION**

The awarded bidder is responsible for giving the City of Port Orange, prior to the contract expiration date, at least forty-five (45) calendar days of advance notice for any anticipated changes in price greater than $25,000, and any changes in time and/or scope of the awarded contract. The bidder shall not continue to provide services past the contract expiration date unless approved by a written Change Order Notice from the City.

18. **CLEAN UP**

Upon completion of the delivery of materials, the bidder shall restore any/all public and private property which may have been damaged during delivery. Restoration is meant to include removal of any spillage or restoring damage to the edge of pavement, sidewalks, driveways, landscaped areas, etc. Bidder shall make repairs consistent with or better than what existed prior to delivery. This shall be understood to include the use of sod or seed and mulch to replace (if necessary) existing grass that has been damaged. If sod is used it shall match the sod present on the effected property. Bidder shall make all repairs and restorations at his/her expense.

19. **CONDUCT OF BIDDERS**

All bidders or individuals acting on behalf of a bidder are hereby prohibited from lobbying or otherwise attempting to persuade or influence any member of the Evaluation Committee, City Council members, or City staff at any time during the course of the solicitation process. The solicitation process shall end upon issuance of the written staff recommendation (Notice of Intent to Award) for selection of a bidder. All bidders or individuals acting on behalf of a bidder are further prohibited from contacting or otherwise attempting to communicate with any member of the staff, Evaluation Committee or City Council members regarding the pending solicitation or its outcome until after the issuance of the written recommendation of the most qualified Bidder. Until such recommendation is issued in writing, any questions regarding the pending solicitation shall be submitted to the Purchasing Division. Failure to comply with this procedure shall result in rejection/disqualification of said submittal without exception. Contact with staff, City Council members or the Evaluation Committee during a public meeting shall not be considered a violation of this requirement.

20. **CONE OF SILENCE**

The Cone of Silence is designed to protect the integrity of the procurement process by shielding it from undue influences prior to the execution of the award. The Cone of Silence is defined as the period beginning with the issuance of the solicitation document and continues through the execution of the award document. During this time bidders, service providers and the like are prohibited from all communications regarding the solicitation with City staff, City consultants, City legal counsel, City Agents, or elected officials. Any bidder who initiates any discussions or attempts to influence a member or members of the aforementioned shall be disqualified from continued participation in the procurement process with regard to that particular solicitation.

Exceptions to the Cone of Silence:

- Written communication directed to the Procurement Officer;
- All communications occurring at Pre-Proposal Conferences;
- Oral presentations before publicly noticed committee meetings;
- Procurement of goods and services for Emergency situations; and
- Contractors already on contract with the City to perform services for the City are allowed discussions necessary for the completion of an existing contract.

21. **CONFLICT OF INTEREST**

For purposes of determining any possible conflict of interest, all bidders must disclose if any City of Port Orange employee is also an owner, corporate officer, or employee of bidder's business. No official or employee of the City who exercises any functions or responsibilities in the review or approval of the undertaking or carrying out of the Scope of Work covered by the contract shall voluntarily acquire any personal interest, directly or indirectly, in the contract or proposed contract.

22. **CONFLICT OF INSTRUCTIONS**

If a conflict exists between the General Terms and Conditions and instructions contained herein, and the Special Terms and Conditions and instructions contained herein, the Special Terms and Conditions shall govern.

23. **CONTRACT OBLIGATION**

Except as otherwise stated herein, the City of Port Orange City Council shall approve the contract if greater than $25,000.00 annually. The Mayor or other person authorized by the Mayor must sign the contract before it becomes binding on the City of Port Orange or the bidder. Department heads are NOT authorized to sign contracts for the City of Port Orange. Binding agreements shall remain in effect until all products and/or services covered by this purchase have been satisfactorily delivered and accepted.

24. **CONTRACT RENEWALS**

Renewals may be made ONLY by written agreement between the City of Port Orange and the bidder. Any price escalations are limited to those stated by the bidder on the original response.

25. **COPYRIGHT AND PATENT RIGHTS**

Bidder warrants that there has been no violation of copyrights or patent rights in manufacturing, producing and/or selling the item(s) ordered or shipped as a result of this response, and successful bidder agrees to hold the City harmless from any and all liability, loss or expense by any such violation.

26. **COST INCURRED BY BIDDER**

All expenses, including costs for required bonds, involved with the preparation and submission of Responses to the City, or any work performed in connection therewith shall be borne by the bidder. No payment shall be made for any response received, nor for any other effort required of or made by the bidder prior to commencement of work as defined by the contract approved by the City Council.

27. **DAMAGE**

Any damage to driveways, irrigation systems, sidewalks, pavement, or landscaping will be evaluated by the City's representative and the bidder. If the bidder is found to be at fault, all repairs, restitution, or reimbursements to the City must be completed within one week of discovery.

28. **DEBARMENT HISTORY**

The City will consider a bidder's debarment history information in its review and determination of responsibility. All bidders are required to disclose to the City all cases of debarment filed, pending, or resolved by the City or other public entity during the last five (5) years prior to the solicitation response due date, whether such actions were brought by or against the bidder, any parent or subsidiary of the bidder, or any predecessor organization. If the bidder is a joint venture, the information provided should encompass the joint venture (if it is not newly formed for purposes of responding to the solicitation) and each of the entities forming the joint venture. Although the review of a bidder's debarment history is an issue of responsibility, the failure to provide debarment history as required on the Certification Regarding Debarment, Suspension and Other Responsibility (contained herein) may result in a recommendation of non-responsive by the Purchasing Manager.

29. **DEFAULT PROVISIONS**

In the event of default by the bidder, the City reserves the right to procure the item(s) bid from other sources and hold the bidder responsible for excess costs incurred as a result. If a bidder defaults on a City contract, the City Council may elect to refrain from doing business with the bidder for a period of 36 months from the date of default.

30. **DELIVERY OF GOODS/SERVICES**

All materials are to be delivered F.O.B.; City of Port Orange designated facility. Delivery dates pertaining to this invitation must be clearly stated in the bid form where required and include weekends and holidays. Failure to comply with this requirement may be a cause for disqualification of bid. Unless otherwise specified, delivery at the earliest date is required. The bidder shall clearly state in the response the time required for delivery upon receipt of contract or purchase order. Proposed delivery time must be specific and such phrases "as required," "as soon as possible" or "prompt" may result in disqualification of the bid. Delivery time will be a factor for any orders placed as a result of this response. The City reserves the right to cancel such order(s) or any part thereof, without obligation, if delivery is not made within the time(s) specified herein and hold the Bidder in default. Upon approval of a contract, the bidder is obligated to deliver the goods to the destination specified in the solicitation or the purchase order and bears the risk of loss until delivery. If this solicitation or purchase order does not contain delivery instructions, bidder shall request instructions in writing from the Purchasing Manager. If the delivery instructions contained in the solicitation allocate delivery costs and risks in a manner contrary to this section, the provisions of this competitive solicitation shall prevail. When delivery is not met as provided for in the contract, the Purchasing Division reserves the right to make the purchase on the open market, with any cost in excess of the contract price paid by the bidder, in addition to any other damages, direct or consequential, incurred by the City as a result thereof. In addition, failure of the bidder to meet the contract delivery dates will be cause for removal of the bidder from the City's list of eligible bidders/proposers as determined by the Purchasing Division.

31. **DETERMINATION OF LOWEST AND BEST RESPONSIBLE BIDDER**

In determining the lowest and best responsible bidder, in addition to price, there will be considered the following:

a. The ability, capacity and skill of the bidder to perform the contract.
b. Whether the bidder can perform the contract within the time specified, without delay or interference.

c. The character, integrity, reputation, judgment, experience, and efficiency of the bidder.
d. The quality of performance of previous contracts.
e. The previous and existing compliance by the bidder with laws and ordinances relating to the contract.
f. The sufficiency of the financial resources and ability of the bidder to perform the contract or provide the service.
g. The quality, availability and adaptability of the supplies or contractual services to the particular use required.
h. The ability of the bidder to provide further maintenance and service for the use of the subject of the contract.
i. The number and scope of conditions attached to the bid.
j. Such other factors as appear to the city council to be pertinent to the bid or the contract under all of the circumstances involved.

32. **DISCLOSURE OF CONFLICTS**

The award is subject to the provisions of Chapter 112.313, Florida Statutes. All bidders must disclose with their response the name of any officer, director, or agent who is also an employee of the City. Further, all bidders must disclose the name of any employee who owns, directly or indirectly, an interest in the bidder's firm or any of its branches. The bidder shall not compensate, in any manner, directly or indirectly, any officer, agent, or employee of the City for any act or service that he/she may do, or perform for, or on behalf of any officer, agent or employee of the bidder. No officer, agent, or employee of the City shall have any interest, directly or indirectly, in any contract or purchase made, or authorized to be made by anyone for, or on behalf of the City. The bidder shall have no interest and shall not acquire any interest that shall conflict in any manner or degree with the performance of the services required under the solicitation.

33. **DISQUALIFICATION OF BIDDER**

The Purchasing Manager shall maintain a current listing of qualified bidders. The Purchasing Manager may, from time to time, remove any bidder's name from the list of qualified bidders. Normally the removal of a bidder from the bidder list is done after nonresponse from that bidder for three (3) consecutive solicitations. Such action may also arise out of breach of contract, default, or irregular business practice, based on the Finance Director and City Attorney's recommendation. Any or all responses may be rejected if the City believes that collusion exists among the bidders. Responses in which the prices are obviously unbalanced may be rejected. If multiple responses are submitted by a bidder and after the responses are opened one of the responses is withdrawn, the result will be that all of the responses submitted by that bidder will be withdrawn; however, nothing herein prohibits a bidder from submitting multiple responses for different products or services.

34. **EVALUATION**

Evaluation shall be used as a determinant as to which response items or services are the most efficient and/or most economical for the City. It shall be based on all factors which have a bearing on price and performance of the items in the user environment. All responses are subject to tabulation by the City of Port Orange Purchasing Division and recommendation to the governing body. Compliance with all solicitation requirements, delivery and needs of the using department are considerations in evaluating responses. Pricing is NOT the only criteria for making a recommendation. The City of Port Orange Purchasing Division reserves the right to contact any bidder/proposer, at any time, to clarify, verify or request information with regard to any response.

35. **EXCEPTIONS TO SPECIFICATIONS**

For purposes of evaluation, the bidder must indicate any exception to the specifications, terms, and/or conditions, no matter how minor. This includes any agreement or contract forms supplied by the bidder that are required to be signed by the City. If exceptions are not stated by the bidder, in his bid, it will be understood that the item(s)/services fully comply with the specifications, terms and/or conditions stated by the City. Exceptions are to be listed by the bidder on an attachment included with the bid. The City will not determine exceptions based on a review of any attached sales or manufacturer's literature.

36. **E-VERIFY**

Bidders shall utilize the U.S. Department of Homeland Security's E-Verify system to verify the employment eligibility of all new employees hired by the bidder during the term of contract and shall expressly require any subcontractor performing services pursuant to the contract to likewise utilize the U.S. Department of Homeland Security's E-Verify system to verify the employment eligibility of all new employees hired by the subcontractor during the term of contract.

37. **FACILITIES**

The City reserves the right to inspect the bidder's facilities at any time.

38. **FAILURE TO RESPOND**

If the bidder elects not to bid, please return the enclosed "No Submittal Response Form" by the bid due date and state the reason(s) for not bidding. Failure to respond, either by submitting a bid, or by submitting a "No Submittal Response Form", three (3) times, shall result in the bidder's name being removed from the City's mailing list.

39. **FINANCIAL STABILITY**

Bidders shall be prepared to supply a financial statement upon request, preferably a certified audit of the last available fiscal year. A third party prepared financial statement and the latest Dunn & Bradstreet report will be accepted in lieu thereof.

40. **FORCE MAJEURE**

Neither party shall be liable for any delay in performance or failure to perform any obligation hereunder if, and to the extent that, such failure or delay is caused by an event of force majeure. Force majeure shall mean any act, event or condition that is beyond the party's reasonable control, that materially and adversely affects the party's ability to perform its obligations hereunder, and that is not the result of the party's willful neglect, error, omission or failure to exercise reasonable due diligence.

41. **FOREIGN COUNTRIES OF CONCERN**

A governmental entity may not knowingly enter into a contract with an entity which would give access to an individual's personal identifying information if: a) the entity is owned by the government of a foreign country of concern to include the People's Republic of China, the Russian Federation, the Islamic Republic of Iran, the Democratic People's Republic of Korea, the Republic of Cuba, the Venezuelan regime of Nicolas Maduro, or the Syrian Arab Republic, including any agency of or any other entity of significant control of such foreign country of concern; b) the government of a foreign country of concern has a controlling interest in the entity; or c) the entity is organized under the laws of or has its principal place of business in a foreign country of concern.

42. **GOVERNING FORMS**

In the event of any conflict between the terms and provisions of these requirements and the specifications, the specifications shall govern. In the event of any conflict of interpretation of any part of this overall document, the City's interpretation shall govern.

43. **GOVERNING LAW**

Bidders shall comply with all applicable federal, state and local laws and regulations. All responses are solicited and shall be made pursuant to the Code of Ordinances, City of Port Orange, Chapter 2, Article VI, Division 2, Section 2-263, and all responses will be evaluated in accordance with the provisions thereof. Code of Ordinances, City of Port Orange is on file in the Office of the City Clerk, City Hall, 1000 City Center Circle, Port Orange, Florida and at www.municode.com. The City of Port Orange is also governed by the Consultants' Competitive Negotiation Act, Section 287.055, Florida Statutes, as the method of selecting architects, engineers and land surveyors. The City has utilized the procedures in the Act for Professional counselors, environmentalists, planners, general contractors, computer systems, designers, telecommunications consultants, maintenance technicians, financial services and other professional services. Every acquisition equal to or greater than $35,000.00 must have a signed, notarized "Public Entity Crimes Form" to comply with Section 287.133(3)(a), Florida Statutes. Also required is the "Drug- Free Preference Form" to comply with Section 287.087, Florida Statutes. Each form is included in the Solicitation.

44. **GRANT FUNDING**

Any contract entered into by the City that is to be paid from grant funds shall be limited to payment from the grant funding and the bidder understands that the City has not set aside any City funds for the payment of obligations under a grant contract. If grant funding should become unavailable at any time for the continuation of services paid for by the grant, and further funding cannot be obtained for the contract, then the sole recourse of the provider shall be to terminate any further services under the contract and the contract shall be null and void.

45. **HIPAA COMPLIANCE**

The bidder agrees to comply with the Standards for Privacy of Individually Identifiable Health Information of the Health Insurance Portability and Accountability Act of 1996, PL 104-191, 45 CFR Parts 160-164, as amended, referred to as "HIPAA," to the extent that the bidder uses, discloses or has access to protected health information as defined by HIPAA.

46. **IDENTICAL TIE BIDS**

If there are tie bids, meaning everything except the information relating to the submitting firm is the same, the following methods shall be used in the order below to break the tie:

- If one has or had a contract with the City and performance is or was satisfactory. If performance of a tie bidder who has or had a contract with the City and performance is or was not satisfactory, the other tie-bidder is awarded.
- Drug free workplace policy in place.

47. **INDEMNIFICATION/HOLD HARMLESS**

(a) Bidder shall be liable for any loss of, or damage to, City property caused by the negligence, recklessness, or intended wrongful misconduct of bidder, his/its agents, servants and employees and shall indemnify and save the City harmless against all actions, proceedings, claims, demands, costs, damages and expenses, including attorney's fees, by reason of any suit or action brought for any actual or alleged injury to or death of any person or damage to property other than City property, resulting from the performance of the contract by the bidder, his/its agents, servants and employees. Bidder shall submit a full written report to the Finance Director within twenty-four (24) hours following the occurrence of such damage, loss or injury.

(b) To the fullest extent permitted by law, in addition to the express duty to indemnify City when there is any causal connection between bidder's work and any injury, loss, damage, death or property damage, bidder expressly undertakes a duty to defend City as a separate duty, independent of and broader than the duty to indemnify. The duty to defend agreed to by bidder hereby expressly include all costs of litigation, attorney's fees, settlement costs and reasonable expenses in connection with the litigation, whether or not the claims made for loss, injury, damage or property damage are valid or groundless and regardless of whether the defense of City is maintained by the City or assumed by bidder as long as the claims made could be causally connected to bidder as reasonable determined by the City.

48. **INDEPENDENT CONTRACTOR**

It is expressly understood and agreed by both parties hereto that the City is contracting with the successful bidder as an independent contractor. The parties hereto understand and agree that the City shall not be liable for any claims which may be asserted by any third party occurring in connection with the services to be performed by the successful bidder under this contract and that the successful bidder has no authority to bind the City. The bidder represents itself to be an independent contractor offering such services to the public and shall not represent himself or his employees to be an employee of the City. Therefore, the bidder shall assume all legal and financial responsibility for taxes, FICA, employee fringe benefits, worker's compensation, employee insurance, minimum wage requirements, overtime, etc., and agrees to indemnify, save, and hold the City, its officers, agents, and employees, harmless from and against, any and all loss; cost (including attorney's fees); and damage of any kind related to such matters. The bidder shall further understand that the City cannot save and hold harmless and or indemnify the bidder and/or the bidder's employees against any liability incurred or arising as a result of any activity of the bidder or any activity of the bidder's employees performed in connection with the contract.

49. **INSPECTIONS AND TESTING**

City of Port Orange reserves the right to inspect any item(s) or service location for compliance with specifications and requirements and needs of the using department. If a bidder cannot furnish a sample of a response item, where applicable, for review, or fails to satisfactorily show an ability to perform, the City can reject the response as inadequate and non-responsive.

50. **INSURANCE CANCELLATION**

No change or cancellation in insurance shall be made without thirty (30) days of written notice by the bidder to the City. Insurance coverage required in these specifications shall be in force throughout the contract term. Should any awardee fail to maintain or to provide acceptable evidence of current insurance within five (5) days after receipt of written notice at any time during the contract term, the City shall have the right to consider the contract breached which shall justify the termination thereof.

51. **INSURANCE REQUIREMENTS**

Bidder shall maintain insurance, as required herein, during the life of this contract. Bidder shall provide to the City, a certificate of insurance endorsing the City of Port Orange as an additional named insured. All insurance coverages of the bidder shall be primary and non- contributory. All insurance coverages of the bidder shall not seek contribution from any other insurance or self- insurance available to the City. For workers' compensation coverage, the bidder's insurance certificate shall include the insurer's waiver of subrogation in lieu of endorsing the City as an additional insured for workers' compensation.

IMPORTANT: The City does not accept Workers' Compensation Exemptions. Bidder may use leased employees if the bidder ensures that all workers who access the jobsite are employees covered by the employee leasing company, and no non-employees are permitted to access the jobsite. Any bidder using a leased employee shall complete the City's Leased Employee Affidavit Form Exhibit. Policies for Workers' Compensation may be issued by companies authorized as a group self-insurer by F.S. 440.572. Policies other than Workers' Compensation shall be issued by insurers licensed and/or duly authorized under Florida Law to do business in the State of Florida and all insuring companies are required to have a minimum rating of "A-" in the "Best Key Rating Guide" published by A.M. Best & Company, Inc. Bidder shall not commence work under this contract until the City has received a certificate or certificates of insurance with endorsement evidencing the required insurance. Insurer shall provide the City written notice of cancellation, non-renewal or any other changes in coverage no later than thirty (30) days prior to the effective date of the change and shall provide notice to the City no later than 10 days after non-payment. The Certificates of Insurance and required insurance policies shall contain provisions that thirty (30) days of prior written notice shall be given to the City of any cancellation, intent not to renew, or reduction in the policies or coverages. Bidder shall require and ensure each of its subcontractors to maintain, until the completion of the subcontractor's work, insurance of the types and to the limits set forth herein. All insurance coverages shall be primary and non-contributory. All insurance coverages of the subcontractors shall not seek contribution from any other insurance or self-insurance available to the City. The bidder is responsible for ensuring that its subcontractors maintain the required coverage. Failure of the bidder to ensure the subcontractors maintain the required coverage, shall not relieve the bidder of any contractual responsibility, obligation or liability. The City reserves the right to increase the insurance coverage requirement as determined for higher risk contracts. The acceptance by the City of any Certificate of Insurance does not constitute approval or agreement by the City that the insurance requirements have been satisfied or that the insurance policy shown on the Certificate of Insurance is in compliance with and does not waive the insurance required by this. Should at any time the bidder or subcontractors not maintain the insurance coverages required herein, the City may terminate the contract or at its sole discretion shall be authorized to purchase such coverages and charge the bidder for such coverages purchased. The City shall be under no obligation to purchase such insurance, nor shall it be responsible for the coverages purchased or the insurance company or companies used. The decision of the City to purchase such insurance coverages shall in no way be construed to be a waiver of any of its rights under the contract.

Standard Insurance Requirements			
Required	**Insurance**	**Standards**	**Additional Requirements**
☒	Workers' Compensation The Contractor shall maintain coverage for its employees with statutory workers' compensation limits, and no less than the limits indicated in the Schedule of Limits for Employers' Liability. Said coverage shall include a waiver of subrogation in favor of the City. **The City will not accept elective exemptions.** Any Contractor using an employee leasing Company shall complete the Leased Employee Affidavit Exhibit Form.	Contract Amount — Limits Up to $10 million — Statutory/$500,000 $10 - $20 million — Statutory/$1,000,000 Contracts over $20 million to be determined by the City	• If contract requires work on or about navigable waters, Longshoreman's and Harbor Workers' coverage required. • If vessels involved, Jones Act coverage with limits of $500,000 required
☒	Comprehensive General Liability (including completed operations and contractual liability)	Limits: Combined Single Limit Bodily Injury and Property damage: $1,000,000 each occurrence $1,000,000 aggregate	When work is on or under Railroad rights of way or properties, the Contractor shall take out and maintain during the life of the contract, Railroad protective liability and property damage insurance in amounts as requested by the Railroad.
☒	Comprehensive Business, Automobile Liability to include all owned, hired and non-owned automobiles	Limits: Auto Liability Bodily Injury and Property Damage: $1,000,000 each occurrence $1,000,000 aggregate	
Additional Insurance Requirements			
☐	Property Insurance Builders Risk Additional Coverage:	Limits: Buildings – completed value of contract "All Risk" coverage on latest ISO for or its equivalent. Permission grated to occupy. Owner named as insured AIMA	If agreement required handling or installation of Owner's equipment, coverage should be furnished on "All Risk" form, including transit and Owner shall be named.
☐	Installation Floater (IT)	Limits: Coverage – To Be Determined	
☐	Contractor Pollution Liability	Limits: Coverage - $1,000,000	
☐	Professional Liability/Errors and Omissions	Limits: Coverage - $1,000,000	
☐	Umbrella Policy	Limits: Coverage – To Be Determined	
☒	Payment and Performance Bond required	Limits: Coverage – equal to amount of contract	
	City Manager waives Payment and Performance Bond for work under $200,000 unless otherwise requested by the Department Head.		
	Unless otherwise required by law, City Manager waives insurance for FOB goods only purchases.		

52. **INVOICES AND PAYMENTS**

Pay Applications shall be in accordance with Article 15 of the contract. If the awarded firm would like to receive payment via ACH, this can be accommodated after the contract is fully executed.

53. **IRREVOCABILITY OF RESPONSES**

Each bidder agrees that responses shall remain open until the contract effective date not to exceed 90 days after the award selection, shall not be subject to revocation or withdrawal, and shall be subject to the City Council's acceptance of a contract with the bidder.

54. **LATE SUBMISSIONS, LATE MODIFICATIONS AND LATE WITHDRAWALS**

Responses received after the response due date and time are late and shall not be considered. Modifications received after the response due date are also late and shall not be considered. Letters of withdrawal received after the response due date are late and shall not be considered. Letters of withdraw received after contract award shall be deemed a breach of contract, subject to penalties as set forth in the contract and solicitation.

55. **LEGAL REQUIREMENTS**

Applicable provision of all federal, state, county and local laws, and all ordinances, rules, and regulations shall govern development, submittal and evaluation of all responses received in response hereto and shall govern any and all claims and disputes which may arise between person(s) submitting a response to a solicitation hereto and the City by and through its officers, employees and authorized representatives, or any other person, natural or otherwise; and lack of knowledge by any bidder shall not constitute a cognizable defense against the legal effect thereof.

56. **LICENSES, PERMITS AND TAXES**

The bidder shall comply with all rules, regulations, laws and permitting requirements of the City, Volusia County, the State of Florida, and the United States Government now in force or hereafter to be adopted. The bidder shall abide by all ordinances and laws pertaining to his/her operations and shall secure, at his/her expense, all licenses and permits necessary for construction and operation.

57. **LITERATURE (if applicable):**

If no brand, model or make is specified, bidders shall submit descriptive literature and technical data, fully detailing all features, designs, construction, appointments, finishes and the like not covered in the specifications, necessary to fully describe the equipment, material, and/or services bidder proposes to furnish.

58. **MAINTENANCE**

If maintenance is required for equipment purchased as a result of this solicitation, it is preferred that such maintenance be available to the City of Port Orange by a manufacturer-authorized maintenance facility. Costs for this service shall be shown on the Schedule of Unit Pricing form for this solicitation. If the City of Port Orange opts to include maintenance, it shall be so stated in the purchase order and said cost will be included. Service will commence only upon expiration of applicable warranties and shall be priced accordingly.

59. **NAME BRANDS**

Specifications may reference name brands and model numbers. It is not the intent of the City of Port Orange to restrict these bids in such cases, but to establish a desired quality level of merchandise or to meet a pre-established standard due to like existing items. Bidders may offer items of equal stature and the burden of proof of such stature rests with the bidder, unless otherwise specified by the City. The City of Port Orange shall act as sole judge in determining equality and acceptability of products offered.

60. **NON-DISCRIMINATION**

There shall be no discrimination as to race, color, religion, gender, age, marital status, national origin, ancestry, and physical or mental disability in the operations conducted under this contract. Included as applicable activities by the contractor under this section are the solicitation for or purchase of goods or services, or the subcontracting of work in performance of this contract.

61. **NON-EXCLUSIVITY OF CONTRACT**

The selected bidder understands and agrees that any resulting contractual relationship is non-exclusive, and the City of Port Orange reserves the right to seek similar or identical services elsewhere if deemed in the best interest of the City of Port Orange.

62. **NON-PERFORMANCE**

Failure to meet the expected quality of workmanship, schedule, or other criteria agreed upon, shall be considered a default. In case of default, the City may procure the required services from other sources and hold the contractor responsible for any excess costs occasioned thereby and may immediately cancel the contract.

63. **NOTICE TO CONTRACTOR**

The employment of unauthorized aliens by any contractor is considered a violation of Section 274A (e) of the Immigration and Nationality Act. If the contractor knowingly employs unauthorized aliens, such violation shall be cause for unilateral cancellation of the contract.

64. **PATENTS/COPYRIGHTS**

The successful bidder agrees to indemnify and hold the City harmless from any claim involving patent infringement or copyrights on goods supplied.

65. **PRE-BID CONFERENCE**

The Purchasing Manager shall determine if a pre-bid conference is required and provide the date, time and location in the solicitation legal advertisement and solicitation specifications. The conference shall normally be held in the Council Chambers, located on the first floor of City Hall, 1000 City Center Circle, Port Orange, Florida. A site visit may be included and shall immediately follow. Only bidders attending a mandatory pre-bid conference will be eligible to submit a response. The representative of each bidder shall be an authorized employee of the bidder and shall sign in accordingly.

66. **PREPARATION OF RESPONSES**

In preparing responses, the Schedule of Unit Pricing form, the Bid Bond form (when a Bid Bond is required as bid security), Certificate as to Corporate Principal, Public Entity Crimes Statement, Anti- Collusion Statement, and Drug Free Preference Statement must be properly executed in ink. The prescribed Schedule of Unit Prices shall be typewritten or written in ink, or electronically imputed in the blank spaces for each item, with the amounts extended if a unit price bid, and all amounts totaled. The sum of the total bid as calculated from the individual items, Schedule of Unit Prices, shall equal the Total Price. Except as provided below, bids containing substitutions or combinations of alternates will not be considered unless such substitutions or combinations are specifically authorized by the solicitation. The bidder shall sign his/her name and give his/her business address in the spaces provided therefore. If the submittal is made as a partnership, it shall be signed by all partners; if made by a corporation, it shall be signed in the name of the corporation by one of the officers thereof and shall have affixed the seal of the corporation.

67. **POSTPONEMENT/CANCELLATION/WAIVER OF IRREGULARITIES**

The City may, at its sole and absolute discretion, reject any and all, or parts of responses; re- advertise the solicitation for new responses; postpone or cancel, at any time, the solicitation process; or waive any irregularities in the solicitation or in the responses received as a result of the solicitation, or to accept that response which best serves the interest of the City.

68. **PRICING**

Responses may not be withdrawn before the expiration of one-hundred-twenty (120) days. Prices shall be firm, with no escalator clauses unless specified by the City. Responses may be withdrawn after one-hundred-twenty (120) days only upon written notification to the City. Prices for all goods and/or services shall be firm for the duration of this contract and shall be stated on the Schedule of Unit Pricing form. Prices shall be all inclusive: no price changes, additions, or subsequent qualifications will be honored during the course of the contract. All prices must be written in ink or typewritten. Pricing on all transportation, freight, drayage and other charges are to be prepaid by the contractor and included in the bid prices. If there are any additional charges of any kind, other than those mentioned above, specified or unspecified, the bidder shall indicate the items required and attendant costs or forfeit the right to payment for such items. Where unit pricing and extended pricing differ, unit pricing prevails. In the event of any discrepancy between the written amounts and the numerals, the written amounts shall govern and will be considered as the price bid. When submitting bids/proposals based on a lump sum basis, bidders shall be required to submit a price for each line item listed on the Schedule of Unit Pricing in order to be considered for award.

69. **PRODUCTS/ESTIMATES**

Items included on the bid form represent the needs of various departments within the City. This is in no way to be construed as the entire or complete list of products to be purchased from the resulting contract. There is no anticipated dollar volume for this contract and estimated quantities provided on the Schedule of Unit Pricing are for bidding purposes only and are not guaranteed. Items shall be ordered on an as needed, when needed basis. Exact quantities or estimated quantities cannot be predetermined.

70. **PROPRIETARY INFORMATION**

Upon receipt by the City, responses to solicitations, become public records subject to the provisions Florida's state policy on public records, Section 119, Florida Statutes. If you believe that any portion of your response is exempt, you should clearly identify the specific documents for which confidentiality is claimed and provide

specific legal authority of the asserted exemption. Any financial statement that an agency requires a prospective bidder to submit in order to prequalify for bidding or for responding to a proposal for a road or any other public works project is exempt from Section 119.07, Florida Statutes, and Article I, 24(a), Florida Constitution.

71. **PROTECTION**

Precaution shall be exercised at all times for the protection of persons, (including employees) and property. All existing structures, utilities, services, roads, trees, shrubbery, etc. shall be protected against damage or interrupted service at all times by the contractor during the term of contract, and the contractor shall be held responsible for any damage to the property occurring by reason of his/her operation on the property.

72. **PUBLIC ENTITY CRIMES**

In accordance Section 287.133 (2)(a), Florida Statutes: A person or affiliate who has been placed on the convicted bidder list following a conviction for a public entity crime may not submit a bid on a contract to provide any goods or services to a public entity, may not submit a bid on a contract with a public entity for the construction or repair of a public building or public work, may not submit bids on leases of real property to a public entity, may not be awarded or perform work as a contractor, supplier, subcontractor or consultant under a contract with any public entity, and may not transact business with any public entity in excess of the threshold amount provided Section 287.017, Florida Statutes, for CATEGORY TWO for a period of 36 Months from the date of being placed on the convicted Bidder list.

73. **PUBLIC RECORDS COMPLIANCE**

Contractor shall comply with public records laws as set forth in Section 119, Florida Statutes, and shall specifically:

a. Keep and maintain public records that ordinarily and necessarily would be required by the City in order to perform the service.
b. Provide the public with access to public records on the same terms and conditions that the City would provide the records and at a cost that does not exceed the cost provided in Section 119, Florida Statutes, or as otherwise provided by law.
c. Ensure that public records that are exempt or confidential and exempt from public records disclosure requirements are not disclosed except as authorized by law.
d. Meet all requirements for retaining public records and transfer to the City, at no cost, all public records in possession of the contractor upon termination of the contract and destroy any duplicate public records that are exempt or confidential and exempt from public records disclosure requirements. All records stored electronically must be provided to the City in a format that is compatible with the information technology systems of the City.

IF THE VENDOR HAS QUESTIONS REGARDING THE APPLICATION OF CHAPTER 119, FLORIDA STATUTES, TO THE VENDOR'S DUTY TO PROVIDE PUBLIC RECORDS RELATING TO THIS CONTRACT, CONTACT THE CUSTODIAN OF PUBLIC RECORDS AT 386-506-5563, cityclerk@port-orange.org , CITY OF PORT ORANGE, 1000 CITY CENTER CIRCLE, PORT ORANGE, FLORIDA, 32129.

The failure of contractor to comply with a public records request shall constitute a material breach of the contract.

74. **PUBLIC RECORDS/PUBLIC MEETINGS EXEMPTION STATEMENT**

Section 119.071(1)(c), Florida Statutes: **Any financial statement that an agency requires a prospective bidder to submit in order to prequalify for bidding or for responding to a proposal for a road or any other public works project is exempt from s. 119.07(1) and s. 24(a), Art. I of the State Constitution. On June 2, 2011, Governor Scott signed HB 7223 into law.** This new legislation amends Florida's Public Records and Sunshine Laws, by expanding "exemptions" applicable to bids, proposals and replies to sealed competitive solicitations, and closes evaluation meetings from the public in certain instances. First, Section 119.071, Florida Statutes was amended to provide that sealed bids, proposals, or replies received by a Florida public agency shall remain exempt from disclosure until an intended decision is announced or until 30 days from the opening, whichever is earlier. This means that bidders will not be able to procure a copy of their competitors' bids until an intended decision is reached or 30 days has elapsed since the time of the bid opening. The prior version of the law provided for a 10-day exemption. Next, Section 286.0113, Florida Statutes was amended to provide that meetings of persons appointed to evaluate bids or proposals and negotiate contracts shall be closed in certain circumstances. Specifically, portions of such meetings may now be closed to the public during oral presentations made by a bidder, or where a bidder answers questions. In other words, neither bidders, nor the public will be

permitted to sit in on meetings, unless this exemption is waived by the City Council, wherein their competitors are making presentations or discussing their bid or proposal with the committee members. The portions of these meetings must still be recorded and are subject to disclosure at the time of an intended award decision or within 30 days of the bid or proposal opening, whichever is earlier. Portions of the meetings that do not involve presentations, questions and answers, or negotiation strategy or negotiation sessions are still open to the public and competing bidders, but the new law limits public attendance to portions of such meetings.

75. **PURCHASE ORDER AND DELIVERY**

The successful bidder shall not deliver products or provide services without a City of Port Orange purchase order, signed by an authorized agent of the City of Port Orange. The fastest, most reasonable delivery time shall be indicated by the bidder. Any special information concerning delivery should also be included, on a separate sheet, if necessary. All items shall be shipped F.O.B. INSIDE DELIVERY unless otherwise stated in the specifications. This shall be understood to include bringing merchandise to the appropriate room or place designated by the using department. Every tender or delivery of goods must fully comply with all provisions of these requirements and the specifications including time, delivery and quality. Nonconformance shall constitute a breach which shall be rectified prior to expiration of the time for performance. Failure to rectify within the performance period shall be considered cause to reject future deliveries and cancellation of the contract by City of Port Orange without prejudice to other remedies provided by law. Where delivery times are critical, the City of Port Orange reserves the right to award accordingly.

76. **QUALITY**

All materials used for the manufacture or construction of any supplies, materials or equipment covered by this bid shall be new. The items bid must be new, the latest model, of the best quality and highest-grade workmanship unless otherwise specified in this bid by the City.

77. **QUESTIONS/INTERPRETATIONS**

Questions regarding interpretation of responses, solicitation results or solicitation awards shall be directed in writing to the Purchasing Division and referenced by the solicitation number no later than the last day for questions as specified in the solicitation documents. The City of Port Orange shall not be responsible for oral interpretations given by any City personnel or representative or others. The issuance of a written addendum is the only official method whereby interpretation, clarification or additional information can be given.

78. **RECORDS/AUDIT**

(a) The contractor agrees that the City, or any duly authorized representative, shall, until the expiration of five (5) years after final payment hereunder, have access to and the right to examine and copy any pertinent books, documents, papers and records of the contractor involving transactions related to this contract.

(b) The contractor further agrees to include in any subcontract for more than $10,000 entered into as a result of this contract, a provision to the effect that the subcontractor agrees that the City or any duly authorized representative shall, until the expiration of five (5) years after final payment under the subcontract, have access to and the right to examine and copy any pertinent books, documents, papers and records of such contractor involved in transactions related to such subcontract, or this contract. The term subcontract as used herein shall exclude purchase orders for public utility services at rates established for uniform applicability to the general public.

(c) The period of access provided in subparagraphs (a) and (b) above for records, books, documents and papers which may relate to any arbitration, litigation, or the settlement of claims arising out of the performance of this contract or any subcontract shall continue until any appeals, arbitration, litigation or claims shall have been finally disposed of.

79. **RECYCLED MATERIALS**

City of Port Orange encourages the use of products made of recycled materials.

80. **REJECTING OF RESPONSES/RE-BIDDING**

The City reserves the right to accept or reject any or all responses or parts of responses, to waive irregularities and technicalities, and to request re-bids. The City also reserves the right to award the contract on such items the City deems will best serve the interests of the City. The City further reserves the right to award the contract on a "split order" basis, or such combination as shall best serve the interests of the City unless otherwise specified. The City Council shall have the authority to reject any and all responses. If the lowest and best response exceeds the budgeted amount and the City Council does not make additional funds available, the Purchasing Division with the help of the department head shall have the authority to re-advertise the article or articles for bidding after making sufficient changes in the plans or specifications to bring the cost within the limit of the money available. (Code 1981, § 8-28.)

81. **REQUEST FOR ADDITIONAL INFORMATION**

Prior to the final solicitation selection, bidders may be required to submit additional information which the City may deem necessary to further evaluate the bidder's qualifications to perform under the terms of the solicitation and subsequent contract.

82. **REVIEW OF RESPONSES/SUBMISSIONS**

Each response will be reviewed to determine if the response is responsive to the submission requirements outlined in the solicitation. A responsive response is one which follows the requirements of the solicitation, includes all required documentation, is submitted in the format outlined in the solicitation, is of timely submission, and has the appropriate signatures as required on each document. Failure to comply with these requirements may deem your response non-responsive.

83. **RIGHT OF WITHDRAWAL**

A bid, proposal, statement, or reply may not be withdrawn before the expiration of one-hundred-twenty (120) days from the response due date.

84. **RIGHTS TO SOLICITATION SUBMITTED MATERIAL**

All responses, inquiries, or correspondence relating to or in reference to a solicitation, and all reports, charts, and other documentation submitted by bidders shall become the property of the City when received.

85. **RULES, REGULATIONS AND LICENSING REQUIREMENT**

The bidder shall comply with all laws, ordinances and regulations applicable to the services contemplated herein, including those applicable to conflict of interest and collusion. Bidders are presumed to be familiar with all federal, state and local laws, ordinances, codes and regulations that may in any way affect the services offered.

86. **SAMPLES**

Samples, when requested, must be furnished at, or before the bid opening, (unless otherwise specified), and will be delivered at no charge to the City. If not used and/or destroyed in testing, said sample(s) will, at the bidder's request, be returned within thirty (30) days after bid award at the bidder's expense. If requested by the City, samples and/or inspection of like items are to be made available in the central Florida area.

87. **SCRUTINIZED COMPANIES LIST**

The Contractor shall refrain from any of the prohibited business activities with the Governments of Sudan and Iran as described in section 215.473, Florida Statutes. Pursuant to section 287.135(5), Florida Statutes, the City may immediately terminate this Contract for cause if the Contractor is found to have submitted a false certification or if the Contractor is placed on the Scrutinized Companies with Activities in Sudan List or the Scrutinized Companies with Activities in the Iran Petroleum Energy Sector List or is engaged in business operations with Cuba or Syria during the term of the contract. The Contractor shall provide a completed Form 7.10 Scrutinized Company Certification, certifying the Contractor's compliance with this section, prior to the execution of this Agreement.

88. **SEPARATION AND DISTRUBUTION**

The solicitation has been designed for transmittal as a complete document to interested parties. It is recommended that it not be separated; however, it may be reproduced in its entirety as additional distribution might dictate.

89. **SEVERABILITY**

If any section, subsection, paragraph, sentence, clause, phrase or word of these requirements or the specifications shall be held invalid, such holding shall not affect the remaining portions of these requirements and the specifications and it is hereby declared that such remaining portions would have been included in these requirements and the specifications as though the invalid portion had been omitted.

90. **SIGNATURE REQUIRED**

All responses must show the company name and be signed by a company officer or employee who has the authority to bind the company or firm by their signature. UNSIGNED RESPONSES WILL BE REJECTED. All manual signatures must be original - no rubber stamp, photocopy, etc.

91. **SIGNED RESPONSE CONSIDERED AN OFFER**

The signed response is considered an offer on the part of the bidder, which offer shall be considered accepted upon approval by the City of Port Orange City Council (if required). The City of Port Orange will issue a purchase order or a letter of authorization to the successful bidder, as authorization for delivery of the items awarded subject to requirements of detailed specifications and those contained herein. In the event of default on the part of the bidder after such acceptance, the City may take such action as it deems appropriate including legal action for damages or specific performance.

92. **SILENCE OF SPECIFICATIONS**

The apparent silence of specifications as to any detail, or the apparent omission from it of a detailed description concerning any point, shall be regarded as meaning that only the best commercial practice is to prevail and that only material and workmanship of the finest quality are to be used. All interpretations of specifications shall be made on the basis of this statement. The items furnished under this contract shall be new, unused of the latest product in production to commercial trade and shall be of the highest quality as to materials used and workmanship. Manufacturer furnishing these items shall be experienced in design and construction of such items and shall be an established supplier of the item bid.

93. **SOCIAL, POLITICAL, OR IDEOLOGICAL INTERESTS**

Pursuant to Florida Statute 287.05701, the governing body of a county, municipality, special district, or any other political subdivision of the state may not request documentation of or consider a vendor's social, political, or ideological interests when determining if the vendor is responsible. Furthermore, an awarding body may not give preference to a vendor based on the vendor's social, political, or ideological interests.

94. **SOLICITATION FORM COMPLETION, SUBMISSION AND RECEIPT OF RESPONSES**

Unless otherwise specified, bidders shall use the solicitation forms supplied by the Purchasing Division. Responses shall be typewritten or handwritten in ink and shall bear the original signature of the bidder's authorized representative. Responses containing erasures or corrections must be initialed by the bidder in ink. Responses shall be submitted by mail or hand delivery only. No response will be accepted by facsimile transmission, e-mail or other electronic delivery. Responses submitted by mail shall be addressed to: City Clerk, City of Port Orange, Attn: Purchasing Division, Port Orange City Hall, 1000 City Center Circle, Port Orange, Florida 32129. Responses submitted by hand delivery shall be delivered to: City Clerk, Port Orange City Hall, 1000 City Center Circle, Port Orange, Florida 32129. Responses will be accepted until 2:30 PM EST on the date indicated in the solicitation documents or as addenda issued by the City. One (1) sealed envelope or package shall be submitted. The sealed envelope/package must contain the required forms and price proposals, where applicable, and will be evaluated and deemed responsive or non-responsive. All late responses will be returned to the bidder and will not be opened. Bids (Envelope/Package) shall contain one (1) original and one (1) digital (CD or flash drive) version unless otherwise indicated in the legal advertisement and shall be mailed or delivered as set forth in the preceding paragraph in one (1) SEALED ENVELOPE/PACKAGE. The envelope/ package shall be clearly marked on the outside to include the bid project name, bid number, name and address of the bidder.

95. **STATE LICENSING REQUIREMENTS**

All entities defined under Chapters 607, 608, 617 or 620, Florida Statutes, seeking to do business with the City shall be on file and in good standing with the State of Florida's Department of State. Prior to making an offer, the bidder shall have met the license, certification, and any other requirements of the state, county, city and/or other agency of authority with jurisdiction in such matters and should provide copies of documentation that evidence such qualifications with the response to the solicitation; and, that the bidder shall provide follow-up evidence that the bidder maintains such credentials throughout the period of the agreement. A copy of a current certificate of authority from the Secretary of State authorizing the bidder/responder to do business in the State of Florida, or other evidence of legal authority to do business in the state, county, city and/or any other agency of authority should be provided with your response to the solicitation. Information concerning certification with the Secretary of State may be obtained at https://dos.myflorida.com/sunbiz/manage-business/certification/. Contract documents shall be executed by the entity's duly authorized officer as evidenced by entity records.

96. **SUBCONTRACTING**

The awarded contractor will not sub-contract or enter into any subcontracting agreements pertaining to this contract, without obtaining written approval from the City of Port Orange.

97. **SUPPLEMENTAL MATERIALS**

Bidders are responsible for including all pertinent product data in the returned bid package. Literature, brochures, data sheets, specification information, completed forms requested as part of the bid package and any other facts which may affect the evaluation and subsequent contract award should be included. Materials such as legal documents and contractual agreements that the bidder wishes to include as a condition of the bid must also be in the returned bid package. Failure to include all necessary and proper supplemental materials may be cause to reject the entire bid.

98. **TAXES**

The City of Port Orange is exempt from all federal excise, state and local taxes unless otherwise stated in this document. A Tax Exemption Certificate will be furnished upon written request to the City of Port Orange Purchasing Division.

99. **TERM CONTRACTS**

Acceptance by the City of Port Orange of bidder's offer shall be limited to the terms herein unless expressly agreed in writing by the City. If the contract is intended to cover a specific time-period, the term will be given in the bid specifications.

100. **TERMINATION**

Owner Termination for Cause:

A. The occurrence of any one or more of the following events will constitute a default by Contractor and justify termination for cause:

1. Contractor's persistent failure to perform the Work in accordance with the Contract Documents (including, but not limited to, failure to supply sufficient skilled workers or suitable materials or equipment, or failure to adhere to the Progress Schedule);
2. Failure of Contractor to perform or otherwise to comply with a material term of the Contract Documents;
3. Contractor's disregard of Laws or Regulations of any public body having jurisdiction;
4. Contractor's repeated disregard of the authority of Owner or Engineer:
5. Contractor's failure to timely pay Subcontractors and Suppliers after it receives payment from Owner, or
6. Contractor's failure to obtain or maintain the insurance required of it in the Contract.

B. If one or more of the events identified in Paragraph A, hereinabove, occurs, then after giving Contractor (and any surety) 5 days' written notice that Owner is considering a declaration that Contractor is in default and termination of the Contract, Owner may proceed to:

1. declare Contractor to be in default, and give Contractor (and any surety) written notice that the Contract is terminated; and
2. enforce the rights available to Owner under any applicable performance bond.

C. Subject to the terms and operation of any applicable performance bond, if Owner has terminated the Contract for cause, Owner may exclude Contractor from the Site, take possession of the Work, incorporate in the Work all materials and equipment stored at the Site or for which Owner has paid Contractor but which are stored elsewhere, and complete the Work as Owner may deem expedient.

D. Owner may not proceed with termination of the Contract under Paragraph B, hereinabove, if Contractor within 5 days of receipt of notice of intent to terminate begins to correct its failure to perform and proceeds diligently to cure such failure.

E. If Owner proceeds as provided in Paragraph B, hereinabove, Contractor shall not be entitled to receive any further payment until the Work is completed. If the unpaid balance of the Contract Price exceeds the cost to complete the Work, including all related claims, costs, losses, and damages (including but not limited to all fees and charges of engineers, architects, attorneys, and other professionals) sustained by Owner, such excess will be paid to Contractor. If the cost to complete the Work including such related claims, costs, losses, and damages exceeds such unpaid balance, Contractor shall pay the difference to Owner. When exercising any rights or remedies under this paragraph, Owner shall not be required to obtain the lowest price for the Work performed.

F. Where Contractor's services have been so terminated by Owner, the termination will not affect any rights or remedies of Owner against Contractor then existing or which may thereafter accrue, or any rights or remedies of Owner against Contractor or any surety under any payment bond or performance bond. Any retention or payment of money due Contractor by Owner will not release Contractor from liability.

G. If and to the extent that Contractor has provided a performance bond under the provisions, the provisions of that bond will govern over any inconsistent provisions of Paragraphs B and D, hereinabove.

Owner Termination for Convenience:

A. Upon 5 days' written notice to Contractor and Engineer, Owner may, without cause and without prejudice to any other right or remedy of Owner, terminate the Contract. In such case, Contractor shall be paid for (without duplication of any items):

1. completed and acceptable Work executed in accordance with the Contract Documents prior to the effective date of termination, including fair and reasonable sums for overhead and profit on such Work;
2. expenses sustained prior to the effective date of termination in performing services and furnishing labor, materials, or equipment as required by the Contract Documents in connection with uncompleted Work, plus fair and reasonable sums for overhead and profit on such expenses; and
3. other reasonable expenses directly attributable to termination, such as demobilization expenses, and including costs incurred to prepare a termination for convenience cost proposal. Attorneys' fees, accountant fees, home office overhead and similar expenses shall not be deemed reasonable expenses.

B. Contractor shall not be paid for any loss of anticipated profits or revenue, post-termination overhead costs, or other economic loss arising out of or resulting from such termination.

Contractor May Stop Work or Terminate:

A. If, through no act or fault of Contractor, (1) the Work is suspended for more than 90 consecutive days by Owner or under an order of court or other public authority, or (2) Engineer fails to act on any Application for Payment within 30 days after it is submitted, or (3) Owner fails for 30 days to pay Contractor any sum finally determined to be due, then Contractor may, upon 7 days' written notice to Owner and Engineer, and provided Owner or Engineer do not remedy such suspension or failure within that time, terminate the contract and recover from Owner payment on the same terms as provided in paragraph for Owner Termination for Convenience, hereinabove. Contractor, however, cannot terminate the Contract due to any dispute (i) concerning the amount of payment due Contractor or (ii) any amounts Owner is withholding from Contractor.

B. In lieu of terminating the Contract and without prejudice to any other right or remedy, if Engineer has failed to act on an Application for Payment within 30 days after it is submitted, or Owner has failed for 30 days to pay Contractor any sum finally determined to be due, Contractor may, 7 days after written notice to Owner and Engineer, stop the Work until payment is made of all such amounts due Contractor, including interest thereon. The provisions of this paragraph are not intended to preclude Contractor from submitting a Change Proposal for an adjustment in Contract Price or Contract Times or otherwise for expenses or damage directly attributable to Contractor's stopping the Work as permitted by this paragraph. Contractor, however, cannot stop the Work due to any dispute (i) concerning the amount of payment due Contractor or (ii) any amounts Owner is withholding from Contractor.

101. **TITLE TRANSFER**

Title and Risk of Loss of goods shall not pass to City of Port Orange until City of Port Orange actually receives and takes possession of the goods at the point or points of delivery. Receiving times may vary with the using department. Generally, deliveries may be made between 8:30 a.m. and 3:00 p.m., Monday through Friday. The contractor is advised to consult the using department for instructions. The place of delivery shall be specified in the bid specification and/or on the purchase order as a "Deliver To:" address.

102. **UNBALANCED BID**

A mathematically unbalanced bid is where a bidder places a high price on some items and a low price on other items in a unit price contract. A bid is materially unbalanced when there is reasonable doubt that acceptance of a mathematically unbalanced bid will result in the lowest overall cost to the City. Unbalanced bids will be rejected if the prices are deemed materially unbalanced.

103. **USE OF SOLICITATION FORMS**

The bidder shall complete the appropriate solicitation form(s) included in the solicitation. All blanks on the solicitation forms shall be completed. If a question or confirmation is not applicable, it should be answered with an "N/A." Supplemental information may be attached to the solicitation forms. Failure to fully complete the

appropriate solicitation forms may result in disqualification of the response. If additional space for a response is required, attach an additional page to the page on which the question is stated. Clearly identify the number of the question to which the response is attached. Further, if additional solicitation form pages are needed, photocopy or replicate as appropriate, and attach such additional pages to the page on which the question or chart is stated. The signature of the Authorized Person or entity must be that of an officer, partner or a sole proprietor of the entity making the response. The original response, and each copy submitted shall contain an original signature on the Bidder's Acknowledgement Form contained in each solicitation.

104. **VARIANCES**

For purposes of response evaluation, bidders must indicate any variances, no matter how slight, contained in the response. No variations or exceptions by a bidder will be considered or deemed a part of the response submitted unless such variances or exceptions are listed in the response and referenced in the space provided on the response pages. If variances are not stated, or referenced as required, it will be assumed that the product or service complies with the City's terms, conditions and specifications. By receiving a response, the City does not necessarily accept any variances contained in the response. All variances submitted are subject to review and approval by the City. If any response contains material variances that, in the City's sole opinion, make that response conditional in nature, the City reserves the right to reject the response or part of the response that is declared, by the City, as conditional.

105. **WAIVER OF IRREGULARITIES**

The City of Port Orange reserves the right to waive and/or reject any non-substantial irregularity in responses received whenever such waiver or rejection is in the best interest of the City and/or it does not meet the minimum requirements set forth. All reasonably responsive responses will be considered. However, the City reserves the right to waive formalities or informalities in responses, to reject, with or without cause, any or all responses or portions of responses, or to interview or not interview individual bidders, and to accept any responses or portions of responses deemed to be in the best interest of the City. The City Council shall grant the City Manager to waive any and all non-substantial irregularities in any and all formal solicitations. (Code 1981, § 8-29; Ord. No. 2015-17, § 1, 5-19-2015)

SECTION 6 – SPECIAL REQUIREMENTS/INSTRUCTIONS

PERIOD OF OFFER VALIDITY:

Bids offered in this ITB must remain firm for a period of one-hundred-twenty (120) days from the ITB opening date.

AWARD RECOMMENDATION:

It is the intent of the City to award a contract to the lowest responsive and responsible bidder as outlined in Section 2 and (Attachment 1) Schedule of Unit Pricing.

CONTRACT TERM/COMPLETION TIME:

The date of commencement of the Work shall be fixed in a notice to proceed issued by the City. The contractor shall achieve Substantial Completion of the Work not later than two hundred forty-six **(246)** calendar days from the notice to proceed and Final Completion two hundred seventy **(270)** calendar days from the notice to proceed.

ELIGIBILITY OF BIDDER:

To be eligible to respond to this ITB, the bidders must demonstrate proof of prior experience working with the services described in this ITB. Please provide eligibility experience with your submittal by completing Form 7.6 Statement of Bidder's Qualifications in its entirety.

Prime contractor is to be prequalified in the work class: Sidewalk and Flexible Paving.

PROOF OF E-VERIFY REGISTRATION

Bidders who do not include proof of E-Verify registration with form 7.10 City of Port Orange Contractor E-Verify Affidavit may be deemed non-responsive. Include printed pages from the E-Verify website showing company name and E-Verify registration number.

LICENSES AND PERMITS

Contractor is responsible for all applicable local and state licenses, permits and fees.

MAINTENANCE

The paragraph entitled **MAINTENANCE** (#58 of Section 5 - General Terms and Conditions) does NOT apply to this Invitation to Bid.

PAYMENT & PERFORMANCE BOND

The bidder must be able to obtain payment and performance bonds from a surety company licensed in Florida and must submit proof of their present bonding capacity with their bid submittal package in the form of a current (not older than 3 months) letter from bidder's bonding agent. Bidder's bonding capacity must be equal to or greater than 100% of the total amount bid. Bidders who do not include their present bonding capacity letter in their bid package may be deemed non-responsive.

Upon award, the successful bidder will be required to furnish and pay for a Payment and Performance Bond equal to one hundred percent (100%) of the contract amount to be recorded by the City, with the Clerk of the Circuit Court, Volusia County, Florida. After recording, the City will furnish to the contractor the recording information for the bond to evidence that the contractor has met the requirement of Florida law. The City will bill the cost of recording to the contractor.

BID BOND:

A certified check or bank draft, payable to the City of Port Orange, FL or a satisfactory bid bond executed by the bidder and an acceptable surety in the amount equal to (5%) of the total amount of the bid shall be submitted with each bid. If submitting a bid bond in lieu of a certified check or bank draft, the **original** bid bond must be included with bid submittal. If submitting a bid bond in lieu of a certified check or bank draft, bidders who do not include their **original** bid bond with their submittal may be deemed non-responsive.

ADDITIONAL INDEMNIFICATION REQUIREMENTS:

The following is hereby added to Item #47, Section 5 – General Terms and Conditions: The following indemnification will be included in all contracts with contractors, subcontractors, consultants, or subconsultants (each referred to as "Entity" for the purposes of the below indemnification) who perform work in connection with this project:

"To the extent provided by law, [ENTITY] shall indemnify, defend, and hold harmless the City of Port Orange and the State of Florida, Department of Transportation, including the Department's officers, agents, and employees, against any actions, claims, or damages arising out of, relating to, or resulting from negligent or wrongful act(s) of [ENTITY], or any of its officers, agents, or employees, acting within the scope of their office or employment, in connection with the rights granted to or exercised by [ENTITY].

The foregoing indemnification shall not constitute a waiver of the Department's or City's sovereign immunity beyond the limits set forth in Florida Statutes, Section 768.28. Nor shall the same be construed to constitute agreement by [ENTITY] to indemnify the City of Port Orange for the negligent acts or omissions of the City of Port Orange, its officers, agents, or employees, or third parties. Nor shall the same be construed to constitute agreement by [ENTITY] to indemnify the Department for the negligent acts or omissions of the Department, its officers, agents, or employees, or third parties. This indemnification shall survive the termination of this Agreement."

ADDITIONAL INSURANCE REQUIREMENTS:

The following language is hereby added to Item #51, Section 5 – General Terms and Conditions: In addition to naming the City as additional named insured, the awarded firm must also list the State of Florida, Department of Transportation (FDOT) as additional named insured.

SAFETY:

Contractor will comply with all applicable OSHA, State of Florida Safety Regulations and comply with all construction safety requirements of local authorities having jurisdiction. Contractor shall exercise all due caution to exclude the public from the work area and especially from contact with any hazardous materials.

REPAIR OF DAMAGES:

It is the responsibility of the contractor to repair any damages incurred in the area that are directly related to the project. When damages occur, the City of Port Orange Representative is to be notified and shall inspect the repairs upon completion.

NON-DISCRIMINATION:

The following is hereby added to Item #60, Section 5 – General Terms and Conditions: In accordance with Section 287.134, Florida Statutes, an entity or affiliate who has been placed on the Discriminatory Vendor List, kept by the Florida Department of Management Services, may not submit a bid on a contract to provide goods or services to a public entity; may not submit a bid on a contract with a public entity for the construction or repair of a public building or public work; may not submit bids on leases of real property to a public entity; may not be awarded or perform work as a contractor, supplier, subcontractor or consultant under a contract with any public entity; and may not transact business with any public entity.

TAXES:

The paragraph entitled **TAXES** (#98 of Section 5 - General Terms and Conditions) does NOT apply to this Invitation to Bid. The City's tax-exempt status does not apply to this project.

[Remainder of page left intentionally blank]

SECTION 7 – REQUIRED FORMS

FORM 7.1 – BID SUBMITTAL CHECKLIST

_____ Form 7.2 – Bidder's Acknowledgement Form

_____ Form 7.3 – Addendum and Change Order Procedure Acknowledgement

_____ Form 7.4 – Drug Free Preference Statement

_____ Form 7.5 – Public Entity Crimes Statement

_____ Form 7.6 – Statement of Bidder's Qualifications

_____ Form 7.7 – Professional References for Previous Experience

_____ Form 7.8 – List of Subcontractors

_____ Form 7.9 – Scrutinized Companies Certification

_____ Form 7.10 – E-Verify Affidavit

_____ Form 7.11 – Affidavit of Compliance with Section 287.138, Florida Statutes

_____ Form 7.12 – No Submittal Response Form

_____ (Attachment 1) – Schedule of Unit Pricing

_____ Affidavit Regarding Labor and Services

_____ Current Bonding Capacity Letter (as outlined in Section 6)

_____ Copy of all currently held Licenses (Contractor, Sunbiz, etc.)

_____ Original Bid Bond

_____ Submission of one (1) original marked "ORIGINAL" and one (1) digital (flash drive) version in PDF format

BY: _____
Name of Business

_____
Authorized Signature

_____
Date

This document must be completed and returned with your Submittal

FORM 7.2 – BIDDER'S ACKNOWLEDGEMENT FORM

I have carefully examined the Invitation to Bid (ITB), Instructions to Bidders, General and/or Special Conditions, Specifications and any other documents accompanying or made a part of this invitation.

I hereby propose to furnish the goods or services specified in the ITB at the prices or rates as finally negotiated. I agree that my bid will remain firm for a period of up to one-hundred-twenty (120) days in order to allow the City of Port Orange adequate time to evaluate the proposed bid. Furthermore, I agree to abide by all conditions of the ITB.

I certify that all information contained in the bid is truthful to the best of my knowledge and belief. I further certify that I am duly authorized to submit this bid on behalf of the Bidder/Contractor as its act and deed and that the Bidder/Contractor is ready, willing and able to perform if awarded the contract.

I further certify that this bid is made without prior understanding, contract, connection, discussion or collusion with any person, firm or corporation submitting a bid for the same product or service; no officer, employee or agent of the City of Port orange City Council or of any other Bidder interested in said ITB; and that the undersigned executed this Bidder's Acknowledgement with full knowledge and understanding of the matters therein contained and was duly authorized to do so.

I further certify that having read and examined the specifications and documents for the designated services and understanding the general conditions for the contract under which services will be performed, does hereby propose to furnish all labor, equipment and material to provide the services set forth in the ITB.

I hereby declare that the following listing states any clarifications, any and all variations from and exceptions to the requirements of the specifications and documents. The undersigned further declares that the "work" will be performed in strict accordance with such requirements and understands that any exceptions to the requirements of the specifications and documents may render the bid non-responsive.

NO EXCEPTIONS ALLOWED AFTER THE BID IS SUBMITTED:

Please check one: ☐I take NO exceptions. ☐Exceptions (list below; add additional pages if necessary):

_____

_____

_____ _____

Name of Business Mailing Address

_____ _____

Authorized Signature City, State & Zip Code

_____ _____

Printed Name and Title Telephone Number

_____ _____

Federal Identification No. E-mail Address

STATE OF:_____ COUNTY OF: _____

The foregoing instrument was acknowledged before me by means of ☐physical presence or ☐online notarization, this

_____ day of _____, 2025, by_____ and who:

☐Is personally known to me; or ☐ has produced _____ as identification.

_____Notary Public, State of _____

Printed, typed or stamped name, commission and expiration:

This document must be completed and returned with your Submittal

FORM 7.3 – ADDENDUM AND CHANGE ORDER PROCEDURE ACKNOWLEDGEMENT

ADDENDUM ACKNOWLEDGEMENT

I have carefully examined the Invitation to Bid (ITB), Instructions to Bidders, General and/or Special Conditions, Specification and any other documents accompanying or made a part of this ITB.

I acknowledge receipt and incorporation of the following addenda and the cost, if any, of such revisions has been included in the price of the bid proposal.

Addendum#_____ Date:_____ Addendum#_____ Date:_____

Addendum#_____ Date:_____ Addendum#_____ Date:_____

CHANGE ORDER PROCEDURE ACKNOWLEDGEMENT

If awarded the Contract for this Solicitation, I acknowledge that no oral statement of any person shall modify or otherwise change or affect the terms, conditions or specifications stated in the resulting contract. All change order requests shall be made in writing by the Contractor for review by the Contract Administrator for the City of Port Orange. No work shall be performed as set forth in the change order until the Contractor receives an executed Purchase Order for the requested change.

I acknowledge the above statements regarding Addendum Acknowledgement and Change Order Procedures:

_____
Name of Business

_____
Authorized Signature

_____
Printed Name and Title

STATE OF:_____ COUNTY OF: _____

The foregoing instrument was acknowledged before me by means of ☐physical presence or ☐online notarization, this

_____ day of _____, 2025, by_____ and who:

☐Is personally known to me; or ☐ has produced _____ as identification.
_____

Notary Public, State of _____
Printed, typed or stamped name, commission and expiration:

This document must be completed and returned with your Submittal

FORM 7.4 – DRUG-FREE PREFERENCE STATEMENT

IDENTICAL TIE BIDS – Preference shall be given to businesses with drug-free workplace programs. Whenever two or more bids, proposals, statements or replies are equal with respect to price, quality and service are received by the City for procurement of commodities or contractual services, a bid received from a business that certifies that it has implemented a drug-free workplace program shall be given preference in the award process. Established procedures for processing tie bids will be followed if none of the tied bidders have a drug-free workplace program.

In order to have a drug-free workplace program, a business shall:

1. Publish a statement notifying employees that the unlawful manufacture, distribution, dispensing, possession or use of a controlled substance is prohibited in the workplace and specifying the actions that will be taken against employees for violations of such prohibition.

2. Inform employees about the dangers of drug abuse in the workplace, the business's policy of maintaining a drug-free workplace, any available drug counseling, rehabilitation and employee assistance programs and the penalties that may be imposed upon employees for drug abuse violations.

3. Give each employee engaged in providing the commodities or contractual services that are under a bid a copy of the statement specified in subsection (1).

4. In the statement specified in subsection (1), notify the employees that, as a condition of working on the commodities or contractual services that are under the bid, the employee will abide by the terms of the statement and will notify the employer of any conviction of, or plea of guilty or nolo contendere to, any violation of chapter 893 or of any controlled substance the law of the United States or any state, for a violation occurring in the workplace no later than five (5) days after such conviction.

5. Impose a sanction on or require the satisfactory participation in a drug abuse assistance or rehabilitation program if such is available in the employee's community, by an employee who is so convicted.

6. Make a good faith effort to continue to maintain a drug-free workplace through implementation of Section 287.087, Florida Statutes.

As an authorized representative of the firm, I certify that this firm complies fully with the above requirements.

_____
Name of Business

_____
Authorized Signature

_____
Printed Name and Title

STATE OF:_____ COUNTY OF: _____

The foregoing instrument was acknowledged before me by means of ☐physical presence or ☐online notarization, this _____ day of _____, 2025, by_____ and who:

☐Is personally known to me; or ☐ has produced _____ as identification.

_____
Notary Public, State of _____
Printed, typed or stamped name, commission and expiration:

This document must be completed and returned with your Submittal

FORM 7.5 – SWORN STATEMENT ON PUBLIC ENTITY CRIMES
UNDER SECTION 287.133(3)(A), FLORIDA STATUTES
(To be signed in the presence of a notary public or other authorized to administer oaths.)

Before me, the undersigned Authority, personally appeared affiant_____, who, being by me first duly sworn, made the following statement:

1. The business address of _____(name of Offeror or business) is

   _____.

2. My relationship to _____(name of Offeror or business) is _____

   _____(relationship such as sole proprietor, partner, president, vice president.)

3. I understand that a public entity crime as defined in Section 287.133 of the Florida Statutes includes a violation of any state or federal law by a person with respect to and directly related to the transaction of business with any public entity in Florida or with an agency or political subdivision of any other state or with the United States, including, but not limited to, any proposal or contract for goods or services to be provided to any public entity or such and agency or political subdivision and involving antitrust, fraud, theft, bribery, collusion, racketeering, conspiracy or material misrepresentation.
4. I understand that "convicted" or "conviction" is defined by the Florida Statutes to mean a finding of guilt or a conviction of a public entity crime, with or without an adjudication of guilt, in any federal or state trial court of record relating to charges brought by indictment or information after July 1, 1989, as a result of a jury verdict, non-jury trial, or entry of a plea of guilt or nolo contendere.
5. I understand that "affiliate" is defined by the Florida Statutes to mean (1) a predecessor or successor of a person or a corporation convicted of a public entity crime, or (2) an entity under the control of any natural person who is active in the management of the entity and who has been convicted of a public entity crime, or (3) those officers, directors, executives, partners, shareholders, employees, members, and agents who are active in the management of an affiliate, or (4) a person or corporation who knowingly entered into a joint venture with a person who has been convicted of a public entity crime in Florida during the preceding 36 months.
6. Neither the Offeror or contractor, nor any officer, director, executive, partner, shareholder, employee, member or agent who is active in the management of the Offeror or contractor, nor any affiliate of the Offeror or contractor has been convicted of a public entity crime subsequent to July 1, 1989. **(Draw a line through paragraph 6 if paragraph 7 below applies.)**
7. There has been a conviction of a public entity crime by the Offeror or contractor, or an officer, director, executive, partner, shareholder, employee, member or agent of the Offeror or contractor who is active in the management of the Offeror or contractor or an affiliate of the Offeror or contractor. A determination has been made pursuant to Section 287.133(3) by order of the Division of Administrative Hearings that it is not in the public interest for the name of the convicted person or affiliate to appear on the convicted bidder list. The name of the convicted person or affiliate is: _____. A copy of the order of the Division Administrative Hearing is attached. **(Draw a line through paragraph 7 if paragraph 6 above applies)**

_____
Name of Business

_____
Authorized Signature

STATE OF:_____

COUNTY OF: _____

_____
Printed Name and Title

The foregoing instrument was acknowledged before me by means of ☐physical presence or ☐online notarization, this _____ day of _____, 2025, by_____ and who:

☐Is personally known to me; or ☐ has produced _____ as identification.

_____Notary Public, State of _____
Printed, typed or stamped name, commission and expiration:

This document must be completed and returned with your Submittal

FORM 7.6 – STATEMENT OF BIDDER'S QUALIFICATIONS

The undersigned warrants that he or she is duly authorized to complete this document, and hereby affirms that the information contained in Form 7.6 is complete, true and correct to the best of his or her knowledge and belief. If necessary, question may be answered on separate paper and attached with any additional information that may be pertinent.

A. Name of Bidder: _____

B. Permanent main office address: _____

C. Date organized: _____

D. If a corporation, where incorporated: _____

E. How many years have you been engaged in the business under your present firm or trade name? _____

F. Contracts on hand: (List these, showing amount of each contract and the appropriate anticipated dates of completion.) **USE SEPARATE SHEET & ATTACH TO SUBMITTAL**

G. General character of work performed by your company: _____

H. Have you ever failed to complete any work awarded to you? If so, where and why?_____

I. Have you ever defaulted on a contract? If so, where and why? _____

J. List your major equipment currently owned or leased: **USE SEPARATE SHEET & ATTACH TO SUBMITTAL**

K. Background and experience of the principal members of your organization, including the officers: USE **SEPARATE SHEET & ATTACH TO SUBMITTAL**

L. Credit currently available: $_____

M. Give bank name, contact name and phone number: _____

N. Will you, upon request, fill out a detailed financial statement and furnish any other information that may be required by the Owner? ☐Yes ☐No

The undersigned hereby authorizes and requests any person, firm or corporation to furnish any information requested by the Owner in verification of the recitals compromising the Statement of Bidder's Qualifications.

_____
Name of Business

_____
Authorized Signature

STATE OF:_____

COUNTY OF: _____

_____
Printed Name and Title

The foregoing instrument was acknowledged before me by means of ☐physical presence or ☐online notarization, this _____ day of _____, 2025, by_____ and who:

☐Is personally known to me; or ☐ has produced _____ as identification.

_____Notary Public, State of _____

Printed, typed or stamped name, commission and expiration:

This document must be completed and returned with your Submittal

FORM 7.7 – PROFESSIONAL REFERENCES FOR PREVIOUS EXPERIENCE

The Bidder proposes that they are qualified to perform the referenced work and has successfully done so on recent projects similar in nature and size. The City reserves the right to check references and confirm information provided herein. **Please provide three (3) current and correct references from clients for similar services. (DO NOT include the City of Port Orange)**

1. Company Name: _____

   Contact Person: _____

   City, State: _____

   Telephone Number: _____

   Email Address: _____

   Description of goods/services provided: _____

   Contract Amount: _____

   Start/End Date of Contract: _____

2. Company Name: _____

   Contact Person: _____

   City, State: _____

   Telephone Number: _____

   Email Address: _____

   Description of goods/services provided: _____

   Contract Amount: _____

   Start/End Date of Contract: _____

3. Company Name: _____

   Contact Person: _____

   City, State: _____

   Telephone Number: _____

   Email Address: _____

   Description of goods/services provided: _____

   Contract Amount: _____

   Start/End Date of Contract: _____

This document must be completed and returned with your Submittal.

FORM 7.7 – PROFESSIONAL REFERENCES FOR PREVIOUS EXPERIENCE (page 2)

LISTING OF PREVIOUS EXPERIENCE
COMMERCIAL CLIENT LIST

The Bidder proposes that they are qualified to perform the referenced work and has successfully done so on recent projects similar in nature and size. A minimum of three (3) projects must be listed below. The Owner reserves the right to check references and confirm information provided herein.

List clients to whom you currently provide or have in the past provided equal or similar services to those required under the City's contract as outlined in this bid package. A minimum of three (3) projects shall be listed below in order to bid on this contract. The Owner reserves the right to check references and confirm information provided herein.

1. Contact Name: _____

   Phone: _____

   Current Client: ☐Yes ☐ No

   Number of years of service provided: _____

   Description of service: _____

   _____

2. Contact Name: _____

   Phone: _____

   Current Client: ☐Yes ☐ No

   Number of years of service provided: _____

   Description of service: _____

   _____

3. Contact Name: _____

   Phone: _____

   Current Client: ☐Yes ☐ No

   Number of years of service provided: _____

   Description of service: _____

   _____

This document must be completed and returned with your Submittal.

FORM 7.8 – LISTING OF SUBCONTRACTORS

The Bidder proposes that the following subcontractors are qualified to perform the referenced work and have successfully done so on recent projects similar in nature and size. All subcontractors whose work product accounts for 5% or more of the total contract value shall be listed. Upon approval of subcontractors listed, the successful **Bidder shall not substitute subcontractors without approval from the City Representative**. Bidder shall attach additional sheets as necessary.

Subcontractor No. 1

Name: _____

Description of Work: _____

Percent of Contract Price: _____

Previous Experience Together: ☐Yes ☒No

Subcontractor No. 2

Name: _____

Description of Work: _____

Percent of Contract Price: _____

Previous Experience Together: ☐Yes ☐No

Subcontractor No. 3

Name: _____

Description of Work: _____

Percent of Contract Price: _____

Previous Experience Together: ☐Yes ☐No

Subcontractor No. 4

Name: _____

Description of Work: _____

Percent of Contract Price: _____

Previous Experience Together: ☐Yes ☐No

Subcontractor No. 5

Name: _____

Description of Work: _____

Percent of Contract Price: _____

Previous Experience Together: ☐Yes ☐No

This document must be completed and returned with your submittal

FORM 7.9 SCRUTINIZED COMPANIES CERTIFICATION

(To be signed in the presence of a notary public or other officer authorized to administer oaths.)

SCRUTINIZED COMPANIES CERTIFICATION PURSUANT TO SECTION 287.135, FLORIDA STATUTES

I, _____, on behalf
(Print Name and Title)

of_____ ("Company"), certify that _____
(Company Name) (Company Name)

does not:
1. Participate in a boycott of Israel; and
2. Is not on the Scrutinized Companies with Boycott Israel List; and
3. Is not on the Scrutinized Companies with Activities in Sudan List; and
4. Is not on the Scrutinized Companies with Activities in the Iran Petroleum Energy Sector List; and
5. Has not engaged in business operations in Syria.

Submitting a false certification shall be deemed a material breach of contract. The City of Port Orange shall provide notice, in writing, to the Company of the City's determination concerning the false certification. The Company shall have ninety (90) days following receipt of the notice to respond in writing and demonstrate that the determination of false certification was made in error. If the Company does not demonstrate that the City's determination of false certification was made in error, then the City shall have the right to terminate the contract and seek civil remedies pursuant to Florida Statute § 287.135.

Section 287.135, Florida Statutes prohibits the City from: 1) Contracting with companies for goods or services in any amount if at the time of bidding on, submitting a proposal for, or entering into or renewing a contract if the company is on the Scrutinized Companies that Boycott Israel List, created pursuant to Section 215.4725, F.S. or is engaged in a boycott of Israel; and 2) Contracting with companies for goods or services over $1,000,000.00 that are on either the Scrutinized Companies with activities in the Iran Petroleum Energy Sector List, created pursuant to s. 215.473, or are engaged in business operations in Syria.

As the person authorized to sign on behalf of the Company, I hereby certify that the company identified above in the section entitled "Company Name" does not participate in any boycott of Israel, is not listed on the Scrutinized Companies that Boycott Israel List, is not listed on either the Scrutinized Companies with activities in the Iran Petroleum Energy Sector List and is not engaged in business operations in Syria. I understand that pursuant to Section 287.135, Florida Statutes, the submission of a false certification may subject the company to civil penalties, attorney's fees, and/or costs. I further understand that any contract with the City for goods or services may be terminated at the option of the City if the company is found to have submitted a false certification or has been placed on the Scrutinized Companies with Activities in Sudan List or the Scrutinized Companies with Activities in the Iran Petroleum Energy Sector List.

_____ _____
COMPANY NAME SIGNATURE

_____ _____
PRINT NAME TITLE

STATE OF FLORIDA COUNTY OF: _____

The foregoing instrument was acknowledged before me by means of ☐physical presence or ☐online notarization, this _____ day of _____, 2025, by_____ and who:

☐Is personally known to me; or ☐ has produced _____ as identification.

_____Notary Public, State of _____
Printed, typed or stamped name, commission and expiration:

This document to be completed and returned with your Submittal

FORM 7.10 – E-VERIFY AFFIDAVIT

CITY OF PORT ORANGE

CONTRACTOR E-VERIFY AFFIDAVIT

IN ACCORDANCE WITH SECTION 448.095, FLORIDA STATUTES

Project Name: _____

Solicitation Number: _____

I, the undersigned hereby certify that _____ (insert contractor company name) does not employ, contract with or subcontract with an unauthorized alien, and is otherwise in full compliance with Section 448.095, Florida Statutes.

I acknowledge that it is my responsibility to ensure full compliance with Section 448.095, Florida Statutes. I am aware enrollment in the E-Verify system for employers can be done at www.e-verify.gov.

A true and correct copy of _____ (insert contractor company name) proof of registration in the E-Verify system is attached to this Affidavit.

By affixing my signature below, I hereby affirm that I am duly authorized to bind the company reference herein and I will comply with all applicable E-Verify requirements.

_____ _____

Print or Type Name, Title Signature of Affiant

_____ _____

Federal Employer ID Number (FEIN) E-Verify Number

STATE OF FLORIDA

COUNTY OF: _____

The foregoing instrument was acknowledged before me by means of ☐physical presence or ☐online notarization, this _____ day of _____, 2025, by_____ and who:

☐Is personally known to me; or ☐ has produced _____ as identification.

_____Notary Public, State of _____

Printed, typed or stamped name, commission and expiration:

This document to be completed and returned with your Submittal

FORM 7.11 – AFFIDAVIT OF COMPLIANCE WITH SECTION 287.138, FLORIDA STATUTES

AFFIDAVIT OF COMPLIANCE WITH SECTION 287.138, FLORIDA STATUTES CONTRACTING WITH FOREIGN ENTITIES OF CONCERN

The undersigned ("Affiant"), on behalf of the entity listed below ("Entity"), hereby attests under penalty of perjury as follows:

1. Affiant is the _____ of _____
   (Title) (Business Name)
   which does business in the State of Florida, hereinafter called the "Entity".
2. Entity is not owned by the government of a foreign country of concern, as defined in Section 287.138 (1) (c), Florida Statutes.
3. The government of a foreign country of concern does not have a controlling interest in Entity, as defined in Section 287.138 (1)(a), Florida Statutes.
4. Entity is not organized under the laws of, and does not have a principal place of business in, a foreign country of concern.
5. Entity is not owned or controlled by the government of a foreign country of concern.
6. For purposes of this affidavit, a foreign country of concern means the People's Republic of China, the Russian Federation, the Islamic Republic of Iran, the Democratic People's Republic of Korea, the Republic of Cuba, the Venezuelan regime of Nicolas Maduro, or the Syrian Arab Republic, including any agency of or any other entity of significant control of such foreign country of concern, as defined in Section 287.138(1)(c), Florida Statutes.

The undersigned is authorized to execute this affidavit on behalf of the Entity.

Date: _____, 20___ Signed: _____

Entity: _____ Name: _____

Title: _____

STATE OF: _____ COUNTY OF: _____

The foregoing instrument was acknowledged before me by means of ☐physical presence or ☐online notarization, this _____ day of _____, 2025, by_____ and who:

☐Is personally known to me; or ☐ has produced _____ as identification.

_____

Notary Public, State of Florida at Large: (seal)

Printed Name/Seal of Notary, Commission and Expiration Date:

My commission expires: _____

This document must be completed and returned with your Submittal

FORM 7.12 – NO SUBMITTAL RESPONSE FORM

If your company will not be submitting a proposal in response to this solicitation, please complete this form and return via e-mail prior to the solicitation due date established within to:

City of Port Orange
Purchasing Division
1000 City Center Circle
Port Orange, FL 32129
purchdiv@port-orange.org

This information will assist the Purchasing Division in the preparation of future solicitations.

Solicitation: **ITB #25-13 - 439865-3-54-01 SJR2C Loop Trail (Spruce Creek Rd.) From S. of Selin Circle to Herbert Street**

Company Name: _____

Contact Person Name & Title: _____

Address: _____

Telephone: _____ Email Address: _____

Please check a reason for a "no response".

☐Specifications "too tight" or geared toward on brand or manufacturer (please explain below)

☐Insufficient time to respond

☐Specifications unclear (please explain below)

☐We do not offer this product/service or an equivalent

☐Our product schedule does not permit us to perform within stated timeline for the project

☐Unable to meet specifications

☐Unable to meet bond requirements

☐Unable to hold prices firm throughout the term of the contract period

☐Unable to meet insurance requirements

☐Other: _____

Print Name: _____

Signature: _____ Date:_____

Additional Information:

_____

_____

_____

_____

If submitting this form, only this form needs to be returned. It is not necessary to return the entire solicitation package.

(ATTACHMENT 1) SCHEDULE OF UNIT PRICING
CITY OF PORT ORANGE
ITB #25-13
439865-3-54-01 SJR2C Loop Trail (Spruce Creek Rd.) form South of Selin Circle to Herbert Street
Completed (Attachment 1) Schedule of Unit Pricing MUST be included with Bid Submission

Bidders are required to complete all fields shaded in green.

(ATTACHMENT 1) SCHEDULE OF UNIT PRICING MUST BE SIGNED

NAME OF BUSINESS:	
CONTACT PERSON:	
EMAIL ADDRESS:	
AUTHORIZED SIGNATURE:	

ALL UNIT PRICING IN ACCORDANCE WITH SPECIFICATIONS - AWARD WILL BE MADE BASED ON GRAND TOTAL PRICING FOR ALL ITEMS

BID ITEMS - PER SECTION 3 - SCOPE OF WORK

ITEM #	ITEM DESCRIPTION	QTY	UNIT of MEASURE	UNIT PRICE	EXTENDED PRICE
0101 1	MOBILIZATION	1	LS	$ -	$ -
0102 1	MAINTENANCE OF TRAFFIC	1	LS	$ -	$ -
0104 10 3	SEDIMENT BARRIER	5,168	LF	$ -	$ -
0104 11	FLOATING TURBIDITY BARRIER	200	LF	$ -	$ -
0104 18	INLET PROTECTION SYSTEM	3	EA	$ -	$ -
0110 1 1	CLEARING & GRUBBING	0.689	AC	$ -	$ -
0110 2 2	SELECTIVE CLEARING AND GRUBBING, AREAS WITH TREES TO REMAIN	0.529	AC	$ -	$ -
0110 23	TREE REMOVAL	5	EA	$ -	$ -
0110 4 10	REMOVAL OF EXISTING CONCRETE	189	SY	$ -	$ -
0120 1	REGULAR EXCAVATION	68.0	CY	$ -	$ -
0120 6	EMBANKMENT	215.0	CY	$ -	$ -
0160 4	TYPE B STABILIZATION	1,038	SY	$ -	$ -
285701-A	DENSE GRADED AGGREGATE BASE (98% MOD PROCTOR DENSITY) 3" THICK	1,038	SY	$ -	$ -
0334 1 12	SUPERPAVE ASPHALTIC CONC, TRAFFIC B	342.5	TN	$ -	$ -
0400 0 11	CONCRETE CLASS NS, GRAVITY WALL INDEX 400-011	83.3	CY	$ -	$ -
0425 1521	INLETS, DT BOT, TYPE C,<10'	3	EA	$ -	$ -
0425 5	MANHOLE, ADJUST	1	EA	$ -	$ -
0430174118	PIPE CULVERT, OPTIONAL MATERIAL, ROUND, 18"SD	131	LF	$ -	$ -
0430174124	PIPE CULVERT, OPTIONAL MATERIAL, ROUND, 24"SD	29	LF	$ -	$ -
0430982125	MITERED END SECTION, OPTIONAL ROUND, 18" CD	3	EA	$ -	$ -
0430982129	MITERED END SECTION, OPTIONAL ROUND, 24" CD	1	EA	$ -	$ -
0430984125	MITERED END SECTION, OPTIONAL ROUND, 18" SD	1	EA	$ -	$ -
0515 1 2	PIPE HANDRAIL - GUIDERAIL, ALUMINUM	308	LF	$ -	$ -
0520 1 10	CONCRETE CURB & GUTTER, TYPE F	180	LF	$ -	$ -
0522 1	CONCRETE SIDEWALK AND DRIVEWAYS, 4" THICK	485	SY	$ -	$ -
0522 2	CONCRETE SIDEWALK AND DRIVEWAYS, 6" THICK	284	SY	$ -	$ -
0527 2	DETECTABLE WARNINGS	287	SF	$ -	$ -
0570 1 2	PERFORMANCE TURF, SOD	2,558	SY	$ -	$ -
0630 2 11	CONDUIT, FURNISH & INSTALL, OPEN TRENCH	364	LF	$ -	$ -
0630 2 12	CONDUIT, FURNISH & INSTALL, DIRECTIONAL BORE	120	LF	$ -	$ -
0630 2 14	CONDUIT, FURNISH & INSTALL, ABOVEGROUND	90	LF	$ -	$ -
0630 2 15	CONDUIT, FURNISH & INSTALL, BRIDGE MOUNT	697	LF	$ -	$ -
0632 7 2	SIGNAL CABLE- REPAIR/REPLACE/OTHER, FURNISH & INSTALL	50	LF	$ -	$ -
0633 6	FIBER OPTIC CABLE LOCATOR	1	DA	$ -	$ -
0635 2 11	PULL & SPLICE BOX, F&I, 13" x 24" COVER SIZE	15	EA	$ -	$ -
0635 3 11	JUNCTION BOX, FURNISH & INSTALL, AERIAL	12	EA	$ -	$ -
0639 1112	ELECTRICAL POWER SERVICE, F&I, OVERHEAD METER PURCHASED BY CONTRACTOR FROM POWER COMPANY	4	AS	$ -	$ -

ITEM #	ITEM DESCRIPTION	QTY	UNIT of MEASURE	UNIT PRICE	EXTENDED PRICE
0639 2 1	ELECTRICAL SERVICE WIRE, FURNISH & INSTALL	360	LF	$ -	$ -
0639 3 11	ELECTRICAL SERVICE DISCONNECT, F&I, POLE MOUNT	1	EA	$ -	$ -
0641 2 12	PRESTRESSED CONCRETE POLE, F&I, TYPE P-II SERVICE POLE	4	EA	$ -	$ -
0646 1 11	ALUMINUM SIGNALS POLE, PEDESTAL	2	EA	$ -	$ -
0646 1 12	ALUMINUM SIGNALS POLE, FURNISH & INSTALL PEDESTRIAN DETECTOR POST	6	EA	$ -	$ -
0653 1 11	PEDESTRIAN SIGNAL, FURNISH & INSTALL LED COUNTDOWN, 1 WAY	2	AS	$ -	$ -
0653 1 60	PEDESTRIAN SIGNAL, REMOVE PED SIGNAL- POLE/PEDESTAL TO REMAIN	2	AS	$ -	$ -
0654 2 12	MIDBLOCK CROSSWALK: RECTANGULAR RAPID FLASHING BEACON, FURNISH & INSTALL-AC, COMPLETE SIGN ASSEMBLY- BACK TO BACK	6	AS	$ -	$ -
0665 1 11	PEDESTRIAN DETECTOR, FURNISH & INSTALL, STANDARD	2	EA	$ -	$ -
0665 1 60	PEDESTRIAN DETECTOR, REMOVE- POLE/PEDESTAL TO REMAIN	2	EA	$ -	$ -
0700 1111	SINGLE COLUMN GROUND SIGN ASSEMBLY, F&I GROUND MOUNT, LESS THAN 12 SF	20	EA	$ -	$ -
0700 1600	SINGLE COLUMN GROUND SIGN ASSEMBLY, REMOVE	3	EA	$ -	$ -
0711 11123	THERMOPLASTIC, STANDARD, WHITE, SOLID, 12" FOR CROSSWALK AND ROUNDABOUT	442	LF	$ -	$ -
0711 11125	THERMOPLASTIC, STANDARD, WHITE, SOLID, 24" FOR STOP LINE AND CROSSWALK	470	LF	$ -	$ -
0711 11160	THERMOPLASTIC, STANDARD, WHITE, MESSAGE OR SYMBOL	2	EA	$ -	$ -
0711 16101	THERMOPLASTIC, STANDARD-OTHER SURFACES, WHITE, SOLID, 6"	0.003	GM	$ -	$ -
0711 17 1	THERMOPLASTIC, REMOVE EXISTING THERMOPLASTIC PAVEMENT MARKINGS- SURFACE TO REMAIN	317	SF	$ -	$ -
0715 1 12	LIGHTING CONDUCTORS, F&I, INSULATED, NO.8 - 6	3,247	LF	$ -	$ -
0715 516-513	LIGHT POLE COMPLETE-SPECIAL DESIGN, F&I, POLE TOP MOUNT, WOOD, 13'	11	EA	$ -	$ -
0715 516-518	LIGHT POLE COMPLETE-SPECIAL DESIGN, F&I, POLE TOP MOUNT, WOOD, 18'	1	EA	$ -	$ -
0751 49	TIMBER PEDESTRIAN BRIDGE	5,472	SF	$ -	$ -
				SUB-TOTAL BID ITEMS:	$ -

ITEMS TO BE LOCALLY FUNDED					
ITEM #	ITEM DESCRIPTION	QTY	UNIT of MEASURE	UNIT PRICE	EXTENDED PRICE
0522 2A	CONCRETE SHARED USE PATH, 7" THICK (HEAVY DUTY) (IN LIEU OF 4" THICK)	47	SY	$ -	$ -
CITY-01	18" WAPRO STAINLESS WASTOP INLINE CHECK VALVE	1	EA	$ -	$ -
				SUB-TOTAL LOCALLY FUNDED ITEMS:	$ -
				GRAND TOTAL ALL ITEMS:	$ -

AFFIDAVIT REGARDING LABOR AND SERVICES

Effective July 1, 2024, pursuant to §787.06(13), Florida Statutes, when a contract is executed, renewed, or extended between a nongovernmental entity and a governmental entity, the nongovernmental entity must provide the governmental entity with an affidavit signed by an officer or a representative of the nongovernmental entity under penalty of perjury attesting that the nongovernmental entity does not use coercion for labor or services.

Nongovernmental Entity's Name: _____
Address: _____
Phone Number: _____
Authorized Representative's Name: _____
Authorized Representative's Title: _____
Email Address: _____

AFFIDAVIT

I, *insert nongovernmental entity's authorized representative name*, as authorized representative attest that *insert nongovernmental entity's name* does not use coercion for labor or services as defined in §787.06, Florida Statutes.

Under penalty of perjury, I declare that I have read the foregoing Affidavit and that the facts stated in it are true.

_____
(Signature of authorized representative) Date

STATE
COUNTY OF
Sworn to (or affirmed) and subscribed before me, by means of ☐ physical presence or ☐ online notarization, this day of , (year), by

_____
Notary Public

_____
Commission Expires
Personally Known ☐ OR Produced Identification ☐
Type of Identification Produced

BID BOND

BID BOND

Bond No.:

KNOW ALL MEN BY THESE PRESENTS that _____, as Contractor, duly authorized to conduct business in the State of Florida, whose principal place of business is located at , Tel.: _____, (hereinafter called "PRINCIPAL"), and _____ , as SURETY, duly authorized to conduct business in the State of Florida, whose principal place of business is located at _____, Tel:_____(hereinafter called "SURETY"), are held and firmly bound unto the City of Port Orange, Florida, as CITY, a Florida municipal corporation, whose address is City of Port Orange, 1000 City Center Circle, Port Orange, Florida 32129, Tel: (386) 506-5501, (hereinafter called "OBLIGEE" or CITY", in the penal sum of_____dollars and (_____)/100 ($_____), lawful money of the United States, for the payment of which sum shall and truly be made, whereof PRINCIPAL and SURETY bind themselves, their heirs, executors, administrators, successors and assigns, jointly and severally, firmly by these presents.

THE CONDITION OF THIS OBLIGATION IS SUCH that, whereas the Principal has submitted the accompanying bid, dated_____, 20_____ , for:

Project Name/Bid No.:

Project Address:

Legal Description: See Attached

Description of Work:

NOW, THEREFORE,

A. If the Principal shall not withdraw said bid withing one hundred twenty (120) days after date of opening of the same, and shall within ten (10) days after the prescribed forms are presented to it for signature, enter into a written contract with the City in accordance with the bid as accepted, and give bonds with good and sufficient surety or sureties, as may be required, for the faithful performance and proper fulfillment of such contract, then the above obligations shall be void and of no effect, otherwise to remain in full force and virtue.

B. In the event of the withdrawal of said bid within the period specified, or the failure to enter into such contract and give such bonds withing the time specified, if the principal shall pay the City the difference between the amount specified in said bid and the amount for which the City may procure the required work and supplies. If the latter amount be in excess of the former, then the above obligations then the above obligations shall be void and of no effect, otherwise to remain in full force and virtue.

IN WITNESS WHEREOF, the above parties have executed this instrument under their several seals, this _____day of_____, 20____, the name and corporate seal of each corporate party being hereto affixed and these presents duly signed by its undersigned representative, pursuant to authority of its governing body.

Note: If the firm is a sole ownership or partnership including limited liability company, two (2) witnesses are required to attest the signature. If the firm is a corporation, then the corporate secretary shall attest and affix the corporate seal (Attach power of attorney to the original bid bond and financial statement of Surety Company).

PRINCIPAL:

_____
Signature

_____
Corporate Officer & Title

ATTEST:

_____
Signature

_____
Corporate Secretary (Affix Corporate Seal)

WITTNESSESS:

_____

_____

ATTEST:

_____
Signature

_____
Corporate Secretary (Affix Corporate Seal)

SURETY:

_____
Attorney-in-Fact (signature)

_____
Name & Title

_____
Name of Local Resident Agent

_____
City, State, Zip

_____
Telephone:
A.M. Best No.:_____ NAIC No.:_____

STATE OF _____

COUNTY OF _____

Before me this day personally appeared _____ (affiant), who, being duly sworn, deposes and says that he/she is the Attorney-in-Fact for the _____(corporate surety) and that this person has been authorized by _____ (corporate surety) to execute the foregoing bond on behalf of the Contractor named therein in favor of the City of Port Orange, Florida.

_____
Signature of Affiant

The foregoing instrument was acknowledged before me by means of ☐physical presence or ☐online notarization, this

_____ day of _____, 2025, by_____ and who:

☐Is personally known to me; or ☐ has produced _____ as identification.

_____

Notary Public, State of _____
Printed, typed or stamped name, commission and expiration:

END OF BID BOND

This document must be completed and returned with your Submittal

Bond No._____

COMBINATION PAYMENT AND PERFORMANCE BOND
FOR
PUBLIC CONSTRUCTION

per Section 255.05, Florida Statutes
Guaranty for Construction of Public Improvements

BY THIS BOND, We, _____, as Principal, and _____, a corporation, as Surety, are bound to_____, aFlorida municipal corporation, herein called "Owner" or sometimes referred to as "City," in the sum of _____ **AND**____**/100 DOLLARS** (**$**_____), for payment of which we bind ourselves, our heirs, personal representatives, successors, and assigns, jointly and severally.

THE CONDITION OF THIS BOND is that if Principal:

1. Performs the terms of that certain Standard Contract for Services, having an effective date of _____, entered into by and between the Principal and the City, for Police Department Duct/HVAC Mold Remediation, hereinafter referred to as the "Contract," being made a part of this bond by reference, at the times and in the manner prescribed in the Contract; and

2. Promptly makes payments to all claimants, as defined in Section 255.05(1), Florida Statutes, supplying Principal with labor, materials, or supplies, used directly or indirectly by Principal in the prosecution of the work provided for in the Contract (the "Work"); and

3. Pays Owner all losses, damages, delay damages (including contractually authorized liquidated damages), expenses, costs, and attorney's fees, including appellate proceedings, that Owner sustains because of a breach or material breach by Principal under the Contract documents; and

4. Performs the guarantee of all work and materials furnished under the Contract for the time specified in the Contract, then this bond is void; otherwise it remains in full force.

Notice of Nonpayment and Time Limitations

Any action instituted by a claimant under this bond for payment must be in accordance with the notice and time limitation provisions in Sections 255.05(2), (8) and (10), Florida Statutes.

Any changes in or under the contract documents and compliance or noncompliance with any formalities connected with the contract or the changes does not affect Surety's obligation under this bond.

IN WITNESS WHEREOF, this performance and payment bond is executed and shall be deemed an original, this__, day of_____, 20__.

Attest: _____

(Principal)

_____ By:_____

(As to Corporate Principal) Secretary

_____ *(Corporate Seal)*

(Witness to Principal)

_____

(Surety)

_____

(Witness to Surety)

By:_____ Name:_____ (Attorney-in-Fact)

(Corporate Seal)

NOTE: ***Date of BOND must not be prior to date of Contract.*** *If Developer/Principal is Partnership, all partners should executeBOND. All BONDS signed by an agent must be accompanied by a certified copy of the authority to act.*

IMPORTANT: Surety companies executing BONDS must appear on the Treasury Department's most current list (Circular 570 asamended) and be authorized to transact business in the State of Florida.

This affidavit must be completed and returned by the Awarded Bidder, upon issuance of a Notice of Intent to Award by the Purchasing Division of the City of Port Orange.

LEASED EMPLOYEE AFFIDAVIT

EXHIBIT CONTRACT #_____

☐ I hereby certify that I do not utilize an employee leasing company or employ leased employees. I further agree to notify the City in the event these circumstances change.

OR

☐ I affirm that an employee leasing company provides my workers' compensation coverage. I further understand that my contract with the employee leasing company limits my workers' compensation coverage to enrolled worksite employees only. My leasing arrangement does not cover un-enrolled worksite employees, independent contractors, uninsured sub-contractors or casual labor exposure.

I hereby certify that 100% of my workers are covered as worksite employees with the employee leasing company. I certify that I do not hire any casual or uninsured labor outside the employee leasing agreement. I agree to notify the City in the event that I have any workers not covered by the employee leasing workers' compensation policy. In the event that I have any workers not subject to the employee leasing arrangement, I agree to obtain a separate workers' compensation policy to cover these workers. I further agree to provide the City with a certificate of insurance providing proof of workers' compensation coverage prior to these workers entering any City jobsite.

I further agree to notify the City if my employee leasing arrangement terminates with the employee leasing company and I understand that I am required to furnish proof of replacement workers' compensation coverage prior to the termination of the employee leasing arrangement.

I certify that I have workers' compensation coverage for all of my workers through the employee leasing arrangement specified below:

Name of Employee Leasing Company: _____

Workers' Compensation Carrier: _____

A.M. Best Rating of Carrier: _____

Inception Date of Leasing Arrangement: _____

I further agree to notify the City in the event that I switch employee leasing companies. I recognize that I have an obligation to supply an updated workers' compensation certificate to the City that documents the change of carrier.

I hereby attest that the information provided in this affidavit is accurate. In addition, I certify that I have read and understand the above statements regarding my responsibility under the workers' compensation coverage.

Name of Contractor: _____

Signature of Owner/Officer: _____

Title: _____ Date: _____

This affidavit must be completed and returned by the Awarded Bidder, upon issuance of a Notice of Intent to Award by the Purchasing Division of the City of Port Orange. Please note, the City of Port Orange does not accept exemptions for Workers' Compensation coverage.

AFFIDAVIT REGARDING WORKERS' COMPENSATION

State of _____

County of _____

I, _____, being duly sworn according to law, deposes and says (it, he, she, they) have accepted the Workers' Compensation laws of the State of Florida, with its supplements and amendments and has insured (its, his, her, their) liability there under accordance with the terms of sail Laws with the _____ Company, under the terms of Policy Number _____ for a period from _____, 20____ to _____, 20____.

WITNESS:

By:_____

Name:_____

CONTRACTOR:

Company:_____

By:_____

Name/Title: _____

Sworn to/Affirmed and subscribed before me this _____ day of _____, 20____, by _____, who is personally known to me or who produced _____ as identification.

_____

NOTARY PUBLIC – STATE OF

Type or Print Name:_____

Commission No.: _____

Commission Expires:_____

(Seal)

AGREEMENT BETWEEN OWNER AND CONTRACTOR FOR CONSTRUCTION CONTRACT (STIPULATED PRICE)

This Agreement is by and between **City of Port Orange, 1000 City Center Circle, Port Orange, Florida 32129** ("Owner") and _____ ("Contractor").

Terms used in this Agreement have the meanings stated in the General Conditions and the Supplementary Conditions.

Owner and Contractor hereby agree as follows:

ARTICLE 1—WORK

1.01 Contractor shall complete all Work as specified or indicated in the Contract Documents. The Work is generally described as follows:

Florida Department of Transportation ("FDOT" and/or "Department") State-Funded Grant Project participation in the SJR2C (St Johns River to Sea) Loop Trail (Spruce Creek Road) from South of Selin Circle to Herbert Street project.

ARTICLE 2—THE PROJECT

2.01 The Project, of which the Work under the Contract Documents is a part, is generally described as follows:

ITB 25-13 - 4398653-2-54-01 SJR2C Loop Trail (Spruce Creek Rd.) From S. of Selin Circle to Herbert Street ("Project").

ARTICLE 3—ENGINEER

3.01 The Project has been designed by the Design Professional specified and Engineer shall serve as Owner's agent for purposes of approving Contractor's payment requests, and as otherwise provided in the Contract documents.

A. The part of the project that pertains to the Work has been designed by Merlynn Anderson, P.E. ("Design Professional of Record") of Stanley Consultants.

B. The Owner has retained _____ ("Engineer"), a _____ corporation, to act as Owner's representative, assume all duties and responsibilities, and have the rights and authority assigned

DRAFT

Copyright© 2018 National Society of Professional Engineers, American Council of Engineering Companies, and American Society of Civil Engineers. All rights reserved.

to Engineer in the Contract Documents in connection with the completion of the Work in accordance with the Contract Documents.

ARTICLE 4—CONTRACT TIMES

4.01 *Time is of the Essence*

A. All time limits for Milestones, if any, Substantial Completion, and completion and readiness for final payment as stated in the Contract Documents are of the essence of the Contract.

4.02 *Contract Times: Dates*

A. Deleted in its entirety.

4.03 *Contract Times: Days*

A. The Work will be substantially complete within **246** days after the date when the Contract Times commence to run as provided in Paragraph 4.01 of the General Conditions, and completed and ready for final payment in accordance with Paragraph 15.06 of the General Conditions.

B. Unless otherwise modified in a Notice to Proceed issued after the Effective Date of the Agreement or an allowable extension of time in accordance with Paragraph 4.01 of the General Conditions, the work shall be finally completed in accordance with Paragraph 15.06 of the General Conditions **270** days from the Notice to Proceed.

4.04 *Milestones* – Deleted in its entirety.

4.05 *Liquidated Damages*

A. Contractor and Owner recognize that time is of the essence as stated in Paragraph 4.01 above and that Owner will suffer financial and other losses if the Work is not completed and Milestones not achieved within the Contract Times, as duly modified. The parties also recognize the delays, expense, and difficulties involved in proving, in a legal or arbitration proceeding, the actual loss suffered by Owner if the Work is not completed on time. Accordingly, instead of requiring any such proof, Owner and Contractor agree that as liquidated damages for delay (but not as a penalty):

1. *Substantial Completion:* Contractor shall pay Owner $0.00 for each day that expires after the time (as duly adjusted pursuant to the Contract) specified above for Substantial Completion, until the Work is substantially complete.

2. *Completion of Remaining Work:* After Substantial Completion, if Contractor shall neglect, refuse, or fail to complete the remaining Work within the Contract Times (as duly adjusted pursuant to the Contract) for completion and readiness for final payment, Contractor shall pay Owner $0.00 for each day that expires after such time until the Work is completed and ready for final payment.

3. Deleted in its entirety.

B. If Owner recovers liquidated damages for a delay in completion by Contractor, then such liquidated damages are Owner's sole and exclusive remedy for such delay, and Owner is precluded from recovering any other damages, whether actual, direct, excess, or consequential, for such delay, except for special damages (if any) specified in this Agreement.

Copyright© 2018 National Society of Professional Engineers, American Council of Engineering Companies, and American Society of Civil Engineers. All rights reserved.

C. Deleted in its entirety.

4.06 *Special Damages* - Deleted in its entirety.

A. Deleted in its entirety.

B. Deleted in its entirety.

C. Deleted in its entirety.

ARTICLE 5—CONTRACT PRICE

5.01 Owner shall pay Contractor for completion of the Work in accordance with the Contract Documents, the amounts that follow, subject to adjustment under the Contract:

A. Deleted in its entirety.

B. For all Unit Price Work in accordance with Paragraph 13.03 of the General Conditions, an amount equal to the sum of the established unit price for each separately identified item of Unit Price Work times the actual quantity of that item:

Unit Price Work					
Item No.	**Description**	**Unit**	**Estimated Quantity**	**Unit Price**	**Extended Price**
See Exhibit No. 1 Contractor's Bid Schedule.					
Total of all Extended Prices for Unit Price Work (subject to final adjustment based on actual quantities)					$

The Bid Unit Prices set forth above are guaranteed prices. Although the Estimated Quantities are estimates and may increase or decrease based on determinations of Engineer, Contractor agrees and understands that the Bid Unit Prices shall remain the same irrespective of the quantities. Contractor understands that in agreeing to any Bid Unit Price it is agreeing to bear the risk associated with any material price increase of escalation. Owner agrees and understands that in agreeing to any Bid Unit Price it is agreeing to bear the risk associated with any material price decrease or reduction.

C. Deleted in its entirety.

D. For all Work, at the prices stated in Contractor's Bid Schedule, attached hereto as an exhibit.

ARTICLE 6—PAYMENT PROCEDURES

6.01 *Submittal and Processing of Payments*

A. Contractor shall submit Applications for Payment in accordance with Article 15 of the General Conditions. Applications for Payment will be processed by Engineer as provided in the General Conditions.

Copyright© 2018 National Society of Professional Engineers, American Council of Engineering Companies, and American Society of Civil Engineers. All rights reserved.

6.02 *Progress Payments; Retainage*

A. Owner shall make progress payments on the basis of Contractor's Applications for Payment on or about the **15th** day of each month during performance of the Work as provided in Paragraph 6.02.A.1 below, provided that such Applications for Payment have been submitted in a timely manner and otherwise meet the requirements of the Contract. All such payments will be measured by the Schedule of Values established as provided in the General Conditions (and in the case of Unit Price Work based on the number of units completed) or, in the event there is no Schedule of Values, as provided elsewhere in the Contract.

1. Prior to Substantial Completion, progress payments will be made in an amount equal to the percentage indicated below but, in each case, less the aggregate of payments previously made and less such amounts as Owner may withhold, including but not limited to liquidated damages, in accordance with the Contract.

a. **95%** percent of the value of the Work completed (with the balance being retainage).

1) Deleted in its entirety.

b. Deleted in its entirety.

B. Owner shall withhold Five percent (5%) of each progress payment as retainage.

6.03 *Final Payment*

A. Upon final completion and acceptance of the Work, Owner shall pay the remainder of the Contract Price in accordance with Paragraph 15.06 of the General Conditions.

6.04 *Consent of Surety*

A. Owner will not make final payment, or return or release retainage at Substantial Completion or any other time, unless Contractor submits written consent of the surety to such payment, return, or release.

6.05 *Interest* Deleted in its entirety.

A. Deleted in its entirety.

ARTICLE 7—CONTRACT DOCUMENTS

7.01 *Contents*

A. The Contract Documents consist of all of the following:

1. This Agreement (pages 1 to 12, inclusive).
2. Bonds:
   a. Combination Payment and Performance bond, together with power of attorney, (pages 1 to 4, inclusive).
3. General Conditions (pages 1 to 74, inclusive).
4. Deleted in its entirety.
5. Technical Specifications, on file with _____, _____ (pages __ to ___, inclusive).
6. Drawings, on file with _____, _____ (pages __ to __, inclusive).

Copyright© 2018 National Society of Professional Engineers, American Council of Engineering Companies, and American Society of Civil Engineers. All rights reserved.

7. Addendum No. __ (pages __ to __, inclusive).
8. Addendum No. __ (pages __ to __, inclusive).
9. Exhibits to this Agreement (enumerated as follows):
    a. Exhibit No. 1 Contractor's Bid Schedule (page __, inclusive).
    b. Exhibit No. 2 Contractor's Proposal (pages __ to __, inclusive).
    c. Exhibit No. 3 Composite Exhibit No. 3 City's _____ (pages __ to ___, not attached, on file with office of the City Clerk).
10. The following which may be delivered or issued on or after the Effective Date of the Contract and are not attached hereto:
    a. Notice to Proceed.
    b. Work Change Directives.
    c. Change Orders.
    d. Field Orders.
    e. Warranty Bond, if any.

B. The Contract Documents listed in Paragraph 7.01.A are attached to this Agreement (except as expressly noted otherwise above).

C. There are no Contract Documents other than those listed above in this Article 7.

D. The Contract Documents may only be amended, modified, or supplemented as provided in the Contract.

ARTICLE 8—REPRESENTATIONS, CERTIFICATIONS, AND STIPULATIONS

8.01 *Contractor's Representations*

A. In order to induce Owner to enter into this Contract, Contractor makes the following representations:

1. Contractor has examined and carefully studied the Contract Documents, including Addenda.
2. Contractor has visited the Site, conducted a thorough visual examination of the Site and adjacent areas, and become familiar with the general, local, and Site conditions that may affect cost, progress, and performance of the Work.
3. Contractor is familiar with all Laws and Regulations that may affect cost, progress, and performance of the Work.
4. Contractor has carefully studied the reports of explorations and tests of subsurface conditions at or adjacent to the Site and the drawings of physical conditions relating to existing surface or subsurface structures at the Site that have been identified in the Supplementary Conditions, with respect to the Technical Data in such reports and drawings.
5. Contractor has carefully studied the reports and drawings relating to Hazardous Environmental Conditions, if any, at or adjacent to the Site that have been identified in

DRAFT

Copyright© 2018 National Society of Professional Engineers, American Council of Engineering Companies, and American Society of Civil Engineers. All rights reserved.

the Supplementary Conditions, with respect to Technical Data in such reports and drawings.

6. Contractor has considered the information known to Contractor itself; information commonly known to contractors doing business in the locality of the Site; information and observations obtained from visits to the Site; the Contract Documents; and the Technical Data identified in the Supplementary Conditions or by definition, with respect to the effect of such information, observations, and Technical Data on (a) the cost, progress, and performance of the Work; (b) the means, methods, techniques, sequences, and procedures of construction to be employed by Contractor; and (c) Contractor's safety precautions and programs.

7. Based on the information and observations referred to in the preceding paragraph, Contractor agrees that no further examinations, investigations, explorations, tests, studies, or data are necessary for the performance of the Work at the Contract Price, within the Contract Times, and in accordance with the other terms and conditions of the Contract.

8. Contractor is aware of the general nature of work to be performed by Owner and others at the Site that relates to the Work as indicated in the Contract Documents.

9. Contractor has given Engineer written notice of all conflicts, errors, ambiguities, or discrepancies that Contractor has discovered in the Contract Documents, and of discrepancies between Site conditions and the Contract Documents, and the written resolution thereof by Engineer is acceptable to Contractor.

10. The Contract Documents are generally sufficient to indicate and convey understanding of all terms and conditions for performance and furnishing of the Work.

11. Contractor's entry into this Contract constitutes an incontrovertible representation by Contractor that without exception all prices in the Agreement are premised upon performing and furnishing the Work required by the Contract Documents.

8.02 *Contractor's Certifications*

A. Contractor certifies that it has not engaged in corrupt, fraudulent, collusive, or coercive practices in competing for or in executing the Contract. For the purposes of this Paragraph 8.02:

1. "corrupt practice" means the offering, giving, receiving, or soliciting of anything of value likely to influence the action of a public official in the bidding process or in the Contract execution;

2. "fraudulent practice" means an intentional misrepresentation of facts made (a) to influence the bidding process or the execution of the Contract to the detriment of Owner, (b) to establish Bid or Contract prices at artificial non-competitive levels, or (c) to deprive Owner of the benefits of free and open competition;

3. "collusive practice" means a scheme or arrangement between two or more Bidders, with or without the knowledge of Owner, a purpose of which is to establish Bid prices at artificial, non-competitive levels; and

Copyright© 2018 National Society of Professional Engineers, American Council of Engineering Companies, and American Society of Civil Engineers. All rights reserved.

4. "coercive practice" means harming or threatening to harm, directly or indirectly, persons or their property to influence their participation in the bidding process or affect the execution of the Contract.

8.03 *Standard General Conditions*

A. Owner stipulates that if the General Conditions that are made a part of this Contract are EJCDC® C-700, Standard General Conditions for the Construction Contract (2018), published by the Engineers Joint Contract Documents Committee, and if Owner is the party that has furnished said General Conditions, then Owner has plainly shown all modifications to the standard wording of such published document to the Contractor, through a process such as highlighting or "track changes" (redline/strikeout), or in the Supplementary Conditions.

B. Any reference to Supplementary Conditions throughout this document, the C-520 Agreement between Owner and Contractor for Construction Contract (2018), and the EJCDC® C-700, Standard General Conditions for the Construction Contract (2018), are hereby deleted in their entirety.

ARTICLE 9—MISCELLANEOUS

9.01 *Assignment of Contract*

A. No assignment by a party hereto of any rights under or interests in the Contract will be binding on another party hereto without the written consent of the party sought to be bound; and, specifically but without limitation, moneys that may become due and moneys that are due may not be assigned without such consent (except to the extent that the effect of this restriction may be limited by law), and unless specifically stated to the contrary in any written consent to an assignment, no assignment will release or discharge the assignor from any duty or responsibility under the Contract Documents.

9.02 *Successors and Assigns*

Owner and Contractor each binds itself, its partners, successors, assigns, and legal representatives to the other party hereto, its partners, successors, assigns, and legal representatives in respect to all covenants, agreements, and obligations contained in the Contract Documents.

9.03 *Severability*

Any provisions or part of the Contract Documents held to be void or unenforceable under any Law or Regulation shall be deemed stricken, and all remaining provisions and parts shall continue to be valid and binding upon Owner and Contractor, who agree that the Contract Documents shall be reformed to replace such stricken provision or part thereof with a valid and enforceable provision or part that comes as close as possible to expressing the intention of the stricken provision.

9.04 *No-Damage-for-Delay*

Contractor shall not be entitled to any damages (including, without limitation, expenses, costs, fees, extended field overhead and general conditions, equipment costs, home office overhead, lost productivity and inefficiency damages, additional payroll and labor costs, etc.) for any delay to its Work. Contractor's sole and exclusive remedy for a delay to its Work that is not caused by Contractor (or a person or entity performing a portion of Contractor's scope of Work) shall be an

Copyright© 2018 National Society of Professional Engineers, American Council of Engineering Companies, and American Society of Civil Engineers. All rights reserved.

extension of time to substantially complete and finally complete the Project; provided, however, that Owner granting Contractor an extension of time is not a condition precedent to this no-damage-for-delay provision. Contractor shall also not be entitled to any damages for disruption or interference to its Work or for having to accelerate or incur additional labor or payroll costs in order to make up or overcome a delay to its Work so that it can maintain the dates for Substantial Completion and Final Completion. Contractor agrees that in determining and agreeing to the Contract Price it is considered this no-damage-for-delay provision and understands that it is not entitled to any damages whatsoever for a delay to its Work.

9.05 *No intended Third-Party Beneficiaries*

There are no intended third-party beneficiaries to the Contract.

9.06 *Public Record Compliance*

Contractor shall comply with public records laws as set forth in Section 119, Florida Statutes, and shall specifically: (a) keep and maintain public records that ordinarily and necessarily would be required by the City in order to perform the service; (b) provide the public with access to public records on the same terms and conditions that the City would provide the records at a cost that does not exceed the cost provided in Section 119, Florida Statutes, or as otherwise provided by law; (c) ensure that public records that are exempt or confidential and exempt from public records disclosure requirements are not disclosed except as authorized by law; and (d) meet all requirements for retaining public records and transfer to the City, at no cost, all public records in possession of the Contractor upon termination of the Contract and destroy any duplicate public records that are exempt or confidential and exempt from public records disclosure requirements. All records stored electronically must be provided to the City in a format that is compatible with the information technology systems of the City.

9.07 *Records*

The design, permits and all other records prepared by the Contractor, assembled for the City, subcontracted for the City, and any other records related to the scope of work in the possession of the Contractor shall be retained by the Contractor for the requisite time set forth in Florida Administration Code Rule 1 b-24.

http://dos.myflorida.com/library-archives/records-management/. Contractor may dispose of the records in accordance with Florida law, upon receipt of a signed written release signed by the City Attorney. Contractor agrees to indemnify the City for failure to comply with the requirements of this paragraph including costs of litigation and legal fees incurred through all appeals. City reserves the right to select and approve the defense attorney.

9.08 *Force Majure*

Neither party shall be liable for any delay in performance or failure to perform any obligation hereunder if, and to the extent that, such failure or delay is caused by an event of Force Majeure. Force Majeure shall mean any act, event or condition that is beyond the party's reasonable control, that materially and adversely affects the party's ability to perform its obligations hereunder, and that is not the result of the party's willful neglect, error, omission or failure to exercise reasonable due diligence.

DRAFT

Copyright© 2018 National Society of Professional Engineers, American Council of Engineering Companies, and American Society of Civil Engineers. All rights reserved.

9.09 *Contract construction*

This Contract may be executed in one or more counterparts, each of which shall be deemed an original but all of which together constitute one and the same instrument. The delivery by facsimile or e-mail of an executed copy of this Contract shall be deemed valid as if an original signature was delivered. No contract shall be formed between the Contractor and the City until both Parties have signed this Contract.

9.10 *Financial Disclosures*

During the term of this Contract, Contractor covenants and agrees that it will keep adequate books and records of accounts in accordance with Generally Accepted Accounting Principals (GAAP). Contractor further covenants and agrees that in the event the Contractor becomes insolvent and/or fails to pay its current obligations when they become due, Contractor shall so advise Owner of such situation and, upon request from the Owner, Contractor shall provide to Owner financial statements of Contractor, including current income and expense statements of Contractor, consolidated balance sheets signed by a financial officer of Contractor, and audited reports provided by Contractor to Contractor's Surety, audited financial statements certified by a Certified Public Accountant concerning the financial affairs of the Contractor and all affiliates of Contractor, and such other financial information requested by Owner. All such financial information shall comply with GAAP.

In the event that Contractor becomes insolvent and/or fails to pay its obligations when they become due, Contractor hereby authorized its sureties, lenders, financial institutions and other third parties to release Owner financial information requested by Owner, including, but not limited to, the financial information described in the preceding paragraph.

9.11 *Waiver of Jury Trial*

All parties hereby waive any and all right to any trial by jury in any action or proceeding arising directly or indirectly hereunder.

9.12 *Insurance Requirements*

If the recipient elects to self-perform the Project, and such self-performance is approved by the Department in accordance with the terms of this Agreement, the Recipient may self-insure and proof of self-insurance shall be provided to the Department. If the Recipient elects to hire a contractor or consultant to perform the Project, then the Recipient shall, or cause its contractor or consultant to carry Commercial General Liability insurance providing continuous coverage for all work or operations performed under the Agreement. Such insurance shall be no more restrictive than that provided by the latest occurrence from edition of the standard Commercial General Liability Form (ISO Form CG 00 01) as filed for use in the State of Florida. Recipient shall, or cause its contractor to cause the Department to be made an Additional Insured as to such insurance. Such coverage shall be on an "Occurrence" basis and shall include Products/Completed Operations coverage. The coverage afforded to the Department as an Additional Insured shall be primary as to any other available insurance and shall not be more

DRAFT

Copyright© 2018 National Society of Professional Engineers, American Council of Engineering Companies, and American Society of Civil Engineers. All rights reserved.

restrictive than the coverage afforded to the Named Insured. The limits of coverage shall not be less than $1,000,000 for each occurrence and not less than $5,000,000 annual general aggregate, inclusive of amounts provided by an umbrella or excess policy. The limits of coverage described herein shall apply fully to the work or operations performed under the Agreement, and may not be shared with or dismissed by claims unrelated to the Agreement. The policy/ies and coverage described herein may be subject to a deductible and such deductibles shall be paid by the Named Insured. No policy/ies or coverage described herein may contain or be subject to a Retention or a Self-Insured Retention unless the Recipient is a state agency or subdivision of the State of Florida that elects to self-perform the Project. Prior to the execution of the Agreement, and at all renewal periods which occur prior to final acceptance of the work, the Department shall be provided with an ACORD Certificate of Liability Insurance reflecting the coverage described herein. The Department shall be notified in writing within ten days of any cancellation, lapse, renewal, or proposed change to any policy or coverage described herein. The Department's approval or failure to disapprove any policy/ies, coverage, or ACORD Certificates shall not relieve or excuse any obligation to procure and maintain the insurance required herein, nor serve as a waiver of any rights or defenses the Department may have.

9.13 *E-Verify*

Contractor shall utilize the U.S. Department of Homeland Security's E-Verify system to verify the employment eligibility of all new employees hired by the Contractor during the term of this Contract and shall expressly require any sub-contractors performing services pursuant to this Contract to likewise utilize the U.S. Department of Homeland Security's E-Verify system to verify the employment eligibility of all new employees hired by the sub-contractor during the term of this Contract.

9.14 *Indemnity*

To the extent provided by law, Contractor shall indemnify, defend, and hold harmless the City and the State of Florida, Department of Transportation, including the Department's officers, agents, and employees, against any actions, claims, or damages arising out of, relating to, or resulting from negligent or wrongful act(s) of Contractor, or any of its officers, agents, or employees, acting within the scope of their office or employment, in connection with the rights granted to or exercised by Contractor.

The foregoing indemnification shall not constitute a waiver of the Department's or Coty's sovereign immunity beyond the limits set forth in Florida Statutes, Section 768.28. Nor shall the same be construed to constitute agreement by Contractor to indemnify City for the negligent acts or omissions of City, its officers, agents, or employees, or third parties. Nor shall the same be construed to constitute agreement by Contractor to indemnify the Department for the negligent acts or omissions of the Department, its officers, agents, or employees, or third parties. This indemnification shall survive the termination of this Agreement.

9.15 *Cooperation with Inspector General*

Contractor agrees to comply with Section 20.055(5), Florida Statutes, and to incorporate in all subcontracts the obligation to comply with Section 20.055(5), Florida Statutes.

DRAFT

Copyright© 2018 National Society of Professional Engineers, American Council of Engineering Companies, and American Society of Civil Engineers. All rights reserved.

IN WITNESS WHEREOF, Owner and Contractor have signed this Agreement.

This Agreement will be effective on _____ (which is the Effective Date of the Contract).

Contractor:

_____
(typed or printed name of organization)

By: _____
(individual's signature)

Date: _____
(date signed)

Name: _____
(typed or printed)

Title: _____
(typed or printed)

(If company is a corporation, a partnership, or a joint venture, attach evidence of authority to sign.)

Attest: _____
(individual's signature)

Title: _____
(typed or printed)

Address for giving notices:

_____

_____

_____

Phone: _____

Email: _____

License No.: _____

State: _____

DRAFT

Copyright© 2018 National Society of Professional Engineers, American Council of Engineering Companies, and American Society of Civil Engineers. All rights reserved.

Owner:

City of Port Orange

(typed or printed name of organization)

By: _____

(individual's signature)

Date: _____

(date signed)

Name: Scott Stiltner

(typed or printed)

Title: Mayor

(typed or printed)

Attest: Robin L. Fenwick, MMC

(individual's signature)

Title: City Clerk

(typed or printed)

Address for giving notices:

1000 City Center Circle

Port Orange, Florida 32129

(386) 506-5500

DRAFT

Copyright© 2018 National Society of Professional Engineers, American Council of Engineering Companies, and American Society of Civil Engineers. All rights reserved.

This document has important legal consequences; consultation with an attorney is encouraged with respect to its use or modification. This document should be adapted to the particular circumstances of the contemplated Project and the controlling Laws and Regulations.

STANDARD GENERAL CONDITIONS OF THE CONSTRUCTION CONTRACT

Prepared By

EJCDC®
ENGINEERS JOINT CONTRACT DOCUMENTS COMMITTEE

ACEC
AMERICAN COUNCIL OF ENGINEERING COMPANIES

ASCE
AMERICAN SOCIETY OF CIVIL ENGINEERS

NSPE®
NATIONAL SOCIETY OF PROFESSIONAL ENGINEERS

Endorsed By

CSI®
Building Knowledge
Improving Project Delivery

NUCA
We Dig America

EJCDC® C-700, Standard General Conditions of the Construction Contract.
Copyright© 2018 National Society of Professional Engineers, American Council of Engineering Companies, and American Society of Civil Engineers. All rights reserved.

4885-5313-8281, v. 424

Copyright© 2018

National Society of Professional Engineers

1420 King Street, Alexandria, VA 22314-2794

(703) 684-2882

www.nspe.org

American Council of Engineering Companies

1015 15th Street N.W., Washington, DC 20005

(202) 347-7474

www.acec.org

American Society of Civil Engineers

1801 Alexander Bell Drive, Reston, VA 20191-4400

(800) 548-2723

www.asce.org

The copyright for this EJCDC document is owned jointly by the three sponsoring organizations listed above. The National Society of Professional Engineers is the Copyright Administrator for the EJCDC documents; please direct all inquiries regarding EJCDC copyrights to NSPE.

NOTE: EJCDC publications may be purchased at www.ejcdc.org, or from any of the sponsoring organizations above.

STANDARD GENERAL CONDITIONS OF THE CONSTRUCTION CONTRACT

TABLE OF CONTENTS

Page

Article 1—Definitions and Terminology 1
1.01 Defined Terms 1
1.02 Terminology 6
Article 2—Preliminary Matters 7
2.01 Delivery of Performance and Payment Bonds; Evidence of Insurance 7
2.02 Copies of Documents 8
2.03 Before Starting Construction 8
2.04 Preconstruction Conference; Designation of Authorized Representatives 8
2.05 Acceptance of Schedules 8
2.06 Electronic Transmittals 9
Article 3—Contract Documents: Intent, Requirements, Reuse 10
3.01 Intent 10
3.02 Reference Standards 10
3.03 Reporting and Resolving Discrepancies 11
3.04 Requirements of the Contract Documents 12
3.05 Reuse of Documents 12
Article 4—Commencement and Progress of the Work 13
4.01 Commencement of Contract Times; Notice to Proceed 13
4.02 Starting the Work 13
4.03 Reference Points 13
4.04 Progress Schedule 13
4.05 Delays in Contractor's Progress 13
Article 5—Site; Subsurface and Physical Conditions; Hazardous Environmental Conditions 15
5.01 Availability of Lands 15
5.02 Use of Site and Other Areas 15
5.03 Subsurface and Physical Conditions 16
5.04 Differing Subsurface or Physical Conditions 17

DRAFT

Copyright© 2018 National Society of Professional Engineers, American Council of Engineering Companies, and American Society of Civil Engineers. All rights reserved.

5.05 Underground Facilities 19
5.06 Hazardous Environmental Conditions at Site 21
Article 6—Bonds and Insurance 23
6.01 Performance, Payment, and Other Bonds 23
6.02 Insurance—General Provisions 23
6.03 Contractor's Insurance 25
6.04 Builder's Risk and Other Property Insurance 26
6.05 Property Losses; Subrogation 27
6.06 Receipt and Application of Property Insurance Proceeds 28
Article 7—Contractor's Responsibilities 28
7.01 Contractor's Means and Methods of Construction 28
7.02 Supervision and Superintendence 29
7.03 Labor; Working Hours 29
7.04 Services, Materials, and Equipment 30
7.05 "Or Equals" 30
7.06 Substitutes 31
7.07 Concerning Subcontractors and Suppliers 33
7.08 Patent Fees and Royalties 34
7.09 Permits 34
7.10 Taxes 34
7.11 Laws and Regulations 34
7.12 Record Documents 35
7.13 Safety and Protection 35
7.14 Hazard Communication Programs 36
7.15 Emergencies 37
7.16 Submittals 37
7.17 Contractor's General Warranty and Guarantee 40
7.18 Indemnification 41
7.19 Delegation of Professional Design Services 42
Article 8—Other Work at the Site 42
8.01 Other Work 42
8.02 Coordination 43
8.03 Legal Relationships 44

DRAFT

Copyright© 2018 National Society of Professional Engineers, American Council of Engineering Companies, and American Society of Civil Engineers. All rights reserved.

Article 9—Owner's Responsibilities 45
9.01 Communications to Contractor 45
9.02 Replacement of Engineer 45
9.03 Furnish Data 45
9.04 Pay When Due 45
9.05 Lands and Easements; Reports, Tests, and Drawings 45
9.06 Insurance 45
9.07 Change Orders 45
9.08 Inspections, Tests, and Approvals 45
9.09 Limitations on Owner's Responsibilities 45
9.10 Undisclosed Hazardous Environmental Condition 46
9.11 Evidence of Financial Arrangements 46
9.12 Safety Programs 46
Article 10—Engineer's Status During Construction 46
10.01 Owner's Representative 46
10.02 Visits to Site 46
10.03 Resident Project Representative 46
10.04 Engineer's Authority 47
10.05 Determinations for Unit Price Work 47
10.06 Decisions on Requirements of Contract Documents and Acceptability of Work 47
10.07 Limitations on Engineer's Authority and Responsibilities 47
10.08 Compliance with Safety Program 48
Article 11—Changes to the Contract 48
11.01 Amending and Supplementing the Contract 48
11.02 Change Orders 48
11.03 Work Change Directives 49
11.04 Field Orders 49
11.05 Owner-Authorized Changes in the Work 49
11.06 Unauthorized Changes in the Work 50
11.07 Change of Contract Price 50
11.08 Change of Contract Times 51
11.09 Change Proposals 51
11.10 Notification to Surety 53

DRAFT

Copyright© 2018 National Society of Professional Engineers, American Council of Engineering Companies, and American Society of Civil Engineers. All rights reserved.

Article 12—Claims 53
12.01 Claims 53
Article 13—Cost of the Work; Allowances; Unit Price Work 53
13.01 Cost of the Work 53
13.02 Allowances 53
13.03 Unit Price Work 54
Article 14—Tests and Inspections; Correction, Removal, or Acceptance of Defective Work 54
14.01 Access to Work 54
14.02 Tests, Inspections, and Approvals 55
14.03 Defective Work 55
14.04 Acceptance of Defective Work 56
14.05 Uncovering Work 57
14.06 Owner May Stop the Work 57
14.07 Owner May Correct Defective Work 57
Article 15—Payments to Contractor; Set-Offs; Completion; Correction Period 58
15.01 Progress Payments 58
15.02 Contractor's Warranty of Title 61
15.03 Substantial Completion 61
15.04 Partial Use or Occupancy 62
15.05 Final Inspection 63
15.06 Final Payment 63
15.07 Waiver of Claims 65
15.08 Correction Period 65
Article 16—Suspension of Work and Termination 66
16.01 Owner May Suspend Work 66
16.02 Owner May Terminate for Cause 66
16.03 Owner May Terminate for Convenience 67
16.04 Contractor May Stop Work or Terminate 68
Article 17—Final Resolution of Disputes 69
17.01 Methods and Procedures 69
Article 18—Miscellaneous 70
18.01 Giving Notice 70
18.02 Computation of Times 70

Copyright© 2018 National Society of Professional Engineers, American Council of Engineering Companies, and American Society of Civil Engineers. All rights reserved.

18.03 Cumulative Remedies 70
18.04 Limitation of Damages 70
18.05 No Waiver 70
18.06 Survival of Obligations 70
18.07 Controlling Law 71
18.08 Assignment of Contract 71
18.09 Successors and Assigns 71
18.10 Headings 71

DRAFT

Copyright© 2018 National Society of Professional Engineers, American Council of Engineering Companies, and American Society of Civil Engineers. All rights reserved.

STANDARD GENERAL CONDITIONS OF THE CONSTRUCTION CONTRACT

ARTICLE 1—DEFINITIONS AND TERMINOLOGY

1.01 *Defined Terms*

A. Wherever used in the Bidding Requirements or Contract Documents, a term printed with initial capital letters, including the term's singular and plural forms, will have the meaning indicated in the definitions below. In addition to terms specifically defined, terms with initial capital letters in the Contract Documents include references to identified articles and paragraphs, and the titles of other documents or forms.

1. *Addenda*—Written or graphic instruments issued prior to the opening of Bids which clarify, correct, or change the Bidding Requirements or the proposed Contract Documents.

2. *Agreement*—The written instrument, executed by Owner and Contractor, that sets forth the Contract Price and Contract Times, identifies the parties and the Engineer, and designates the specific items that are Contract Documents.

3. *Application for Payment*—The document prepared by Contractor, in a form acceptable to Engineer, to request progress or final payments, and which is to be accompanied by such supporting documentation as is required by the Contract Documents.

4. *Bid*—The offer of a Bidder submitted on the prescribed form setting forth the prices for the Work to be performed.

5. *Bidder*—An individual or entity that submits a Bid to Owner.

6. *Bidding Documents*—The Bidding Requirements, the proposed Contract Documents, and all Addenda.

7. *Bidding Requirements*—The Advertisement or invitation to bid, Instructions to Bidders, Bid Bond or other Bid security, if any, the Bid Form, and the Bid with any attachments.

8. *Change Order*—A document which is signed by Contractor and Owner and authorizes an addition, deletion, or revision in the Work or an adjustment in the Contract Price or the Contract Times, or other revision to the Contract, issued on or after the Effective Date of the Contract.

9. *Change Proposal*—A written request by Contractor, duly submitted in compliance with the procedural requirements set forth herein, seeking an adjustment in Contract Price or Contract Times; contesting an initial decision by Engineer concerning the requirements of the Contract Documents or the acceptability of Work under the Contract Documents; challenging a set-off against payments due; or seeking other relief with respect to the terms of the Contract.

Copyright© 2018 National Society of Professional Engineers, American Council of Engineering Companies, and American Society of Civil Engineers. All rights reserved.

10. *Claim*

    a. A demand or assertion by Owner directly to Contractor, duly submitted in compliance with the procedural requirements set forth herein, seeking an adjustment of Contract Price or Contract Times; contesting an initial decision by Engineer concerning the requirements of the Contract Documents or the acceptability of Work under the Contract Documents; contesting Engineer's decision regarding a Change Proposal; seeking resolution of a contractual issue that Engineer has declined to address; or seeking other relief with respect to the terms of the Contract.

    b. A demand or assertion by Contractor directly to Owner, duly submitted in compliance with the procedural requirements set forth herein, contesting Engineer's decision regarding a Change Proposal, or seeking resolution of a contractual issue that Engineer has declined to address.

    c. A demand or assertion by Owner or Contractor, duly submitted in compliance with the procedural requirements set forth herein, made pursuant to Paragraph 12.01.A.4, concerning disputes arising after Engineer has issued a recommendation of final payment.

    d. A demand for money or services by a third party is not a Claim.

11. *Constituent of Concern*—Asbestos, petroleum, radioactive materials, polychlorinated biphenyls (PCBs), lead-based paint (as defined by the HUD/EPA standard), hazardous waste, and any substance, product, waste, or other material of any nature whatsoever that is or becomes listed, regulated, or addressed pursuant to Laws and Regulations regulating, relating to, or imposing liability or standards of conduct concerning, any hazardous, toxic, or dangerous waste, substance, or material.

12. *Contract*—The entire and integrated written contract between Owner and Contractor concerning the Work.

13. *Contract Documents*—Those items so designated in the Agreement, and which together comprise the Contract.

14. *Contract Price*—The money that Owner has agreed to pay Contractor for completion of the Work in accordance with the Contract Documents.

15. *Contract Times*—The number of days or the dates by which Contractor shall: (a) achieve Milestones, if any; (b) achieve Substantial Completion; and (c) complete the Work.

16. *Contractor*—The individual or entity with which Owner has contracted for performance of the Work.

17. *Cost of the Work*—See Paragraph 13.01 for definition.

18. *Drawings*—The part of the Contract that graphically shows the scope, extent, and character of the Work to be performed by Contractor.

19. *Effective Date of the Contract*—The date, indicated in the Agreement, on which the Contract becomes effective.

Copyright© 2018 National Society of Professional Engineers, American Council of Engineering Companies, and American Society of Civil Engineers. All rights reserved.

20. *Electronic Document*—Any Project-related correspondence, attachments to correspondence, data, documents, drawings, information, or graphics, including but not limited to Shop Drawings and other Submittals, that are in an electronic or digital format.

21. *Electronic Means*—Electronic mail (email), upload/download from a secure Project website, or other communications methods that allow: (a) the transmission or communication of Electronic Documents; (b) the documentation of transmissions, including sending and receipt; (c) printing of the transmitted Electronic Document by the recipient; (d) the storage and archiving of the Electronic Document by sender and recipient; and (e) the use by recipient of the Electronic Document for purposes permitted by this Contract. Electronic Means does not include the use of text messaging, or of Facebook, Twitter, Instagram, or similar social media services for transmission of Electronic Documents.

22. *Engineer*—The individual or entity named as such in the Agreement.

23. *Field Order*—A written order issued by Engineer which requires minor changes in the Work but does not change the Contract Price or the Contract Times.

24. *Hazardous Environmental Condition*—The presence at the Site of Constituents of Concern in such quantities or circumstances that may present a danger to persons or property exposed thereto.

    a. The presence at the Site of materials that are necessary for the execution of the Work, or that are to be incorporated into the Work, and that are controlled and contained pursuant to industry practices, Laws and Regulations, and the requirements of the Contract, is not a Hazardous Environmental Condition.

    b. The presence of Constituents of Concern that are to be removed or remediated as part of the Work is not a Hazardous Environmental Condition.

    c. The presence of Constituents of Concern as part of the routine, anticipated, and obvious working conditions at the Site, is not a Hazardous Environmental Condition.

25. *Laws and Regulations; Laws or Regulations*—Any and all applicable laws, statutes, rules, regulations, ordinances, codes, and binding decrees, resolutions, and orders of any and all governmental bodies, agencies, authorities, and courts having jurisdiction.

26. *Liens*—Charges, security interests, or encumbrances upon Contract-related funds, real property, or personal property.

27. *Milestone*—A principal event in the performance of the Work that the Contract requires Contractor to achieve by an intermediate completion date, or by a time prior to Substantial Completion of all the Work.

28. *Notice of Award*—The written notice by Owner to a Bidder of Owner's acceptance of the Bid.

29. *Notice to Proceed*—A written notice by Owner to Contractor fixing the date on which the Contract Times will commence to run and on which Contractor shall start to perform the Work.

Copyright© 2018 National Society of Professional Engineers, American Council of Engineering Companies, and American Society of Civil Engineers. All rights reserved.

30. *Owner*—The individual or entity with which Contractor has contracted regarding the Work, and which has agreed to pay Contractor for the performance of the Work, pursuant to the terms of the Contract.

31. *Progress Schedule*—A schedule, prepared and maintained by Contractor, describing the sequence and duration of the activities comprising Contractor's plan to accomplish the Work within the Contract Times.

32. *Project*—The total undertaking to be accomplished for Owner by engineers, contractors, and others, including planning, study, design, construction, testing, commissioning, and start-up, and of which the Work to be performed under the Contract Documents is a part.

33. *Project Manual*—The bound documentary information prepared for bidding and constructing the Work. A listing of the contents of the Project Manual, which may be bound in one or more volumes, is contained in the table(s) of contents.

34. *Punch List* - the detailed list of incomplete, unsatisfactory or unacceptable, or defective items that Contractor is required to complete prior to final payment that is generated in accordance with Paragraph 14.06 of the General Conditions."

35. *Resident Project Representative*—The authorized representative of Engineer assigned to assist Engineer at the Site. As used herein, the term Resident Project Representative (RPR) includes any assistants or field staff of Resident Project Representative.

36. *Samples*—Physical examples of materials, equipment, or workmanship that are representative of some portion of the Work and that establish the standards by which such portion of the Work will be judged.

37. *Schedule of Submittals*—A schedule, prepared and maintained by Contractor, of required submittals and the time requirements for Engineer's review of the submittals.

38. *Schedule of Values*—A schedule, prepared and maintained by Contractor, allocating portions of the Contract Price to various portions of the Work and used as the basis for reviewing Contractor's Applications for Payment.

39. *Shop Drawings*—All drawings, diagrams, illustrations, schedules, and other data or information that are specifically prepared or assembled by or for Contractor and submitted by Contractor to illustrate some portion of the Work. Shop Drawings, whether approved or not, are not Drawings and are not Contract Documents.

40. *Site*—Lands or areas indicated in the Contract Documents as being furnished by Owner upon which the Work is to be performed, including rights-of-way and easements, and such other lands or areas furnished by Owner which are designated for the use of Contractor.

41. *Specifications*—The part of the Contract that consists of written requirements for materials, equipment, systems, standards, and workmanship as applied to the Work, and certain administrative requirements and procedural matters applicable to the Work.

42. *Subcontractor*—An individual or entity having a direct contract with Contractor or with any other Subcontractor for the performance of a part of the Work.

Copyright© 2018 National Society of Professional Engineers, American Council of Engineering Companies, and American Society of Civil Engineers. All rights reserved.

43. *Submittal*—A written or graphic document, prepared by or for Contractor, which the Contract Documents require Contractor to submit to Engineer, or that is indicated as a Submittal in the Schedule of Submittals accepted by Engineer. Submittals may include Shop Drawings and Samples; schedules; product data; Owner-delegated designs; sustainable design information; information on special procedures; testing plans; results of tests and evaluations, source quality-control testing and inspections, and field or Site quality-control testing and inspections; warranties and certifications; Suppliers' instructions and reports; records of delivery of spare parts and tools; operations and maintenance data; Project photographic documentation; record documents; and other such documents required by the Contract Documents. Submittals, whether or not approved or accepted by Engineer, are not Contract Documents. Change Proposals, Change Orders, Claims, notices, Applications for Payment, and requests for interpretation or clarification are not Submittals.

44. *Substantial Completion*—The time and date at which the Work (or a specified part thereof) has progressed to the point where, in the opinion of Engineer, the Work (or a specified part thereof) is sufficiently complete, in accordance with the Contract Documents, so that the Work (or a specified part thereof) can be utilized for the purposes for which it is intended. The terms "substantially complete" and "substantially completed" as applied to all or part of the Work refer to Substantial Completion of such Work.

45. *Successful Bidder*—The Bidder to which the Owner makes an award of contract.

46. *Supplementary Conditions*—The part of the Contract that amends or supplements these General Conditions.

47. *Supplier*—A manufacturer, fabricator, supplier, distributor, or vendor having a direct contract with Contractor or with any Subcontractor to furnish materials or equipment to be incorporated in the Work by Contractor or a Subcontractor.

48. *Technical Data*

    a. Those items expressly identified as Technical Data in the Supplementary Conditions, with respect to either (1) existing subsurface conditions at or adjacent to the Site, or existing physical conditions at or adjacent to the Site including existing surface or subsurface structures (except Underground Facilities) or (2) Hazardous Environmental Conditions at the Site.

    b. If no such express identifications of Technical Data have been made with respect to conditions at the Site, then Technical Data is defined, with respect to conditions at the Site under Paragraphs 5.03, 5.04, and 5.06, as the data contained in boring logs, recorded measurements of subsurface water levels, assessments of the condition of subsurface facilities, laboratory test results, and other factual, objective information regarding conditions at the Site that are set forth in any geotechnical, environmental, or other Site or facilities conditions report prepared for the Project and made available to Contractor.

Copyright© 2018 National Society of Professional Engineers, American Council of Engineering Companies, and American Society of Civil Engineers. All rights reserved.

c. Information and data regarding the presence or location of Underground Facilities are not intended to be categorized, identified, or defined as Technical Data, and instead Underground Facilities are shown or indicated on the Drawings.

49. *Underground Facilities*—All active or not-in-service underground lines, pipelines, conduits, ducts, encasements, cables, wires, manholes, vaults, tanks, tunnels, or other such facilities or systems at the Site, including but not limited to those facilities or systems that produce, transmit, distribute, or convey telephone or other communications, cable television, fiber optic transmissions, power, electricity, light, heat, gases, oil, crude oil products, liquid petroleum products, water, steam, waste, wastewater, storm water, other liquids or chemicals, or traffic or other control systems. An abandoned facility or system is not an Underground Facility.

50. *Unit Price Work*—Work to be paid for on the basis of unit prices.

51. *Work*—The entire construction or the various separately identifiable parts thereof required to be provided under the Contract Documents. Work includes and is the result of performing or providing all labor, services, and documentation necessary to produce such construction; furnishing, installing, and incorporating all materials and equipment into such construction; and may include related services such as testing, start-up, and commissioning, all as required by the Contract Documents.

52. Emergency *Work Change Directive*—A written directive to Contractor issued on or after the Effective Date of the Contract, signed by Owner and recommended by Engineer, ordering an addition, deletion, or revision in the Work due to an emergency that prevents the parties from using the Change Order process.

1.02 *Terminology*

A. The words and terms discussed in Paragraphs 1.02.B, C, D, and E are not defined terms that require initial capital letters, but, when used in the Bidding Requirements or Contract Documents, have the indicated meaning.

B. *Intent of Certain Terms or Adjectives*: The Contract Documents include the terms "as allowed," "as approved," "as ordered," "as directed" or terms of like effect or import to authorize an exercise of professional judgment by Engineer. In addition, the adjectives "reasonable," "suitable," "acceptable," "proper," "satisfactory," or adjectives of like effect or import are used to describe an action or determination of Engineer as to the Work. It is intended that such exercise of professional judgment, action, or determination will be solely to evaluate, in general, the Work for compliance with the information in the Contract Documents and with the design concept of the Project as a functioning whole as shown or indicated in the Contract Documents (unless there is a specific statement indicating otherwise). The use of any such term or adjective is not intended to and shall not be effective to assign to Engineer any duty or authority to supervise or direct the performance of the Work, or any duty or authority to undertake responsibility contrary to the provisions of Article 10 or any other provision of the Contract Documents.

C. *Day*: The word "day" means a calendar day of 24 hours measured from midnight to the next midnight, including weekends and legal holidays unless otherwise specifically defined.

Copyright© 2018 National Society of Professional Engineers, American Council of Engineering Companies, and American Society of Civil Engineers. All rights reserved.

D. *Defective*: The word "defective," when modifying the word "Work," refers to Work that is unsatisfactory, faulty, or deficient in that it:

1. does not conform to the Contract Documents;

2. does not meet the requirements of any applicable inspection, reference standard, test, or approval referred to in the Contract Documents; or

3. has been damaged prior to Engineer's recommendation of final payment (unless responsibility for the protection thereof has been assumed by Owner at Substantial Completion in accordance with Paragraph 15.03 or Paragraph 15.04).

E. *Furnish, Install, Perform, Provide*

1. The word "furnish," when used in connection with services, materials, or equipment, means to supply and deliver said services, materials, or equipment to the Site (or some other specified location) ready for use or installation and in usable or operable condition.

2. The word "install," when used in connection with services, materials, or equipment, means to put into use or place in final position said services, materials, or equipment complete and ready for intended use.

3. The words "perform" or "provide," when used in connection with services, materials, or equipment, means to furnish and install said services, materials, or equipment complete and ready for intended use.

4. If the Contract Documents establish an obligation of Contractor with respect to specific services, materials, or equipment, but do not expressly use any of the four words "furnish," "install," "perform," or "provide," then Contractor shall furnish and install said services, materials, or equipment complete and ready for intended use.

F. *Contract Price or Contract Times*: References to a change in "Contract Price or Contract Times" or "Contract Times or Contract Price" or similar, indicate that such change applies to (1) Contract Price, (2) Contract Times, or (3) both Contract Price and Contract Times, as warranted, even if the term "or both" is not expressed.

G. Unless stated otherwise in the Contract Documents, words or phrases that have a well-known technical or construction industry or trade meaning are used in the Contract Documents in accordance with such recognized meaning.

ARTICLE 2—PRELIMINARY MATTERS

2.01 *Delivery of Performance and Payment Bonds; Evidence of Insurance*

A. *Performance and Payment Bonds*: When Contractor delivers the signed counterparts of the Agreement to Owner, Contractor shall also deliver to Owner the performance bond and payment bond (if the Contract requires Contractor to furnish such bonds).

B. *Evidence of Contractor's Insurance*: When Contractor delivers the signed counterparts of the Agreement to Owner, Contractor shall also deliver to Owner, with copies to each additional insured (as identified in the Contract), the certificates, endorsements, and other evidence of insurance required to be provided by Contractor in accordance with Article 6, except to the

Copyright© 2018 National Society of Professional Engineers, American Council of Engineering Companies, and American Society of Civil Engineers. All rights reserved.

extent the Supplementary Conditions expressly establish other dates for delivery of specific insurance policies.

C. Deleted in its entirety.

2.02 *Copies of Documents*

A. Owner shall furnish to Contractor four printed copies of the Contract (including one fully signed counterpart of the Agreement), and one copy in electronic portable document format (PDF). Additional printed copies will be furnished upon request at the cost of reproduction.

B. Owner shall maintain and safeguard at least one original printed record version of the Contract, including Drawings and Specifications signed and sealed by Engineer and other design professionals. Owner shall make such original printed record version of the Contract available to Contractor for review. Owner may delegate the responsibilities under this provision to Engineer.

2.03 *Before Starting Construction*

A. *Preliminary Schedules*: Within 10 days after Contract award or at the preconstruction conference (or as otherwise required by the Contract Documents), or whichever is later, Contractor shall submit to Engineer for timely review.

1. a preliminary Progress Schedule indicating the times (numbers of days or dates) for starting and completing the various stages of the Work, including any Milestones specified in the Contract, and identifying the Substantial Completion date;

2. a preliminary Schedule of Submittals; and

3. a preliminary Schedule of Values for all of the Work which includes quantities and prices of items which when added together equal the Contract Price and subdivides the Work into component parts in sufficient detail to serve as the basis for progress payments during performance of the Work. Such prices will include an appropriate amount of overhead and profit applicable to each item of Work.

2.04 *Preconstruction Conference; Designation of Authorized Representatives*

A. Before any Work at the Site is started, a conference attended by Owner, Contractor, Engineer, and others as appropriate will be held to establish a working understanding among the parties as to the Work, and to discuss the schedules referred to in Paragraph 2.03.A, procedures for handling Shop Drawings, Samples, and other Submittals, processing Applications for Payment, electronic or digital transmittals, and maintaining required records.

B. At this conference Owner and Contractor each shall designate, in writing, a specific individual to act as its authorized representative with respect to the services and responsibilities under the Contract. Such individuals shall have the authority to transmit and receive information, render decisions relative to the Contract, and otherwise act on behalf of each respective party.

2.05 *Acceptance of Schedules*

A. The Engineer will review and respond to the Contractor within 15 calendar days of receipt of the Progress Schedule. The Engineer will return inadequate Progress Schedules to the

Copyright© 2018 National Society of Professional Engineers, American Council of Engineering Companies, and American Society of Civil Engineers. All rights reserved.

Contractor for corrections. Resubmit a corrected schedule within 15 calendar days from date of the Engineer's return transmittal.

1. The Progress Schedule will be acceptable to Engineer and Owner if it provides an orderly progression of the Work to completion within the Contract Times and identifies Contractor's critical path sequence of scheduled activities with the earliest start dates for scheduled activities, the earliest finish date for scheduled activities, the latest start date for scheduled activities and latest finish date for scheduled activities. All float in the Progress Schedule shall belong to Owner in order to offset a delay attributable to Owner or its agents. Such acceptance will not impose on Engineer or Owner responsibility for the Progress Schedule, for sequencing, scheduling, or progress of the Work, nor interfere with or relieve Contractor from Contractor's full responsibility therefor.
2. Contractor's Schedule of Submittals will be acceptable to Engineer and Owner if it provides a workable arrangement for reviewing and processing the required submittals.
3. Contractor's Schedule of Values will be acceptable to Engineer and Owner as to form and substance if it provides a reasonable allocation of the Contract Price to the component parts of the Work.
4. If a schedule is not acceptable, Contractor will have an additional 10 days to revise and resubmit the schedule.
5. If Contractor submits a schedule indicating an intention to achieve completion of the Work prior to contractually required dates, including milestones, no liability of the Owner to the Contractor for any failure of the Contractor to complete early shall be created, whether or not the Owner approves such schedule.
6. The Contractor acknowledges that the Owner may retain the services of a scheduling consultant at the Owner's expense. The Contractor shall cooperate with any such scheduling consultant at the Owner's direction, including without limitation, with regard to the preparation of the Project schedule.

2.06 *Electronic Transmittals*

A. Except as otherwise stated elsewhere in the Contract, the Owner, Engineer, and Contractor may send, and shall accept, Electronic Documents transmitted by Electronic Means.

B. If the Contract does not establish protocols for Electronic Means, then Owner, Engineer, and Contractor shall jointly develop such protocols.

C. Subject to any governing protocols for Electronic Means, when transmitting Electronic Documents by Electronic Means, the transmitting party makes no representations as to long-term compatibility, usability, or readability of the Electronic Documents resulting from the recipient's use of software application packages, operating systems, or computer hardware differing from those used in the drafting or transmittal of the Electronic Documents.

Copyright© 2018 National Society of Professional Engineers, American Council of Engineering Companies, and American Society of Civil Engineers. All rights reserved.

ARTICLE 3—CONTRACT DOCUMENTS: INTENT, REQUIREMENTS, REUSE

3.01 *Intent*

A. The Contract Documents are complementary; what is required by one Contract Document is as binding as if required by all.

B. It is the intent of the Contract Documents to describe a functionally complete Project (or part thereof) to be constructed in accordance with the Contract Documents.

C. Unless otherwise stated in the Contract Documents, if there is a discrepancy between the electronic versions of the Contract Documents (including any printed copies derived from such electronic versions) and the printed record version, the printed record version will govern.

D. The Contract supersedes prior negotiations, representations, and agreements, whether written or oral.

E. Engineer will issue clarifications and interpretations of the Contract Documents as provided herein.

F. Any provision or part of the Contract Documents held to be void or unenforceable under any Law or Regulation will be deemed stricken, and all remaining provisions will continue to be valid and binding upon Owner and Contractor, which agree that the Contract Documents will be reformed to replace such stricken provision or part thereof with a valid and enforceable provision that comes as close as possible to expressing the intention of the stricken provision.

G. Nothing in the Contract Documents creates:

1. any contractual relationship between Owner or Engineer and any Subcontractor, Supplier, or other individual or entity performing or furnishing any of the Work, for the benefit of such Subcontractor, Supplier, or other individual or entity; or

2. any obligation on the part of Owner or Engineer to pay or to see to the payment of any money due any such Subcontractor, Supplier, or other individual or entity, except as may otherwise be required by Laws and Regulations.

3.02 *Reference Standards*

A. *Standards Specifications, Codes, Laws and Regulations*

1. Reference in the Contract Documents to standard specifications, manuals, reference standards, or codes of any technical society, organization, or association, or to Laws or Regulations, whether such reference be specific or by implication, means the standard specification, manual, reference standard, code, or Laws or Regulations in effect at the time of opening of Bids (or on the Effective Date of the Contract if there were no Bids), except as may be otherwise specifically stated in the Contract Documents.

2. No provision of any such standard specification, manual, reference standard, or code, and no instruction of a Supplier, will be effective to change the duties or responsibilities of Owner, Contractor, or Engineer from those set forth in the part of the Contract Documents prepared by or for Engineer. No such provision or instruction shall be effective to assign to Owner or Engineer any duty or authority to supervise or direct the

Copyright© 2018 National Society of Professional Engineers, American Council of Engineering Companies, and American Society of Civil Engineers. All rights reserved.

performance of the Work, or any duty or authority to undertake responsibility inconsistent with the provisions of the part of the Contract Documents prepared by or for Engineer.

3.03 *Reporting and Resolving Discrepancies*

A. *Reporting Discrepancies*

1. *Contractor's Verification of Figures and Field Measurements*: Before undertaking each part of the Work, Contractor shall carefully study the Contract Documents, and check and verify pertinent figures and dimensions therein, particularly with respect to applicable field measurements. Contractor shall promptly report in writing to Engineer any conflict, error, ambiguity, or discrepancy that Contractor discovers, or has actual knowledge of, and shall not proceed with any Work affected thereby until the conflict, error, ambiguity, or discrepancy is resolved by a clarification or interpretation by Engineer, or by an amendment or supplement to the Contract issued pursuant to Paragraph 11.01.

2. *Contractor's Review of Contract Documents*: If, before or during the performance of the Work, Contractor discovers any conflict, error, ambiguity, or discrepancy within the Contract Documents, or between the Contract Documents and (a) any applicable Law or Regulation, (b) actual field conditions, (c) any standard specification, manual, reference standard, or code, or (d) any instruction of any Supplier, then Contractor shall promptly report it to Engineer in writing. Contractor shall not proceed with the Work affected thereby (except in an emergency as required by Paragraph 7.15) until the conflict, error, ambiguity, or discrepancy is resolved, by a clarification or interpretation by Engineer, or by an amendment or supplement to the Contract issued pursuant to Paragraph 11.01.

3. Contractor shall not be liable to Owner or Engineer for failure to report any conflict, error, ambiguity, or discrepancy in the Contract Documents unless Contractor had actual knowledge thereof or could have discovered the conflict or error by careful review of the Contract Documents including pertinent figures and applicable field measurements and dimensions therein.

B. *Resolving Discrepancies*

1. Except as may be otherwise specifically stated in the Contract Documents, the provisions of the part of the Contract Documents prepared by or for Engineer take precedence in resolving any conflict, error, ambiguity, or discrepancy between such provisions of the Contract Documents and:

   a. the provisions of any standard specification, manual, reference standard, or code, or the instruction of any Supplier (whether or not specifically incorporated by reference as a Contract Document); or

   b. the provisions of any Laws or Regulations applicable to the performance of the Work (unless such an interpretation of the provisions of the Contract Documents would result in violation of such Law or Regulation).

   c. In the event there is a discrepancy or conflict in the Drawings and Specifications applicable to a particular detail or assembly of the Work, Contractor must promptly seek clarification from Engineer before proceeding with the Work. Subject to

Copyright© 2018 National Society of Professional Engineers, American Council of Engineering Companies, and American Society of Civil Engineers. All rights reserved.

Paragraph 3.03.A.3. above, if Contractor proceeds with the Work without seeking such clarification, Contractor will be bound by the stricter and more expensive detail or assembly. Contractor agrees and recognizes that in agreeing to the Contract Price it has factored in the costs associated with installing the stricter and more expensive detail or assembly.

3.04 *Requirements of the Contract Documents*

A. During the performance of the Work and until final payment, Contractor and Owner shall submit to the Engineer in writing all matters in question concerning the requirements of the Contract Documents (sometimes referred to as requests for information or interpretation—RFIs), or relating to the acceptability of the Work under the Contract Documents, as soon as possible after such matters arise. Engineer will be the initial interpreter of the requirements of the Contract Documents, and judge of the acceptability of the Work.

B. Engineer will, with reasonable promptness, render a written clarification, interpretation, or decision on the issue submitted, or initiate an amendment or supplement to the Contract Documents. Engineer's written clarification, interpretation, or decision will be final and binding on Contractor, unless it appeals by submitting a Change Proposal, and on Owner, unless it appeals by filing a Claim.

C. If a submitted matter in question concerns terms and conditions of the Contract Documents that do not involve (1) the performance or acceptability of the Work under the Contract Documents, (2) the design (as set forth in the Drawings, Specifications, or otherwise), or (3) other engineering or technical matters, then Engineer will promptly notify Owner and Contractor in writing that Engineer is unable to provide a decision or interpretation. If Owner and Contractor are unable to agree on resolution of such a matter in question, either party may pursue resolution as provided in Article 12.

3.05 *Reuse of Documents*

A. Contractor and its Subcontractors and Suppliers shall not:

1. have or acquire any title to or ownership rights in any of the Drawings, Specifications, or other documents (or copies of any thereof) prepared by or bearing the seal of Engineer or its consultants, including electronic media versions, or reuse any such Drawings, Specifications, other documents, or copies thereof on extensions of the Project or any other project without written consent of Owner and Engineer and specific written verification or adaptation by Engineer; or

2. have or acquire any title or ownership rights in any other Contract Documents, reuse any such Contract Documents for any purpose without Owner's express written consent, or violate any copyrights pertaining to such Contract Documents.

B. The prohibitions of this Paragraph 3.05 will survive final payment, or termination of the Contract. Nothing herein precludes Contractor from retaining copies of the Contract Documents for record purposes.

Copyright© 2018 National Society of Professional Engineers, American Council of Engineering Companies, and American Society of Civil Engineers. All rights reserved.

ARTICLE 4—COMMENCEMENT AND PROGRESS OF THE WORK

4.01 *Commencement of Contract Times; Notice to Proceed*

A. The Contract Times shall not commence to run and Contractor shall not commence the Work until Owner issues a Notice to Proceed. A Notice to Proceed may be issued by Owner at any time after the Effective Date of the Contract.

4.02 *Starting the Work*

A. Contractor shall start to perform the Work on the date specified in the Notice to Proceed which shall cause the Contract Times to commence to run. No Work may be done at the Site prior to such date.

4.03 *Reference Points*

A. Owner shall provide engineering surveys to establish reference points for construction which in Engineer's judgment are necessary to enable Contractor to proceed with the Work. Contractor shall be responsible for laying out the Work, shall protect and preserve the established reference points and property monuments, and shall make no changes or relocations without the prior written approval of Owner. Contractor shall report to Engineer whenever any reference point or property monument is lost or destroyed or requires relocation because of necessary changes in grades or locations, and shall be responsible for the accurate replacement or relocation of such reference points or property monuments by professionally qualified personnel.

B. Contractor shall lay-out and verify all field dimensions and measurements at the Site before proceeding with any portion of the Work.

4.04 *Progress Schedule*

A. Contractor shall adhere to the Progress Schedule established in accordance with Paragraph 2.05 as it may be adjusted from time to time as provided below.

1. Contractor shall submit to Engineer for acceptance (to the extent indicated in Paragraph 2.05) proposed adjustments in the Progress Schedule that will not result in changing the Contract Times.

2. Proposed adjustments in the Progress Schedule that will change the Contract Times must be submitted in accordance with the requirements of Article 11.

B. Contractor shall carry on the Work and adhere to the Progress Schedule during all disputes or disagreements with Owner. No Work will be delayed or postponed pending resolution of any disputes or disagreements, or during any appeal process, except as permitted by Paragraph 16.04, or as Owner and Contractor may otherwise agree in writing.

4.05 *Delays in Contractor's Progress*

A. If Owner, Engineer, or anyone for whom Owner is responsible, delays, disrupts, or interferes with the performance or progress of the Work, then Contractor shall only be entitled to an equitable adjustment in Contract Times.

Copyright© 2018 National Society of Professional Engineers, American Council of Engineering Companies, and American Society of Civil Engineers. All rights reserved.

B. Contractor shall not be entitled to an adjustment in Contract Price or Contract Times for delay, disruption, or interference caused by or within the control of Contractor. Delay, disruption, and interference attributable to and within the control of a Subcontractor or Supplier shall be deemed to be within the control of Contractor.

C. If Contractor's performance or progress is delayed, disrupted, or interfered with by unanticipated causes not the fault of and beyond the control of Owner, Contractor, and those for which they are responsible, then Contractor shall be entitled to an equitable adjustment in Contract Times. Such an adjustment will be Contractor's sole and exclusive remedy for the delays, disruption, and interference described in this paragraph. Unanticipated causes of delay, disruption, or interference that may give rise to an adjustment in Contract Times under this paragraph include but are not limited to the following:

1. Severe and unavoidable natural catastrophes such as fires, floods, epidemics, and earthquakes;

2. Acts or failures to act of third-party utility owners or other third-party entities (other than those third-party utility owners or other third-party entities performing other work at or adjacent to the Site as arranged by or under contract with Owner, as contemplated in Article 8); and

3. Acts of war or terrorism.

D. Contractor's entitlement to an adjustment of Contract Times is limited as follows:

1. Contractor's entitlement to an adjustment of the Contract Times is conditioned on the delay, disruption, or interference adversely affecting an activity on the critical path to completion of the Work, as of the time of the delay, disruption, or interference.

2. Deleted in its entirety.

3. Adjustments of Contract Times are subject to the provisions of Article 11.

E. Each Contractor request or Change Proposal seeking an increase in Contract Times must be supplemented by supporting data that sets forth in detail the following:

1. The circumstances that form the basis for the requested adjustment;

2. The date upon which each cause of delay, disruption, or interference began to affect the progress of the Work;

3. The date upon which each cause of delay, disruption, or interference ceased to affect the progress of the Work;

4. The number of days' increase in Contract Times claimed as a consequence of each such cause of delay, disruption, or interference; and

5. Deleted in its entirety.

Contractor shall also furnish such additional supporting documentation as Owner or Engineer may require including, where appropriate, a revised progress schedule indicating all the activities affected by the delay, disruption, or interference, and an explanation of the effect of the delay, disruption, or interference on the critical path to completion of the Work.

Copyright© 2018 National Society of Professional Engineers, American Council of Engineering Companies, and American Society of Civil Engineers. All rights reserved.

F. Delays, disruption, and interference to the performance or progress of the Work resulting from the existence of a differing subsurface or physical condition, an Underground Facility that was not shown or indicated by the Contract Documents, or not shown or indicated with reasonable accuracy, and those resulting from Hazardous Environmental Conditions, are governed by Article 5, together with the provisions of Paragraphs 4.05.D and 4.05.E.

G. Paragraph 8.03 addresses delays, disruption, and interference to the performance or progress of the Work resulting from the performance of certain other work at or adjacent to the Site.

ARTICLE 5—SITE; SUBSURFACE AND PHYSICAL CONDITIONS; HAZARDOUS ENVIRONMENTAL CONDITIONS

5.01 *Availability of Lands*

A. Owner shall furnish the Site. Owner shall notify Contractor in writing of any encumbrances or restrictions not of general application but specifically related to use of the Site with which Contractor must comply in performing the Work.

B. Deleted in its entirety.

C. Contractor shall provide for all additional lands and access thereto that may be required for temporary construction facilities, staging, or storage of materials and equipment. Contractor shall have the obligation to restore the additional lands to their original condition.

5.02 *Use of Site and Other Areas*

A. *Limitation on Use of Site and Other Areas*

1. Contractor shall confine construction equipment, temporary construction facilities, the storage of materials and equipment, and the operations of workers to the Site, adjacent areas that Contractor has arranged to use through construction easements or otherwise, and other adjacent areas permitted by Laws and Regulations, and shall not unreasonably encumber the Site and such other adjacent areas with construction equipment or other materials or equipment. Contractor shall assume full responsibility for (a) damage to the Site; (b) damage to any such other adjacent areas used for Contractor's operations; (c) damage to any other adjacent land or areas, or to improvements, structures, utilities, or similar facilities located at such adjacent lands or areas; and (d) for injuries and losses sustained by the owners or occupants of any such land or areas; provided that such damage or injuries result from the performance of the Work or from other actions or conduct of the Contractor or those for which Contractor is responsible.

2. If a damage or injury claim is made by the owner or occupant of any such land or area because of the performance of the Work, or because of other actions or conduct of the Contractor or those for which Contractor is responsible, Contractor shall (a) take immediate corrective or remedial action as required by Paragraph 7.13, or otherwise; (b) promptly attempt to settle the claim as to all parties through negotiations with such owner or occupant, or otherwise resolve the claim by arbitration or other dispute resolution proceeding, or in a court of competent jurisdiction; and (c) to the fullest extent permitted by Laws and Regulations, indemnify and hold harmless Owner and Engineer, and the officers, directors, members, partners, employees, agents, consultants and

Copyright© 2018 National Society of Professional Engineers, American Council of Engineering Companies, and American Society of Civil Engineers. All rights reserved.

subcontractors of each and any of them, from and against any such claim, and against all costs, losses, and damages (including but not limited to all fees and charges of engineers, architects, attorneys, and other professionals and all court or arbitration or other dispute resolution costs) arising out of or relating to any claim or action, legal or equitable, brought by any such owner or occupant against Owner, Engineer, or any other party indemnified hereunder to the extent caused directly or indirectly, in whole or in part by, or based upon, Contractor's performance of the Work, or because of other actions or conduct of the Contractor or those for which Contractor is responsible.

B. *Removal of Debris During Performance of the Work*: During the progress of the Work the Contractor shall keep the Site and other adjacent areas free from accumulations of waste materials, rubbish, and other debris. The Contractor shall prevent paint, mortar, and concrete splatter on concrete sidewalks and asphalt paths. Any such splatter shall be immediately removed so no evidence of splatter remains. All construction debris shall be removed in a timely manner. Surrounding graded and grassed areas shall be regularly magnetically scanned to collect miscellaneous nails and other sharp objects; the Contractor shall remove such objects from the construction site. Removal and disposal of such waste materials, rubbish, and other debris will conform to applicable Laws and Regulations.

C. *Cleaning*: Prior to Substantial Completion of the Work Contractor shall clean the Site and the Work and make it ready for utilization by Owner. At the completion of the Work Contractor shall remove from the Site and adjacent areas all tools, appliances, construction equipment and machinery, and surplus materials and shall restore to original condition all property not designated for alteration by the Contract Documents.

D. *Loading of Structures*: Contractor shall not load nor permit any part of any structure to be loaded in any manner that will endanger the structure, nor shall Contractor subject any part of the Work or adjacent structures or land to stresses or pressures that will endanger them.

5.03 *Subsurface and Physical Conditions*

A. *Reports and Drawings*: The Supplementary Conditions identify:

1. Those reports of explorations and tests of subsurface conditions at or adjacent to the Site that contain Technical Data;

2. Those drawings of existing physical conditions at or adjacent to the Site, including those drawings depicting existing surface or subsurface structures at or adjacent to the Site (except Underground Facilities), that contain Technical Data; and

3. Technical Data contained in such reports and drawings.

B. *Underground Facilities*: Underground Facilities are shown or indicated on the Drawings, pursuant to Paragraph 5.05, and not in the drawings referred to in Paragraph 5.03.A. Information and data regarding the presence or location of Underground Facilities are not intended to be categorized, identified, or defined as Technical Data.

C. *Reliance by Contractor on Technical Data*: Contractor may rely upon the accuracy of the Technical Data expressly identified in the Supplementary Conditions with respect to such reports and drawings, but such reports and drawings are not Contract Documents and shall under no circumstances relieve Contractor from visiting the Site and becoming familiar with

Copyright© 2018 National Society of Professional Engineers, American Council of Engineering Companies, and American Society of Civil Engineers. All rights reserved.

and satisfied as to the general, local, and Site conditions that may affect cost, progress, and performance of the Work. If no such express identification has been made, then Contractor may rely upon the accuracy of the Technical Data as defined in Paragraph 1.01.A.46.b.

D. *Limitations of Other Data and Documents*: Except for such reliance on Technical Data, Contractor may not rely upon or make any claim against Owner or Engineer, or any of their officers, directors, members, partners, employees, agents, consultants, or subcontractors, with respect to:

1. the completeness of such reports and drawings for Contractor's purposes, including, but not limited to, any aspects of the means, methods, techniques, sequences, and procedures of construction to be employed by Contractor, and safety precautions and programs incident thereto;
2. other data, interpretations, opinions, and information contained in such reports or shown or indicated in such drawings;
3. the contents of other Site-related documents made available to Contractor, such as record drawings from other projects at or adjacent to the Site, or Owner's archival documents concerning the Site; or
4. any Contractor interpretation of or conclusion drawn from any Technical Data or any such other data, interpretations, opinions, or information.

5.04 *Differing Subsurface or Physical Conditions*

A. *Notice by Contractor*: If Contractor believes that any subsurface or physical condition that is uncovered or revealed at the Site:

1. is of such a nature as to establish that any Technical Data on which Contractor is entitled to rely as provided in Paragraph 5.03 is materially inaccurate;
2. is of such a nature as to require a change in the Drawings or Specifications;
3. differs materially from that shown or indicated in the Contract Documents; or
4. is of an unusual nature, and differs materially from conditions ordinarily encountered and generally recognized as inherent in work of the character provided for in the Contract Documents;

then Contractor shall, promptly after first becoming aware thereof and before further disturbing the subsurface or physical conditions or performing any Work in connection therewith (except in an emergency as required by Paragraph 7.15), notify Owner and Engineer in writing about such condition within 5 days. Contractor shall not further disturb such condition or perform any Work in connection therewith (except with respect to an emergency) until receipt of a written statement permitting Contractor to do so.

B. *Engineer's Review*: After receipt of written notice as required by the preceding paragraph, Engineer will promptly review the subsurface or physical condition in question; determine whether it is necessary for Owner to obtain additional exploration or tests with respect to the condition; conclude whether the condition falls within any one or more of the differing site condition categories in Paragraph 5.04.A; obtain any pertinent cost or schedule information from Contractor; prepare recommendations to Owner regarding the Contractor's resumption

Copyright© 2018 National Society of Professional Engineers, American Council of Engineering Companies, and American Society of Civil Engineers. All rights reserved.

of Work in connection with the subsurface or physical condition in question and the need for any change in the Drawings or Specifications; and advise Owner in writing of Engineer's findings, conclusions, and recommendations.

C. *Owner's Statement to Contractor Regarding Site Condition*: After receipt of Engineer's written findings, conclusions, and recommendations, Owner shall issue a written statement to Contractor (with a copy to Engineer) regarding the subsurface or physical condition in question, addressing the resumption of Work in connection with such condition, indicating whether any change in the Drawings or Specifications will be made, and adopting or rejecting Engineer's written findings, conclusions, and recommendations, in whole or in part.

D. *Early Resumption of Work*: If at any time Engineer determines that Work in connection with the subsurface or physical condition in question may resume prior to completion of Engineer's review or Owner's issuance of its statement to Contractor, because the condition in question has been adequately documented, and analyzed on a preliminary basis, then the Engineer may at its discretion instruct Contractor to resume such Work.

E. *Possible Price and Times Adjustments*

1. Contractor shall be entitled to an equitable adjustment in Contract Price or Contract Times, to the extent that the existence of a differing subsurface or physical condition, or any related delay, disruption, or interference, causes an increase or decrease in Contractor's cost of, or time required for, performance of the Work; subject, however, to the following:

    a. Such condition must fall within any one or more of the categories described in Paragraph 5.04.A;

    b. With respect to Work that is paid for on a unit price basis, any adjustment in Contract Price will be subject to the provisions of Paragraph 13.03; and,

    c. Contractor's entitlement to an adjustment of the Contract Times is subject to the provisions of Paragraphs 4.05.D and 4.05.E.

2. Contractor shall not be entitled to any adjustment in the Contract Price or Contract Times with respect to a subsurface or physical condition if:

    a. Contractor knew of the existence of such condition at the time Contractor made a commitment to Owner with respect to Contract Price and Contract Times by the submission of a Bid or becoming bound under a negotiated contract, or otherwise;

    b. The existence of such condition reasonably could have been discovered or revealed as a result of any examination, investigation, exploration, test, or study of the Site and contiguous areas expressly required by the Bidding Requirements or Contract Documents to be conducted by or for Contractor prior to Contractor's making such commitment; or

    c. Contractor failed to give the written notice required by Paragraph 5.04.A.

3. If Owner and Contractor agree regarding Contractor's entitlement to and the amount or extent of any adjustment in the Contract Price or Contract Times, then any such adjustment will be set forth in a Change Order.

Copyright© 2018 National Society of Professional Engineers, American Council of Engineering Companies, and American Society of Civil Engineers. All rights reserved.

4. Contractor may submit a Change Proposal regarding its entitlement to or the amount or extent of any adjustment in the Contract Price or Contract Times, no later than 30 days after Owner's issuance of the Owner's written statement to Contractor regarding the subsurface or physical condition in question.

F. *Underground Facilities; Hazardous Environmental Conditions*: Paragraph 5.05 governs rights and responsibilities regarding the presence or location of Underground Facilities. Paragraph 5.06 governs rights and responsibilities regarding Hazardous Environmental Conditions. The provisions of Paragraphs 5.03 and 5.04 are not applicable to the presence or location of Underground Facilities, or to Hazardous Environmental Conditions.

5.05 *Underground Facilities*

A. *Contractor's Responsibilities*: Unless it is otherwise expressly provided in the Supplementary Conditions, the cost of all of the following are included in the Contract Price, and Contractor shall have full responsibility for:

1. reviewing and checking all information and data regarding existing Underground Facilities at the Site;

2. complying with applicable state and local utility damage prevention Laws and Regulations;

3. verifying the actual location of those Underground Facilities shown or indicated in the Contract Documents as being within the area affected by the Work, by exposing such Underground Facilities during the course of construction;

4. coordination of the Work with the owners (including Owner) of such Underground Facilities, during construction; and

5. the safety and protection of all existing Underground Facilities at the Site, and repairing any damage thereto resulting from the Work.

B. *Notice by Contractor*: If Contractor believes that an Underground Facility that is uncovered or revealed at the Site was not shown or indicated on the Drawings, or was not shown or indicated on the Drawings with reasonable accuracy, then Contractor shall, promptly after first becoming aware thereof and before further disturbing conditions affected thereby or performing any Work in connection therewith (except in an emergency as required by Paragraph 7.15), notify Owner and Engineer in writing regarding such Underground Facility within 5 days.

C. *Engineer's Review*: Engineer will:

1. promptly review the Underground Facility and conclude whether such Underground Facility was not shown or indicated on the Drawings, or was not shown or indicated with reasonable accuracy;

2. identify and communicate with the owner of the Underground Facility; prepare recommendations to Owner (and if necessary issue any preliminary instructions to Contractor) regarding the Contractor's resumption of Work in connection with the Underground Facility in question;

Copyright© 2018 National Society of Professional Engineers, American Council of Engineering Companies, and American Society of Civil Engineers. All rights reserved.

3. obtain any pertinent cost or schedule information from Contractor; determine the extent, if any, to which a change is required in the Drawings or Specifications to reflect and document the consequences of the existence or location of the Underground Facility; and

4. advise Owner in writing of Engineer's findings, conclusions, and recommendations.

During such time, Contractor shall be responsible for the safety and protection of such Underground Facility.

D. *Owner's Statement to Contractor Regarding Underground Facility*: After receipt of Engineer's written findings, conclusions, and recommendations, Owner shall issue a written statement to Contractor (with a copy to Engineer) regarding the Underground Facility in question addressing the resumption of Work in connection with such Underground Facility, indicating whether any change in the Drawings or Specifications will be made, and adopting or rejecting Engineer's written findings, conclusions, and recommendations in whole or in part.

E. *Early Resumption of Work*: If at any time Engineer determines that Work in connection with the Underground Facility may resume prior to completion of Engineer's review or Owner's issuance of its statement to Contractor, because the Underground Facility in question and conditions affected by its presence have been adequately documented, and analyzed on a preliminary basis, then the Engineer may at its discretion instruct Contractor to resume such Work.

F. *Possible Price and Times Adjustments*

1. Contractor shall be entitled to an equitable adjustment in the Contract Price or Contract Times, to the extent that any existing Underground Facility at the Site that was not shown or indicated on the Drawings, or was not shown or indicated with reasonable accuracy, or any related delay, disruption, or interference, causes an increase or decrease in Contractor's cost of, or time required for, performance of the Work; subject, however, to the following:

   a. With respect to Work that is paid for on a unit price basis, any adjustment in Contract Price will be subject to the provisions of Paragraph 13.03;

   b. Contractor's entitlement to an adjustment of the Contract Times is subject to the provisions of Paragraphs 4.05.D and 4.05.E; and

   c. Contractor gave the notice required in Paragraph 5.05.B.

2. If Owner and Contractor agree regarding Contractor's entitlement to and the amount or extent of any adjustment in the Contract Price or Contract Times, then any such adjustment will be set forth in a Change Order.

3. Contractor may submit a Change Proposal regarding its entitlement to or the amount or extent of any adjustment in the Contract Price or Contract Times, no later than 30 days after Owner's issuance of the Owner's written statement to Contractor regarding the Underground Facility in question.

4. The information and data shown or indicated on the Drawings with respect to existing Underground Facilities at the Site is based on information and data (a) furnished by the owners of such Underground Facilities, or by others, (b) obtained from available records,

Copyright© 2018 National Society of Professional Engineers, American Council of Engineering Companies, and American Society of Civil Engineers. All rights reserved.

or (c) gathered in an investigation conducted in accordance with the current edition of ASCE 38, Standard Guideline for the Collection and Depiction of Existing Subsurface Utility Data, by the American Society of Civil Engineers. If such information or data is incorrect or incomplete, Contractor's remedies are limited to those set forth in this Paragraph 5.05.F.

5.06 *Hazardous Environmental Conditions at Site*

A. *Reports and Drawings*: The Supplementary Conditions identify:

1. those reports known to Owner relating to Hazardous Environmental Conditions that have been identified at or adjacent to the Site;

2. drawings known to Owner relating to Hazardous Environmental Conditions that have been identified at or adjacent to the Site; and

3. Technical Data contained in such reports and drawings.

B. *Reliance by Contractor on Technical Data Authorized*: Contractor may rely upon the accuracy of the Technical Data expressly identified in the Supplementary Conditions with respect to such reports and drawings, but such reports and drawings are not Contract Documents. If no such express identification has been made, then Contractor may rely on the accuracy of the Technical Data as defined in Paragraph 1.01.A.46.b. Except for such reliance on Technical Data, Contractor may not rely upon or make any claim against Owner or Engineer, or any of their officers, directors, members, partners, employees, agents, consultants, or subcontractors, with respect to:

1. the completeness of such reports and drawings for Contractor's purposes, including, but not limited to, any aspects of the means, methods, techniques, sequences and procedures of construction to be employed by Contractor, and safety precautions and programs incident thereto;

2. other data, interpretations, opinions, and information contained in such reports or shown or indicated in such drawings; or

3. any Contractor interpretation of or conclusion drawn from any Technical Data or any such other data, interpretations, opinions or information.

C. Contractor shall not be responsible for removing or remediating any Hazardous Environmental Condition encountered, uncovered, or revealed at the Site unless such removal or remediation is expressly identified in the Contract Documents to be within the scope of the Work.

D. Contractor shall be responsible for controlling, containing, and duly removing all Constituents of Concern brought to the Site by Contractor, Subcontractors, Suppliers, or anyone else for whom Contractor is responsible, and for any associated costs; and for the costs of removing and remediating any Hazardous Environmental Condition created by the presence of any such Constituents of Concern.

E. If Contractor encounters, uncovers, or reveals a Hazardous Environmental Condition whose removal or remediation is not expressly identified in the Contract Documents as being within the scope of the Work, or if Contractor or anyone for whom Contractor is responsible creates

Copyright© 2018 National Society of Professional Engineers, American Council of Engineering Companies, and American Society of Civil Engineers. All rights reserved.

a Hazardous Environmental Condition, then Contractor shall immediately: (1) secure or otherwise isolate such condition; (2) stop all Work in connection with such condition and in any area affected thereby (except in an emergency as required by Paragraph 7.15); and (3) notify Owner and Engineer (and promptly thereafter confirm such notice in writing) within 5 days of first becoming aware of the condition. Owner shall promptly consult with Engineer concerning the necessity for Owner to retain a qualified expert to evaluate such condition or take corrective action, if any. Promptly after consulting with Engineer, Owner shall take such actions as are necessary to permit Owner to timely obtain required permits and provide Contractor the written notice required by Paragraph 5.06.F. If Contractor or anyone for whom Contractor is responsible created the Hazardous Environmental Condition in question, then Owner may remove and remediate the Hazardous Environmental Condition, and impose a set-off against payments to account for the associated costs.

F. Contractor shall not resume Work in connection with such Hazardous Environmental Condition or in any affected area until after Owner has obtained any required permits related thereto, and delivered written notice to Contractor either (1) specifying that such condition and any affected area is or has been rendered safe for the resumption of Work, or (2) specifying any special conditions under which such Work may be resumed safely. An equitable adjustment shall be made in the Contract Price or Contract Time, or both, to the extent that (i) they are attributable to the existence or location of any Hazardous Environmental Condition that was not shown or indicated or not shown or indicated with reasonable accuracy in the Contract Documents or a report listed in the Supplemental Conditions, (ii) Contractor did not know of and could not reasonably have been expected to be aware of or to have anticipated the Hazardous Environmental Conditions, (iii) Contractor did not negligently, recklessly, or intentionally cause the Hazardous Environmental Condition, and (iv) Contractor notifies Owner and Engineer of such condition within 5 days after first becoming aware of such condition.

G. If Owner and Contractor cannot agree as to entitlement to or on the amount or extent, if any, of any adjustment in Contract Price or Contract Times, as a result of such Work stoppage, such special conditions under which Work is agreed to be resumed by Contractor, or any costs or expenses incurred in response to the Hazardous Environmental Condition, then within 30 days of Owner's written notice regarding the resumption of Work, Contractor may submit a Change Proposal, or Owner may impose a set-off. Entitlement to any such adjustment is subject to the provisions of Paragraphs 4.05.D, 4.05.E, 11.07, and 11.08.

H. If, after receipt of such written notice, Contractor does not agree to resume such Work based on a reasonable belief it is unsafe, or does not agree to resume such Work under such special conditions, then Owner may order the portion of the Work that is in the area affected by such condition to be deleted from the Work, following the contractual change procedures in Article 11. Owner may have such deleted portion of the Work performed by Owner's own forces or others in accordance with Article 8.

I. Deleted in its entirety.

J. Deleted in its entirety..

K. Deleted in its entirety.

Copyright© 2018 National Society of Professional Engineers, American Council of Engineering Companies, and American Society of Civil Engineers. All rights reserved.

ARTICLE 6—BONDS AND INSURANCE

6.01 *Performance, Payment, and Other Bonds*

A. Contractor shall furnish a payment and performance bond in accordance with Sec. 255.05, Florida Statutes, in an amount at least equal to the Contract Price, as security for the faithful performance and payment of Contractor's obligations under the Contract. These bonds must remain in effect until one year after the date when final payment becomes due or until completion of the correction period specified in Paragraph 15.08, whichever is later, except as provided otherwise by Laws or Regulations, the terms of a prescribed bond form, the Supplementary Conditions, or other provisions of the Contract. The obligations, duties, responsibilities, and requirements of Contractor set forth in this Contract shall be incorporated into Contractor's performance bond.

B. Contractor shall also furnish such other bonds (if any) as are required by the Supplementary Conditions or other provisions of the Contract.

C. All bonds must be in the form included in the Bidding Documents or otherwise specified by Owner prior to execution of the Contract~~,~~. A bond signed by an agent or attorney-in-fact must be accompanied by a certified copy of that individual's authority to bind the surety. The evidence of authority must show that it is effective on the date the agent or attorney-in-fact signed the accompanying bond. The payment and performance bonds shall be recorded in the public records of Volusia County, Florida.

D. Contractor shall obtain the required bonds from surety companies that are duly licensed or authorized, in Florida, to issue bonds in the required amounts.

E. If the surety on a bond furnished by Contractor is declared bankrupt or becomes insolvent, or the surety ceases to meet the requirements above, then Contractor shall promptly notify Owner and Engineer in writing and shall, within 20 days after the event giving rise to such notification, provide another bond and surety, both of which must comply with the bond and surety requirements above.

F. Prior to the date of commencement as set forth in the Notice to Proceed, if Contractor has failed to obtain a required bond, Owner may exclude the Contractor from the Site and exercise Owner's termination rights under Article 16.

G. Upon request to Owner from any Subcontractor, Supplier, or other person or entity claiming to have furnished labor, services, materials, or equipment used in the performance of the Work, Owner shall provide a copy of the payment bond to such person or entity.

H. Upon request to Contractor from any Subcontractor, Supplier, or other person or entity claiming to have furnished labor, services, materials, or equipment used in the performance of the Work, Contractor shall provide a copy of the payment bond to such person or entity.

6.02 *Insurance—General Provisions*

A. Contractor shall obtain and maintain insurance as required in this article and in the Supplementary Conditions. In the event of any conflict between this Paragraph 6.02 and the specific insurance requirements of Contractor set forth in Supplemental Conditions, the specific requirements in Supplemental Conditions shall govern.

Copyright© 2018 National Society of Professional Engineers, American Council of Engineering Companies, and American Society of Civil Engineers. All rights reserved.

B. All insurance required by the Contract to be purchased and maintained by Contractor shall be obtained from insurance companies that are duly licensed or authorized in the State of Florida to issue insurance policies for the required limits and coverages. Unless a different standard is indicated in the Supplementary Conditions, all companies that provide insurance policies required under this Contract shall have an A.M. Best rating of A-VII or better.

C. Alternative forms of insurance coverage, including but not limited to self-insurance and "Occupational Accident and Excess Employer's Indemnity Policies," are not sufficient to meet the insurance requirements of this Contract, unless expressly allowed in the Supplementary Conditions.

D. Contractor shall deliver to Owner, with copies to each additional insured identified in the Contract, certificates of insurance and endorsements establishing that Contractor has obtained and is maintaining the policies and coverages required by the Contract. Upon request by Owner or any other insured, Contractor shall also furnish other evidence of such required insurance, including but not limited to copies of policies, full disclosure of all relevant exclusions, and evidence of insurance required to be purchased and maintained by Subcontractors or Suppliers. In any documentation furnished under this provision, Contractor, Subcontractors, and Suppliers may block out (redact) (1) any confidential premium or pricing information and (2) any wording specific to a project or jurisdiction other than those applicable to this Contract.

E. Deleted in its entirety.

F. Failure of Owner to demand such certificates or other evidence of the Contractor's full compliance with these insurance requirements, or failure of Owner to identify a deficiency in compliance from the evidence provided, will not be construed as a waiver of the Contractor's obligation to obtain and maintain such insurance.

G. In addition to the liability insurance required to be provided by Contractor, the Owner, at Owner's option, may purchase and maintain Owner's own liability insurance. Owner's liability policies, if any, operate separately and independently from policies required to be provided by Contractor, and Contractor cannot rely upon Owner's liability policies for any of Contractor's obligations to the Owner, Engineer, or third parties.

H. Contractor shall require:

   1. Subcontractors to purchase and maintain worker's compensation, commercial general liability, and other insurance that is appropriate for their participation in the Project, and to name as additional insureds Owner and Engineer (and any other individuals or entities identified in the Supplementary Conditions as additional insureds on Contractor's liability policies) on each Subcontractor's commercial general liability insurance policy; and

   2. Suppliers to purchase and maintain insurance that is appropriate for their participation in the Project.

I. If Contractor does not purchase or maintain the insurance required by the Contract, Contractor shall notify the Owner in writing of such failure to purchase prior to the start of the Work, or of such failure to maintain prior to any change in the required coverage.

Copyright© 2018 National Society of Professional Engineers, American Council of Engineering Companies, and American Society of Civil Engineers. All rights reserved.

J. If Contractor has failed to obtain and maintain required insurance, Contractor's entitlement to enter or remain at the Site will end immediately, and Owner may impose an appropriate set-off against payment for any associated costs (including but not limited to the cost of purchasing necessary insurance coverage), and exercise Owner's termination rights under Article 16.

K. Without prejudice to any other right or remedy, if Contractor has failed to obtain required insurance, the Owner may elect (but is in no way obligated) to obtain equivalent insurance to protect Owner's interests at the expense of the Contactor who was required to provide such coverage, and the Contract Price will be adjusted accordingly.

L. Owner does not represent that insurance coverage and limits established in this Contract necessarily will be adequate to protect Contractor or Contractor's interests. Contractor is responsible for determining whether such coverage and limits are adequate to protect its interests, and for obtaining and maintaining any additional insurance that Contractor deems necessary.

M. The insurance and insurance limits required herein will not be deemed as a limitation on Contractor's liability, or that of its Subcontractors or Suppliers, under the indemnities granted to Owner and other individuals and entities in the Contract or otherwise.

N. All the policies of insurance required to be purchased and maintained under this Contract will contain a provision or endorsement that the coverage afforded will not be canceled, or renewal refused, until at least 10 days prior written notice has been given to the purchasing policyholder. Within three days of receipt of any such written notice, the purchasing policyholder shall provide a copy of the notice to each other insured and Engineer.

6.03 *Contractor's Insurance*

A. *Required Insurance*: Contractor shall purchase and maintain Worker's Compensation, Commercial General Liability, and other insurance pursuant to the specific requirements of the Supplementary Conditions.

B. *General Provisions*: The policies of insurance required by this Paragraph 6.03 as supplemented must:

1. include at least the specific coverages required;

2. be written for not less than the limits provided, or those required by Laws or Regulations, whichever is greater;

3. remain in effect at least until the Work is complete (as set forth in Paragraph 15.06.D), and longer if expressly required elsewhere in this Contract, and at all times thereafter when Contractor may be correcting, removing, or replacing defective Work as a warranty or correction obligation, or otherwise, or returning to the Site to conduct other tasks arising from the Contract;

4. apply with respect to the performance of the Work, whether such performance is by Contractor, any Subcontractor or Supplier, or by anyone directly or indirectly employed by any of them to perform any of the Work, or by anyone for whose acts any of them may be liable;

Copyright© 2018 National Society of Professional Engineers, American Council of Engineering Companies, and American Society of Civil Engineers. All rights reserved.

5. include completed operations coverage:

   a. Such insurance shall remain in effect for 10 years after Substantial Completion.

   b. Contractor shall furnish Owner and each additional insured identified in the Supplementary Conditions to whom a certificate of insurance has been issued, evidence satisfactory to Owner and any such additional insured of continuation of such insurance at final payment.

6.

7. include all necessary endorsements to support the stated requirements.

C. *Additional Insureds*: The Contractor's commercial general liability, automobile liability, employer's liability, umbrella or excess, pollution liability, and unmanned aerial vehicle liability policies, if required by this Contract, must:

1. include and list as additional insureds Owner, State of Florida, Department of Transportation and Engineer, and any individuals or entities identified as additional insureds in the Supplementary Conditions;

2. include coverage for the respective officers, directors, members, partners, employees, and consultants of all such additional insureds;

3. afford primary coverage to these additional insureds for all claims covered thereby (including as applicable those arising from both ongoing and completed operations);

4. not seek contribution from insurance maintained by the additional insured; and

5. as to commercial general liability insurance, apply to additional insureds with respect to liability caused in whole or in part by Contractor's acts or omissions, or the acts and omissions of those working on Contractor's behalf, in the performance of Contractor's operations.

6.04 *Builder's Risk and Other Property Insurance*

A. *Builder's Risk*: Unless otherwise provided in the Supplementary Conditions, Contractor shall purchase and maintain builder's risk insurance upon the Work on a completed value basis, in the amount of the Work's full insurable replacement cost (subject to such deductible amounts as may be provided in the Supplementary Conditions or required by Laws and Regulations). The specific requirements applicable to the builder's risk insurance are set forth in the Supplementary Conditions.

B. *Property Insurance for Facilities of Owner Where Work Will Occur*: Contractor is responsible for obtaining and maintaining property insurance covering each existing structure, building, or facility in which any part of the Work will occur, or to which any part of the Work will attach or be adjoined. Such property insurance will be written on a special perils (all-risk) form, on a replacement cost basis, providing coverage consistent with that required for the builder's risk insurance, and will be maintained until the Work is complete, as set forth in Paragraph 15.06.D. Such policy shall identify both Contractor and Owner as additional insureds. Contractor shall be solely responsible for any deductible.

Copyright© 2018 National Society of Professional Engineers, American Council of Engineering Companies, and American Society of Civil Engineers. All rights reserved.

C. *Property Insurance for Substantially Complete Facilities*: Promptly after Substantial Completion, and before actual occupancy or use of the substantially completed Work, Contractor will obtain property insurance for such substantially completed Work, and maintain such property insurance at least until the Work is complete, as set forth in Paragraph 15.06.D. Such property insurance will be written on a special perils (all-risk) form, on a replacement cost basis, and provide coverage consistent with that required for the builder's risk insurance. The builder's risk insurance may terminate upon written confirmation of Contractor's procurement of such property insurance.

D. *Partial Occupancy or Use by Owner*: If Owner will occupy or use a portion or portions of the Work prior to Substantial Completion of all the Work, as provided in Paragraph 15.04, then Owner through Contractor will provide advance notice of such occupancy or use to the builder's risk or all-risk insurer, and Contractor shall obtain an occupancy or use endorsement consenting to the continuation of coverage prior to Owner commencing such partial occupancy or use.

E. *Insurance of Other Property; Additional Insurance*: If the express insurance provisions of the Contract do not require or address the insurance of a property item or interest, then the entity or individual owning such property item will be responsible for insuring it. If Contractor elects to obtain other special insurance to be included in or supplement the builder's risk or property insurance policies provided under this Paragraph 6.04, it may do so at Contractor's expense.

6.05 *Property Losses; Subrogation*

A. The builder's risk insurance policy purchased and maintained in accordance with Paragraph 6.04 (or an installation floater policy if authorized by the Supplementary Conditions), will contain provisions to the effect that in the event of payment of any loss or damage the insurer will have no rights of recovery against any insureds thereunder, or against Engineer or its consultants, or their officers, directors, members, partners, employees, agents, consultants, or subcontractors.

1. Owner and Contractor waive all rights against each other and the respective officers, directors, members, partners, employees, agents, consultants, and subcontractors of each and any of them, for all losses and damages caused by, arising out of, or resulting from any of the perils, risks, or causes of loss covered by such policies and any other property insurance applicable to the Work; and, in addition, waive all such rights against Engineer, its consultants, all individuals or entities identified in the Supplementary Conditions as builder's risk or installation floater insureds, and the officers, directors, members, partners, employees, agents, consultants, and subcontractors of each and any of them, under such policies for losses and damages so caused.

2. None of the above waivers extends to the rights that any party making such waiver may have to the proceeds of insurance held by Contractor as trustee or fiduciary, or otherwise payable under any policy so issued.

B. Deleted in its entirety.

1. Deleted in its entirety.

C. Deleted in its entirety.

Copyright© 2018 National Society of Professional Engineers, American Council of Engineering Companies, and American Society of Civil Engineers. All rights reserved.

D. Contractor shall be responsible for assuring that each Subcontract contains provisions whereby the Subcontractor waives all rights against Owner, Contractor, all individuals or entities identified in the Supplementary Conditions as insureds, the Engineer and its consultants, and the officers, directors, members, partners, employees, agents, consultants, and subcontractors of each and any of them, for all losses and damages caused by, arising out of, relating to, or resulting from fire or other peril, risk, or cause of loss covered by builder's risk insurance, installation floater, and any other property insurance applicable to the Work.

6.06 *Receipt and Application of Property Insurance Proceeds*

A. Any insured loss under the builder's risk and other policies of property insurance required by Paragraph 6.04 will be adjusted and settled with the named insured that purchased the policy. Such named insured shall act as fiduciary for the other insureds, and give notice to such other insureds that adjustment and settlement of a claim is in progress. Any other insured may state its position regarding a claim for insured loss in writing within 15 days after notice of such claim.

B. Proceeds for such insured losses may be made payable by the insurer either jointly to multiple insureds, or to the named insured that purchased the policy in its own right and as fiduciary for other insureds, subject to the requirements of any applicable mortgage clause. A named insured receiving insurance proceeds under the builder's risk and other policies of insurance required by Paragraph 6.04 shall maintain such proceeds in a segregated account, and distribute such proceeds in accordance with such agreement as the parties in interest may reach, or as otherwise required under the dispute resolution provisions of this Contract or applicable Laws and Regulations.

C. If no other special agreement is reached, Contractor shall repair or replace the damaged Work, using allocated insurance proceeds.

D. Owner, at its sole discretion, may elect to fund the costs associated with any property insurance claim, excluding the deductible, and seek reimbursement from Contractor's policy that identifies both Contractor and Owner as named insureds. If Owner exercises this right, it shall have sole authority to settle and adjust any claim and receive reimbursement under the policy with the proceeds made payable to Owner. Contractor shall have the obligation to cooperate and comply with all terms and provisions of the policy and its failure to do so shall constitute a material breach of the Contract. If Owner does not elect this right, Contractor shall be required to fund the costs associated with any property insurance claim and seek reimbursement under the policy.

E. In the event of any conflict between this Paragraph 6.06 and the specific insurance requirements of Contractor set forth in the Supplemental Conditions, the specific insurance requirements in the Supplemental Conditions shall govern.

ARTICLE 7—CONTRACTOR'S RESPONSIBILITIES

7.01 *Contractor's Means and Methods of Construction*

A. Contractor shall be solely responsible for the means, methods, techniques, sequences, and procedures of construction.

Copyright© 2018 National Society of Professional Engineers, American Council of Engineering Companies, and American Society of Civil Engineers. All rights reserved.

B. If the Contract Documents note, or Contractor determines, that professional engineering or other design services are needed to carry out Contractor's responsibilities for construction means, methods, techniques, sequences, and procedures, or for Site safety, then Contractor shall cause such services to be provided by a properly licensed design professional, at Contractor's expense. Such services are not Owner-delegated professional design services under this Contract, and neither Owner nor Engineer has any responsibility with respect to (1) Contractor's determination of the need for such services, (2) the qualifications or licensing of the design professionals retained or employed by Contractor, (3) the performance of such services, or (4) any errors, omissions, or defects in such services.

7.02 *Supervision and Superintendence*

A. Contractor shall supervise, inspect, and direct the Work competently and efficiently, devoting such attention thereto and applying such skills and expertise as may be necessary to perform the Work in accordance with the Contract Documents.

B. At all times during the progress of the Work, Contractor shall assign a competent resident superintendent who will not be replaced without written notice to Owner and Engineer except under extraordinary circumstances.

7.03 *Labor; Working Hours*

A. Contractor shall provide competent, suitably qualified personnel to survey and lay out the Work and perform construction as required by the Contract Documents. Contractor shall maintain good discipline and order at the Site.

B. Contractor shall be fully responsible to Owner and Engineer for all acts and omissions of Contractor's employees; of Suppliers and Subcontractors, and their employees; and of any other individuals or entities performing or furnishing any of the Work, just as Contractor is responsible for Contractor's own acts and omissions. The Contractor agrees to remove from the Project an employee, Subcontractor, or Subcontractor employee that commits any breach of the Contract Documents or any breach of the Owner's written rules and regulations regarding jobsite conduct.

C. The Contractor shall enforce strict discipline and good order among the Contractor's employees and other persons carrying out the Work. Contractor shall not permit employment of unfit persons or persons not properly skilled in tasks assigned to them. The Contractor shall require all construction personnel to maintain a neat general appearance at all times. Shirts, trousers and proper shoes are required apparel. The display of vulgar words, signs or figures is prohibited. Sandals and flip-flops are prohibited on the Project site. The use of radios, tape players, CD players, boom boxes, sound producing devices and the like are prohibited on the Project site. The Contractor shall not be permitted to use restrooms or other sanitary facilities within the Owner's existing buildings or on-site facilities.

D. Except as otherwise required for the safety or protection of persons or the Work or property at the Site or adjacent thereto, and except as otherwise stated in the Contract Documents, all Work at the Site will be performed during regular working hours, Monday through Friday. Contractor will not perform Work on a Saturday, Sunday, or any legal holiday. Contractor may perform Work outside regular working hours or on Saturdays, Sundays, or legal holidays only with Owner's written consent, which will not be unreasonably withheld.

Copyright© 2018 National Society of Professional Engineers, American Council of Engineering Companies, and American Society of Civil Engineers. All rights reserved.

7.04 *Services, Materials, and Equipment*

A. Unless otherwise specified in the Contract Documents, Contractor shall provide and assume full responsibility for all services, materials, equipment, labor, transportation, construction equipment and machinery, tools, appliances, fuel, power, light, heat, telephone, water, sanitary facilities, temporary facilities, and all other facilities and incidentals necessary for the performance, testing, start up, and completion of the Work, whether or not such items are specifically called for in the Contract Documents.

B. All materials and equipment incorporated into the Work must be new and of good quality, except as otherwise provided in the Contract Documents. All special warranties and guarantees required by the Specifications will expressly run to the benefit of Owner. If required by Engineer, Contractor shall furnish satisfactory evidence (including reports of required tests) as to the source, kind, and quality of materials and equipment.

C. All materials and equipment must be stored, applied, installed, connected, erected, protected, used, cleaned, and conditioned in accordance with instructions of the applicable Supplier, except as otherwise may be provided in the Contract Documents.

7.05 *"Or Equals"*

A. *Contractor's Request; Governing Criteria*: Whenever an item of equipment or material is specified or described in the Contract Documents by using the names of one or more proprietary items or specific Suppliers, the Contract Price has been based upon Contractor furnishing such item as specified. The specification or description of such an item is intended to establish the type, function, appearance, and quality required. Unless the specification or description contains or is followed by words reading that no like, equivalent, or "or equal" item is permitted, Contractor may request that Engineer authorize the use of other items of equipment or material, or items from other proposed Suppliers, under the circumstances described below.

1. If Engineer in its sole discretion determines that an item of equipment or material proposed by Contractor is functionally equal to that named and sufficiently similar so that no change in related Work will be required, Engineer will deem it an "or equal" item. For the purposes of this paragraph, a proposed item of equipment or material will be considered functionally equal to an item so named if:

    a. in the exercise of reasonable judgment Engineer determines that the proposed item:

        1) is at least equal in materials of construction, quality, durability, appearance, strength, and design characteristics;

        2) will reliably perform at least equally well the function and achieve the results imposed by the design concept of the completed Project as a functioning whole;

        3) has a proven record of performance and availability of responsive service; and

        4) is not objectionable to Owner.

    b. Contractor certifies that, if the proposed item is approved and incorporated into the Work:

        1) there will be no increase in cost to the Owner or increase in Contract Times; and

Copyright© 2018 National Society of Professional Engineers, American Council of Engineering Companies, and American Society of Civil Engineers. All rights reserved.

2) the item will conform substantially to the detailed requirements of the item named in the Contract Documents.

B. *Contractor's Expense*: Contractor shall provide all data in support of any proposed "or equal" item at Contractor's expense.

C. *Engineer's Evaluation and Determination*: Engineer will be allowed a reasonable time to evaluate each "or-equal" request. Engineer may require Contractor to furnish additional data about the proposed "or-equal" item. Engineer will be the sole judge of acceptability. No "or-equal" item will be ordered, furnished, installed, or utilized until Engineer's review is complete and Engineer determines that the proposed item is an "or-equal," which will be evidenced by an approved Shop Drawing or other written communication. Engineer will advise Contractor in writing of any negative determination.

D. *Effect of Engineer's Determination*: Neither approval nor denial of an "or-equal" request will result in any change in Contract Price. The Engineer's denial of an "or-equal" request will be final and binding, and may not be reversed through an appeal under any provision of the Contract.

E. *Treatment as a Substitution Request*: If Engineer determines that an item of equipment or material proposed by Contractor does not qualify as an "or-equal" item, Contractor may request that Engineer consider the item a proposed substitute pursuant to Paragraph 7.06.

7.06 *Substitutes*

A. *Contractor's Request; Governing Criteria*: Unless the specification or description of an item of equipment or material required to be furnished under the Contract Documents contains or is followed by words reading that no substitution is permitted, Contractor may request that Engineer authorize the use of other items of equipment or material under the circumstances described below. To the extent possible such requests must be made before commencement of related construction at the Site.

1. Contractor shall submit sufficient information as provided below to allow Engineer to determine if the item of material or equipment proposed is functionally equivalent to that named and an acceptable substitute therefor. Engineer will not accept requests for review of proposed substitute items of equipment or material from anyone other than Contractor.

2. The requirements for review by Engineer will be as set forth in Paragraph 7.06.B, as supplemented by the Specifications, and as Engineer may decide is appropriate under the circumstances.

3. Contractor shall make written application to Engineer for review of a proposed substitute item of equipment or material that Contractor seeks to furnish or use. The application:

a. will certify that the proposed substitute item will:

1) perform adequately the functions and achieve the results called for by the general design;

2) be similar in substance to the item specified; and

3) be suited to the same use as the item specified.

Copyright© 2018 National Society of Professional Engineers, American Council of Engineering Companies, and American Society of Civil Engineers. All rights reserved.

b. will state:

1) the extent, if any, to which the use of the proposed substitute item will necessitate a change in Contract Times;

2) whether use of the proposed substitute item in the Work will require a change in any of the Contract Documents (or in the provisions of any other direct contract with Owner for other work on the Project) to adapt the design to the proposed substitute item; and

3) whether incorporation or use of the proposed substitute item in connection with the Work is subject to payment of any license fee or royalty.

c. will identify:

1) all variations of the proposed substitute item from the item specified; and

2) available engineering, sales, maintenance, repair, and replacement services.

d. will contain an itemized estimate of all costs or credits that will result directly or indirectly from use of such substitute item, including but not limited to changes in Contract Price, shared savings, costs of redesign, and claims of other contractors affected by any resulting change.

B. *Engineer's Evaluation and Determination*: Engineer will be allowed a reasonable time to evaluate each substitute request, and to obtain comments and direction from Owner. Engineer may require Contractor to furnish additional data about the proposed substitute item. Engineer will be the sole judge of acceptability. No substitute will be ordered, furnished, installed, or utilized until Engineer's review is complete and Engineer determines that the proposed item is an acceptable substitute. Engineer's determination will be evidenced by a Field Order or a proposed Change Order accounting for the substitution itself and all related impacts, including changes in Contract Price or Contract Times. Engineer will advise Contractor in writing of any negative determination.

C. *Special Guarantee*: Owner may require Contractor to furnish at Contractor's expense a special performance guarantee or other surety with respect to any substitute.

D. *Reimbursement of Engineer's Cost*: Engineer will record Engineer's costs in evaluating a substitute proposed or submitted by Contractor. Whether or not Engineer approves a substitute so proposed or submitted by Contractor, Contractor shall reimburse Owner for the reasonable charges of Engineer for evaluating each such proposed substitute. Contractor shall also reimburse Owner for the reasonable charges of Engineer for making changes in the Contract Documents (or in the provisions of any other direct contract with Owner) resulting from the acceptance of each proposed substitute.

E. *Contractor's Expense*: Contractor shall provide all data in support of any proposed substitute at Contractor's expense.

F. *Effect of Engineer's Determination*: If Engineer approves the substitution request, Contractor shall execute the proposed Change Order and proceed with the substitution. The Engineer's denial of a substitution request will be final and binding, and may not be reversed through an appeal under any provision of the Contract. Contractor may challenge the scope of

Copyright© 2018 National Society of Professional Engineers, American Council of Engineering Companies, and American Society of Civil Engineers. All rights reserved.

reimbursement costs imposed under Paragraph 7.06.D, by timely submittal of a Change Proposal.

7.07 *Concerning Subcontractors and Suppliers*

A. Contractor may retain Subcontractors and Suppliers for the performance of parts of the Work. Such Subcontractors and Suppliers must be acceptable to Owner. The Contractor's retention of a Subcontractor or Supplier for the performance of parts of the Work will not relieve Contractor's obligation to Owner to perform and complete the Work in accordance with the Contract Documents.

B. Contractor shall retain specific Subcontractors and Suppliers for the performance of designated parts of the Work if required by the Contract to do so.

C. Subsequent to the submittal of Contractor's Bid or final negotiation of the terms of the Contract, Owner may not require Contractor to retain any Subcontractor or Supplier to furnish or perform any of the Work against which Contractor has reasonable objection.

D. Prior to entry into any binding subcontract or purchase order, Contractor shall submit to Owner the identity of the proposed Subcontractor or Supplier (unless Owner has already deemed such proposed Subcontractor or Supplier acceptable during the bidding process or otherwise). Such proposed Subcontractor or Supplier shall be deemed acceptable to Owner unless Owner raises a substantive, reasonable objection within 5 days.

E. Owner may require the replacement of any Subcontractor or Supplier. Owner also may require Contractor to retain specific replacements; provided, however, that Owner may not require a replacement to which Contractor has a reasonable objection. If Contractor has submitted the identity of certain Subcontractors or Suppliers for acceptance by Owner, and Owner has accepted it (either in writing or by failing to make written objection thereto), then Owner may subsequently revoke the acceptance of any such Subcontractor or Supplier so identified solely on the basis of substantive, reasonable objection after due investigation. Contractor shall submit an acceptable replacement for the rejected Subcontractor or Supplier.

F. If Owner requires the replacement of any Subcontractor or Supplier retained by Contractor to perform any part of the Work, then Contractor shall be entitled to an adjustment in Contract Price or Contract Times, with respect to the replacement; and Contractor shall initiate a Change Proposal for such adjustment within 30 days of Owner's requirement of replacement.

G. No acceptance by Owner of any such Subcontractor or Supplier, whether initially or as a replacement, will constitute a waiver of the right of Owner to the completion of the Work in accordance with the Contract Documents.

H. On a monthly basis, Contractor shall submit to Engineer a complete list of all Subcontractors and Suppliers having a direct contract with Contractor, and of all other Subcontractors and Suppliers known to Contractor at the time of submittal.

I. Contractor shall be solely responsible for scheduling and coordinating the work of Subcontractors and Suppliers.

Copyright© 2018 National Society of Professional Engineers, American Council of Engineering Companies, and American Society of Civil Engineers. All rights reserved.

J. The divisions and sections of the Specifications and the identifications of any Drawings do not control Contractor in dividing the Work among Subcontractors or Suppliers, or in delineating the Work to be performed by any specific trade.

K. All Work performed for Contractor by a Subcontractor or Supplier must be pursuant to an appropriate contractual agreement that specifically binds the Subcontractor or Supplier to the applicable terms and conditions of the Contract for the benefit of Owner and Engineer.

L. Owner may furnish to any Subcontractor or Supplier, to the extent practicable, information about amounts paid to Contractor for Work performed for Contractor by the Subcontractor or Supplier.

M. Contractor shall restrict all Subcontractors and Suppliers from communicating with Engineer or Owner, except through Contractor or in case of an emergency, or as otherwise expressly allowed in this Contract.

7.08 *Patent Fees and Royalties*

A. Contractor shall pay all license fees and royalties and assume all costs incident to the use in the performance of the Work or the incorporation in the Work of any invention, design, process, product, or device which is the subject of patent rights or copyrights held by others. If an invention, design, process, product, or device is specified in the Contract Documents for use in the performance of the Work and if, to the actual knowledge of Owner or Engineer, its use is subject to patent rights or copyrights calling for the payment of any license fee or royalty to others, the existence of such rights will be disclosed in the Contract Documents.

B. Deleted in its entirety.

C. Deleted in its entirety.

7.09 *Permits*

A. Unless otherwise provided in the Contract Documents, Contractor shall obtain and pay for all construction permits, licenses, and certificates of occupancy. Owner shall assist Contractor, when necessary, in obtaining such permits and licenses. Contractor shall pay all governmental charges and inspection fees necessary for the prosecution of the Work which are applicable at the time of the submission of Contractor's Bid (or when Contractor became bound under a negotiated contract). Owner shall pay all charges of utility owners for connections for providing permanent service to the Work.

7.10 *Taxes*

A. Contractor shall pay all sales, consumer, use, and other similar taxes required to be paid by Contractor in accordance with the Laws and Regulations of the place of the Project which are applicable during the performance of the Work.

7.11 *Laws and Regulations*

A. Contractor shall give all notices required by and shall comply with all Laws and Regulations applicable to the performance of the Work. Neither Owner nor Engineer shall be responsible for monitoring Contractor's compliance with any Laws or Regulations.

Copyright© 2018 National Society of Professional Engineers, American Council of Engineering Companies, and American Society of Civil Engineers. All rights reserved.

B. If Contractor performs any Work or takes any other action knowing or having reason to know that it is contrary to Laws or Regulations, Contractor shall bear all resulting costs and losses, and shall indemnify and hold harmless Owner and Engineer, and the officers, directors, members, partners, employees, agents, consultants, and subcontractors of each and any of them, from and against all claims, costs, losses, and damages (including but not limited to all fees and charges of engineers, architects, attorneys, and other professionals and all court or arbitration or other dispute resolution costs) arising out of or relating to such Work or other action. It is not Contractor's responsibility to make certain that the Work described in the Contract Documents is in accordance with Laws and Regulations, but this does not relieve Contractor of its obligations under Paragraph 3.03.

C. Owner or Contractor may give written notice to the other party of any changes after the submission of Contractor's Bid (or after the date when Contractor became bound under a negotiated contract) in Laws or Regulations having an effect on the cost or time of performance of the Work, including but not limited to changes in Laws or Regulations having an effect on procuring permits and on sales, use, value-added, consumption, and other similar taxes. If Owner and Contractor are unable to agree on entitlement to or on the amount or extent, if any, of any adjustment in Contract Price or Contract Times resulting from such changes, then within 30 days of such written notice Contractor may submit a Change Proposal, or Owner may initiate a Claim.

7.12 *Record Documents*

A. Contractor shall maintain in a safe place at the Site one printed record copy of all Drawings, Specifications, Addenda, Change Orders, Work Change Directives, Field Orders, written interpretations and clarifications, and approved Shop Drawings. Contractor shall keep such record documents in good order and annotate them to show changes made during construction. These record documents, together with all approved Samples, will be available to Engineer for reference. Upon completion of the Work, Contractor shall deliver these record documents to Engineer.

7.13 *Safety and Protection*

A. Contractor shall be solely responsible for initiating, maintaining, and supervising all safety precautions and programs in connection with the Work. Such responsibility does not relieve Subcontractors of their responsibility for the safety of persons or property in the performance of their work, nor for compliance with applicable safety Laws and Regulations.

B. Contractor shall designate a qualified and experienced safety representative whose duties and responsibilities are the prevention of Work-related accidents and the maintenance and supervision of safety precautions and programs.

C. Contractor shall take all necessary precautions for the safety of, and shall provide the necessary protection to prevent damage, injury, or loss to:

1. all persons on the Site or who may be affected by the Work;

2. all the Work and materials and equipment to be incorporated therein, whether in storage on or off the Site; and

Copyright© 2018 National Society of Professional Engineers, American Council of Engineering Companies, and American Society of Civil Engineers. All rights reserved.

3. other property at the Site or adjacent thereto, including trees, shrubs, lawns, walks, pavements, roadways, structures, other work in progress, utilities, and Underground Facilities not designated for removal, relocation, or replacement in the course of construction.

D. All damage, injury, or loss to any property referred to in Paragraph 7.13.C.2 or 7.13.C.3 caused, directly or indirectly, in whole or in part, by Contractor, any Subcontractor, Supplier, or any other individual or entity directly or indirectly employed by any of them to perform any of the Work, or anyone for whose acts any of them may be liable, shall be remedied by Contractor at its expense (except damage or loss attributable to the fault of Drawings or Specifications or to the acts or omissions of Owner or Engineer or anyone employed by any of them, or anyone for whose acts any of them may be liable, and not attributable, directly or indirectly, in whole or in part, to the fault or negligence of Contractor or any Subcontractor, Supplier, or other individual or entity directly or indirectly employed by any of them).

E. Contractor shall comply with all applicable Laws and Regulations relating to the safety of persons or property, or to the protection of persons or property from damage, injury, or loss; and shall erect and maintain all necessary safeguards for such safety and protection.

F. Contractor shall notify Owner; the owners of adjacent property; the owners of Underground Facilities and other utilities (if the identity of such owners is known to Contractor); and other contractors and utility owners performing work at or adjacent to the Site, in writing, when Contractor knows that prosecution of the Work may affect them, and shall cooperate with them in the protection, removal, relocation, and replacement of their property or work in progress.

G. Contractor shall comply with the applicable requirements of Owner's safety programs, if any. Any Owner's safety programs that are applicable to the Work are identified or included in the Supplementary Conditions or Specifications.

H. Contractor shall inform Owner and Engineer of the specific requirements of Contractor's safety program with which Owner's and Engineer's employees and representatives must comply while at the Site.

I. Contractor's duties and responsibilities for safety and protection will continue until all the Work is completed, Engineer has issued a written notice to Owner and Contractor in accordance with Paragraph 15.06.C that the Work is acceptable, and Contractor has left the Site (except as otherwise expressly provided in connection with Substantial Completion).

J. Contractor's duties and responsibilities for safety and protection will resume whenever Contractor or any Subcontractor or Supplier returns to the Site to fulfill warranty or correction obligations, or to conduct other tasks arising from the Contract Documents.

7.14 *Hazard Communication Programs*

A. Contractor shall be responsible for coordinating any exchange of safety data sheets (formerly known as material safety data sheets) or other hazard communication information required to be made available to or exchanged between or among employers at the Site in accordance with Laws or Regulations.

Copyright© 2018 National Society of Professional Engineers, American Council of Engineering Companies, and American Society of Civil Engineers. All rights reserved.

7.15 *Emergencies*

A. In emergencies affecting the safety or protection of persons or the Work or property at the Site or adjacent thereto, Contractor is obligated to act to prevent damage, injury, or loss. Contractor shall give Engineer prompt written notice if Contractor believes that any significant changes in the Work or variations from the Contract Documents have been caused by an emergency, or are required as a result of Contractor's response to an emergency. If Engineer determines that a change in the Contract Documents is required because of an emergency or Contractor's response, a Work Change Directive or Change Order will be issued.

7.16 *Submittals*

A. *Shop Drawing and Sample Requirements*

1. Before submitting a Shop Drawing or Sample, Contractor shall:

a. review and coordinate the Shop Drawing or Sample with other Shop Drawings and Samples and with the requirements of the Work and the Contract Documents;

b. determine and verify:

1) all field measurements, quantities, dimensions, specified performance and design criteria, installation requirements, materials, catalog numbers, and similar information with respect to the Submittal;

2) the suitability of all materials and equipment offered with respect to the indicated application, fabrication, shipping, handling, storage, assembly, and installation pertaining to the performance of the Work; and

3) all information relative to Contractor's responsibilities for means, methods, techniques, sequences, and procedures of construction, and safety precautions and programs incident thereto;

c. confirm that the Submittal is complete with respect to all related data included in the Submittal.

2. Each Shop Drawing or Sample must bear a stamp or specific written certification that Contractor has satisfied Contractor's obligations under the Contract Documents with respect to Contractor's review of that Submittal, and that Contractor approves the Submittal.

3. With each Shop Drawing or Sample, Contractor shall give Engineer specific written notice of any variations that the Submittal may have from the requirements of the Contract Documents. This notice must be set forth in a written communication separate from the Submittal; and, in addition, in the case of a Shop Drawing by a specific notation made on the Shop Drawing itself.

B. *Submittal Procedures for Shop Drawings and Samples*: Contractor shall label and submit Shop Drawings and Samples to Engineer for review and approval in accordance with the accepted Schedule of Submittals.

1. *Shop Drawings*

a. Contractor shall submit the number of copies required in the Specifications.

Copyright© 2018 National Society of Professional Engineers, American Council of Engineering Companies, and American Society of Civil Engineers. All rights reserved.

b. Data shown on the Shop Drawings must be complete with respect to quantities, dimensions, specified performance and design criteria, materials, and similar data to show Engineer the services, materials, and equipment Contractor proposes to provide, and to enable Engineer to review the information for the limited purposes required by Paragraph 7.16.C.

2. *Samples*

a. Contractor shall submit the number of Samples required in the Specifications.

b. Contractor shall clearly identify each Sample as to material, Supplier, pertinent data such as catalog numbers, the use for which intended and other data as Engineer may require to enable Engineer to review the Submittal for the limited purposes required by Paragraph 7.16.C.

3. Where a Shop Drawing or Sample is required by the Contract Documents or the Schedule of Submittals, any related Work performed prior to Engineer's review and approval of the pertinent submittal will be at the sole expense and responsibility of Contractor.

C. *Engineer's Review of Shop Drawings and Samples*

1. Engineer will provide timely review of Shop Drawings and Samples in accordance with the accepted Schedule of Submittals. Engineer's review and approval will be only to determine if the items covered by the Submittals will, after installation or incorporation in the Work, comply with the requirements of the Contract Documents, and be compatible with the design concept of the completed Project as a functioning whole as indicated by the Contract Documents.

2. Engineer's review and approval will not extend to means, methods, techniques, sequences, or procedures of construction, or to safety precautions or programs incident thereto.

3. Engineer's review and approval of a separate item as such will not indicate approval of the assembly in which the item functions.

4. Engineer's review and approval of a Shop Drawing or Sample will not relieve Contractor from responsibility for any variation from the requirements of the Contract Documents unless Contractor has complied with the requirements of Paragraph 7.16.A.3 and Engineer has given written approval of each such variation by specific written notation thereof incorporated in or accompanying the Shop Drawing or Sample. Engineer will document any such approved variation from the requirements of the Contract Documents in a Field Order or other appropriate Contract modification.

5. Engineer's review and approval of a Shop Drawing or Sample will not relieve Contractor from responsibility for complying with the requirements of Paragraphs 7.16.A and B.

6. Engineer's review and approval of a Shop Drawing or Sample, or of a variation from the requirements of the Contract Documents, will not, under any circumstances, change the Contract Times or Contract Price, unless such changes are included in a Change Order.

7. Neither Engineer's receipt, review, acceptance, or approval of a Shop Drawing or Sample will result in such item becoming a Contract Document.

Copyright© 2018 National Society of Professional Engineers, American Council of Engineering Companies, and American Society of Civil Engineers. All rights reserved.

8. Contractor shall perform the Work in compliance with the requirements and commitments set forth in approved Shop Drawings and Samples, subject to the provisions of Paragraph 7.16.C.4.

D. *Resubmittal Procedures for Shop Drawings and Samples*

1. Contractor shall make corrections required by Engineer and shall return the required number of corrected copies of Shop Drawings and submit, as required, new Samples for review and approval. Contractor shall direct specific attention in writing to revisions other than the corrections called for by Engineer on previous Submittals.

2. Contractor shall furnish required Shop Drawing and Sample submittals with sufficient information and accuracy to obtain required approval of an item with no more than two resubmittals. Engineer will record Engineer's time for reviewing a third or subsequent resubmittal of a Shop Drawing or Sample, and Contractor shall be responsible for Engineer's charges to Owner for such time. Owner may impose a set-off against payments due Contractor to secure reimbursement for such charges.

3. If Contractor requests a change of a previously approved Shop Drawing or Sample, Contractor shall be responsible for Engineer's charges to Owner for its review time, and Owner may impose a set-off against payments due Contractor to secure reimbursement for such charges, unless the need for such change is beyond the control of Contractor.

E. *Submittals Other than Shop Drawings, Samples, and Owner-Delegated Designs*

1. The following provisions apply to all Submittals other than Shop Drawings, Samples, and Owner-delegated designs:

a. Contractor shall submit all such Submittals to the Engineer in accordance with the Schedule of Submittals and pursuant to the applicable terms of the Contract Documents.

b. Engineer will provide timely review of all such Submittals in accordance with the Schedule of Submittals and return such Submittals with a notation of either Accepted or Not Accepted. Any such Submittal that is not returned within the time established in the Schedule of Submittals will be deemed accepted.

c. Engineer's review will be only to determine if the Submittal is acceptable under the requirements of the Contract Documents as to general form and content of the Submittal.

d. If any such Submittal is not accepted, Contractor shall confer with Engineer regarding the reason for the non-acceptance, and resubmit an acceptable document.

2. Procedures for the submittal and acceptance of the Progress Schedule, the Schedule of Submittals, and the Schedule of Values are set forth in Paragraphs 2.03. 2.04, and 2.05.

F. Owner-delegated Designs: Submittals pursuant to Owner-delegated designs are governed by the provisions of Paragraph 7.19.

Copyright© 2018 National Society of Professional Engineers, American Council of Engineering Companies, and American Society of Civil Engineers. All rights reserved.

7.17 *Contractor's General Warranty and Guarantee*

A. Contractor warrants and guarantees to Owner that all Work will be in accordance with the Contract Documents and will not be defective. Engineer is entitled to rely on Contractor's warranty and guarantee.

B. Owner's rights under this warranty and guarantee are in addition to, and are not limited by, Owner's rights under the correction period provisions of Paragraph 15.08. The time in which Owner may enforce its warranty and guarantee rights under this Paragraph 7.17 is limited only by applicable Laws and Regulations restricting actions to enforce such rights; provided, however, that after the end of the correction period under Paragraph 15.08:

1. Owner shall give Contractor written notice of any defective Work within 60 days of the discovery that such Work is defective; and

2. Such notice will be deemed the start of an event giving rise to a Claim under Paragraph 12.01.B, such that any related Claim must be brought within 30 days of the notice.

C. Contractor's warranty and guarantee hereunder excludes defects or damage caused by:

1. abuse, or improper modification, maintenance, or operation, by persons other than Contractor, Subcontractors, Suppliers, or any other individual or entity for whom Contractor is responsible; or

2. normal wear and tear under normal usage.

D. Contractor's obligation to perform and complete the Work in accordance with the Contract Documents is absolute. None of the following will constitute an acceptance of Work that is not in accordance with the Contract Documents, a release of Contractor's obligation to perform the Work in accordance with the Contract Documents, or a release of Owner's warranty and guarantee rights under this Paragraph 7.17:

1. Observations by Engineer;

2. Recommendation by Engineer or payment by Owner of any progress or final payment;

3. The issuance of a certificate of Substantial Completion by Engineer or any payment related thereto by Owner;

4. Use or occupancy of the Work or any part thereof by Owner;

5. Any review and approval of a Shop Drawing or Sample submittal;

6. The issuance of a notice of acceptability by Engineer;

7. The end of the correction period established in Paragraph 15.08;

8. Any inspection, test, or approval by others; or

9. Any correction of defective Work by Owner.

E. If the Contract requires the Contractor to accept the assignment of a contract entered into by Owner, then the specific warranties, guarantees, and correction obligations contained in the assigned contract will govern with respect to Contractor's performance obligations to Owner for the Work described in the assigned contract.

Copyright© 2018 National Society of Professional Engineers, American Council of Engineering Companies, and American Society of Civil Engineers. All rights reserved.

7.18 *Indemnification*

A.

To the extent provided by law, Contractor shall indemnify, defend, and hold harmless the Owner and the State of Florida, Department of Transportation, including the Department's officers, agents, and employees, against any actions, claims, or damages arising out of, relating to, or resulting from negligent or wrongful act(s) of Contractor, or any of its officers, agents, or employees, acting within the scope of their office or employment, in connection with the rights granted to or exercised by Contractor.

The foregoing indemnification shall not constitute a waiver of the Department's or Owner's sovereign immunity beyond the limits set forth in Florida Statutes, Section 768.28. Nor shall the same be construed to constitute agreement by Contractor to indemnify City for the negligent acts or omissions of Owner, its officers, agents, or employees, or third parties. Nor shall the same be construed to constitute agreement by Contractor to indemnify the Department for the negligent acts or omissions of the Department, its officers, agents, or employees, or third parties. This indemnification shall survive the termination of this Agreement.

B. The Contractor acknowledges the limit of dollar amount of Contractor's indemnity obligations required by the Contract specifically for those claims caused in whole or in part by the Owner or Engineer shall be $1,000,000 or the Contract Sum of the Project, whichever is more. The parties agree that the indemnity provided herein bears a reasonable commercial relationship to the Contract and is incorporated by this reference into the Project specifications and bid documents. if any.

C. Notwithstanding the above and without monetary limitation, the Contractor hereby indemnifies and holds harmless the Owner, their officers and employees, from liabilities, damages, losses and costs, including, but not limited to, reasonable attorney's fees, to the extent caused by negligence, recklessness, or intentional wrongful misconduct of the Contractor and persons employed or utilized by the Contractor in the performance of the Contract.

D. Contractor agrees and understands that its obligation to indemnify, hold harmless, and defend as set forth in Paragraphs 7.18.A and B. above includes without limitation, claims, losses, etc., for personal injury, death, property damage, Hazardous Environmental Conditions, infringement of patent rights or copyrights incidental to the use or incorporation in the performance of the Work, etc., to the extent caused by the negligence, recklessness, or intentional misconduct of Contractor and the persons or entities employed or utilized by Contractor in the performance of the Contract.

Copyright© 2018 National Society of Professional Engineers, American Council of Engineering Companies, and American Society of Civil Engineers. All rights reserved.

7.19 *Delegation of Professional Design Services*

A. Owner may require Contractor to provide professional design services for a portion of the Work by express delegation in the Contract Documents. Such delegation will specify the performance and design criteria that such services must satisfy, and the Submittals that Contractor must furnish to Engineer with respect to the Owner-delegated design.

B. Contractor shall cause such Owner-delegated professional design services to be provided pursuant to the professional standard of care by a properly licensed design professional, whose signature and seal must appear on all drawings, calculations, specifications, certifications, and Submittals prepared by such design professional. Such design professional must issue all certifications of design required by Laws and Regulations.

C. If a Shop Drawing or other Submittal related to the Owner-delegated design is prepared by Contractor, a Subcontractor, or others for submittal to Engineer, then such Shop Drawing or other Submittal must bear the written approval of Contractor's design professional when submitted by Contractor to Engineer.

D. Owner and Engineer shall be entitled to rely upon the adequacy, accuracy, and completeness of the services, certifications, and approvals performed or provided by the design professionals retained or employed by Contractor under an Owner-delegated design, subject to the professional standard of care and the performance and design criteria stated in the Contract Documents.

E. Pursuant to this Paragraph 7.19, Engineer's review, approval, and other determinations regarding design drawings, calculations, specifications, certifications, and other Submittals furnished by Contractor pursuant to an Owner-delegated design will be only for the following limited purposes:

1. Checking for conformance with the requirements of this Paragraph 7.19;

2. Confirming that Contractor (through its design professionals) has used the performance and design criteria specified in the Contract Documents; and

3. Establishing that the design furnished by Contractor is consistent with the design concept expressed in the Contract Documents.

F. Contractor shall not be responsible for the adequacy of performance or design criteria specified by Owner or Engineer.

G. Contractor is not required to provide professional services in violation of applicable Laws and Regulations.

ARTICLE 8—OTHER WORK AT THE SITE

8.01 *Other Work*

A. In addition to and apart from the Work under the Contract Documents, the Owner may perform other work at or adjacent to the Site. Such other work may be performed by Owner's employees, or through contracts between the Owner and third parties. Owner may also arrange to have third-party utility owners perform work on their utilities and facilities at or adjacent to the Site.

Copyright© 2018 National Society of Professional Engineers, American Council of Engineering Companies, and American Society of Civil Engineers. All rights reserved.

B. If Owner performs other work at or adjacent to the Site with Owner's employees, or through contracts for such other work, then Owner shall give Contractor written notice thereof prior to starting any such other work. If Owner has advance information regarding the start of any third-party utility work that Owner has arranged to take place at or adjacent to the Site, Owner shall provide such information to Contractor.

C. Contractor shall afford proper and safe access to the Site to each contractor that performs such other work, each utility owner performing other work, and Owner, if Owner is performing other work with Owner's employees, and provide a reasonable opportunity for the introduction and storage of materials and equipment and the execution of such other work.

D. Contractor shall do all cutting, fitting, and patching of the Work that may be required to properly connect or otherwise make its several parts come together and properly integrate with such other work. Contractor shall not endanger any work of others by cutting, excavating, or otherwise altering such work; provided, however, that Contractor may cut or alter others' work with the written consent of Engineer and the others whose work will be affected.

E. If the proper execution or results of any part of Contractor's Work depends upon work performed by others, Contractor shall inspect such other work and promptly report to Engineer in writing any delays, defects, or deficiencies in such other work that render it unavailable or unsuitable for the proper execution and results of Contractor's Work. Contractor's failure to so report will constitute an acceptance of such other work as fit and proper for integration with Contractor's Work except for latent defects and deficiencies in such other work.

F. The provisions of this article are not applicable to work that is performed by third-party utilities or other third-party entities without a contract with Owner, or that is performed without having been arranged by Owner. If such work occurs, then any related delay, disruption, or interference incurred by Contractor is governed by the provisions of Paragraph 4.05.C.3.

8.02 *Coordination*

A. If Owner intends to contract with others for the performance of other work at or adjacent to the Site, to perform other work at or adjacent to the Site with Owner's employees, or to arrange to have utility owners perform work at or adjacent to the Site, the following will be set forth in the Supplementary Conditions or provided to Contractor prior to the start of any such other work:

1. The identity of the individual or entity that will have authority and responsibility for coordination of the activities among the various contractors;

2. An itemization of the specific matters to be covered by such authority and responsibility; and

3. The extent of such authority and responsibilities.

B. Unless otherwise provided in the Supplementary Conditions, Owner shall have sole authority and responsibility for such coordination.

Copyright© 2018 National Society of Professional Engineers, American Council of Engineering Companies, and American Society of Civil Engineers. All rights reserved.

8.03 *Legal Relationships*

A. If, in the course of performing other work for Owner at or adjacent to the Site, the Owner's employees, any other contractor working for Owner, or any utility owner that Owner has arranged to perform work, causes damage to the Work or to the property of Contractor or its Subcontractors, or delays, disrupts, interferes with, or increases the scope or cost of the performance of the Work, through actions or inaction, then Contractor shall be entitled to an equitable adjustment in the Contract Price or the Contract Times. Contractor must submit any Change Proposal seeking an equitable adjustment in the Contract Price or the Contract Times under this paragraph within 30 days of the damaging, delaying, disrupting, or interfering event. The entitlement to, and extent of, any such equitable adjustment will take into account information (if any) regarding such other work that was provided to Contractor in the Contract Documents prior to the submittal of the Bid or the final negotiation of the terms of the Contract, and any remedies available to Contractor under Laws or Regulations concerning utility action or inaction. When applicable, any such equitable adjustment in Contract Price will be conditioned on Contractor assigning to Owner all Contractor's rights against such other contractor or utility owner with respect to the damage, delay, disruption, or interference that is the subject of the adjustment. Contractor's entitlement to an adjustment of the Contract Times or Contract Price is subject to the provisions of Paragraphs 4.05.D and 4.05.E.

B. Contractor shall take reasonable and customary measures to avoid damaging, delaying, disrupting, or interfering with the work of Owner, any other contractor, or any utility owner performing other work at or adjacent to the Site.

   1. If Contractor fails to take such measures and as a result damages, delays, disrupts, or interferes with the work of any such other contractor or utility owner, then Owner may impose a set-off against payments due Contractor, and assign to such other contractor or utility owner the Owner's contractual rights against Contractor with respect to the breach of the obligations set forth in this Paragraph 8.03.B.

   2. When Owner is performing other work at or adjacent to the Site with Owner's employees, Contractor shall be liable to Owner for damage to such other work, and for the reasonable direct delay, disruption, and interference costs incurred by Owner as a result of Contractor's failure to take reasonable and customary measures with respect to Owner's other work. In response to such damage, delay, disruption, or interference, Owner may impose a set-off against payments due Contractor.

C. If Contractor damages, delays, disrupts, or interferes with the work of any other contractor, or any utility owner performing other work at or adjacent to the Site, through Contractor's failure to take reasonable and customary measures to avoid such impacts, or if any claim arising out of Contractor's actions, inactions, or negligence in performance of the Work at or adjacent to the Site is made by any such other contractor or utility owner against Contractor, Owner, or Engineer, then Contractor shall (1) promptly attempt to settle the claim as to all parties through negotiations with such other contractor or utility owner, or otherwise resolve the claim by arbitration or other dispute resolution proceeding or at law, and (2) indemnify and hold harmless Owner and Engineer, and the officers, directors, members, partners, employees, agents, consultants and subcontractors of each and any of them from and against any such claims, and against all costs, losses, and damages (including but not limited to all

Copyright© 2018 National Society of Professional Engineers, American Council of Engineering Companies, and American Society of Civil Engineers. All rights reserved.

fees and charges of engineers, architects, attorneys, and other professionals and all court or arbitration or other dispute resolution costs) arising out of or relating to such damage, delay, disruption, or interference.

ARTICLE 9—OWNER'S RESPONSIBILITIES

9.01 *Communications to Contractor*

A. Except as otherwise provided in these General Conditions, Owner shall issue all communications to Contractor through Engineer.

9.02 *Replacement of Engineer*

A. Owner may at its discretion appoint an engineer to replace Engineer, provided Contractor makes no reasonable objection to the replacement engineer. The replacement engineer's status under the Contract Documents will be that of the former Engineer.

9.03 *Furnish Data*

A. Owner shall promptly furnish the data required of Owner under the Contract Documents.

9.04 *Pay When Due*

A. Owner shall make payments to Contractor when they are due as provided in the Agreement.

9.05 *Lands and Easements; Reports, Tests, and Drawings*

A. Owner's duties with respect to providing lands and easements are set forth in Paragraph 5.01.

B. Owner's duties with respect to providing engineering surveys to establish reference points are set forth in Paragraph 4.03.

C. Article 5 refers to Owner's identifying and making available to Contractor copies of reports of explorations and tests of conditions at the Site, and drawings of physical conditions relating to existing surface or subsurface structures at the Site.

9.06 *Insurance*

A. Owner's responsibilities, if any, with respect to purchasing and maintaining liability and property insurance are set forth in Article 6.

9.07 *Change Orders*

A. Owner's responsibilities with respect to Change Orders are set forth in Article 11.

9.08 *Inspections, Tests, and Approvals*

A. Owner's responsibility with respect to certain inspections, tests, and approvals is set forth in Paragraph 14.02.B.

9.09 *Limitations on Owner's Responsibilities*

A. The Owner shall not supervise, direct, or have control or authority over, nor be responsible for, Contractor's means, methods, techniques, sequences, or procedures of construction, or the safety precautions and programs incident thereto, or for any failure of Contractor to comply with Laws and Regulations applicable to the performance of the Work. Owner will not

Copyright© 2018 National Society of Professional Engineers, American Council of Engineering Companies, and American Society of Civil Engineers. All rights reserved.

be responsible for Contractor's failure to perform the Work in accordance with the Contract Documents.

9.10 *Undisclosed Hazardous Environmental Condition*

A. Owner's responsibility in respect to an undisclosed Hazardous Environmental Condition is set forth in Paragraph 5.06.

9.11 *Deleted in its entirety.*

A. Deleted in its entirety. N/A

9.12 *Safety Programs*

A. While at the Site, Owner's employees and representatives shall comply with the specific applicable requirements of Contractor's safety programs of which Owner has been informed.

B. Owner shall furnish copies of any applicable Owner safety programs to Contractor.

ARTICLE 10—ENGINEER'S STATUS DURING CONSTRUCTION

10.01 *Owner's Representative*

A. Engineer will be Owner's representative during the construction period. The duties and responsibilities and the limitations of authority of Engineer as Owner's representative during construction are set forth in the Contract.

10.02 *Visits to Site*

A. Engineer will make visits to the Site at intervals appropriate to the various stages of construction as Engineer deems necessary in order to observe, as an experienced and qualified design professional, the progress that has been made and the quality of the various aspects of Contractor's executed Work. Based on information obtained during such visits and observations, Engineer, for the benefit of Owner, will determine, in general, if the Work is proceeding in accordance with the Contract Documents. Engineer will not be required to make exhaustive or continuous inspections on the Site to check the quality or quantity of the Work. Engineer's efforts will be directed toward providing for Owner a greater degree of confidence that the completed Work will conform generally to the Contract Documents. On the basis of such visits and observations, Engineer will keep Owner informed of the progress of the Work and will endeavor to guard Owner against defective Work.

B. Engineer's visits and observations are subject to all the limitations on Engineer's authority and responsibility set forth in Paragraph 10.07. Particularly, but without limitation, during or as a result of Engineer's visits or observations of Contractor's Work, Engineer will not supervise, direct, control, or have authority over or be responsible for Contractor's means, methods, techniques, sequences, or procedures of construction, or the safety precautions and programs incident thereto, or for any failure of Contractor to comply with Laws and Regulations applicable to the performance of the Work.

10.03 *Resident Project Representative*

A. If Owner and Engineer have agreed that Engineer will furnish a Resident Project Representative to represent Engineer at the Site and assist Engineer in observing the progress

Copyright© 2018 National Society of Professional Engineers, American Council of Engineering Companies, and American Society of Civil Engineers. All rights reserved.

and quality of the Work, then the authority and responsibilities of any such Resident Project Representative will be as provided in the Supplementary Conditions, and limitations on the responsibilities thereof will be as provided in the Supplementary Conditions and in Paragraph 10.07.

B. If Owner designates an individual or entity who is not Engineer's consultant, agent, or employee to represent Owner at the Site, then the responsibilities and authority of such individual or entity will be as provided in the Supplementary Conditions.

10.04 *Engineer's Authority*

A. Engineer has the authority to reject Work in accordance with Article 14.

B. Engineer's authority as to Submittals is set forth in Paragraph 7.16.

C. Engineer's authority as to design drawings, calculations, specifications, certifications and other Submittals from Contractor in response to Owner's delegation (if any) to Contractor of professional design services, is set forth in Paragraph 7.19.

D. Engineer's authority as to changes in the Work is set forth in Article 11.

E. Engineer's authority as to Applications for Payment is set forth in Article 15.

10.05 *Determinations for Unit Price Work*

A. Engineer will determine the actual quantities and classifications of Unit Price Work performed by Contractor as set forth in Paragraph 13.03.

10.06 *Decisions on Requirements of Contract Documents and Acceptability of Work*

A. Engineer will render decisions regarding the requirements of the Contract Documents, and judge the acceptability of the Work, pursuant to the specific procedures set forth herein for initial interpretations, Change Proposals, and acceptance of the Work. In rendering such decisions and judgments, Engineer will not show partiality to Owner or Contractor, and will not be liable to Owner, Contractor, or others in connection with any proceedings, interpretations, decisions, or judgments conducted or rendered in good faith.

10.07 *Limitations on Engineer's Authority and Responsibilities*

A. Neither Engineer's authority or responsibility under this Article 10 or under any other provision of the Contract, nor any decision made by Engineer in good faith either to exercise or not exercise such authority or responsibility or the undertaking, exercise, or performance of any authority or responsibility by Engineer, will create, impose, or give rise to any duty in contract, tort, or otherwise owed by Engineer to Contractor, any Subcontractor, any Supplier, any other individual or entity, or to any surety for or employee or agent of any of them.

B. Engineer will not supervise, direct, control, or have authority over or be responsible for Contractor's means, methods, techniques, sequences, or procedures of construction, or the safety precautions and programs incident thereto, or for any failure of Contractor to comply with Laws and Regulations applicable to the performance of the Work. Engineer will not be responsible for Contractor's failure to perform the Work in accordance with the Contract Documents.

Copyright© 2018 National Society of Professional Engineers, American Council of Engineering Companies, and American Society of Civil Engineers. All rights reserved.

C. Engineer will not be responsible for the acts or omissions of Contractor or of any Subcontractor, any Supplier, or of any other individual or entity performing any of the Work.

D. Engineer's review of the final Application for Payment and accompanying documentation, and all maintenance and operating instructions, schedules, guarantees, bonds, certificates of inspection, tests and approvals, and other documentation required to be delivered by Contractor under Paragraph 15.06.A, will only be to determine generally that their content complies with the requirements of, and in the case of certificates of inspections, tests, and approvals, that the results certified indicate compliance with the Contract Documents.

E. The limitations upon authority and responsibility set forth in this Paragraph 10.07 also apply to the Resident Project Representative, if any.

10.08 *Compliance with Safety Program*

A. While at the Site, Engineer's employees and representatives will comply with the specific applicable requirements of Owner's and Contractor's safety programs of which Engineer has been informed.

ARTICLE 11—CHANGES TO THE CONTRACT

11.01 *Amending and Supplementing the Contract*

A. The Contract may be amended or supplemented by a Change Order, an Emergency Work Change Directive, or a Field Order.

B. If an amendment or supplement to the Contract includes a change in the Contract Price or the Contract Times, such amendment or supplement must be set forth in a Change Order.

C. All changes to the Contract that involve (1) the performance or acceptability of the Work, (2) the design (as set forth in the Drawings, Specifications, or otherwise), or (3) other engineering or technical matters, must be supported by Engineer's recommendation. Owner and Contractor may amend other terms and conditions of the Contract without the recommendation of the Engineer.

11.02 *Change Orders*

A. Owner and Contractor shall execute appropriate Change Orders covering:

1. Changes in Contract Price or Contract Times which are agreed to by the parties, including any undisputed sum or amount of time for Work actually performed in accordance with an Emergency Work Change Directive;

2. Changes in Contract Price resulting from an Owner set-off, unless Contractor has duly contested such set-off;

3. Changes in the Work which are: (a) ordered by Owner pursuant to Paragraph 11.05, (b) required because of Owner's acceptance of defective Work under Paragraph 14.04 or Owner's correction of defective Work under Paragraph 14.07, or (c) agreed to by the parties, subject to the need for Engineer's recommendation if the change in the Work involves the design (as set forth in the Drawings, Specifications, or otherwise) or other engineering or technical matters; and

Copyright© 2018 National Society of Professional Engineers, American Council of Engineering Companies, and American Society of Civil Engineers. All rights reserved.

4. Changes that embody the substance of any final and binding results under: Paragraph 11.03.B, resolving the impact of an Emergency Work Change Directive; Paragraph 11.09, concerning Change Proposals; Article 12, Claims; Paragraph 13.02.D, final adjustments resulting from allowances; Paragraph 13.03.D, final adjustments relating to determination of quantities for Unit Price Work; and similar provisions.

B. If Owner or Contractor refuses to execute a Change Order that is required to be executed under the terms of Paragraph 11.02.A, it will be deemed to be of full force and effect, as if fully executed.

11.03 Emergency *Work Change Directives*

A. An Emergency Work Change Directive may only be used in emergency situations and will not change the Contract Price or the Contract Times but is evidence that the parties expect that the modification documented by an Emergency Work Change Directive will be incorporated in a subsequently issued Change Order, following negotiations by the parties as to the Emergency Work Change Directive's effect, if any, on the Contract Price and Contract Times; or, if negotiations are unsuccessful, by a determination under the terms of the Contract Documents governing adjustments, expressly including Paragraph 11.07 regarding change of Contract Price.

B. If Owner has issued a written Emergency Work Change Directive and:

1. Contractor believes that an adjustment in Contract Times or Contract Price is necessary, then Contractor shall submit any Change Proposal seeking such an adjustment no later than 30 days after the completion of the Work set out in the Work Change Directive.

2. Owner believes that an adjustment in Contract Times or Contract Price is necessary, then Owner shall submit a Change Order including an adjustment no later than 60 days after issuance of the Work Change Directive.

11.04 *Field Orders*

A. Engineer may authorize minor changes in the Work if the changes do not involve an adjustment in the Contract Price or the Contract Times and are compatible with the design concept of the completed Project as a functioning whole as indicated by the Contract Documents. Such changes will be accomplished by a Field Order and will be binding on Owner and also on Contractor, which shall perform the Work involved promptly.

B. If Contractor believes that a Field Order justifies an adjustment in the Contract Price or Contract Times, then before proceeding with the Work at issue, Contractor shall submit a Change Proposal as provided herein.

11.05 *Owner-Authorized Changes in the Work*

A. Without invalidating the Contract and without notice to any surety, Owner may, at any time or from time to time, order additions, deletions, or revisions in the Work. Changes involving the design (as set forth in the Drawings, Specifications, or otherwise) or other engineering or technical matters will be supported by Engineer's recommendation.

B. Such changes in the Work may be accomplished by a Change Order, if Owner and Contractor have agreed as to the effect, if any, of the changes on Contract Times or Contract Price; or by

Copyright© 2018 National Society of Professional Engineers, American Council of Engineering Companies, and American Society of Civil Engineers. All rights reserved.

a Work Change Directive. Upon receipt of any such document, Contractor shall promptly proceed with the Work involved; or, in the case of a deletion in the Work, promptly cease construction activities with respect to such deleted Work. Added or revised Work must be performed under the applicable conditions of the Contract Documents.

C. Nothing in this Paragraph 11.05 obligates Contractor to undertake work that Contractor reasonably concludes cannot be performed in a manner consistent with Contractor's safety obligations under the Contract Documents or Laws and Regulations.

11.06 *Unauthorized Changes in the Work*

A. Contractor shall not be entitled to an increase in the Contract Price or an extension of the Contract Times with respect to any work performed that is not required by the Contract Documents, as amended, modified, or supplemented, except in the case of an emergency as provided in Paragraph 7.15 or in the case of uncovering Work as provided in Paragraph 14.05.C.2.

11.07 *Change of Contract Price*

A. The Contract Price may only be changed by a Change Order. Any Change Proposal for an adjustment in the Contract Price must comply with the provisions of Paragraph 11.09. Any Claim for an adjustment of Contract Price must comply with the provisions of Article 12.

B. An adjustment in the Contract Price will be determined as follows:

1. Where the Work involved is covered by unit prices contained in the Contract Documents, then by application of such unit prices to the quantities of the items involved (subject to the provisions of Paragraph 13.03);

2. Where the Work involved is not covered by unit prices contained in the Contract Documents, then by a mutually agreed lump sum (which may include an allowance for overhead and profit not necessarily in accordance with Paragraph 11.07.C.2); or

3. Where the Work involved is not covered by unit prices contained in the Contract Documents and the parties do not reach mutual agreement to a lump sum, then on the basis of the Cost of the Work (determined as provided in Paragraph 13.01) plus a Contractor's fee for overhead and profit (determined as provided in Paragraph 11.07.C).

C. *Contractor's Fee*: When applicable, the Contractor's fee for overhead and profit will be determined as follows:

1. A mutually acceptable fixed fee; or

2. If a fixed fee is not agreed upon, then a fee based on the following percentages of the various portions of the Cost of the Work:

a. For costs incurred under Paragraphs 13.01.B.1 and 13.01.B.2, the Contractor's fee will be 15 percent;

b. For costs incurred under Paragraph 13.01.B.3, the Contractor's fee will be 5 percent;

c. Where one or more tiers of subcontracts are on the basis of Cost of the Work plus a fee and no fixed fee is agreed upon, the intent of Paragraphs 11.07.C.2.a and 11.07.C.2.b is that the Contractor's fee will be based on: (1) a fee of 15 percent of the

Copyright© 2018 National Society of Professional Engineers, American Council of Engineering Companies, and American Society of Civil Engineers. All rights reserved.

costs incurred under Paragraphs 13.01.B.1 and 13.01.B.2 by the Subcontractor that actually performs the Work, at whatever tier, and (2) with respect to Contractor itself and to any Subcontractors of a tier higher than that of the Subcontractor that actually performs the Work, a fee of 5 percent of the amount (fee plus underlying costs incurred) attributable to the next lower tier Subcontractor; provided, however, that for any such subcontracted Work the maximum total fee to be paid by Owner will be no greater than 27 percent of the costs incurred by the Subcontractor that actually performs the Work;

d. No fee will be payable on the basis of costs itemized under Paragraphs 13.01.B.4, 13.01.B.5, and 13.01.C;

e. The amount of credit to be allowed by Contractor to Owner for any change which results in a net decrease in Cost of the Work will be the amount of the actual net decrease in Cost of the Work and a deduction of an additional amount equal to 5 percent of such actual net decrease in Cost of the Work; and

f. When both additions and credits are involved in any one change or Change Proposal, the adjustment in Contractor's fee will be computed by determining the sum of the costs in each of the cost categories in Paragraph 13.01.B (specifically, payroll costs, Paragraph 13.01.B.1; incorporated materials and equipment costs, Paragraph 13.01.B.2; Subcontract costs, Paragraph 13.01.B.3; special consultants costs, Paragraph 13.01.B.4; and other costs, Paragraph 13.01.B.5) and applying to each such cost category sum the appropriate fee from Paragraphs 11.07.C.2.a through 11.07.C.2.e, inclusive.

g. This paragraph is supplemented by 23 CFR 635.109, and any conflict herewith, the 23 CFR 635.109 shall prevail.

11.08 *Change of Contract Times*

A. The Contract Times may only be changed by a Change Order. Any Change Proposal for an adjustment in the Contract Times must comply with the provisions of Paragraph 11.09. Any Claim for an adjustment in the Contract Times must comply with the provisions of Article 12.

B. Delay, disruption, and interference in the Work, and any related changes in Contract Times, are addressed in and governed by Paragraph 4.05.

11.09 *Change Proposals*

A. *Purpose and Content*: Contractor shall submit a Change Proposal to Engineer to request an adjustment in the Contract Times or Contract Price; contest an initial decision by Engineer concerning the requirements of the Contract Documents or relating to the acceptability of the Work under the Contract Documents; challenge a set-off against payment due; or seek other relief under the Contract. The Change Proposal will specify any proposed change in Contract Times or Contract Price, or other proposed relief, and explain the reason for the proposed change, with citations to any governing or applicable provisions of the Contract Documents. Each Change Proposal will address only one issue, or a set of closely related issues.

Copyright© 2018 National Society of Professional Engineers, American Council of Engineering Companies, and American Society of Civil Engineers. All rights reserved.

B. *Change Proposal Procedures*

1. *Submittal*: Contractor shall submit each Change Proposal to Engineer within 30 days after the start of the event giving rise thereto, or after such initial decision.

2. *Supporting Data*: The Contractor shall submit supporting data, including the proposed change in Contract Price or Contract Time (if any), to the Engineer and Owner within 15 days after the submittal of the Change Proposal.

    a. Change Proposals based on or related to delay, interruption, or interference must comply with the provisions of Paragraphs 4.05.D and 4.05.E.

    b. Change proposals related to a change of Contract Price must include full and detailed accounts of materials incorporated into the Work and labor and equipment used for the subject Work.

    The supporting data must be accompanied by a written statement that the supporting data are accurate and complete, and that any requested time or price adjustment is the entire adjustment to which Contractor believes it is entitled as a result of said event.

3. *Engineer's Initial Review*: Engineer will advise Owner regarding the Change Proposal, and consider any comments or response from Owner regarding the Change Proposal. If in its discretion Engineer concludes that additional supporting data is needed before conducting a full review and making a recommendation regarding the Change Proposal, then Engineer may request that Contractor submit such additional supporting data by a date specified by Engineer, prior to Engineer beginning its full review of the Change Proposal.

4. *Engineer's Full Review and Recommendation on the Change Proposal*: Upon receipt of Contractor's supporting data (including any additional data requested by Engineer), Engineer will conduct a full review of each Change Proposal and, within 30 days after such receipt of the Contractor's supporting data, either recommend approval of the Change Proposal in whole, deny it in whole, or approve it in part and deny it in part. Such actions must be in writing, with a copy provided to Owner and Contractor. If Engineer does not take action on the Change Proposal within 30 days, then either Owner or Contractor may at any time thereafter submit a letter to the other party indicating that as a result of Engineer's inaction the Change Proposal is deemed denied, thereby commencing the time for appeal of the denial under Article 12.

5. *Binding Decision*: Engineer's recommendation is sent to the Owner who shall render a final decision. The Owner's decision is final and binding upon Contractor, unless Contractor appeals the decision by filing a Claim under Article 12.

C. *Resolution of Certain Change Proposals*: If the Change Proposal does not involve the design (as set forth in the Drawings, Specifications, or otherwise), the acceptability of the Work, or other engineering or technical matters, then Engineer will notify the parties in writing that the Engineer is unable to resolve the Change Proposal. For purposes of further resolution of such a Change Proposal, such notice will be deemed a denial, and Contractor may choose to seek resolution under the terms of Article 12.

Copyright© 2018 National Society of Professional Engineers, American Council of Engineering Companies, and American Society of Civil Engineers. All rights reserved.

D. *Post-Completion*: Contractor shall not submit any Change Proposals after Engineer issues a written recommendation of final payment pursuant to Paragraph 15.06.B.

11.10 *Notification to Surety*

A. If the provisions of any bond require notice to be given to a surety of any change affecting the general scope of the Work or the provisions of the Contract Documents (including, but not limited to, Contract Price or Contract Times), the giving of any such notice will be Contractor's responsibility. The amount of each applicable bond will be adjusted to reflect the effect of any such change.

ARTICLE 12—CLAIMS - DELETED IN ITS ENTIRETY12.01 CLAIMS - DELETED IN ITS ENTIRETY: PLEASE REFER TO LAP DIVISION I SPECIFICATIONS PACKAGE, SECTION(S) 5-12, "CLAIMS BY CONTRACTOR."

A. DELETED IN ITS ENTIRETY.1. DELETED IN ITS ENTIRETY.2. DELETED IN ITS ENTIRETY.3. DELETED IN ITS ENTIRETY.4. DELETED IN ITS ENTIRETY.B. DELETED IN ITS ENTIRETY.C. DELETED IN ITS ENTIRETY.D. DELETED IN ITS ENTIRETY.1. 2. DELETED IN ITS ENTIRETY.3. DELETED IN ITS ENTIRETY.E. DELETED IN ITS ENTIRETY.F. DELETED IN ITS ENTIRETY.G. DELETED IN ITS ENTIRETY.ARTICLE 13—COST OF THE WORK; ALLOWANCES; UNIT PRICE WORK

13.01 *Cost of the Work*

A. *Purposes for Determination of Cost of the Work*: The term Cost of the Work means the sum of all costs necessary for the proper performance of the Work at issue, as further defined below. The provisions of this Paragraph 13.01 are used for two distinct purposes:

1. To determine Cost of the Work when Cost of the Work is a component of the Contract Price, under cost-plus-fee, time-and-materials, or other cost-based terms; or

2. When needed to determine the value of a Change Order, Change Proposal, Claim, set-off, or other adjustment in Contract Price. When the value of any such adjustment is determined on the basis of Cost of the Work, Contractor is entitled only to those additional or incremental costs required because of the change in the Work or because of the event giving rise to the adjustment.

B. *Allowable Costs for Extra Work:* Refer to Specifications 4-3.2.1 and 4-3.2.2.

13.02 *Allowances*

A. It is understood that Contractor has included in the Contract Price all allowances so named in the Contract Documents and shall cause the Work so covered to be performed for such sums and by such persons or entities as may be acceptable to Owner and Engineer.

B. *Cash Allowances*: Contractor agrees that:

1. the cash allowances include the cost to Contractor (less any applicable trade discounts) of materials and equipment required by the allowances to be delivered at the Site, and all applicable taxes; and

2. Contractor's costs for unloading and handling on the Site, labor, installation, overhead, profit, and other expenses contemplated for the cash allowances have been included in

Copyright© 2018 National Society of Professional Engineers, American Council of Engineering Companies, and American Society of Civil Engineers. All rights reserved.

the Contract Price and not in the allowances, and no demand for additional payment for any of the foregoing will be valid.

C. *Owner's Contingency Allowance*: Contractor agrees that an Owner's contingency allowance, if any, is for the sole use of Owner to cover unanticipated costs.

D. Prior to final payment, an appropriate Change Order will be issued as recommended by Engineer to reflect actual amounts due Contractor for Work covered by allowances, and the Contract Price will be correspondingly adjusted.

13.03 *Unit Price Work*

A. Where the Contract Documents provide that all or part of the Work is to be Unit Price Work, initially the Contract Price will be deemed to include for all Unit Price Work an amount equal to the sum of the unit price for each separately identified item of Unit Price Work times the estimated quantity of each item as indicated in the Agreement.

B. The estimated quantities of items of Unit Price Work are estimates and are solely for the purpose of comparison of Bids and determining an initial Contract Price. Payments to Contractor for Unit Price Work will be based on actual quantities.

C. Each unit price shall be guaranteed and will be deemed to include an amount considered by Contractor to be adequate to cover Contractor's overhead and profit for each separately identified item.

D. Engineer will determine the actual quantities and classifications of Unit Price Work performed by Contractor. Engineer will review with Contractor the Engineer's preliminary determinations on such matters before rendering a written decision thereon (by recommendation of an Application for Payment or otherwise). Engineer's written decision thereon will be final and binding (except as modified by Engineer to reflect changed factual conditions or more accurate data) upon Owner and Contractor, and the final adjustment of Contract Price will be set forth in a Change Order, subject to the provisions of the following paragraph.

E. *Adjustments in Unit Price*

1. Contractor or Owner shall be entitled to an adjustment in the unit price with respect to an item of Unit Price Work based on Specification 4-3.

ARTICLE 14—TESTS AND INSPECTIONS; CORRECTION, REMOVAL, OR ACCEPTANCE OF DEFECTIVE WORK

14.01 *Access to Work*

A. Owner, Engineer, their consultants and other representatives and personnel of Owner, independent testing laboratories, and authorities having jurisdiction have access to the Site and the Work at reasonable times for their observation, inspection, and testing. Contractor shall provide them proper and safe conditions for such access and advise them of Contractor's safety procedures and programs so that they may comply with such procedures and programs as applicable.

Copyright© 2018 National Society of Professional Engineers, American Council of Engineering Companies, and American Society of Civil Engineers. All rights reserved.

14.02 *Tests, Inspections, and Approvals*

A. Contractor shall give Engineer timely notice of readiness of the Work (or specific parts thereof) for all required inspections and tests, and shall cooperate with inspection and testing personnel to facilitate required inspections and tests.

B. Owner shall retain and pay for the services of an independent inspector, testing laboratory, or other qualified individual or entity to perform all inspections and tests expressly required by the Contract Documents to be furnished and paid for by Owner, except that costs incurred in connection with tests or inspections of covered Work will be governed by the provisions of Paragraph 14.05.

C. If Laws or Regulations of any public body having jurisdiction require any Work (or part thereof) specifically to be inspected, tested, or approved by an employee or other representative of such public body, Contractor shall assume full responsibility for arranging and obtaining such inspections, tests, or approvals, pay all costs in connection therewith, and furnish Engineer the required certificates of inspection or approval.

D. Contractor shall be responsible for arranging, obtaining, and paying for all inspections and tests required:

1. by the Contract Documents, unless the Contract Documents expressly allocate responsibility for a specific inspection or test to Owner;

2. to attain Owner's and Engineer's acceptance of materials or equipment to be incorporated in the Work;

3. by manufacturers of equipment furnished under the Contract Documents;

4. for testing, adjusting, and balancing of mechanical, electrical, and other equipment to be incorporated into the Work; and

5. for acceptance of materials, mix designs, or equipment submitted for approval prior to Contractor's purchase thereof for incorporation in the Work.

Such inspections and tests will be performed by independent inspectors, testing laboratories, or other qualified individuals or entities acceptable to Owner and Engineer.

E. If the Contract Documents require the Work (or part thereof) to be approved by Owner, Engineer, or another designated individual or entity, then Contractor shall assume full responsibility for arranging and obtaining such approvals.

F. If any Work (or the work of others) that is to be inspected, tested, or approved is covered by Contractor without written concurrence of Engineer, Contractor shall, if requested by Engineer, uncover such Work for observation. Such uncovering will be at Contractor's expense unless Contractor had given Engineer timely notice of Contractor's intention to cover the same and Engineer had not acted with reasonable promptness in response to such notice.

14.03 *Defective Work*

A. *Contractor's Obligation*: It is Contractor's obligation to assure that the Work is not defective.

B. *Engineer's Authority*: Engineer has the authority to determine whether Work is defective, and to reject defective Work.

Copyright© 2018 National Society of Professional Engineers, American Council of Engineering Companies, and American Society of Civil Engineers. All rights reserved.

C. *Notice of Defects*: Prompt written notice of all defective Work of which Owner or Engineer has actual knowledge will be given to Contractor.

D. *Correction, or Removal and Replacement*: Promptly after receipt of written notice of defective Work, Contractor shall correct all such defective Work, whether or not fabricated, installed, or completed, or, if Engineer has rejected the defective Work, remove it from the Project and replace it with Work that is not defective.

E. *Preservation of Warranties*: When correcting defective Work, Contractor shall take no action that would void or otherwise impair Owner's special warranty and guarantee, if any, on said Work.

F. *Costs and Damages*: In addition to its correction, removal, and replacement obligations with respect to defective Work, Contractor shall pay all claims, costs, losses, and damages arising out of or relating to defective Work, including but not limited to the cost of the inspection, testing, correction, removal, replacement, or reconstruction of such defective Work, fines levied against Owner by governmental authorities because the Work is defective, and the costs of repair or replacement of work of others resulting from defective Work. Prior to final payment, if Owner and Contractor are unable to agree as to the measure of such claims, costs, losses, and damages resulting from defective Work, then Owner may impose a reasonable set-off against payments due under Article 15.

14.04 *Acceptance of Defective Work*

A. If, instead of requiring correction or removal and replacement of defective Work, Owner prefers to accept it, Owner may do so (subject, if such acceptance occurs prior to final payment, to Engineer's confirmation that such acceptance is in general accord with the design intent and applicable engineering principles, and will not endanger public safety). Contractor shall pay all claims, costs, losses, and damages attributable to Owner's evaluation of and determination to accept such defective Work (such costs to be approved by Engineer as to reasonableness), and for the diminished value of the Work to the extent not otherwise paid by Contractor. If any such acceptance occurs prior to final payment, the necessary revisions in the Contract Documents with respect to the Work will be incorporated in a Change Order. If the parties are unable to agree as to the decrease in the Contract Price, reflecting the diminished value of Work so accepted, then Owner may impose a reasonable set-off against payments due under Article 15. If the acceptance of defective Work occurs after final payment, Contractor shall pay an appropriate amount to Owner.

B. Owner shall not be deemed to have accepted any defective work from Contractor that was not discovered by Engineer or Owner unless the defect was specifically detailed to Owner in writing by Contractor notifying Owner of the defective work and Owner notifies Contractor in writing that it will accept defective work (whether as-is, by receiving credit, or receiving other compensation, losses, or damage from Contractor as discussed above in Paragraph 14.04.A.) Contractor recognizes and understands that it shall not be relieved of responsibility or liability with performing defective work even if such defective work previously passed inspection by any inspector, including, without limitation, an inspector with the governing building department or a threshold inspector.

Copyright© 2018 National Society of Professional Engineers, American Council of Engineering Companies, and American Society of Civil Engineers. All rights reserved.

14.05 *Uncovering Work*

A. Engineer has the authority to require additional inspection or testing of the Work, whether or not the Work is fabricated, installed, or completed.

B. If any Work is covered contrary to the written request of Engineer, then Contractor shall, if requested by Engineer, uncover such Work for Engineer's observation, and then replace the covering, all at Contractor's expense.

C. If Engineer considers it necessary or advisable that covered Work be observed by Engineer or inspected or tested by others, then Contractor, at Engineer's request, shall uncover, expose, or otherwise make available for observation, inspection, or testing as Engineer may require, that portion of the Work in question, and provide all necessary labor, material, and equipment.

1. If it is found that the uncovered Work is defective, Contractor shall be responsible for all claims, costs, losses, and damages arising out of or relating to such uncovering, exposure, observation, inspection, and testing, and of satisfactory replacement or reconstruction (including but not limited to all costs of repair or replacement of work of others); and pending Contractor's full discharge of this responsibility the Owner shall be entitled to impose a reasonable set-off against payments due under Article 15.

2. If the uncovered Work is not found to be defective, Contractor shall be allowed an increase in the Contract Price or an extension of the Contract Times, directly attributable to such uncovering, exposure, observation, inspection, testing, replacement, and reconstruction. If the parties are unable to agree as to the amount or extent thereof, then Contractor may submit a Change Proposal within 30 days of the determination that the Work is not defective.

14.06 *Owner May Stop the Work*

A. If the Work is defective, or Contractor fails to supply sufficient skilled workers or suitable materials or equipment, or fails to perform the Work in such a way that the completed Work will conform to the Contract Documents, then Owner may order Contractor to stop the Work, or any portion thereof, until the cause for such order has been eliminated; however, this right of Owner to stop the Work will not give rise to any duty on the part of Owner to exercise this right for the benefit of Contractor, any Subcontractor, any Supplier, any other individual or entity, or any surety for, or employee or agent of any of them. The Owner shall incur no liability for delays occasioned by any stop-work order issued in accordance with this paragraph.

14.07 *Owner May Correct Defective Work*

A. If Contractor fails within a reasonable time after written notice from Engineer to correct defective Work, or to remove and replace defective Work as required by Engineer, then Owner may, after 7 days' written notice to Contractor, correct or remedy any such deficiency.

B. In exercising the rights and remedies under this Paragraph 14.07, Owner shall proceed expeditiously. In connection with such corrective or remedial action, Owner may exclude Contractor from all or part of the Site, take possession of all or part of the Work and suspend Contractor's services related thereto, and incorporate in the Work all materials and

Copyright© 2018 National Society of Professional Engineers, American Council of Engineering Companies, and American Society of Civil Engineers. All rights reserved.

equipment stored at the Site or for which Owner has paid Contractor but which are stored elsewhere. Contractor shall allow Owner, Owner's representatives, agents and employees, Owner's other contractors, and Engineer and Engineer's consultants access to the Site to enable Owner to exercise the rights and remedies under this paragraph.

C. All claims, costs, losses, and damages incurred or sustained by Owner in exercising the rights and remedies under this Paragraph 14.07 will be charged against Contractor as set-offs against payments due under Article 15. Such claims, costs, losses and damages will include but not be limited to all costs of repair, or replacement of work of others destroyed or damaged by correction, removal, or replacement of Contractor's defective Work.

D. Contractor shall not be allowed an extension of the Contract Times because of any delay in the performance of the Work attributable to the exercise by Owner of Owner's rights and remedies under this Paragraph 14.07.

ARTICLE 15—PAYMENTS TO CONTRACTOR; SET-OFFS; COMPLETION; CORRECTION PERIOD

15.01 *Progress Payments*

A. *Basis for Progress Payments*: The Schedule of Values established as provided in Article 2 will serve as the basis for progress payments and will be incorporated into a form of Application for Payment acceptable to Engineer and Owner. Progress payments for Unit Price Work will be based on the number of units completed during the pay period, as determined under the provisions of Paragraph 13.03. Progress payments for cost-based Work will be based on Cost of the Work completed by Contractor during the pay period.

B. *Applications for Payments*

1. Contractor, on the 25th of each month, shall submit to Engineer for review an Application for Payment (in a form approved by Owner) filled out and signed by Contractor covering the Work completed as of the date of the Application and accompanied by such supporting documentation as is required by the Contract Documents.

2. If payment is requested on the basis of materials and equipment not incorporated in the Work but delivered and suitably stored at the Site or at another location agreed to in writing, the Application for Payment must also be accompanied by: (a) a bill of sale, invoice, copies of subcontract or purchase order payments, or other documentation establishing full payment by Contractor for the materials and equipment; (b) at Owner's request, documentation warranting that Owner has received the materials and equipment free and clear of all Liens; and (c) evidence that the materials and equipment are covered by appropriate property insurance, a warehouse bond, or other arrangements to protect Owner's interest therein, all of which must be satisfactory to Owner.

3. Beginning with the second Application for Payment, each Application must include an affidavit of Contractor stating that all previous progress payments received by Contractor have been applied to discharge Contractor's legitimate obligations associated with prior Applications for Payment.

Copyright© 2018 National Society of Professional Engineers, American Council of Engineering Companies, and American Society of Civil Engineers. All rights reserved.

4. The amount of retainage with respect to progress payments will be as stipulated in the Agreement.

C. *Review of Applications*

1. Engineer will, within 10 days after each Application for Payment is stamped as received by Engineer, including each resubmittal, either indicate in writing a recommendation of payment and present the Application to Owner, or return the Application to Contractor indicating in writing Engineer's reasons for refusing to recommend payment and the action necessary to make payment application proper. In the latter case, Contractor shall make the necessary corrections and resubmit the Application.

2. Engineer's recommendation of any payment requested in an Application for Payment will constitute a representation by Engineer to Owner, based on Engineer's observations of the executed Work as an experienced and qualified design professional, and on Engineer's review of the Application for Payment and the accompanying data and schedules, that to the best of Engineer's knowledge, information and belief:

   a. the Work has progressed to the point indicated;

   b. the quality of the Work is generally in accordance with the Contract Documents (subject to an evaluation of the Work as a functioning whole prior to or upon Substantial Completion, the results of any subsequent tests called for in the Contract Documents, a final determination of quantities and classifications for Unit Price Work under Paragraph 13.03, and any other qualifications stated in the recommendation); and

   c. the conditions precedent to Contractor's being entitled to such payment appear to have been fulfilled in so far as it is Engineer's responsibility to observe the Work.

3. By recommending any such payment Engineer will not thereby be deemed to have represented that:

   a. inspections made to check the quality or the quantity of the Work as it has been performed have been exhaustive, extended to every aspect of the Work in progress, or involved detailed inspections of the Work beyond the responsibilities specifically assigned to Engineer in the Contract; or

   b. there may not be other matters or issues between the parties that might entitle Contractor to be paid additionally by Owner or entitle Owner to withhold payment to Contractor.

4. Neither Engineer's review of Contractor's Work for the purposes of recommending payments nor Engineer's recommendation of any payment, including final payment, will impose responsibility on Engineer:

   a. to supervise, direct, or control the Work;

   b. for the means, methods, techniques, sequences, or procedures of construction, or the safety precautions and programs incident thereto;

   c. for Contractor's failure to comply with Laws and Regulations applicable to Contractor's performance of the Work;

Copyright© 2018 National Society of Professional Engineers, American Council of Engineering Companies, and American Society of Civil Engineers. All rights reserved.

d. to make any examination to ascertain how or for what purposes Contractor has used the money paid by Owner; or

e. to determine that title to any of the Work, materials, or equipment has passed to Owner free and clear of any Liens.

5. Neither Engineer's review of Contractor's Work for purposes of recommending payments nor Engineer's recommendation of any payment shall relieve Contractor of responsibility or liability for defects in the Work.

6. Engineer may refuse to recommend the whole or any part of any payment if, in Engineer's opinion, it would be incorrect to make the representations to Owner stated in Paragraph 15.01.C.2.

6. Engineer will recommend reductions in payment (set-offs) necessary in Engineer's opinion to protect Owner from loss because:

a. the Work is defective, requiring correction or replacement;

b. the Contract Price has been reduced by Change Orders;

c. Owner has been required to correct defective Work in accordance with Paragraph 14.07, or has accepted defective Work pursuant to Paragraph 14.04;

d. Owner has been required to remove or remediate a Hazardous Environmental Condition for which Contractor is responsible; or

e. Engineer has actual knowledge of the occurrence of any of the events that would constitute a default by Contractor and therefore justify termination for cause under the Contract Documents.

D. *Payment Becomes Due*

1. Subject to the provisions of Paragraph 15.01.E. and Section 218. 735, Florida Statutes, after presentation of the Application for Payment to Owner with Engineer's recommendation, the amount recommended (subject to any Owner set-offs) shall be paid by Owner in accordance with Section 218.735, Florida Statutes, within 25 business days after the date on which the payment application is stamped as received by Engineer.

E. *Reductions in Payment by Owner*

1. In addition to any reductions in payment (set-offs) recommended by Engineer, Owner is entitled to impose a set-off against payment based on any of the following:

a. Claims have been made against Owner based on Contractor's conduct in the performance or furnishing of the Work, or Owner has incurred costs, losses, or damages resulting from Contractor's conduct in the performance or furnishing of the Work, including but not limited to claims, costs, losses, or damages from workplace injuries, adjacent property damage, non-compliance with Laws and Regulations, and patent infringement;

b. Contractor has failed to take reasonable and customary measures to avoid damage, delay, disruption, and interference with other work at or adjacent to the Site;

c. Contractor has failed to provide and maintain required bonds or insurance;

Copyright© 2018 National Society of Professional Engineers, American Council of Engineering Companies, and American Society of Civil Engineers. All rights reserved.

d. Owner has been required to remove or remediate a Hazardous Environmental Condition for which Contractor is responsible;

e. Owner has incurred extra charges or engineering costs related to submittal reviews, evaluations of proposed substitutes, tests and inspections, or return visits to manufacturing or assembly facilities;

f. The Work is defective, requiring correction or replacement;

g. Owner has been required to correct defective Work in accordance with Paragraph 14.07, or has accepted defective Work pursuant to Paragraph 14.04;

h. The Contract Price has been reduced by Change Orders;

i. An event has occurred that would constitute a default by Contractor and therefore justify a termination for cause;

j. Liquidated or other damages have accrued as a result of Contractor's failure to achieve Milestones, Substantial Completion, or final completion of the Work;

k. Liens have been filed in connection with the Work, except where Contractor has delivered a specific bond satisfactory to Owner to secure the satisfaction and discharge of such Liens; or

l. Other items entitle Owner to a set-off against the amount recommended.

2. If Owner imposes any set-off against payment, whether based on its own knowledge or on the written recommendations of Engineer, Owner will give Contractor immediate written notice (with a copy to Engineer) stating the reasons for such action and the specific amount of the reduction, and promptly pay Contractor any amount remaining after deduction of the amount so withheld. Owner shall promptly pay Contractor the amount so withheld, or any adjustment thereto agreed to by Owner and Contractor, if Contractor remedies the reasons for such action. The reduction imposed will be binding on Contractor unless it duly submits a Change Proposal contesting the reduction.

3. Upon a subsequent determination that Owner's refusal of payment was not justified, the amount wrongfully withheld will be treated as an amount due as determined by Paragraph 15.01.D.1 and subject to interest as provided in the Agreement.

15.02 *Contractor's Warranty of Title*

A. Contractor warrants and guarantees that title to all Work, materials, and equipment furnished under the Contract will pass to Owner free and clear of (1) all Liens and other title defects, and (2) all patent, licensing, copyright, or royalty obligations, no later than 7 days after the time of payment by Owner.

15.03 *Substantial Completion*

A. When Contractor considers the entire Work ready for its intended use Contractor shall notify Owner and Engineer in writing that the entire Work is substantially complete and request that Engineer issue a certificate of Substantial Completion. Contractor shall at the same time submit to Owner and Engineer an initial draft of Punch List items to be completed or corrected

Copyright© 2018 National Society of Professional Engineers, American Council of Engineering Companies, and American Society of Civil Engineers. All rights reserved.

before final payment. Substantial Completion cannot occur before the Owner is able to begin to utilize the entire Work for the purposes for which it was intended.

B. Promptly after Contractor's notification, Owner, Contractor, and Engineer shall make an inspection of the Work to determine the status of completion. If Engineer does not consider the Work substantially complete, Engineer will notify Contractor in writing giving the reasons therefor.

C. If Engineer considers the Work substantially complete, Engineer will deliver to Owner a preliminary certificate of Substantial Completion which will fix the date of Substantial Completion. Engineer shall attach to the certificate a Punch List of items to be completed or corrected before final payment Owner shall have 7 days after receipt of the preliminary certificate during which to make written objection to Engineer as to any provisions of the certificate or attached Punch List. If, after considering the objections to the provisions of the preliminary certificate, Engineer concludes that the Work is not substantially complete, Engineer will, within 14 days after submission of the preliminary certificate to Owner, notify Contractor in writing that the Work is not substantially complete, stating the reasons therefor. If Owner does not object to the provisions of the certificate, or if despite consideration of Owner's objections Engineer concludes that the Work is substantially complete, then Engineer will, within said 14 days, execute and deliver to Owner and Contractor a final certificate of Substantial Completion (with a revised Punch List of items to be completed or corrected) reflecting such changes from the preliminary certificate as Engineer believes justified after consideration of any objections from Owner.

D. At the time of receipt of the preliminary certificate of Substantial Completion, Owner and Contractor will confer regarding Owner's use or occupancy of the Work following Substantial Completion, review the builder's risk insurance policy with respect to the end of the builder's risk coverage, and confirm the transition to coverage of the Work under a permanent property insurance policy held by Owner. Unless Owner and Contractor agree otherwise in writing, Owner shall bear responsibility for security, operation, protection of the Work, property insurance, maintenance, heat, and utilities upon Owner's use or occupancy of the Work.

E. After Substantial Completion the Contractor shall promptly begin work on the Punch List of items to be completed or corrected prior to final payment. In appropriate cases Contractor may submit monthly Applications for Payment for completed Punch List items, following the progress payment procedures set forth above.

F. Owner shall have the right to exclude Contractor from the Site after the date of Substantial Completion subject to allowing Contractor reasonable access to remove its property and complete or correct items on the Punch List.

15.04 *Partial Use or Occupancy*

A. Prior to Substantial Completion of all the Work, Owner may use or occupy any substantially completed part of the Work which has specifically been identified in the Contract Documents, or which Owner, Engineer, and Contractor agree constitutes a separately functioning and usable part of the Work that can be used by Owner for its intended purpose without

Copyright© 2018 National Society of Professional Engineers, American Council of Engineering Companies, and American Society of Civil Engineers. All rights reserved.

significant interference with Contractor's performance of the remainder of the Work, subject to the following conditions:

1. At any time, Owner may request in writing that Contractor permit Owner to use or occupy any such part of the Work that Owner believes to be substantially complete. If and when Contractor agrees that such part of the Work is substantially complete, Contractor, Owner, and Engineer will follow the procedures of Paragraph 15.03.A through 15.03.E for that part of the Work.

2. At any time, Contractor may notify Owner and Engineer in writing that Contractor considers any such part of the Work substantially complete and request Engineer to issue a certificate of Substantial Completion for that part of the Work.

3. Within a reasonable time after either such request, Owner, Contractor, and Engineer shall make an inspection of that part of the Work to determine its status of completion. If Engineer does not consider that part of the Work to be substantially complete, Engineer will notify Owner and Contractor in writing giving the reasons therefor. If Engineer considers that part of the Work to be substantially complete, the provisions of Paragraph 15.03 will apply with respect to certification of Substantial Completion of that part of the Work and the division of responsibility in respect thereof and access thereto.

4. No use or occupancy or separate operation of part of the Work may occur prior to compliance with the requirements of Paragraph 6.04 regarding builder's risk or other property insurance.

15.05 *Final Inspection – Punch List*

A. Upon written notice from Contractor that the entire Work or an agreed portion thereof is complete, Engineer will promptly make a final inspection with Owner and Contractor and will notify Contractor in writing of all particulars in which this inspection reveals that the Work, or agreed portion thereof, is incomplete or defective. Contractor shall immediately take such measures as are necessary to complete such Work or remedy such deficiencies.

15.06 *Final Payment*

A. *Application for Payment*

1. After Contractor has, in the opinion of Engineer, satisfactorily completed all corrections identified during the final inspection and has delivered, in accordance with the Contract Documents, all maintenance and operating instructions, schedules, guarantees, bonds, certificates or other evidence of insurance, certificates of inspection, annotated record documents (as provided in Paragraph 7.12), and other documents, Contractor may make application for final payment.

2. The final Application for Payment must be accompanied (except as previously delivered) by:

a. all documentation called for in the Contract Documents, including but not limited to, the evidence that Contractor maintains completed operations coverage for its required commercial general liability (CGL) insurance;

Copyright© 2018 National Society of Professional Engineers, American Council of Engineering Companies, and American Society of Civil Engineers. All rights reserved.

b. consent of the surety, if any, to final payment;

c. satisfactory evidence that all title issues have been resolved such that title to all Work, materials, and equipment has passed to Owner free and clear of any Liens or other title defects, or will so pass upon final payment.

d. a list of all duly pending Change Proposals and Claims; and

e. complete and legally effective final releases or waivers (satisfactory to Owner) of all Lien rights and Liens filed in connection with the Work.

3. In lieu of the final releases or waivers of Liens specified in Paragraph 15.06.A.2 and as approved by Owner, Contractor may furnish receipts or releases in full and an affidavit of Contractor whereby Contractor swears that: (a) all payrolls, services, material, and equipment bills and other indebtedness connected with the Work for which Owner has paid Contractor through the date of Contractor's final Application for Payment have been paid by Contractor; and (b) all payrolls, material and equipment bills, and other indebtedness connected with the Work for which Owner will pay Contractor in the final Application for Payment will represent Contractor's receipt of all payments for the Work except for the specifically enumerated Claims (and Claims not specifically enumerated are deemed released and waived) and that Contractor will promptly pay its Subcontractors and Suppliers upon its receipt of the final payment. If any Subcontractor or Supplier fails to furnish such a release or receipt in full, Contractor may furnish a bond or other collateral satisfactory to Owner to indemnify Owner against any Lien, or Owner at its option may issue joint checks payable to Contractor and specified Subcontractors and Suppliers.

4. The documents and materials that Contractor is required to submit to accompany its Final Application for Payment (as set forth in this Paragraph 15.06) are conditions precedent to issuance of final payment.

B. *Engineer's Review of Final Application and Recommendation of Payment*: If, on the basis of Engineer's observation of the Work during construction and final inspection, and Engineer's review of the final Application for Payment and accompanying documentation as required by the Contract Documents, Engineer is satisfied that the Work has been completed and Contractor's other obligations under the Contract have been fulfilled, Engineer will, within 10 days after receipt of the final Application for Payment, indicate in writing Engineer's recommendation of final payment and present the final Application for Payment to Owner for payment. Such recommendation will account for any set-offs against payment that are necessary in Engineer's opinion to protect Owner from loss for the reasons stated above with respect to progress payments. Otherwise, Engineer will return the Application for Payment to Contractor, indicating in writing the reasons for refusing to recommend final payment, in which case Contractor shall make the necessary corrections and resubmit the Application for Payment.

C. *Notice of Acceptability*: In support of its recommendation of payment of the final Application for Payment, Engineer will also give written notice to Owner and Contractor that the Work is acceptable, subject to stated limitations in the notice and to the provisions of Paragraph 15.07.

Copyright© 2018 National Society of Professional Engineers, American Council of Engineering Companies, and American Society of Civil Engineers. All rights reserved.

D. *Completion of Work*: The Work is complete (subject to surviving obligations) when it is ready for final payment as established by the Engineer's written recommendation of final payment and issuance of notice of the acceptability of the Work.

E. *Final Payment Becomes Due*: Upon receipt from Engineer of the final Application for Payment and accompanying documentation, Owner shall set off against the amount recommended by Engineer for final payment any further sum to which Owner is entitled, including but not limited to set-offs for liquidated damages and set-offs allowed under the provisions of this Contract with respect to progress payments. Owner shall pay the resulting balance due to Contractor within Twenty-five (25) days of the final Application for Payment being stamped as received by Engineer.

15.07 *Waiver of Claims*

A. By making final payment, Owner waives its claim or right to liquidated damages or other damages for late completion by Contractor, except as set forth in an outstanding Claim, appeal under the provisions of Article 17, set-off, or express reservation of rights by Owner. Owner reserves all other claims or rights after final payment.

B. The acceptance of final payment by Contractor will constitute a waiver by Contractor of all claims and rights against Owner other than those pending matters that have been duly submitted as a Claim, or appealed under the provisions of Article 17.

15.08 *Correction Period*

A. If within one year after the date of Substantial Completion (or such longer period of time as may be prescribed by the Supplementary Conditions or the terms of any applicable special guarantee required by the Contract Documents), Owner gives Contractor written notice that any Work has been found to be defective, or that Contractor's repair of any damages to the Site or adjacent areas has been found to be defective, then after receipt of such notice of defect Contractor shall promptly, without cost to Owner and in accordance with Owner's written instructions:

1. correct the defective repairs to the Site or such adjacent areas;
2. correct such defective Work;
3. remove the defective Work from the Project and replace it with Work that is not defective, if the defective Work has been rejected by Owner, and
4. satisfactorily correct or repair or remove and replace any damage to other Work, to the work of others, or to other land or areas resulting from the corrective measures.

B. Owner shall give any such notice of defect within 60 days of the discovery that such Work or repairs is defective. If such notice is given within such 60 days but after the end of the correction period, the notice will be deemed a notice of defective Work under Paragraph 7.17.B.

C. If, after receipt of a notice of defect within 60 days and within the correction period, Contractor does not promptly comply with the terms of Owner's written instructions, or in an emergency where delay would cause serious risk of loss or damage, Owner may have the defective Work corrected or repaired or may have the rejected Work removed and replaced.

Copyright© 2018 National Society of Professional Engineers, American Council of Engineering Companies, and American Society of Civil Engineers. All rights reserved.

Contractor shall pay all costs, losses, and damages (including but not limited to all fees and charges of engineers, architects, attorneys, and other professionals and all court or arbitration or other dispute resolution costs) arising out of or relating to such correction or repair or such removal and replacement (including but not limited to all costs of repair or replacement of work of others). Contractor's failure to pay such costs, losses, and damages within 10 days of invoice from Owner will be deemed the start of an event giving rise to a Claim under Paragraph 12.01.B, such that any related Claim must be brought within 30 days of the failure to pay.

D. In special circumstances where a particular item of equipment is placed in continuous service before Substantial Completion of all the Work, the correction period for that item may start to run from an earlier date if so provided in the Specifications.

E. Where defective Work (and damage to other Work resulting therefrom) has been corrected or removed and replaced under this paragraph, the correction period hereunder with respect to such Work will be extended for an additional period of one year after such correction or removal and replacement has been satisfactorily completed.

F. Contractor's obligations under this paragraph are in addition to all other obligations and warranties. The provisions of this paragraph are not to be construed as a substitute for, or a waiver of, the provisions of any applicable statute of limitation or repose.

ARTICLE 16—SUSPENSION OF WORK AND TERMINATION

16.01 *Owner May Suspend Work*

A. At any time and without cause, Owner may suspend the Work or any portion thereof for a period of not more than 90 consecutive days by written notice to Contractor and Engineer. Such notice will fix the date on which Work will be resumed. Contractor shall resume the Work on the date so fixed. Contractor shall be entitled to an adjustment in the Contract Price or an extension of the Contract Times directly attributable to any such suspension. Any Change Proposal seeking such adjustments must be submitted no later than 30 days after the date fixed for resumption of Work.

16.02 *Owner May Terminate for Cause*

A. The occurrence of any one or more of the following events will constitute a default by Contractor and justify termination for cause:

1. Contractor's persistent failure to perform the Work in accordance with the Contract Documents (including, but not limited to, failure to supply sufficient skilled workers or suitable materials or equipment, or failure to adhere to the Progress Schedule);

2. Failure of Contractor to perform or otherwise to comply with a material term of the Contract Documents;

3. Contractor's disregard of Laws or Regulations of any public body having jurisdiction;

4. Contractor's repeated disregard of the authority of Owner or Engineer:

5. Contractor's failure to timely pay Subcontractors and Suppliers after it receives payment from Owner, or

Copyright© 2018 National Society of Professional Engineers, American Council of Engineering Companies, and American Society of Civil Engineers. All rights reserved.

6. Contractor's failure to obtain or maintain the insurance required of it in the Contract.

B. If one or more of the events identified in Paragraph 16.02.A occurs, then after giving Contractor (and any surety) 5 days' written notice that Owner is considering a declaration that Contractor is in default and termination of the Contract, Owner may proceed to:

1. declare Contractor to be in default, and give Contractor (and any surety) written notice that the Contract is terminated; and

2. enforce the rights available to Owner under any applicable performance bond.

C. Subject to the terms and operation of any applicable performance bond, if Owner has terminated the Contract for cause, Owner may exclude Contractor from the Site, take possession of the Work, incorporate in the Work all materials and equipment stored at the Site or for which Owner has paid Contractor but which are stored elsewhere, and complete the Work as Owner may deem expedient.

D. Owner may not proceed with termination of the Contract under Paragraph 16.02.B if Contractor within 5 days of receipt of notice of intent to terminate begins to correct its failure to perform and proceeds diligently to cure such failure.

E. If Owner proceeds as provided in Paragraph 16.02.B, Contractor shall not be entitled to receive any further payment until the Work is completed. If the unpaid balance of the Contract Price exceeds the cost to complete the Work, including all related claims, costs, losses, and damages (including but not limited to all fees and charges of engineers, architects, attorneys, and other professionals) sustained by Owner, such excess will be paid to Contractor. If the cost to complete the Work including such related claims, costs, losses, and damages exceeds such unpaid balance, Contractor shall pay the difference to Owner. When exercising any rights or remedies under this paragraph, Owner shall not be required to obtain the lowest price for the Work performed.

F. Where Contractor's services have been so terminated by Owner, the termination will not affect any rights or remedies of Owner against Contractor then existing or which may thereafter accrue, or any rights or remedies of Owner against Contractor or any surety under any payment bond or performance bond. Any retention or payment of money due Contractor by Owner will not release Contractor from liability.

G. If and to the extent that Contractor has provided a performance bond under the provisions of Paragraph 6.01.A, the provisions of that bond will govern over any inconsistent provisions of Paragraphs 16.02.B and 16.02.D.

16.03 *Owner May Terminate for Convenience*

A. Upon 5 days' written notice to Contractor and Engineer, Owner may, without cause and without prejudice to any other right or remedy of Owner, terminate the Contract. In such case, Contractor shall be paid for (without duplication of any items):

1. completed and acceptable Work executed in accordance with the Contract Documents prior to the effective date of termination, including fair and reasonable sums for overhead and profit on such Work;

Copyright© 2018 National Society of Professional Engineers, American Council of Engineering Companies, and American Society of Civil Engineers. All rights reserved.

2. expenses sustained prior to the effective date of termination in performing services and furnishing labor, materials, or equipment as required by the Contract Documents in connection with uncompleted Work, plus fair and reasonable sums for overhead and profit on such expenses; and

3. other reasonable expenses directly attributable to termination, such as demobilization expenses, and including costs incurred to prepare a termination for convenience cost proposal. Attorneys' fees, accountant fees, home office overhead and similar expenses shall not be deemed reasonable expenses.

B. Contractor shall not be paid for any loss of anticipated profits or revenue, post-termination overhead costs, or other economic loss arising out of or resulting from such termination.

16.04 *Contractor May Stop Work or Terminate*

A. If, through no act or fault of Contractor, (1) the Work is suspended for more than 90 consecutive days by Owner or under an order of court or other public authority, or (2) Engineer fails to act on any Application for Payment within 30 days after it is submitted, or (3) Owner fails for 30 days to pay Contractor any sum finally determined to be due, then Contractor may, upon 7 days' written notice to Owner and Engineer, and provided Owner or Engineer do not remedy such suspension or failure within that time, terminate the contract and recover from Owner payment on the same terms as provided in Paragraph 16.03. Contractor, however, cannot terminate the Contract due to any dispute (i) concerning the amount of payment due Contractor or (ii) any amounts Owner is withholding from Contractor.

B. In lieu of terminating the Contract and without prejudice to any other right or remedy, if Engineer has failed to act on an Application for Payment within 30 days after it is submitted, or Owner has failed for 30 days to pay Contractor any sum finally determined to be due, Contractor may, 7 days after written notice to Owner and Engineer, stop the Work until payment is made of all such amounts due Contractor, including interest thereon. The provisions of this paragraph are not intended to preclude Contractor from submitting a Change Proposal for an adjustment in Contract Price or Contract Times or otherwise for expenses or damage directly attributable to Contractor's stopping the Work as permitted by this paragraph. Contractor, however, cannot stop the Work due to any dispute (i) concerning the amount of payment due Contractor or (ii) any amounts Owner is withholding from Contractor.

DRAFT

Copyright© 2018 National Society of Professional Engineers, American Council of Engineering Companies, and American Society of Civil Engineers. All rights reserved.

ARTICLE 17—FINAL RESOLUTION OF DISPUTES

17.01 *Deleted in its entirety.*

A. Deleted in its entirety.

1. Deleted in its entirety.

2. Deleted in its entirety.

B. Deleted in its entirety.

1. Deleted in its entirety.

2. Deleted in its entirety.

3. Deleted in its entirety.

1. *Claims, disputes or other matters in question between the parties to this Agreement shall be first subject to pre-suit mediation prior to the filing of any legal claims or litigation. Completion of pre-suit mediation is a condition precedent to litigation. The obligation to mediate is a material and essential provision of the Agreement.*
2. *Unless otherwise agreed in writing, the Contractor shall carry on the Work and maintain its progress during any mediation or litigation, and the Owner shall continue to make payments to the Contractor in accordance with the Contract Documents.*
3. *Either party may initiate a mediation preceding by a request in writing to the other party within a reasonable time after the claim, dispute or other matter in question has arisen or as provided in subparagraph ___, but in no event after the expiration of the applicable statute of limitations.*
4. *The parties shall endeavor in good faith to mutually agree upon an acceptable mediator. In the event the parties have not agreed upon a mediator within thirty (30) days of the request for mediation, the Orlando office of the American Arbitration Association, upon the written request of either party, shall appoint a mediator from its pool of approved mediators.*
5. *Unless otherwise mutually agreed, the mediation shall be held in accordance with the Construction Industry Mediation Rules of the American Arbitration Association currently in effect, each party to bear its own fees, costs and expenses.*
6. *In the event that pre-suit mediation is unsuccessful, all claims, disputes or other matters in question shall be resolved in the Circuit Courts of Volusia County Florida. The Parties, including the*

DRAFT

Copyright© 2018 National Society of Professional Engineers, American Council of Engineering Companies, and American Society of Civil Engineers. All rights reserved.

Contractor's Surety, waive Venue and Jurisdiction of any Federal Court and expressly waive Trial by Jury.

ARTICLE 18—MISCELLANEOUS

18.01 *Giving Notice*

A. Whenever any provision of the Contract requires the giving of written notice to Owner, Engineer, or Contractor, it will be deemed to have been validly given only if delivered:

1. in person, by a commercial courier service or otherwise, to the recipient's place of business;

2. by registered or certified mail, postage prepaid, to the recipient's place of business; or

3. by e-mail to the recipient, with the words "Formal Notice" or similar in the e-mail's subject line.

18.02 *Computation of Times*

A. When any period of time is referred to in the Contract by days, it will be computed to exclude the first and include the last day of such period. If the last day of any such period falls on a Saturday or Sunday or on a day made a legal holiday by the law of the applicable jurisdiction, such day will be omitted from the computation.

18.03 *Cumulative Remedies*

A. The duties and obligations imposed by these General Conditions and the rights and remedies available hereunder to the parties hereto are in addition to, and are not to be construed in any way as a limitation of, any rights and remedies available to any or all of them which are otherwise imposed or available by Laws or Regulations, by special warranty or guarantee, or by other provisions of the Contract. The provisions of this paragraph will be as effective as if repeated specifically in the Contract Documents in connection with each particular duty, obligation, right, and remedy to which they apply.

18.04 *Limitation of Damages*

A. With respect to any and all Change Proposals, Claims, disputes subject to final resolution, and other matters at issue, neither Owner nor Engineer, nor any of their officers, directors, members, partners, employees, agents, consultants, or subcontractors, shall be liable to Contractor for any claims, costs, losses, or damages sustained by Contractor on or in connection with any other project or anticipated project.

18.05 *No Waiver*

A. A party's non-enforcement of any provision will not constitute a waiver of that provision, nor will it affect the enforceability of that provision or of the remainder of this Contract.

18.06 *Survival of Obligations*

A. All representations, indemnifications, warranties, and guarantees made in, required by, or given in accordance with the Contract, as well as all continuing obligations indicated in the

Copyright© 2018 National Society of Professional Engineers, American Council of Engineering Companies, and American Society of Civil Engineers. All rights reserved.

Contract, will survive final payment, completion, and acceptance of the Work or termination of the Contract or of the services of Contractor.

18.07 *Controlling Law*

A. This Contract is to be governed by the law of the State of Florida.

18.08 *Assignment of Contract*

A. Unless expressly agreed to elsewhere in the Contract, no assignment by a party to this Contract of any rights under or interests in the Contract will be binding on the other party without the written consent of the party sought to be bound; and, specifically but without limitation, money that may become due and money that is due may not be assigned without such consent (except to the extent that the effect of this restriction may be limited by law), and unless specifically stated to the contrary in any written consent to an assignment, no assignment will release or discharge the assignor from any duty or responsibility under the Contract.

18.09 *Successors and Assigns*

A. Owner and Contractor each binds itself, its successors, assigns, and legal representatives to the other party hereto, its successors, assigns, and legal representatives in respect to all covenants, agreements, and obligations contained in the Contract Documents.

18.10 *Headings*

A. Article and paragraph headings are inserted for convenience only and do not constitute parts of these General Conditions.

DRAFT

Copyright© 2018 National Society of Professional Engineers, American Council of Engineering Companies, and American Society of Civil Engineers. All rights reserved.

EXHIBIT 1 - SPECIFICATIONS

May 7, 2025
PREPARED BY: Forest W. Adkins
REVIEWED BY: Merlynn Anderson

SPECIFICATIONS PACKAGE
Contract Number: _____
FINANCIAL PROJECT ID(S).439865-3-54-01

DISTRICT FIVE
CITY OF PORT ORANGE, VOLUSIA COUNTY

The FY 2025-26 edition of the Construction Details and Materials divisions (Division II & III) of the Florida 5epartment of Transportation Standard Specifications for Road and Bridge Construction are revised, as follows:

I hereby certify that this specifications package has been properly prepared by me, or under my responsible charge, in accordance with procedures adopted by the Florida Department of Transportation.

This item has been digitally signed and sealed by Forest W. Adkins, P.E on the date adjacent to the seal. Printed copies of this document are not considered signed and sealed and the signature must be verified on any electronic copies.

Date:	05/07/2025
State of Florida,	
Professional Engineer, License No.:	56003
Firm Name:	Stanley Consultants, Inc.
Firm Address:	80 Spring Vista Drive
City, State, Zip Code:	Debary, Florida 32713
Page(s):	6

MODIFIED SPECIAL PROVISIONS 3

SCOPE OF WORK – INTENT OF CONTRACT..... 4
MAINTENANCE OF TRAFFIC..... 4
CONTRACTOR QUALITY CONTROL GENERAL REQUIREMENTS..... 5

THIS COMPLETES THIS SPECIFICATIONS PACKAGE 6

MODIFIED SPECIAL PROVISIONS

SCOPE OF WORK – INTENT OF CONTRACT.
(FY 2025-26)

SUBARTICLE 4-1 is expanded by the following:

The Improvements under this Contract consist of the construction of trail and lighting improvements to enhance safety, particularly at points of conflict such as roadway crossings. Minor drainage and utility adjustments and construction of a pedestrian bridge with associated gravity walls will also be included.

MAINTENANCE OF TRAFFIC.
(FY 2025-26) (5-25)

SUBARTICLE 102-3.2 is deleted and the following substituted:

102-3.2 Worksite Traffic Supervisor (WTS): Provide a WTS who is responsible for initiating, installing, and maintaining all temporary traffic control devices as described in this Section and the Contract Documents. Provide all equipment and materials needed to set up, take down, maintain traffic control, and handle traffic-related situations. ~~Provide the WTS or designee with a tablet or smartphone with internet access for recording information into the Department's lane closure notification system.~~ Use approved alternate WTS when necessary.

The WTS must meet the personnel qualifications specified in Section 105.

The WTS is to perform the following duties:

1. On site direction of all temporary traffic control on the project.
2. Is on site during all set up, and take down, and performs a drive through inspection immediately after set up. ~~During operations with lane closures, the WTS or on-site designee shall record lane closure information into the Department's lane closure notification system in accordance with 102-3.3.~~
3. Is on site during all nighttime operations ensuring proper temporary traffic control.
4. Immediately corrects all safety deficiencies and corrects minor deficiencies that are not immediate safety hazards within 24 hours.
5. Is available on a 24 hour per day basis and present at the site within 45 minutes after notification of an emergency situation and is prepared to respond to maintain temporary traffic control or to provide alternate traffic arrangements.
6. Conducts daily daytime and weekly nighttime inspections of projects with predominately daytime work activities, and daily nighttime and weekly daytime inspections of projects with predominantly nighttime work activities of all traffic control devices, traffic flow, pedestrian, bicyclist, and business accommodations.

Advise the project personnel of the schedule of these inspections and give them the opportunity to join in the inspection as deemed necessary. The Department may disqualify and remove from the project a WTS who fails to comply with the provisions of this Section.

The Department may temporarily suspend all activities, except traffic, erosion control and such other activities that are necessary for project maintenance and safety, for failure to comply with these provisions.

SUBARTICLE 102-3.3 is deleted and the following substituted:

102-3.3 Lane Closures: Approval for all lane closures, mobile operations, and traffic pacing operations is required. Submit routine requests to the Engineer 14 calendar days in advance of planned lane closures, mobile operations, and traffic pacing operations. ~~Requests for planned lane closures are to be submitted through the Department's Lane Closure Notification System (LCNS).~~ For unforeseen events that require cancelling or rescheduling lane closures, mobile operations, and traffic pacing operations, revise the lane closure request as soon as possible.

~~Record information for lane closures, including but not limited to begin and end lane closure times and locations, into the Department's LCNS. Lane closures are to be activated in the Department's LCNS within five minutes of placing the first channelizing device and deactivated within 5 minutes removing the last channelizing device associated with the closure.~~

~~At the preconstruction conference, submit a request for access to the Department's LCNS to the Engineer. Include the name, email address, level of access required, and a copy of the individual's certification of training for Contractor personnel requiring access to the Department's LCNS. For change of access requests, submit a request to the Engineer at least ten calendar days in advance of when the change is needed.~~

102-3.3.1 Traffic Pacing: In addition to dates and locations, include a pacing plan outlining the expected equipment and number of traffic control officers required, the proposed traffic pacing lengths and durations, the available existing egresses in the event of an emergency, and a contingency plan in the event of an equipment failure.

CONTRACTOR QUALITY CONTROL GENERAL REQUIREMENTS.
(FY 2025-26) (5-25)

SUBARTICLE 105-1.1.2 is deleted and the following substituted:

Test data shall not be required to be entered into any FDOT and/or City of Port Orange databases.

THIS COMPLETES THIS SPECIFICATIONS PACKAGE

EXHIBIT 2 - ENVIRONMENTAL PERMITS

DEPARTMENT OF THE ARMY
U.S. ARMY CORPS OF ENGINEERS, JACKSONVILLE DISTRICT
COCOA PERMITS SECTION
400 HIGH POINT DRIVE, SUITE 600
COCOA FLORIDA 32926

March 19, 2025

South Atlantic Division
Regulatory Technical
Regional Execution Center
SAJ-2024-02331 (NW–TCP)

Valerie Duhl
Community Development Engineer
City of Port Orange
1000 City Center Circle
Port Orange, FL 32129
Via Email: vduhl@port-orange.org

Dear Ms. Duhl:

This letter is in response to the Pre-Construction Notification (PCN) you submitted to the Jacksonville District, Technical Regional Execution Center on July 3, 2024 for a Department of the Army Nationwide permit (NWP) verification. This project has been assigned the file number SAJ-2024-02331 (NW–TCP) and is known as Sun Trail SJR2C Loop Trail. This file number should be referenced in all correspondence concerning this project.

A review of the information provided indicates that the proposed work would include temporary impacts to 0.486 acres of forested wetlands to facilitate the construction of an 8-foot-wide by 695-foot-long elevated walkway through the wetlands and 103 square feet of impacts to Halifax Canal for the installation of a stormwater outlet. The proposed work in waters is part of a larger overall project consisting of improvements to the St. Johns River to Sea Loop Trail, an existing pedestrian trail system. The portion of the project involving work in waters begins near the corner of Canal View Boulevard and Spruce Creek Road at Latitude 29.140975 and Longitude -80.998367 and ends near the intersection of Herbert Street and 6th Street at Latitude 29.143001 and Longitude -80.998897, within Section 04, Township 016S, Range 033E; in Port Orange, Volusia County, Florida.

We have determined that the proposed work is authorized by Nationwide Permit 14 Linear Transportation Projects pursuant to authorities under Section 404 of the Clean Water Act (33 U.S.C. § 1344). The proposed work must be accomplished in strict accordance with the general permit conditions, any regional conditions, the special conditions listed in this letter, the application materials, and the enclosed plans labelled “City of Port Orange c/o Valerie Duhl SAJ-2024-02331”. If the extent of the project area

and/or nature of the authorized impacts to waters are modified, a revised PCN must be submitted to this office for written approval before work is initiated. Any violation of permit conditions or deviation from your submitted plans may subject the permittee to enforcement action.

This verification is valid until March 14, 2026, unless prior to this date the subject NWP(s) is suspended, revoked, or is modified such that the activity no longer complies with the terms and conditions of this NWP. If you commence or are under contract to commence this activity before the date that the relevant NWP is modified or revoked, you will have 12 months from the date of the modification or revocation of the NWP to complete the activity under the present terms and conditions of this NWP. You can access the U.S. Army Corps of Engineers' (Corps) Jacksonville District's Regulatory Source Book webpage for links to view NWP information at: https://www.saj.usace.army.mil/Missions/Regulatory/Source-Book/.
Please be aware this Internet address is case sensitive and should be entered as it appears above. Once there, you will need to select "Nationwide Permits." Among other things, this part of the Source Book contains links to the federal register containing the text of the pertinent NWP authorization and the associated NWP general conditions, as well as separate links to the regional conditions applicable to the pertinent NWP verification.

Project Specific Special Conditions:

1. **Reporting Address:** The Permittee shall submit all reports, notifications, documentation, and correspondence required by the general and special conditions of this permit to either (not both) of the following addresses:

   a. For electronic mail (preferred): SAJ-RD-Enforcement@usace.army.mil (not to exceed 15 MB).

   b. For standard mail: U.S. Army Corps of Engineers, Regulatory Division, Enforcement Section, P.O. Box 4970, Jacksonville, FL 32232-0019.

   The Permittee shall reference this permit number, SAJ-2024-02331 (NW–TCP), on all submittals.

2. **Permit Conditions Prevail:** If information in the permit attachments conflict with the special conditions of this permit, the requirements of the permit special conditions shall prevail.

3. **Posting of Permit:** The Permittee shall have available and maintain for review a copy of this permit and approved plans at the construction site.

4. **Self-Certification:** Within 60 days of completion of the work authorized by this permit, the Permittee shall complete the ENG Form 6285, "Certification of Compliance with Department of Army Permit" (located

at https://www.publications.usace.army.mil/Portals/76/Eng_Form_6285_2024%20Dec%20FINAL.pdf) and submit it to the Corps.

5. **Cultural Resources/Historic Properties:**

   a. No structure or work shall adversely affect, impact, or disturb properties listed in the *National Register of Historic Places* (NRHP), or those eligible for inclusion in the NRHP.

   b. If, during the ground disturbing activities and construction work within the permit area, there are archaeological/cultural materials encountered which were not the subject of a previous cultural resources assessment survey (and which shall include, but not be limited to: pottery, modified shell, human remains, ceramics, stone tools or metal implements, dugout canoes, evidence of structures or any other physical remains that could be associated with native cultures or early colonial settlement), the Permittee shall immediately stop all work and ground-disturbing activities within a 100-meter diameter of the discovery and notify the Corps at the addresses listed in the **Reporting Address Special Condition** within the same business day (8 hours). The Corps shall coordinate with the Florida State Historic Preservation Officer (SHPO) to assess the significance of the discovery and devise appropriate actions.

   c. Additional cultural resources assessments may be required of the permit area in the case of unanticipated discoveries as referenced in accordance with the above Special Condition and, if deemed necessary by the SHPO or Corps, in accordance with 36 CFR 800 or 33 CFR 325, Appendix C (5). Based on the circumstances of the discovery, equity to all parties, and considerations of the public interest, the Corps may modify, suspend, or revoke the permit in accordance with 33 CFR Part 325.7. Such activity shall not resume on non-federal lands without written authorization from the SHPO for finds under his or her jurisdiction, and from the Corps.

   d. In the unlikely event that unmarked human remains are identified on non-federal lands; they will be treated in accordance with Section 872.05 Florida Statutes. All work and ground disturbing activities within a 100-meter diameter of the unmarked human remains shall immediately cease, and the Permittee shall immediately notify the medical examiner, Corps, and State Archaeologist within the same business day (8-hours). The Corps shall then notify the appropriate SHPO. Based on the circumstances of the discovery, equity to all parties, and considerations of the public interest, the Corps may modify, suspend, or revoke the permit in accordance with 33 CFR Part 325.7. Such activity shall not resume without written authorization from the SHPO and from the Corps.

6. **Proposed Species/Critical Habitat:** The action falls within the range for the monarch butterfly and the tricolored bat, which are proposed to be federally listed under the Endangered Species Act. If either of these species becomes federally listed and the authorized work has not been completed, the Permittee is required to stop work and ask the Corps to re-evaluate the effects of the permitted action on the species, and if needed, complete Section 7 consultation with the U.S. Fish and Wildlife Service to address potential impacts to the species.

This letter of authorization does not include conditions that would prevent the 'take' of a state-listed fish or wildlife species. These species are protected under sec. 379.411, Florida Statutes, and listed under Rule 68A-27, Florida Administrative Code. With regard to fish and wildlife species designated as species of special concern or threatened by the State of Florida, you are responsible for coordinating directly with the Florida Fish and Wildlife Conservation Commission (FWC). You can visit the FWC license and permitting webpage (http://www.myfwc.com/license/wildlife/) for more information, including a list of those fish and wildlife species designated as species of special concern or threatened. The Florida Natural Areas Inventory (http://www.fnai.org/) also maintains updated lists, by county, of documented occurrences of those species.

This letter of authorization does not give absolute Federal authority to perform the work as specified on your application. The proposed work may be subject to local building restrictions mandated by the National Flood Insurance Program. You should contact your local office that issues building permits to determine if your site is located in a flood-prone area, and if you must comply with the local building requirements mandated by the National Flood Insurance Program.

This NWP verification does not preclude the necessity to obtain any other Federal, State, or local permits, licenses, and/or certifications, which may be required.

If you have any questions related to this verification or have issues accessing documents referenced in this letter, please contact Taylor Parks, none of the Technical Regional Execution Center at 904-676-0634, by mail at the above address, or by email at taylor.c.parks@usace.army.mil. Please take a moment to complete our customer satisfaction survey located at https://regulatory.ops.usace.army.mil/customer-service-survey/.

Sincerely,



Taylor Parks
Biologist

Enclosures

Cc (w/enclosures)
Brennan Hagan, Terracon Consultants, Inc. (via brennan.hagan@terracon.com)

General Conditions (33 CFR PART 320-330):

1. The time limit for completing the work authorized ends on **March 14, 2026.**

2. You must maintain the activity authorized by this permit in good condition and in conformance with the terms and conditions of this permit. You are not relieved of this requirement if you abandon the permitted activity, although you may make a good faith transfer to a third party in compliance with General Condition 4 below. Should you wish to cease to maintain the authorized activity, or should you desire to abandon it without a good faith transfer, you must obtain a modification of this permit from this office, which may require restoration of the area.

3. If you discover any previously unknown historic or archeological remains while accomplishing the activity authorized by this permit, you must immediately notify this office of what you have found. We will initiate the Federal and state coordination required to determine if the remains warrant a recovery effort of if the site is eligible for listing in the National Register of Historic Places.

4. If you sell the property associated with this permit you must obtain the signature of the new owner on the transfer form attached to this letter and forward a copy to this office to validate the transfer of this authorization.

5. You must allow a representative from this office to inspect the authorized activity at any time deemed necessary to ensure that it is being or has been accomplished in accordance with the terms and conditions of your permit.

Compliance Certification Form

File Number: SAJ-2024-02331 (NW–TCP) **County: Volusia**

Permittee: City of Port Orange, Valerie Duhl

Project Name: Sun Trail SJR2C Loop Trail

Date Verification Issued: 3/19/2025

Project Manager: Taylor Parks

Within 60 days of completion of the activity authorized by this permit and any mitigation required by the permit, sign this certification and return it to the following address:

US ARMY CORPS OF ENGINEERS
Jacksonville District
Enforcement Section
P.O. Box 4970
Jacksonville, FL 32232-0019
or
saj-rd-enforcement@usace.army.mil (preferred)

Please note that your permitted activity is subject to a compliance inspection by a U. S. Army Corps of Engineers representative. Failure to comply with any terms or conditions of this authorization may result in the Corps suspending, modifying or revoking the authorization and/or issuing a Class I administrative penalty, or initiating other appropriate legal action.

I hereby certify that the work, and mitigation (if applicable), authorized by the above referenced permit has been completed in accordance with the terms and conditions of the said permit including any general or specific conditions.

Date Authorized Work Started: _____ **Completed: _____**

Describe any deviations from permit (attach drawing(s) depicting the deviations):

_____

_____

***Note: The description of any deviations on this form does not constitute approval by the Corps.**

_____ _____

Signature of Permittee **Date**

DEPARTMENT OF THE ARMY PERMIT TRANSFER REQUEST

DA PERMIT NUMBER: SAJ-2024-02331 (NW–TCP)

When the structures or work authorized by this permit are still in existence at the time the property is transferred, the terms and conditions of this permit will continue to be binding on the new owner(s) of the property. Although the construction period for works authorized by Department of the Army permits is finite, the permit itself, with its limitations, does not expire.

To validate the transfer of this permit and the associated responsibilities associated with compliance with its terms and conditions, have the transferee sign and date below and mail to the U.S. Army Corps of Engineers, Enforcement Section, Post Office Box 4970, Jacksonville, FL 32232-0019 or submit via electronic mail to: SAJ-RD-Enforcement@usace.army.mil (not to exceed 15 MB).

_____
(TRANSFEREE-SIGNATURE)

_____
(DATE)

_____
(NAME-PRINTED)

_____

_____
(MAILING ADDRESS)

_____
(CITY, STATE, ZIP CODE)

_____
(SUBDIVISION)

_____ _____
(LOT) **(BLOCK)**

_____
(STREET ADDRESS)



Project No.:	H1217592
Date:	Sep 2023
Drawn By:	GRS
Reviewed By:	BH

Terracon
1675 Lee Road Winter Park, FL 32789
PH. (407) 740-6110 terracon.com

Project Boundary

Environmental Resource Permit
SJR2C Loop Trail (Spruce Creek Road)
Volusia County, Florida

Exhibit

1

City of Port Orange c/o Valerie Duhl SAJ-2024-02331 (Sheet 1 of 11)

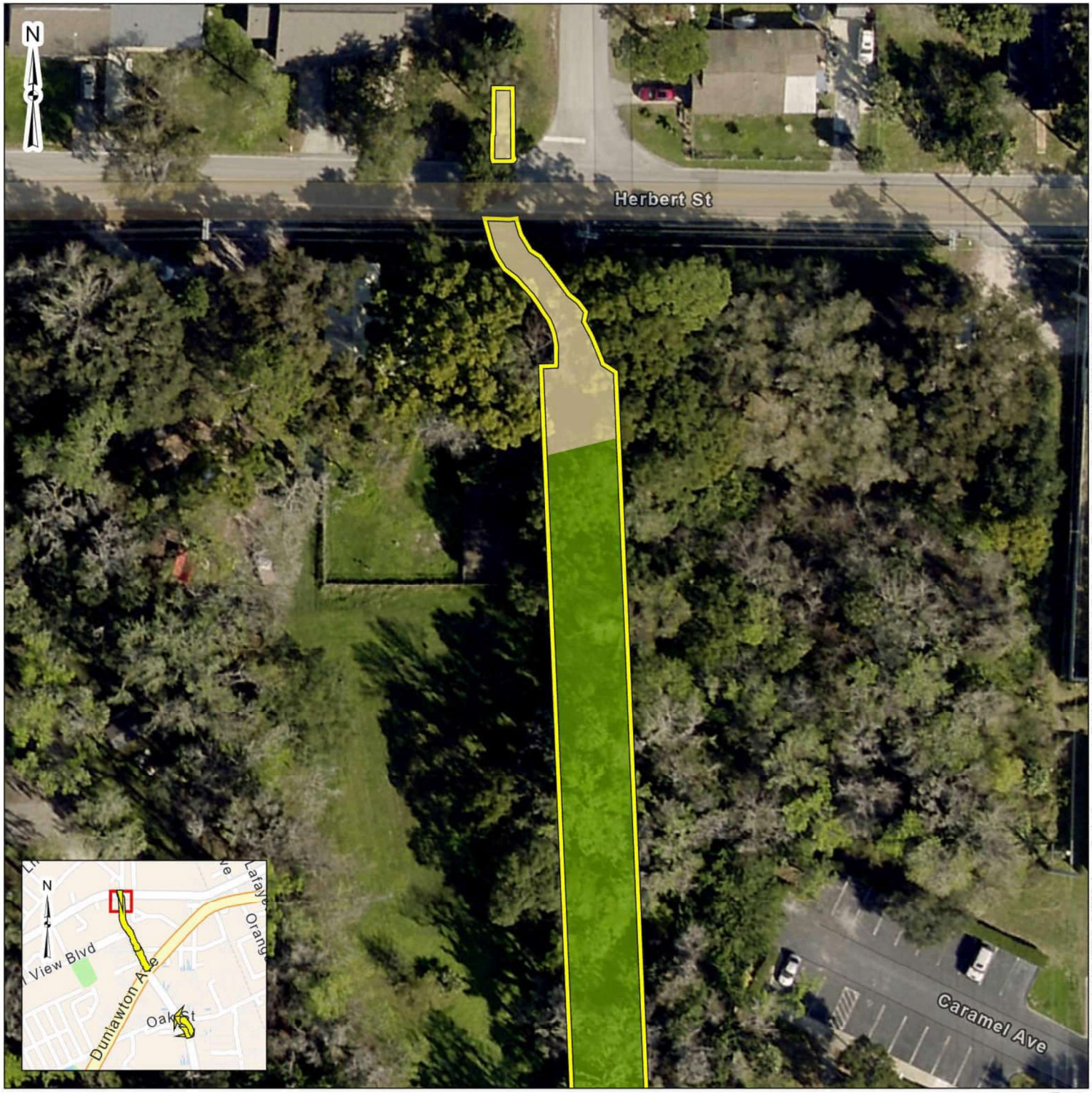

Project Areas (Construction Limits) (1.42 ac.±)
Uplands (0.92 ac.±)
Wetlands (0.49 ac.±)
Other Surface Water (0.01 ac.±)

Feet
0 30 60 120

DATA SOURCES:
Terracon - Wetland Delineation; ESRI World Imagery Basemap & World Navigation Map

C:\GIS\Projects\H1217592_SJR2C_Loop_Trail_(Spruce_Creek_Rd)\Maps\H1217592_SJR2C_Loop_Trail_(Spruce_Creek_Rd)\H1217592_SJR2C_Loop_Trail_(ERPsubmittal).aprx

Project No.:	H1217592
Date:	Sep 2023
Drawn By:	GRS
Reviewed By:	BH

Terracon
1675 Lee Road Winter Park, FL 32789
PH. (407) 740-6110 terracon.com

Wetland Delineation

Environmental Resource Permit
SJR2C Loop Trail (Spruce Creek Road)
Volusia County, Florida

Exhibit

7.1

City of Port Orange c/o Valerie Duhl SAJ-2024-02331 (Sheet 2 of 11)



Project Areas (Construction Limits) (1.42 ac.±)
Uplands (0.92 ac.±)
Wetlands (0.49 ac.±)
Other Surface Water (0.01 ac.±)

Feet
0 30 60 120

DATA SOURCES:
Terracon - Wetland Delineation; ESRI World Imagery Basemap & World Navigation Map

C:\GIS\Projects\H1217592_SJR2C_Loop_Trail_(Spruce_Creek_Rd)\Maps\H1217592_SJR2C_Loop_Trail_(Spruce_Creek_Rd)H1217592_SJR2C_Loop_Trail_(ERPSubmittal).aprx

Project No.: H1217592 Date: Sep 2023 Drawn By: GRS Reviewed By: BH	Terracon 1675 Lee Road Winter Park, FL 32789 PH. (407) 740-6110 terracon.com	**Wetland Delineation** Environmental Resource Permit SJR2C Loop Trail (Spruce Creek Road) Volusia County, Florida	**Exhibit** **7.2**

City of Port Orange c/o Valerie Duhl SAJ-2024-02331 (Sheet 3 of 11)

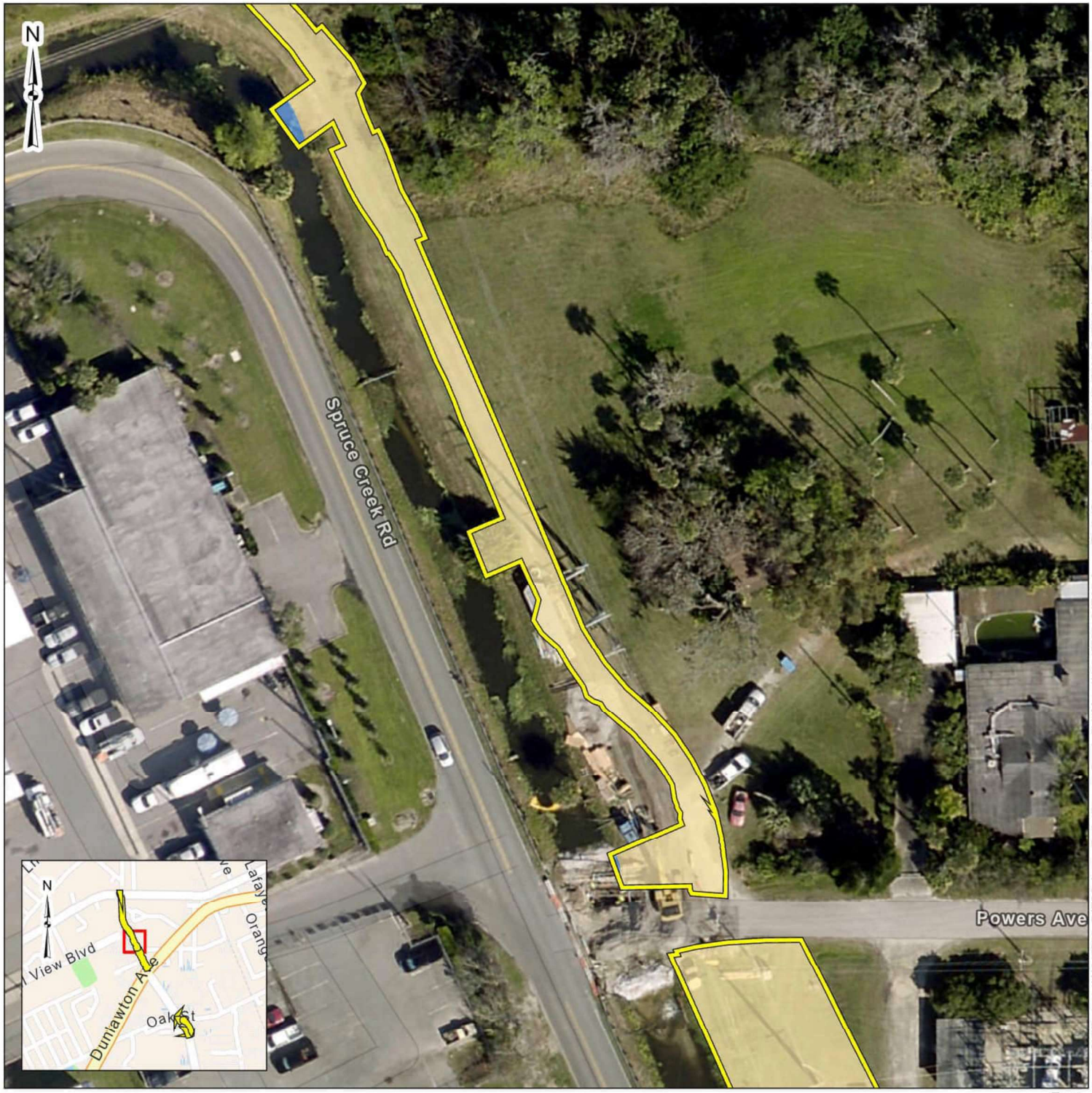

Project Areas (Construction Limits) (1.42 ac.±)
Uplands (0.92 ac.±)
Wetlands (0.49 ac.±)
Other Surface Water (0.01 ac.±)

Feet
0 30 60 120

DATA SOURCES:
Terracon - Wetland Delineation; ESRI World Imagery Basemap & World Navigation Map

C:\GIS\Projects\H1217592_SJR2C_Loop_Trail_(Spruce_Creek_Rd)\Maps\H1217592_SJR2C_Loop_Trail_(Spruce_Creek_Rd)H1217592_SJR2C_Loop_Trail_(ERPsubmittal).aprx

Project No.: H1217592 Date: Sep 2023 Drawn By: GRS Reviewed By: BH	Terracon 1675 Lee Road Winter Park, FL 32789 PH. (407) 740-6110 terracon.com	**Wetland Delineation** Environmental Resource Permit SJR2C Loop Trail (Spruce Creek Road) Volusia County, Florida	**Exhibit** **7.3**

City of Port Orange c/o Valerie Duhl SAJ-2024-02331 (Sheet 4 of 11)

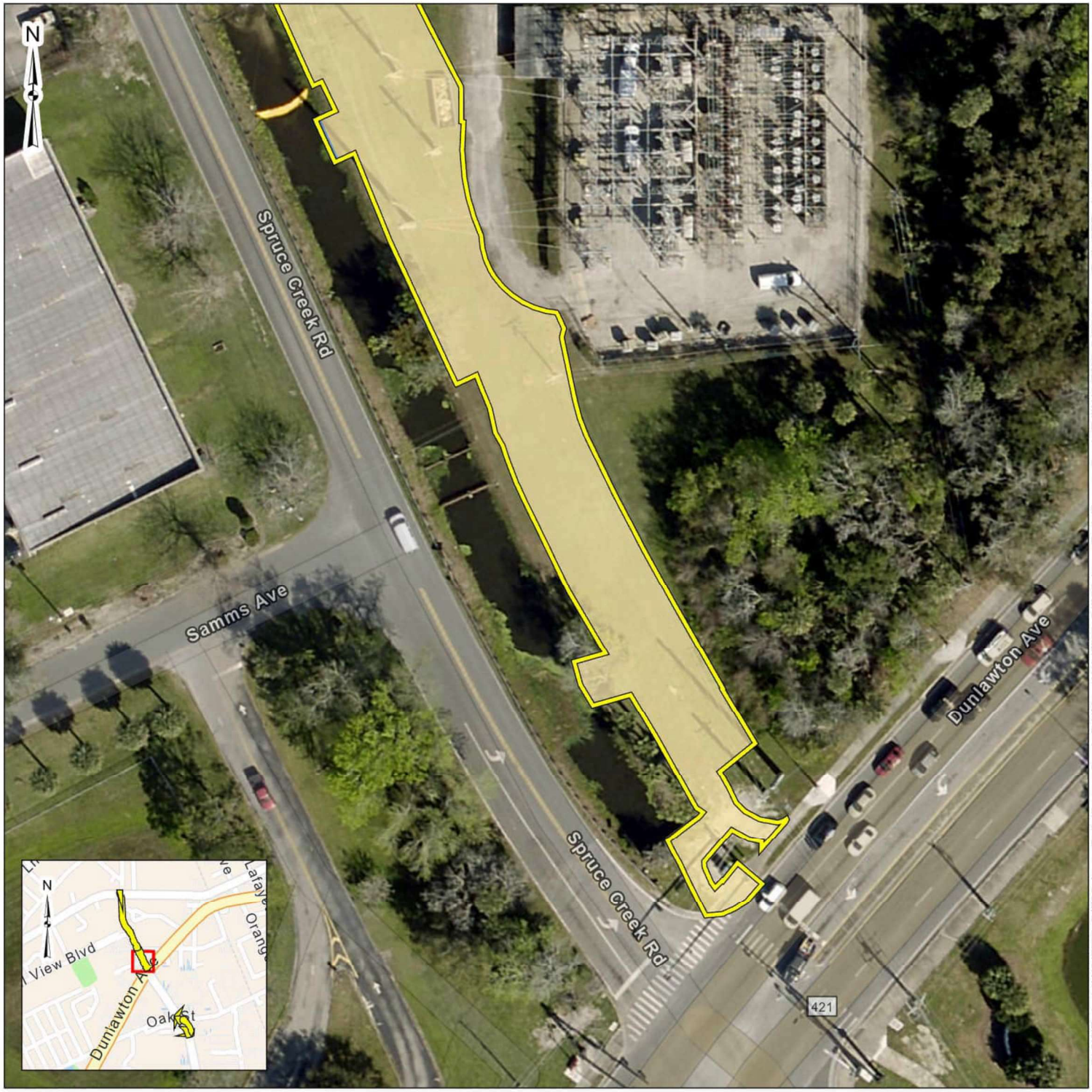

Project Areas (Construction Limits) (1.42 ac.±)
Uplands (0.92 ac.±)
Wetlands (0.49 ac.±)
Other Surface Water (0.01 ac.±)

Feet
0 30 60 120

DATA SOURCES:
Terracon - Wetland Delineation; ESRI World Imagery Basemap & World Navigation Map

C:\GIS\Projects\H1217592_SJR2C_Loop_Trail_(Spruce_Creek_Rd)\Maps\H1217592_SJR2C_Loop_Trail_(Spruce_Creek_Rd)H1217592_SJR2C_Loop_Trail_(ERPsubmittal).aprx

Project No.:	H1217592
Date:	Sep 2023
Drawn By:	GRS
Reviewed By:	BH

Terracon
1675 Lee Road Winter Park, FL 32789
PH. (407) 740-6110 terracon.com

Wetland Delineation

Environmental Resource Permit
SJR2C Loop Trail (Spruce Creek Road)
Volusia County, Florida

Exhibit

7.4

City of Port Orange c/o Valerie Duhl SAJ-2024-02331 (Sheet 5 of 11)



Project Areas (Construction Limits) (1.42 ac.±)
Uplands (0.92 ac.±)
Wetlands (0.49 ac.±)
Other Surface Water (0.01 ac.±)

Feet
0 30 60 120

DATA SOURCES:
Terracon - Wetland Delineation; ESRI World Imagery Basemap & World Navigation Map

C:\GIS\Projects\H1217592_SJR2C_Loop_Trail_(Spruce_Creek_Rd)\Maps\H1217592_SJR2C_Loop_Trail_(Spruce_Creek_Rd)H1217592_SJR2C_Loop_Trail_(ERPSubmittal).aprx

Project No.: H1217592 Date: Sep 2023 Drawn By: GRS Reviewed By: BH	Terracon 1675 Lee Road Winter Park, FL 32789 PH. (407) 740-6110 terracon.com	**Wetland Delineation** Environmental Resource Permit SJR2C Loop Trail (Spruce Creek Road) Volusia County, Florida	**Exhibit** **7.5**

City of Port Orange c/o Valerie Duhl SAJ-2024-02331 (Sheet 6 of 11)

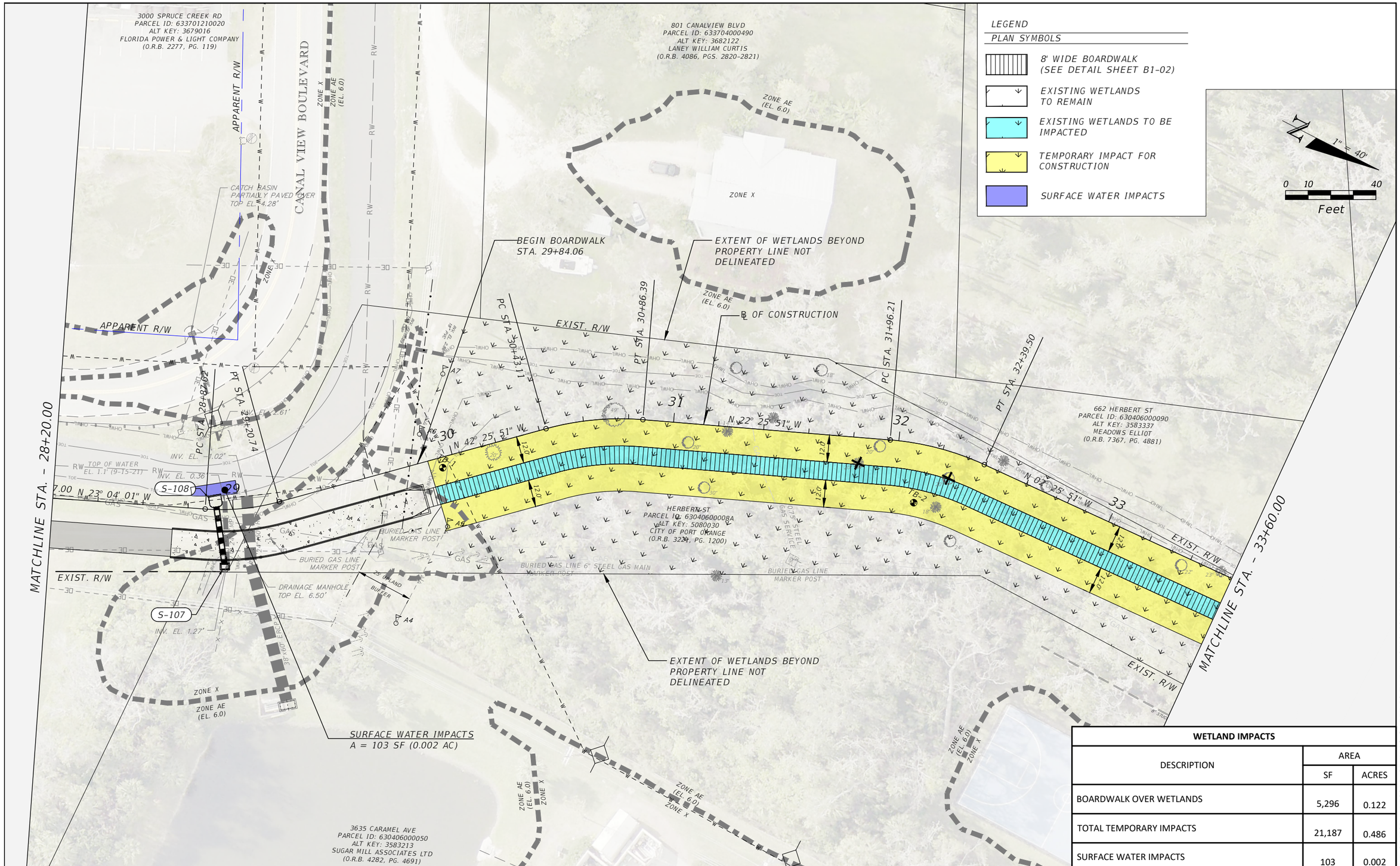

WETLAND IMPACTS		
DESCRIPTION	AREA	
	SF	ACRES
BOARDWALK OVER WETLANDS	5,296	0.122
TOTAL TEMPORARY IMPACTS	21,187	0.486
SURFACE WATER IMPACTS	103	0.002

THE OFFICIAL RECORD OF THIS SHEET IS THE ELECTRONIC FILE DIGITALLY SIGNED AND SEALED UNDER RULE 61G15-23.004, F.A.C.

REVISIONS	
DATE	DESCRIPTION

CITY OF PORT ORANGE
1000 CITY CENTER CIRCLE
PORT ORANGE, FL 32129

MERLYNN O. ANDERSON, P.E.
P.E. LICENSE NUMBER 83096

STANLEY CONSULTANTS, INC.
80 SPRING VISTA DRIVE
DEBARY, FL 32713

SJR2C LOOP TRAIL
FROM SOUTH OF SELIN CIR TO HERBERT ST

ROAD	COUNTY	FINANCIAL PROJECT ID
SPRUCE CREEK RD	VOLUSIA	439865-3-54-01

WETLAND IMPACTS

SHEET NO. 47

City of Port Orange c/o Valerie Duhl SA1-2024-02331 (Sheet 7 of 11)

O'Neill, Karen 2/13/2025 12:52:14 PM Z:\2016 Projects\10962 (Port Orange)\TWO 09 - SUNTrail (SJR2C Loop) Spruce Creek Rd\CAD\439865\Roadway\WETLAND IMPACTS_USACE.dwg

LEGEND

PLAN SYMBOLS

8' WIDE BOARDWALK (SEE DETAIL SHEET B1-02)

EXISTING WETLANDS TO REMAIN

EXISTING WETLANDS TO BE IMPACTED

TEMPORARY IMPACT FOR CONSTRUCTION

MATCHLINE STA. - 33+60.00

662 HERBERT ST
PARCEL ID: 630406000090
ALT KEY: 3583337
MEADOWS ELLIOT
(O.R.B. 7367, PG. 4881)

EXTENT OF WETLANDS BEYOND PROPERTY LINE NOT DELINEATED

℄ OF CONSTRUCTION

6TH ST
PARCEL ID: 630406000091
ALT KEY: 5578518
CITY OF PORT ORANGE
(O.R.B. 4060, PGS. 2312-2313)

END BOARDWALK
STA. 36+79.20

ZONE AE (EL. 6.0)

ZONE X

STA. 37+74.25 ℄ CONSTRUCTION =
STA. 4+89.39 ℄ HERBERT ST.

APPARENT R/W

HERBERT STREET

EXIST. R/W

SANITARY MANHOLE
TOP EL. 8.70'

℄ OF SIXTH ST.

8' CONC. SIDEWALK

N 02° 25' 51"W

EXIST. R/W

120'

120'

TB-3

HERBERT ST
PARCEL ID: 630406000008A
ALT KEY: 5080030
CITY OF PORT ORANGE
(O.R.B. 3221, PG. 1200)

25' UPLAND BUFFER

EXIST. R/W

TB-4

BURIED GAS LINE MARKER POST

BURIED GAS LINE MARKER POST

STA. 5+11.76 ℄ HERBERT ST. =
STA. 10+00.00 ℄ SIXTH ST.

6TH STREET

EXTENT OF WETLANDS BEYOND PROPERTY LINE NOT DELINEATED

3635 CARAMEL AVE
PARCEL ID: 630406000050
ALT KEY: 3583213
SUGAR MILL ASSOCIATES LTD
(O.R.B. 4282, PG. 4691)

ZONE AE (EL. 6.0)

ZONE X

654 HERBERT ST
PARCEL ID: 630406000080
ALT KEY: 3583329
KEPPER EILEEN A
(O.R.B. 4849, PGS. 2487-2488)

APPARENT R/W

657 HERBERT ST
PARCEL ID: 630409000530
ALT KEY: 4797769
FRAZIER SHAWN FRAIZER JARED
(O.R.B. 3394, PG. 166)

655 HERBERT ST
PARCEL ID: 630409000540
ALT KEY: 4797777
GN & TN LLC
(O.R.B. 6611, PG. 3648)

653 HERBERT ST
PARCEL ID: 630409000550
ALT KEY: 4797785
GN & TN LLC
(O.R.B. 6913, PG. 2839)

626 6TH ST
PARCEL ID: 630402190110
ALT KEY: 3582683
GENSLER BRENDA A
(O.R.B. 7575, PG. 2143)

1" = 40'

0 10 40
Feet

WETLAND IMPACTS

DESCRIPTION	AREA	
	SF	ACRES
BOARDWALK OVER WETLANDS	5,296	0.122
TOTAL TEMPORARY IMPACTS	21,187	0.486
SURFACE WATER IMPACTS	103	0.002

THE OFFICIAL RECORD OF THIS SHEET IS THE ELECTRONIC FILE DIGITALLY SIGNED AND SEALED UNDER RULE 61G15-23.004, F.A.C.

REVISIONS	
DATE	DESCRIPTION

CITY OF PORT ORANGE
1000 CITY CENTER CIRCLE
PORT ORANGE, FL 32129

MERLYNN O. ANDERSON, P.E.
P.E. LICENSE NUMBER 83096

STANLEY CONSULTANTS, INC.
80 SPRING VISTA DRIVE
DEBARY, FL 32713

SJR2C LOOP TRAIL
FROM SOUTH OF SELIN CIR TO HERBERT ST

ROAD	COUNTY	FINANCIAL PROJECT ID
SPRUCE CREEK RD	VOLUSIA	439865-3-54-01

WETLAND IMPACTS

SHEET NO. 48

City of Port Orange c/o Valerie Duhl SAJ-2024-02331 (Sheet 8 of 11)

O'Neill, Karen 2/13/2025 12:52:25 PM Z:\2016 Projects\10962 (Port Orange)\TWO 09 - SUNTrail (SJR2C Loop) Spruce Creek Rd\CAD\439865\Roadway\WETLAND IMPACTS_USACE.dwg

CURVE DATA ℄ CONSTRUCTION (C3)
PI STA. = 29+04.34
DELTA = 19° 21' 50"
D = 58° 27' 54"
T = 16.72
L = 33.12
R = 98.00
PC STA. = 28+87.62
PT STA. = 29+20.74

CURVE DATA ℄ CONSTRUCTION (C4)
PI STA. = 30+64.97
DELTA = 20° 00' 00"
D = 46° 12' 23"
T = 21.86
L = 43.28
R = 124.00
PC STA. = 30+43.11
PT STA. = 30+86.39

CONTRACTOR TO NOTIFY TECO GAS PRIOR TO ANY WORK NEAR EXISTING GAS MAINS AND SERVICE LINES

CURVE DATA ℄ CONSTRUCTION (C5)
PI STA. = 32+18.08
DELTA = 20° 00' 00"
D = 46° 12' 23"
T = 21.86
L = 43.28
R = 124.00
PC STA. = 31+96.21
PT STA. = 32+39.50

℄ CONSTRUCTION
EXIST. 0.75" GAS SERVICE LINE (APPROX. DEPTH 21")
EXIST. R/W
APPARENT R/W
CANAL VIEW BLVD.
CONST. 12' SIDEWALK
CONST. 12' HEAVY DUTY ASPHALT SUP
SPRUCE CREEK ROAD
PI STA. 27+20.00
PC STA. 28+87.62
PT STA. 29+20.74
PC STA. 30+43.11
PT STA. 30+86.39
PC STA. 31+96.21
PT STA. 32+39.50
N 22° 25' 51" W
N 42° 25' 51" W
N 02° 25' 51" W
MATCHLINE STA. - 33+20.00
1" = 40'
N

28+87.62
10.00 RT.
28+73.70
10.00 RT.
28
PI STA. 27+67.00
28+33.70
10.00 RT.
29+20.74
10.00 RT.
29+75.37
9.67 RT.
BEGIN BOARDWALK
STA. 29+84.06
29+63.40
10.00 RT.
29
30
31
32
33
C3
C4
C5
R108'
A4
A5
A6
18-1
18-2

BENT No 12
STA. 30+75.57
BENT No. 1
STA. 29+84.89
BENT No. 7
STA. 30+43.11
BENT No. 6
STA. 30+34.89
BENT No. 11
STA. 30+86.39
BENT No. 22
STA. 31+96.21
BENT No. 21
STA. 31+86.39
BENT No. 23
STA. 32+07.03
BENT No. 24
STA. 32+17.86
BENT No. 25
STA. 32+28.68
BENT No. 26
STA. 32+39.50
BENT No. 27
STA. 32+48.37
BENT No. 28
STA. 32+58.37

END RAILING
29+84.06
12.00 RT.
END RAILING
29+84.06
20.00 RT.
29+75.37
22.33 RT.

TREE REMOVAL (TYP.)
662 HERBERT ST
PARCEL ID: 630406000090
ALT KEY: 3583337
MEADOWS ELLIOT
(O.R.B. 7367, PG. 4881)
HERBERT ST
PARCEL ID: 63040600008A
ALT KEY: 5080030
CITY OF PORT ORANGE
(O.R.B. 3221, PG. 1200)
0.75" STEEL GAS SERVICE LINE
GAS LINE 6" STEEL GAS MAIN
BURIED GAS LINE MARKER POST
DRAINAGE MANHOLE TOP EL. 6.50'
25' UPLAND BUFFER
TOP OF WATER EL. 1.19
INV. EL. 0.36
MAX EL. 0.36
TBM 1383
EL. 5.215'
SET IRC
TRAV PT LB 7808
40' CROSS SLOPE TRANSITION (2.0% to 0.0%)
REMOVE 27 LF OF EXSIT. PIPE AND CONST. 29LF 24" PIPE @0.00%
S-107
STA 28+95.94 (25.25 Rt.)
CONST. INLET TYPE C
INDEX No. 425-052
FL 0.36 (24")
ADJUST MANHOLE TO FINISHED GRADE
S-108
STA 28+92.24 (-2.98 Lt.)
CONST. CD MES (1:2)
INDEX No. 430-021
FL 0.36 (24")
CONST. GRAVITY WALL A, SCHEME 1, WITH ALUMINUM PIPE GUIDERAIL
-2.00%
0.00%
ZONE AE (EL. 6.0)
ZONE X

LEGEND

PLAN SYMBOLS

4" THICK CONCRETE SIDEWALK (PER FDOT INDEX 522-001)

HEAVY DUTY ASPHALT SHARED USE PATH (SUP) (SEE DETAIL SHEET 11)

8' WIDE BOARDWALK (SEE DETAIL SHEET B1-02)

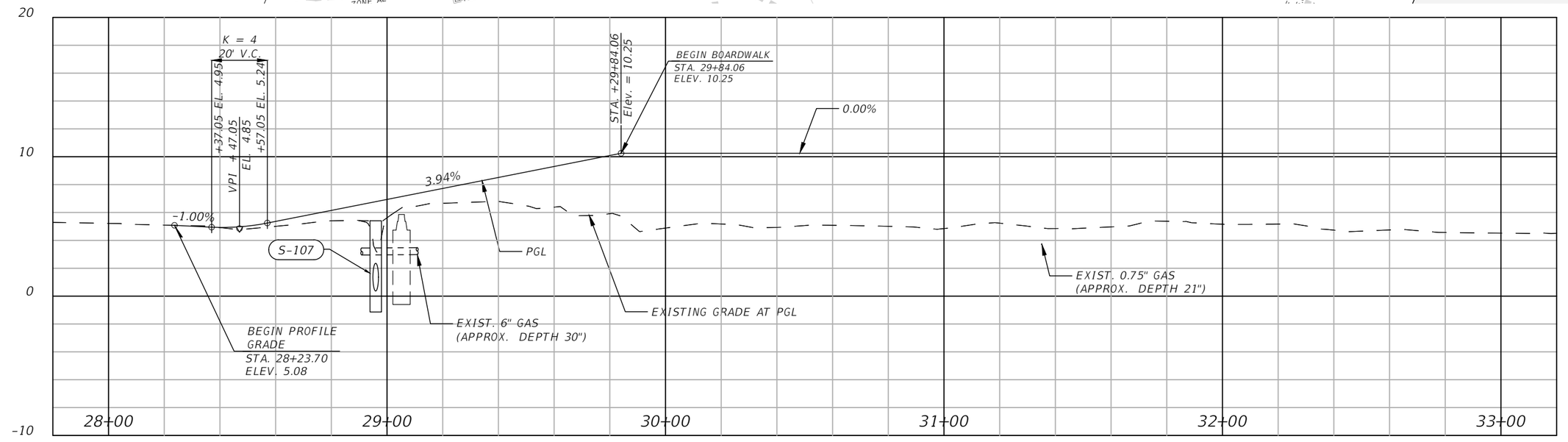

REVISIONS	
DATE	DESCRIPTION

CITY OF PORT ORANGE
1000 CITY CENTER CIRCLE
PORT ORANGE, FL 32129

MERLYNN O. ANDERSON, P.E.
P.E. LICENSE NUMBER 83096

STANLEY CONSULTANTS, INC.
80 SPRING VISTA DRIVE
DEBARY, FL 32713

SJR2C LOOP TRAIL
FROM SOUTH OF SELIN CIR TO HERBERT ST

ROAD	COUNTY	FINANCIAL PROJECT ID
SPRUCE CREEK RD	VOLUSIA	439865-3-54-01

ROADWAY PLAN AND PROFILE

SHEET NO. 16

City of Port Orange c/o Valerie Duhl SA 2024-02331 (Sheet 9 of 11)

O'Neill, Karen 4/29/2024 10:02:49 AM Z:\2016 Projects\10962 (Port Orange)\TWO 09 - SUNTrail (SJR2C Loop) Spruce Creek Rd\CAD\439865\Roadway\PLPRRD01.dwg

THE OFFICIAL RECORD OF THIS SHEET IS THE ELECTRONIC FILE DIGITALLY SIGNED AND SEALED UNDER RULE 61G15-23.004, F.A.C.

MATCHLINE STA. – 33+20.00

LEGEND

PLAN SYMBOLS

- CONCRETE REMOVAL
- 4" THICK CONCRETE SIDEWALK (PER FDOT INDEX 522-001)
- 6" THICK CONCRETE SIDEWALK/DRIVEWAY (PER FDOT INDEX 522-002)
- 8' WIDE BOARDWALK (SEE DETAIL SHEET B1-02)

℄ CONSTRUCTION

TREE REMOVAL (TYP.)

EXIST. R/W

BENT No. 40 STA. 33+78.37

BENT No. 50 STA. 34+78.37

BENT No. 60 STA. 35+78.37

BENT No. 70 STA. 36+78.37

END BOARDWALK STA. 36+79.20

CONST. GRAVITY WALL B, SCHEME 1, WITH ALUMINUM PIPE HANDRAIL

36+97.66 12.00 RT.

36+93.79 12.00 RT.

36+79.87 12.00 RT.

ZONE AE (EL 6.0)

ZONE X

6TH ST
PARCEL ID: 630406000091
ALT KEY: 5578518
CITY OF PORT ORANGE
(O.R.B. 4060, PGS. 2312-2313)

HERBERT ST
PARCEL ID: 630406000008A
ALT KEY: 5080030
CITY OF PORT ORANGE
(O.R.B. 3221, PG. 1200)

TB-3

TB-4

A1

A2

A3

25' UPLAND BUFFER

8' STUCCO WALL

7' CLF

4' CLF

SANITARY MANHOLE TOP EL. 8.70'

BURIED GAS LINE MARKER POST

1" = 40'

APPARENT R/W

HERBERT STREET

37+61.75 18.67 LT.

DETECTABLE WARNINGS (TYP.)

CONST. 8' SIDEWALK

37+42.36 11.29 LT.

R 45'

5.00%

-4.13%

37+25.97 1.98 RT.

REMOVE 8 LF EXIST. FENCE WITHIN EXIST. R/W

37+86.46 16.73 LT.

REMOVE EXIST. CONC.

CONST. 8' SIDEWALK

38+17.56 15.02 LT.

8" CONC. SIDEWALK

6TH STREET

END PROJECT STA. 38+17.56

655 HERBE
PARCEL ID: 630
ALT KEY: 4
GN & TN
(O.R.B. 6611,

653 HERBE
PARCEL ID: 630
ALT KEY: 47
GN & TN
(O.R.B. 6913, P

626 6TH ST
PARCEL ID: 630402190110
ALT KEY: 3582683
GENSLER BRENDA A
(O.R.B. 7575, PG. 2143)

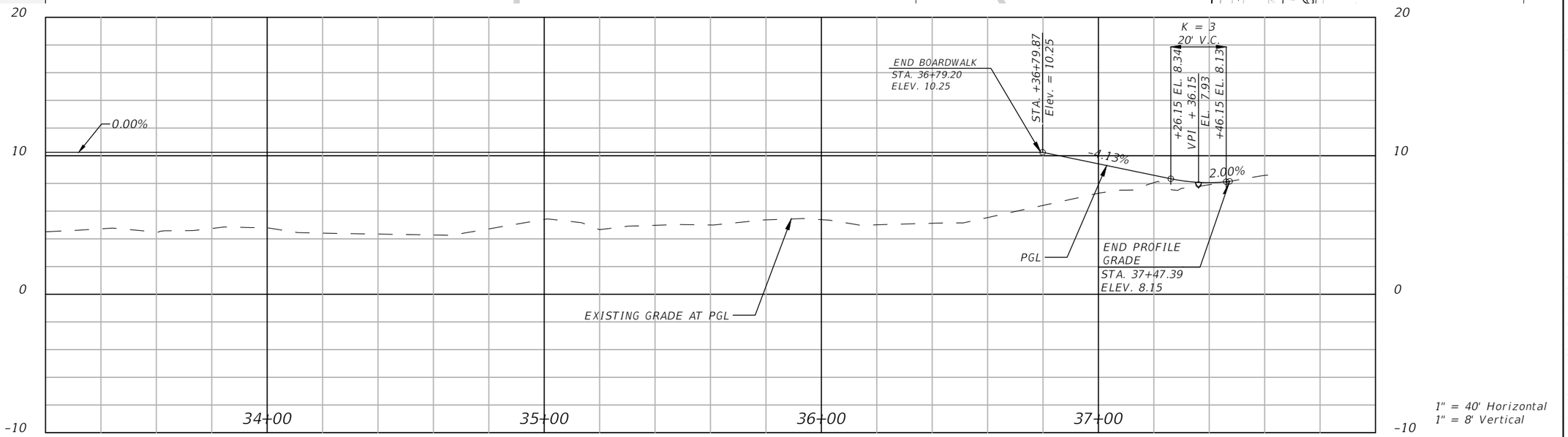

1" = 40' Horizontal
1" = 8' Vertical

REVISIONS	
DATE	DESCRIPTION

CITY OF PORT ORANGE
1000 CITY CENTER CIRCLE
PORT ORANGE, FL 32129

MERLYNN O. ANDERSON, P.E.
P.E. LICENSE NUMBER 83096

STANLEY CONSULTANTS, INC.
80 SPRING VISTA DRIVE
DEBARY, FL 32713

SJR2C LOOP TRAIL
FROM SOUTH OF SELIN CIR TO HERBERT ST

ROAD	COUNTY	FINANCIAL PROJECT ID
SPRUCE CREEK RD	VOLUSIA	439865-3-64-01

ROADWAY PLAN AND PROFILE

SHEET NO. 17

City of Port Orange c/o Valerie Duhl SAI-2024-02331 (Sheet 10 of 11)

O'Neill, Karen 4/29/2024 10:03:04 AM Z:\2016 Projects\10962 (Port Orange)\TWO 09 – SUNTrail (SJR2C Loop) Spruce Creek Rd\CAD\439865\Roadway\PLPRRD01.dwg

THE OFFICIAL RECORD OF THIS SHEET IS THE ELECTRONIC FILE DIGITALLY SIGNED AND SEALED UNDER RULE 61G15-23.004, F.A.C.

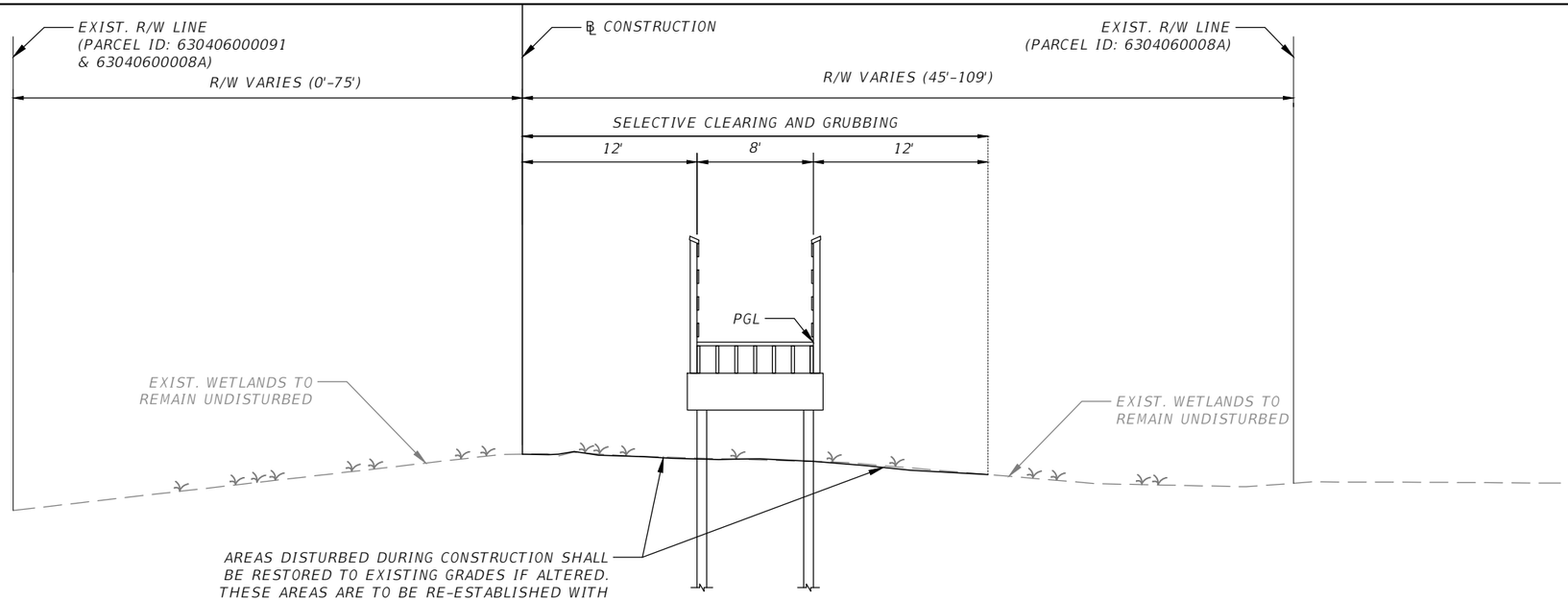

TYPICAL SECTION NO. 5
SPRUCE CREEK ROAD
STA. 29+84.06 TO STA. 36+79.20

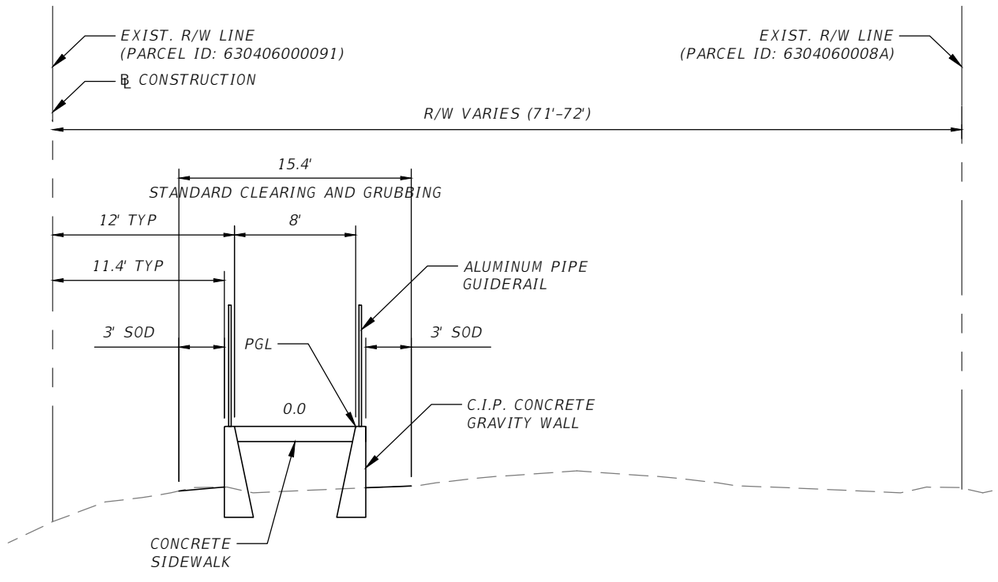

TYPICAL SECTION NO. 6
SPRUCE CREEK ROAD
STA. 36+79.20 TO STA. 36+93.79

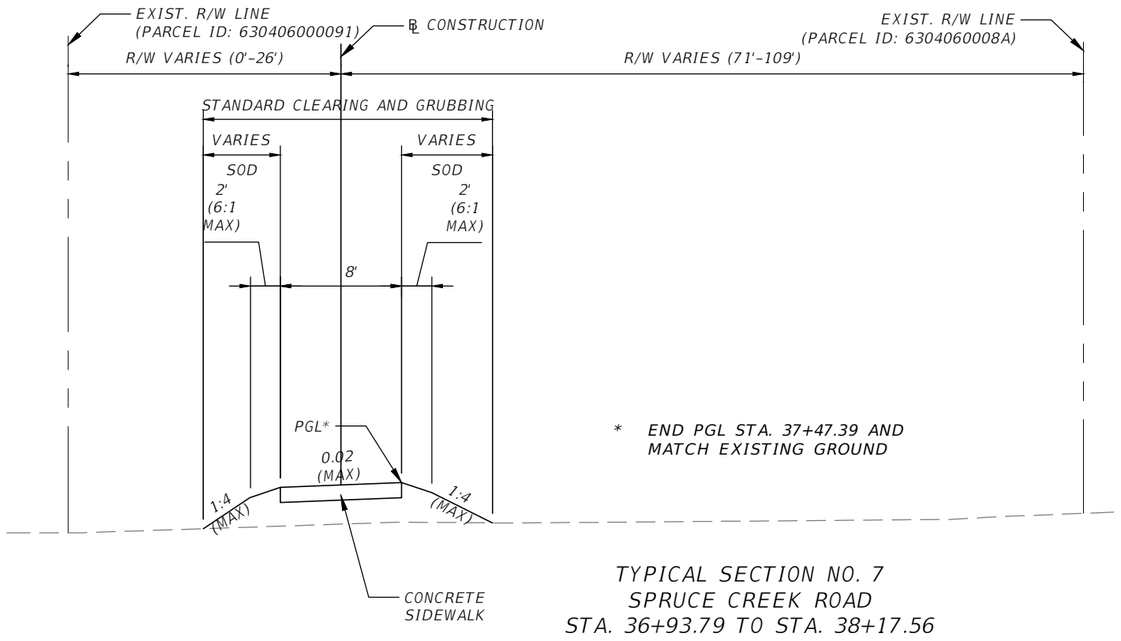

TYPICAL SECTION NO. 7
SPRUCE CREEK ROAD
STA. 36+93.79 TO STA. 38+17.56

THE OFFICIAL RECORD OF THIS SHEET IS THE ELECTRONIC FILE DIGITALLY SIGNED AND SEALED UNDER RULE 61G15-23.004, F.A.C.

REVISIONS	
DATE	DESCRIPTION

CITY OF PORT ORANGE
1000 CITY CENTER CIRCLE
PORT ORANGE, FL 32129

MERLYNN O. ANDERSON, P.E.
P.E. LICENSE NUMBER 83096

STANLEY CONSULTANTS, INC.
80 SPRING VISTA DRIVE
DEBARY, FL 32713

SJR2C LOOP TRAIL
FROM SOUTH OF SELIN CIR TO HERBERT ST

ROAD	COUNTY	FINANCIAL PROJECT ID
SPRUCE CREEK RD	VOLUSIA	439865-3-54-01

TYPICAL SECTION

SHEET NO. 10

City of Port Orange c/o Valerie Duhl SA-2024-02331 (Sheet 11 of 11)

St. Johns River
Water Management District
Michael A. Register, P.E., Executive Director

4049 Reid Street • P.O. Box 1429 • Palatka, FL 32178-1429 • 386-329-4500 • www.sjrwmd.com

August 16, 2024

Wayne Clarck
City of Port Orange
1000 City Center Cir
Port Orange, FL 32129-4144

SUBJECT: 29869-8
City of Port Orange - Multi-use Paths and Pedestrian Boardwalk

Dear Sir/Madam:

Enclosed is your individual permit issued by the St. Johns River Water Management District on August 16, 2024. This permit is a legal document and should be kept with your other important documents. Permit issuance does not relieve you from the responsibility of obtaining any necessary permits from any federal, state, or local agencies for your project.

Technical Staff Report:
If you wish to review a copy of the Technical Staff Report (TSR) that provides the District's staff analysis of your permit application, you may view the TSR by going to the Permitting section of the District's website at www.sjrwmd.com/permitting. Using the "search applications and permits" feature, you can use your permit number or project name to find information about the permit. When you see the results of your search, click on the permit number and then on the TSR folder.

Noticing Your Permit:
For noticing instructions, please refer to the noticing materials in this package regarding closing the point of entry for someone to challenge the issuance of your permit. Please note that if a timely petition for administrative hearing is filed, your permit will become non-final and any activities that you choose to undertake pursuant to your permit will be at your own risk. Please refer to the attached Notice of Rights to determine any legal rights you may have concerning the District's agency action.

Compliance with Permit Conditions:
To submit your required permit compliance information, go to the District's website at www.sjrwmd.com/permitting. Under the "Apply for a permit or submit compliance data" section, click to sign-in to your existing account or to create a new account. Select the "Compliance Submittal" tab, enter your permit number, and select "No Specific Date" for the Compliance Due Date Range. You will then be able to view all the compliance submittal requirements for your project. Select the compliance item that you are ready to submit and then attach the appropriate information or form. The forms to comply with your permit conditions are available at www.sjrwmd.com/permitting under the section "Handbooks, forms, fees, final orders". Click on forms to view all permit compliance forms, then scroll to the ERP application forms section and select the applicable compliance forms. Alternatively, if you have difficulty finding forms or need

GOVERNING BOARD

Rob Bradley, CHAIR FLEMING ISLAND
Maryam H. Ghyabi-White, VICE CHAIR ORMOND BEACH
J. Chris Peterson, SECRETARY WINTER PARK
Cole Oliver, TREASURER MERRITT ISLAND
Ryan Atwood MOUNT DORA
Doug Bournique VERO BEACH
Douglas Burnett ST. AUGUSTINE
Ron Howse COCOA
Janet Price FERNANDINA BEACH

copies of the appropriate forms, please contact the Bureau of Regulatory Support at (386) 329-4570.

Transferring Your Permit:
Your permit requires you to notify the District within 30 days of any change in ownership or control of the project or activity covered by the permit, or within 30 days of any change in ownership or control of the real property on which the permitted project or activity is located or occurs. You will need to provide the District with the information specified in rule 62-330.340, Florida Administrative Code (F.A.C.). Generally, this will require you to complete and submit Form 62-330.340(1), "Request to Transfer Permit," available at http://www.sjrwmd.com/permitting/permitforms.html.

Please note that a permittee is liable for compliance with the permit before the permit is transferred. The District, therefore, recommends that you request a permit transfer in advance in accordance with the applicable rules. You are encouraged to contact District staff for assistance with this process.

Thank you and please let us know if you have additional questions. For general questions contact e-permit@sjrwmd.com or (386) 329-4570.

Sincerely,

Michelle Reiber

Michelle Reiber, Bureau Chief
Division of Regulatory Services
St. Johns River Water Management District
525 Community College Parkway, S.E.
Palm Bay, FL 32909
(321) 409-2129

Enclosures: Permit
Notice of Rights
List of Newspapers for Publication

cc: District Permit File

Forest W Adkins
Stanley Consultants
80 Spring Vista Dr
DeBary, FL 32713-1821

Alexandra K Davis
DEP

Brett Anderson
Terracon Consultants, Inc.
8001 Baymeadows Way
Ste 1
Jacksonville, FL 32256-7521

ST. JOHNS RIVER WATER MANAGEMENT DISTRICT
Post Office Box 1429
Palatka, Florida 32178-1429

PERMIT NO: 29869-8 **DATE ISSUED:** August 16, 2024

PROJECT NAME: City of Port Orange - Multi-use Paths and Pedestrian Boardwalk

A PERMIT AUTHORIZING:
Modification of Permit Number IND-127-29869-6 for construction and operation of a Stormwater Management System for a 1.25-acre project known as City of Port Orange - Multi-use Paths and Pedestrian Boardwalk as per plans received by the District on May 13, 2024.

LOCATION:
Section(s): 4, 9 Township(s): 16S Range(s): 33E
Volusia County

Receiving Water Body:

Name	Class
Halifax Canal	Other/Unknown

ISSUED TO:
City of Port Orange
1000 City Center Cir
Port Orange, FL 32129-4144

The permittee agrees to hold and save the St. Johns River Water Management District and its successors harmless from any and all damages, claims, or liabilities which may arise from permit issuance. Said application, including all plans and specifications attached thereto, is by reference made a part hereof.

This permit does not convey to the permittee any property rights nor any rights or privileges other than those specified herein, nor relieve the permittee from complying with any law, regulation or requirement affecting the rights of other bodies or agencies. All structures and works installed by permittee hereunder shall remain the property of the permittee.

This permit may be revoked, modified or transferred at any time pursuant to the appropriate provisions of Chapter 373, Florida Statutes.

PERMIT IS CONDITIONED UPON:

See conditions on attached “Exhibit A”, dated August 16, 2024

AUTHORIZED BY: St. Johns River Water Management District
Division of Regulatory Services

By: Nicole Martin

Nicole Martin
Supervising Regulatory Scientist

"EXHIBIT A"
CONDITIONS FOR ISSUANCE OF PERMIT NUMBER 29869-8
City of Port Orange - Multi-use Paths and Pedestrian Boardwalk
DATED August 16, 2024

1. All activities shall be implemented following the plans, specifications and performance criteria approved by this permit. Any deviations must be authorized in a permit modification in accordance with Rule 62-330.315, F.A.C. Any deviations that are not so authorized may subject the permittee to enforcement action and revocation of the permit under Chapter 373, F.S.

2. A complete copy of this permit shall be kept at the work site of the permitted activity during the construction phase, and shall be available for review at the work site upon request by the District staff. The permittee shall require the contractor to review the complete permit prior to beginning construction.

3. Activities shall be conducted in a manner that does not cause or contribute to violations of state water quality standards. Performance-based erosion and sediment control best management practices shall be installed immediately prior to, and be maintained during and after construction as needed, to prevent adverse impacts to the water resources and adjacent lands. Such practices shall be in accordance with the State of Florida Erosion and Sediment Control Designer and Reviewer Manual (Florida Department of Environmental Protection and Florida Department of Transportation June 2007), and the Florida Stormwater Erosion and Sedimentation Control Inspector's Manual (Florida Department of Environmental Protection, Nonpoint Source Management Section, Tallahassee, Florida, July 2008), which are both incorporated by reference in subparagraph 62-330.050(9)(b)5, F.A.C., unless a project-specific erosion and sediment control plan is approved or other water quality control measures are required as part of the permit.

4. At least 48 hours prior to beginning the authorized activities, the permittee shall submit to the District a fully executed Form 62-330.350(1), "Construction Commencement Notice," (October 1, 2013) (http://www.flrules.org/Gateway/reference.asp?No=Ref-02505), incorporated by reference herein, indicating the expected start and completion dates. A copy of this form may be obtained from the District, as described in subsection 62-330.010(5), F.A.C., and shall be submitted electronically or by mail to the Agency. However, for activities involving more than one acre of construction that also require a NPDES stormwater construction general permit, submittal of the Notice of Intent to Use Generic Permit for Stormwater Discharge from Large and Small Construction Activities, DEP Form 62-621.300(4)(b), shall also serve as notice of commencement of construction under this chapter and, in such a case, submittal of Form 62-330.350(1) is not required.

5. Unless the permit is transferred under Rule 62-330.340, F.A.C., or transferred to an operating entity under Rule 62-330.310, F.A.C., the permittee is liable to comply with the plans, terms and conditions of the permit for the life of the project or activity.

6. Within 30 days after completing construction of the entire project, or any independent portion of the project, the permittee shall provide the following to the Agency, as applicable:

    a. For an individual, private single-family residential dwelling unit, duplex, triplex, or quadruplex — "Construction Completion and Inspection Certification for Activities Associated with a Private Single-Family Dwelling Unit" [Form 62-330.310(3)]; or

    b. For all other activities — "As-Built Certification and Request for Conversion to Operation Phase" [Form 62-330.310(1)].

c. If available, an Agency website that fulfills this certification requirement may be used in lieu of the form.

7. If the final operation and maintenance entity is a third party:

   a. Prior to sales of any lot or unit served by the activity and within one year of permit issuance, or within 30 days of as-built certification, whichever comes first, the permittee shall submit, as applicable, a copy of the operation and maintenance documents (see sections 12.3 thru 12.3.4 of Volume I) as filed with the Florida Department of State, Division of Corporations and a copy of any easement, plat, or deed restriction needed to operate or maintain the project, as recorded with the Clerk of the Court in the County in which the activity is located.

   b. Within 30 days of submittal of the as- built certification, the permittee shall submit "Request for Transfer of Environmental Resource Permit to the Perpetual Operation and Maintenance Entity" [Form 62-330.310(2)] to transfer the permit to the operation and maintenance entity, along with the documentation requested in the form. If available, an Agency website that fulfills this transfer requirement may be used in lieu of the form.

8. The permittee shall notify the District in writing of changes required by any other regulatory District that require changes to the permitted activity, and any required modification of this permit must be obtained prior to implementing the changes.

9. This permit does not:

   a. Convey to the permittee any property rights or privileges, or any other rights or privileges other than those specified herein or in Chapter 62-330, F.A.C.;

   b. Convey to the permittee or create in the permittee any interest in real property;

   c. Relieve the permittee from the need to obtain and comply with any other required federal, state, and local authorization, law, rule, or ordinance; or

   d. Authorize any entrance upon or work on property that is not owned, held in easement, or controlled by the permittee.

10. Prior to conducting any activities on state-owned submerged lands or other lands of the state, title to which is vested in the Board of Trustees of the Internal Improvement Trust Fund, the permittee must receive all necessary approvals and authorizations under Chapters 253 and 258, F.S. Written authorization that requires formal execution by the Board of Trustees of the Internal Improvement Trust Fund shall not be considered received until it has been fully executed.

11. The permittee shall hold and save the District harmless from any and all damages, claims, or liabilities that may arise by reason of the construction, alteration, operation, maintenance, removal, abandonment or use of any project authorized by the permit.

12. The permittee shall notify the District in writing:

    a. Immediately if any previously submitted information is discovered to be inaccurate; and

    b. Within 30 days of any conveyance or division of ownership or control of the property or the system, other than conveyance via a long-term lease, and the new owner shall

request transfer of the permit in accordance with Rule 62-330.340, F.A.C. This does not apply to the sale of lots or units in residential or commercial subdivisions or condominiums where the stormwater management system has been completed and converted to the operation phase.

13. Upon reasonable notice to the permittee, District staff with proper identification shall have permission to enter, inspect, sample and test the project or activities to ensure conformity with the plans and specifications authorized in the permit.

14. If prehistoric or historic artifacts, such as pottery or ceramics, projectile points, stone tools, dugout canoes, metal implements, historic building materials, or any other physical remains that could be associated with Native American, early European, or American settlement are encountered at any time within the project site area, the permitted project shall cease all activities involving subsurface disturbance in the vicinity of the discovery. The permittee or other designee shall contact the Florida Department of State, Division of Historical Resources, Compliance Review Section (DHR), at (850) 245-6333, as well as the appropriate permitting agency office. Project activities shall not resume without verbal or written authorization from the Division of Historical Resources. If unmarked human remains are encountered, all work shall stop immediately and the proper authorities notified in accordance with Section 872.05, F.S. For project activities subject to prior consultation with the DHR and as an alternative to the above requirements, the permittee may follow procedures for unanticipated discoveries as set forth within a cultural resources assessment survey determined complete and sufficient by DHR and included as a specific permit condition herein.

15. Any delineation of the extent of a wetland or other surface water submitted as part of the permit application, including plans or other supporting documentation, shall not be considered binding unless a specific condition of this permit or a formal determination under Rule 62-330.201, F.A.C., provides otherwise.

16. The permittee shall provide routine maintenance of all components of the stormwater management system to remove trapped sediments and debris. Removed materials shall be disposed of in a landfill or other uplands in a manner that does not require a permit under Chapter 62-330, F.A.C., or cause violations of state water quality standards.

17. This permit is issued based on the applicant's submitted information that reasonably demonstrates that adverse water resource-related impacts will not be caused by the completed permit activity. If any adverse impacts result, the District will require the permittee to eliminate the cause, obtain any necessary permit modification, and take any necessary corrective actions to resolve the adverse impacts.

18. A Recorded Notice of Environmental Resource Permit may be recorded in the county public records in accordance with Rule 62-330.090(7), F.A.C. Such notice is not an encumbrance upon the property.

19. This permit for construction will expire five years from the date of issuance.

20. All wetland areas or water bodies that are outside the specific limits of construction authorized by this permit must be protected from erosion, siltation, scouring or excess turbidity, and dewatering.

21. This permit does not authorize the permittee to cause any adverse impact to or "take" of state listed species and other regulated species of fish and wildlife. Compliance with state laws regulating the take of fish and wildlife is the responsibility of the owner or applicant associated with this project. Please refer to Chapter 68A-27 of the Florida Administrative Code for definitions of "take" and a list of fish and wildlife species. If listed species are

observed onsite, FWC staff are available to provide decision support information or assist in obtaining the appropriate FWC permits. Most marine endangered and threatened species are statutorily protected and a “take” permit cannot be issued. Requests for further information or review can be sent to FWCConservationPlanningServices@MyFWC.com.

22. Before the start of any construction, the permittee must provide the District with documentation demonstrating that 0.14 Freshwater Forested Wetland mitigation credits have been debited from the Port Orange Forested Freshwater Mitigation Bank ledger.

23. In the event that the permittee does not successfully complete the transaction to obtain 0.14 Freshwater Forested Wetland UMAM mitigation credits from Port Orange Forested Freshwater Mitigation Bank, the permittee must obtain a permit modification to provide alternative mitigation.

24. The proposed project must be constructed and operated as per plans received by the District on May 13, 2024.

Notice Of Rights

1. A person whose substantial interests are or may be affected has the right to request an administrative hearing by filing a written petition with the St. Johns River Water Management District (District). Pursuant to Chapter 28-106 and Rule 40C-1.1007, Florida Administrative Code, the petition must be filed (received) either by delivery at the office of the District Clerk at District Headquarters, P. O. Box 1429, Palatka Florida 32178-1429 (4049 Reid St., Palatka, FL 32177) or by e-mail with the District Clerk at Clerk@sjrwmd.com, within twenty-six (26) days of the District depositing the notice of District decision in the mail (for those persons to whom the District mails actual notice), within twenty-one (21) days of the District emailing the notice of District decision (for those persons to whom the District emails actual notice), or within twenty-one (21) days of newspaper publication of the notice of District decision (for those persons to whom the District does not mail or email actual notice). A petition must comply with Sections 120.54(5)(b)4. and 120.569(2)(c), Florida Statutes, and Chapter 28-106, Florida Administrative Code. The District will not accept a petition sent by facsimile (fax), as explained in paragraph no. 4 below.

2. Please be advised that if you wish to dispute this District decision, mediation may be available and that choosing mediation does not affect your right to an administrative hearing. If you wish to request mediation, you must do so in a timely-filed petition. If all parties, including the District, agree to the details of the mediation procedure, in writing, within 10 days after the time period stated in the announcement for election of an administrative remedy under Sections 120.569 and 120.57, Florida Statutes, the time limitations imposed by Sections 120.569 and 120.57, Florida Statutes, shall be tolled to allow mediation of the disputed District decision. The mediation must be concluded within 60 days of the date of the parties' written agreement, or such other timeframe agreed to by the parties in writing. Any mediation agreement must include provisions for selecting a mediator, a statement that each party shall be responsible for paying its pro-rata share of the costs and fees associated with mediation, and the mediating parties' understanding regarding the confidentiality of discussions and documents introduced during mediation. If mediation results in settlement of the administrative dispute, the District will enter a final order consistent with the settlement agreement. If mediation terminates without settlement of the dispute, the District will notify all the parties in writing that the administrative hearing process under Sections 120.569 and 120.57, Florida Statutes, is resumed. Even if a party chooses not to engage in formal mediation, or if formal mediation does not result in a settlement agreement, the District will remain willing to engage in informal settlement discussions.

3. A person whose substantial interests are or may be affected has the right to an informal administrative hearing pursuant to Sections 120.569 and 120.57(2), Florida Statutes, where no material facts are in dispute. A petition for an informal hearing must also comply with the requirements set forth in Rule 28-106.301, Florida Administrative Code.

Notice Of Rights

4. A petition for an administrative hearing is deemed filed upon receipt of the complete petition by the District Clerk at the District Headquarters in Palatka, Florida during the District's regular business hours. The District's regular business hours are 8:00 a.m. – 5:00 p.m., excluding weekends and District holidays. Petitions received by the District Clerk after the District's regular business hours shall be deemed filed as of 8:00 a.m. on the District's next regular business day. The District's acceptance of petitions filed by e-mail is subject to certain conditions set forth in the District's Statement of Agency Organization and Operation (issued pursuant to Rule 28-101.001, Florida Administrative Code), which is available for viewing at *sjrwmd.com*. These conditions include, but are not limited to, the petition being in the form of a PDF or TIFF file and being capable of being stored and printed by the District. Further, pursuant to the District's Statement of Agency Organization and Operation, attempting to file a petition by facsimile is prohibited and shall not constitute filing.

5. Failure to file a petition for an administrative hearing within the requisite timeframe shall constitute a waiver of the right to an administrative hearing. (Rule 28-106.111, Florida Administrative Code).

6. The right to an administrative hearing and the relevant procedures to be followed are governed by Chapter 120, Florida Statutes, Chapter 28-106, Florida Administrative Code, and Rule 40C-1.1007, Florida Administrative Code. Because the administrative hearing process is designed to formulate final agency action, the filing of a petition means the District's final action may be different from the position taken by it in this notice. A person whose substantial interests are or may be affected by the District's final action has the right to become a party to the proceeding, in accordance with the requirements set forth above.

7. Pursuant to Section 120.68, Florida Statutes, a party to the proceeding before the District who is adversely affected by final District action may seek review of the action in the District Court of Appeal by filing a notice of appeal pursuant to Rules 9.110 and 9.190, Florida Rules of Appellate Procedure, within 30 days of the rendering of the final District action.

8. A District action is considered rendered, as referred to in paragraph no. 7 above, after it is signed on behalf of the District and filed by the District Clerk.

9. Failure to observe the relevant timeframes for filing a petition for judicial review as described in paragraph no. 7 above will result in waiver of that right to review.

NOTICING INFORMATION

Please be advised that the St. Johns River Water Management District will not publish a notice in the newspaper advising the public that it has issued a permit for this project.

Newspaper publication, using the District's notice form, notifies members of the public of their right to challenge the issuance of the permit. If proper notice is given by newspaper publication, then there is a 21-day time limit for someone to file a petition for an administrative hearing to challenge the issuance of the permit.

To close the point of entry for filing a petition, you may publish (at your own expense) a one-time notice of the District's decision in a newspaper of general circulation within the affected area as defined in Section 50.011 of the Florida Statutes. If you do not publish a newspaper notice to close the point of entry, the time to challenge the issuance of your permit will not expire and someone could file a petition even after your project is constructed.

A copy of the notice form and a partial list of newspapers of general circulation are attached for your convenience. However, you are not limited to those listed newspapers. If you choose to close the point of entry and the notice is published, the newspaper will return to you an affidavit of publication. In that event, it is important that you either submit a scanned copy of the affidavit by emailing it to *compliancesupport@sjrwmd.com* (preferred method) **or** send a copy of the original affidavit to:

Office of Records and Regulatory Support
4049 Reid Street
Palatka, FL 32177

If you have any questions, please contact the Office of Records and Regulatory Support at (386) 329-4570.

NOTICE OF AGENCY ACTION TAKEN BY THE
ST. JOHNS RIVER WATER MANAGEMENT DISTRICT

Notice is given that the following permit was issued on _____:

(Name and address of applicant) _____
permit#_____. The project is located in _____County, Section _____, Township _____ South, Range _____ East. The permit authorizes a surface water management system on _____ acres for _____ known as _____. The receiving water body is _____.

A person whose substantial interests are or may be affected has the right to request an administrative hearing by filing a written petition with the St. Johns River Water Management District (District). Pursuant to Chapter 28-106 and Rule 40C-1.1007, Florida Administrative Code (F.A.C.), the petition must be filed (received) either by delivery at the office of the District Clerk at District Headquarters, P.O. Box 1429, Palatka FL 32178-1429 (4049 Reid St, Palatka, FL 32177) or by e-mail with the District Clerk at Clerk@sjrwmd.com, within twenty-one (21) days of newspaper publication of the notice of District decision (for those persons to whom the District does not mail or email actual notice). A petition must comply with Sections 120.54(5)(b)4. and 120.569(2)(c), Florida Statutes (F.S.), and Chapter 28-106, F.A.C. The District will not accept a petition sent by facsimile (fax). Mediation pursuant to Section 120.573, F.S., may be available and choosing mediation does not affect your right to an administrative hearing.

A petition for an administrative hearing is deemed filed upon receipt of the complete petition by the District Clerk at the District Headquarters in Palatka, Florida during the District's regular business hours. The District's regular business hours are 8 a.m. – 5 p.m., excluding weekends and District holidays. Petitions received by the District Clerk after the District's regular business hours shall be deemed filed as of 8 a.m. on the District's next regular business day. The District's acceptance of petitions filed by e-mail is subject to certain conditions set forth in the District's Statement of Agency Organization and Operation (issued pursuant to Rule 28-101.001, Florida Administrative Code), which is available for viewing at www.sjrwmd.com. These conditions include, but are not limited to, the petition being in the form of a PDF or TIFF file and being capable of being stored and printed by the District. Further, pursuant to the District's Statement of Agency Organization and Operation, attempting to file a petition by facsimile (fax) is prohibited and shall not constitute filing.

The right to an administrative hearing and the relevant procedures to be followed are governed by Chapter 120, Florida Statutes, Chapter 28-106, Florida Administrative Code, and Rule 40C-1.1007, Florida Administrative Code. Because the administrative hearing process is designed to formulate final agency action, the filing of a petition means the District's final action may be different from the position taken by it in this notice. **Failure to file a petition for an administrative hearing within the requisite time frame shall constitute a waiver of the right to an administrative hearing. (Rule 28-106.111, F.A.C.).**

If you wish to do so, please visit http://www.sjrwmd.com/nor_dec/ to read the complete Notice of Rights to determine any legal rights you may have concerning the District's decision(s) on the permit application(s) described above. You can also request the Notice of Rights by contacting the Director of Office of Records and Regulatory Support, 4049 Reid St., Palatka, FL 32177-2529, tele. no. (386)329-4570.

NEWSPAPER ADVERTISING

ALACHUA
Gainesville Sun, Legal Advertising
2700 SW 13th Street
Gainesville, FL 32608
866-858-9652

BAKER
Baker County Press, Legal Advertising
P. O. Box 598
Macclenny, FL 3206 3
904-259-2400/ fax 904-259-6502

BRADFORD
Bradford County Telegraph, Legal Advertising
P. O. Drawer A
Starke, FL 32901
904-964-6305/ fax 904-964-8628

BREVARD
Florida Today, Legal Advertising
P. O. Box 419000
Melbourne, FL 32941-9000
321-242-3832/ fax 321-242-6618

CLAY
Clay Today, Legal Advertising
1560 Kinsley Ave., Suite 1
Orange Park, FL 32073
904-264-3200/ fax 904-264-3285

DUVAL
Daily Record, Legal Advertising
P. O. Box 1769
Jacksonville, FL 32201
904-356-2466 / fax 904-353-2628

FLAGLER
Flagler Tribune, c/o News Journal
P. O. Box 2831
Daytona Beach, FL 32120-2831
386- 681-2322

INDIAN RIVER
Treasure Coast News
760 NW Enterprise Dr.
Port St. Lucie, FL 34986
772-283-5252

LAKE
Daily Commercial, Legal Advertising
P. O. Drawer 490007
Leesburg, FL 34749
352-365-8235/fax 352-365-1951

MARION
Ocala Star Banner, Legal Advertising
2121 SW 19th Avenue Road
Ocala, FL 34474
352-867-4010/fax 352-867-4126

NASSAU
News-Leader, Legal Advertising
P. O. Box 766
Fernandina Beach, FL 32035
904-261-3696/fax 904-261-3698

OKEECHOBEE
Okeechobee News, Legal Advertising
P. O. Box 639
Okeechobee, FL 34973-0639
863-763-3134/fax 863-763-5901

ORANGE
Sentinel Communications, Legal Advertising
633 N. Orange Avenue
Orlando, FL 32801
407-420-5160/ fax 407-420-5011

OSCEOLA
Little Sentinel, Legal Advertising
633 N. Orange Avenue
Orlando, FL 32801
407-420-5160/ fax 407-420-5011

PUTNAM
Palatka Daily News, Legal Advertising
P. O. Box 777
Palatka, FL 32178
386-312-5200/ fax 386-312-5209

ST. JOHNS
St. Augustine Record, Legal Advertising
P. O. Box 1630
St. Augustine, FL 32085
904-819-3439

SEMINOLE
Sanford Herald, Legal Advertising
300 North French Avenue
Sanford, FL 32771
407-323-9408

VOLUSIA
News Journal Corporation, Legal Advertising
P. O. Box 2831
Daytona Beach, FL 32120-2831
(386) 681-2322

CITY OF PORT ORANGE
BID TABULATION
ITB #25-13 439865-3-54-01 SJR2C LOOP TRAIL (SPRUCE CREEK RD.) FROM SOUTH OF SELIN CIRCLE TO HERBERT STREET

				CARR & COLLIER, INC.		NON-RESPONSIVE ALL STATE CIVIL CONSTRUCTION, INC.		GPS CIVIL CONTRACTOR, INC.		MASCI GENERAL CONTRACTOR, INC.		CATHCART CONSTRUCTION COMPANY - FLORIDA, LLC	
ITEM #	ITEM DESCRIPTION	QTY	UNIT of MEASURE	UNIT PRICE	EXTENDED PRICE	UNIT PRICE	EXTENDED PRICE	UNIT PRICE	EXTENDED PRICE	UNIT PRICE	EXTENDED PRICE	UNIT PRICE	EXTENDED PRICE
0101 1	MOBILIZATION	1	LS	$ 177,535.70	$ 177,535.70	$ 246,000.00	$ 246,000.00	$ 210,000.00	$ 210,000.00	$ 143,258.00	$ 143,258.00	$ 208,000.00	$ 208,000.00
0102 1	MAINTENANCE OF TRAFFIC	1	LS	$ 17,500.00	$ 17,500.00	$ 30,000.00	$ 30,000.00	$ 40,000.00	$ 40,000.00	$ 25,000.00	$ 25,000.00	$ 52,500.00	$ 52,500.00
0104 10 3	SEDIMENT BARRIER	5,168	LF	$ 3.30	$ 17,054.40	$ 3.14	$ 16,227.52	$ 2.00	$ 10,336.00	$ 1.75	$ 9,044.00	$ 8.00	$ 41,344.00
0104 11	FLOATING TURBIDITY BARRIER	200	LF	$ 26.00	$ 5,200.00	$ 22.00	$ 4,400.00	$ 15.00	$ 3,000.00	$ 12.50	$ 2,500.00	$ 21.50	$ 4,300.00
0104 18	INLET PROTECTION SYSTEM	3	EA	$ 275.00	$ 825.00	$ 180.00	$ 540.00	$ 200.00	$ 600.00	$ 200.00	$ 600.00	$ 500.00	$ 1,500.00
0110 1 1	CLEARING & GRUBBING	0.689	AC	$ 25,400.00	$ 17,500.60	$ 15,000.00	$ 10,335.00	$ 100,000.00	$ 68,900.00	$ 50,000.00	$ 34,450.00	$ 164,000.00	$ 112,996.00
0110 2 2	SELECTIVE CLEARING AND GRUBBING, AREAS WITH TREES TO REMAIN	0.529	AC	$ 41,500.00	$ 21,953.50	$ 40,000.00	$ 21,160.00	$ 100,000.00	$ 52,900.00	$ 75,000.00	$ 39,675.00	$ 60,000.00	$ 31,740.00
0110 23	TREE REMOVAL	5	EA	$ 2,812.00	$ 14,060.00	$ 2,500.00	$ 12,500.00	$ 2,500.00	$ 12,500.00	$ 1,540.00	$ 7,700.00	$ 6,450.00	$ 32,250.00
0110 4 10	REMOVAL OF EXISTING CONCRETE	189	SY	$ 70.00	$ 13,230.00	$ 12.00	$ 2,268.00	$ 100.00	$ 18,900.00	$ 37.50	$ 7,087.50	$ 62.75	$ 11,859.75
0120 1	REGULAR EXCAVATION	68.0	CY	$ 54.35	$ 3,695.80	$ 50.00	$ 3,400.00	$ 100.00	$ 6,800.00	$ 35.27	$ 2,398.36	$ 88.00	$ 5,984.00
0120 6	EMBANKMENT	215.0	CY	$ 68.80	$ 14,792.00	$ 28.00	$ 6,020.00	$ 120.00	$ 25,800.00	$ 39.45	$ 8,481.75	$ 110.00	$ 23,650.00
0160 4	TYPE B STABILIZATION	1,038	SY	$ 36.70	$ 38,094.60	$ 15.00	$ 15,570.00	$ 22.00	$ 22,836.00	$ 8.50	$ 8,823.00	$ 38.00	$ 39,444.00
285701-A	DENSE GRADED AGGREGATE BASE (98% MOD PROCTOR DENSITY) 3" THICK	1,038	SY	$ 32.90	$ 34,150.20	$ 30.00	$ 31,140.00	$ 22.00	$ 22,836.00	$ 27.50	$ 28,545.00	$ 43.50	$ 45,153.00
0334 1 12	SUPERPAVE ASPHALTIC CONC, TRAFFIC B	342.5	TN	$ 298.00	$ 102,065.00	$ 256.25	$ 87,765.63	$ 200.00	$ 68,500.00	$ 139.57	$ 47,802.73	$ 287.50	$ 98,468.75
0400 0 11	CONCRETE CLASS NS, GRAVITY WALL INDEX 400-011	83.3	CY	$ 1,240.00	$ 103,292.00	$ 1,187.50	$ 98,918.75	$ 2,000.00	$ 166,600.00	$ 1,532.00	$ 127,615.60	$ 1,275.00	$ 106,207.50
0425 1521	INLETS, DT BOT, TYPE C,<10'	3	EA	$ 9,125.00	$ 27,375.00	$ 5,000.00	$ 15,000.00	$ 4,700.00	$ 14,100.00	$ 8,240.00	$ 24,720.00	$ 6,350.00	$ 19,050.00
0425 5	MANHOLE, ADJUST	1	EA	$ 3,360.00	$ 3,360.00	$ 2,000.00	$ 2,000.00	$ 4,500.00	$ 4,500.00	$ 1,050.00	$ 1,050.00	$ 3,760.00	$ 3,760.00
0430174118	PIPE CULVERT, OPTIONAL MATERIAL, ROUND, 18"SD	131	LF	$ 165.00	$ 21,615.00	$ 76.00	$ 9,956.00	$ 116.00	$ 15,196.00	$ 139.77	$ 18,309.87	$ 354.25	$ 46,406.75
0430174124	PIPE CULVERT, OPTIONAL MATERIAL, ROUND, 24"SD	29	LF	$ 265.00	$ 7,685.00	$ 122.00	$ 3,538.00	$ 158.00	$ 4,582.00	$ 165.58	$ 4,801.82	$ 507.50	$ 14,717.50
0430982125	MITERED END SECTION, OPTIONAL ROUND, 18" CD	3	EA	$ 15,645.00	$ 46,935.00	$ 3,300.00	$ 9,900.00	$ 3,000.00	$ 9,000.00	$ 3,700.00	$ 11,100.00	$ 3,180.00	$ 9,540.00
0430982129	MITERED END SECTION, OPTIONAL ROUND, 24" CD	1	EA	$ 17,000.00	$ 17,000.00	$ 3,700.00	$ 3,700.00	$ 3,200.00	$ 3,200.00	$ 4,000.00	$ 4,000.00	$ 3,450.00	$ 3,450.00
0430984125	MITERED END SECTION, OPTIONAL ROUND, 18" SD	1	EA	$ 15,645.00	$ 15,645.00	$ 3,300.00	$ 3,300.00	$ 6,200.00	$ 6,200.00	$ 3,700.00	$ 3,700.00	$ 5,650.00	$ 5,650.00
0515 1 2	PIPE HANDRAIL - GUIDERAIL, ALUMINUM	308	LF	$ 69.00	$ 21,252.00	$ 82.00	$ 25,256.00	$ 120.00	$ 36,960.00	$ 71.00	$ 21,868.00	$ 110.00	$ 33,880.00
0520 1 10	CONCRETE CURB & GUTTER, TYPE F	180	LF	$ 42.00	$ 7,560.00	$ 56.25	$ 10,125.00	$ 70.00	$ 12,600.00	$ 53.40	$ 9,612.00	$ 128.25	$ 23,085.00
0522 1	CONCRETE SIDEWALK AND DRIVEWAYS, 4" THICK	485	SY	$ 83.00	$ 40,255.00	$ 135.00	$ 65,475.00	$ 72.00	$ 34,920.00	$ 89.50	$ 43,407.50	$ 123.25	$ 59,776.25
0522 2	CONCRETE SIDEWALK AND DRIVEWAYS, 6" THICK	284	SY	$ 107.00	$ 30,388.00	$ 143.75	$ 40,825.00	$ 120.00	$ 34,080.00	$ 110.47	$ 31,373.48	$ 185.00	$ 52,540.00
0527 2	DETECTABLE WARNINGS	287	SF	$ 47.50	$ 13,632.50	$ 30.00	$ 8,610.00	$ 40.00	$ 11,480.00	$ 28.00	$ 8,036.00	$ 50.00	$ 14,350.00
0570 1 2	PERFORMANCE TURF, SOD	2,558	SY	$ 12.30	$ 31,463.40	$ 10.23	$ 26,168.34	$ 10.00	$ 25,580.00	$ 5.10	$ 13,045.80	$ 11.00	$ 28,138.00
0630 2 11	CONDUIT, FURNISH & INSTALL, OPEN TRENCH	364	LF	$ 21.75	$ 7,917.00	$ 24.93	$ 9,074.52	$ 21.00	$ 7,644.00	$ 27.73	$ 10,093.72	$ 30.50	$ 11,102.00
0630 2 12	CONDUIT, FURNISH & INSTALL, DIRECTIONAL BORE	120	LF	$ 28.25	$ 3,390.00	$ 30.03	$ 3,603.60	$ 27.00	$ 3,240.00	$ 33.41	$ 4,009.20	$ 60.00	$ 7,200.00
0630 2 14	CONDUIT, FURNISH & INSTALL, ABOVEGROUND	90	LF	$ 45.30	$ 4,077.00	$ 16.95	$ 1,525.50	$ 44.00	$ 3,960.00	$ 18.86	$ 1,697.40	$ 47.50	$ 4,275.00
0630 2 15	CONDUIT, FURNISH & INSTALL, BRIDGE MOUNT	697	LF	$ 47.00	$ 32,759.00	$ 18.55	$ 12,929.35	$ 45.00	$ 31,365.00	$ 20.64	$ 14,386.08	$ 36.25	$ 25,266.25
0632 7 2	SIGNAL CABLE- REPAIR/REPLACE/OTHER, FURNISH & INSTALL	50	LF	$ 10.70	$ 535.00	$ 8.11	$ 405.50	$ 11.00	$ 550.00	$ 9.02	$ 451.00	$ 10.50	$ 525.00
0633 6	FIBER OPTIC CABLE LOCATOR	1	DA	$ 1,100.00	$ 1,100.00	$ 478.41	$ 478.41	$ 1,100.00	$ 1,100.00	$ 532.35	$ 532.35	$ 2,420.00	$ 2,420.00
0635 2 11	PULL & SPLICE BOX, F&I, 13" x 24" COVER SIZE	15	EA	$ 2,375.00	$ 35,625.00	$ 2,877.99	$ 43,169.85	$ 2,300.00	$ 34,500.00	$ 3,202.50	$ 48,037.50	$ 4,820.00	$ 72,300.00
0635 3 11	JUNCTION BOX, FURNISH & INSTALL, AERIAL	12	EA	$ 727.00	$ 8,724.00	$ 1,720.59	$ 20,647.08	$ 700.00	$ 8,400.00	$ 1,914.60	$ 22,975.20	$ 1,460.00	$ 17,520.00
0639 1112	ELECTRICAL POWER SERVICE, F&I, OVERHEAD METER PURCHASED BY CONTRACTOR FROM POWER COMPANY	4	AS	$ 6,810.00	$ 27,240.00	$ 3,613.86	$ 14,455.44	$ 6,500.00	$ 26,000.00	$ 4,021.36	$ 16,085.44	$ 7,575.00	$ 30,300.00
0639 2 1	ELECTRICAL SERVICE WIRE, FURNISH & INSTALL	360	LF	$ 9.40	$ 3,384.00	$ 7.53	$ 2,710.80	$ 9.00	$ 3,240.00	$ 8.37	$ 3,013.20	$ 15.00	$ 5,400.00
0639 3 11	ELECTRICAL SERVICE DISCONNECT, F&I, POLE MOUNT	1	EA	$ 2,195.00	$ 2,195.00	$ 3,857.63	$ 3,857.63	$ 2,100.00	$ 2,100.00	$ 4,292.60	$ 4,292.60	$ 3,350.00	$ 3,350.00
0641 2 12	PRESTRESSED CONCRETE POLE, F&I, TYPE P-II SERVICE POLE	4	EA	$ 2,934.00	$ 11,736.00	$ 4,030.31	$ 16,121.24	$ 2,800.00	$ 11,200.00	$ 4,484.75	$ 17,939.00	$ 4,675.00	$ 18,700.00

ITEM #	ITEM DESCRIPTION	QTY	UNIT of MEASURE	CARR & COLLIER, INC.		ALL STATE CIVIL CONSTRUCTION, INC.		GPS CIVIL CONTRACTOR, INC.		MASCI GENERAL CONTRACTOR, INC.		CATHCART CONSTRUCTION COMPANY - FLORIDA, LLC	
				UNIT PRICE	EXTENDED PRICE	UNIT PRICE	EXTENDED PRICE	UNIT PRICE	EXTENDED PRICE	UNIT PRICE	EXTENDED PRICE	UNIT PRICE	EXTENDED PRICE
0646 1 11	ALUMINUM SIGNALS POLE, PEDESTAL	2	EA	$ 3,234.00	$ 6,468.00	$ 4,083.00	$ 8,166.00	$ 3,100.00	$ 6,200.00	$ 4,487.76	$ 8,975.52	$ 4,725.00	$ 9,450.00
0646 1 12	ALUMINUM SIGNALS POLE, FURNISH & INSTALL PEDESTRIAN DETECTOR POST	6	EA	$ 2,320.00	$ 13,920.00	$ 3,350.18	$ 20,101.08	$ 2,300.00	$ 13,800.00	$ 3,727.93	$ 22,367.58	$ 2,560.00	$ 15,360.00
0653 1 11	PEDESTRIAN SIGNAL, FURNISH & INSTALL LED COUNTDOWN, 1 WAY	2	AS	$ 1,114.00	$ 2,228.00	$ 892.59	$ 1,785.18	$ 1,100.00	$ 2,200.00	$ 993.23	$ 1,986.46	$ 2,700.00	$ 5,400.00
0653 1 60	PEDESTRIAN SIGNAL, REMOVE PED SIGNAL- POLE/PEDESTAL TO REMAIN	2	AS	$ 240.00	$ 480.00	$ 318.94	$ 637.88	$ 230.00	$ 460.00	$ 354.90	$ 709.80	$ 215.00	$ 430.00
0654 2 12	MIDBLOCK CROSSWALK: RECTANGULAR RAPID FLASHING BEACON, FURNISH & INSTALL-AC, COMPLETE SIGN ASSEMBLY- BACK TO BACK	6	AS	$ 14,925.00	$ 89,550.00	$ 14,139.56	$ 84,837.36	$ 15,000.00	$ 90,000.00	$ 15,733.90	$ 94,403.40	$ 15,660.00	$ 93,960.00
0665 1 11	PEDESTRIAN DETECTOR, FURNISH & INSTALL, STANDARD	2	EA	$ 328.00	$ 656.00	$ 705.91	$ 1,411.82	$ 630.00	$ 1,260.00	$ 785.51	$ 1,571.02	$ 675.00	$ 1,350.00
0665 1 60	PEDESTRIAN DETECTOR, REMOVE- POLE/PEDESTAL TO REMAIN	2	EA	$ 60.00	$ 120.00	$ 159.48	$ 318.96	$ 60.00	$ 120.00	$ 177.45	$ 354.90	$ 215.00	$ 430.00
0700 1111	SINGLE COLUMN GROUND SIGN ASSEMBLY, F&I GROUND MOUNT, LESS THAN 12 SF	20	EA	$ 540.00	$ 10,800.00	$ 895.48	$ 17,909.60	$ 620.00	$ 12,400.00	$ 996.45	$ 19,929.00	$ 1,000.00	$ 20,000.00
0700 1600	SINGLE COLUMN GROUND SIGN ASSEMBLY, REMOVE	3	EA	$ 60.00	$ 180.00	$ 318.94	$ 956.82	$ 86.00	$ 258.00	$ 354.90	$ 1,064.70	$ 150.00	$ 450.00
0711 11123	THERMOPLASTIC, STANDARD, WHITE, SOLID, 12" FOR CROSSWALK AND ROUNDABOUT	442	LF	$ 9.20	$ 4,066.40	$ 6.88	$ 3,040.96	$ 8.00	$ 3,536.00	$ 18.00	$ 7,956.00	$ 5.00	$ 2,210.00
0711 11125	THERMOPLASTIC, STANDARD, WHITE, SOLID, 24" FOR STOP LINE AND CROSSWALK	470	LF	$ 18.00	$ 8,460.00	$ 12.50	$ 5,875.00	$ 14.00	$ 6,580.00	$ 21.00	$ 9,870.00	$ 10.00	$ 4,700.00
0711 11160	THERMOPLASTIC, STANDARD, WHITE, MESSAGE OR SYMBOL	2	EA	$ 601.00	$ 1,202.00	$ 312.50	$ 625.00	$ 200.00	$ 400.00	$ 595.00	$ 1,190.00	$ 310.00	$ 620.00
0711 16101	THERMOPLASTIC, STANDARD-OTHER SURFACES, WHITE, SOLID, 6"	0.003	GM	$ 200,000.00	$ 600.00	$ 12,500.00	$ 37.50	$ 20,000.00	$ 60.00	$ 275,000.00	$ 825.00	$ 8,750.00	$ 26.25
0711 17 1	THERMOPLASTIC, REMOVE EXISTING THERMOPLASTIC PAVEMENT MARKINGS- SURFACE TO REMAIN	317	SF	$ 2.40	$ 760.80	$ 3.75	$ 1,188.75	$ 20.00	$ 6,340.00	$ 10.00	$ 3,170.00	$ 12.50	$ 3,962.50
0715 1 12	LIGHTING CONDUCTORS, F&I, INSULATED, NO.8 - 6	3,247	LF	$ 3.30	$ 10,715.10	$ 2.73	$ 8,864.31	$ 4.00	$ 12,988.00	$ 3.03	$ 9,838.41	$ 5.50	$ 17,858.50
0715 516-513	LIGHT POLE COMPLETE-SPECIAL DESIGN, F&I, POLE TOP MOUNT, WOOD, 13'	11	EA	$ 8,500.00	$ 93,500.00	$ 7,973.56	$ 87,709.16	$ 8,200.00	$ 90,200.00	$ 8,872.66	$ 97,599.26	$ 6,825.00	$ 75,075.00
0715 516-518	LIGHT POLE COMPLETE-SPECIAL DESIGN, F&I, POLE TOP MOUNT, WOOD, 18'	1	EA	$ 11,000.00	$ 11,000.00	$ 8,379.83	$ 8,379.83	$ 11,000.00	$ 11,000.00	$ 9,324.71	$ 9,324.71	$ 6,825.00	$ 6,825.00
0751 49	TIMBER PEDESTRIAN BRIDGE	5,472	SF	$ 96.00	$ 525,312.00	$ 134.48	$ 735,874.56	$ 110.00	$ 601,920.00	$ 87.00	$ 476,064.00	$ 140.00	$ 766,080.00
			SUB-TOTAL BID ITEMS:		$ 1,783,815.00		$ 1,926,796.93		$ 1,935,927.00		$ 1,598,717.86		$ 2,352,286.00

ITEMS TO BE LOCALLY FUNDED

ITEM #	ITEM DESCRIPTION	QTY	UNIT of MEASURE	CARR & COLLIER, INC.		ALL STATE CIVIL CONSTRUCTION, INC.		GPS CIVIL CONTRACTOR, INC.		MASCI GENERAL CONTRACTOR, INC.		CATHCART CONSTRUCTION COMPANY - FLORIDA, LLC	
				UNIT PRICE	EXTENDED PRICE	UNIT PRICE	EXTENDED PRICE	UNIT PRICE	EXTENDED PRICE	UNIT PRICE	EXTENDED PRICE	UNIT PRICE	EXTENDED PRICE
0522 2A	CONCRETE SHARED USE PATH, 7" THICK (HEAVY DUTY) (IN LIEU OF 4" THICK)	47	SY	$ 380.00	$ 17,860.00	$ 187.50	$ 8,812.50	$ 300.00	$ 14,100.00	$ 159.75	$ 7,508.25	$ 659.00	$ 30,973.00
CITY-01	18" WAPRO STAINLESS WASTOP INLINE CHECK VALVE	1	EA	$ 15,025.00	$ 15,025.00	$ 21,000.00	$ 21,000.00	$ 18,800.00	$ 18,800.00	$ 27,635.54	$ 27,635.54	$ 27,250.00	$ 27,250.00
			SUB-TOTAL LOCALLY FUNDED ITEMS:		$ 32,885.00		$ 29,812.50		$ 32,900.00		$ 35,143.79		$ 58,223.00
			GRAND TOTAL ALL ITEMS:		$ 1,816,700.00		$ 1,956,609.43		$ 1,968,827.00		$ 1,633,861.65		$ 2,410,509.00

LEGEND
AC = ACREAGE
AS = ASSEMBLY
CY = CUBIC YARD
DA =
EA = EACH
ED = EACH DAY
GM=-
LF = LINEAR FEET
LS = LUMP SUM
SF = SQUARE FEET
SY = SQUARE YARD
TN = TON

ITB #25-13 439865-3-54-01 SJR2C Loop Trail
Form 7.1 Bid Submittal Checklist
Form 7.2 – Bidder’s Acknowledgement Form
EXCEPTIONS
Form 7.3 – Addendum and Change Order Procedure Acknowledgement
Form 7.4 – Drug Free Preference Statement
Form 7.5 – Public Entity Crimes Statement
Form 7.6 – Statement of Bidder's Qualifications
Form 7.7 – Professional References for Previous Experience
Form 7.8 – List of Subcontractors
Form 7.9 Scrutinized Companies Certification
Form 7.10 - E-Verify Affidavit
PROOF OF E-VERIFY ENROLLMENT
Form 7.11 Affidavit of Compliance with Section 287.138
Form 7.12 No Bid Response
Attachment 1 - Schedule of Unit Pricing
Affidavit Regarding Labor and Services
Original Bid Bond or certified check
Current Bonding Capacity Letter
Proof of pre-qualification in work class: Sidewalk and Flexible Paving
Submission of one (1) original maked "Original" and one (1) digital
Responsive Submittal

Carr & Collier, Inc.	All State Civil Construction, Inc.	Masci General Contractor, Inc.	GPS Civil Construction, Inc.	Cathcart Construction Company - Florida LLC
X	X	X	X	X
X	X	X	X	X
NONE	NONE	NONE	NONE	NONE
X	X	X	X	X
X	X	X	X	X
X	X	X	X	X
X	X	X	X	X
X	X	X	X	X
X	X	X	X	X
X	X	X	X	X
X	X	X	X	X
X		X	X	X
X	X	X	X	X
N/A	N/A	N/A	N/A	N/A
X	X	X	X	X
X	X	X	X	X
X	X	X	X	X
X	X	X	X	X
X	No - only their concrete sub Sparks is pre-qualified	X	X	X
X	X - SINGLE PAGE FILES	X	X	X
YES	NO	YES	YES	YES

CITY OF PORT ORANGE
BID TABULATION
ITB #25-13 439865-3-54-01 SJR2C LOOP TRAIL (SPRUCE CREEK RD.) FROM SOUTH OF SELIN CIRCLE TO HERBERT STREET

	CARR & COLLIER, INC.	NON-RESPONSIVE ALL STATE CIVIL CONSTRUCTION, INC.	GPS CIVIL CONTRACTOR, INC.	MASCI GENERAL CONTRACTOR, INC.	CATHCART CONSTRUCTION COMPANY - FLORIDA, LLC
SUB-TOTAL (BID ITEMS 1-58):	$ 1,783,815.00	$ 1,926,796.93	$ 1,935,927.00	$ 1,598,717.86	$ 2,352,286.00
ITEMS TO BE LOCALLY FUNDED					
SUB-TOTAL LOCALLY FUNDED ITEMS:	$ 32,885.00	$ 29,812.50	$ 32,900.00	$ 35,143.79	$ 58,223.00
GRAND TOTAL ALL ITEMS:	$ 1,816,700.00	$ 1,956,609.43	$ 1,968,827.00	$ 1,633,861.65	$ 2,410,509.00

NOTICE OF INTENT TO AWARD

ITB #25-13

439865-3-54-01 SJR2C Loop Trail (Spruce Creek Rd.) From South of Selin Circle to Herbert Street

---

July 28, 2025

On July 2, 2025, the City of Port Orange received four (4) responsive bid submittals for **ITB #25-13 439865-3-54-01 SJR2C Loop Trail (Spruce Creek Rd.) From South of Selin Circle to Herbert Street.**

After review and analysis of the responsive bid submittals, City Staff has made a recommendation to award to:

Masci General Contractor, Inc.

Respectfully Submitted,

Jill Poolman, NIGP-CPP, CPPO, CPPB, FCCM
Purchasing Manager

"Failure to file a protest within the time prescribed in section 120.57(3), Florida Statutes, or failure to post the bond or other security required by law within the time allowed for filing a bond shall constitute a waiver of proceedings under chapter 120, Florida Statutes." The 72-hour posting requirement will elapse on July 31, 2025 at 9:00 AM EST.

Exhibit A

Port Orange Segment of the St. John's River to Sea (SJR2C) Loop Shared-Use Nonmotorized (SUN) Trail

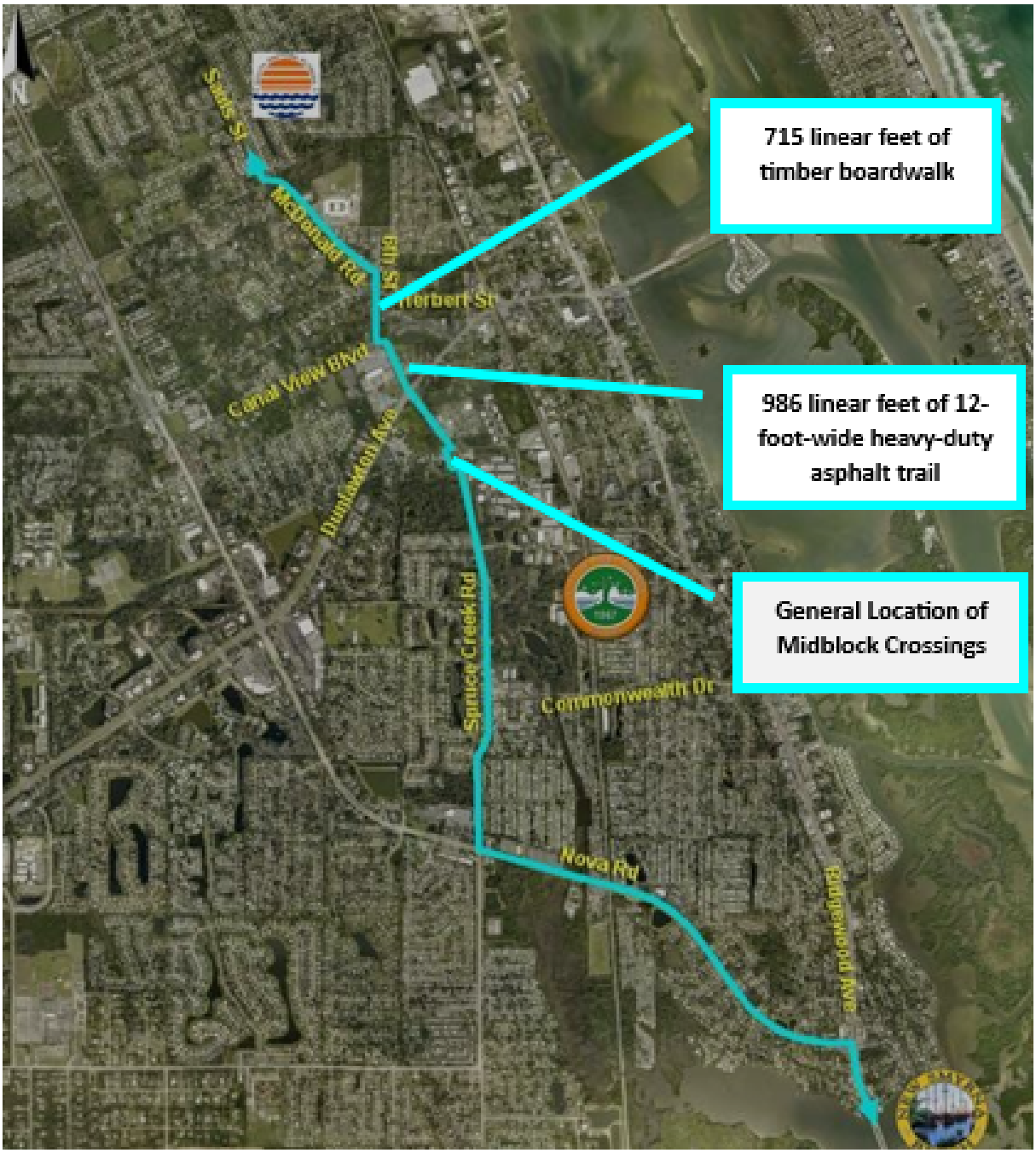

CITY OF PORT ORANGE, FLORIDA

INVITATION TO BID
ITB #25-13
439865-3-54-01 SJR2C Loop Trail (Spruce Creek Rd.) From South of Selin Circle to Herbert Street

City of Port Orange Purchasing Division
Prepared by: Jill Poolman, NIGP-CPP, CPPO, CPPB
Release Date: May 30, 2025

Bid Due Date & Time: July 2, 2025 @2:30 PM

City of Port Orange, Florida
1000 City Center Circle, Port Orange, FL 32129
(386) 506-5718
purchdiv@port-orange.org; www.port-orange.org

Legal Notice to Proposers

ITB #25-13

439865-3-54-01 SJR2C Loop Trail (Spruce Creek Rd.) From South of Selin Circle to Herbert Street

Notice is hereby given that the City of Port Orange is soliciting bids for **ITB #25-13 439865-3-54-01 SJR2C Loop Trail (Spruce Creek Rd.) From South of Selin Circle to Herbert Street.** Bids will be accepted in the City Clerk's office, Port Orange City Hall, 1000 City Center Circle, Port Orange, Florida 32129 until **2:30 PM Eastern Standard Time (EST) on July 2, 2025** which may be amended by addendum issued by the City. All untimely bids will not be considered and will be returned to the bidder unopened. All bids will be evaluated to ensure they contain all required forms in order to deem the bidder responsive or non-responsive. **Bids will be opened and read aloud at 2:30 PM EST in Council Chambers.**

There will be a mandatory Pre-Bid Conference and site visit for the project at **10:00 AM EST** on **June 6, 2025** at City Hall, Council Chambers (1st floor), 1000 City Center Circle, Port Orange, FL 32129. **All prospective Bidders must attend the meeting and site visit. Only Bidders attending the mandatory Pre-Bid Conference and site visit will be eligible to submit a Bid.** All attendees to the mandatory Pre-Bid Conference and site visit must sign in. The representative of each Bidder shall be an authorized employee of the Bidder and MUST sign in accordingly. Bidders are urged to obtain bid documents and familiarize themselves with the documents prior to the Pre-Bid Conference.

A Bid Guarantee in the form of a Bid Bond executed by the bidder and an acceptable surety or a certified check or bank draft payable to the City of Port Orange, Florida in an amount equal to five percent (5%) of the proposed bid must be submitted with each bid. If awarded, the Bidder must be able to obtain both payment and performance bonds equal to one hundred percent (100%) of project value from a surety company licensed in Florida and must submit proof of their present bonding capacity with their submitted bid package in the form of a current (not older than 3 months) letter from bidder's bonding agent. Bidder's failure to include the bonding capacity letter with bid package may result in rejection of bidder's submittal.

DESCRIPTION: The SJR2C Loop Trail (Spruce Creek Rd) project is within the City of Port Orange. The project is a Shared use path (SUNTrail) from south of Selin Circle to Herbert Street. This segment, of the much larger trail system, begins south of the intersection of Spruce Creek Road and Selin Circle. The 8-foot-wide concrete trail of 240 linear feet will extend northerly along the west side of Spruce Creek Road towards Oak Street utilizing a portion of the existing 8 feet concrete sidewalk and will continue along the east side of Halifax Canal from Oak Street to Dunlawton Avenue utilizing the existing 8-foot-wide trail for 1,190 linear feet. 986 linear feet of 12-foot-wide heavy-duty asphalt trail will then continue along Spruce Creek Road from Dunlawton Avenue to Canal View Boulevard. 715 linear feet of 8-foot boardwalk continues through a vacant city-owned parcel from Canal View Boulevard to 120 feet South of Herbert Street. The last segment will be 120 linear feet of 8-foot-wide concrete sidewalk connecting to the existing trail segment. Total project length is approximately 0.671 miles.

The project is funded by Shared-Use Nonmotorized (SUN) Trail Program, Florida Department of Transportation through State Funded Grant Agreement. Prime contractor is to be prequalified in the work class: Sidewalk and Flexible Pavement. There shall be no preference given to Bidders regarding the location of the physical address of the Bidder's place of business.

Bidders must be a commercial entity licensed to do business in the State of Florida and perform the services identified herein. Bidders must be properly registered and licensed to provide the services identified in the scope of work by all applicable state and local agencies.

All bids are solicited and shall be made pursuant to the Code of Ordinances, City of Port Orange, Chapter 2, Article VI, Division 2, Section 2-263, and all bids will be evaluated in accordance with Chapter 2, Article VI, Division 2, Section 2-266. Code of Ordinances, City of Port Orange is on file in the Office of the City Clerk, City Hall, 1000 City Center Circle, Port Orange, Florida 32129 and at www.municode.com .

Copies of the bid documents, requirements, scope of service and all other pertinent information necessary to submit a complete package may be obtained electronically from the City of Port Orange Purchasing web page at www.port-orange.org/bids.aspx and DemandStar via their website at www.demandstar.com.

All questions shall be directed **in writing** to Jill Poolman, Purchasing Manager @jpoolman@port-orange.org and purchdiv@port-orange.org and reference "Questions on **ITB #25-13 - 439865-3-54-01 SJR2C Loop Trail (Spruce Creek Rd.) From South of Selin Circle to Herbert Street.**" in the subject line. **Last day for questions will be June 13, 2025 by 5:00 PM EST.**

The Cone of Silence begins with the issuance of the solicitation document and continues until City Council meets to make a final decision on an award. During this time bidders, suppliers, contractors and sub-contractors are prohibited from all communications regarding the solicitation with City staff, City consultants, City legal counsel, City agents, or elected officials. Any bidder who initiates any discussions or attempts to influence a member or members of the aforementioned shall be disqualified from continued participation in the procurement process with regard to that particular solicitation. While the Cone of Silence is in effect, all communications from potential bidders, suppliers, contractors and sub-contractors must be directed to the Purchasing Division @purchdiv@port-orange.org .

Cut along the outer border and affix this label to the outside of your sealed bid envelope/package to identify it as a "Sealed Bid". Be sure to include the name of the company submitting the bid where requested.

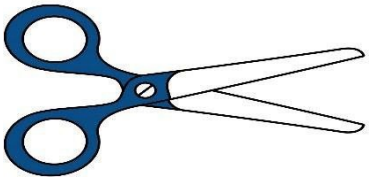

SEALED BID – DO NOT OPEN

SEALED BID NO.: **ITB #25-13**

BID TITLE: **439865-3-54-01 SJR2C Loop Trail (Spruce Creek Rd.) From South of Selin Circle to Herbert Street**

DUE DATE/TIME: **JULY 2, 2025 BY 2:30 PM EST**

SUBMITTED BY: _____
(Name of Company)

BIDDER'S ADDRESS: _____

_____

DELIVER TO: **CITY OF PORT ORANGE CITY CLERK'S OFFICE**
ATTN: JILL POOLMAN, NIGP-CPP, CPPO, CPPB
PURCHASING DIVISION
1000 CITY CENTER CIRCLE
PORT ORANGE, FL 32129

DATE/TIME RECEIVED:_____
(To be stamped by Clerk's Office)

Contents

SECTION 1 – PURPOSE AND OVERVIEW 5
SECTION 2 – INSTRUCTIONS TO BIDDERS 5
SECTION 3 – SCOPE OF WORK 8
SECTION 4 – STANDARD PURCHASE DEFINITIONS 9
SECTION 5 – GENERAL TERMS AND CONDITIONS 12
SECTION 6 – SPECIAL REQUIREMENTS/INSTRUCTIONS 30
SECTION 7 – REQUIRED FORMS 33
FORM 7.1 – BID SUBMITTAL CHECKLIST 33
FORM 7.2 – BIDDER'S ACKNOWLEDGEMENT FORM 34
FORM 7.3 – ADDENDUM AND CHANGE ORDER PROCEDURE ACKNOWLEDGEMENT 35
FORM 7.4 – DRUG-FREE PREFERENCE STATEMENT 36
FORM 7.5 – SWORN STATEMENT ON PUBLIC ENTITY CRIMES 37
FORM 7.6 – STATEMENT OF BIDDER'S QUALIFICATIONS 38
FORM 7.7 – PROFESSIONAL REFERENCES FOR PREVIOUS EXPERIENCE 39
FORM 7.8 – LISTING OF SUBCONTRACTORS 41
FORM 7.9 – SCRUTINIZED COMPANIES CERTIFICATION 42
FORM 7.10 – E-VERIFY AFFIDAVIT 43
FORM 7.11 – AFFIDAVIT OF COMPLIANCE WITH SECTION 287.138, FLORIDA STATUTES 44
FORM 7.12 – NO SUBMITTAL RESPONSE FORM 45
(ATTACHMENT 1) – SCHEDULE OF UNIT PRICING 46
AFFIDAVIT REGARDING LABOR AND SERVICES. 48
BID BOND 49
PERFORMANCE AND PAYMENT BOND (for informational purposes only) 51
LEASED EMPLOYEE AFFIDAVIT (for informational purposes only) 53
AFFIDAVIT REGARDING WORKERS' COMPENSATION (for informational purposes only) 54
CITY OF PORT ORANGE CONTRACT DOCUMENTS (for informational purposes only) 55

EXHIBIT 1 - SPECIFICATIONS 145
EXHIBIT 2 - ENVIRONMENTAL PERMITS 152

SECTION 1 – PURPOSE AND OVERVIEW

The purpose of this Invitation to Bid (ITB) is to solicit competitive sealed bids from Firms or Companies (Bidders) for constructing shared use path (SUNTrail) from south of Selin Circle to Herbert Street. This segment, of the much larger trail system, begins south of the intersection of Spruce Creek Road and Selin Circle. The 8-foot-wide concrete trail of 240 linear feet will extend northerly along the west side of Spruce Creek Road towards Oak Street utilizing a portion of the existing 8 feet concrete sidewalk and will continue along the east side of Halifax Canal from Oak Street to Dunlawton Avenue utilizing the existing 8-foot-wide trail for 1,190 linear feet. 986 linear feet of 12-foot-wide heavy-duty asphalt trail will then continue along Spruce Creek Road from Dunlawton Avenue to Canal View Boulevard. 715 linear feet of 8-foot boardwalk continues through a vacant city-owned parcel from Canal View Boulevard to 120 feet South of Herbert Street. The last segment will be 120 linear feet of 8-foot-wide concrete sidewalk connecting to the existing trail segment. Total project length is approximately 0.671 miles.

It is the intent and purpose of the City of Port Orange (City) that this Invitation to Bid promotes competitive selection. It shall be the Bidder's responsibility to advise the Purchasing Division of any language, requirements, etc. or any combination thereof that inadvertently restricts or limits the requirements stated in this ITB to a single source.

READ THIS ENTIRE DOCUMENT CAREFULLY. FOLLOW ALL INSTRUCTIONS. YOU ARE RESPONSIBLE FOR FULFILLING ALL REQUIREMENTS AND SPECIFICATIONS. BE SURE YOU UNDERSTAND THEM.

SECTION 2 – INSTRUCTIONS TO BIDDERS

Bidders desiring to provide services, as described herein shall submit sealed bids, including one (1) original and one (1) digital (flash drive) version in PDF format, in conformance with the detailed submittal instructions.

TIMELINE (Eastern Standard Time)

The City reserves the right to alter dates as needed.

DESCRIPTION	DATE
Date of Distribution	May 30, 2025
Mandatory Pre-Bid Conference	June 6, 2025 @10:00 AM
Deadline for Questions	June 13, 2025 by 5:00 PM
Addendum Posting (If needed)	June 20, 2025
Bids Due	July 2, 2025 by 2:30 PM
City Council Meeting for Approval of Recommendation of Award	To Be Determined

Bids must be delivered in a sealed envelope/package and delivered to:

City of Port Orange City Clerk's Office
Attn: Jill Poolman, NIGP-CPP, CPPO, CPPB
Purchasing Division
1000 City Center Circle
Port Orange, FL 32129

Sealed bids must be delivered no later than the date and time listed in the Timeline above. All times referenced are local time. Bids shall be sealed and bidders shall clearly indicate on the outside of their bid the following:

a. Invitation to Bid (ITB) Number and Title
b. Date of Opening
c. Name of Bidder
d. Address of Bidder

Due to the timing of mail service, the City cautions bidders to ensure actual delivery of bids to the City prior to the deadline set for receiving bids. Carrier and hand deliveries of bids will be accepted in the City Clerk's Office, Port Orange City Hall, 1000 City Center Circle, Port Orange, Florida 32129 until the date and time referenced in the Timeline above or as amended by addendum issued by the City. Bids received after the established deadline shall not be considered.

Bidders are cautioned that they are responsible for delivery to the specific location cited above. Therefore, if your bid, proposal, statement or quotation is delivered by an express mail carrier or by any other means, it is your responsibility to ensure delivery to the above address. The City will not be responsible for deliveries made to any place other than the specified address.

Offers by telephone or email shall not be accepted. Also, bidders are instructed NOT to fax their bid package. **Faxed bids will be rejected as non-responsive regardless of where or when the fax is received.**

All bids will be opened publicly, and the names of all bidders shall be read aloud. All conferences and meetings regarding this ITB are recorded electronically (audio only). The City of Port Orange reserves the right to reject any or all bids or parts of bids if it is in the best interest of the City.

PRE-BID CONFERENCE

There will be a mandatory Pre-Bid Conference and site visit on the date and time referenced in the Timeline above at City Hall, Council Chambers (1st Floor), 1000 City Center Circle, Port Orange, Florida 32129. **All prospective Bidders must attend the meeting and site visit. Only Bidders attending the mandatory Pre-Bid Conference and site visit will be eligible to submit a Bid.** All attendees to the mandatory Pre-Bid Conference and site visit MUST sign in. The representative of each Bidder shall be an authorized employee of the Bidder and must sign in accordingly.

QUESTIONS

All questions shall reference **"ITB #25-08 - 439865-3-54-01 SJR2C Loop Trail (Spruce Creek Rd.) From South of Selin Circle to Herbert Street"** in the subject line. All questions concerning this ITB shall be submitted in writing no later than the date and time referenced in the Timeline above to:

Jill Poolman, Purchasing Manager
1000 City Center Circle
Port Orange, FL 32129
jpoolman@port-orange.org and
purchdiv@port-orange.org

ADDENDA

The City will issue responses to inquiries and any other corrections or amendments it deems necessary in written addenda issued prior to the bid due date. Bidders should not rely on any representations, statements or explanations other than those made in this ITB or in any addendum to this ITB. Where there appears to be a conflict between the ITB and any addenda issued, the last addendum issued will prevail. The bidder should verify prior to submitting a bid that all addenda have been received. Bidders should acknowledge the correct number of addenda received as part of their bids. All addenda will be published on the City Purchasing web page at www.port-orange.org/bids.aspx and the DemandStar website at www.demandstar.com.

The City of Port Orange reserves the right to consider the omission of an acknowledgment of addendum as cause for rejection of the ITB submittal.

This provision exists solely for the convenience and administrative efficiency of the City of Port Orange. No bidder or other third party gains any rights by virtue of this provision or the application thereof, nor shall any bidder or third party have any standing to sue or cause of action arising therefrom.

CLARIFICATIONS

It is the bidder's responsibility to become familiar with and fully informed regarding the terms, conditions and specifications of this ITB. Lack of understanding and/or misinterpretation of any portions of this ITB shall not be cause for withdrawal of your bid after opening or for subsequent protest of award.

MINIMUM QUALIFICATIONS

Bidders shall be licensed to do business in the State of Florida. Submit Sunbiz report showing your company registered as "Active".

Prime contractor is to be prequalified in the work class: Sidewalk and Flexible Paving.

Bidders must provide a minimum of three (3) verifiable references from similar scopes of work as identified in this ITB on the provided "Professional References" form. Failure to provide verifiable references may cause the bidder to be deemed non-responsive. **The City of Port Orange is not to be used as a reference.**

NO LOBBYING

All bidders are hereby placed on notice that the City of Port Orange Council, City Employees/Staff, nor Members of the Evaluation Committee (with the exception of the City of Port Orange Purchasing Division personnel designated to receive requests for interpretations or corrections) are not to be lobbied, directly or indirectly either individually or collectively, regarding this ITB. During the entire procurement process, all bidders and their subcontractors, sub-consultants, or agents are hereby placed on notice that they are not to contact any persons listed above for such purposes as holding meetings of introduction, dinners, etc. if they intend to submit or have submitted Bids for this project. Any bidder contacting individuals mentioned herein in violation of this warning may automatically be disqualified from further consideration for this ITB.

SCHEDULE OF UNIT PRICING

Schedule of Unit Pricing is to be completed as directed and without modification and returned as part of the ITB submittal prior to the ITB deadline for submission. Failure to fill out the Schedule of Unit Pricing as directed and without modification may negatively affect the evaluation of your bid. If the City has a need to revise the Schedule of Unit Pricing prior to the bid submittal deadline, it will do so in a published addendum. If the City does revise the Schedule of Unit Pricing, bidders **must** complete and return the City issued revised version of the Schedule of Unit Pricing. If bidder does NOT complete and return the City issued revised version of the Schedule of Unit Pricing their bid submittal will be deemed non-responsive.

EXCEPTIONS TO SPECIFICATIONS

If taking exception to any portion of the ITB specifications, the bidder must indicate those exceptions as stated on the Bidder's Acknowledgement Form (7.2).

BID SUBMISSION AND WITHDRAWAL

Unless otherwise specified, bidder shall use the forms supplied by the Purchasing Division. Bids, once opened, become the property of the City, cannot be withdrawn, and will not be returned to the bidders. Upon opening, bids become subject to public disclosure in accordance with Chapter 119, Florida Statutes.

CORRECTION OF BIDS

Correction of inadvertently erroneous bids shall be permitted up to the time of ITB opening. Bidders shall not be allowed to modify their bids after the opening time and date.

WITHDRAWAL OF BIDS

NO bid shall be withdrawn for a period of one-hundred-twenty (120) days subsequent to the bid opening without the consent of the City of Port Orange. Negligence on the part of the bidder in preparing their bid confers no right of withdrawal or modification after the bid has been opened at the appointed time and place by the City of Port Orange. Any such withdrawn bid shall not be resubmitted.

OPENING OF BIDS

Bids will be received until the date and time stated in this ITB and will be publicly opened and read at the place, time and date stated. The City bears no responsibility for the premature opening of a bid not properly addressed and identified.

LITIGATION HISTORY

The City will consider a bidder's litigation history information in its review and determination of responsibility. All bidders are required to disclose to the City all "material" cases filed, pending, or resolved during the last five (5) years prior to the solicitation response due date, whether such cases were brought by or against the bidder, any parent or subsidiary of the bidder, or any predecessor organization. If the bidder is a joint venture, the information provided should encompass the joint venture (if it is not newly formed for purposes of responding to the solicitation) and each of the entities forming the joint venture. Although the review of a bidder's litigation history is an issue of responsibility, the failure to provide litigation history as required in the Evaluation Criteria may result in a recommendation of non-responsive by the Purchasing Manager.

DEBARMENT HISTORY

The City will consider a bidder's debarment history information in its review and determination of responsibility. All bidders are required to disclose to the City all cases of debarment filed, pending, or resolved by the City or other public entity during the last five (5) years prior to the solicitation response due date, whether such actions were brought by or against the bidder, any parent or subsidiary of the bidder, or any predecessor organization. If the bidder is a joint venture, the information provided should encompass the joint venture (if it is not newly formed for purposes of responding to the solicitation) and each of the entities forming the joint venture. Although the review of a bidder's debarment history is an issue of responsibility, the failure to provide debarment history as required on the Certification Regarding Debarment, Suspension and Other Responsibility (contained herein) may result in a recommendation of non-responsive by the Purchasing Manager.

REJECTION OF BIDS

The City reserves the right to reject any and/or all bids when such rejection is in the best interest of the City.

BIDS MAY BE REJECTED AND/OR BIDDER(S) DISQUALIFIED FOR THE FOLLOWING REASONS:

(a) Failure to update the information on file including address, product, service or business descriptions.
(b) Failure to perform according to contract provisions.
(c) Conviction in a court of law of any criminal offense in connection with the conducting of business.
(d) Evidence of a violation of any federal or state antitrust law based on the submission of bids or proposals, or the awarding of contracts.
(e) Evidence that the bidder has attempted to give a City employee a gratuity of any kind for the purpose of influencing a recommendation or decision in connection with any part of the City's purchasing activity.
(f) Other reasons deemed appropriate by the City.

OWNERSHIP OF DOCUMENTS

All documents resulting from this solicitation will become the sole property of the City of Port Orange. The bidder must meet all requirements for retaining public records and transfer, at no cost, to the City all public records in the possession of the Bidder upon termination of this Agreement and destroy any duplicate public records that are exempt or confidential and exempt from public records disclosure requirements. All records stored electronically must be provided to the City in a format that is compatible with the information technology systems of the City.

AMERICANS WITH DISABILITIES ACT (ADA)

If you need special services provided under the Americans with Disabilities Act, contact the ADA Coordinator in our Human Resources office at 386-506-5560 at least 48 hours before the scheduled event.

REQUIRED DOCUMENTS FOR AWARDED BIDDER

The awarded bidder shall return all the required post-award documents within 10 days after the issuance of the Notice of Intent to Award in order to execute the contract.

SECTION 3 – SCOPE OF WORK

CONTRACT TERM/COMPLETION TIME

The date of commencement of the Work shall be fixed in a notice to proceed issued by the City. The contractor shall achieve Substantial Completion of the Work not later than two hundred forty-six **(246)** calendar days from the notice to proceed and Final Completion two hundred seventy **(270)** calendar days from the notice to proceed.

SCOPE OF WORK

For additional information regarding the scope of work, please refer to the following files that are posted as separate documents:

- Timber Boardwalk Structural Design Calculations
- SJR2C Loop Trail (Spruce Creek Rd.) Plans
- SJR2C Loop Trail (Spruce Creek Rd.) Lighting Plans

The SJR2C Loop Trail (Spruce Creek Rd) project is within the City of Port Orange. The project is a Shared use path (SUNTrail) from south of Selin Circle to Herbert Street. This segment, of the much larger trail system, begins south of the intersection of Spruce Creek Road and Selin Circle. The 8-foot-wide concrete trail of 240 linear feet will extend

northerly along the west side of Spruce Creek Road towards Oak Street utilizing a portion of the existing 8 feet concrete sidewalk and will continue along the east side of Halifax Canal from Oak Street to Dunlawton Avenue utilizing the existing 8-foot-wide trail for 1,190 linear feet. 986 linear feet of 12-foot-wide heavy-duty asphalt trail will then continue along Spruce Creek Road from Dunlawton Avenue to Canal View Boulevard. 715 linear feet of 8-foot boardwalk continues through a vacant city-owned parcel from Canal View Boulevard to 120 feet South of Herbert Street. The last segment will be 120 linear feet of 8-foot-wide concrete sidewalk connecting to the existing trail segment. Total project length is approximately 0.671 miles.

The selected qualified Contractor will be responsible for the construction of:

- 8-foot-wide concrete trail of 240 linear feet beginning south of the intersection of Spruce Creek Road and Selin Circle and extending northerly along the west side of Spruce Creek Road towards Oak Street
- 986 linear feet of 12-foot-wide heavy-duty asphalt trail along Spruce Creek Road from Dunlawton Avenue to Canal View Boulevard
- 715 linear feet of 8-foot boardwalk through a vacant city-owned parcel from Canal View Boulevard to 120 feet South of Herbert Street
- 120 linear feet of 8-foot-wide concrete sidewalk from the boardwalk to Herbert Street

Three midblock crossings at Selin Circle, Oak Street and Herbert Street will be installed with Rectangular Rapid Flashing Beacon (RRFB) signals and lighting will be added at these three locations. The scope of work will include installation of a pedestrian pole with LED countdown at the intersection of Dunlawton Avenue and Spruce Creek Road.

The timber pedestrian boardwalk and associated gravity walls will also be installed with lighting for safety purposes. Drainage improvements include extending pipes, mitered end sections, inlet modifications and installation of an inline check valve.

Other construction elements include mobilization, maintenance of traffic, erosion control, clearing and grubbing, regular and subsoil excavation, embankment (to include surcharge), and sod. Pipe handrail-guiderail is installed where drop off is greater than 5 feet.

All pedestrian facilities shall adhere to current American with Disabilities Act (ADA) standards. Utility coordination will be required during construction and utility work schedules have been developed. Environmental permitting is acquired and attached as exhibits.

Road shoulder and lane closures are anticipated. The contractor is to be responsible for execution of Temporary Traffic Control Plan (TTCP) as shown in the construction drawings and determining the need for lane closures.

SECTION 4 – STANDARD PURCHASE DEFINITIONS

The City will use the following definitions in instructions to Bidders, terms and conditions, special provisions, technical specifications and any other solicitation documents.

1. **Addendum** is a formal written document, released prior to the public opening that modifies any aspect of a Solicitation. Plural: Addenda
2. **Alternate Bid** means multiple bids with substantive variations from the same Bidder in response to a Solicitation.
3. **Amendment** is a formal written agreement, signed by both parties, that modifies an existing contractual agreement.
4. **Appropriate, Appropriated, or Appropriation** means the adoption by the City Council of the City of a budget fora fiscal year that includes payments to be made under the Contract during the respective fiscal year.
5. **Best Value** means the highest overall value to the City based on factors that include, but are not limited to, price, quality, design, and workmanship.
6. **Bid** is a complete, properly signed response to an Invitation to Bid, which if accepted, would bind the Bidder to perform the resultant Contract.
7. **Bid Guaranty (Bid Bond)** guarantees that the Bidder (a) will not withdraw the bid within the period specified for acceptance, and (b) will execute a Contract and furnish required bonds and any necessary insurance within the time specified in the Solicitation, unless a longer time is allowed by the City. The guarantee will be returned to the Bidder upon execution of a Contract

8. **Bidder or Proposer** is a person, firm, or entity that that submits a Response to a Solicitation. Any Bidder/Proposer may be represented by an agent after submitting evidence demonstrating the agent's authority. The agent cannot certify as to his own agency status.
9. **City** means the City of Port Orange.
10. **Competitive Negotiation** means a method for acquiring goods, services, and construction for public use in which discussions or negotiations may be conducted with responsible offerers who submit Responses through a Request for Proposals, Request for Statements of Qualifications, or Invitation to Negotiate.
11. **Competitive (Formal) Solicitation** is the process of requesting and receiving two or more sealed bids, proposals, statements of qualifications or replies submitted by responsive Bidders/Proposers in accordance with the terms of a competitive process, regardless of the method of procurement.
12. **Competitive Range** means the responsive submissions that meet the evaluation criteria and are considered to be reasonably susceptible of award.
13. **Construction** means the process of building, repairing, improving, and alterations, conversion or extension of building, parks, utilities, streets or other improvements or alterations to real property.
14. **Contract** is a written agreement or purchase order issued for the purchase of goods or services.
15. **Contractor** means the person, firm or entity selling goods or services to the City under a Contract.
16. **Deliverables** means the goods, products, materials, and/or services to be provided to the City by a Bidder.
17. **Due Date** means the date and time specified for receipt of Responses to a Solicitation.
18. **End User** is a person, program, agency, or other eligible user who uses a contract to purchase a commodity or contractual service.
19. **Evaluation Committee/Team** is a temporary group of City personnel who are responsible for the evaluation of proposals, statements of qualifications or replies as part of a Request for Proposals (RFP), Request for Submission of Qualifications (RFSQ), or Invitation to Negotiate (ITN), or competitive grant process.
20. **Evaluator** is a member of the evaluation committee/team.
21. **Goods** are supplies, materials, or equipment.
22. **Intent to Award** is a document, published on DemandStar, that informs the public and respondents of the City's decision to award a contract pursuant to a previously issued competitive solicitation.
23. **Invitation to Bid (ITB) or Bid** means a formal request to prospective Bidders requesting pricing for a specified Good or Service which has been advertised for bid in a newspaper.
24. **Invitation to Negotiate (ITN)** means a formal request to prospective proposers requesting proposed specifications and pricing of a product and/or service which has been advertised for replies in a newspaper.
25. **Issues** means points, matters, or concerns to be addressed during negotiations.
26. **Lead Negotiator** is the negotiator responsible for leading and facilitating the formal negotiation discussions and selecting other required negotiation team members. Is often the "driver of change" and seeks alternatives/options.
27. **Lowest Responsible Bid** means the responsive bid meeting all requirements of the specifications, terms, and conditions of the Invitation to Bid resulting in the lowest cost to the City in a total cost concept or based solely on price, taking into consideration the financial and practical ability of the Bidder to perform the Contract, past performance of the Bidder, and compliance with all City ordinances concerning the purchasing process.
28. **Lowest Responsible Bidder** means the Bidder submitting lowest responsible bid.
29. **Negotiation Team** is a temporary group of City personnel who are responsible for negotiations as part of an Invitation to Negotiate (ITN).
30. **Negotiator** is a member of the negotiation team.
31. **Non-Professional Services** are services performed that are not of a professional nature such as lawn care, security, janitorial, etc.
32. **Offer** means a complete signed Response submitted to the City in response to a Solicitation including, but not limited to, a bid submitted in response to an Invitation to Bid, a Proposal submitted in response to a Request for Proposal, a Quote submitted in response to a Request for Quotation, a Statement of Qualifications and interest submitted in response to a Request for Statements of Qualifications, or a Reply submitted in response to an Invitation to Negotiate.
33. **DemandStar** is the official online repository for all City competitive solicitations.
34. **Outlier** is a bid, offer, or proposal which is determined by the Purchasing Director or Manager to be significantly dissimilar to or inconsistent with, competing bids or offers.
35. **Pre-Bid/Proposal/Statement/Reply Conference** means a meeting conducted by the Purchasing Office, held in order to allow Bidders/Proposers to ask questions about the proposed Contract and particularly the Contract specifications with the City department requesting the goods/services.

36. **Price Analysis** is an evaluation of the total cost of a contract in order to determine if the price is reasonable.
37. **Procurement (Process)** is a term used in the governmental sector for the combined functions of acquiring (purchasing) needed goods and/or services, receiving and inspection, inventory management, contract administration, and disposal/surplus.
38. **Professional Services** means those services within the scope of the practice of architecture, professional engineering, landscape architecture, or registered surveying and mapping, as defined by the laws of the state, or those performed by any architect, professional engineer, landscape architect, or registered surveyor and mapper in connection with his or her professional employ mentor practice.
39. **Protest** is a formalized process by which respondents have an opportunity to challenge a procurement practice or contract award.
40. **Proposal** is a complete, properly signed Response to a Request for Proposal, based on performance that is offered rather than on that of price alone, which if accepted, would bind the Proposer to perform the resultant Contract.
41. **Purchase Order** is an order placed by the Purchasing Division for the purchase of Goods or Services written on the City's standard Purchase Order form and which, when accepted by the Bidder, becomes a contract. The Purchase Order is the Bidder's authority to deliver and invoice the City for Goods or Services specified, and the City's commitment to accept the Goods or Services for an agreed upon price.
42. **Request for Proposal (RFP)** means a formal request to prospective proposers requesting qualifications of the proposer and pricing for a specified Good or Service which has been advertised for Proposal in a newspaper.
43. **Request for Statement of Qualifications (RFSQ)** means a formal request to prospective proposers requesting statements of qualifications pursuant to Florida Statute 287.055 "Consultant's Competitive Negotiation Act" which has been advertised for Statement in a newspaper.
44. **Respondent** means an entity that has (or will, i.e. "prospective respondents") submitted a response to a competitive solicitation conducted to create a contractual relationship for the provision of commodities or services.
45. **Response/Submission** means all materials submitted to the City by a respondent as part of a solicitation. A response may be called a bid, proposal, statement of qualifications, or a reply, depending on the type of competitive solicitation being issued.
46. **Responsible (Bidder)** is a Bidder who has the capability in all respects to fully perform the contract requirements and the integrity and reliability that will assure good faith performance.
47. **Responsive (Bidder)** is a Bidder that has submitted a bid, proposal, statement of qualifications, or reply that conforms in all material respects to the solicitation.
48. **Scope** means the extent of the area or subject matter that something deals with or to which it is relevant.
49. **Scope of Work** means a description of the work activities, deliverables, and/or timeline that a Bidder must execute in terms of delivering specific commodities or in performance of contractual services.
50. **Services** include all work or labor performed for the City on an independent contractor basis other than construction.
51. **Solicitation** means a formal request, as applicable, for prospective Bidders/Proposers to submit responses to an Invitation to Bid, Request for Proposal, Request for Qualifications, Invitation to Negotiate, or a Request for Quotation.
52. **Solicitation Document** means a document, or collection of documents, either paper or electronic, that contains all information required to conduct a competitive procurement project according to § 287.057, Florida Statutes.
53. **Stakeholder** means an individual, who is not likely to become a supplier, who has an interest in the commodities/contractual services needed.
54. **Subcontractor** means a person, firm or entity providing goods or services to a Bidder/Proposer to be used in the performance of the Bidder/Proposer's obligations under the Contract.
55. **Subject Matter Expert** means a person who has working or expert knowledge about a particular topic or field.
56. **Unbalanced Bid** means a bid that is based on prices which are significantly less than cost for some bid items and significantly more than cost for others.

SECTION 5 – GENERAL TERMS AND CONDITIONS

These terms and conditions are standard for all contracts for commodities or services issued through the City of Port Orange Purchasing Division. These General Terms and Conditions apply to all advertised Solicitations; however, said terms and conditions **may be superseded, in whole or in part, by Section 6, SPECIAL REQUIREMENTS/ INSTRUCTIONS.**

1. **ACCEPTANCE BY CITY**

   The City shall have a reasonable time (but not less than 30 days) after receipt to inspect the goods and services tendered by the bidder. The City at its option may reject all or any portion of such goods or services which do not, in City's sole discretion, comply in every respect with all terms and conditions of the contract. The City may elect to reject the entire goods and services tendered even if only a portion thereof is nonconforming. If the City elects to accept nonconforming goods and services, the City, in addition to its other remedies, shall be entitled to deduct a reasonable amount from the price thereof to compensate the City for the nonconformity. Any acceptance by the City, even if non-conditional, shall not be deemed a waiver or settlement of any defect in such goods and services. The material delivered as a result of this solicitation shall remain the property of the seller until a physical inspection and actual usage of the item(s) is made and thereafter deemed acceptable to the satisfaction of the City, in compliance with the terms and specifications contained herein. In the event that the item(s) supplied to the City is/are found to be defective, or does/do not conform to specifications, the City reserves the right to cancel the order upon written notice to the seller and return the item(s) to the seller at the seller's expense.

2. **ADDENDA**

   When specifications are revised, the City of Port Orange Purchasing Division will issue an addendum addressing the nature of the change. Bidders must acknowledge all addenda by completing Form 7.3 *Addendum and Change Order Procedure Acknowledgement* and include it in the returned response package. Failure to acknowledge the correct number of addenda issued may result in rejection of the response. It is the responsibility of the Bidder to ensure all addenda have been received prior to submitting a bid. All addenda shall be posted by the City on DemandStar at www.demandstar.com and the City of Port Orange Purchasing web page at https://www.port-orange.org/bids.aspx. The City shall issue responses to inquiries and any other corrections or amendments it deems necessary in written addenda issued prior to the solicitation response due date. Bidders should not rely on any representations, statements or explanations other than those made in this solicitation or in any addendum to the solicitation. Where there appears to be a conflict between the solicitation and any addenda issued, the last addendum issued shall prevail.

3. **ADDITIONAL GOODS**

   Products, materials and goods not specifically identified in this bid request may be added to any resultant contract upon mutual consent of the contracting parties. The City reserves the right to add or delete products or materials of similar nature, within the family of products of "ITB Item(s)" and their commodity codes, to those items requested in this bid.

4. **ANTI-COLLUSION STATEMENT**

   By submitting a response to a formal solicitation, the bidder affirms that this response is without previous understanding, agreement, or connection with any person, business, or corporation submitting a response for the same materials, supplies, or equipment, and that the response is in all respects fair, and without collusion or fraud. Additionally, bidder agrees to abide by all conditions of this solicitation and certifies that he/she is authorized to sign the response for the bidding company/firm. In submitting a response to the City of Port Orange, the bidder offers and agrees that if the response is accepted, the bidder shall convey, sell, assign or transfer to the City of Port Orange all rights, title and interest in and to all causes of action it may now or hereafter acquire under the Anti-trust laws of the United States and the State of Florida for price fixing relating to the particular commodities or services purchased or acquired by the City of Port Orange. At the City's discretion, such assignment shall be made and become effective at the time the City tenders final payment to the bidder.

5. **APPLICABLE LAWS**

   In connection with the furnishing of supplies or performance of work under the contract, the bidder agrees to comply with the Fair Labor Standards Act, Equal Opportunity Employment Act, and all other applicable federal and state laws, regulations and executive orders to the extent that the same may be applicable.

6. **ASSIGNMENT**

The successful bidder shall not sell, assign, transfer or convey this contract in whole or in part, without the prior written consent of the City of Port Orange. Any such assignment or transfer shall not release the bidder from all contractual obligations.

7. **AUTHORITY TO CONDUCT BUSINESS IN FLORIDA**

A Florida corporation or partnership is required to provide evidence with its response that it is authorized to transact business in Florida and is in good standing with the Florida Department of State. If not with its response, such evidence must be submitted to the City no later than five (5) business days from request of the Purchasing Manager.

A foreign (out-of-state) corporation or partnership is required to provide evidence with its response that it is authorized to transact business in Florida and is in good standing with the Florida Department of State. If not with its response, such evidence must be submitted to the City no later than five (5) business days from request of the Purchasing Manager.

A joint venture is required to provide evidence with its response that it, or at least one of the joint venture partners, is authorized to transact business in Florida and is in good standing with the Florida Department of State. If not with its response, such evidence must be submitted to the City no later than five (5) business days from request of the Purchasing Manager. However, the joint venture is required to provide evidence prior to contract execution that the joint venture is authorized to transact business in Florida and provide the City with a copy of the joint venture Agreement. A joint venture is also required to provide with its response a Statement of Authority indicating that the individual submitting the joint venture's proposal has the legal authority to bind the joint venture. If not with its response, such evidence must be submitted to the City no later than five (5) business days from the request of the Purchasing Manager.

8. **AWARDS**

Recommendation for award will be considered by the City of Port Orange City Council at the earliest possible regular meeting subsequent to the evaluation process. This ITB is issued in accordance with and shall be governed by the provisions of the City's Purchasing Manual. The City of Port Orange City Council reserves the right to make award(s) by individual sections, groups, all or none, or a combination thereof, with one or more bidders; to reject any and all proposals, or to waive any informality or technicality in proposals received as deemed to be in the best interest of the City. The City does not award publicly funded contracts to those who knowingly employ unauthorized alien workers in violation of section 274A(e) of the Immigration and Naturalization Act, 8 United States Code s1324a(e). Such employment deprives legal workers of job opportunities. Violation of section 274A(e) shall be grounds for unilateral cancellation of the contract, proposal or quote for purchase of services and goods by the City of Port Orange.

9. **AWARD AND EXECUTION OF CONTRACT**

When a bid received has been determined to be satisfactory, a contract will be awarded, or Purchase Order issued to the lowest responsive and responsible Bidder within the time designated in the contract documents. The bidder(s) to whom the award is made shall execute the contract(s) and return it, together with the properly executed bonds and insurance certificates to the City within the time specified.

10. **BID RETURNS**

Bidders shall return all completed responses to the City of Port Orange at the address set forth in Section 2 of this document on the date and at the time specified. Late submissions will not be accepted and shall be returned to bidders unopened.

11. **BID PROTEST**

Any person who is adversely affected by the City's decision or intended decision shall file with the City Purchasing Manager a notice of protest in writing within 72 hours after the posting of the notice of decision or intended decision. With respect to a protest of the terms, conditions, and specifications contained in a solicitation, including any provisions governing the methods for ranking bids, proposals, statements, or replies, awarding contracts, reserving rights of further negotiation, or modifying or amending any contract, the notice of protest shall be filed in writing within 72 hours after the posting of the solicitation. Saturdays, Sundays, and state holidays shall be excluded in the computation of the 72-hour time established herein. The formal written protest shall be filed with the Purchasing Manager in writing within ten (10) days after the date the notice of protest is filed. The formal written protest shall state with particularity the facts and law upon which the protest is based. Failure to file a notice of protest or failure to file a formal written protest shall constitute a waiver of proceedings. Upon receipt of the formal written protest that has been timely filed, the City shall stop the

solicitation or contract award process until the subject of the protest is resolved by final City action. However, the City may continue the solicitation or award process, provided the City Manager sets forth in writing particular facts and circumstances which require the continuance of the solicitation or contract award process without delay in order to avoid an immediate and serious danger to the public health, safety, or welfare. The City shall provide an opportunity to resolve the protest by mutual agreement between the parties. The policy this City has established is as follows:

a. As soon as possible after receipt, the Purchasing Manager shall provide written bid protest to City Manager, City Attorney, Department Head involved, and Supervisor directly involved in the acquisition.
b. Purchasing Manager shall schedule within seven (7) business days, excluding weekends and holidays, a meeting with the above-mentioned individuals or designee and protestor. The intent of the meeting is to provide a review and/or solution prior to going before Council. After reviewing all relevant information, the City Manager shall render a decision.
c. If the protestor disagrees, he/she may appeal to the City Council at a formal council meeting. After reviewing the evidence, the City Council will issue their decision. The City Council's decision is final; however, the protestor can appeal the decision to the Circuit Court in Volusia County, Florida within thirty (30) days of the City Council's final decision. Decisions at all levels shall be in writing to the protester.

12. **BID TABULATION**

Bidders who wish to receive a copy of the bid tabulation may obtain it via DemandStar at www.demandstar.com or on the City Purchasing web page at www.port-orange.org/bids.aspx.

13. **BIDDER'S PRODUCT OR SERVICES**

The bidder's product (if applicable) delivered to the City shall be free of all liens, claims or encumbrances, and the bidder warrants that it has a clear title to the product being delivered.

a. If the bidder is contracted to provide services, such services shall be fully satisfactory to the City as determined by the City.
b. The bidder shall provide the City with any data, reports or other information as required and requested by the City to enable it to utilize the product or service furnished by the bidder.
c. In furnishing the service or product to the City, the bidder shall comply with all federal, state, county laws, and city rules, regulations and codes and their successors or amendments. Violation of such laws, rules, regulations and codes may be grounds for delaying or reducing the amount due, or in rescinding the contract, proposal or quote.

14. **BONDS**

If this solicitation requires submission of bid guarantee and payment and performance bonds, there will be a separate section explaining those requirements. When the Purchasing Manager deems it necessary, bid bonds/deposits shall be prescribed and are advertised in the public notices inviting bids. Responses submitted without the required bid bond or certified check shall be deemed non-responsive. Normally, if a bid bond/deposit is requested, it is in the amount of five percent (5%) of the bid amount.

Payment and Performance Bonds requested for construction projects shall be in an amount equal to one hundred percent (100%) of the total contract amount which will be recorded by the City, at the contractor's sole cost and expense, with the Clerk of the Circuit Court, Volusia County, Florida. After recording, the City will furnish to the contractor the recording information for the bond to evidence that the contractor has met the requirements of Florida law. The City will bill the cost of recording to the contractor. Unsuccessful respondents are entitled to the return of their bid bond. A successful respondent shall forfeit any surety required by the Purchasing Manager upon failure of the respondent to enter into a contract within the time specified after the award of bid.

15. **CERTIFICATE OF INSURANCE**

Upon issuance of a notice of intent to award, the selected bidder will be required to submit a Certificate of Insurance showing proof of adequate coverage for professional general liability, errors and omissions and workers' compensation as identified under the insurance requirements of this solicitation and listing the City of Port Orange as Additional Insured prior to execution of the contract.

16. **CHANGE ORDERS**

No oral statement of any person shall modify or otherwise change, or affect the terms, conditions or specifications stated in the resulting contract. All change order requests shall be made in writing by the supplier/contractor for review by the Contract Administrator for the City of Port Orange. No work shall be performed as set forth in the change order until the bidder receives an executed Purchase Order for the requested change.

17. **CHANGE ORDER REQUEST NOTIFICATION**

The awarded bidder is responsible for giving the City of Port Orange, prior to the contract expiration date, at least forty-five (45) calendar days of advance notice for any anticipated changes in price greater than $25,000, and any changes in time and/or scope of the awarded contract. The bidder shall not continue to provide services past the contract expiration date unless approved by a written Change Order Notice from the City.

18. **CLEAN UP**

Upon completion of the delivery of materials, the bidder shall restore any/all public and private property which may have been damaged during delivery. Restoration is meant to include removal of any spillage or restoring damage to the edge of pavement, sidewalks, driveways, landscaped areas, etc. Bidder shall make repairs consistent with or better than what existed prior to delivery. This shall be understood to include the use of sod or seed and mulch to replace (if necessary) existing grass that has been damaged. If sod is used it shall match the sod present on the effected property. Bidder shall make all repairs and restorations at his/her expense.

19. **CONDUCT OF BIDDERS**

All bidders or individuals acting on behalf of a bidder are hereby prohibited from lobbying or otherwise attempting to persuade or influence any member of the Evaluation Committee, City Council members, or City staff at any time during the course of the solicitation process. The solicitation process shall end upon issuance of the written staff recommendation (Notice of Intent to Award) for selection of a bidder. All bidders or individuals acting on behalf of a bidder are further prohibited from contacting or otherwise attempting to communicate with any member of the staff, Evaluation Committee or City Council members regarding the pending solicitation or its outcome until after the issuance of the written recommendation of the most qualified Bidder. Until such recommendation is issued in writing, any questions regarding the pending solicitation shall be submitted to the Purchasing Division. Failure to comply with this procedure shall result in rejection/disqualification of said submittal without exception. Contact with staff, City Council members or the Evaluation Committee during a public meeting shall not be considered a violation of this requirement.

20. **CONE OF SILENCE**

The Cone of Silence is designed to protect the integrity of the procurement process by shielding it from undue influences prior to the execution of the award. The Cone of Silence is defined as the period beginning with the issuance of the solicitation document and continues through the execution of the award document. During this time bidders, service providers and the like are prohibited from all communications regarding the solicitation with City staff, City consultants, City legal counsel, City Agents, or elected officials. Any bidder who initiates any discussions or attempts to influence a member or members of the aforementioned shall be disqualified from continued participation in the procurement process with regard to that particular solicitation.

Exceptions to the Cone of Silence:

- Written communication directed to the Procurement Officer;
- All communications occurring at Pre-Proposal Conferences;
- Oral presentations before publicly noticed committee meetings;
- Procurement of goods and services for Emergency situations; and
- Contractors already on contract with the City to perform services for the City are allowed discussions necessary for the completion of an existing contract.

21. **CONFLICT OF INTEREST**

For purposes of determining any possible conflict of interest, all bidders must disclose if any City of Port Orange employee is also an owner, corporate officer, or employee of bidder's business. No official or employee of the City who exercises any functions or responsibilities in the review or approval of the undertaking or carrying out of the Scope of Work covered by the contract shall voluntarily acquire any personal interest, directly or indirectly, in the contract or proposed contract.

22. **CONFLICT OF INSTRUCTIONS**

If a conflict exists between the General Terms and Conditions and instructions contained herein, and the Special Terms and Conditions and instructions contained herein, the Special Terms and Conditions shall govern.

23. **CONTRACT OBLIGATION**

Except as otherwise stated herein, the City of Port Orange City Council shall approve the contract if greater than $25,000.00 annually. The Mayor or other person authorized by the Mayor must sign the contract before it becomes binding on the City of Port Orange or the bidder. Department heads are NOT authorized to sign contracts for the City of Port Orange. Binding agreements shall remain in effect until all products and/or services covered by this purchase have been satisfactorily delivered and accepted.

24. **CONTRACT RENEWALS**

Renewals may be made ONLY by written agreement between the City of Port Orange and the bidder. Any price escalations are limited to those stated by the bidder on the original response.

25. **COPYRIGHT AND PATENT RIGHTS**

Bidder warrants that there has been no violation of copyrights or patent rights in manufacturing, producing and/or selling the item(s) ordered or shipped as a result of this response, and successful bidder agrees to hold the City harmless from any and all liability, loss or expense by any such violation.

26. **COST INCURRED BY BIDDER**

All expenses, including costs for required bonds, involved with the preparation and submission of Responses to the City, or any work performed in connection therewith shall be borne by the bidder. No payment shall be made for any response received, nor for any other effort required of or made by the bidder prior to commencement of work as defined by the contract approved by the City Council.

27. **DAMAGE**

Any damage to driveways, irrigation systems, sidewalks, pavement, or landscaping will be evaluated by the City's representative and the bidder. If the bidder is found to be at fault, all repairs, restitution, or reimbursements to the City must be completed within one week of discovery.

28. **DEBARMENT HISTORY**

The City will consider a bidder's debarment history information in its review and determination of responsibility. All bidders are required to disclose to the City all cases of debarment filed, pending, or resolved by the City or other public entity during the last five (5) years prior to the solicitation response due date, whether such actions were brought by or against the bidder, any parent or subsidiary of the bidder, or any predecessor organization. If the bidder is a joint venture, the information provided should encompass the joint venture (if it is not newly formed for purposes of responding to the solicitation) and each of the entities forming the joint venture. Although the review of a bidder's debarment history is an issue of responsibility, the failure to provide debarment history as required on the Certification Regarding Debarment, Suspension and Other Responsibility (contained herein) may result in a recommendation of non-responsive by the Purchasing Manager.

29. **DEFAULT PROVISIONS**

In the event of default by the bidder, the City reserves the right to procure the item(s) bid from other sources and hold the bidder responsible for excess costs incurred as a result. If a bidder defaults on a City contract, the City Council may elect to refrain from doing business with the bidder for a period of 36 months from the date of default.

30. **DELIVERY OF GOODS/SERVICES**

All materials are to be delivered F.O.B.; City of Port Orange designated facility. Delivery dates pertaining to this invitation must be clearly stated in the bid form where required and include weekends and holidays. Failure to comply with this requirement may be a cause for disqualification of bid. Unless otherwise specified, delivery at the earliest date is required. The bidder shall clearly state in the response the time required for delivery upon receipt of contract or purchase order. Proposed delivery time must be specific and such phrases "as required," "as soon as possible" or "prompt" may result in disqualification of the bid. Delivery time will be a factor for any orders placed as a result of this response. The City reserves the right to cancel such order(s) or any part thereof, without obligation, if delivery is not made within the time(s) specified herein and hold the Bidder in default. Upon approval of a contract, the bidder is obligated to deliver the goods to the destination specified in the solicitation or the purchase order and bears the risk of loss until delivery. If this solicitation or purchase order does not contain delivery instructions, bidder shall request instructions in writing from the Purchasing Manager. If the delivery instructions contained in the solicitation allocate delivery costs and risks in a manner contrary to this section, the provisions of this competitive solicitation shall prevail. When delivery is not met as provided for in the contract, the Purchasing Division reserves the right to make the purchase on the open market, with any cost in excess of the contract price paid by the bidder, in addition to any other damages, direct or consequential, incurred by the City as a result thereof. In addition, failure of the bidder to meet the contract delivery dates will be cause for removal of the bidder from the City's list of eligible bidders/proposers as determined by the Purchasing Division.

31. **DETERMINATION OF LOWEST AND BEST RESPONSIBLE BIDDER**

In determining the lowest and best responsible bidder, in addition to price, there will be considered the following:

a. The ability, capacity and skill of the bidder to perform the contract.
b. Whether the bidder can perform the contract within the time specified, without delay or interference.

c. The character, integrity, reputation, judgment, experience, and efficiency of the bidder.
d. The quality of performance of previous contracts.
e. The previous and existing compliance by the bidder with laws and ordinances relating to the contract.
f. The sufficiency of the financial resources and ability of the bidder to perform the contract or provide the service.
g. The quality, availability and adaptability of the supplies or contractual services to the particular use required.
h. The ability of the bidder to provide further maintenance and service for the use of the subject of the contract.
i. The number and scope of conditions attached to the bid.
j. Such other factors as appear to the city council to be pertinent to the bid or the contract under all of the circumstances involved.

32. **DISCLOSURE OF CONFLICTS**

The award is subject to the provisions of Chapter 112.313, Florida Statutes. All bidders must disclose with their response the name of any officer, director, or agent who is also an employee of the City. Further, all bidders must disclose the name of any employee who owns, directly or indirectly, an interest in the bidder's firm or any of its branches. The bidder shall not compensate, in any manner, directly or indirectly, any officer, agent, or employee of the City for any act or service that he/she may do, or perform for, or on behalf of any officer, agent or employee of the bidder. No officer, agent, or employee of the City shall have any interest, directly or indirectly, in any contract or purchase made, or authorized to be made by anyone for, or on behalf of the City. The bidder shall have no interest and shall not acquire any interest that shall conflict in any manner or degree with the performance of the services required under the solicitation.

33. **DISQUALIFICATION OF BIDDER**

The Purchasing Manager shall maintain a current listing of qualified bidders. The Purchasing Manager may, from time to time, remove any bidder's name from the list of qualified bidders. Normally the removal of a bidder from the bidder list is done after nonresponse from that bidder for three (3) consecutive solicitations. Such action may also arise out of breach of contract, default, or irregular business practice, based on the Finance Director and City Attorney's recommendation. Any or all responses may be rejected if the City believes that collusion exists among the bidders. Responses in which the prices are obviously unbalanced may be rejected. If multiple responses are submitted by a bidder and after the responses are opened one of the responses is withdrawn, the result will be that all of the responses submitted by that bidder will be withdrawn; however, nothing herein prohibits a bidder from submitting multiple responses for different products or services.

34. **EVALUATION**

Evaluation shall be used as a determinant as to which response items or services are the most efficient and/or most economical for the City. It shall be based on all factors which have a bearing on price and performance of the items in the user environment. All responses are subject to tabulation by the City of Port Orange Purchasing Division and recommendation to the governing body. Compliance with all solicitation requirements, delivery and needs of the using department are considerations in evaluating responses. Pricing is NOT the only criteria for making a recommendation. The City of Port Orange Purchasing Division reserves the right to contact any bidder/proposer, at any time, to clarify, verify or request information with regard to any response.

35. **EXCEPTIONS TO SPECIFICATIONS**

For purposes of evaluation, the bidder must indicate any exception to the specifications, terms, and/or conditions, no matter how minor. This includes any agreement or contract forms supplied by the bidder that are required to be signed by the City. If exceptions are not stated by the bidder, in his bid, it will be understood that the item(s)/services fully comply with the specifications, terms and/or conditions stated by the City. Exceptions are to be listed by the bidder on an attachment included with the bid. The City will not determine exceptions based on a review of any attached sales or manufacturer's literature.

36. **E-VERIFY**

Bidders shall utilize the U.S. Department of Homeland Security's E-Verify system to verify the employment eligibility of all new employees hired by the bidder during the term of contract and shall expressly require any subcontractor performing services pursuant to the contract to likewise utilize the U.S. Department of Homeland Security's E-Verify system to verify the employment eligibility of all new employees hired by the subcontractor during the term of contract.

37. **FACILITIES**

The City reserves the right to inspect the bidder's facilities at any time.

38. **FAILURE TO RESPOND**

If the bidder elects not to bid, please return the enclosed "No Submittal Response Form" by the bid due date and state the reason(s) for not bidding. Failure to respond, either by submitting a bid, or by submitting a "No Submittal Response Form", three (3) times, shall result in the bidder's name being removed from the City's mailing list.

39. **FINANCIAL STABILITY**

Bidders shall be prepared to supply a financial statement upon request, preferably a certified audit of the last available fiscal year. A third party prepared financial statement and the latest Dunn & Bradstreet report will be accepted in lieu thereof.

40. **FORCE MAJEURE**

Neither party shall be liable for any delay in performance or failure to perform any obligation hereunder if, and to the extent that, such failure or delay is caused by an event of force majeure. Force majeure shall mean any act, event or condition that is beyond the party's reasonable control, that materially and adversely affects the party's ability to perform its obligations hereunder, and that is not the result of the party's willful neglect, error, omission or failure to exercise reasonable due diligence.

41. **FOREIGN COUNTRIES OF CONCERN**

A governmental entity may not knowingly enter into a contract with an entity which would give access to an individual's personal identifying information if: a) the entity is owned by the government of a foreign country of concern to include the People's Republic of China, the Russian Federation, the Islamic Republic of Iran, the Democratic People's Republic of Korea, the Republic of Cuba, the Venezuelan regime of Nicolas Maduro, or the Syrian Arab Republic, including any agency of or any other entity of significant control of such foreign country of concern; b) the government of a foreign country of concern has a controlling interest in the entity; or c) the entity is organized under the laws of or has its principal place of business in a foreign country of concern.

42. **GOVERNING FORMS**

In the event of any conflict between the terms and provisions of these requirements and the specifications, the specifications shall govern. In the event of any conflict of interpretation of any part of this overall document, the City's interpretation shall govern.

43. **GOVERNING LAW**

Bidders shall comply with all applicable federal, state and local laws and regulations. All responses are solicited and shall be made pursuant to the Code of Ordinances, City of Port Orange, Chapter 2, Article VI, Division 2, Section 2-263, and all responses will be evaluated in accordance with the provisions thereof. Code of Ordinances, City of Port Orange is on file in the Office of the City Clerk, City Hall, 1000 City Center Circle, Port Orange, Florida and at www.municode.com. The City of Port Orange is also governed by the Consultants' Competitive Negotiation Act, Section 287.055, Florida Statutes, as the method of selecting architects, engineers and land surveyors. The City has utilized the procedures in the Act for Professional counselors, environmentalists, planners, general contractors, computer systems, designers, telecommunications consultants, maintenance technicians, financial services and other professional services. Every acquisition equal to or greater than $35,000.00 must have a signed, notarized "Public Entity Crimes Form" to comply with Section 287.133(3)(a), Florida Statutes. Also required is the "Drug- Free Preference Form" to comply with Section 287.087, Florida Statutes. Each form is included in the Solicitation.

44. **GRANT FUNDING**

Any contract entered into by the City that is to be paid from grant funds shall be limited to payment from the grant funding and the bidder understands that the City has not set aside any City funds for the payment of obligations under a grant contract. If grant funding should become unavailable at any time for the continuation of services paid for by the grant, and further funding cannot be obtained for the contract, then the sole recourse of the provider shall be to terminate any further services under the contract and the contract shall be null and void.

45. **HIPAA COMPLIANCE**

The bidder agrees to comply with the Standards for Privacy of Individually Identifiable Health Information of the Health Insurance Portability and Accountability Act of 1996, PL 104-191, 45 CFR Parts 160-164, as amended, referred to as "HIPAA," to the extent that the bidder uses, discloses or has access to protected health information as defined by HIPAA.

46. **IDENTICAL TIE BIDS**

If there are tie bids, meaning everything except the information relating to the submitting firm is the same, the following methods shall be used in the order below to break the tie:

- If one has or had a contract with the City and performance is or was satisfactory. If performance of a tie bidder who has or had a contract with the City and performance is or was not satisfactory, the other tie-bidder is awarded.
- Drug free workplace policy in place.

47. **INDEMNIFICATION/HOLD HARMLESS**

(a) Bidder shall be liable for any loss of, or damage to, City property caused by the negligence, recklessness, or intended wrongful misconduct of bidder, his/its agents, servants and employees and shall indemnify and save the City harmless against all actions, proceedings, claims, demands, costs, damages and expenses, including attorney's fees, by reason of any suit or action brought for any actual or alleged injury to or death of any person or damage to property other than City property, resulting from the performance of the contract by the bidder, his/its agents, servants and employees. Bidder shall submit a full written report to the Finance Director within twenty-four (24) hours following the occurrence of such damage, loss or injury.

(b) To the fullest extent permitted by law, in addition to the express duty to indemnify City when there is any causal connection between bidder's work and any injury, loss, damage, death or property damage, bidder expressly undertakes a duty to defend City as a separate duty, independent of and broader than the duty to indemnify. The duty to defend agreed to by bidder hereby expressly include all costs of litigation, attorney's fees, settlement costs and reasonable expenses in connection with the litigation, whether or not the claims made for loss, injury, damage or property damage are valid or groundless and regardless of whether the defense of City is maintained by the City or assumed by bidder as long as the claims made could be causally connected to bidder as reasonable determined by the City.

48. **INDEPENDENT CONTRACTOR**

It is expressly understood and agreed by both parties hereto that the City is contracting with the successful bidder as an independent contractor. The parties hereto understand and agree that the City shall not be liable for any claims which may be asserted by any third party occurring in connection with the services to be performed by the successful bidder under this contract and that the successful bidder has no authority to bind the City. The bidder represents itself to be an independent contractor offering such services to the public and shall not represent himself or his employees to be an employee of the City. Therefore, the bidder shall assume all legal and financial responsibility for taxes, FICA, employee fringe benefits, worker's compensation, employee insurance, minimum wage requirements, overtime, etc., and agrees to indemnify, save, and hold the City, its officers, agents, and employees, harmless from and against, any and all loss; cost (including attorney's fees); and damage of any kind related to such matters. The bidder shall further understand that the City cannot save and hold harmless and or indemnify the bidder and/or the bidder's employees against any liability incurred or arising as a result of any activity of the bidder or any activity of the bidder's employees performed in connection with the contract.

49. **INSPECTIONS AND TESTING**

City of Port Orange reserves the right to inspect any item(s) or service location for compliance with specifications and requirements and needs of the using department. If a bidder cannot furnish a sample of a response item, where applicable, for review, or fails to satisfactorily show an ability to perform, the City can reject the response as inadequate and non-responsive.

50. **INSURANCE CANCELLATION**

No change or cancellation in insurance shall be made without thirty (30) days of written notice by the bidder to the City. Insurance coverage required in these specifications shall be in force throughout the contract term. Should any awardee fail to maintain or to provide acceptable evidence of current insurance within five (5) days after receipt of written notice at any time during the contract term, the City shall have the right to consider the contract breached which shall justify the termination thereof.

51. **INSURANCE REQUIREMENTS**

Bidder shall maintain insurance, as required herein, during the life of this contract. Bidder shall provide to the City, a certificate of insurance endorsing the City of Port Orange as an additional named insured. All insurance coverages of the bidder shall be primary and non- contributory. All insurance coverages of the bidder shall not seek contribution from any other insurance or self- insurance available to the City. For workers' compensation coverage, the bidder's insurance certificate shall include the insurer's waiver of subrogation in lieu of endorsing the City as an additional insured for workers' compensation.

IMPORTANT: The City does not accept Workers' Compensation Exemptions. Bidder may use leased employees if the bidder ensures that all workers who access the jobsite are employees covered by the employee leasing company, and no non-employees are permitted to access the jobsite. Any bidder using a leased employee shall complete the City's Leased Employee Affidavit Form Exhibit. Policies for Workers' Compensation may be issued by companies authorized as a group self-insurer by F.S. 440.572. Policies other than Workers' Compensation shall be issued by insurers licensed and/or duly authorized under Florida Law to do business in the State of Florida and all insuring companies are required to have a minimum rating of "A-" in the "Best Key Rating Guide" published by A.M. Best & Company, Inc. Bidder shall not commence work under this contract until the City has received a certificate or certificates of insurance with endorsement evidencing the required insurance. Insurer shall provide the City written notice of cancellation, non-renewal or any other changes in coverage no later than thirty (30) days prior to the effective date of the change and shall provide notice to the City no later than 10 days after non-payment. The Certificates of Insurance and required insurance policies shall contain provisions that thirty (30) days of prior written notice shall be given to the City of any cancellation, intent not to renew, or reduction in the policies or coverages. Bidder shall require and ensure each of its subcontractors to maintain, until the completion of the subcontractor's work, insurance of the types and to the limits set forth herein. All insurance coverages shall be primary and non-contributory. All insurance coverages of the subcontractors shall not seek contribution from any other insurance or self-insurance available to the City. The bidder is responsible for ensuring that its subcontractors maintain the required coverage. Failure of the bidder to ensure the subcontractors maintain the required coverage, shall not relieve the bidder of any contractual responsibility, obligation or liability. The City reserves the right to increase the insurance coverage requirement as determined for higher risk contracts. The acceptance by the City of any Certificate of Insurance does not constitute approval or agreement by the City that the insurance requirements have been satisfied or that the insurance policy shown on the Certificate of Insurance is in compliance with and does not waive the insurance required by this. Should at any time the bidder or subcontractors not maintain the insurance coverages required herein, the City may terminate the contract or at its sole discretion shall be authorized to purchase such coverages and charge the bidder for such coverages purchased. The City shall be under no obligation to purchase such insurance, nor shall it be responsible for the coverages purchased or the insurance company or companies used. The decision of the City to purchase such insurance coverages shall in no way be construed to be a waiver of any of its rights under the contract.

Standard Insurance Requirements			
Required	**Insurance**	**Standards**	**Additional Requirements**
☒	Workers' Compensation The Contractor shall maintain coverage for its employees with statutory workers' compensation limits, and no less than the limits indicated in the Schedule of Limits for Employers' Liability. Said coverage shall include a waiver of subrogation in favor of the City. **The City will not accept elective exemptions.** Any Contractor using an employee leasing Company shall complete the Leased Employee Affidavit Exhibit Form.	Contract Amount — Limits Up to $10 million — Statutory/$500,000 $10 - $20 million — Statutory/$1,000,000 Contracts over $20 million to be determined by the City	• If contract requires work on or about navigable waters, Longshoreman's and Harbor Workers' coverage required. • If vessels involved, Jones Act coverage with limits of $500,000 required
☒	Comprehensive General Liability (including completed operations and contractual liability)	Limits: Combined Single Limit Bodily Injury and Property damage: $1,000,000 each occurrence $1,000,000 aggregate	When work is on or under Railroad rights of way or properties, the Contractor shall take out and maintain during the life of the contract, Railroad protective liability and property damage insurance in amounts as requested by the Railroad.
☒	Comprehensive Business, Automobile Liability to include all owned, hired and non-owned automobiles	Limits: Auto Liability Bodily Injury and Property Damage: $1,000,000 each occurrence $1,000,000 aggregate	
Additional Insurance Requirements			
☐	Property Insurance Builders Risk Additional Coverage:	Limits: Buildings – completed value of contract "All Risk" coverage on latest ISO for or its equivalent. Permission grated to occupy. Owner named as insured AIMA	If agreement required handling or installation of Owner's equipment, coverage should be furnished on "All Risk" form, including transit and Owner shall be named.
☐	Installation Floater (IT)	Limits: Coverage – To Be Determined	
☐	Contractor Pollution Liability	Limits: Coverage - $1,000,000	
☐	Professional Liability/Errors and Omissions	Limits: Coverage - $1,000,000	
☐	Umbrella Policy	Limits: Coverage – To Be Determined	
☒	Payment and Performance Bond required	Limits: Coverage – equal to amount of contract	
	City Manager waives Payment and Performance Bond for work under $200,000 unless otherwise requested by the Department Head.		
	Unless otherwise required by law, City Manager waives insurance for FOB goods only purchases.		

52. **INVOICES AND PAYMENTS**

Pay Applications shall be in accordance with Article 15 of the contract. If the awarded firm would like to receive payment via ACH, this can be accommodated after the contract is fully executed.

53. **IRREVOCABILITY OF RESPONSES**

Each bidder agrees that responses shall remain open until the contract effective date not to exceed 90 days after the award selection, shall not be subject to revocation or withdrawal, and shall be subject to the City Council's acceptance of a contract with the bidder.

54. **LATE SUBMISSIONS, LATE MODIFICATIONS AND LATE WITHDRAWALS**

Responses received after the response due date and time are late and shall not be considered. Modifications received after the response due date are also late and shall not be considered. Letters of withdrawal received after the response due date are late and shall not be considered. Letters of withdraw received after contract award shall be deemed a breach of contract, subject to penalties as set forth in the contract and solicitation.

55. **LEGAL REQUIREMENTS**

Applicable provision of all federal, state, county and local laws, and all ordinances, rules, and regulations shall govern development, submittal and evaluation of all responses received in response hereto and shall govern any and all claims and disputes which may arise between person(s) submitting a response to a solicitation hereto and the City by and through its officers, employees and authorized representatives, or any other person, natural or otherwise; and lack of knowledge by any bidder shall not constitute a cognizable defense against the legal effect thereof.

56. **LICENSES, PERMITS AND TAXES**

The bidder shall comply with all rules, regulations, laws and permitting requirements of the City, Volusia County, the State of Florida, and the United States Government now in force or hereafter to be adopted. The bidder shall abide by all ordinances and laws pertaining to his/her operations and shall secure, at his/her expense, all licenses and permits necessary for construction and operation.

57. **LITERATURE (if applicable):**

If no brand, model or make is specified, bidders shall submit descriptive literature and technical data, fully detailing all features, designs, construction, appointments, finishes and the like not covered in the specifications, necessary to fully describe the equipment, material, and/or services bidder proposes to furnish.

58. **MAINTENANCE**

If maintenance is required for equipment purchased as a result of this solicitation, it is preferred that such maintenance be available to the City of Port Orange by a manufacturer-authorized maintenance facility. Costs for this service shall be shown on the Schedule of Unit Pricing form for this solicitation. If the City of Port Orange opts to include maintenance, it shall be so stated in the purchase order and said cost will be included. Service will commence only upon expiration of applicable warranties and shall be priced accordingly.

59. **NAME BRANDS**

Specifications may reference name brands and model numbers. It is not the intent of the City of Port Orange to restrict these bids in such cases, but to establish a desired quality level of merchandise or to meet a pre-established standard due to like existing items. Bidders may offer items of equal stature and the burden of proof of such stature rests with the bidder, unless otherwise specified by the City. The City of Port Orange shall act as sole judge in determining equality and acceptability of products offered.

60. **NON-DISCRIMINATION**

There shall be no discrimination as to race, color, religion, gender, age, marital status, national origin, ancestry, and physical or mental disability in the operations conducted under this contract. Included as applicable activities by the contractor under this section are the solicitation for or purchase of goods or services, or the subcontracting of work in performance of this contract.

61. **NON-EXCLUSIVITY OF CONTRACT**

The selected bidder understands and agrees that any resulting contractual relationship is non-exclusive, and the City of Port Orange reserves the right to seek similar or identical services elsewhere if deemed in the best interest of the City of Port Orange.

62. **NON-PERFORMANCE**

Failure to meet the expected quality of workmanship, schedule, or other criteria agreed upon, shall be considered a default. In case of default, the City may procure the required services from other sources and hold the contractor responsible for any excess costs occasioned thereby and may immediately cancel the contract.

63. **NOTICE TO CONTRACTOR**

The employment of unauthorized aliens by any contractor is considered a violation of Section 274A (e) of the Immigration and Nationality Act. If the contractor knowingly employs unauthorized aliens, such violation shall be cause for unilateral cancellation of the contract.

64. **PATENTS/COPYRIGHTS**

The successful bidder agrees to indemnify and hold the City harmless from any claim involving patent infringement or copyrights on goods supplied.

65. **PRE-BID CONFERENCE**

The Purchasing Manager shall determine if a pre-bid conference is required and provide the date, time and location in the solicitation legal advertisement and solicitation specifications. The conference shall normally be held in the Council Chambers, located on the first floor of City Hall, 1000 City Center Circle, Port Orange, Florida. A site visit may be included and shall immediately follow. Only bidders attending a mandatory pre-bid conference will be eligible to submit a response. The representative of each bidder shall be an authorized employee of the bidder and shall sign in accordingly.

66. **PREPARATION OF RESPONSES**

In preparing responses, the Schedule of Unit Pricing form, the Bid Bond form (when a Bid Bond is required as bid security), Certificate as to Corporate Principal, Public Entity Crimes Statement, Anti- Collusion Statement, and Drug Free Preference Statement must be properly executed in ink. The prescribed Schedule of Unit Prices shall be typewritten or written in ink, or electronically imputed in the blank spaces for each item, with the amounts extended if a unit price bid, and all amounts totaled. The sum of the total bid as calculated from the individual items, Schedule of Unit Prices, shall equal the Total Price. Except as provided below, bids containing substitutions or combinations of alternates will not be considered unless such substitutions or combinations are specifically authorized by the solicitation. The bidder shall sign his/her name and give his/her business address in the spaces provided therefore. If the submittal is made as a partnership, it shall be signed by all partners; if made by a corporation, it shall be signed in the name of the corporation by one of the officers thereof and shall have affixed the seal of the corporation.

67. **POSTPONEMENT/CANCELLATION/WAIVER OF IRREGULARITIES**

The City may, at its sole and absolute discretion, reject any and all, or parts of responses; re- advertise the solicitation for new responses; postpone or cancel, at any time, the solicitation process; or waive any irregularities in the solicitation or in the responses received as a result of the solicitation, or to accept that response which best serves the interest of the City.

68. **PRICING**

Responses may not be withdrawn before the expiration of one-hundred-twenty (120) days. Prices shall be firm, with no escalator clauses unless specified by the City. Responses may be withdrawn after one-hundred-twenty (120) days only upon written notification to the City. Prices for all goods and/or services shall be firm for the duration of this contract and shall be stated on the Schedule of Unit Pricing form. Prices shall be all inclusive: no price changes, additions, or subsequent qualifications will be honored during the course of the contract. All prices must be written in ink or typewritten. Pricing on all transportation, freight, drayage and other charges are to be prepaid by the contractor and included in the bid prices. If there are any additional charges of any kind, other than those mentioned above, specified or unspecified, the bidder shall indicate the items required and attendant costs or forfeit the right to payment for such items. Where unit pricing and extended pricing differ, unit pricing prevails. In the event of any discrepancy between the written amounts and the numerals, the written amounts shall govern and will be considered as the price bid. When submitting bids/proposals based on a lump sum basis, bidders shall be required to submit a price for each line item listed on the Schedule of Unit Pricing in order to be considered for award.

69. **PRODUCTS/ESTIMATES**

Items included on the bid form represent the needs of various departments within the City. This is in no way to be construed as the entire or complete list of products to be purchased from the resulting contract. There is no anticipated dollar volume for this contract and estimated quantities provided on the Schedule of Unit Pricing are for bidding purposes only and are not guaranteed. Items shall be ordered on an as needed, when needed basis. Exact quantities or estimated quantities cannot be predetermined.

70. **PROPRIETARY INFORMATION**

Upon receipt by the City, responses to solicitations, become public records subject to the provisions Florida's state policy on public records, Section 119, Florida Statutes. If you believe that any portion of your response is exempt, you should clearly identify the specific documents for which confidentiality is claimed and provide

specific legal authority of the asserted exemption. Any financial statement that an agency requires a prospective bidder to submit in order to prequalify for bidding or for responding to a proposal for a road or any other public works project is exempt from Section 119.07, Florida Statutes, and Article I, 24(a), Florida Constitution.

71. **PROTECTION**

Precaution shall be exercised at all times for the protection of persons, (including employees) and property. All existing structures, utilities, services, roads, trees, shrubbery, etc. shall be protected against damage or interrupted service at all times by the contractor during the term of contract, and the contractor shall be held responsible for any damage to the property occurring by reason of his/her operation on the property.

72. **PUBLIC ENTITY CRIMES**

In accordance Section 287.133 (2)(a), Florida Statutes: A person or affiliate who has been placed on the convicted bidder list following a conviction for a public entity crime may not submit a bid on a contract to provide any goods or services to a public entity, may not submit a bid on a contract with a public entity for the construction or repair of a public building or public work, may not submit bids on leases of real property to a public entity, may not be awarded or perform work as a contractor, supplier, subcontractor or consultant under a contract with any public entity, and may not transact business with any public entity in excess of the threshold amount provided Section 287.017, Florida Statutes, for CATEGORY TWO for a period of 36 Months from the date of being placed on the convicted Bidder list.

73. **PUBLIC RECORDS COMPLIANCE**

Contractor shall comply with public records laws as set forth in Section 119, Florida Statutes, and shall specifically:

a. Keep and maintain public records that ordinarily and necessarily would be required by the City in order to perform the service.
b. Provide the public with access to public records on the same terms and conditions that the City would provide the records and at a cost that does not exceed the cost provided in Section 119, Florida Statutes, or as otherwise provided by law.
c. Ensure that public records that are exempt or confidential and exempt from public records disclosure requirements are not disclosed except as authorized by law.
d. Meet all requirements for retaining public records and transfer to the City, at no cost, all public records in possession of the contractor upon termination of the contract and destroy any duplicate public records that are exempt or confidential and exempt from public records disclosure requirements. All records stored electronically must be provided to the City in a format that is compatible with the information technology systems of the City.

IF THE VENDOR HAS QUESTIONS REGARDING THE APPLICATION OF CHAPTER 119, FLORIDA STATUTES, TO THE VENDOR'S DUTY TO PROVIDE PUBLIC RECORDS RELATING TO THIS CONTRACT, CONTACT THE CUSTODIAN OF PUBLIC RECORDS AT 386-506-5563, cityclerk@port-orange.org , CITY OF PORT ORANGE, 1000 CITY CENTER CIRCLE, PORT ORANGE, FLORIDA, 32129.

The failure of contractor to comply with a public records request shall constitute a material breach of the contract.

74. **PUBLIC RECORDS/PUBLIC MEETINGS EXEMPTION STATEMENT**

Section 119.071(1)(c), Florida Statutes: **Any financial statement that an agency requires a prospective bidder to submit in order to prequalify for bidding or for responding to a proposal for a road or any other public works project is exempt from s. 119.07(1) and s. 24(a), Art. I of the State Constitution. On June 2, 2011, Governor Scott signed HB 7223 into law.** This new legislation amends Florida's Public Records and Sunshine Laws, by expanding "exemptions" applicable to bids, proposals and replies to sealed competitive solicitations, and closes evaluation meetings from the public in certain instances. First, Section 119.071, Florida Statutes was amended to provide that sealed bids, proposals, or replies received by a Florida public agency shall remain exempt from disclosure until an intended decision is announced or until 30 days from the opening, whichever is earlier. This means that bidders will not be able to procure a copy of their competitors' bids until an intended decision is reached or 30 days has elapsed since the time of the bid opening. The prior version of the law provided for a 10-day exemption. Next, Section 286.0113, Florida Statutes was amended to provide that meetings of persons appointed to evaluate bids or proposals and negotiate contracts shall be closed in certain circumstances. Specifically, portions of such meetings may now be closed to the public during oral presentations made by a bidder, or where a bidder answers questions. In other words, neither bidders, nor the public will be

permitted to sit in on meetings, unless this exemption is waived by the City Council, wherein their competitors are making presentations or discussing their bid or proposal with the committee members. The portions of these meetings must still be recorded and are subject to disclosure at the time of an intended award decision or within 30 days of the bid or proposal opening, whichever is earlier. Portions of the meetings that do not involve presentations, questions and answers, or negotiation strategy or negotiation sessions are still open to the public and competing bidders, but the new law limits public attendance to portions of such meetings.

75. **PURCHASE ORDER AND DELIVERY**

The successful bidder shall not deliver products or provide services without a City of Port Orange purchase order, signed by an authorized agent of the City of Port Orange. The fastest, most reasonable delivery time shall be indicated by the bidder. Any special information concerning delivery should also be included, on a separate sheet, if necessary. All items shall be shipped F.O.B. INSIDE DELIVERY unless otherwise stated in the specifications. This shall be understood to include bringing merchandise to the appropriate room or place designated by the using department. Every tender or delivery of goods must fully comply with all provisions of these requirements and the specifications including time, delivery and quality. Nonconformance shall constitute a breach which shall be rectified prior to expiration of the time for performance. Failure to rectify within the performance period shall be considered cause to reject future deliveries and cancellation of the contract by City of Port Orange without prejudice to other remedies provided by law. Where delivery times are critical, the City of Port Orange reserves the right to award accordingly.

76. **QUALITY**

All materials used for the manufacture or construction of any supplies, materials or equipment covered by this bid shall be new. The items bid must be new, the latest model, of the best quality and highest-grade workmanship unless otherwise specified in this bid by the City.

77. **QUESTIONS/INTERPRETATIONS**

Questions regarding interpretation of responses, solicitation results or solicitation awards shall be directed in writing to the Purchasing Division and referenced by the solicitation number no later than the last day for questions as specified in the solicitation documents. The City of Port Orange shall not be responsible for oral interpretations given by any City personnel or representative or others. The issuance of a written addendum is the only official method whereby interpretation, clarification or additional information can be given.

78. **RECORDS/AUDIT**

(a) The contractor agrees that the City, or any duly authorized representative, shall, until the expiration of five (5) years after final payment hereunder, have access to and the right to examine and copy any pertinent books, documents, papers and records of the contractor involving transactions related to this contract.

(b) The contractor further agrees to include in any subcontract for more than $10,000 entered into as a result of this contract, a provision to the effect that the subcontractor agrees that the City or any duly authorized representative shall, until the expiration of five (5) years after final payment under the subcontract, have access to and the right to examine and copy any pertinent books, documents, papers and records of such contractor involved in transactions related to such subcontract, or this contract. The term subcontract as used herein shall exclude purchase orders for public utility services at rates established for uniform applicability to the general public.

(c) The period of access provided in subparagraphs (a) and (b) above for records, books, documents and papers which may relate to any arbitration, litigation, or the settlement of claims arising out of the performance of this contract or any subcontract shall continue until any appeals, arbitration, litigation or claims shall have been finally disposed of.

79. **RECYCLED MATERIALS**

City of Port Orange encourages the use of products made of recycled materials.

80. **REJECTING OF RESPONSES/RE-BIDDING**

The City reserves the right to accept or reject any or all responses or parts of responses, to waive irregularities and technicalities, and to request re-bids. The City also reserves the right to award the contract on such items the City deems will best serve the interests of the City. The City further reserves the right to award the contract on a "split order" basis, or such combination as shall best serve the interests of the City unless otherwise specified. The City Council shall have the authority to reject any and all responses. If the lowest and best response exceeds the budgeted amount and the City Council does not make additional funds available, the Purchasing Division with the help of the department head shall have the authority to re-advertise the article or articles for bidding after making sufficient changes in the plans or specifications to bring the cost within the limit of the money available. (Code 1981, § 8-28.)

81. **REQUEST FOR ADDITIONAL INFORMATION**

Prior to the final solicitation selection, bidders may be required to submit additional information which the City may deem necessary to further evaluate the bidder's qualifications to perform under the terms of the solicitation and subsequent contract.

82. **REVIEW OF RESPONSES/SUBMISSIONS**

Each response will be reviewed to determine if the response is responsive to the submission requirements outlined in the solicitation. A responsive response is one which follows the requirements of the solicitation, includes all required documentation, is submitted in the format outlined in the solicitation, is of timely submission, and has the appropriate signatures as required on each document. Failure to comply with these requirements may deem your response non-responsive.

83. **RIGHT OF WITHDRAWAL**

A bid, proposal, statement, or reply may not be withdrawn before the expiration of one-hundred-twenty (120) days from the response due date.

84. **RIGHTS TO SOLICITATION SUBMITTED MATERIAL**

All responses, inquiries, or correspondence relating to or in reference to a solicitation, and all reports, charts, and other documentation submitted by bidders shall become the property of the City when received.

85. **RULES, REGULATIONS AND LICENSING REQUIREMENT**

The bidder shall comply with all laws, ordinances and regulations applicable to the services contemplated herein, including those applicable to conflict of interest and collusion. Bidders are presumed to be familiar with all federal, state and local laws, ordinances, codes and regulations that may in any way affect the services offered.

86. **SAMPLES**

Samples, when requested, must be furnished at, or before the bid opening, (unless otherwise specified), and will be delivered at no charge to the City. If not used and/or destroyed in testing, said sample(s) will, at the bidder's request, be returned within thirty (30) days after bid award at the bidder's expense. If requested by the City, samples and/or inspection of like items are to be made available in the central Florida area.

87. **SCRUTINIZED COMPANIES LIST**

The Contractor shall refrain from any of the prohibited business activities with the Governments of Sudan and Iran as described in section 215.473, Florida Statutes. Pursuant to section 287.135(5), Florida Statutes, the City may immediately terminate this Contract for cause if the Contractor is found to have submitted a false certification or if the Contractor is placed on the Scrutinized Companies with Activities in Sudan List or the Scrutinized Companies with Activities in the Iran Petroleum Energy Sector List or is engaged in business operations with Cuba or Syria during the term of the contract. The Contractor shall provide a completed Form 7.10 Scrutinized Company Certification, certifying the Contractor's compliance with this section, prior to the execution of this Agreement.

88. **SEPARATION AND DISTRUBUTION**

The solicitation has been designed for transmittal as a complete document to interested parties. It is recommended that it not be separated; however, it may be reproduced in its entirety as additional distribution might dictate.

89. **SEVERABILITY**

If any section, subsection, paragraph, sentence, clause, phrase or word of these requirements or the specifications shall be held invalid, such holding shall not affect the remaining portions of these requirements and the specifications and it is hereby declared that such remaining portions would have been included in these requirements and the specifications as though the invalid portion had been omitted.

90. **SIGNATURE REQUIRED**

All responses must show the company name and be signed by a company officer or employee who has the authority to bind the company or firm by their signature. UNSIGNED RESPONSES WILL BE REJECTED. All manual signatures must be original - no rubber stamp, photocopy, etc.

91. **SIGNED RESPONSE CONSIDERED AN OFFER**

The signed response is considered an offer on the part of the bidder, which offer shall be considered accepted upon approval by the City of Port Orange City Council (if required). The City of Port Orange will issue a purchase order or a letter of authorization to the successful bidder, as authorization for delivery of the items awarded subject to requirements of detailed specifications and those contained herein. In the event of default on the part of the bidder after such acceptance, the City may take such action as it deems appropriate including legal action for damages or specific performance.

92. **SILENCE OF SPECIFICATIONS**

The apparent silence of specifications as to any detail, or the apparent omission from it of a detailed description concerning any point, shall be regarded as meaning that only the best commercial practice is to prevail and that only material and workmanship of the finest quality are to be used. All interpretations of specifications shall be made on the basis of this statement. The items furnished under this contract shall be new, unused of the latest product in production to commercial trade and shall be of the highest quality as to materials used and workmanship. Manufacturer furnishing these items shall be experienced in design and construction of such items and shall be an established supplier of the item bid.

93. **SOCIAL, POLITICAL, OR IDEOLOGICAL INTERESTS**

Pursuant to Florida Statute 287.05701, the governing body of a county, municipality, special district, or any other political subdivision of the state may not request documentation of or consider a vendor's social, political, or ideological interests when determining if the vendor is responsible. Furthermore, an awarding body may not give preference to a vendor based on the vendor's social, political, or ideological interests.

94. **SOLICITATION FORM COMPLETION, SUBMISSION AND RECEIPT OF RESPONSES**

Unless otherwise specified, bidders shall use the solicitation forms supplied by the Purchasing Division. Responses shall be typewritten or handwritten in ink and shall bear the original signature of the bidder's authorized representative. Responses containing erasures or corrections must be initialed by the bidder in ink. Responses shall be submitted by mail or hand delivery only. No response will be accepted by facsimile transmission, e-mail or other electronic delivery. Responses submitted by mail shall be addressed to: City Clerk, City of Port Orange, Attn: Purchasing Division, Port Orange City Hall, 1000 City Center Circle, Port Orange, Florida 32129. Responses submitted by hand delivery shall be delivered to: City Clerk, Port Orange City Hall, 1000 City Center Circle, Port Orange, Florida 32129. Responses will be accepted until 2:30 PM EST on the date indicated in the solicitation documents or as addenda issued by the City. One (1) sealed envelope or package shall be submitted. The sealed envelope/package must contain the required forms and price proposals, where applicable, and will be evaluated and deemed responsive or non-responsive. All late responses will be returned to the bidder and will not be opened. Bids (Envelope/Package) shall contain one (1) original and one (1) digital (CD or flash drive) version unless otherwise indicated in the legal advertisement and shall be mailed or delivered as set forth in the preceding paragraph in one (1) SEALED ENVELOPE/PACKAGE. The envelope/ package shall be clearly marked on the outside to include the bid project name, bid number, name and address of the bidder.

95. **STATE LICENSING REQUIREMENTS**

All entities defined under Chapters 607, 608, 617 or 620, Florida Statutes, seeking to do business with the City shall be on file and in good standing with the State of Florida's Department of State. Prior to making an offer, the bidder shall have met the license, certification, and any other requirements of the state, county, city and/or other agency of authority with jurisdiction in such matters and should provide copies of documentation that evidence such qualifications with the response to the solicitation; and, that the bidder shall provide follow-up evidence that the bidder maintains such credentials throughout the period of the agreement. A copy of a current certificate of authority from the Secretary of State authorizing the bidder/responder to do business in the State of Florida, or other evidence of legal authority to do business in the state, county, city and/or any other agency of authority should be provided with your response to the solicitation. Information concerning certification with the Secretary of State may be obtained at https://dos.myflorida.com/sunbiz/manage-business/certification/. Contract documents shall be executed by the entity's duly authorized officer as evidenced by entity records.

96. **SUBCONTRACTING**

The awarded contractor will not sub-contract or enter into any subcontracting agreements pertaining to this contract, without obtaining written approval from the City of Port Orange.

97. **SUPPLEMENTAL MATERIALS**

Bidders are responsible for including all pertinent product data in the returned bid package. Literature, brochures, data sheets, specification information, completed forms requested as part of the bid package and any other facts which may affect the evaluation and subsequent contract award should be included. Materials such as legal documents and contractual agreements that the bidder wishes to include as a condition of the bid must also be in the returned bid package. Failure to include all necessary and proper supplemental materials may be cause to reject the entire bid.

98. **TAXES**

The City of Port Orange is exempt from all federal excise, state and local taxes unless otherwise stated in this document. A Tax Exemption Certificate will be furnished upon written request to the City of Port Orange Purchasing Division.

99. **TERM CONTRACTS**

Acceptance by the City of Port Orange of bidder's offer shall be limited to the terms herein unless expressly agreed in writing by the City. If the contract is intended to cover a specific time-period, the term will be given in the bid specifications.

100. **TERMINATION**

Owner Termination for Cause:

A. The occurrence of any one or more of the following events will constitute a default by Contractor and justify termination for cause:

1. Contractor's persistent failure to perform the Work in accordance with the Contract Documents (including, but not limited to, failure to supply sufficient skilled workers or suitable materials or equipment, or failure to adhere to the Progress Schedule);
2. Failure of Contractor to perform or otherwise to comply with a material term of the Contract Documents;
3. Contractor's disregard of Laws or Regulations of any public body having jurisdiction;
4. Contractor's repeated disregard of the authority of Owner or Engineer:
5. Contractor's failure to timely pay Subcontractors and Suppliers after it receives payment from Owner, or
6. Contractor's failure to obtain or maintain the insurance required of it in the Contract.

B. If one or more of the events identified in Paragraph A, hereinabove, occurs, then after giving Contractor (and any surety) 5 days' written notice that Owner is considering a declaration that Contractor is in default and termination of the Contract, Owner may proceed to:

1. declare Contractor to be in default, and give Contractor (and any surety) written notice that the Contract is terminated; and
2. enforce the rights available to Owner under any applicable performance bond.

C. Subject to the terms and operation of any applicable performance bond, if Owner has terminated the Contract for cause, Owner may exclude Contractor from the Site, take possession of the Work, incorporate in the Work all materials and equipment stored at the Site or for which Owner has paid Contractor but which are stored elsewhere, and complete the Work as Owner may deem expedient.

D. Owner may not proceed with termination of the Contract under Paragraph B, hereinabove, if Contractor within 5 days of receipt of notice of intent to terminate begins to correct its failure to perform and proceeds diligently to cure such failure.

E. If Owner proceeds as provided in Paragraph B, hereinabove, Contractor shall not be entitled to receive any further payment until the Work is completed. If the unpaid balance of the Contract Price exceeds the cost to complete the Work, including all related claims, costs, losses, and damages (including but not limited to all fees and charges of engineers, architects, attorneys, and other professionals) sustained by Owner, such excess will be paid to Contractor. If the cost to complete the Work including such related claims, costs, losses, and damages exceeds such unpaid balance, Contractor shall pay the difference to Owner. When exercising any rights or remedies under this paragraph, Owner shall not be required to obtain the lowest price for the Work performed.

F. Where Contractor's services have been so terminated by Owner, the termination will not affect any rights or remedies of Owner against Contractor then existing or which may thereafter accrue, or any rights or remedies of Owner against Contractor or any surety under any payment bond or performance bond. Any retention or payment of money due Contractor by Owner will not release Contractor from liability.

G. If and to the extent that Contractor has provided a performance bond under the provisions, the provisions of that bond will govern over any inconsistent provisions of Paragraphs B and D, hereinabove.

Owner Termination for Convenience:

A. Upon 5 days' written notice to Contractor and Engineer, Owner may, without cause and without prejudice to any other right or remedy of Owner, terminate the Contract. In such case, Contractor shall be paid for (without duplication of any items):

1. completed and acceptable Work executed in accordance with the Contract Documents prior to the effective date of termination, including fair and reasonable sums for overhead and profit on such Work;
2. expenses sustained prior to the effective date of termination in performing services and furnishing labor, materials, or equipment as required by the Contract Documents in connection with uncompleted Work, plus fair and reasonable sums for overhead and profit on such expenses; and
3. other reasonable expenses directly attributable to termination, such as demobilization expenses, and including costs incurred to prepare a termination for convenience cost proposal. Attorneys' fees, accountant fees, home office overhead and similar expenses shall not be deemed reasonable expenses.

B. Contractor shall not be paid for any loss of anticipated profits or revenue, post-termination overhead costs, or other economic loss arising out of or resulting from such termination.

Contractor May Stop Work or Terminate:

A. If, through no act or fault of Contractor, (1) the Work is suspended for more than 90 consecutive days by Owner or under an order of court or other public authority, or (2) Engineer fails to act on any Application for Payment within 30 days after it is submitted, or (3) Owner fails for 30 days to pay Contractor any sum finally determined to be due, then Contractor may, upon 7 days' written notice to Owner and Engineer, and provided Owner or Engineer do not remedy such suspension or failure within that time, terminate the contract and recover from Owner payment on the same terms as provided in paragraph for Owner Termination for Convenience, hereinabove. Contractor, however, cannot terminate the Contract due to any dispute (i) concerning the amount of payment due Contractor or (ii) any amounts Owner is withholding from Contractor.

B. In lieu of terminating the Contract and without prejudice to any other right or remedy, if Engineer has failed to act on an Application for Payment within 30 days after it is submitted, or Owner has failed for 30 days to pay Contractor any sum finally determined to be due, Contractor may, 7 days after written notice to Owner and Engineer, stop the Work until payment is made of all such amounts due Contractor, including interest thereon. The provisions of this paragraph are not intended to preclude Contractor from submitting a Change Proposal for an adjustment in Contract Price or Contract Times or otherwise for expenses or damage directly attributable to Contractor's stopping the Work as permitted by this paragraph. Contractor, however, cannot stop the Work due to any dispute (i) concerning the amount of payment due Contractor or (ii) any amounts Owner is withholding from Contractor.

101. **TITLE TRANSFER**

Title and Risk of Loss of goods shall not pass to City of Port Orange until City of Port Orange actually receives and takes possession of the goods at the point or points of delivery. Receiving times may vary with the using department. Generally, deliveries may be made between 8:30 a.m. and 3:00 p.m., Monday through Friday. The contractor is advised to consult the using department for instructions. The place of delivery shall be specified in the bid specification and/or on the purchase order as a "Deliver To:" address.

102. **UNBALANCED BID**

A mathematically unbalanced bid is where a bidder places a high price on some items and a low price on other items in a unit price contract. A bid is materially unbalanced when there is reasonable doubt that acceptance of a mathematically unbalanced bid will result in the lowest overall cost to the City. Unbalanced bids will be rejected if the prices are deemed materially unbalanced.

103. **USE OF SOLICITATION FORMS**

The bidder shall complete the appropriate solicitation form(s) included in the solicitation. All blanks on the solicitation forms shall be completed. If a question or confirmation is not applicable, it should be answered with an "N/A." Supplemental information may be attached to the solicitation forms. Failure to fully complete the

appropriate solicitation forms may result in disqualification of the response. If additional space for a response is required, attach an additional page to the page on which the question is stated. Clearly identify the number of the question to which the response is attached. Further, if additional solicitation form pages are needed, photocopy or replicate as appropriate, and attach such additional pages to the page on which the question or chart is stated. The signature of the Authorized Person or entity must be that of an officer, partner or a sole proprietor of the entity making the response. The original response, and each copy submitted shall contain an original signature on the Bidder's Acknowledgement Form contained in each solicitation.

104. **VARIANCES**

For purposes of response evaluation, bidders must indicate any variances, no matter how slight, contained in the response. No variations or exceptions by a bidder will be considered or deemed a part of the response submitted unless such variances or exceptions are listed in the response and referenced in the space provided on the response pages. If variances are not stated, or referenced as required, it will be assumed that the product or service complies with the City's terms, conditions and specifications. By receiving a response, the City does not necessarily accept any variances contained in the response. All variances submitted are subject to review and approval by the City. If any response contains material variances that, in the City's sole opinion, make that response conditional in nature, the City reserves the right to reject the response or part of the response that is declared, by the City, as conditional.

105. **WAIVER OF IRREGULARITIES**

The City of Port Orange reserves the right to waive and/or reject any non-substantial irregularity in responses received whenever such waiver or rejection is in the best interest of the City and/or it does not meet the minimum requirements set forth. All reasonably responsive responses will be considered. However, the City reserves the right to waive formalities or informalities in responses, to reject, with or without cause, any or all responses or portions of responses, or to interview or not interview individual bidders, and to accept any responses or portions of responses deemed to be in the best interest of the City. The City Council shall grant the City Manager to waive any and all non-substantial irregularities in any and all formal solicitations. (Code 1981, § 8-29; Ord. No. 2015-17, § 1, 5-19-2015)

SECTION 6 – SPECIAL REQUIREMENTS/INSTRUCTIONS

PERIOD OF OFFER VALIDITY:

Bids offered in this ITB must remain firm for a period of one-hundred-twenty (120) days from the ITB opening date.

AWARD RECOMMENDATION:

It is the intent of the City to award a contract to the lowest responsive and responsible bidder as outlined in Section 2 and (Attachment 1) Schedule of Unit Pricing.

CONTRACT TERM/COMPLETION TIME:

The date of commencement of the Work shall be fixed in a notice to proceed issued by the City. The contractor shall achieve Substantial Completion of the Work not later than two hundred forty-six **(246)** calendar days from the notice to proceed and Final Completion two hundred seventy **(270)** calendar days from the notice to proceed.

ELIGIBILITY OF BIDDER:

To be eligible to respond to this ITB, the bidders must demonstrate proof of prior experience working with the services described in this ITB. Please provide eligibility experience with your submittal by completing Form 7.6 Statement of Bidder's Qualifications in its entirety.

Prime contractor is to be prequalified in the work class: Sidewalk and Flexible Paving.

PROOF OF E-VERIFY REGISTRATION

Bidders who do not include proof of E-Verify registration with form 7.10 City of Port Orange Contractor E-Verify Affidavit may be deemed non-responsive. Include printed pages from the E-Verify website showing company name and E-Verify registration number.

LICENSES AND PERMITS

Contractor is responsible for all applicable local and state licenses, permits and fees.

MAINTENANCE

The paragraph entitled **MAINTENANCE** (#58 of Section 5 - General Terms and Conditions) does NOT apply to this Invitation to Bid.

PAYMENT & PERFORMANCE BOND

The bidder must be able to obtain payment and performance bonds from a surety company licensed in Florida and must submit proof of their present bonding capacity with their bid submittal package in the form of a current (not older than 3 months) letter from bidder's bonding agent. Bidder's bonding capacity must be equal to or greater than 100% of the total amount bid. Bidders who do not include their present bonding capacity letter in their bid package may be deemed non-responsive.

Upon award, the successful bidder will be required to furnish and pay for a Payment and Performance Bond equal to one hundred percent (100%) of the contract amount to be recorded by the City, with the Clerk of the Circuit Court, Volusia County, Florida. After recording, the City will furnish to the contractor the recording information for the bond to evidence that the contractor has met the requirement of Florida law. The City will bill the cost of recording to the contractor.

BID BOND:

A certified check or bank draft, payable to the City of Port Orange, FL or a satisfactory bid bond executed by the bidder and an acceptable surety in the amount equal to (5%) of the total amount of the bid shall be submitted with each bid. If submitting a bid bond in lieu of a certified check or bank draft, the **original** bid bond must be included with bid submittal. If submitting a bid bond in lieu of a certified check or bank draft, bidders who do not include their **original** bid bond with their submittal may be deemed non-responsive.

ADDITIONAL INDEMNIFICATION REQUIREMENTS:

The following is hereby added to Item #47, Section 5 – General Terms and Conditions: The following indemnification will be included in all contracts with contractors, subcontractors, consultants, or subconsultants (each referred to as "Entity" for the purposes of the below indemnification) who perform work in connection with this project:

"To the extent provided by law, [ENTITY] shall indemnify, defend, and hold harmless the City of Port Orange and the State of Florida, Department of Transportation, including the Department's officers, agents, and employees, against any actions, claims, or damages arising out of, relating to, or resulting from negligent or wrongful act(s) of [ENTITY], or any of its officers, agents, or employees, acting within the scope of their office or employment, in connection with the rights granted to or exercised by [ENTITY].

The foregoing indemnification shall not constitute a waiver of the Department's or City's sovereign immunity beyond the limits set forth in Florida Statutes, Section 768.28. Nor shall the same be construed to constitute agreement by [ENTITY] to indemnify the City of Port Orange for the negligent acts or omissions of the City of Port Orange, its officers, agents, or employees, or third parties. Nor shall the same be construed to constitute agreement by [ENTITY] to indemnify the Department for the negligent acts or omissions of the Department, its officers, agents, or employees, or third parties. This indemnification shall survive the termination of this Agreement."

ADDITIONAL INSURANCE REQUIREMENTS:

The following language is hereby added to Item #51, Section 5 – General Terms and Conditions: In addition to naming the City as additional named insured, the awarded firm must also list the State of Florida, Department of Transportation (FDOT) as additional named insured.

SAFETY:

Contractor will comply with all applicable OSHA, State of Florida Safety Regulations and comply with all construction safety requirements of local authorities having jurisdiction. Contractor shall exercise all due caution to exclude the public from the work area and especially from contact with any hazardous materials.

REPAIR OF DAMAGES:

It is the responsibility of the contractor to repair any damages incurred in the area that are directly related to the project. When damages occur, the City of Port Orange Representative is to be notified and shall inspect the repairs upon completion.

NON-DISCRIMINATION:

The following is hereby added to Item #60, Section 5 – General Terms and Conditions: In accordance with Section 287.134, Florida Statutes, an entity or affiliate who has been placed on the Discriminatory Vendor List, kept by the Florida Department of Management Services, may not submit a bid on a contract to provide goods or services to a public entity; may not submit a bid on a contract with a public entity for the construction or repair of a public building or public work; may not submit bids on leases of real property to a public entity; may not be awarded or perform work as a contractor, supplier, subcontractor or consultant under a contract with any public entity; and may not transact business with any public entity.

TAXES:

The paragraph entitled **TAXES** (#98 of Section 5 - General Terms and Conditions) does NOT apply to this Invitation to Bid. The City's tax-exempt status does not apply to this project.

[Remainder of page left intentionally blank]

SECTION 7 – REQUIRED FORMS

FORM 7.1 – BID SUBMITTAL CHECKLIST

_____ Form 7.2 – Bidder's Acknowledgement Form

_____ Form 7.3 – Addendum and Change Order Procedure Acknowledgement

_____ Form 7.4 – Drug Free Preference Statement

_____ Form 7.5 – Public Entity Crimes Statement

_____ Form 7.6 – Statement of Bidder's Qualifications

_____ Form 7.7 – Professional References for Previous Experience

_____ Form 7.8 – List of Subcontractors

_____ Form 7.9 – Scrutinized Companies Certification

_____ Form 7.10 – E-Verify Affidavit

_____ Form 7.11 – Affidavit of Compliance with Section 287.138, Florida Statutes

_____ Form 7.12 – No Submittal Response Form

_____ (Attachment 1) – Schedule of Unit Pricing

_____ Affidavit Regarding Labor and Services

_____ Current Bonding Capacity Letter (as outlined in Section 6)

_____ Copy of all currently held Licenses (Contractor, Sunbiz, etc.)

_____ Original Bid Bond

_____ Submission of one (1) original marked "ORIGINAL" and one (1) digital (flash drive) version in PDF format

BY: _____
Name of Business

_____
Authorized Signature

_____
Date

This document must be completed and returned with your Submittal

FORM 7.2 – BIDDER'S ACKNOWLEDGEMENT FORM

I have carefully examined the Invitation to Bid (ITB), Instructions to Bidders, General and/or Special Conditions, Specifications and any other documents accompanying or made a part of this invitation.

I hereby propose to furnish the goods or services specified in the ITB at the prices or rates as finally negotiated. I agree that my bid will remain firm for a period of up to one-hundred-twenty (120) days in order to allow the City of Port Orange adequate time to evaluate the proposed bid. Furthermore, I agree to abide by all conditions of the ITB.

I certify that all information contained in the bid is truthful to the best of my knowledge and belief. I further certify that I am duly authorized to submit this bid on behalf of the Bidder/Contractor as its act and deed and that the Bidder/Contractor is ready, willing and able to perform if awarded the contract.

I further certify that this bid is made without prior understanding, contract, connection, discussion or collusion with any person, firm or corporation submitting a bid for the same product or service; no officer, employee or agent of the City of Port orange City Council or of any other Bidder interested in said ITB; and that the undersigned executed this Bidder's Acknowledgement with full knowledge and understanding of the matters therein contained and was duly authorized to do so.

I further certify that having read and examined the specifications and documents for the designated services and understanding the general conditions for the contract under which services will be performed, does hereby propose to furnish all labor, equipment and material to provide the services set forth in the ITB.

I hereby declare that the following listing states any clarifications, any and all variations from and exceptions to the requirements of the specifications and documents. The undersigned further declares that the "work" will be performed in strict accordance with such requirements and understands that any exceptions to the requirements of the specifications and documents may render the bid non-responsive.

NO EXCEPTIONS ALLOWED AFTER THE BID IS SUBMITTED:

Please check one: ☐I take NO exceptions. ☐Exceptions (list below; add additional pages if necessary):

_____

_____

_____ _____

Name of Business Mailing Address

_____ _____

Authorized Signature City, State & Zip Code

_____ _____

Printed Name and Title Telephone Number

_____ _____

Federal Identification No. E-mail Address

STATE OF:_____ COUNTY OF: _____

The foregoing instrument was acknowledged before me by means of ☐physical presence or ☐online notarization, this

_____ day of _____, 2025, by_____ and who:

☐Is personally known to me; or ☐ has produced _____ as identification.

_____Notary Public, State of _____

Printed, typed or stamped name, commission and expiration:

This document must be completed and returned with your Submittal

FORM 7.3 – ADDENDUM AND CHANGE ORDER PROCEDURE ACKNOWLEDGEMENT

ADDENDUM ACKNOWLEDGEMENT

I have carefully examined the Invitation to Bid (ITB), Instructions to Bidders, General and/or Special Conditions, Specification and any other documents accompanying or made a part of this ITB.

I acknowledge receipt and incorporation of the following addenda and the cost, if any, of such revisions has been included in the price of the bid proposal.

Addendum#_____ Date:_____ Addendum#_____ Date:_____

Addendum#_____ Date:_____ Addendum#_____ Date:_____

CHANGE ORDER PROCEDURE ACKNOWLEDGEMENT

If awarded the Contract for this Solicitation, I acknowledge that no oral statement of any person shall modify or otherwise change or affect the terms, conditions or specifications stated in the resulting contract. All change order requests shall be made in writing by the Contractor for review by the Contract Administrator for the City of Port Orange. No work shall be performed as set forth in the change order until the Contractor receives an executed Purchase Order for the requested change.

I acknowledge the above statements regarding Addendum Acknowledgement and Change Order Procedures:

_____
Name of Business

_____
Authorized Signature

_____
Printed Name and Title

STATE OF:_____ COUNTY OF: _____

The foregoing instrument was acknowledged before me by means of ☐physical presence or ☐online notarization, this

_____ day of _____, 2025, by_____ and who:

☐Is personally known to me; or ☐ has produced _____ as identification.
_____

Notary Public, State of _____
Printed, typed or stamped name, commission and expiration:

This document must be completed and returned with your Submittal

FORM 7.4 – DRUG-FREE PREFERENCE STATEMENT

IDENTICAL TIE BIDS – Preference shall be given to businesses with drug-free workplace programs. Whenever two or more bids, proposals, statements or replies are equal with respect to price, quality and service are received by the City for procurement of commodities or contractual services, a bid received from a business that certifies that it has implemented a drug-free workplace program shall be given preference in the award process. Established procedures for processing tie bids will be followed if none of the tied bidders have a drug-free workplace program.

In order to have a drug-free workplace program, a business shall:

1. Publish a statement notifying employees that the unlawful manufacture, distribution, dispensing, possession or use of a controlled substance is prohibited in the workplace and specifying the actions that will be taken against employees for violations of such prohibition.

2. Inform employees about the dangers of drug abuse in the workplace, the business's policy of maintaining a drug-free workplace, any available drug counseling, rehabilitation and employee assistance programs and the penalties that may be imposed upon employees for drug abuse violations.

3. Give each employee engaged in providing the commodities or contractual services that are under a bid a copy of the statement specified in subsection (1).

4. In the statement specified in subsection (1), notify the employees that, as a condition of working on the commodities or contractual services that are under the bid, the employee will abide by the terms of the statement and will notify the employer of any conviction of, or plea of guilty or nolo contendere to, any violation of chapter 893 or of any controlled substance the law of the United States or any state, for a violation occurring in the workplace no later than five (5) days after such conviction.

5. Impose a sanction on or require the satisfactory participation in a drug abuse assistance or rehabilitation program if such is available in the employee's community, by an employee who is so convicted.

6. Make a good faith effort to continue to maintain a drug-free workplace through implementation of Section 287.087, Florida Statutes.

As an authorized representative of the firm, I certify that this firm complies fully with the above requirements.

_____
Name of Business

_____
Authorized Signature

_____
Printed Name and Title

STATE OF:_____ COUNTY OF: _____

The foregoing instrument was acknowledged before me by means of ☐physical presence or ☐online notarization, this _____ day of _____, 2025, by_____ and who:

☐Is personally known to me; or ☐ has produced _____ as identification.

_____
Notary Public, State of _____
Printed, typed or stamped name, commission and expiration:

This document must be completed and returned with your Submittal

FORM 7.5 – SWORN STATEMENT ON PUBLIC ENTITY CRIMES
UNDER SECTION 287.133(3)(A), FLORIDA STATUTES
(To be signed in the presence of a notary public or other authorized to administer oaths.)

Before me, the undersigned Authority, personally appeared affiant_____, who, being by me first duly sworn, made the following statement:

1. The business address of _____(name of Offeror or business) is

   _____.

2. My relationship to _____(name of Offeror or business) is _____

   _____(relationship such as sole proprietor, partner, president, vice president.)

3. I understand that a public entity crime as defined in Section 287.133 of the Florida Statutes includes a violation of any state or federal law by a person with respect to and directly related to the transaction of business with any public entity in Florida or with an agency or political subdivision of any other state or with the United States, including, but not limited to, any proposal or contract for goods or services to be provided to any public entity or such and agency or political subdivision and involving antitrust, fraud, theft, bribery, collusion, racketeering, conspiracy or material misrepresentation.
4. I understand that "convicted" or "conviction" is defined by the Florida Statutes to mean a finding of guilt or a conviction of a public entity crime, with or without an adjudication of guilt, in any federal or state trial court of record relating to charges brought by indictment or information after July 1, 1989, as a result of a jury verdict, non-jury trial, or entry of a plea of guilt or nolo contendere.
5. I understand that "affiliate" is defined by the Florida Statutes to mean (1) a predecessor or successor of a person or a corporation convicted of a public entity crime, or (2) an entity under the control of any natural person who is active in the management of the entity and who has been convicted of a public entity crime, or (3) those officers, directors, executives, partners, shareholders, employees, members, and agents who are active in the management of an affiliate, or (4) a person or corporation who knowingly entered into a joint venture with a person who has been convicted of a public entity crime in Florida during the preceding 36 months.
6. Neither the Offeror or contractor, nor any officer, director, executive, partner, shareholder, employee, member or agent who is active in the management of the Offeror or contractor, nor any affiliate of the Offeror or contractor has been convicted of a public entity crime subsequent to July 1, 1989. **(Draw a line through paragraph 6 if paragraph 7 below applies.)**
7. There has been a conviction of a public entity crime by the Offeror or contractor, or an officer, director, executive, partner, shareholder, employee, member or agent of the Offeror or contractor who is active in the management of the Offeror or contractor or an affiliate of the Offeror or contractor. A determination has been made pursuant to Section 287.133(3) by order of the Division of Administrative Hearings that it is not in the public interest for the name of the convicted person or affiliate to appear on the convicted bidder list. The name of the convicted person or affiliate is: _____. A copy of the order of the Division Administrative Hearing is attached. **(Draw a line through paragraph 7 if paragraph 6 above applies)**

_____
Name of Business

_____
Authorized Signature

STATE OF:_____

COUNTY OF: _____

_____
Printed Name and Title

The foregoing instrument was acknowledged before me by means of ☐physical presence or ☐online notarization, this _____ day of _____, 2025, by_____ and who:

☐Is personally known to me; or ☐ has produced _____ as identification.

_____Notary Public, State of _____
Printed, typed or stamped name, commission and expiration:

This document must be completed and returned with your Submittal

FORM 7.6 – STATEMENT OF BIDDER'S QUALIFICATIONS

The undersigned warrants that he or she is duly authorized to complete this document, and hereby affirms that the information contained in Form 7.6 is complete, true and correct to the best of his or her knowledge and belief. If necessary, question may be answered on separate paper and attached with any additional information that may be pertinent.

A. Name of Bidder: _____

B. Permanent main office address: _____

C. Date organized: _____

D. If a corporation, where incorporated: _____

E. How many years have you been engaged in the business under your present firm or trade name? _____

F. Contracts on hand: (List these, showing amount of each contract and the appropriate anticipated dates of completion.) **USE SEPARATE SHEET & ATTACH TO SUBMITTAL**

G. General character of work performed by your company: _____

H. Have you ever failed to complete any work awarded to you? If so, where and why?_____

I. Have you ever defaulted on a contract? If so, where and why? _____

J. List your major equipment currently owned or leased: **USE SEPARATE SHEET & ATTACH TO SUBMITTAL**

K. Background and experience of the principal members of your organization, including the officers: USE **SEPARATE SHEET & ATTACH TO SUBMITTAL**

L. Credit currently available: $_____

M. Give bank name, contact name and phone number: _____

N. Will you, upon request, fill out a detailed financial statement and furnish any other information that may be required by the Owner? ☐Yes ☐No

The undersigned hereby authorizes and requests any person, firm or corporation to furnish any information requested by the Owner in verification of the recitals compromising the Statement of Bidder's Qualifications.

_____
Name of Business

_____
Authorized Signature

STATE OF:_____

COUNTY OF: _____

_____
Printed Name and Title

The foregoing instrument was acknowledged before me by means of ☐physical presence or ☐online notarization, this _____ day of _____, 2025, by_____ and who:

☐Is personally known to me; or ☐ has produced _____ as identification.

_____Notary Public, State of _____

Printed, typed or stamped name, commission and expiration:

This document must be completed and returned with your Submittal

FORM 7.7 – PROFESSIONAL REFERENCES FOR PREVIOUS EXPERIENCE

The Bidder proposes that they are qualified to perform the referenced work and has successfully done so on recent projects similar in nature and size. The City reserves the right to check references and confirm information provided herein. **Please provide three (3) current and correct references from clients for similar services. (DO NOT include the City of Port Orange)**

1. Company Name: _____

   Contact Person: _____

   City, State: _____

   Telephone Number: _____

   Email Address: _____

   Description of goods/services provided: _____

   Contract Amount: _____

   Start/End Date of Contract: _____

2. Company Name: _____

   Contact Person: _____

   City, State: _____

   Telephone Number: _____

   Email Address: _____

   Description of goods/services provided: _____

   Contract Amount: _____

   Start/End Date of Contract: _____

3. Company Name: _____

   Contact Person: _____

   City, State: _____

   Telephone Number: _____

   Email Address: _____

   Description of goods/services provided: _____

   Contract Amount: _____

   Start/End Date of Contract: _____

This document must be completed and returned with your Submittal.

FORM 7.7 – PROFESSIONAL REFERENCES FOR PREVIOUS EXPERIENCE (page 2)

LISTING OF PREVIOUS EXPERIENCE
COMMERCIAL CLIENT LIST

The Bidder proposes that they are qualified to perform the referenced work and has successfully done so on recent projects similar in nature and size. A minimum of three (3) projects must be listed below. The Owner reserves the right to check references and confirm information provided herein.

List clients to whom you currently provide or have in the past provided equal or similar services to those required under the City's contract as outlined in this bid package. A minimum of three (3) projects shall be listed below in order to bid on this contract. The Owner reserves the right to check references and confirm information provided herein.

1. Contact Name: _____

   Phone: _____

   Current Client: ☐Yes ☐ No

   Number of years of service provided: _____

   Description of service: _____

   _____

2. Contact Name: _____

   Phone: _____

   Current Client: ☐Yes ☐ No

   Number of years of service provided: _____

   Description of service: _____

   _____

3. Contact Name: _____

   Phone: _____

   Current Client: ☐Yes ☐ No

   Number of years of service provided: _____

   Description of service: _____

   _____

This document must be completed and returned with your Submittal.

FORM 7.8 – LISTING OF SUBCONTRACTORS

The Bidder proposes that the following subcontractors are qualified to perform the referenced work and have successfully done so on recent projects similar in nature and size. All subcontractors whose work product accounts for 5% or more of the total contract value shall be listed. Upon approval of subcontractors listed, the successful **Bidder shall not substitute subcontractors without approval from the City Representative**. Bidder shall attach additional sheets as necessary.

Subcontractor No. 1

Name: _____

Description of Work: _____

Percent of Contract Price: _____

Previous Experience Together: ☐Yes ☒No

Subcontractor No. 2

Name: _____

Description of Work: _____

Percent of Contract Price: _____

Previous Experience Together: ☐Yes ☐No

Subcontractor No. 3

Name: _____

Description of Work: _____

Percent of Contract Price: _____

Previous Experience Together: ☐Yes ☐No

Subcontractor No. 4

Name: _____

Description of Work: _____

Percent of Contract Price: _____

Previous Experience Together: ☐Yes ☐No

Subcontractor No. 5

Name: _____

Description of Work: _____

Percent of Contract Price: _____

Previous Experience Together: ☐Yes ☐No

This document must be completed and returned with your submittal

FORM 7.9 SCRUTINIZED COMPANIES CERTIFICATION

(To be signed in the presence of a notary public or other officer authorized to administer oaths.)

SCRUTINIZED COMPANIES CERTIFICATION PURSUANT TO SECTION 287.135, FLORIDA STATUTES

I, _____, on behalf
(Print Name and Title)

of_____ ("Company"), certify that _____
(Company Name) (Company Name)

does not:
1. Participate in a boycott of Israel; and
2. Is not on the Scrutinized Companies with Boycott Israel List; and
3. Is not on the Scrutinized Companies with Activities in Sudan List; and
4. Is not on the Scrutinized Companies with Activities in the Iran Petroleum Energy Sector List; and
5. Has not engaged in business operations in Syria.

Submitting a false certification shall be deemed a material breach of contract. The City of Port Orange shall provide notice, in writing, to the Company of the City's determination concerning the false certification. The Company shall have ninety (90) days following receipt of the notice to respond in writing and demonstrate that the determination of false certification was made in error. If the Company does not demonstrate that the City's determination of false certification was made in error, then the City shall have the right to terminate the contract and seek civil remedies pursuant to Florida Statute § 287.135.

Section 287.135, Florida Statutes prohibits the City from: 1) Contracting with companies for goods or services in any amount if at the time of bidding on, submitting a proposal for, or entering into or renewing a contract if the company is on the Scrutinized Companies that Boycott Israel List, created pursuant to Section 215.4725, F.S. or is engaged in a boycott of Israel; and 2) Contracting with companies for goods or services over $1,000,000.00 that are on either the Scrutinized Companies with activities in the Iran Petroleum Energy Sector List, created pursuant to s. 215.473, or are engaged in business operations in Syria.

As the person authorized to sign on behalf of the Company, I hereby certify that the company identified above in the section entitled "Company Name" does not participate in any boycott of Israel, is not listed on the Scrutinized Companies that Boycott Israel List, is not listed on either the Scrutinized Companies with activities in the Iran Petroleum Energy Sector List and is not engaged in business operations in Syria. I understand that pursuant to Section 287.135, Florida Statutes, the submission of a false certification may subject the company to civil penalties, attorney's fees, and/or costs. I further understand that any contract with the City for goods or services may be terminated at the option of the City if the company is found to have submitted a false certification or has been placed on the Scrutinized Companies with Activities in Sudan List or the Scrutinized Companies with Activities in the Iran Petroleum Energy Sector List.

_____ _____
COMPANY NAME SIGNATURE

_____ _____
PRINT NAME TITLE

STATE OF FLORIDA COUNTY OF: _____

The foregoing instrument was acknowledged before me by means of ☐physical presence or ☐online notarization, this _____ day of _____, 2025, by_____ and who:

☐Is personally known to me; or ☐ has produced _____ as identification.

_____Notary Public, State of _____
Printed, typed or stamped name, commission and expiration:

This document to be completed and returned with your Submittal

FORM 7.10 – E-VERIFY AFFIDAVIT

CITY OF PORT ORANGE

CONTRACTOR E-VERIFY AFFIDAVIT

IN ACCORDANCE WITH SECTION 448.095, FLORIDA STATUTES

Project Name: _____

Solicitation Number: _____

I, the undersigned hereby certify that _____ (insert contractor company name) does not employ, contract with or subcontract with an unauthorized alien, and is otherwise in full compliance with Section 448.095, Florida Statutes.

I acknowledge that it is my responsibility to ensure full compliance with Section 448.095, Florida Statutes. I am aware enrollment in the E-Verify system for employers can be done at www.e-verify.gov.

A true and correct copy of _____ (insert contractor company name) proof of registration in the E-Verify system is attached to this Affidavit.

By affixing my signature below, I hereby affirm that I am duly authorized to bind the company reference herein and I will comply with all applicable E-Verify requirements.

_____ _____

Print or Type Name, Title Signature of Affiant

_____ _____

Federal Employer ID Number (FEIN) E-Verify Number

STATE OF FLORIDA

COUNTY OF: _____

The foregoing instrument was acknowledged before me by means of ☐physical presence or ☐online notarization, this _____ day of _____, 2025, by_____ and who:

☐Is personally known to me; or ☐ has produced _____ as identification.

_____Notary Public, State of _____

Printed, typed or stamped name, commission and expiration:

This document to be completed and returned with your Submittal

FORM 7.11 – AFFIDAVIT OF COMPLIANCE WITH SECTION 287.138, FLORIDA STATUTES

AFFIDAVIT OF COMPLIANCE WITH SECTION 287.138, FLORIDA STATUTES CONTRACTING WITH FOREIGN ENTITIES OF CONCERN

The undersigned ("Affiant"), on behalf of the entity listed below ("Entity"), hereby attests under penalty of perjury as follows:

1. Affiant is the _____ of _____
   (Title) (Business Name)
   which does business in the State of Florida, hereinafter called the "Entity".
2. Entity is not owned by the government of a foreign country of concern, as defined in Section 287.138 (1) (c), Florida Statutes.
3. The government of a foreign country of concern does not have a controlling interest in Entity, as defined in Section 287.138 (1)(a), Florida Statutes.
4. Entity is not organized under the laws of, and does not have a principal place of business in, a foreign country of concern.
5. Entity is not owned or controlled by the government of a foreign country of concern.
6. For purposes of this affidavit, a foreign country of concern means the People's Republic of China, the Russian Federation, the Islamic Republic of Iran, the Democratic People's Republic of Korea, the Republic of Cuba, the Venezuelan regime of Nicolas Maduro, or the Syrian Arab Republic, including any agency of or any other entity of significant control of such foreign country of concern, as defined in Section 287.138(1)(c), Florida Statutes.

The undersigned is authorized to execute this affidavit on behalf of the Entity.

Date: _____, 20___ Signed: _____

Entity: _____ Name: _____

Title: _____

STATE OF: _____ COUNTY OF: _____

The foregoing instrument was acknowledged before me by means of ☐physical presence or ☐online notarization, this _____ day of _____, 2025, by_____ and who:

☐Is personally known to me; or ☐ has produced _____ as identification.

_____

Notary Public, State of Florida at Large: (seal)

Printed Name/Seal of Notary, Commission and Expiration Date:

My commission expires: _____

This document must be completed and returned with your Submittal

FORM 7.12 – NO SUBMITTAL RESPONSE FORM

If your company will not be submitting a proposal in response to this solicitation, please complete this form and return via e-mail prior to the solicitation due date established within to:

City of Port Orange
Purchasing Division
1000 City Center Circle
Port Orange, FL 32129
purchdiv@port-orange.org

This information will assist the Purchasing Division in the preparation of future solicitations.

Solicitation: **ITB #25-13 - 439865-3-54-01 SJR2C Loop Trail (Spruce Creek Rd.) From S. of Selin Circle to Herbert Street**

Company Name: _____

Contact Person Name & Title: _____

Address: _____

Telephone: _____ Email Address: _____

Please check a reason for a "no response".

☐Specifications "too tight" or geared toward on brand or manufacturer (please explain below)

☐Insufficient time to respond

☐Specifications unclear (please explain below)

☐We do not offer this product/service or an equivalent

☐Our product schedule does not permit us to perform within stated timeline for the project

☐Unable to meet specifications

☐Unable to meet bond requirements

☐Unable to hold prices firm throughout the term of the contract period

☐Unable to meet insurance requirements

☐Other: _____

Print Name: _____

Signature: _____ Date:_____

Additional Information:

_____

_____

_____

_____

If submitting this form, only this form needs to be returned. It is not necessary to return the entire solicitation package.

(ATTACHMENT 1) SCHEDULE OF UNIT PRICING
CITY OF PORT ORANGE
ITB #25-13
439865-3-54-01 SJR2C Loop Trail (Spruce Creek Rd.) form South of Selin Circle to Herbert Street
Completed (Attachment 1) Schedule of Unit Pricing MUST be included with Bid Submission

Bidders are required to complete all fields shaded in green.

(ATTACHMENT 1) SCHEDULE OF UNIT PRICING MUST BE SIGNED

NAME OF BUSINESS:	
CONTACT PERSON:	
EMAIL ADDRESS:	
AUTHORIZED SIGNATURE:	

ALL UNIT PRICING IN ACCORDANCE WITH SPECIFICATIONS - AWARD WILL BE MADE BASED ON GRAND TOTAL PRICING FOR ALL ITEMS

BID ITEMS - PER SECTION 3 - SCOPE OF WORK

ITEM #	ITEM DESCRIPTION	QTY	UNIT of MEASURE	UNIT PRICE	EXTENDED PRICE
0101 1	MOBILIZATION	1	LS	$ -	$ -
0102 1	MAINTENANCE OF TRAFFIC	1	LS	$ -	$ -
0104 10 3	SEDIMENT BARRIER	5,168	LF	$ -	$ -
0104 11	FLOATING TURBIDITY BARRIER	200	LF	$ -	$ -
0104 18	INLET PROTECTION SYSTEM	3	EA	$ -	$ -
0110 1 1	CLEARING & GRUBBING	0.689	AC	$ -	$ -
0110 2 2	SELECTIVE CLEARING AND GRUBBING, AREAS WITH TREES TO REMAIN	0.529	AC	$ -	$ -
0110 23	TREE REMOVAL	5	EA	$ -	$ -
0110 4 10	REMOVAL OF EXISTING CONCRETE	189	SY	$ -	$ -
0120 1	REGULAR EXCAVATION	68.0	CY	$ -	$ -
0120 6	EMBANKMENT	215.0	CY	$ -	$ -
0160 4	TYPE B STABILIZATION	1,038	SY	$ -	$ -
285701-A	DENSE GRADED AGGREGATE BASE (98% MOD PROCTOR DENSITY) 3" THICK	1,038	SY	$ -	$ -
0334 1 12	SUPERPAVE ASPHALTIC CONC, TRAFFIC B	342.5	TN	$ -	$ -
0400 0 11	CONCRETE CLASS NS, GRAVITY WALL INDEX 400-011	83.3	CY	$ -	$ -
0425 1521	INLETS, DT BOT, TYPE C,<10'	3	EA	$ -	$ -
0425 5	MANHOLE, ADJUST	1	EA	$ -	$ -
0430174118	PIPE CULVERT, OPTIONAL MATERIAL, ROUND, 18"SD	131	LF	$ -	$ -
0430174124	PIPE CULVERT, OPTIONAL MATERIAL, ROUND, 24"SD	29	LF	$ -	$ -
0430982125	MITERED END SECTION, OPTIONAL ROUND, 18" CD	3	EA	$ -	$ -
0430982129	MITERED END SECTION, OPTIONAL ROUND, 24" CD	1	EA	$ -	$ -
0430984125	MITERED END SECTION, OPTIONAL ROUND, 18" SD	1	EA	$ -	$ -
0515 1 2	PIPE HANDRAIL - GUIDERAIL, ALUMINUM	308	LF	$ -	$ -
0520 1 10	CONCRETE CURB & GUTTER, TYPE F	180	LF	$ -	$ -
0522 1	CONCRETE SIDEWALK AND DRIVEWAYS, 4" THICK	485	SY	$ -	$ -
0522 2	CONCRETE SIDEWALK AND DRIVEWAYS, 6" THICK	284	SY	$ -	$ -
0527 2	DETECTABLE WARNINGS	287	SF	$ -	$ -
0570 1 2	PERFORMANCE TURF, SOD	2,558	SY	$ -	$ -
0630 2 11	CONDUIT, FURNISH & INSTALL, OPEN TRENCH	364	LF	$ -	$ -
0630 2 12	CONDUIT, FURNISH & INSTALL, DIRECTIONAL BORE	120	LF	$ -	$ -
0630 2 14	CONDUIT, FURNISH & INSTALL, ABOVEGROUND	90	LF	$ -	$ -
0630 2 15	CONDUIT, FURNISH & INSTALL, BRIDGE MOUNT	697	LF	$ -	$ -
0632 7 2	SIGNAL CABLE- REPAIR/REPLACE/OTHER, FURNISH & INSTALL	50	LF	$ -	$ -
0633 6	FIBER OPTIC CABLE LOCATOR	1	DA	$ -	$ -
0635 2 11	PULL & SPLICE BOX, F&I, 13" x 24" COVER SIZE	15	EA	$ -	$ -
0635 3 11	JUNCTION BOX, FURNISH & INSTALL, AERIAL	12	EA	$ -	$ -
0639 1112	ELECTRICAL POWER SERVICE, F&I, OVERHEAD METER PURCHASED BY CONTRACTOR FROM POWER COMPANY	4	AS	$ -	$ -

ITEM #	ITEM DESCRIPTION	QTY	UNIT of MEASURE	UNIT PRICE	EXTENDED PRICE
0639 2 1	ELECTRICAL SERVICE WIRE, FURNISH & INSTALL	360	LF	$ -	$ -
0639 3 11	ELECTRICAL SERVICE DISCONNECT, F&I, POLE MOUNT	1	EA	$ -	$ -
0641 2 12	PRESTRESSED CONCRETE POLE, F&I, TYPE P-II SERVICE POLE	4	EA	$ -	$ -
0646 1 11	ALUMINUM SIGNALS POLE, PEDESTAL	2	EA	$ -	$ -
0646 1 12	ALUMINUM SIGNALS POLE, FURNISH & INSTALL PEDESTRIAN DETECTOR POST	6	EA	$ -	$ -
0653 1 11	PEDESTRIAN SIGNAL, FURNISH & INSTALL LED COUNTDOWN, 1 WAY	2	AS	$ -	$ -
0653 1 60	PEDESTRIAN SIGNAL, REMOVE PED SIGNAL- POLE/PEDESTAL TO REMAIN	2	AS	$ -	$ -
0654 2 12	MIDBLOCK CROSSWALK: RECTANGULAR RAPID FLASHING BEACON, FURNISH & INSTALL-AC, COMPLETE SIGN ASSEMBLY- BACK TO BACK	6	AS	$ -	$ -
0665 1 11	PEDESTRIAN DETECTOR, FURNISH & INSTALL, STANDARD	2	EA	$ -	$ -
0665 1 60	PEDESTRIAN DETECTOR, REMOVE- POLE/PEDESTAL TO REMAIN	2	EA	$ -	$ -
0700 1111	SINGLE COLUMN GROUND SIGN ASSEMBLY, F&I GROUND MOUNT, LESS THAN 12 SF	20	EA	$ -	$ -
0700 1600	SINGLE COLUMN GROUND SIGN ASSEMBLY, REMOVE	3	EA	$ -	$ -
0711 11123	THERMOPLASTIC, STANDARD, WHITE, SOLID, 12" FOR CROSSWALK AND ROUNDABOUT	442	LF	$ -	$ -
0711 11125	THERMOPLASTIC, STANDARD, WHITE, SOLID, 24" FOR STOP LINE AND CROSSWALK	470	LF	$ -	$ -
0711 11160	THERMOPLASTIC, STANDARD, WHITE, MESSAGE OR SYMBOL	2	EA	$ -	$ -
0711 16101	THERMOPLASTIC, STANDARD-OTHER SURFACES, WHITE, SOLID, 6"	0.003	GM	$ -	$ -
0711 17 1	THERMOPLASTIC, REMOVE EXISTING THERMOPLASTIC PAVEMENT MARKINGS- SURFACE TO REMAIN	317	SF	$ -	$ -
0715 1 12	LIGHTING CONDUCTORS, F&I, INSULATED, NO.8 - 6	3,247	LF	$ -	$ -
0715 516-513	LIGHT POLE COMPLETE-SPECIAL DESIGN, F&I, POLE TOP MOUNT, WOOD, 13'	11	EA	$ -	$ -
0715 516-518	LIGHT POLE COMPLETE-SPECIAL DESIGN, F&I, POLE TOP MOUNT, WOOD, 18'	1	EA	$ -	$ -
0751 49	TIMBER PEDESTRIAN BRIDGE	5,472	SF	$ -	$ -
				SUB-TOTAL BID ITEMS:	$ -

ITEMS TO BE LOCALLY FUNDED					
ITEM #	ITEM DESCRIPTION	QTY	UNIT of MEASURE	UNIT PRICE	EXTENDED PRICE
0522 2A	CONCRETE SHARED USE PATH, 7" THICK (HEAVY DUTY) (IN LIEU OF 4" THICK)	47	SY	$ -	$ -
CITY-01	18" WAPRO STAINLESS WASTOP INLINE CHECK VALVE	1	EA	$ -	$ -
				SUB-TOTAL LOCALLY FUNDED ITEMS:	$ -
				GRAND TOTAL ALL ITEMS:	$ -

AFFIDAVIT REGARDING LABOR AND SERVICES

Effective July 1, 2024, pursuant to §787.06(13), Florida Statutes, when a contract is executed, renewed, or extended between a nongovernmental entity and a governmental entity, the nongovernmental entity must provide the governmental entity with an affidavit signed by an officer or a representative of the nongovernmental entity under penalty of perjury attesting that the nongovernmental entity does not use coercion for labor or services.

Nongovernmental Entity's Name: _____
Address: _____
Phone Number: _____
Authorized Representative's Name: _____
Authorized Representative's Title: _____
Email Address: _____

AFFIDAVIT

I, *insert nongovernmental entity's authorized representative name*, as authorized representative attest that *insert nongovernmental entity's name* does not use coercion for labor or services as defined in §787.06, Florida Statutes.

Under penalty of perjury, I declare that I have read the foregoing Affidavit and that the facts stated in it are true.

_____
(Signature of authorized representative) Date

STATE
COUNTY OF
Sworn to (or affirmed) and subscribed before me, by means of ☐ physical presence or ☐ online notarization, this day of , (year), by

_____
Notary Public

_____
Commission Expires
Personally Known ☐ OR Produced Identification ☐
Type of Identification Produced

BID BOND

BID BOND

Bond No.:

KNOW ALL MEN BY THESE PRESENTS that _____, as Contractor, duly authorized to conduct business in the State of Florida, whose principal place of business is located at , Tel.: _____, (hereinafter called "PRINCIPAL"), and _____ , as SURETY, duly authorized to conduct business in the State of Florida, whose principal place of business is located at _____, Tel:_____(hereinafter called "SURETY"), are held and firmly bound unto the City of Port Orange, Florida, as CITY, a Florida municipal corporation, whose address is City of Port Orange, 1000 City Center Circle, Port Orange, Florida 32129, Tel: (386) 506-5501, (hereinafter called "OBLIGEE" or CITY", in the penal sum of_____dollars and (_____)/100 ($_____), lawful money of the United States, for the payment of which sum shall and truly be made, whereof PRINCIPAL and SURETY bind themselves, their heirs, executors, administrators, successors and assigns, jointly and severally, firmly by these presents.

THE CONDITION OF THIS OBLIGATION IS SUCH that, whereas the Principal has submitted the accompanying bid, dated_____, 20_____ , for:

Project Name/Bid No.:

Project Address:

Legal Description: See Attached

Description of Work:

NOW, THEREFORE,

A. If the Principal shall not withdraw said bid withing one hundred twenty (120) days after date of opening of the same, and shall within ten (10) days after the prescribed forms are presented to it for signature, enter into a written contract with the City in accordance with the bid as accepted, and give bonds with good and sufficient surety or sureties, as may be required, for the faithful performance and proper fulfillment of such contract, then the above obligations shall be void and of no effect, otherwise to remain in full force and virtue.

B. In the event of the withdrawal of said bid within the period specified, or the failure to enter into such contract and give such bonds withing the time specified, if the principal shall pay the City the difference between the amount specified in said bid and the amount for which the City may procure the required work and supplies. If the latter amount be in excess of the former, then the above obligations then the above obligations shall be void and of no effect, otherwise to remain in full force and virtue.

IN WITNESS WHEREOF, the above parties have executed this instrument under their several seals, this _____day of_____, 20____, the name and corporate seal of each corporate party being hereto affixed and these presents duly signed by its undersigned representative, pursuant to authority of its governing body.

Note: If the firm is a sole ownership or partnership including limited liability company, two (2) witnesses are required to attest the signature. If the firm is a corporation, then the corporate secretary shall attest and affix the corporate seal (Attach power of attorney to the original bid bond and financial statement of Surety Company).

PRINCIPAL:

_____
Signature

_____
Corporate Officer & Title

ATTEST:

_____
Signature

_____
Corporate Secretary (Affix Corporate Seal)

WITTNESSESS:

_____

_____

ATTEST:

_____
Signature

_____
Corporate Secretary (Affix Corporate Seal)

SURETY:

_____
Attorney-in-Fact (signature)

_____
Name & Title

_____
Name of Local Resident Agent

_____
City, State, Zip

_____
Telephone:
A.M. Best No.:_____ NAIC No.:_____

STATE OF _____

COUNTY OF _____

Before me this day personally appeared _____ (affiant), who, being duly sworn, deposes and says that he/she is the Attorney-in-Fact for the _____(corporate surety) and that this person has been authorized by _____ (corporate surety) to execute the foregoing bond on behalf of the Contractor named therein in favor of the City of Port Orange, Florida.

_____
Signature of Affiant

The foregoing instrument was acknowledged before me by means of ☐physical presence or ☐online notarization, this

_____ day of _____, 2025, by_____ and who:

☐Is personally known to me; or ☐ has produced _____ as identification.

_____

Notary Public, State of _____
Printed, typed or stamped name, commission and expiration:

END OF BID BOND

This document must be completed and returned with your Submittal

Bond No._____

COMBINATION PAYMENT AND PERFORMANCE BOND
FOR
PUBLIC CONSTRUCTION

per Section 255.05, Florida Statutes
Guaranty for Construction of Public Improvements

BY THIS BOND, We, _____, as Principal, and _____, a corporation, as Surety, are bound to_____, aFlorida municipal corporation, herein called "Owner" or sometimes referred to as "City," in the sum of _____ **AND**____**/100 DOLLARS** (**$**_____), for payment of which we bind ourselves, our heirs, personal representatives, successors, and assigns, jointly and severally.

THE CONDITION OF THIS BOND is that if Principal:

1. Performs the terms of that certain Standard Contract for Services, having an effective date of _____, entered into by and between the Principal and the City, for Police Department Duct/HVAC Mold Remediation, hereinafter referred to as the "Contract," being made a part of this bond by reference, at the times and in the manner prescribed in the Contract; and

2. Promptly makes payments to all claimants, as defined in Section 255.05(1), Florida Statutes, supplying Principal with labor, materials, or supplies, used directly or indirectly by Principal in the prosecution of the work provided for in the Contract (the "Work"); and

3. Pays Owner all losses, damages, delay damages (including contractually authorized liquidated damages), expenses, costs, and attorney's fees, including appellate proceedings, that Owner sustains because of a breach or material breach by Principal under the Contract documents; and

4. Performs the guarantee of all work and materials furnished under the Contract for the time specified in the Contract, then this bond is void; otherwise it remains in full force.

Notice of Nonpayment and Time Limitations

Any action instituted by a claimant under this bond for payment must be in accordance with the notice and time limitation provisions in Sections 255.05(2), (8) and (10), Florida Statutes.

Any changes in or under the contract documents and compliance or noncompliance with any formalities connected with the contract or the changes does not affect Surety's obligation under this bond.

IN WITNESS WHEREOF, this performance and payment bond is executed and shall be deemed an original, this__, day of_____, 20__.

Attest: _____

(Principal)

_____ By:_____

(As to Corporate Principal) Secretary

_____ *(Corporate Seal)*

(Witness to Principal)

_____

(Surety)

_____

(Witness to Surety)

By:_____ Name:_____ (Attorney-in-Fact)

(Corporate Seal)

NOTE: ***Date of BOND must not be prior to date of Contract.*** *If Developer/Principal is Partnership, all partners should executeBOND. All BONDS signed by an agent must be accompanied by a certified copy of the authority to act.*

IMPORTANT: Surety companies executing BONDS must appear on the Treasury Department's most current list (Circular 570 asamended) and be authorized to transact business in the State of Florida.

This affidavit must be completed and returned by the Awarded Bidder, upon issuance of a Notice of Intent to Award by the Purchasing Division of the City of Port Orange.

LEASED EMPLOYEE AFFIDAVIT

EXHIBIT CONTRACT #_____

☐ I hereby certify that I do not utilize an employee leasing company or employ leased employees. I further agree to notify the City in the event these circumstances change.

OR

☐ I affirm that an employee leasing company provides my workers' compensation coverage. I further understand that my contract with the employee leasing company limits my workers' compensation coverage to enrolled worksite employees only. My leasing arrangement does not cover un-enrolled worksite employees, independent contractors, uninsured sub-contractors or casual labor exposure.

I hereby certify that 100% of my workers are covered as worksite employees with the employee leasing company. I certify that I do not hire any casual or uninsured labor outside the employee leasing agreement. I agree to notify the City in the event that I have any workers not covered by the employee leasing workers' compensation policy. In the event that I have any workers not subject to the employee leasing arrangement, I agree to obtain a separate workers' compensation policy to cover these workers. I further agree to provide the City with a certificate of insurance providing proof of workers' compensation coverage prior to these workers entering any City jobsite.

I further agree to notify the City if my employee leasing arrangement terminates with the employee leasing company and I understand that I am required to furnish proof of replacement workers' compensation coverage prior to the termination of the employee leasing arrangement.

I certify that I have workers' compensation coverage for all of my workers through the employee leasing arrangement specified below:

Name of Employee Leasing Company: _____

Workers' Compensation Carrier: _____

A.M. Best Rating of Carrier: _____

Inception Date of Leasing Arrangement: _____

I further agree to notify the City in the event that I switch employee leasing companies. I recognize that I have an obligation to supply an updated workers' compensation certificate to the City that documents the change of carrier.

I hereby attest that the information provided in this affidavit is accurate. In addition, I certify that I have read and understand the above statements regarding my responsibility under the workers' compensation coverage.

Name of Contractor: _____

Signature of Owner/Officer: _____

Title: _____ Date: _____

This affidavit must be completed and returned by the Awarded Bidder, upon issuance of a Notice of Intent to Award by the Purchasing Division of the City of Port Orange. Please note, the City of Port Orange does not accept exemptions for Workers' Compensation coverage.

AFFIDAVIT REGARDING WORKERS' COMPENSATION

State of _____

County of _____

I, _____, being duly sworn according to law, deposes and says (it, he, she, they) have accepted the Workers' Compensation laws of the State of Florida, with its supplements and amendments and has insured (its, his, her, their) liability there under accordance with the terms of sail Laws with the _____ Company, under the terms of Policy Number _____ for a period from _____, 20____ to _____, 20____.

WITNESS:

By:_____

Name:_____

CONTRACTOR:

Company:_____

By:_____

Name/Title: _____

Sworn to/Affirmed and subscribed before me this _____ day of _____, 20____, by _____, who is personally known to me or who produced _____ as identification.

_____

NOTARY PUBLIC – STATE OF

Type or Print Name:_____

Commission No.: _____

Commission Expires:_____

(Seal)

AGREEMENT BETWEEN OWNER AND CONTRACTOR FOR CONSTRUCTION CONTRACT (STIPULATED PRICE)

This Agreement is by and between **City of Port Orange, 1000 City Center Circle, Port Orange, Florida 32129** ("Owner") and _____ ("Contractor").

Terms used in this Agreement have the meanings stated in the General Conditions and the Supplementary Conditions.

Owner and Contractor hereby agree as follows:

ARTICLE 1—WORK

1.01 Contractor shall complete all Work as specified or indicated in the Contract Documents. The Work is generally described as follows:

Florida Department of Transportation ("FDOT" and/or "Department") State-Funded Grant Project participation in the SJR2C (St Johns River to Sea) Loop Trail (Spruce Creek Road) from South of Selin Circle to Herbert Street project.

ARTICLE 2—THE PROJECT

2.01 The Project, of which the Work under the Contract Documents is a part, is generally described as follows:

ITB 25-13 - 4398653-2-54-01 SJR2C Loop Trail (Spruce Creek Rd.) From S. of Selin Circle to Herbert Street ("Project").

ARTICLE 3—ENGINEER

3.01 The Project has been designed by the Design Professional specified and Engineer shall serve as Owner's agent for purposes of approving Contractor's payment requests, and as otherwise provided in the Contract documents.

A. The part of the project that pertains to the Work has been designed by Merlynn Anderson, P.E. ("Design Professional of Record") of Stanley Consultants.

B. The Owner has retained _____ ("Engineer"), a _____ corporation, to act as Owner's representative, assume all duties and responsibilities, and have the rights and authority assigned

DRAFT

Copyright© 2018 National Society of Professional Engineers, American Council of Engineering Companies, and American Society of Civil Engineers. All rights reserved.

to Engineer in the Contract Documents in connection with the completion of the Work in accordance with the Contract Documents.

ARTICLE 4—CONTRACT TIMES

4.01 *Time is of the Essence*

A. All time limits for Milestones, if any, Substantial Completion, and completion and readiness for final payment as stated in the Contract Documents are of the essence of the Contract.

4.02 *Contract Times: Dates*

A. Deleted in its entirety.

4.03 *Contract Times: Days*

A. The Work will be substantially complete within **246** days after the date when the Contract Times commence to run as provided in Paragraph 4.01 of the General Conditions, and completed and ready for final payment in accordance with Paragraph 15.06 of the General Conditions.

B. Unless otherwise modified in a Notice to Proceed issued after the Effective Date of the Agreement or an allowable extension of time in accordance with Paragraph 4.01 of the General Conditions, the work shall be finally completed in accordance with Paragraph 15.06 of the General Conditions **270** days from the Notice to Proceed.

4.04 *Milestones* – Deleted in its entirety.

4.05 *Liquidated Damages*

A. Contractor and Owner recognize that time is of the essence as stated in Paragraph 4.01 above and that Owner will suffer financial and other losses if the Work is not completed and Milestones not achieved within the Contract Times, as duly modified. The parties also recognize the delays, expense, and difficulties involved in proving, in a legal or arbitration proceeding, the actual loss suffered by Owner if the Work is not completed on time. Accordingly, instead of requiring any such proof, Owner and Contractor agree that as liquidated damages for delay (but not as a penalty):

1. *Substantial Completion:* Contractor shall pay Owner $0.00 for each day that expires after the time (as duly adjusted pursuant to the Contract) specified above for Substantial Completion, until the Work is substantially complete.

2. *Completion of Remaining Work:* After Substantial Completion, if Contractor shall neglect, refuse, or fail to complete the remaining Work within the Contract Times (as duly adjusted pursuant to the Contract) for completion and readiness for final payment, Contractor shall pay Owner $0.00 for each day that expires after such time until the Work is completed and ready for final payment.

3. Deleted in its entirety.

B. If Owner recovers liquidated damages for a delay in completion by Contractor, then such liquidated damages are Owner's sole and exclusive remedy for such delay, and Owner is precluded from recovering any other damages, whether actual, direct, excess, or consequential, for such delay, except for special damages (if any) specified in this Agreement.

Copyright© 2018 National Society of Professional Engineers, American Council of Engineering Companies, and American Society of Civil Engineers. All rights reserved.

C. Deleted in its entirety.

4.06 *Special Damages* - Deleted in its entirety.

A. Deleted in its entirety.

B. Deleted in its entirety.

C. Deleted in its entirety.

ARTICLE 5—CONTRACT PRICE

5.01 Owner shall pay Contractor for completion of the Work in accordance with the Contract Documents, the amounts that follow, subject to adjustment under the Contract:

A. Deleted in its entirety.

B. For all Unit Price Work in accordance with Paragraph 13.03 of the General Conditions, an amount equal to the sum of the established unit price for each separately identified item of Unit Price Work times the actual quantity of that item:

Unit Price Work					
Item No.	**Description**	**Unit**	**Estimated Quantity**	**Unit Price**	**Extended Price**
See Exhibit No. 1 Contractor's Bid Schedule.					
Total of all Extended Prices for Unit Price Work (subject to final adjustment based on actual quantities)					$

The Bid Unit Prices set forth above are guaranteed prices. Although the Estimated Quantities are estimates and may increase or decrease based on determinations of Engineer, Contractor agrees and understands that the Bid Unit Prices shall remain the same irrespective of the quantities. Contractor understands that in agreeing to any Bid Unit Price it is agreeing to bear the risk associated with any material price increase of escalation. Owner agrees and understands that in agreeing to any Bid Unit Price it is agreeing to bear the risk associated with any material price decrease or reduction.

C. Deleted in its entirety.

D. For all Work, at the prices stated in Contractor's Bid Schedule, attached hereto as an exhibit.

ARTICLE 6—PAYMENT PROCEDURES

6.01 *Submittal and Processing of Payments*

A. Contractor shall submit Applications for Payment in accordance with Article 15 of the General Conditions. Applications for Payment will be processed by Engineer as provided in the General Conditions.

Copyright© 2018 National Society of Professional Engineers, American Council of Engineering Companies, and American Society of Civil Engineers. All rights reserved.

6.02 *Progress Payments; Retainage*

A. Owner shall make progress payments on the basis of Contractor's Applications for Payment on or about the **15th** day of each month during performance of the Work as provided in Paragraph 6.02.A.1 below, provided that such Applications for Payment have been submitted in a timely manner and otherwise meet the requirements of the Contract. All such payments will be measured by the Schedule of Values established as provided in the General Conditions (and in the case of Unit Price Work based on the number of units completed) or, in the event there is no Schedule of Values, as provided elsewhere in the Contract.

1. Prior to Substantial Completion, progress payments will be made in an amount equal to the percentage indicated below but, in each case, less the aggregate of payments previously made and less such amounts as Owner may withhold, including but not limited to liquidated damages, in accordance with the Contract.

a. **95%** percent of the value of the Work completed (with the balance being retainage).

1) Deleted in its entirety.

b. Deleted in its entirety.

B. Owner shall withhold Five percent (5%) of each progress payment as retainage.

6.03 *Final Payment*

A. Upon final completion and acceptance of the Work, Owner shall pay the remainder of the Contract Price in accordance with Paragraph 15.06 of the General Conditions.

6.04 *Consent of Surety*

A. Owner will not make final payment, or return or release retainage at Substantial Completion or any other time, unless Contractor submits written consent of the surety to such payment, return, or release.

6.05 *Interest* Deleted in its entirety.

A. Deleted in its entirety.

ARTICLE 7—CONTRACT DOCUMENTS

7.01 *Contents*

A. The Contract Documents consist of all of the following:

1. This Agreement (pages 1 to 12, inclusive).
2. Bonds:
   a. Combination Payment and Performance bond, together with power of attorney, (pages 1 to 4, inclusive).
3. General Conditions (pages 1 to 74, inclusive).
4. Deleted in its entirety.
5. Technical Specifications, on file with _____, _____ (pages __ to ___, inclusive).
6. Drawings, on file with _____, _____ (pages __ to __, inclusive).

Copyright© 2018 National Society of Professional Engineers, American Council of Engineering Companies, and American Society of Civil Engineers. All rights reserved.

7. Addendum No. __ (pages __ to __, inclusive).
8. Addendum No. __ (pages __ to __, inclusive).
9. Exhibits to this Agreement (enumerated as follows):
    a. Exhibit No. 1 Contractor's Bid Schedule (page __, inclusive).
    b. Exhibit No. 2 Contractor's Proposal (pages __ to __, inclusive).
    c. Exhibit No. 3 Composite Exhibit No. 3 City's _____ (pages __ to ___, not attached, on file with office of the City Clerk).
10. The following which may be delivered or issued on or after the Effective Date of the Contract and are not attached hereto:
    a. Notice to Proceed.
    b. Work Change Directives.
    c. Change Orders.
    d. Field Orders.
    e. Warranty Bond, if any.

B. The Contract Documents listed in Paragraph 7.01.A are attached to this Agreement (except as expressly noted otherwise above).

C. There are no Contract Documents other than those listed above in this Article 7.

D. The Contract Documents may only be amended, modified, or supplemented as provided in the Contract.

ARTICLE 8—REPRESENTATIONS, CERTIFICATIONS, AND STIPULATIONS

8.01 *Contractor's Representations*

A. In order to induce Owner to enter into this Contract, Contractor makes the following representations:

1. Contractor has examined and carefully studied the Contract Documents, including Addenda.
2. Contractor has visited the Site, conducted a thorough visual examination of the Site and adjacent areas, and become familiar with the general, local, and Site conditions that may affect cost, progress, and performance of the Work.
3. Contractor is familiar with all Laws and Regulations that may affect cost, progress, and performance of the Work.
4. Contractor has carefully studied the reports of explorations and tests of subsurface conditions at or adjacent to the Site and the drawings of physical conditions relating to existing surface or subsurface structures at the Site that have been identified in the Supplementary Conditions, with respect to the Technical Data in such reports and drawings.
5. Contractor has carefully studied the reports and drawings relating to Hazardous Environmental Conditions, if any, at or adjacent to the Site that have been identified in

DRAFT

Copyright© 2018 National Society of Professional Engineers, American Council of Engineering Companies, and American Society of Civil Engineers. All rights reserved.

the Supplementary Conditions, with respect to Technical Data in such reports and drawings.

6. Contractor has considered the information known to Contractor itself; information commonly known to contractors doing business in the locality of the Site; information and observations obtained from visits to the Site; the Contract Documents; and the Technical Data identified in the Supplementary Conditions or by definition, with respect to the effect of such information, observations, and Technical Data on (a) the cost, progress, and performance of the Work; (b) the means, methods, techniques, sequences, and procedures of construction to be employed by Contractor; and (c) Contractor's safety precautions and programs.

7. Based on the information and observations referred to in the preceding paragraph, Contractor agrees that no further examinations, investigations, explorations, tests, studies, or data are necessary for the performance of the Work at the Contract Price, within the Contract Times, and in accordance with the other terms and conditions of the Contract.

8. Contractor is aware of the general nature of work to be performed by Owner and others at the Site that relates to the Work as indicated in the Contract Documents.

9. Contractor has given Engineer written notice of all conflicts, errors, ambiguities, or discrepancies that Contractor has discovered in the Contract Documents, and of discrepancies between Site conditions and the Contract Documents, and the written resolution thereof by Engineer is acceptable to Contractor.

10. The Contract Documents are generally sufficient to indicate and convey understanding of all terms and conditions for performance and furnishing of the Work.

11. Contractor's entry into this Contract constitutes an incontrovertible representation by Contractor that without exception all prices in the Agreement are premised upon performing and furnishing the Work required by the Contract Documents.

8.02 *Contractor's Certifications*

A. Contractor certifies that it has not engaged in corrupt, fraudulent, collusive, or coercive practices in competing for or in executing the Contract. For the purposes of this Paragraph 8.02:

1. "corrupt practice" means the offering, giving, receiving, or soliciting of anything of value likely to influence the action of a public official in the bidding process or in the Contract execution;

2. "fraudulent practice" means an intentional misrepresentation of facts made (a) to influence the bidding process or the execution of the Contract to the detriment of Owner, (b) to establish Bid or Contract prices at artificial non-competitive levels, or (c) to deprive Owner of the benefits of free and open competition;

3. "collusive practice" means a scheme or arrangement between two or more Bidders, with or without the knowledge of Owner, a purpose of which is to establish Bid prices at artificial, non-competitive levels; and

Copyright© 2018 National Society of Professional Engineers, American Council of Engineering Companies, and American Society of Civil Engineers. All rights reserved.

4. "coercive practice" means harming or threatening to harm, directly or indirectly, persons or their property to influence their participation in the bidding process or affect the execution of the Contract.

8.03 *Standard General Conditions*

A. Owner stipulates that if the General Conditions that are made a part of this Contract are EJCDC® C-700, Standard General Conditions for the Construction Contract (2018), published by the Engineers Joint Contract Documents Committee, and if Owner is the party that has furnished said General Conditions, then Owner has plainly shown all modifications to the standard wording of such published document to the Contractor, through a process such as highlighting or "track changes" (redline/strikeout), or in the Supplementary Conditions.

B. Any reference to Supplementary Conditions throughout this document, the C-520 Agreement between Owner and Contractor for Construction Contract (2018), and the EJCDC® C-700, Standard General Conditions for the Construction Contract (2018), are hereby deleted in their entirety.

ARTICLE 9—MISCELLANEOUS

9.01 *Assignment of Contract*

A. No assignment by a party hereto of any rights under or interests in the Contract will be binding on another party hereto without the written consent of the party sought to be bound; and, specifically but without limitation, moneys that may become due and moneys that are due may not be assigned without such consent (except to the extent that the effect of this restriction may be limited by law), and unless specifically stated to the contrary in any written consent to an assignment, no assignment will release or discharge the assignor from any duty or responsibility under the Contract Documents.

9.02 *Successors and Assigns*

Owner and Contractor each binds itself, its partners, successors, assigns, and legal representatives to the other party hereto, its partners, successors, assigns, and legal representatives in respect to all covenants, agreements, and obligations contained in the Contract Documents.

9.03 *Severability*

Any provisions or part of the Contract Documents held to be void or unenforceable under any Law or Regulation shall be deemed stricken, and all remaining provisions and parts shall continue to be valid and binding upon Owner and Contractor, who agree that the Contract Documents shall be reformed to replace such stricken provision or part thereof with a valid and enforceable provision or part that comes as close as possible to expressing the intention of the stricken provision.

9.04 *No-Damage-for-Delay*

Contractor shall not be entitled to any damages (including, without limitation, expenses, costs, fees, extended field overhead and general conditions, equipment costs, home office overhead, lost productivity and inefficiency damages, additional payroll and labor costs, etc.) for any delay to its Work. Contractor's sole and exclusive remedy for a delay to its Work that is not caused by Contractor (or a person or entity performing a portion of Contractor's scope of Work) shall be an

Copyright© 2018 National Society of Professional Engineers, American Council of Engineering Companies, and American Society of Civil Engineers. All rights reserved.

extension of time to substantially complete and finally complete the Project; provided, however, that Owner granting Contractor an extension of time is not a condition precedent to this no-damage-for-delay provision. Contractor shall also not be entitled to any damages for disruption or interference to its Work or for having to accelerate or incur additional labor or payroll costs in order to make up or overcome a delay to its Work so that it can maintain the dates for Substantial Completion and Final Completion. Contractor agrees that in determining and agreeing to the Contract Price it is considered this no-damage-for-delay provision and understands that it is not entitled to any damages whatsoever for a delay to its Work.

9.05 *No intended Third-Party Beneficiaries*

There are no intended third-party beneficiaries to the Contract.

9.06 *Public Record Compliance*

Contractor shall comply with public records laws as set forth in Section 119, Florida Statutes, and shall specifically: (a) keep and maintain public records that ordinarily and necessarily would be required by the City in order to perform the service; (b) provide the public with access to public records on the same terms and conditions that the City would provide the records at a cost that does not exceed the cost provided in Section 119, Florida Statutes, or as otherwise provided by law; (c) ensure that public records that are exempt or confidential and exempt from public records disclosure requirements are not disclosed except as authorized by law; and (d) meet all requirements for retaining public records and transfer to the City, at no cost, all public records in possession of the Contractor upon termination of the Contract and destroy any duplicate public records that are exempt or confidential and exempt from public records disclosure requirements. All records stored electronically must be provided to the City in a format that is compatible with the information technology systems of the City.

9.07 *Records*

The design, permits and all other records prepared by the Contractor, assembled for the City, subcontracted for the City, and any other records related to the scope of work in the possession of the Contractor shall be retained by the Contractor for the requisite time set forth in Florida Administration Code Rule 1 b-24.

http://dos.myflorida.com/library-archives/records-management/. Contractor may dispose of the records in accordance with Florida law, upon receipt of a signed written release signed by the City Attorney. Contractor agrees to indemnify the City for failure to comply with the requirements of this paragraph including costs of litigation and legal fees incurred through all appeals. City reserves the right to select and approve the defense attorney.

9.08 *Force Majure*

Neither party shall be liable for any delay in performance or failure to perform any obligation hereunder if, and to the extent that, such failure or delay is caused by an event of Force Majeure. Force Majeure shall mean any act, event or condition that is beyond the party's reasonable control, that materially and adversely affects the party's ability to perform its obligations hereunder, and that is not the result of the party's willful neglect, error, omission or failure to exercise reasonable due diligence.

DRAFT

Copyright© 2018 National Society of Professional Engineers, American Council of Engineering Companies, and American Society of Civil Engineers. All rights reserved.

9.09 *Contract construction*

This Contract may be executed in one or more counterparts, each of which shall be deemed an original but all of which together constitute one and the same instrument. The delivery by facsimile or e-mail of an executed copy of this Contract shall be deemed valid as if an original signature was delivered. No contract shall be formed between the Contractor and the City until both Parties have signed this Contract.

9.10 *Financial Disclosures*

During the term of this Contract, Contractor covenants and agrees that it will keep adequate books and records of accounts in accordance with Generally Accepted Accounting Principals (GAAP). Contractor further covenants and agrees that in the event the Contractor becomes insolvent and/or fails to pay its current obligations when they become due, Contractor shall so advise Owner of such situation and, upon request from the Owner, Contractor shall provide to Owner financial statements of Contractor, including current income and expense statements of Contractor, consolidated balance sheets signed by a financial officer of Contractor, and audited reports provided by Contractor to Contractor's Surety, audited financial statements certified by a Certified Public Accountant concerning the financial affairs of the Contractor and all affiliates of Contractor, and such other financial information requested by Owner. All such financial information shall comply with GAAP.

In the event that Contractor becomes insolvent and/or fails to pay its obligations when they become due, Contractor hereby authorized its sureties, lenders, financial institutions and other third parties to release Owner financial information requested by Owner, including, but not limited to, the financial information described in the preceding paragraph.

9.11 *Waiver of Jury Trial*

All parties hereby waive any and all right to any trial by jury in any action or proceeding arising directly or indirectly hereunder.

9.12 *Insurance Requirements*

If the recipient elects to self-perform the Project, and such self-performance is approved by the Department in accordance with the terms of this Agreement, the Recipient may self-insure and proof of self-insurance shall be provided to the Department. If the Recipient elects to hire a contractor or consultant to perform the Project, then the Recipient shall, or cause its contractor or consultant to carry Commercial General Liability insurance providing continuous coverage for all work or operations performed under the Agreement. Such insurance shall be no more restrictive than that provided by the latest occurrence from edition of the standard Commercial General Liability Form (ISO Form CG 00 01) as filed for use in the State of Florida. Recipient shall, or cause its contractor to cause the Department to be made an Additional Insured as to such insurance. Such coverage shall be on an "Occurrence" basis and shall include Products/Completed Operations coverage. The coverage afforded to the Department as an Additional Insured shall be primary as to any other available insurance and shall not be more

DRAFT

Copyright© 2018 National Society of Professional Engineers, American Council of Engineering Companies, and American Society of Civil Engineers. All rights reserved.

restrictive than the coverage afforded to the Named Insured. The limits of coverage shall not be less than $1,000,000 for each occurrence and not less than $5,000,000 annual general aggregate, inclusive of amounts provided by an umbrella or excess policy. The limits of coverage described herein shall apply fully to the work or operations performed under the Agreement, and may not be shared with or dismissed by claims unrelated to the Agreement. The policy/ies and coverage described herein may be subject to a deductible and such deductibles shall be paid by the Named Insured. No policy/ies or coverage described herein may contain or be subject to a Retention or a Self-Insured Retention unless the Recipient is a state agency or subdivision of the State of Florida that elects to self-perform the Project. Prior to the execution of the Agreement, and at all renewal periods which occur prior to final acceptance of the work, the Department shall be provided with an ACORD Certificate of Liability Insurance reflecting the coverage described herein. The Department shall be notified in writing within ten days of any cancellation, lapse, renewal, or proposed change to any policy or coverage described herein. The Department's approval or failure to disapprove any policy/ies, coverage, or ACORD Certificates shall not relieve or excuse any obligation to procure and maintain the insurance required herein, nor serve as a waiver of any rights or defenses the Department may have.

9.13 *E-Verify*

Contractor shall utilize the U.S. Department of Homeland Security's E-Verify system to verify the employment eligibility of all new employees hired by the Contractor during the term of this Contract and shall expressly require any sub-contractors performing services pursuant to this Contract to likewise utilize the U.S. Department of Homeland Security's E-Verify system to verify the employment eligibility of all new employees hired by the sub-contractor during the term of this Contract.

9.14 *Indemnity*

To the extent provided by law, Contractor shall indemnify, defend, and hold harmless the City and the State of Florida, Department of Transportation, including the Department's officers, agents, and employees, against any actions, claims, or damages arising out of, relating to, or resulting from negligent or wrongful act(s) of Contractor, or any of its officers, agents, or employees, acting within the scope of their office or employment, in connection with the rights granted to or exercised by Contractor.

The foregoing indemnification shall not constitute a waiver of the Department's or Coty's sovereign immunity beyond the limits set forth in Florida Statutes, Section 768.28. Nor shall the same be construed to constitute agreement by Contractor to indemnify City for the negligent acts or omissions of City, its officers, agents, or employees, or third parties. Nor shall the same be construed to constitute agreement by Contractor to indemnify the Department for the negligent acts or omissions of the Department, its officers, agents, or employees, or third parties. This indemnification shall survive the termination of this Agreement.

9.15 *Cooperation with Inspector General*

Contractor agrees to comply with Section 20.055(5), Florida Statutes, and to incorporate in all subcontracts the obligation to comply with Section 20.055(5), Florida Statutes.

DRAFT

Copyright© 2018 National Society of Professional Engineers, American Council of Engineering Companies, and American Society of Civil Engineers. All rights reserved.

IN WITNESS WHEREOF, Owner and Contractor have signed this Agreement.

This Agreement will be effective on _____ (which is the Effective Date of the Contract).

Contractor:

_____
(typed or printed name of organization)

By: _____
(individual's signature)

Date: _____
(date signed)

Name: _____
(typed or printed)

Title: _____
(typed or printed)

(If company is a corporation, a partnership, or a joint venture, attach evidence of authority to sign.)

Attest: _____
(individual's signature)

Title: _____
(typed or printed)

Address for giving notices:

_____

_____

_____

Phone: _____

Email: _____

License No.: _____

State: _____

DRAFT

Copyright© 2018 National Society of Professional Engineers, American Council of Engineering Companies, and American Society of Civil Engineers. All rights reserved.

Owner:

City of Port Orange

(typed or printed name of organization)

By: _____

(individual's signature)

Date: _____

(date signed)

Name: Scott Stiltner

(typed or printed)

Title: Mayor

(typed or printed)

Attest: Robin L. Fenwick, MMC

(individual's signature)

Title: City Clerk

(typed or printed)

Address for giving notices:

1000 City Center Circle

Port Orange, Florida 32129

(386) 506-5500

DRAFT

Copyright© 2018 National Society of Professional Engineers, American Council of Engineering Companies, and American Society of Civil Engineers. All rights reserved.

This document has important legal consequences; consultation with an attorney is encouraged with respect to its use or modification. This document should be adapted to the particular circumstances of the contemplated Project and the controlling Laws and Regulations.

STANDARD GENERAL CONDITIONS OF THE CONSTRUCTION CONTRACT

Prepared By

EJCDC®
ENGINEERS JOINT CONTRACT DOCUMENTS COMMITTEE

ACEC
AMERICAN COUNCIL OF ENGINEERING COMPANIES

ASCE
AMERICAN SOCIETY OF CIVIL ENGINEERS

NSPE®
NATIONAL SOCIETY OF PROFESSIONAL ENGINEERS

Endorsed By

CSI®
Building Knowledge
Improving Project Delivery

NUCA
We Dig America

EJCDC® C-700, Standard General Conditions of the Construction Contract.
Copyright© 2018 National Society of Professional Engineers, American Council of Engineering Companies, and American Society of Civil Engineers. All rights reserved.

4885-5313-8281, v. 424

Copyright© 2018

National Society of Professional Engineers

1420 King Street, Alexandria, VA 22314-2794

(703) 684-2882

www.nspe.org

American Council of Engineering Companies

1015 15th Street N.W., Washington, DC 20005

(202) 347-7474

www.acec.org

American Society of Civil Engineers

1801 Alexander Bell Drive, Reston, VA 20191-4400

(800) 548-2723

www.asce.org

The copyright for this EJCDC document is owned jointly by the three sponsoring organizations listed above. The National Society of Professional Engineers is the Copyright Administrator for the EJCDC documents; please direct all inquiries regarding EJCDC copyrights to NSPE.

NOTE: EJCDC publications may be purchased at www.ejcdc.org, or from any of the sponsoring organizations above.

STANDARD GENERAL CONDITIONS OF THE CONSTRUCTION CONTRACT

TABLE OF CONTENTS

Page

Article 1—Definitions and Terminology 1
1.01 Defined Terms 1
1.02 Terminology 6
Article 2—Preliminary Matters 7
2.01 Delivery of Performance and Payment Bonds; Evidence of Insurance 7
2.02 Copies of Documents 8
2.03 Before Starting Construction 8
2.04 Preconstruction Conference; Designation of Authorized Representatives 8
2.05 Acceptance of Schedules 8
2.06 Electronic Transmittals 9
Article 3—Contract Documents: Intent, Requirements, Reuse 10
3.01 Intent 10
3.02 Reference Standards 10
3.03 Reporting and Resolving Discrepancies 11
3.04 Requirements of the Contract Documents 12
3.05 Reuse of Documents 12
Article 4—Commencement and Progress of the Work 13
4.01 Commencement of Contract Times; Notice to Proceed 13
4.02 Starting the Work 13
4.03 Reference Points 13
4.04 Progress Schedule 13
4.05 Delays in Contractor's Progress 13
Article 5—Site; Subsurface and Physical Conditions; Hazardous Environmental Conditions 15
5.01 Availability of Lands 15
5.02 Use of Site and Other Areas 15
5.03 Subsurface and Physical Conditions 16
5.04 Differing Subsurface or Physical Conditions 17

DRAFT

Copyright© 2018 National Society of Professional Engineers, American Council of Engineering Companies, and American Society of Civil Engineers. All rights reserved.

5.05 Underground Facilities 19
5.06 Hazardous Environmental Conditions at Site 21
Article 6—Bonds and Insurance 23
6.01 Performance, Payment, and Other Bonds 23
6.02 Insurance—General Provisions 23
6.03 Contractor's Insurance 25
6.04 Builder's Risk and Other Property Insurance 26
6.05 Property Losses; Subrogation 27
6.06 Receipt and Application of Property Insurance Proceeds 28
Article 7—Contractor's Responsibilities 28
7.01 Contractor's Means and Methods of Construction 28
7.02 Supervision and Superintendence 29
7.03 Labor; Working Hours 29
7.04 Services, Materials, and Equipment 30
7.05 "Or Equals" 30
7.06 Substitutes 31
7.07 Concerning Subcontractors and Suppliers 33
7.08 Patent Fees and Royalties 34
7.09 Permits 34
7.10 Taxes 34
7.11 Laws and Regulations 34
7.12 Record Documents 35
7.13 Safety and Protection 35
7.14 Hazard Communication Programs 36
7.15 Emergencies 37
7.16 Submittals 37
7.17 Contractor's General Warranty and Guarantee 40
7.18 Indemnification 41
7.19 Delegation of Professional Design Services 42
Article 8—Other Work at the Site 42
8.01 Other Work 42
8.02 Coordination 43
8.03 Legal Relationships 44

DRAFT

Copyright© 2018 National Society of Professional Engineers, American Council of Engineering Companies, and American Society of Civil Engineers. All rights reserved.

Article 9—Owner's Responsibilities 45
9.01 Communications to Contractor 45
9.02 Replacement of Engineer 45
9.03 Furnish Data 45
9.04 Pay When Due 45
9.05 Lands and Easements; Reports, Tests, and Drawings 45
9.06 Insurance 45
9.07 Change Orders 45
9.08 Inspections, Tests, and Approvals 45
9.09 Limitations on Owner's Responsibilities 45
9.10 Undisclosed Hazardous Environmental Condition 46
9.11 Evidence of Financial Arrangements 46
9.12 Safety Programs 46
Article 10—Engineer's Status During Construction 46
10.01 Owner's Representative 46
10.02 Visits to Site 46
10.03 Resident Project Representative 46
10.04 Engineer's Authority 47
10.05 Determinations for Unit Price Work 47
10.06 Decisions on Requirements of Contract Documents and Acceptability of Work 47
10.07 Limitations on Engineer's Authority and Responsibilities 47
10.08 Compliance with Safety Program 48
Article 11—Changes to the Contract 48
11.01 Amending and Supplementing the Contract 48
11.02 Change Orders 48
11.03 Work Change Directives 49
11.04 Field Orders 49
11.05 Owner-Authorized Changes in the Work 49
11.06 Unauthorized Changes in the Work 50
11.07 Change of Contract Price 50
11.08 Change of Contract Times 51
11.09 Change Proposals 51
11.10 Notification to Surety 53

DRAFT

Copyright© 2018 National Society of Professional Engineers, American Council of Engineering Companies, and American Society of Civil Engineers. All rights reserved.

Article 12—Claims 53
12.01 Claims 53
Article 13—Cost of the Work; Allowances; Unit Price Work 53
13.01 Cost of the Work 53
13.02 Allowances 53
13.03 Unit Price Work 54
Article 14—Tests and Inspections; Correction, Removal, or Acceptance of Defective Work 54
14.01 Access to Work 54
14.02 Tests, Inspections, and Approvals 55
14.03 Defective Work 55
14.04 Acceptance of Defective Work 56
14.05 Uncovering Work 57
14.06 Owner May Stop the Work 57
14.07 Owner May Correct Defective Work 57
Article 15—Payments to Contractor; Set-Offs; Completion; Correction Period 58
15.01 Progress Payments 58
15.02 Contractor's Warranty of Title 61
15.03 Substantial Completion 61
15.04 Partial Use or Occupancy 62
15.05 Final Inspection 63
15.06 Final Payment 63
15.07 Waiver of Claims 65
15.08 Correction Period 65
Article 16—Suspension of Work and Termination 66
16.01 Owner May Suspend Work 66
16.02 Owner May Terminate for Cause 66
16.03 Owner May Terminate for Convenience 67
16.04 Contractor May Stop Work or Terminate 68
Article 17—Final Resolution of Disputes 69
17.01 Methods and Procedures 69
Article 18—Miscellaneous 70
18.01 Giving Notice 70
18.02 Computation of Times 70

Copyright© 2018 National Society of Professional Engineers, American Council of Engineering Companies, and American Society of Civil Engineers. All rights reserved.

18.03 Cumulative Remedies 70
18.04 Limitation of Damages 70
18.05 No Waiver 70
18.06 Survival of Obligations 70
18.07 Controlling Law 71
18.08 Assignment of Contract 71
18.09 Successors and Assigns 71
18.10 Headings 71

DRAFT

Copyright© 2018 National Society of Professional Engineers, American Council of Engineering Companies, and American Society of Civil Engineers. All rights reserved.

STANDARD GENERAL CONDITIONS OF THE CONSTRUCTION CONTRACT

ARTICLE 1—DEFINITIONS AND TERMINOLOGY

1.01 *Defined Terms*

A. Wherever used in the Bidding Requirements or Contract Documents, a term printed with initial capital letters, including the term's singular and plural forms, will have the meaning indicated in the definitions below. In addition to terms specifically defined, terms with initial capital letters in the Contract Documents include references to identified articles and paragraphs, and the titles of other documents or forms.

1. *Addenda*—Written or graphic instruments issued prior to the opening of Bids which clarify, correct, or change the Bidding Requirements or the proposed Contract Documents.

2. *Agreement*—The written instrument, executed by Owner and Contractor, that sets forth the Contract Price and Contract Times, identifies the parties and the Engineer, and designates the specific items that are Contract Documents.

3. *Application for Payment*—The document prepared by Contractor, in a form acceptable to Engineer, to request progress or final payments, and which is to be accompanied by such supporting documentation as is required by the Contract Documents.

4. *Bid*—The offer of a Bidder submitted on the prescribed form setting forth the prices for the Work to be performed.

5. *Bidder*—An individual or entity that submits a Bid to Owner.

6. *Bidding Documents*—The Bidding Requirements, the proposed Contract Documents, and all Addenda.

7. *Bidding Requirements*—The Advertisement or invitation to bid, Instructions to Bidders, Bid Bond or other Bid security, if any, the Bid Form, and the Bid with any attachments.

8. *Change Order*—A document which is signed by Contractor and Owner and authorizes an addition, deletion, or revision in the Work or an adjustment in the Contract Price or the Contract Times, or other revision to the Contract, issued on or after the Effective Date of the Contract.

9. *Change Proposal*—A written request by Contractor, duly submitted in compliance with the procedural requirements set forth herein, seeking an adjustment in Contract Price or Contract Times; contesting an initial decision by Engineer concerning the requirements of the Contract Documents or the acceptability of Work under the Contract Documents; challenging a set-off against payments due; or seeking other relief with respect to the terms of the Contract.

Copyright© 2018 National Society of Professional Engineers, American Council of Engineering Companies, and American Society of Civil Engineers. All rights reserved.

10. *Claim*

    a. A demand or assertion by Owner directly to Contractor, duly submitted in compliance with the procedural requirements set forth herein, seeking an adjustment of Contract Price or Contract Times; contesting an initial decision by Engineer concerning the requirements of the Contract Documents or the acceptability of Work under the Contract Documents; contesting Engineer's decision regarding a Change Proposal; seeking resolution of a contractual issue that Engineer has declined to address; or seeking other relief with respect to the terms of the Contract.

    b. A demand or assertion by Contractor directly to Owner, duly submitted in compliance with the procedural requirements set forth herein, contesting Engineer's decision regarding a Change Proposal, or seeking resolution of a contractual issue that Engineer has declined to address.

    c. A demand or assertion by Owner or Contractor, duly submitted in compliance with the procedural requirements set forth herein, made pursuant to Paragraph 12.01.A.4, concerning disputes arising after Engineer has issued a recommendation of final payment.

    d. A demand for money or services by a third party is not a Claim.

11. *Constituent of Concern*—Asbestos, petroleum, radioactive materials, polychlorinated biphenyls (PCBs), lead-based paint (as defined by the HUD/EPA standard), hazardous waste, and any substance, product, waste, or other material of any nature whatsoever that is or becomes listed, regulated, or addressed pursuant to Laws and Regulations regulating, relating to, or imposing liability or standards of conduct concerning, any hazardous, toxic, or dangerous waste, substance, or material.

12. *Contract*—The entire and integrated written contract between Owner and Contractor concerning the Work.

13. *Contract Documents*—Those items so designated in the Agreement, and which together comprise the Contract.

14. *Contract Price*—The money that Owner has agreed to pay Contractor for completion of the Work in accordance with the Contract Documents.

15. *Contract Times*—The number of days or the dates by which Contractor shall: (a) achieve Milestones, if any; (b) achieve Substantial Completion; and (c) complete the Work.

16. *Contractor*—The individual or entity with which Owner has contracted for performance of the Work.

17. *Cost of the Work*—See Paragraph 13.01 for definition.

18. *Drawings*—The part of the Contract that graphically shows the scope, extent, and character of the Work to be performed by Contractor.

19. *Effective Date of the Contract*—The date, indicated in the Agreement, on which the Contract becomes effective.

Copyright© 2018 National Society of Professional Engineers, American Council of Engineering Companies, and American Society of Civil Engineers. All rights reserved.

20. *Electronic Document*—Any Project-related correspondence, attachments to correspondence, data, documents, drawings, information, or graphics, including but not limited to Shop Drawings and other Submittals, that are in an electronic or digital format.

21. *Electronic Means*—Electronic mail (email), upload/download from a secure Project website, or other communications methods that allow: (a) the transmission or communication of Electronic Documents; (b) the documentation of transmissions, including sending and receipt; (c) printing of the transmitted Electronic Document by the recipient; (d) the storage and archiving of the Electronic Document by sender and recipient; and (e) the use by recipient of the Electronic Document for purposes permitted by this Contract. Electronic Means does not include the use of text messaging, or of Facebook, Twitter, Instagram, or similar social media services for transmission of Electronic Documents.

22. *Engineer*—The individual or entity named as such in the Agreement.

23. *Field Order*—A written order issued by Engineer which requires minor changes in the Work but does not change the Contract Price or the Contract Times.

24. *Hazardous Environmental Condition*—The presence at the Site of Constituents of Concern in such quantities or circumstances that may present a danger to persons or property exposed thereto.

    a. The presence at the Site of materials that are necessary for the execution of the Work, or that are to be incorporated into the Work, and that are controlled and contained pursuant to industry practices, Laws and Regulations, and the requirements of the Contract, is not a Hazardous Environmental Condition.

    b. The presence of Constituents of Concern that are to be removed or remediated as part of the Work is not a Hazardous Environmental Condition.

    c. The presence of Constituents of Concern as part of the routine, anticipated, and obvious working conditions at the Site, is not a Hazardous Environmental Condition.

25. *Laws and Regulations; Laws or Regulations*—Any and all applicable laws, statutes, rules, regulations, ordinances, codes, and binding decrees, resolutions, and orders of any and all governmental bodies, agencies, authorities, and courts having jurisdiction.

26. *Liens*—Charges, security interests, or encumbrances upon Contract-related funds, real property, or personal property.

27. *Milestone*—A principal event in the performance of the Work that the Contract requires Contractor to achieve by an intermediate completion date, or by a time prior to Substantial Completion of all the Work.

28. *Notice of Award*—The written notice by Owner to a Bidder of Owner's acceptance of the Bid.

29. *Notice to Proceed*—A written notice by Owner to Contractor fixing the date on which the Contract Times will commence to run and on which Contractor shall start to perform the Work.

Copyright© 2018 National Society of Professional Engineers, American Council of Engineering Companies, and American Society of Civil Engineers. All rights reserved.

30. *Owner*—The individual or entity with which Contractor has contracted regarding the Work, and which has agreed to pay Contractor for the performance of the Work, pursuant to the terms of the Contract.

31. *Progress Schedule*—A schedule, prepared and maintained by Contractor, describing the sequence and duration of the activities comprising Contractor's plan to accomplish the Work within the Contract Times.

32. *Project*—The total undertaking to be accomplished for Owner by engineers, contractors, and others, including planning, study, design, construction, testing, commissioning, and start-up, and of which the Work to be performed under the Contract Documents is a part.

33. *Project Manual*—The bound documentary information prepared for bidding and constructing the Work. A listing of the contents of the Project Manual, which may be bound in one or more volumes, is contained in the table(s) of contents.

34. *Punch List* - the detailed list of incomplete, unsatisfactory or unacceptable, or defective items that Contractor is required to complete prior to final payment that is generated in accordance with Paragraph 14.06 of the General Conditions."

35. *Resident Project Representative*—The authorized representative of Engineer assigned to assist Engineer at the Site. As used herein, the term Resident Project Representative (RPR) includes any assistants or field staff of Resident Project Representative.

36. *Samples*—Physical examples of materials, equipment, or workmanship that are representative of some portion of the Work and that establish the standards by which such portion of the Work will be judged.

37. *Schedule of Submittals*—A schedule, prepared and maintained by Contractor, of required submittals and the time requirements for Engineer's review of the submittals.

38. *Schedule of Values*—A schedule, prepared and maintained by Contractor, allocating portions of the Contract Price to various portions of the Work and used as the basis for reviewing Contractor's Applications for Payment.

39. *Shop Drawings*—All drawings, diagrams, illustrations, schedules, and other data or information that are specifically prepared or assembled by or for Contractor and submitted by Contractor to illustrate some portion of the Work. Shop Drawings, whether approved or not, are not Drawings and are not Contract Documents.

40. *Site*—Lands or areas indicated in the Contract Documents as being furnished by Owner upon which the Work is to be performed, including rights-of-way and easements, and such other lands or areas furnished by Owner which are designated for the use of Contractor.

41. *Specifications*—The part of the Contract that consists of written requirements for materials, equipment, systems, standards, and workmanship as applied to the Work, and certain administrative requirements and procedural matters applicable to the Work.

42. *Subcontractor*—An individual or entity having a direct contract with Contractor or with any other Subcontractor for the performance of a part of the Work.

Copyright© 2018 National Society of Professional Engineers, American Council of Engineering Companies, and American Society of Civil Engineers. All rights reserved.

43. *Submittal*—A written or graphic document, prepared by or for Contractor, which the Contract Documents require Contractor to submit to Engineer, or that is indicated as a Submittal in the Schedule of Submittals accepted by Engineer. Submittals may include Shop Drawings and Samples; schedules; product data; Owner-delegated designs; sustainable design information; information on special procedures; testing plans; results of tests and evaluations, source quality-control testing and inspections, and field or Site quality-control testing and inspections; warranties and certifications; Suppliers' instructions and reports; records of delivery of spare parts and tools; operations and maintenance data; Project photographic documentation; record documents; and other such documents required by the Contract Documents. Submittals, whether or not approved or accepted by Engineer, are not Contract Documents. Change Proposals, Change Orders, Claims, notices, Applications for Payment, and requests for interpretation or clarification are not Submittals.

44. *Substantial Completion*—The time and date at which the Work (or a specified part thereof) has progressed to the point where, in the opinion of Engineer, the Work (or a specified part thereof) is sufficiently complete, in accordance with the Contract Documents, so that the Work (or a specified part thereof) can be utilized for the purposes for which it is intended. The terms "substantially complete" and "substantially completed" as applied to all or part of the Work refer to Substantial Completion of such Work.

45. *Successful Bidder*—The Bidder to which the Owner makes an award of contract.

46. *Supplementary Conditions*—The part of the Contract that amends or supplements these General Conditions.

47. *Supplier*—A manufacturer, fabricator, supplier, distributor, or vendor having a direct contract with Contractor or with any Subcontractor to furnish materials or equipment to be incorporated in the Work by Contractor or a Subcontractor.

48. *Technical Data*

    a. Those items expressly identified as Technical Data in the Supplementary Conditions, with respect to either (1) existing subsurface conditions at or adjacent to the Site, or existing physical conditions at or adjacent to the Site including existing surface or subsurface structures (except Underground Facilities) or (2) Hazardous Environmental Conditions at the Site.

    b. If no such express identifications of Technical Data have been made with respect to conditions at the Site, then Technical Data is defined, with respect to conditions at the Site under Paragraphs 5.03, 5.04, and 5.06, as the data contained in boring logs, recorded measurements of subsurface water levels, assessments of the condition of subsurface facilities, laboratory test results, and other factual, objective information regarding conditions at the Site that are set forth in any geotechnical, environmental, or other Site or facilities conditions report prepared for the Project and made available to Contractor.

Copyright© 2018 National Society of Professional Engineers, American Council of Engineering Companies, and American Society of Civil Engineers. All rights reserved.

c. Information and data regarding the presence or location of Underground Facilities are not intended to be categorized, identified, or defined as Technical Data, and instead Underground Facilities are shown or indicated on the Drawings.

49. *Underground Facilities*—All active or not-in-service underground lines, pipelines, conduits, ducts, encasements, cables, wires, manholes, vaults, tanks, tunnels, or other such facilities or systems at the Site, including but not limited to those facilities or systems that produce, transmit, distribute, or convey telephone or other communications, cable television, fiber optic transmissions, power, electricity, light, heat, gases, oil, crude oil products, liquid petroleum products, water, steam, waste, wastewater, storm water, other liquids or chemicals, or traffic or other control systems. An abandoned facility or system is not an Underground Facility.

50. *Unit Price Work*—Work to be paid for on the basis of unit prices.

51. *Work*—The entire construction or the various separately identifiable parts thereof required to be provided under the Contract Documents. Work includes and is the result of performing or providing all labor, services, and documentation necessary to produce such construction; furnishing, installing, and incorporating all materials and equipment into such construction; and may include related services such as testing, start-up, and commissioning, all as required by the Contract Documents.

52. Emergency *Work Change Directive*—A written directive to Contractor issued on or after the Effective Date of the Contract, signed by Owner and recommended by Engineer, ordering an addition, deletion, or revision in the Work due to an emergency that prevents the parties from using the Change Order process.

1.02 *Terminology*

A. The words and terms discussed in Paragraphs 1.02.B, C, D, and E are not defined terms that require initial capital letters, but, when used in the Bidding Requirements or Contract Documents, have the indicated meaning.

B. *Intent of Certain Terms or Adjectives*: The Contract Documents include the terms "as allowed," "as approved," "as ordered," "as directed" or terms of like effect or import to authorize an exercise of professional judgment by Engineer. In addition, the adjectives "reasonable," "suitable," "acceptable," "proper," "satisfactory," or adjectives of like effect or import are used to describe an action or determination of Engineer as to the Work. It is intended that such exercise of professional judgment, action, or determination will be solely to evaluate, in general, the Work for compliance with the information in the Contract Documents and with the design concept of the Project as a functioning whole as shown or indicated in the Contract Documents (unless there is a specific statement indicating otherwise). The use of any such term or adjective is not intended to and shall not be effective to assign to Engineer any duty or authority to supervise or direct the performance of the Work, or any duty or authority to undertake responsibility contrary to the provisions of Article 10 or any other provision of the Contract Documents.

C. *Day*: The word "day" means a calendar day of 24 hours measured from midnight to the next midnight, including weekends and legal holidays unless otherwise specifically defined.

Copyright© 2018 National Society of Professional Engineers, American Council of Engineering Companies, and American Society of Civil Engineers. All rights reserved.

D. *Defective*: The word "defective," when modifying the word "Work," refers to Work that is unsatisfactory, faulty, or deficient in that it:

1. does not conform to the Contract Documents;

2. does not meet the requirements of any applicable inspection, reference standard, test, or approval referred to in the Contract Documents; or

3. has been damaged prior to Engineer's recommendation of final payment (unless responsibility for the protection thereof has been assumed by Owner at Substantial Completion in accordance with Paragraph 15.03 or Paragraph 15.04).

E. *Furnish, Install, Perform, Provide*

1. The word "furnish," when used in connection with services, materials, or equipment, means to supply and deliver said services, materials, or equipment to the Site (or some other specified location) ready for use or installation and in usable or operable condition.

2. The word "install," when used in connection with services, materials, or equipment, means to put into use or place in final position said services, materials, or equipment complete and ready for intended use.

3. The words "perform" or "provide," when used in connection with services, materials, or equipment, means to furnish and install said services, materials, or equipment complete and ready for intended use.

4. If the Contract Documents establish an obligation of Contractor with respect to specific services, materials, or equipment, but do not expressly use any of the four words "furnish," "install," "perform," or "provide," then Contractor shall furnish and install said services, materials, or equipment complete and ready for intended use.

F. *Contract Price or Contract Times*: References to a change in "Contract Price or Contract Times" or "Contract Times or Contract Price" or similar, indicate that such change applies to (1) Contract Price, (2) Contract Times, or (3) both Contract Price and Contract Times, as warranted, even if the term "or both" is not expressed.

G. Unless stated otherwise in the Contract Documents, words or phrases that have a well-known technical or construction industry or trade meaning are used in the Contract Documents in accordance with such recognized meaning.

ARTICLE 2—PRELIMINARY MATTERS

2.01 *Delivery of Performance and Payment Bonds; Evidence of Insurance*

A. *Performance and Payment Bonds*: When Contractor delivers the signed counterparts of the Agreement to Owner, Contractor shall also deliver to Owner the performance bond and payment bond (if the Contract requires Contractor to furnish such bonds).

B. *Evidence of Contractor's Insurance*: When Contractor delivers the signed counterparts of the Agreement to Owner, Contractor shall also deliver to Owner, with copies to each additional insured (as identified in the Contract), the certificates, endorsements, and other evidence of insurance required to be provided by Contractor in accordance with Article 6, except to the

Copyright© 2018 National Society of Professional Engineers, American Council of Engineering Companies, and American Society of Civil Engineers. All rights reserved.

extent the Supplementary Conditions expressly establish other dates for delivery of specific insurance policies.

C. Deleted in its entirety.

2.02 *Copies of Documents*

A. Owner shall furnish to Contractor four printed copies of the Contract (including one fully signed counterpart of the Agreement), and one copy in electronic portable document format (PDF). Additional printed copies will be furnished upon request at the cost of reproduction.

B. Owner shall maintain and safeguard at least one original printed record version of the Contract, including Drawings and Specifications signed and sealed by Engineer and other design professionals. Owner shall make such original printed record version of the Contract available to Contractor for review. Owner may delegate the responsibilities under this provision to Engineer.

2.03 *Before Starting Construction*

A. *Preliminary Schedules*: Within 10 days after Contract award or at the preconstruction conference (or as otherwise required by the Contract Documents), or whichever is later, Contractor shall submit to Engineer for timely review.

1. a preliminary Progress Schedule indicating the times (numbers of days or dates) for starting and completing the various stages of the Work, including any Milestones specified in the Contract, and identifying the Substantial Completion date;

2. a preliminary Schedule of Submittals; and

3. a preliminary Schedule of Values for all of the Work which includes quantities and prices of items which when added together equal the Contract Price and subdivides the Work into component parts in sufficient detail to serve as the basis for progress payments during performance of the Work. Such prices will include an appropriate amount of overhead and profit applicable to each item of Work.

2.04 *Preconstruction Conference; Designation of Authorized Representatives*

A. Before any Work at the Site is started, a conference attended by Owner, Contractor, Engineer, and others as appropriate will be held to establish a working understanding among the parties as to the Work, and to discuss the schedules referred to in Paragraph 2.03.A, procedures for handling Shop Drawings, Samples, and other Submittals, processing Applications for Payment, electronic or digital transmittals, and maintaining required records.

B. At this conference Owner and Contractor each shall designate, in writing, a specific individual to act as its authorized representative with respect to the services and responsibilities under the Contract. Such individuals shall have the authority to transmit and receive information, render decisions relative to the Contract, and otherwise act on behalf of each respective party.

2.05 *Acceptance of Schedules*

A. The Engineer will review and respond to the Contractor within 15 calendar days of receipt of the Progress Schedule. The Engineer will return inadequate Progress Schedules to the

Copyright© 2018 National Society of Professional Engineers, American Council of Engineering Companies, and American Society of Civil Engineers. All rights reserved.

Contractor for corrections. Resubmit a corrected schedule within 15 calendar days from date of the Engineer's return transmittal.

1. The Progress Schedule will be acceptable to Engineer and Owner if it provides an orderly progression of the Work to completion within the Contract Times and identifies Contractor's critical path sequence of scheduled activities with the earliest start dates for scheduled activities, the earliest finish date for scheduled activities, the latest start date for scheduled activities and latest finish date for scheduled activities. All float in the Progress Schedule shall belong to Owner in order to offset a delay attributable to Owner or its agents. Such acceptance will not impose on Engineer or Owner responsibility for the Progress Schedule, for sequencing, scheduling, or progress of the Work, nor interfere with or relieve Contractor from Contractor's full responsibility therefor.
2. Contractor's Schedule of Submittals will be acceptable to Engineer and Owner if it provides a workable arrangement for reviewing and processing the required submittals.
3. Contractor's Schedule of Values will be acceptable to Engineer and Owner as to form and substance if it provides a reasonable allocation of the Contract Price to the component parts of the Work.
4. If a schedule is not acceptable, Contractor will have an additional 10 days to revise and resubmit the schedule.
5. If Contractor submits a schedule indicating an intention to achieve completion of the Work prior to contractually required dates, including milestones, no liability of the Owner to the Contractor for any failure of the Contractor to complete early shall be created, whether or not the Owner approves such schedule.
6. The Contractor acknowledges that the Owner may retain the services of a scheduling consultant at the Owner's expense. The Contractor shall cooperate with any such scheduling consultant at the Owner's direction, including without limitation, with regard to the preparation of the Project schedule.

2.06 *Electronic Transmittals*

A. Except as otherwise stated elsewhere in the Contract, the Owner, Engineer, and Contractor may send, and shall accept, Electronic Documents transmitted by Electronic Means.

B. If the Contract does not establish protocols for Electronic Means, then Owner, Engineer, and Contractor shall jointly develop such protocols.

C. Subject to any governing protocols for Electronic Means, when transmitting Electronic Documents by Electronic Means, the transmitting party makes no representations as to long-term compatibility, usability, or readability of the Electronic Documents resulting from the recipient's use of software application packages, operating systems, or computer hardware differing from those used in the drafting or transmittal of the Electronic Documents.

Copyright© 2018 National Society of Professional Engineers, American Council of Engineering Companies, and American Society of Civil Engineers. All rights reserved.

ARTICLE 3—CONTRACT DOCUMENTS: INTENT, REQUIREMENTS, REUSE

3.01 *Intent*

A. The Contract Documents are complementary; what is required by one Contract Document is as binding as if required by all.

B. It is the intent of the Contract Documents to describe a functionally complete Project (or part thereof) to be constructed in accordance with the Contract Documents.

C. Unless otherwise stated in the Contract Documents, if there is a discrepancy between the electronic versions of the Contract Documents (including any printed copies derived from such electronic versions) and the printed record version, the printed record version will govern.

D. The Contract supersedes prior negotiations, representations, and agreements, whether written or oral.

E. Engineer will issue clarifications and interpretations of the Contract Documents as provided herein.

F. Any provision or part of the Contract Documents held to be void or unenforceable under any Law or Regulation will be deemed stricken, and all remaining provisions will continue to be valid and binding upon Owner and Contractor, which agree that the Contract Documents will be reformed to replace such stricken provision or part thereof with a valid and enforceable provision that comes as close as possible to expressing the intention of the stricken provision.

G. Nothing in the Contract Documents creates:

1. any contractual relationship between Owner or Engineer and any Subcontractor, Supplier, or other individual or entity performing or furnishing any of the Work, for the benefit of such Subcontractor, Supplier, or other individual or entity; or

2. any obligation on the part of Owner or Engineer to pay or to see to the payment of any money due any such Subcontractor, Supplier, or other individual or entity, except as may otherwise be required by Laws and Regulations.

3.02 *Reference Standards*

A. *Standards Specifications, Codes, Laws and Regulations*

1. Reference in the Contract Documents to standard specifications, manuals, reference standards, or codes of any technical society, organization, or association, or to Laws or Regulations, whether such reference be specific or by implication, means the standard specification, manual, reference standard, code, or Laws or Regulations in effect at the time of opening of Bids (or on the Effective Date of the Contract if there were no Bids), except as may be otherwise specifically stated in the Contract Documents.

2. No provision of any such standard specification, manual, reference standard, or code, and no instruction of a Supplier, will be effective to change the duties or responsibilities of Owner, Contractor, or Engineer from those set forth in the part of the Contract Documents prepared by or for Engineer. No such provision or instruction shall be effective to assign to Owner or Engineer any duty or authority to supervise or direct the

Copyright© 2018 National Society of Professional Engineers, American Council of Engineering Companies, and American Society of Civil Engineers. All rights reserved.

performance of the Work, or any duty or authority to undertake responsibility inconsistent with the provisions of the part of the Contract Documents prepared by or for Engineer.

3.03 *Reporting and Resolving Discrepancies*

A. *Reporting Discrepancies*

1. *Contractor's Verification of Figures and Field Measurements*: Before undertaking each part of the Work, Contractor shall carefully study the Contract Documents, and check and verify pertinent figures and dimensions therein, particularly with respect to applicable field measurements. Contractor shall promptly report in writing to Engineer any conflict, error, ambiguity, or discrepancy that Contractor discovers, or has actual knowledge of, and shall not proceed with any Work affected thereby until the conflict, error, ambiguity, or discrepancy is resolved by a clarification or interpretation by Engineer, or by an amendment or supplement to the Contract issued pursuant to Paragraph 11.01.

2. *Contractor's Review of Contract Documents*: If, before or during the performance of the Work, Contractor discovers any conflict, error, ambiguity, or discrepancy within the Contract Documents, or between the Contract Documents and (a) any applicable Law or Regulation, (b) actual field conditions, (c) any standard specification, manual, reference standard, or code, or (d) any instruction of any Supplier, then Contractor shall promptly report it to Engineer in writing. Contractor shall not proceed with the Work affected thereby (except in an emergency as required by Paragraph 7.15) until the conflict, error, ambiguity, or discrepancy is resolved, by a clarification or interpretation by Engineer, or by an amendment or supplement to the Contract issued pursuant to Paragraph 11.01.

3. Contractor shall not be liable to Owner or Engineer for failure to report any conflict, error, ambiguity, or discrepancy in the Contract Documents unless Contractor had actual knowledge thereof or could have discovered the conflict or error by careful review of the Contract Documents including pertinent figures and applicable field measurements and dimensions therein.

B. *Resolving Discrepancies*

1. Except as may be otherwise specifically stated in the Contract Documents, the provisions of the part of the Contract Documents prepared by or for Engineer take precedence in resolving any conflict, error, ambiguity, or discrepancy between such provisions of the Contract Documents and:

   a. the provisions of any standard specification, manual, reference standard, or code, or the instruction of any Supplier (whether or not specifically incorporated by reference as a Contract Document); or

   b. the provisions of any Laws or Regulations applicable to the performance of the Work (unless such an interpretation of the provisions of the Contract Documents would result in violation of such Law or Regulation).

   c. In the event there is a discrepancy or conflict in the Drawings and Specifications applicable to a particular detail or assembly of the Work, Contractor must promptly seek clarification from Engineer before proceeding with the Work. Subject to

Copyright© 2018 National Society of Professional Engineers, American Council of Engineering Companies, and American Society of Civil Engineers. All rights reserved.

Paragraph 3.03.A.3. above, if Contractor proceeds with the Work without seeking such clarification, Contractor will be bound by the stricter and more expensive detail or assembly. Contractor agrees and recognizes that in agreeing to the Contract Price it has factored in the costs associated with installing the stricter and more expensive detail or assembly.

3.04 *Requirements of the Contract Documents*

A. During the performance of the Work and until final payment, Contractor and Owner shall submit to the Engineer in writing all matters in question concerning the requirements of the Contract Documents (sometimes referred to as requests for information or interpretation—RFIs), or relating to the acceptability of the Work under the Contract Documents, as soon as possible after such matters arise. Engineer will be the initial interpreter of the requirements of the Contract Documents, and judge of the acceptability of the Work.

B. Engineer will, with reasonable promptness, render a written clarification, interpretation, or decision on the issue submitted, or initiate an amendment or supplement to the Contract Documents. Engineer's written clarification, interpretation, or decision will be final and binding on Contractor, unless it appeals by submitting a Change Proposal, and on Owner, unless it appeals by filing a Claim.

C. If a submitted matter in question concerns terms and conditions of the Contract Documents that do not involve (1) the performance or acceptability of the Work under the Contract Documents, (2) the design (as set forth in the Drawings, Specifications, or otherwise), or (3) other engineering or technical matters, then Engineer will promptly notify Owner and Contractor in writing that Engineer is unable to provide a decision or interpretation. If Owner and Contractor are unable to agree on resolution of such a matter in question, either party may pursue resolution as provided in Article 12.

3.05 *Reuse of Documents*

A. Contractor and its Subcontractors and Suppliers shall not:

1. have or acquire any title to or ownership rights in any of the Drawings, Specifications, or other documents (or copies of any thereof) prepared by or bearing the seal of Engineer or its consultants, including electronic media versions, or reuse any such Drawings, Specifications, other documents, or copies thereof on extensions of the Project or any other project without written consent of Owner and Engineer and specific written verification or adaptation by Engineer; or

2. have or acquire any title or ownership rights in any other Contract Documents, reuse any such Contract Documents for any purpose without Owner's express written consent, or violate any copyrights pertaining to such Contract Documents.

B. The prohibitions of this Paragraph 3.05 will survive final payment, or termination of the Contract. Nothing herein precludes Contractor from retaining copies of the Contract Documents for record purposes.

Copyright© 2018 National Society of Professional Engineers, American Council of Engineering Companies, and American Society of Civil Engineers. All rights reserved.

ARTICLE 4—COMMENCEMENT AND PROGRESS OF THE WORK

4.01 *Commencement of Contract Times; Notice to Proceed*

A. The Contract Times shall not commence to run and Contractor shall not commence the Work until Owner issues a Notice to Proceed. A Notice to Proceed may be issued by Owner at any time after the Effective Date of the Contract.

4.02 *Starting the Work*

A. Contractor shall start to perform the Work on the date specified in the Notice to Proceed which shall cause the Contract Times to commence to run. No Work may be done at the Site prior to such date.

4.03 *Reference Points*

A. Owner shall provide engineering surveys to establish reference points for construction which in Engineer's judgment are necessary to enable Contractor to proceed with the Work. Contractor shall be responsible for laying out the Work, shall protect and preserve the established reference points and property monuments, and shall make no changes or relocations without the prior written approval of Owner. Contractor shall report to Engineer whenever any reference point or property monument is lost or destroyed or requires relocation because of necessary changes in grades or locations, and shall be responsible for the accurate replacement or relocation of such reference points or property monuments by professionally qualified personnel.

B. Contractor shall lay-out and verify all field dimensions and measurements at the Site before proceeding with any portion of the Work.

4.04 *Progress Schedule*

A. Contractor shall adhere to the Progress Schedule established in accordance with Paragraph 2.05 as it may be adjusted from time to time as provided below.

1. Contractor shall submit to Engineer for acceptance (to the extent indicated in Paragraph 2.05) proposed adjustments in the Progress Schedule that will not result in changing the Contract Times.

2. Proposed adjustments in the Progress Schedule that will change the Contract Times must be submitted in accordance with the requirements of Article 11.

B. Contractor shall carry on the Work and adhere to the Progress Schedule during all disputes or disagreements with Owner. No Work will be delayed or postponed pending resolution of any disputes or disagreements, or during any appeal process, except as permitted by Paragraph 16.04, or as Owner and Contractor may otherwise agree in writing.

4.05 *Delays in Contractor's Progress*

A. If Owner, Engineer, or anyone for whom Owner is responsible, delays, disrupts, or interferes with the performance or progress of the Work, then Contractor shall only be entitled to an equitable adjustment in Contract Times.

Copyright© 2018 National Society of Professional Engineers, American Council of Engineering Companies, and American Society of Civil Engineers. All rights reserved.

B. Contractor shall not be entitled to an adjustment in Contract Price or Contract Times for delay, disruption, or interference caused by or within the control of Contractor. Delay, disruption, and interference attributable to and within the control of a Subcontractor or Supplier shall be deemed to be within the control of Contractor.

C. If Contractor's performance or progress is delayed, disrupted, or interfered with by unanticipated causes not the fault of and beyond the control of Owner, Contractor, and those for which they are responsible, then Contractor shall be entitled to an equitable adjustment in Contract Times. Such an adjustment will be Contractor's sole and exclusive remedy for the delays, disruption, and interference described in this paragraph. Unanticipated causes of delay, disruption, or interference that may give rise to an adjustment in Contract Times under this paragraph include but are not limited to the following:

1. Severe and unavoidable natural catastrophes such as fires, floods, epidemics, and earthquakes;

2. Acts or failures to act of third-party utility owners or other third-party entities (other than those third-party utility owners or other third-party entities performing other work at or adjacent to the Site as arranged by or under contract with Owner, as contemplated in Article 8); and

3. Acts of war or terrorism.

D. Contractor's entitlement to an adjustment of Contract Times is limited as follows:

1. Contractor's entitlement to an adjustment of the Contract Times is conditioned on the delay, disruption, or interference adversely affecting an activity on the critical path to completion of the Work, as of the time of the delay, disruption, or interference.

2. Deleted in its entirety.

3. Adjustments of Contract Times are subject to the provisions of Article 11.

E. Each Contractor request or Change Proposal seeking an increase in Contract Times must be supplemented by supporting data that sets forth in detail the following:

1. The circumstances that form the basis for the requested adjustment;

2. The date upon which each cause of delay, disruption, or interference began to affect the progress of the Work;

3. The date upon which each cause of delay, disruption, or interference ceased to affect the progress of the Work;

4. The number of days' increase in Contract Times claimed as a consequence of each such cause of delay, disruption, or interference; and

5. Deleted in its entirety.

Contractor shall also furnish such additional supporting documentation as Owner or Engineer may require including, where appropriate, a revised progress schedule indicating all the activities affected by the delay, disruption, or interference, and an explanation of the effect of the delay, disruption, or interference on the critical path to completion of the Work.

Copyright© 2018 National Society of Professional Engineers, American Council of Engineering Companies, and American Society of Civil Engineers. All rights reserved.

F. Delays, disruption, and interference to the performance or progress of the Work resulting from the existence of a differing subsurface or physical condition, an Underground Facility that was not shown or indicated by the Contract Documents, or not shown or indicated with reasonable accuracy, and those resulting from Hazardous Environmental Conditions, are governed by Article 5, together with the provisions of Paragraphs 4.05.D and 4.05.E.

G. Paragraph 8.03 addresses delays, disruption, and interference to the performance or progress of the Work resulting from the performance of certain other work at or adjacent to the Site.

ARTICLE 5—SITE; SUBSURFACE AND PHYSICAL CONDITIONS; HAZARDOUS ENVIRONMENTAL CONDITIONS

5.01 *Availability of Lands*

A. Owner shall furnish the Site. Owner shall notify Contractor in writing of any encumbrances or restrictions not of general application but specifically related to use of the Site with which Contractor must comply in performing the Work.

B. Deleted in its entirety.

C. Contractor shall provide for all additional lands and access thereto that may be required for temporary construction facilities, staging, or storage of materials and equipment. Contractor shall have the obligation to restore the additional lands to their original condition.

5.02 *Use of Site and Other Areas*

A. *Limitation on Use of Site and Other Areas*

1. Contractor shall confine construction equipment, temporary construction facilities, the storage of materials and equipment, and the operations of workers to the Site, adjacent areas that Contractor has arranged to use through construction easements or otherwise, and other adjacent areas permitted by Laws and Regulations, and shall not unreasonably encumber the Site and such other adjacent areas with construction equipment or other materials or equipment. Contractor shall assume full responsibility for (a) damage to the Site; (b) damage to any such other adjacent areas used for Contractor's operations; (c) damage to any other adjacent land or areas, or to improvements, structures, utilities, or similar facilities located at such adjacent lands or areas; and (d) for injuries and losses sustained by the owners or occupants of any such land or areas; provided that such damage or injuries result from the performance of the Work or from other actions or conduct of the Contractor or those for which Contractor is responsible.

2. If a damage or injury claim is made by the owner or occupant of any such land or area because of the performance of the Work, or because of other actions or conduct of the Contractor or those for which Contractor is responsible, Contractor shall (a) take immediate corrective or remedial action as required by Paragraph 7.13, or otherwise; (b) promptly attempt to settle the claim as to all parties through negotiations with such owner or occupant, or otherwise resolve the claim by arbitration or other dispute resolution proceeding, or in a court of competent jurisdiction; and (c) to the fullest extent permitted by Laws and Regulations, indemnify and hold harmless Owner and Engineer, and the officers, directors, members, partners, employees, agents, consultants and

Copyright© 2018 National Society of Professional Engineers, American Council of Engineering Companies, and American Society of Civil Engineers. All rights reserved.

subcontractors of each and any of them, from and against any such claim, and against all costs, losses, and damages (including but not limited to all fees and charges of engineers, architects, attorneys, and other professionals and all court or arbitration or other dispute resolution costs) arising out of or relating to any claim or action, legal or equitable, brought by any such owner or occupant against Owner, Engineer, or any other party indemnified hereunder to the extent caused directly or indirectly, in whole or in part by, or based upon, Contractor's performance of the Work, or because of other actions or conduct of the Contractor or those for which Contractor is responsible.

B. *Removal of Debris During Performance of the Work*: During the progress of the Work the Contractor shall keep the Site and other adjacent areas free from accumulations of waste materials, rubbish, and other debris. The Contractor shall prevent paint, mortar, and concrete splatter on concrete sidewalks and asphalt paths. Any such splatter shall be immediately removed so no evidence of splatter remains. All construction debris shall be removed in a timely manner. Surrounding graded and grassed areas shall be regularly magnetically scanned to collect miscellaneous nails and other sharp objects; the Contractor shall remove such objects from the construction site. Removal and disposal of such waste materials, rubbish, and other debris will conform to applicable Laws and Regulations.

C. *Cleaning*: Prior to Substantial Completion of the Work Contractor shall clean the Site and the Work and make it ready for utilization by Owner. At the completion of the Work Contractor shall remove from the Site and adjacent areas all tools, appliances, construction equipment and machinery, and surplus materials and shall restore to original condition all property not designated for alteration by the Contract Documents.

D. *Loading of Structures*: Contractor shall not load nor permit any part of any structure to be loaded in any manner that will endanger the structure, nor shall Contractor subject any part of the Work or adjacent structures or land to stresses or pressures that will endanger them.

5.03 *Subsurface and Physical Conditions*

A. *Reports and Drawings*: The Supplementary Conditions identify:

1. Those reports of explorations and tests of subsurface conditions at or adjacent to the Site that contain Technical Data;

2. Those drawings of existing physical conditions at or adjacent to the Site, including those drawings depicting existing surface or subsurface structures at or adjacent to the Site (except Underground Facilities), that contain Technical Data; and

3. Technical Data contained in such reports and drawings.

B. *Underground Facilities*: Underground Facilities are shown or indicated on the Drawings, pursuant to Paragraph 5.05, and not in the drawings referred to in Paragraph 5.03.A. Information and data regarding the presence or location of Underground Facilities are not intended to be categorized, identified, or defined as Technical Data.

C. *Reliance by Contractor on Technical Data*: Contractor may rely upon the accuracy of the Technical Data expressly identified in the Supplementary Conditions with respect to such reports and drawings, but such reports and drawings are not Contract Documents and shall under no circumstances relieve Contractor from visiting the Site and becoming familiar with

Copyright© 2018 National Society of Professional Engineers, American Council of Engineering Companies, and American Society of Civil Engineers. All rights reserved.

and satisfied as to the general, local, and Site conditions that may affect cost, progress, and performance of the Work. If no such express identification has been made, then Contractor may rely upon the accuracy of the Technical Data as defined in Paragraph 1.01.A.46.b.

D. *Limitations of Other Data and Documents*: Except for such reliance on Technical Data, Contractor may not rely upon or make any claim against Owner or Engineer, or any of their officers, directors, members, partners, employees, agents, consultants, or subcontractors, with respect to:

1. the completeness of such reports and drawings for Contractor's purposes, including, but not limited to, any aspects of the means, methods, techniques, sequences, and procedures of construction to be employed by Contractor, and safety precautions and programs incident thereto;
2. other data, interpretations, opinions, and information contained in such reports or shown or indicated in such drawings;
3. the contents of other Site-related documents made available to Contractor, such as record drawings from other projects at or adjacent to the Site, or Owner's archival documents concerning the Site; or
4. any Contractor interpretation of or conclusion drawn from any Technical Data or any such other data, interpretations, opinions, or information.

5.04 *Differing Subsurface or Physical Conditions*

A. *Notice by Contractor*: If Contractor believes that any subsurface or physical condition that is uncovered or revealed at the Site:

1. is of such a nature as to establish that any Technical Data on which Contractor is entitled to rely as provided in Paragraph 5.03 is materially inaccurate;
2. is of such a nature as to require a change in the Drawings or Specifications;
3. differs materially from that shown or indicated in the Contract Documents; or
4. is of an unusual nature, and differs materially from conditions ordinarily encountered and generally recognized as inherent in work of the character provided for in the Contract Documents;

then Contractor shall, promptly after first becoming aware thereof and before further disturbing the subsurface or physical conditions or performing any Work in connection therewith (except in an emergency as required by Paragraph 7.15), notify Owner and Engineer in writing about such condition within 5 days. Contractor shall not further disturb such condition or perform any Work in connection therewith (except with respect to an emergency) until receipt of a written statement permitting Contractor to do so.

B. *Engineer's Review*: After receipt of written notice as required by the preceding paragraph, Engineer will promptly review the subsurface or physical condition in question; determine whether it is necessary for Owner to obtain additional exploration or tests with respect to the condition; conclude whether the condition falls within any one or more of the differing site condition categories in Paragraph 5.04.A; obtain any pertinent cost or schedule information from Contractor; prepare recommendations to Owner regarding the Contractor's resumption

Copyright© 2018 National Society of Professional Engineers, American Council of Engineering Companies, and American Society of Civil Engineers. All rights reserved.

of Work in connection with the subsurface or physical condition in question and the need for any change in the Drawings or Specifications; and advise Owner in writing of Engineer's findings, conclusions, and recommendations.

C. *Owner's Statement to Contractor Regarding Site Condition*: After receipt of Engineer's written findings, conclusions, and recommendations, Owner shall issue a written statement to Contractor (with a copy to Engineer) regarding the subsurface or physical condition in question, addressing the resumption of Work in connection with such condition, indicating whether any change in the Drawings or Specifications will be made, and adopting or rejecting Engineer's written findings, conclusions, and recommendations, in whole or in part.

D. *Early Resumption of Work*: If at any time Engineer determines that Work in connection with the subsurface or physical condition in question may resume prior to completion of Engineer's review or Owner's issuance of its statement to Contractor, because the condition in question has been adequately documented, and analyzed on a preliminary basis, then the Engineer may at its discretion instruct Contractor to resume such Work.

E. *Possible Price and Times Adjustments*

1. Contractor shall be entitled to an equitable adjustment in Contract Price or Contract Times, to the extent that the existence of a differing subsurface or physical condition, or any related delay, disruption, or interference, causes an increase or decrease in Contractor's cost of, or time required for, performance of the Work; subject, however, to the following:

    a. Such condition must fall within any one or more of the categories described in Paragraph 5.04.A;

    b. With respect to Work that is paid for on a unit price basis, any adjustment in Contract Price will be subject to the provisions of Paragraph 13.03; and,

    c. Contractor's entitlement to an adjustment of the Contract Times is subject to the provisions of Paragraphs 4.05.D and 4.05.E.

2. Contractor shall not be entitled to any adjustment in the Contract Price or Contract Times with respect to a subsurface or physical condition if:

    a. Contractor knew of the existence of such condition at the time Contractor made a commitment to Owner with respect to Contract Price and Contract Times by the submission of a Bid or becoming bound under a negotiated contract, or otherwise;

    b. The existence of such condition reasonably could have been discovered or revealed as a result of any examination, investigation, exploration, test, or study of the Site and contiguous areas expressly required by the Bidding Requirements or Contract Documents to be conducted by or for Contractor prior to Contractor's making such commitment; or

    c. Contractor failed to give the written notice required by Paragraph 5.04.A.

3. If Owner and Contractor agree regarding Contractor's entitlement to and the amount or extent of any adjustment in the Contract Price or Contract Times, then any such adjustment will be set forth in a Change Order.

Copyright© 2018 National Society of Professional Engineers, American Council of Engineering Companies, and American Society of Civil Engineers. All rights reserved.

4. Contractor may submit a Change Proposal regarding its entitlement to or the amount or extent of any adjustment in the Contract Price or Contract Times, no later than 30 days after Owner's issuance of the Owner's written statement to Contractor regarding the subsurface or physical condition in question.

F. *Underground Facilities; Hazardous Environmental Conditions*: Paragraph 5.05 governs rights and responsibilities regarding the presence or location of Underground Facilities. Paragraph 5.06 governs rights and responsibilities regarding Hazardous Environmental Conditions. The provisions of Paragraphs 5.03 and 5.04 are not applicable to the presence or location of Underground Facilities, or to Hazardous Environmental Conditions.

5.05 *Underground Facilities*

A. *Contractor's Responsibilities*: Unless it is otherwise expressly provided in the Supplementary Conditions, the cost of all of the following are included in the Contract Price, and Contractor shall have full responsibility for:

1. reviewing and checking all information and data regarding existing Underground Facilities at the Site;

2. complying with applicable state and local utility damage prevention Laws and Regulations;

3. verifying the actual location of those Underground Facilities shown or indicated in the Contract Documents as being within the area affected by the Work, by exposing such Underground Facilities during the course of construction;

4. coordination of the Work with the owners (including Owner) of such Underground Facilities, during construction; and

5. the safety and protection of all existing Underground Facilities at the Site, and repairing any damage thereto resulting from the Work.

B. *Notice by Contractor*: If Contractor believes that an Underground Facility that is uncovered or revealed at the Site was not shown or indicated on the Drawings, or was not shown or indicated on the Drawings with reasonable accuracy, then Contractor shall, promptly after first becoming aware thereof and before further disturbing conditions affected thereby or performing any Work in connection therewith (except in an emergency as required by Paragraph 7.15), notify Owner and Engineer in writing regarding such Underground Facility within 5 days.

C. *Engineer's Review*: Engineer will:

1. promptly review the Underground Facility and conclude whether such Underground Facility was not shown or indicated on the Drawings, or was not shown or indicated with reasonable accuracy;

2. identify and communicate with the owner of the Underground Facility; prepare recommendations to Owner (and if necessary issue any preliminary instructions to Contractor) regarding the Contractor's resumption of Work in connection with the Underground Facility in question;

Copyright© 2018 National Society of Professional Engineers, American Council of Engineering Companies, and American Society of Civil Engineers. All rights reserved.

3. obtain any pertinent cost or schedule information from Contractor; determine the extent, if any, to which a change is required in the Drawings or Specifications to reflect and document the consequences of the existence or location of the Underground Facility; and

4. advise Owner in writing of Engineer's findings, conclusions, and recommendations.

During such time, Contractor shall be responsible for the safety and protection of such Underground Facility.

D. *Owner's Statement to Contractor Regarding Underground Facility*: After receipt of Engineer's written findings, conclusions, and recommendations, Owner shall issue a written statement to Contractor (with a copy to Engineer) regarding the Underground Facility in question addressing the resumption of Work in connection with such Underground Facility, indicating whether any change in the Drawings or Specifications will be made, and adopting or rejecting Engineer's written findings, conclusions, and recommendations in whole or in part.

E. *Early Resumption of Work*: If at any time Engineer determines that Work in connection with the Underground Facility may resume prior to completion of Engineer's review or Owner's issuance of its statement to Contractor, because the Underground Facility in question and conditions affected by its presence have been adequately documented, and analyzed on a preliminary basis, then the Engineer may at its discretion instruct Contractor to resume such Work.

F. *Possible Price and Times Adjustments*

1. Contractor shall be entitled to an equitable adjustment in the Contract Price or Contract Times, to the extent that any existing Underground Facility at the Site that was not shown or indicated on the Drawings, or was not shown or indicated with reasonable accuracy, or any related delay, disruption, or interference, causes an increase or decrease in Contractor's cost of, or time required for, performance of the Work; subject, however, to the following:

   a. With respect to Work that is paid for on a unit price basis, any adjustment in Contract Price will be subject to the provisions of Paragraph 13.03;

   b. Contractor's entitlement to an adjustment of the Contract Times is subject to the provisions of Paragraphs 4.05.D and 4.05.E; and

   c. Contractor gave the notice required in Paragraph 5.05.B.

2. If Owner and Contractor agree regarding Contractor's entitlement to and the amount or extent of any adjustment in the Contract Price or Contract Times, then any such adjustment will be set forth in a Change Order.

3. Contractor may submit a Change Proposal regarding its entitlement to or the amount or extent of any adjustment in the Contract Price or Contract Times, no later than 30 days after Owner's issuance of the Owner's written statement to Contractor regarding the Underground Facility in question.

4. The information and data shown or indicated on the Drawings with respect to existing Underground Facilities at the Site is based on information and data (a) furnished by the owners of such Underground Facilities, or by others, (b) obtained from available records,

Copyright© 2018 National Society of Professional Engineers, American Council of Engineering Companies, and American Society of Civil Engineers. All rights reserved.

or (c) gathered in an investigation conducted in accordance with the current edition of ASCE 38, Standard Guideline for the Collection and Depiction of Existing Subsurface Utility Data, by the American Society of Civil Engineers. If such information or data is incorrect or incomplete, Contractor's remedies are limited to those set forth in this Paragraph 5.05.F.

5.06 *Hazardous Environmental Conditions at Site*

A. *Reports and Drawings*: The Supplementary Conditions identify:

1. those reports known to Owner relating to Hazardous Environmental Conditions that have been identified at or adjacent to the Site;

2. drawings known to Owner relating to Hazardous Environmental Conditions that have been identified at or adjacent to the Site; and

3. Technical Data contained in such reports and drawings.

B. *Reliance by Contractor on Technical Data Authorized*: Contractor may rely upon the accuracy of the Technical Data expressly identified in the Supplementary Conditions with respect to such reports and drawings, but such reports and drawings are not Contract Documents. If no such express identification has been made, then Contractor may rely on the accuracy of the Technical Data as defined in Paragraph 1.01.A.46.b. Except for such reliance on Technical Data, Contractor may not rely upon or make any claim against Owner or Engineer, or any of their officers, directors, members, partners, employees, agents, consultants, or subcontractors, with respect to:

1. the completeness of such reports and drawings for Contractor's purposes, including, but not limited to, any aspects of the means, methods, techniques, sequences and procedures of construction to be employed by Contractor, and safety precautions and programs incident thereto;

2. other data, interpretations, opinions, and information contained in such reports or shown or indicated in such drawings; or

3. any Contractor interpretation of or conclusion drawn from any Technical Data or any such other data, interpretations, opinions or information.

C. Contractor shall not be responsible for removing or remediating any Hazardous Environmental Condition encountered, uncovered, or revealed at the Site unless such removal or remediation is expressly identified in the Contract Documents to be within the scope of the Work.

D. Contractor shall be responsible for controlling, containing, and duly removing all Constituents of Concern brought to the Site by Contractor, Subcontractors, Suppliers, or anyone else for whom Contractor is responsible, and for any associated costs; and for the costs of removing and remediating any Hazardous Environmental Condition created by the presence of any such Constituents of Concern.

E. If Contractor encounters, uncovers, or reveals a Hazardous Environmental Condition whose removal or remediation is not expressly identified in the Contract Documents as being within the scope of the Work, or if Contractor or anyone for whom Contractor is responsible creates

Copyright© 2018 National Society of Professional Engineers, American Council of Engineering Companies, and American Society of Civil Engineers. All rights reserved.

a Hazardous Environmental Condition, then Contractor shall immediately: (1) secure or otherwise isolate such condition; (2) stop all Work in connection with such condition and in any area affected thereby (except in an emergency as required by Paragraph 7.15); and (3) notify Owner and Engineer (and promptly thereafter confirm such notice in writing) within 5 days of first becoming aware of the condition. Owner shall promptly consult with Engineer concerning the necessity for Owner to retain a qualified expert to evaluate such condition or take corrective action, if any. Promptly after consulting with Engineer, Owner shall take such actions as are necessary to permit Owner to timely obtain required permits and provide Contractor the written notice required by Paragraph 5.06.F. If Contractor or anyone for whom Contractor is responsible created the Hazardous Environmental Condition in question, then Owner may remove and remediate the Hazardous Environmental Condition, and impose a set-off against payments to account for the associated costs.

F. Contractor shall not resume Work in connection with such Hazardous Environmental Condition or in any affected area until after Owner has obtained any required permits related thereto, and delivered written notice to Contractor either (1) specifying that such condition and any affected area is or has been rendered safe for the resumption of Work, or (2) specifying any special conditions under which such Work may be resumed safely. An equitable adjustment shall be made in the Contract Price or Contract Time, or both, to the extent that (i) they are attributable to the existence or location of any Hazardous Environmental Condition that was not shown or indicated or not shown or indicated with reasonable accuracy in the Contract Documents or a report listed in the Supplemental Conditions, (ii) Contractor did not know of and could not reasonably have been expected to be aware of or to have anticipated the Hazardous Environmental Conditions, (iii) Contractor did not negligently, recklessly, or intentionally cause the Hazardous Environmental Condition, and (iv) Contractor notifies Owner and Engineer of such condition within 5 days after first becoming aware of such condition.

G. If Owner and Contractor cannot agree as to entitlement to or on the amount or extent, if any, of any adjustment in Contract Price or Contract Times, as a result of such Work stoppage, such special conditions under which Work is agreed to be resumed by Contractor, or any costs or expenses incurred in response to the Hazardous Environmental Condition, then within 30 days of Owner's written notice regarding the resumption of Work, Contractor may submit a Change Proposal, or Owner may impose a set-off. Entitlement to any such adjustment is subject to the provisions of Paragraphs 4.05.D, 4.05.E, 11.07, and 11.08.

H. If, after receipt of such written notice, Contractor does not agree to resume such Work based on a reasonable belief it is unsafe, or does not agree to resume such Work under such special conditions, then Owner may order the portion of the Work that is in the area affected by such condition to be deleted from the Work, following the contractual change procedures in Article 11. Owner may have such deleted portion of the Work performed by Owner's own forces or others in accordance with Article 8.

I. Deleted in its entirety.

J. Deleted in its entirety..

K. Deleted in its entirety.

Copyright© 2018 National Society of Professional Engineers, American Council of Engineering Companies, and American Society of Civil Engineers. All rights reserved.

ARTICLE 6—BONDS AND INSURANCE

6.01 *Performance, Payment, and Other Bonds*

A. Contractor shall furnish a payment and performance bond in accordance with Sec. 255.05, Florida Statutes, in an amount at least equal to the Contract Price, as security for the faithful performance and payment of Contractor's obligations under the Contract. These bonds must remain in effect until one year after the date when final payment becomes due or until completion of the correction period specified in Paragraph 15.08, whichever is later, except as provided otherwise by Laws or Regulations, the terms of a prescribed bond form, the Supplementary Conditions, or other provisions of the Contract. The obligations, duties, responsibilities, and requirements of Contractor set forth in this Contract shall be incorporated into Contractor's performance bond.

B. Contractor shall also furnish such other bonds (if any) as are required by the Supplementary Conditions or other provisions of the Contract.

C. All bonds must be in the form included in the Bidding Documents or otherwise specified by Owner prior to execution of the Contract~~,~~. A bond signed by an agent or attorney-in-fact must be accompanied by a certified copy of that individual's authority to bind the surety. The evidence of authority must show that it is effective on the date the agent or attorney-in-fact signed the accompanying bond. The payment and performance bonds shall be recorded in the public records of Volusia County, Florida.

D. Contractor shall obtain the required bonds from surety companies that are duly licensed or authorized, in Florida, to issue bonds in the required amounts.

E. If the surety on a bond furnished by Contractor is declared bankrupt or becomes insolvent, or the surety ceases to meet the requirements above, then Contractor shall promptly notify Owner and Engineer in writing and shall, within 20 days after the event giving rise to such notification, provide another bond and surety, both of which must comply with the bond and surety requirements above.

F. Prior to the date of commencement as set forth in the Notice to Proceed, if Contractor has failed to obtain a required bond, Owner may exclude the Contractor from the Site and exercise Owner's termination rights under Article 16.

G. Upon request to Owner from any Subcontractor, Supplier, or other person or entity claiming to have furnished labor, services, materials, or equipment used in the performance of the Work, Owner shall provide a copy of the payment bond to such person or entity.

H. Upon request to Contractor from any Subcontractor, Supplier, or other person or entity claiming to have furnished labor, services, materials, or equipment used in the performance of the Work, Contractor shall provide a copy of the payment bond to such person or entity.

6.02 *Insurance—General Provisions*

A. Contractor shall obtain and maintain insurance as required in this article and in the Supplementary Conditions. In the event of any conflict between this Paragraph 6.02 and the specific insurance requirements of Contractor set forth in Supplemental Conditions, the specific requirements in Supplemental Conditions shall govern.

Copyright© 2018 National Society of Professional Engineers, American Council of Engineering Companies, and American Society of Civil Engineers. All rights reserved.

B. All insurance required by the Contract to be purchased and maintained by Contractor shall be obtained from insurance companies that are duly licensed or authorized in the State of Florida to issue insurance policies for the required limits and coverages. Unless a different standard is indicated in the Supplementary Conditions, all companies that provide insurance policies required under this Contract shall have an A.M. Best rating of A-VII or better.

C. Alternative forms of insurance coverage, including but not limited to self-insurance and "Occupational Accident and Excess Employer's Indemnity Policies," are not sufficient to meet the insurance requirements of this Contract, unless expressly allowed in the Supplementary Conditions.

D. Contractor shall deliver to Owner, with copies to each additional insured identified in the Contract, certificates of insurance and endorsements establishing that Contractor has obtained and is maintaining the policies and coverages required by the Contract. Upon request by Owner or any other insured, Contractor shall also furnish other evidence of such required insurance, including but not limited to copies of policies, full disclosure of all relevant exclusions, and evidence of insurance required to be purchased and maintained by Subcontractors or Suppliers. In any documentation furnished under this provision, Contractor, Subcontractors, and Suppliers may block out (redact) (1) any confidential premium or pricing information and (2) any wording specific to a project or jurisdiction other than those applicable to this Contract.

E. Deleted in its entirety.

F. Failure of Owner to demand such certificates or other evidence of the Contractor's full compliance with these insurance requirements, or failure of Owner to identify a deficiency in compliance from the evidence provided, will not be construed as a waiver of the Contractor's obligation to obtain and maintain such insurance.

G. In addition to the liability insurance required to be provided by Contractor, the Owner, at Owner's option, may purchase and maintain Owner's own liability insurance. Owner's liability policies, if any, operate separately and independently from policies required to be provided by Contractor, and Contractor cannot rely upon Owner's liability policies for any of Contractor's obligations to the Owner, Engineer, or third parties.

H. Contractor shall require:

   1. Subcontractors to purchase and maintain worker's compensation, commercial general liability, and other insurance that is appropriate for their participation in the Project, and to name as additional insureds Owner and Engineer (and any other individuals or entities identified in the Supplementary Conditions as additional insureds on Contractor's liability policies) on each Subcontractor's commercial general liability insurance policy; and

   2. Suppliers to purchase and maintain insurance that is appropriate for their participation in the Project.

I. If Contractor does not purchase or maintain the insurance required by the Contract, Contractor shall notify the Owner in writing of such failure to purchase prior to the start of the Work, or of such failure to maintain prior to any change in the required coverage.

Copyright© 2018 National Society of Professional Engineers, American Council of Engineering Companies, and American Society of Civil Engineers. All rights reserved.

J. If Contractor has failed to obtain and maintain required insurance, Contractor's entitlement to enter or remain at the Site will end immediately, and Owner may impose an appropriate set-off against payment for any associated costs (including but not limited to the cost of purchasing necessary insurance coverage), and exercise Owner's termination rights under Article 16.

K. Without prejudice to any other right or remedy, if Contractor has failed to obtain required insurance, the Owner may elect (but is in no way obligated) to obtain equivalent insurance to protect Owner's interests at the expense of the Contactor who was required to provide such coverage, and the Contract Price will be adjusted accordingly.

L. Owner does not represent that insurance coverage and limits established in this Contract necessarily will be adequate to protect Contractor or Contractor's interests. Contractor is responsible for determining whether such coverage and limits are adequate to protect its interests, and for obtaining and maintaining any additional insurance that Contractor deems necessary.

M. The insurance and insurance limits required herein will not be deemed as a limitation on Contractor's liability, or that of its Subcontractors or Suppliers, under the indemnities granted to Owner and other individuals and entities in the Contract or otherwise.

N. All the policies of insurance required to be purchased and maintained under this Contract will contain a provision or endorsement that the coverage afforded will not be canceled, or renewal refused, until at least 10 days prior written notice has been given to the purchasing policyholder. Within three days of receipt of any such written notice, the purchasing policyholder shall provide a copy of the notice to each other insured and Engineer.

6.03 *Contractor's Insurance*

A. *Required Insurance*: Contractor shall purchase and maintain Worker's Compensation, Commercial General Liability, and other insurance pursuant to the specific requirements of the Supplementary Conditions.

B. *General Provisions*: The policies of insurance required by this Paragraph 6.03 as supplemented must:

1. include at least the specific coverages required;

2. be written for not less than the limits provided, or those required by Laws or Regulations, whichever is greater;

3. remain in effect at least until the Work is complete (as set forth in Paragraph 15.06.D), and longer if expressly required elsewhere in this Contract, and at all times thereafter when Contractor may be correcting, removing, or replacing defective Work as a warranty or correction obligation, or otherwise, or returning to the Site to conduct other tasks arising from the Contract;

4. apply with respect to the performance of the Work, whether such performance is by Contractor, any Subcontractor or Supplier, or by anyone directly or indirectly employed by any of them to perform any of the Work, or by anyone for whose acts any of them may be liable;

Copyright© 2018 National Society of Professional Engineers, American Council of Engineering Companies, and American Society of Civil Engineers. All rights reserved.

5. include completed operations coverage:

   a. Such insurance shall remain in effect for 10 years after Substantial Completion.

   b. Contractor shall furnish Owner and each additional insured identified in the Supplementary Conditions to whom a certificate of insurance has been issued, evidence satisfactory to Owner and any such additional insured of continuation of such insurance at final payment.

6.

7. include all necessary endorsements to support the stated requirements.

C. *Additional Insureds*: The Contractor's commercial general liability, automobile liability, employer's liability, umbrella or excess, pollution liability, and unmanned aerial vehicle liability policies, if required by this Contract, must:

1. include and list as additional insureds Owner, State of Florida, Department of Transportation and Engineer, and any individuals or entities identified as additional insureds in the Supplementary Conditions;

2. include coverage for the respective officers, directors, members, partners, employees, and consultants of all such additional insureds;

3. afford primary coverage to these additional insureds for all claims covered thereby (including as applicable those arising from both ongoing and completed operations);

4. not seek contribution from insurance maintained by the additional insured; and

5. as to commercial general liability insurance, apply to additional insureds with respect to liability caused in whole or in part by Contractor's acts or omissions, or the acts and omissions of those working on Contractor's behalf, in the performance of Contractor's operations.

6.04 *Builder's Risk and Other Property Insurance*

A. *Builder's Risk*: Unless otherwise provided in the Supplementary Conditions, Contractor shall purchase and maintain builder's risk insurance upon the Work on a completed value basis, in the amount of the Work's full insurable replacement cost (subject to such deductible amounts as may be provided in the Supplementary Conditions or required by Laws and Regulations). The specific requirements applicable to the builder's risk insurance are set forth in the Supplementary Conditions.

B. *Property Insurance for Facilities of Owner Where Work Will Occur*: Contractor is responsible for obtaining and maintaining property insurance covering each existing structure, building, or facility in which any part of the Work will occur, or to which any part of the Work will attach or be adjoined. Such property insurance will be written on a special perils (all-risk) form, on a replacement cost basis, providing coverage consistent with that required for the builder's risk insurance, and will be maintained until the Work is complete, as set forth in Paragraph 15.06.D. Such policy shall identify both Contractor and Owner as additional insureds. Contractor shall be solely responsible for any deductible.

Copyright© 2018 National Society of Professional Engineers, American Council of Engineering Companies, and American Society of Civil Engineers. All rights reserved.

C. *Property Insurance for Substantially Complete Facilities*: Promptly after Substantial Completion, and before actual occupancy or use of the substantially completed Work, Contractor will obtain property insurance for such substantially completed Work, and maintain such property insurance at least until the Work is complete, as set forth in Paragraph 15.06.D. Such property insurance will be written on a special perils (all-risk) form, on a replacement cost basis, and provide coverage consistent with that required for the builder's risk insurance. The builder's risk insurance may terminate upon written confirmation of Contractor's procurement of such property insurance.

D. *Partial Occupancy or Use by Owner*: If Owner will occupy or use a portion or portions of the Work prior to Substantial Completion of all the Work, as provided in Paragraph 15.04, then Owner through Contractor will provide advance notice of such occupancy or use to the builder's risk or all-risk insurer, and Contractor shall obtain an occupancy or use endorsement consenting to the continuation of coverage prior to Owner commencing such partial occupancy or use.

E. *Insurance of Other Property; Additional Insurance*: If the express insurance provisions of the Contract do not require or address the insurance of a property item or interest, then the entity or individual owning such property item will be responsible for insuring it. If Contractor elects to obtain other special insurance to be included in or supplement the builder's risk or property insurance policies provided under this Paragraph 6.04, it may do so at Contractor's expense.

6.05 *Property Losses; Subrogation*

A. The builder's risk insurance policy purchased and maintained in accordance with Paragraph 6.04 (or an installation floater policy if authorized by the Supplementary Conditions), will contain provisions to the effect that in the event of payment of any loss or damage the insurer will have no rights of recovery against any insureds thereunder, or against Engineer or its consultants, or their officers, directors, members, partners, employees, agents, consultants, or subcontractors.

1. Owner and Contractor waive all rights against each other and the respective officers, directors, members, partners, employees, agents, consultants, and subcontractors of each and any of them, for all losses and damages caused by, arising out of, or resulting from any of the perils, risks, or causes of loss covered by such policies and any other property insurance applicable to the Work; and, in addition, waive all such rights against Engineer, its consultants, all individuals or entities identified in the Supplementary Conditions as builder's risk or installation floater insureds, and the officers, directors, members, partners, employees, agents, consultants, and subcontractors of each and any of them, under such policies for losses and damages so caused.

2. None of the above waivers extends to the rights that any party making such waiver may have to the proceeds of insurance held by Contractor as trustee or fiduciary, or otherwise payable under any policy so issued.

B. Deleted in its entirety.

1. Deleted in its entirety.

C. Deleted in its entirety.

Copyright© 2018 National Society of Professional Engineers, American Council of Engineering Companies, and American Society of Civil Engineers. All rights reserved.

D. Contractor shall be responsible for assuring that each Subcontract contains provisions whereby the Subcontractor waives all rights against Owner, Contractor, all individuals or entities identified in the Supplementary Conditions as insureds, the Engineer and its consultants, and the officers, directors, members, partners, employees, agents, consultants, and subcontractors of each and any of them, for all losses and damages caused by, arising out of, relating to, or resulting from fire or other peril, risk, or cause of loss covered by builder's risk insurance, installation floater, and any other property insurance applicable to the Work.

6.06 *Receipt and Application of Property Insurance Proceeds*

A. Any insured loss under the builder's risk and other policies of property insurance required by Paragraph 6.04 will be adjusted and settled with the named insured that purchased the policy. Such named insured shall act as fiduciary for the other insureds, and give notice to such other insureds that adjustment and settlement of a claim is in progress. Any other insured may state its position regarding a claim for insured loss in writing within 15 days after notice of such claim.

B. Proceeds for such insured losses may be made payable by the insurer either jointly to multiple insureds, or to the named insured that purchased the policy in its own right and as fiduciary for other insureds, subject to the requirements of any applicable mortgage clause. A named insured receiving insurance proceeds under the builder's risk and other policies of insurance required by Paragraph 6.04 shall maintain such proceeds in a segregated account, and distribute such proceeds in accordance with such agreement as the parties in interest may reach, or as otherwise required under the dispute resolution provisions of this Contract or applicable Laws and Regulations.

C. If no other special agreement is reached, Contractor shall repair or replace the damaged Work, using allocated insurance proceeds.

D. Owner, at its sole discretion, may elect to fund the costs associated with any property insurance claim, excluding the deductible, and seek reimbursement from Contractor's policy that identifies both Contractor and Owner as named insureds. If Owner exercises this right, it shall have sole authority to settle and adjust any claim and receive reimbursement under the policy with the proceeds made payable to Owner. Contractor shall have the obligation to cooperate and comply with all terms and provisions of the policy and its failure to do so shall constitute a material breach of the Contract. If Owner does not elect this right, Contractor shall be required to fund the costs associated with any property insurance claim and seek reimbursement under the policy.

E. In the event of any conflict between this Paragraph 6.06 and the specific insurance requirements of Contractor set forth in the Supplemental Conditions, the specific insurance requirements in the Supplemental Conditions shall govern.

ARTICLE 7—CONTRACTOR'S RESPONSIBILITIES

7.01 *Contractor's Means and Methods of Construction*

A. Contractor shall be solely responsible for the means, methods, techniques, sequences, and procedures of construction.

Copyright© 2018 National Society of Professional Engineers, American Council of Engineering Companies, and American Society of Civil Engineers. All rights reserved.

B. If the Contract Documents note, or Contractor determines, that professional engineering or other design services are needed to carry out Contractor's responsibilities for construction means, methods, techniques, sequences, and procedures, or for Site safety, then Contractor shall cause such services to be provided by a properly licensed design professional, at Contractor's expense. Such services are not Owner-delegated professional design services under this Contract, and neither Owner nor Engineer has any responsibility with respect to (1) Contractor's determination of the need for such services, (2) the qualifications or licensing of the design professionals retained or employed by Contractor, (3) the performance of such services, or (4) any errors, omissions, or defects in such services.

7.02 *Supervision and Superintendence*

A. Contractor shall supervise, inspect, and direct the Work competently and efficiently, devoting such attention thereto and applying such skills and expertise as may be necessary to perform the Work in accordance with the Contract Documents.

B. At all times during the progress of the Work, Contractor shall assign a competent resident superintendent who will not be replaced without written notice to Owner and Engineer except under extraordinary circumstances.

7.03 *Labor; Working Hours*

A. Contractor shall provide competent, suitably qualified personnel to survey and lay out the Work and perform construction as required by the Contract Documents. Contractor shall maintain good discipline and order at the Site.

B. Contractor shall be fully responsible to Owner and Engineer for all acts and omissions of Contractor's employees; of Suppliers and Subcontractors, and their employees; and of any other individuals or entities performing or furnishing any of the Work, just as Contractor is responsible for Contractor's own acts and omissions. The Contractor agrees to remove from the Project an employee, Subcontractor, or Subcontractor employee that commits any breach of the Contract Documents or any breach of the Owner's written rules and regulations regarding jobsite conduct.

C. The Contractor shall enforce strict discipline and good order among the Contractor's employees and other persons carrying out the Work. Contractor shall not permit employment of unfit persons or persons not properly skilled in tasks assigned to them. The Contractor shall require all construction personnel to maintain a neat general appearance at all times. Shirts, trousers and proper shoes are required apparel. The display of vulgar words, signs or figures is prohibited. Sandals and flip-flops are prohibited on the Project site. The use of radios, tape players, CD players, boom boxes, sound producing devices and the like are prohibited on the Project site. The Contractor shall not be permitted to use restrooms or other sanitary facilities within the Owner's existing buildings or on-site facilities.

D. Except as otherwise required for the safety or protection of persons or the Work or property at the Site or adjacent thereto, and except as otherwise stated in the Contract Documents, all Work at the Site will be performed during regular working hours, Monday through Friday. Contractor will not perform Work on a Saturday, Sunday, or any legal holiday. Contractor may perform Work outside regular working hours or on Saturdays, Sundays, or legal holidays only with Owner's written consent, which will not be unreasonably withheld.

Copyright© 2018 National Society of Professional Engineers, American Council of Engineering Companies, and American Society of Civil Engineers. All rights reserved.

7.04 *Services, Materials, and Equipment*

A. Unless otherwise specified in the Contract Documents, Contractor shall provide and assume full responsibility for all services, materials, equipment, labor, transportation, construction equipment and machinery, tools, appliances, fuel, power, light, heat, telephone, water, sanitary facilities, temporary facilities, and all other facilities and incidentals necessary for the performance, testing, start up, and completion of the Work, whether or not such items are specifically called for in the Contract Documents.

B. All materials and equipment incorporated into the Work must be new and of good quality, except as otherwise provided in the Contract Documents. All special warranties and guarantees required by the Specifications will expressly run to the benefit of Owner. If required by Engineer, Contractor shall furnish satisfactory evidence (including reports of required tests) as to the source, kind, and quality of materials and equipment.

C. All materials and equipment must be stored, applied, installed, connected, erected, protected, used, cleaned, and conditioned in accordance with instructions of the applicable Supplier, except as otherwise may be provided in the Contract Documents.

7.05 *"Or Equals"*

A. *Contractor's Request; Governing Criteria*: Whenever an item of equipment or material is specified or described in the Contract Documents by using the names of one or more proprietary items or specific Suppliers, the Contract Price has been based upon Contractor furnishing such item as specified. The specification or description of such an item is intended to establish the type, function, appearance, and quality required. Unless the specification or description contains or is followed by words reading that no like, equivalent, or "or equal" item is permitted, Contractor may request that Engineer authorize the use of other items of equipment or material, or items from other proposed Suppliers, under the circumstances described below.

1. If Engineer in its sole discretion determines that an item of equipment or material proposed by Contractor is functionally equal to that named and sufficiently similar so that no change in related Work will be required, Engineer will deem it an "or equal" item. For the purposes of this paragraph, a proposed item of equipment or material will be considered functionally equal to an item so named if:

    a. in the exercise of reasonable judgment Engineer determines that the proposed item:

        1) is at least equal in materials of construction, quality, durability, appearance, strength, and design characteristics;

        2) will reliably perform at least equally well the function and achieve the results imposed by the design concept of the completed Project as a functioning whole;

        3) has a proven record of performance and availability of responsive service; and

        4) is not objectionable to Owner.

    b. Contractor certifies that, if the proposed item is approved and incorporated into the Work:

        1) there will be no increase in cost to the Owner or increase in Contract Times; and

Copyright© 2018 National Society of Professional Engineers, American Council of Engineering Companies, and American Society of Civil Engineers. All rights reserved.

2) the item will conform substantially to the detailed requirements of the item named in the Contract Documents.

B. *Contractor's Expense*: Contractor shall provide all data in support of any proposed "or equal" item at Contractor's expense.

C. *Engineer's Evaluation and Determination*: Engineer will be allowed a reasonable time to evaluate each "or-equal" request. Engineer may require Contractor to furnish additional data about the proposed "or-equal" item. Engineer will be the sole judge of acceptability. No "or-equal" item will be ordered, furnished, installed, or utilized until Engineer's review is complete and Engineer determines that the proposed item is an "or-equal," which will be evidenced by an approved Shop Drawing or other written communication. Engineer will advise Contractor in writing of any negative determination.

D. *Effect of Engineer's Determination*: Neither approval nor denial of an "or-equal" request will result in any change in Contract Price. The Engineer's denial of an "or-equal" request will be final and binding, and may not be reversed through an appeal under any provision of the Contract.

E. *Treatment as a Substitution Request*: If Engineer determines that an item of equipment or material proposed by Contractor does not qualify as an "or-equal" item, Contractor may request that Engineer consider the item a proposed substitute pursuant to Paragraph 7.06.

7.06 *Substitutes*

A. *Contractor's Request; Governing Criteria*: Unless the specification or description of an item of equipment or material required to be furnished under the Contract Documents contains or is followed by words reading that no substitution is permitted, Contractor may request that Engineer authorize the use of other items of equipment or material under the circumstances described below. To the extent possible such requests must be made before commencement of related construction at the Site.

1. Contractor shall submit sufficient information as provided below to allow Engineer to determine if the item of material or equipment proposed is functionally equivalent to that named and an acceptable substitute therefor. Engineer will not accept requests for review of proposed substitute items of equipment or material from anyone other than Contractor.

2. The requirements for review by Engineer will be as set forth in Paragraph 7.06.B, as supplemented by the Specifications, and as Engineer may decide is appropriate under the circumstances.

3. Contractor shall make written application to Engineer for review of a proposed substitute item of equipment or material that Contractor seeks to furnish or use. The application:

a. will certify that the proposed substitute item will:

1) perform adequately the functions and achieve the results called for by the general design;

2) be similar in substance to the item specified; and

3) be suited to the same use as the item specified.

Copyright© 2018 National Society of Professional Engineers, American Council of Engineering Companies, and American Society of Civil Engineers. All rights reserved.

b. will state:

1) the extent, if any, to which the use of the proposed substitute item will necessitate a change in Contract Times;

2) whether use of the proposed substitute item in the Work will require a change in any of the Contract Documents (or in the provisions of any other direct contract with Owner for other work on the Project) to adapt the design to the proposed substitute item; and

3) whether incorporation or use of the proposed substitute item in connection with the Work is subject to payment of any license fee or royalty.

c. will identify:

1) all variations of the proposed substitute item from the item specified; and

2) available engineering, sales, maintenance, repair, and replacement services.

d. will contain an itemized estimate of all costs or credits that will result directly or indirectly from use of such substitute item, including but not limited to changes in Contract Price, shared savings, costs of redesign, and claims of other contractors affected by any resulting change.

B. *Engineer's Evaluation and Determination*: Engineer will be allowed a reasonable time to evaluate each substitute request, and to obtain comments and direction from Owner. Engineer may require Contractor to furnish additional data about the proposed substitute item. Engineer will be the sole judge of acceptability. No substitute will be ordered, furnished, installed, or utilized until Engineer's review is complete and Engineer determines that the proposed item is an acceptable substitute. Engineer's determination will be evidenced by a Field Order or a proposed Change Order accounting for the substitution itself and all related impacts, including changes in Contract Price or Contract Times. Engineer will advise Contractor in writing of any negative determination.

C. *Special Guarantee*: Owner may require Contractor to furnish at Contractor's expense a special performance guarantee or other surety with respect to any substitute.

D. *Reimbursement of Engineer's Cost*: Engineer will record Engineer's costs in evaluating a substitute proposed or submitted by Contractor. Whether or not Engineer approves a substitute so proposed or submitted by Contractor, Contractor shall reimburse Owner for the reasonable charges of Engineer for evaluating each such proposed substitute. Contractor shall also reimburse Owner for the reasonable charges of Engineer for making changes in the Contract Documents (or in the provisions of any other direct contract with Owner) resulting from the acceptance of each proposed substitute.

E. *Contractor's Expense*: Contractor shall provide all data in support of any proposed substitute at Contractor's expense.

F. *Effect of Engineer's Determination*: If Engineer approves the substitution request, Contractor shall execute the proposed Change Order and proceed with the substitution. The Engineer's denial of a substitution request will be final and binding, and may not be reversed through an appeal under any provision of the Contract. Contractor may challenge the scope of

Copyright© 2018 National Society of Professional Engineers, American Council of Engineering Companies, and American Society of Civil Engineers. All rights reserved.

reimbursement costs imposed under Paragraph 7.06.D, by timely submittal of a Change Proposal.

7.07 *Concerning Subcontractors and Suppliers*

A. Contractor may retain Subcontractors and Suppliers for the performance of parts of the Work. Such Subcontractors and Suppliers must be acceptable to Owner. The Contractor's retention of a Subcontractor or Supplier for the performance of parts of the Work will not relieve Contractor's obligation to Owner to perform and complete the Work in accordance with the Contract Documents.

B. Contractor shall retain specific Subcontractors and Suppliers for the performance of designated parts of the Work if required by the Contract to do so.

C. Subsequent to the submittal of Contractor's Bid or final negotiation of the terms of the Contract, Owner may not require Contractor to retain any Subcontractor or Supplier to furnish or perform any of the Work against which Contractor has reasonable objection.

D. Prior to entry into any binding subcontract or purchase order, Contractor shall submit to Owner the identity of the proposed Subcontractor or Supplier (unless Owner has already deemed such proposed Subcontractor or Supplier acceptable during the bidding process or otherwise). Such proposed Subcontractor or Supplier shall be deemed acceptable to Owner unless Owner raises a substantive, reasonable objection within 5 days.

E. Owner may require the replacement of any Subcontractor or Supplier. Owner also may require Contractor to retain specific replacements; provided, however, that Owner may not require a replacement to which Contractor has a reasonable objection. If Contractor has submitted the identity of certain Subcontractors or Suppliers for acceptance by Owner, and Owner has accepted it (either in writing or by failing to make written objection thereto), then Owner may subsequently revoke the acceptance of any such Subcontractor or Supplier so identified solely on the basis of substantive, reasonable objection after due investigation. Contractor shall submit an acceptable replacement for the rejected Subcontractor or Supplier.

F. If Owner requires the replacement of any Subcontractor or Supplier retained by Contractor to perform any part of the Work, then Contractor shall be entitled to an adjustment in Contract Price or Contract Times, with respect to the replacement; and Contractor shall initiate a Change Proposal for such adjustment within 30 days of Owner's requirement of replacement.

G. No acceptance by Owner of any such Subcontractor or Supplier, whether initially or as a replacement, will constitute a waiver of the right of Owner to the completion of the Work in accordance with the Contract Documents.

H. On a monthly basis, Contractor shall submit to Engineer a complete list of all Subcontractors and Suppliers having a direct contract with Contractor, and of all other Subcontractors and Suppliers known to Contractor at the time of submittal.

I. Contractor shall be solely responsible for scheduling and coordinating the work of Subcontractors and Suppliers.

Copyright© 2018 National Society of Professional Engineers, American Council of Engineering Companies, and American Society of Civil Engineers. All rights reserved.

J. The divisions and sections of the Specifications and the identifications of any Drawings do not control Contractor in dividing the Work among Subcontractors or Suppliers, or in delineating the Work to be performed by any specific trade.

K. All Work performed for Contractor by a Subcontractor or Supplier must be pursuant to an appropriate contractual agreement that specifically binds the Subcontractor or Supplier to the applicable terms and conditions of the Contract for the benefit of Owner and Engineer.

L. Owner may furnish to any Subcontractor or Supplier, to the extent practicable, information about amounts paid to Contractor for Work performed for Contractor by the Subcontractor or Supplier.

M. Contractor shall restrict all Subcontractors and Suppliers from communicating with Engineer or Owner, except through Contractor or in case of an emergency, or as otherwise expressly allowed in this Contract.

7.08 *Patent Fees and Royalties*

A. Contractor shall pay all license fees and royalties and assume all costs incident to the use in the performance of the Work or the incorporation in the Work of any invention, design, process, product, or device which is the subject of patent rights or copyrights held by others. If an invention, design, process, product, or device is specified in the Contract Documents for use in the performance of the Work and if, to the actual knowledge of Owner or Engineer, its use is subject to patent rights or copyrights calling for the payment of any license fee or royalty to others, the existence of such rights will be disclosed in the Contract Documents.

B. Deleted in its entirety.

C. Deleted in its entirety.

7.09 *Permits*

A. Unless otherwise provided in the Contract Documents, Contractor shall obtain and pay for all construction permits, licenses, and certificates of occupancy. Owner shall assist Contractor, when necessary, in obtaining such permits and licenses. Contractor shall pay all governmental charges and inspection fees necessary for the prosecution of the Work which are applicable at the time of the submission of Contractor's Bid (or when Contractor became bound under a negotiated contract). Owner shall pay all charges of utility owners for connections for providing permanent service to the Work.

7.10 *Taxes*

A. Contractor shall pay all sales, consumer, use, and other similar taxes required to be paid by Contractor in accordance with the Laws and Regulations of the place of the Project which are applicable during the performance of the Work.

7.11 *Laws and Regulations*

A. Contractor shall give all notices required by and shall comply with all Laws and Regulations applicable to the performance of the Work. Neither Owner nor Engineer shall be responsible for monitoring Contractor's compliance with any Laws or Regulations.

Copyright© 2018 National Society of Professional Engineers, American Council of Engineering Companies, and American Society of Civil Engineers. All rights reserved.

B. If Contractor performs any Work or takes any other action knowing or having reason to know that it is contrary to Laws or Regulations, Contractor shall bear all resulting costs and losses, and shall indemnify and hold harmless Owner and Engineer, and the officers, directors, members, partners, employees, agents, consultants, and subcontractors of each and any of them, from and against all claims, costs, losses, and damages (including but not limited to all fees and charges of engineers, architects, attorneys, and other professionals and all court or arbitration or other dispute resolution costs) arising out of or relating to such Work or other action. It is not Contractor's responsibility to make certain that the Work described in the Contract Documents is in accordance with Laws and Regulations, but this does not relieve Contractor of its obligations under Paragraph 3.03.

C. Owner or Contractor may give written notice to the other party of any changes after the submission of Contractor's Bid (or after the date when Contractor became bound under a negotiated contract) in Laws or Regulations having an effect on the cost or time of performance of the Work, including but not limited to changes in Laws or Regulations having an effect on procuring permits and on sales, use, value-added, consumption, and other similar taxes. If Owner and Contractor are unable to agree on entitlement to or on the amount or extent, if any, of any adjustment in Contract Price or Contract Times resulting from such changes, then within 30 days of such written notice Contractor may submit a Change Proposal, or Owner may initiate a Claim.

7.12 *Record Documents*

A. Contractor shall maintain in a safe place at the Site one printed record copy of all Drawings, Specifications, Addenda, Change Orders, Work Change Directives, Field Orders, written interpretations and clarifications, and approved Shop Drawings. Contractor shall keep such record documents in good order and annotate them to show changes made during construction. These record documents, together with all approved Samples, will be available to Engineer for reference. Upon completion of the Work, Contractor shall deliver these record documents to Engineer.

7.13 *Safety and Protection*

A. Contractor shall be solely responsible for initiating, maintaining, and supervising all safety precautions and programs in connection with the Work. Such responsibility does not relieve Subcontractors of their responsibility for the safety of persons or property in the performance of their work, nor for compliance with applicable safety Laws and Regulations.

B. Contractor shall designate a qualified and experienced safety representative whose duties and responsibilities are the prevention of Work-related accidents and the maintenance and supervision of safety precautions and programs.

C. Contractor shall take all necessary precautions for the safety of, and shall provide the necessary protection to prevent damage, injury, or loss to:

1. all persons on the Site or who may be affected by the Work;

2. all the Work and materials and equipment to be incorporated therein, whether in storage on or off the Site; and

Copyright© 2018 National Society of Professional Engineers, American Council of Engineering Companies, and American Society of Civil Engineers. All rights reserved.

3. other property at the Site or adjacent thereto, including trees, shrubs, lawns, walks, pavements, roadways, structures, other work in progress, utilities, and Underground Facilities not designated for removal, relocation, or replacement in the course of construction.

D. All damage, injury, or loss to any property referred to in Paragraph 7.13.C.2 or 7.13.C.3 caused, directly or indirectly, in whole or in part, by Contractor, any Subcontractor, Supplier, or any other individual or entity directly or indirectly employed by any of them to perform any of the Work, or anyone for whose acts any of them may be liable, shall be remedied by Contractor at its expense (except damage or loss attributable to the fault of Drawings or Specifications or to the acts or omissions of Owner or Engineer or anyone employed by any of them, or anyone for whose acts any of them may be liable, and not attributable, directly or indirectly, in whole or in part, to the fault or negligence of Contractor or any Subcontractor, Supplier, or other individual or entity directly or indirectly employed by any of them).

E. Contractor shall comply with all applicable Laws and Regulations relating to the safety of persons or property, or to the protection of persons or property from damage, injury, or loss; and shall erect and maintain all necessary safeguards for such safety and protection.

F. Contractor shall notify Owner; the owners of adjacent property; the owners of Underground Facilities and other utilities (if the identity of such owners is known to Contractor); and other contractors and utility owners performing work at or adjacent to the Site, in writing, when Contractor knows that prosecution of the Work may affect them, and shall cooperate with them in the protection, removal, relocation, and replacement of their property or work in progress.

G. Contractor shall comply with the applicable requirements of Owner's safety programs, if any. Any Owner's safety programs that are applicable to the Work are identified or included in the Supplementary Conditions or Specifications.

H. Contractor shall inform Owner and Engineer of the specific requirements of Contractor's safety program with which Owner's and Engineer's employees and representatives must comply while at the Site.

I. Contractor's duties and responsibilities for safety and protection will continue until all the Work is completed, Engineer has issued a written notice to Owner and Contractor in accordance with Paragraph 15.06.C that the Work is acceptable, and Contractor has left the Site (except as otherwise expressly provided in connection with Substantial Completion).

J. Contractor's duties and responsibilities for safety and protection will resume whenever Contractor or any Subcontractor or Supplier returns to the Site to fulfill warranty or correction obligations, or to conduct other tasks arising from the Contract Documents.

7.14 *Hazard Communication Programs*

A. Contractor shall be responsible for coordinating any exchange of safety data sheets (formerly known as material safety data sheets) or other hazard communication information required to be made available to or exchanged between or among employers at the Site in accordance with Laws or Regulations.

Copyright© 2018 National Society of Professional Engineers, American Council of Engineering Companies, and American Society of Civil Engineers. All rights reserved.

7.15 *Emergencies*

A. In emergencies affecting the safety or protection of persons or the Work or property at the Site or adjacent thereto, Contractor is obligated to act to prevent damage, injury, or loss. Contractor shall give Engineer prompt written notice if Contractor believes that any significant changes in the Work or variations from the Contract Documents have been caused by an emergency, or are required as a result of Contractor's response to an emergency. If Engineer determines that a change in the Contract Documents is required because of an emergency or Contractor's response, a Work Change Directive or Change Order will be issued.

7.16 *Submittals*

A. *Shop Drawing and Sample Requirements*

1. Before submitting a Shop Drawing or Sample, Contractor shall:

a. review and coordinate the Shop Drawing or Sample with other Shop Drawings and Samples and with the requirements of the Work and the Contract Documents;

b. determine and verify:

1) all field measurements, quantities, dimensions, specified performance and design criteria, installation requirements, materials, catalog numbers, and similar information with respect to the Submittal;

2) the suitability of all materials and equipment offered with respect to the indicated application, fabrication, shipping, handling, storage, assembly, and installation pertaining to the performance of the Work; and

3) all information relative to Contractor's responsibilities for means, methods, techniques, sequences, and procedures of construction, and safety precautions and programs incident thereto;

c. confirm that the Submittal is complete with respect to all related data included in the Submittal.

2. Each Shop Drawing or Sample must bear a stamp or specific written certification that Contractor has satisfied Contractor's obligations under the Contract Documents with respect to Contractor's review of that Submittal, and that Contractor approves the Submittal.

3. With each Shop Drawing or Sample, Contractor shall give Engineer specific written notice of any variations that the Submittal may have from the requirements of the Contract Documents. This notice must be set forth in a written communication separate from the Submittal; and, in addition, in the case of a Shop Drawing by a specific notation made on the Shop Drawing itself.

B. *Submittal Procedures for Shop Drawings and Samples*: Contractor shall label and submit Shop Drawings and Samples to Engineer for review and approval in accordance with the accepted Schedule of Submittals.

1. *Shop Drawings*

a. Contractor shall submit the number of copies required in the Specifications.

Copyright© 2018 National Society of Professional Engineers, American Council of Engineering Companies, and American Society of Civil Engineers. All rights reserved.

b. Data shown on the Shop Drawings must be complete with respect to quantities, dimensions, specified performance and design criteria, materials, and similar data to show Engineer the services, materials, and equipment Contractor proposes to provide, and to enable Engineer to review the information for the limited purposes required by Paragraph 7.16.C.

2. *Samples*

a. Contractor shall submit the number of Samples required in the Specifications.

b. Contractor shall clearly identify each Sample as to material, Supplier, pertinent data such as catalog numbers, the use for which intended and other data as Engineer may require to enable Engineer to review the Submittal for the limited purposes required by Paragraph 7.16.C.

3. Where a Shop Drawing or Sample is required by the Contract Documents or the Schedule of Submittals, any related Work performed prior to Engineer's review and approval of the pertinent submittal will be at the sole expense and responsibility of Contractor.

C. *Engineer's Review of Shop Drawings and Samples*

1. Engineer will provide timely review of Shop Drawings and Samples in accordance with the accepted Schedule of Submittals. Engineer's review and approval will be only to determine if the items covered by the Submittals will, after installation or incorporation in the Work, comply with the requirements of the Contract Documents, and be compatible with the design concept of the completed Project as a functioning whole as indicated by the Contract Documents.

2. Engineer's review and approval will not extend to means, methods, techniques, sequences, or procedures of construction, or to safety precautions or programs incident thereto.

3. Engineer's review and approval of a separate item as such will not indicate approval of the assembly in which the item functions.

4. Engineer's review and approval of a Shop Drawing or Sample will not relieve Contractor from responsibility for any variation from the requirements of the Contract Documents unless Contractor has complied with the requirements of Paragraph 7.16.A.3 and Engineer has given written approval of each such variation by specific written notation thereof incorporated in or accompanying the Shop Drawing or Sample. Engineer will document any such approved variation from the requirements of the Contract Documents in a Field Order or other appropriate Contract modification.

5. Engineer's review and approval of a Shop Drawing or Sample will not relieve Contractor from responsibility for complying with the requirements of Paragraphs 7.16.A and B.

6. Engineer's review and approval of a Shop Drawing or Sample, or of a variation from the requirements of the Contract Documents, will not, under any circumstances, change the Contract Times or Contract Price, unless such changes are included in a Change Order.

7. Neither Engineer's receipt, review, acceptance, or approval of a Shop Drawing or Sample will result in such item becoming a Contract Document.

Copyright© 2018 National Society of Professional Engineers, American Council of Engineering Companies, and American Society of Civil Engineers. All rights reserved.

8. Contractor shall perform the Work in compliance with the requirements and commitments set forth in approved Shop Drawings and Samples, subject to the provisions of Paragraph 7.16.C.4.

D. *Resubmittal Procedures for Shop Drawings and Samples*

1. Contractor shall make corrections required by Engineer and shall return the required number of corrected copies of Shop Drawings and submit, as required, new Samples for review and approval. Contractor shall direct specific attention in writing to revisions other than the corrections called for by Engineer on previous Submittals.

2. Contractor shall furnish required Shop Drawing and Sample submittals with sufficient information and accuracy to obtain required approval of an item with no more than two resubmittals. Engineer will record Engineer's time for reviewing a third or subsequent resubmittal of a Shop Drawing or Sample, and Contractor shall be responsible for Engineer's charges to Owner for such time. Owner may impose a set-off against payments due Contractor to secure reimbursement for such charges.

3. If Contractor requests a change of a previously approved Shop Drawing or Sample, Contractor shall be responsible for Engineer's charges to Owner for its review time, and Owner may impose a set-off against payments due Contractor to secure reimbursement for such charges, unless the need for such change is beyond the control of Contractor.

E. *Submittals Other than Shop Drawings, Samples, and Owner-Delegated Designs*

1. The following provisions apply to all Submittals other than Shop Drawings, Samples, and Owner-delegated designs:

a. Contractor shall submit all such Submittals to the Engineer in accordance with the Schedule of Submittals and pursuant to the applicable terms of the Contract Documents.

b. Engineer will provide timely review of all such Submittals in accordance with the Schedule of Submittals and return such Submittals with a notation of either Accepted or Not Accepted. Any such Submittal that is not returned within the time established in the Schedule of Submittals will be deemed accepted.

c. Engineer's review will be only to determine if the Submittal is acceptable under the requirements of the Contract Documents as to general form and content of the Submittal.

d. If any such Submittal is not accepted, Contractor shall confer with Engineer regarding the reason for the non-acceptance, and resubmit an acceptable document.

2. Procedures for the submittal and acceptance of the Progress Schedule, the Schedule of Submittals, and the Schedule of Values are set forth in Paragraphs 2.03. 2.04, and 2.05.

F. Owner-delegated Designs: Submittals pursuant to Owner-delegated designs are governed by the provisions of Paragraph 7.19.

Copyright© 2018 National Society of Professional Engineers, American Council of Engineering Companies, and American Society of Civil Engineers. All rights reserved.

7.17 *Contractor's General Warranty and Guarantee*

A. Contractor warrants and guarantees to Owner that all Work will be in accordance with the Contract Documents and will not be defective. Engineer is entitled to rely on Contractor's warranty and guarantee.

B. Owner's rights under this warranty and guarantee are in addition to, and are not limited by, Owner's rights under the correction period provisions of Paragraph 15.08. The time in which Owner may enforce its warranty and guarantee rights under this Paragraph 7.17 is limited only by applicable Laws and Regulations restricting actions to enforce such rights; provided, however, that after the end of the correction period under Paragraph 15.08:

1. Owner shall give Contractor written notice of any defective Work within 60 days of the discovery that such Work is defective; and

2. Such notice will be deemed the start of an event giving rise to a Claim under Paragraph 12.01.B, such that any related Claim must be brought within 30 days of the notice.

C. Contractor's warranty and guarantee hereunder excludes defects or damage caused by:

1. abuse, or improper modification, maintenance, or operation, by persons other than Contractor, Subcontractors, Suppliers, or any other individual or entity for whom Contractor is responsible; or

2. normal wear and tear under normal usage.

D. Contractor's obligation to perform and complete the Work in accordance with the Contract Documents is absolute. None of the following will constitute an acceptance of Work that is not in accordance with the Contract Documents, a release of Contractor's obligation to perform the Work in accordance with the Contract Documents, or a release of Owner's warranty and guarantee rights under this Paragraph 7.17:

1. Observations by Engineer;

2. Recommendation by Engineer or payment by Owner of any progress or final payment;

3. The issuance of a certificate of Substantial Completion by Engineer or any payment related thereto by Owner;

4. Use or occupancy of the Work or any part thereof by Owner;

5. Any review and approval of a Shop Drawing or Sample submittal;

6. The issuance of a notice of acceptability by Engineer;

7. The end of the correction period established in Paragraph 15.08;

8. Any inspection, test, or approval by others; or

9. Any correction of defective Work by Owner.

E. If the Contract requires the Contractor to accept the assignment of a contract entered into by Owner, then the specific warranties, guarantees, and correction obligations contained in the assigned contract will govern with respect to Contractor's performance obligations to Owner for the Work described in the assigned contract.

Copyright© 2018 National Society of Professional Engineers, American Council of Engineering Companies, and American Society of Civil Engineers. All rights reserved.

7.18 *Indemnification*

A.

To the extent provided by law, Contractor shall indemnify, defend, and hold harmless the Owner and the State of Florida, Department of Transportation, including the Department's officers, agents, and employees, against any actions, claims, or damages arising out of, relating to, or resulting from negligent or wrongful act(s) of Contractor, or any of its officers, agents, or employees, acting within the scope of their office or employment, in connection with the rights granted to or exercised by Contractor.

The foregoing indemnification shall not constitute a waiver of the Department's or Owner's sovereign immunity beyond the limits set forth in Florida Statutes, Section 768.28. Nor shall the same be construed to constitute agreement by Contractor to indemnify City for the negligent acts or omissions of Owner, its officers, agents, or employees, or third parties. Nor shall the same be construed to constitute agreement by Contractor to indemnify the Department for the negligent acts or omissions of the Department, its officers, agents, or employees, or third parties. This indemnification shall survive the termination of this Agreement.

B. The Contractor acknowledges the limit of dollar amount of Contractor's indemnity obligations required by the Contract specifically for those claims caused in whole or in part by the Owner or Engineer shall be $1,000,000 or the Contract Sum of the Project, whichever is more. The parties agree that the indemnity provided herein bears a reasonable commercial relationship to the Contract and is incorporated by this reference into the Project specifications and bid documents. if any.

C. Notwithstanding the above and without monetary limitation, the Contractor hereby indemnifies and holds harmless the Owner, their officers and employees, from liabilities, damages, losses and costs, including, but not limited to, reasonable attorney's fees, to the extent caused by negligence, recklessness, or intentional wrongful misconduct of the Contractor and persons employed or utilized by the Contractor in the performance of the Contract.

D. Contractor agrees and understands that its obligation to indemnify, hold harmless, and defend as set forth in Paragraphs 7.18.A and B. above includes without limitation, claims, losses, etc., for personal injury, death, property damage, Hazardous Environmental Conditions, infringement of patent rights or copyrights incidental to the use or incorporation in the performance of the Work, etc., to the extent caused by the negligence, recklessness, or intentional misconduct of Contractor and the persons or entities employed or utilized by Contractor in the performance of the Contract.

Copyright© 2018 National Society of Professional Engineers, American Council of Engineering Companies, and American Society of Civil Engineers. All rights reserved.

7.19 *Delegation of Professional Design Services*

A. Owner may require Contractor to provide professional design services for a portion of the Work by express delegation in the Contract Documents. Such delegation will specify the performance and design criteria that such services must satisfy, and the Submittals that Contractor must furnish to Engineer with respect to the Owner-delegated design.

B. Contractor shall cause such Owner-delegated professional design services to be provided pursuant to the professional standard of care by a properly licensed design professional, whose signature and seal must appear on all drawings, calculations, specifications, certifications, and Submittals prepared by such design professional. Such design professional must issue all certifications of design required by Laws and Regulations.

C. If a Shop Drawing or other Submittal related to the Owner-delegated design is prepared by Contractor, a Subcontractor, or others for submittal to Engineer, then such Shop Drawing or other Submittal must bear the written approval of Contractor's design professional when submitted by Contractor to Engineer.

D. Owner and Engineer shall be entitled to rely upon the adequacy, accuracy, and completeness of the services, certifications, and approvals performed or provided by the design professionals retained or employed by Contractor under an Owner-delegated design, subject to the professional standard of care and the performance and design criteria stated in the Contract Documents.

E. Pursuant to this Paragraph 7.19, Engineer's review, approval, and other determinations regarding design drawings, calculations, specifications, certifications, and other Submittals furnished by Contractor pursuant to an Owner-delegated design will be only for the following limited purposes:

1. Checking for conformance with the requirements of this Paragraph 7.19;

2. Confirming that Contractor (through its design professionals) has used the performance and design criteria specified in the Contract Documents; and

3. Establishing that the design furnished by Contractor is consistent with the design concept expressed in the Contract Documents.

F. Contractor shall not be responsible for the adequacy of performance or design criteria specified by Owner or Engineer.

G. Contractor is not required to provide professional services in violation of applicable Laws and Regulations.

ARTICLE 8—OTHER WORK AT THE SITE

8.01 *Other Work*

A. In addition to and apart from the Work under the Contract Documents, the Owner may perform other work at or adjacent to the Site. Such other work may be performed by Owner's employees, or through contracts between the Owner and third parties. Owner may also arrange to have third-party utility owners perform work on their utilities and facilities at or adjacent to the Site.

Copyright© 2018 National Society of Professional Engineers, American Council of Engineering Companies, and American Society of Civil Engineers. All rights reserved.

B. If Owner performs other work at or adjacent to the Site with Owner's employees, or through contracts for such other work, then Owner shall give Contractor written notice thereof prior to starting any such other work. If Owner has advance information regarding the start of any third-party utility work that Owner has arranged to take place at or adjacent to the Site, Owner shall provide such information to Contractor.

C. Contractor shall afford proper and safe access to the Site to each contractor that performs such other work, each utility owner performing other work, and Owner, if Owner is performing other work with Owner's employees, and provide a reasonable opportunity for the introduction and storage of materials and equipment and the execution of such other work.

D. Contractor shall do all cutting, fitting, and patching of the Work that may be required to properly connect or otherwise make its several parts come together and properly integrate with such other work. Contractor shall not endanger any work of others by cutting, excavating, or otherwise altering such work; provided, however, that Contractor may cut or alter others' work with the written consent of Engineer and the others whose work will be affected.

E. If the proper execution or results of any part of Contractor's Work depends upon work performed by others, Contractor shall inspect such other work and promptly report to Engineer in writing any delays, defects, or deficiencies in such other work that render it unavailable or unsuitable for the proper execution and results of Contractor's Work. Contractor's failure to so report will constitute an acceptance of such other work as fit and proper for integration with Contractor's Work except for latent defects and deficiencies in such other work.

F. The provisions of this article are not applicable to work that is performed by third-party utilities or other third-party entities without a contract with Owner, or that is performed without having been arranged by Owner. If such work occurs, then any related delay, disruption, or interference incurred by Contractor is governed by the provisions of Paragraph 4.05.C.3.

8.02 *Coordination*

A. If Owner intends to contract with others for the performance of other work at or adjacent to the Site, to perform other work at or adjacent to the Site with Owner's employees, or to arrange to have utility owners perform work at or adjacent to the Site, the following will be set forth in the Supplementary Conditions or provided to Contractor prior to the start of any such other work:

1. The identity of the individual or entity that will have authority and responsibility for coordination of the activities among the various contractors;

2. An itemization of the specific matters to be covered by such authority and responsibility; and

3. The extent of such authority and responsibilities.

B. Unless otherwise provided in the Supplementary Conditions, Owner shall have sole authority and responsibility for such coordination.

Copyright© 2018 National Society of Professional Engineers, American Council of Engineering Companies, and American Society of Civil Engineers. All rights reserved.

8.03 *Legal Relationships*

A. If, in the course of performing other work for Owner at or adjacent to the Site, the Owner's employees, any other contractor working for Owner, or any utility owner that Owner has arranged to perform work, causes damage to the Work or to the property of Contractor or its Subcontractors, or delays, disrupts, interferes with, or increases the scope or cost of the performance of the Work, through actions or inaction, then Contractor shall be entitled to an equitable adjustment in the Contract Price or the Contract Times. Contractor must submit any Change Proposal seeking an equitable adjustment in the Contract Price or the Contract Times under this paragraph within 30 days of the damaging, delaying, disrupting, or interfering event. The entitlement to, and extent of, any such equitable adjustment will take into account information (if any) regarding such other work that was provided to Contractor in the Contract Documents prior to the submittal of the Bid or the final negotiation of the terms of the Contract, and any remedies available to Contractor under Laws or Regulations concerning utility action or inaction. When applicable, any such equitable adjustment in Contract Price will be conditioned on Contractor assigning to Owner all Contractor's rights against such other contractor or utility owner with respect to the damage, delay, disruption, or interference that is the subject of the adjustment. Contractor's entitlement to an adjustment of the Contract Times or Contract Price is subject to the provisions of Paragraphs 4.05.D and 4.05.E.

B. Contractor shall take reasonable and customary measures to avoid damaging, delaying, disrupting, or interfering with the work of Owner, any other contractor, or any utility owner performing other work at or adjacent to the Site.

   1. If Contractor fails to take such measures and as a result damages, delays, disrupts, or interferes with the work of any such other contractor or utility owner, then Owner may impose a set-off against payments due Contractor, and assign to such other contractor or utility owner the Owner's contractual rights against Contractor with respect to the breach of the obligations set forth in this Paragraph 8.03.B.

   2. When Owner is performing other work at or adjacent to the Site with Owner's employees, Contractor shall be liable to Owner for damage to such other work, and for the reasonable direct delay, disruption, and interference costs incurred by Owner as a result of Contractor's failure to take reasonable and customary measures with respect to Owner's other work. In response to such damage, delay, disruption, or interference, Owner may impose a set-off against payments due Contractor.

C. If Contractor damages, delays, disrupts, or interferes with the work of any other contractor, or any utility owner performing other work at or adjacent to the Site, through Contractor's failure to take reasonable and customary measures to avoid such impacts, or if any claim arising out of Contractor's actions, inactions, or negligence in performance of the Work at or adjacent to the Site is made by any such other contractor or utility owner against Contractor, Owner, or Engineer, then Contractor shall (1) promptly attempt to settle the claim as to all parties through negotiations with such other contractor or utility owner, or otherwise resolve the claim by arbitration or other dispute resolution proceeding or at law, and (2) indemnify and hold harmless Owner and Engineer, and the officers, directors, members, partners, employees, agents, consultants and subcontractors of each and any of them from and against any such claims, and against all costs, losses, and damages (including but not limited to all

Copyright© 2018 National Society of Professional Engineers, American Council of Engineering Companies, and American Society of Civil Engineers. All rights reserved.

fees and charges of engineers, architects, attorneys, and other professionals and all court or arbitration or other dispute resolution costs) arising out of or relating to such damage, delay, disruption, or interference.

ARTICLE 9—OWNER'S RESPONSIBILITIES

9.01 *Communications to Contractor*

A. Except as otherwise provided in these General Conditions, Owner shall issue all communications to Contractor through Engineer.

9.02 *Replacement of Engineer*

A. Owner may at its discretion appoint an engineer to replace Engineer, provided Contractor makes no reasonable objection to the replacement engineer. The replacement engineer's status under the Contract Documents will be that of the former Engineer.

9.03 *Furnish Data*

A. Owner shall promptly furnish the data required of Owner under the Contract Documents.

9.04 *Pay When Due*

A. Owner shall make payments to Contractor when they are due as provided in the Agreement.

9.05 *Lands and Easements; Reports, Tests, and Drawings*

A. Owner's duties with respect to providing lands and easements are set forth in Paragraph 5.01.

B. Owner's duties with respect to providing engineering surveys to establish reference points are set forth in Paragraph 4.03.

C. Article 5 refers to Owner's identifying and making available to Contractor copies of reports of explorations and tests of conditions at the Site, and drawings of physical conditions relating to existing surface or subsurface structures at the Site.

9.06 *Insurance*

A. Owner's responsibilities, if any, with respect to purchasing and maintaining liability and property insurance are set forth in Article 6.

9.07 *Change Orders*

A. Owner's responsibilities with respect to Change Orders are set forth in Article 11.

9.08 *Inspections, Tests, and Approvals*

A. Owner's responsibility with respect to certain inspections, tests, and approvals is set forth in Paragraph 14.02.B.

9.09 *Limitations on Owner's Responsibilities*

A. The Owner shall not supervise, direct, or have control or authority over, nor be responsible for, Contractor's means, methods, techniques, sequences, or procedures of construction, or the safety precautions and programs incident thereto, or for any failure of Contractor to comply with Laws and Regulations applicable to the performance of the Work. Owner will not

Copyright© 2018 National Society of Professional Engineers, American Council of Engineering Companies, and American Society of Civil Engineers. All rights reserved.

be responsible for Contractor's failure to perform the Work in accordance with the Contract Documents.

9.10 *Undisclosed Hazardous Environmental Condition*

A. Owner's responsibility in respect to an undisclosed Hazardous Environmental Condition is set forth in Paragraph 5.06.

9.11 *Deleted in its entirety.*

A. Deleted in its entirety. N/A

9.12 *Safety Programs*

A. While at the Site, Owner's employees and representatives shall comply with the specific applicable requirements of Contractor's safety programs of which Owner has been informed.

B. Owner shall furnish copies of any applicable Owner safety programs to Contractor.

ARTICLE 10—ENGINEER'S STATUS DURING CONSTRUCTION

10.01 *Owner's Representative*

A. Engineer will be Owner's representative during the construction period. The duties and responsibilities and the limitations of authority of Engineer as Owner's representative during construction are set forth in the Contract.

10.02 *Visits to Site*

A. Engineer will make visits to the Site at intervals appropriate to the various stages of construction as Engineer deems necessary in order to observe, as an experienced and qualified design professional, the progress that has been made and the quality of the various aspects of Contractor's executed Work. Based on information obtained during such visits and observations, Engineer, for the benefit of Owner, will determine, in general, if the Work is proceeding in accordance with the Contract Documents. Engineer will not be required to make exhaustive or continuous inspections on the Site to check the quality or quantity of the Work. Engineer's efforts will be directed toward providing for Owner a greater degree of confidence that the completed Work will conform generally to the Contract Documents. On the basis of such visits and observations, Engineer will keep Owner informed of the progress of the Work and will endeavor to guard Owner against defective Work.

B. Engineer's visits and observations are subject to all the limitations on Engineer's authority and responsibility set forth in Paragraph 10.07. Particularly, but without limitation, during or as a result of Engineer's visits or observations of Contractor's Work, Engineer will not supervise, direct, control, or have authority over or be responsible for Contractor's means, methods, techniques, sequences, or procedures of construction, or the safety precautions and programs incident thereto, or for any failure of Contractor to comply with Laws and Regulations applicable to the performance of the Work.

10.03 *Resident Project Representative*

A. If Owner and Engineer have agreed that Engineer will furnish a Resident Project Representative to represent Engineer at the Site and assist Engineer in observing the progress

Copyright© 2018 National Society of Professional Engineers, American Council of Engineering Companies, and American Society of Civil Engineers. All rights reserved.

and quality of the Work, then the authority and responsibilities of any such Resident Project Representative will be as provided in the Supplementary Conditions, and limitations on the responsibilities thereof will be as provided in the Supplementary Conditions and in Paragraph 10.07.

B. If Owner designates an individual or entity who is not Engineer's consultant, agent, or employee to represent Owner at the Site, then the responsibilities and authority of such individual or entity will be as provided in the Supplementary Conditions.

10.04 *Engineer's Authority*

A. Engineer has the authority to reject Work in accordance with Article 14.

B. Engineer's authority as to Submittals is set forth in Paragraph 7.16.

C. Engineer's authority as to design drawings, calculations, specifications, certifications and other Submittals from Contractor in response to Owner's delegation (if any) to Contractor of professional design services, is set forth in Paragraph 7.19.

D. Engineer's authority as to changes in the Work is set forth in Article 11.

E. Engineer's authority as to Applications for Payment is set forth in Article 15.

10.05 *Determinations for Unit Price Work*

A. Engineer will determine the actual quantities and classifications of Unit Price Work performed by Contractor as set forth in Paragraph 13.03.

10.06 *Decisions on Requirements of Contract Documents and Acceptability of Work*

A. Engineer will render decisions regarding the requirements of the Contract Documents, and judge the acceptability of the Work, pursuant to the specific procedures set forth herein for initial interpretations, Change Proposals, and acceptance of the Work. In rendering such decisions and judgments, Engineer will not show partiality to Owner or Contractor, and will not be liable to Owner, Contractor, or others in connection with any proceedings, interpretations, decisions, or judgments conducted or rendered in good faith.

10.07 *Limitations on Engineer's Authority and Responsibilities*

A. Neither Engineer's authority or responsibility under this Article 10 or under any other provision of the Contract, nor any decision made by Engineer in good faith either to exercise or not exercise such authority or responsibility or the undertaking, exercise, or performance of any authority or responsibility by Engineer, will create, impose, or give rise to any duty in contract, tort, or otherwise owed by Engineer to Contractor, any Subcontractor, any Supplier, any other individual or entity, or to any surety for or employee or agent of any of them.

B. Engineer will not supervise, direct, control, or have authority over or be responsible for Contractor's means, methods, techniques, sequences, or procedures of construction, or the safety precautions and programs incident thereto, or for any failure of Contractor to comply with Laws and Regulations applicable to the performance of the Work. Engineer will not be responsible for Contractor's failure to perform the Work in accordance with the Contract Documents.

Copyright© 2018 National Society of Professional Engineers, American Council of Engineering Companies, and American Society of Civil Engineers. All rights reserved.

C. Engineer will not be responsible for the acts or omissions of Contractor or of any Subcontractor, any Supplier, or of any other individual or entity performing any of the Work.

D. Engineer's review of the final Application for Payment and accompanying documentation, and all maintenance and operating instructions, schedules, guarantees, bonds, certificates of inspection, tests and approvals, and other documentation required to be delivered by Contractor under Paragraph 15.06.A, will only be to determine generally that their content complies with the requirements of, and in the case of certificates of inspections, tests, and approvals, that the results certified indicate compliance with the Contract Documents.

E. The limitations upon authority and responsibility set forth in this Paragraph 10.07 also apply to the Resident Project Representative, if any.

10.08 *Compliance with Safety Program*

A. While at the Site, Engineer's employees and representatives will comply with the specific applicable requirements of Owner's and Contractor's safety programs of which Engineer has been informed.

ARTICLE 11—CHANGES TO THE CONTRACT

11.01 *Amending and Supplementing the Contract*

A. The Contract may be amended or supplemented by a Change Order, an Emergency Work Change Directive, or a Field Order.

B. If an amendment or supplement to the Contract includes a change in the Contract Price or the Contract Times, such amendment or supplement must be set forth in a Change Order.

C. All changes to the Contract that involve (1) the performance or acceptability of the Work, (2) the design (as set forth in the Drawings, Specifications, or otherwise), or (3) other engineering or technical matters, must be supported by Engineer's recommendation. Owner and Contractor may amend other terms and conditions of the Contract without the recommendation of the Engineer.

11.02 *Change Orders*

A. Owner and Contractor shall execute appropriate Change Orders covering:

1. Changes in Contract Price or Contract Times which are agreed to by the parties, including any undisputed sum or amount of time for Work actually performed in accordance with an Emergency Work Change Directive;

2. Changes in Contract Price resulting from an Owner set-off, unless Contractor has duly contested such set-off;

3. Changes in the Work which are: (a) ordered by Owner pursuant to Paragraph 11.05, (b) required because of Owner's acceptance of defective Work under Paragraph 14.04 or Owner's correction of defective Work under Paragraph 14.07, or (c) agreed to by the parties, subject to the need for Engineer's recommendation if the change in the Work involves the design (as set forth in the Drawings, Specifications, or otherwise) or other engineering or technical matters; and

Copyright© 2018 National Society of Professional Engineers, American Council of Engineering Companies, and American Society of Civil Engineers. All rights reserved.

4. Changes that embody the substance of any final and binding results under: Paragraph 11.03.B, resolving the impact of an Emergency Work Change Directive; Paragraph 11.09, concerning Change Proposals; Article 12, Claims; Paragraph 13.02.D, final adjustments resulting from allowances; Paragraph 13.03.D, final adjustments relating to determination of quantities for Unit Price Work; and similar provisions.

B. If Owner or Contractor refuses to execute a Change Order that is required to be executed under the terms of Paragraph 11.02.A, it will be deemed to be of full force and effect, as if fully executed.

11.03 Emergency *Work Change Directives*

A. An Emergency Work Change Directive may only be used in emergency situations and will not change the Contract Price or the Contract Times but is evidence that the parties expect that the modification documented by an Emergency Work Change Directive will be incorporated in a subsequently issued Change Order, following negotiations by the parties as to the Emergency Work Change Directive's effect, if any, on the Contract Price and Contract Times; or, if negotiations are unsuccessful, by a determination under the terms of the Contract Documents governing adjustments, expressly including Paragraph 11.07 regarding change of Contract Price.

B. If Owner has issued a written Emergency Work Change Directive and:

1. Contractor believes that an adjustment in Contract Times or Contract Price is necessary, then Contractor shall submit any Change Proposal seeking such an adjustment no later than 30 days after the completion of the Work set out in the Work Change Directive.

2. Owner believes that an adjustment in Contract Times or Contract Price is necessary, then Owner shall submit a Change Order including an adjustment no later than 60 days after issuance of the Work Change Directive.

11.04 *Field Orders*

A. Engineer may authorize minor changes in the Work if the changes do not involve an adjustment in the Contract Price or the Contract Times and are compatible with the design concept of the completed Project as a functioning whole as indicated by the Contract Documents. Such changes will be accomplished by a Field Order and will be binding on Owner and also on Contractor, which shall perform the Work involved promptly.

B. If Contractor believes that a Field Order justifies an adjustment in the Contract Price or Contract Times, then before proceeding with the Work at issue, Contractor shall submit a Change Proposal as provided herein.

11.05 *Owner-Authorized Changes in the Work*

A. Without invalidating the Contract and without notice to any surety, Owner may, at any time or from time to time, order additions, deletions, or revisions in the Work. Changes involving the design (as set forth in the Drawings, Specifications, or otherwise) or other engineering or technical matters will be supported by Engineer's recommendation.

B. Such changes in the Work may be accomplished by a Change Order, if Owner and Contractor have agreed as to the effect, if any, of the changes on Contract Times or Contract Price; or by

Copyright© 2018 National Society of Professional Engineers, American Council of Engineering Companies, and American Society of Civil Engineers. All rights reserved.

a Work Change Directive. Upon receipt of any such document, Contractor shall promptly proceed with the Work involved; or, in the case of a deletion in the Work, promptly cease construction activities with respect to such deleted Work. Added or revised Work must be performed under the applicable conditions of the Contract Documents.

C. Nothing in this Paragraph 11.05 obligates Contractor to undertake work that Contractor reasonably concludes cannot be performed in a manner consistent with Contractor's safety obligations under the Contract Documents or Laws and Regulations.

11.06 *Unauthorized Changes in the Work*

A. Contractor shall not be entitled to an increase in the Contract Price or an extension of the Contract Times with respect to any work performed that is not required by the Contract Documents, as amended, modified, or supplemented, except in the case of an emergency as provided in Paragraph 7.15 or in the case of uncovering Work as provided in Paragraph 14.05.C.2.

11.07 *Change of Contract Price*

A. The Contract Price may only be changed by a Change Order. Any Change Proposal for an adjustment in the Contract Price must comply with the provisions of Paragraph 11.09. Any Claim for an adjustment of Contract Price must comply with the provisions of Article 12.

B. An adjustment in the Contract Price will be determined as follows:

1. Where the Work involved is covered by unit prices contained in the Contract Documents, then by application of such unit prices to the quantities of the items involved (subject to the provisions of Paragraph 13.03);

2. Where the Work involved is not covered by unit prices contained in the Contract Documents, then by a mutually agreed lump sum (which may include an allowance for overhead and profit not necessarily in accordance with Paragraph 11.07.C.2); or

3. Where the Work involved is not covered by unit prices contained in the Contract Documents and the parties do not reach mutual agreement to a lump sum, then on the basis of the Cost of the Work (determined as provided in Paragraph 13.01) plus a Contractor's fee for overhead and profit (determined as provided in Paragraph 11.07.C).

C. *Contractor's Fee*: When applicable, the Contractor's fee for overhead and profit will be determined as follows:

1. A mutually acceptable fixed fee; or

2. If a fixed fee is not agreed upon, then a fee based on the following percentages of the various portions of the Cost of the Work:

a. For costs incurred under Paragraphs 13.01.B.1 and 13.01.B.2, the Contractor's fee will be 15 percent;

b. For costs incurred under Paragraph 13.01.B.3, the Contractor's fee will be 5 percent;

c. Where one or more tiers of subcontracts are on the basis of Cost of the Work plus a fee and no fixed fee is agreed upon, the intent of Paragraphs 11.07.C.2.a and 11.07.C.2.b is that the Contractor's fee will be based on: (1) a fee of 15 percent of the

Copyright© 2018 National Society of Professional Engineers, American Council of Engineering Companies, and American Society of Civil Engineers. All rights reserved.

costs incurred under Paragraphs 13.01.B.1 and 13.01.B.2 by the Subcontractor that actually performs the Work, at whatever tier, and (2) with respect to Contractor itself and to any Subcontractors of a tier higher than that of the Subcontractor that actually performs the Work, a fee of 5 percent of the amount (fee plus underlying costs incurred) attributable to the next lower tier Subcontractor; provided, however, that for any such subcontracted Work the maximum total fee to be paid by Owner will be no greater than 27 percent of the costs incurred by the Subcontractor that actually performs the Work;

d. No fee will be payable on the basis of costs itemized under Paragraphs 13.01.B.4, 13.01.B.5, and 13.01.C;

e. The amount of credit to be allowed by Contractor to Owner for any change which results in a net decrease in Cost of the Work will be the amount of the actual net decrease in Cost of the Work and a deduction of an additional amount equal to 5 percent of such actual net decrease in Cost of the Work; and

f. When both additions and credits are involved in any one change or Change Proposal, the adjustment in Contractor's fee will be computed by determining the sum of the costs in each of the cost categories in Paragraph 13.01.B (specifically, payroll costs, Paragraph 13.01.B.1; incorporated materials and equipment costs, Paragraph 13.01.B.2; Subcontract costs, Paragraph 13.01.B.3; special consultants costs, Paragraph 13.01.B.4; and other costs, Paragraph 13.01.B.5) and applying to each such cost category sum the appropriate fee from Paragraphs 11.07.C.2.a through 11.07.C.2.e, inclusive.

g. This paragraph is supplemented by 23 CFR 635.109, and any conflict herewith, the 23 CFR 635.109 shall prevail.

11.08 *Change of Contract Times*

A. The Contract Times may only be changed by a Change Order. Any Change Proposal for an adjustment in the Contract Times must comply with the provisions of Paragraph 11.09. Any Claim for an adjustment in the Contract Times must comply with the provisions of Article 12.

B. Delay, disruption, and interference in the Work, and any related changes in Contract Times, are addressed in and governed by Paragraph 4.05.

11.09 *Change Proposals*

A. *Purpose and Content*: Contractor shall submit a Change Proposal to Engineer to request an adjustment in the Contract Times or Contract Price; contest an initial decision by Engineer concerning the requirements of the Contract Documents or relating to the acceptability of the Work under the Contract Documents; challenge a set-off against payment due; or seek other relief under the Contract. The Change Proposal will specify any proposed change in Contract Times or Contract Price, or other proposed relief, and explain the reason for the proposed change, with citations to any governing or applicable provisions of the Contract Documents. Each Change Proposal will address only one issue, or a set of closely related issues.

Copyright© 2018 National Society of Professional Engineers, American Council of Engineering Companies, and American Society of Civil Engineers. All rights reserved.

B. *Change Proposal Procedures*

1. *Submittal*: Contractor shall submit each Change Proposal to Engineer within 30 days after the start of the event giving rise thereto, or after such initial decision.

2. *Supporting Data*: The Contractor shall submit supporting data, including the proposed change in Contract Price or Contract Time (if any), to the Engineer and Owner within 15 days after the submittal of the Change Proposal.

    a. Change Proposals based on or related to delay, interruption, or interference must comply with the provisions of Paragraphs 4.05.D and 4.05.E.

    b. Change proposals related to a change of Contract Price must include full and detailed accounts of materials incorporated into the Work and labor and equipment used for the subject Work.

    The supporting data must be accompanied by a written statement that the supporting data are accurate and complete, and that any requested time or price adjustment is the entire adjustment to which Contractor believes it is entitled as a result of said event.

3. *Engineer's Initial Review*: Engineer will advise Owner regarding the Change Proposal, and consider any comments or response from Owner regarding the Change Proposal. If in its discretion Engineer concludes that additional supporting data is needed before conducting a full review and making a recommendation regarding the Change Proposal, then Engineer may request that Contractor submit such additional supporting data by a date specified by Engineer, prior to Engineer beginning its full review of the Change Proposal.

4. *Engineer's Full Review and Recommendation on the Change Proposal*: Upon receipt of Contractor's supporting data (including any additional data requested by Engineer), Engineer will conduct a full review of each Change Proposal and, within 30 days after such receipt of the Contractor's supporting data, either recommend approval of the Change Proposal in whole, deny it in whole, or approve it in part and deny it in part. Such actions must be in writing, with a copy provided to Owner and Contractor. If Engineer does not take action on the Change Proposal within 30 days, then either Owner or Contractor may at any time thereafter submit a letter to the other party indicating that as a result of Engineer's inaction the Change Proposal is deemed denied, thereby commencing the time for appeal of the denial under Article 12.

5. *Binding Decision*: Engineer's recommendation is sent to the Owner who shall render a final decision. The Owner's decision is final and binding upon Contractor, unless Contractor appeals the decision by filing a Claim under Article 12.

C. *Resolution of Certain Change Proposals*: If the Change Proposal does not involve the design (as set forth in the Drawings, Specifications, or otherwise), the acceptability of the Work, or other engineering or technical matters, then Engineer will notify the parties in writing that the Engineer is unable to resolve the Change Proposal. For purposes of further resolution of such a Change Proposal, such notice will be deemed a denial, and Contractor may choose to seek resolution under the terms of Article 12.

Copyright© 2018 National Society of Professional Engineers, American Council of Engineering Companies, and American Society of Civil Engineers. All rights reserved.

D. *Post-Completion*: Contractor shall not submit any Change Proposals after Engineer issues a written recommendation of final payment pursuant to Paragraph 15.06.B.

11.10 *Notification to Surety*

A. If the provisions of any bond require notice to be given to a surety of any change affecting the general scope of the Work or the provisions of the Contract Documents (including, but not limited to, Contract Price or Contract Times), the giving of any such notice will be Contractor's responsibility. The amount of each applicable bond will be adjusted to reflect the effect of any such change.

ARTICLE 12—CLAIMS - DELETED IN ITS ENTIRETY12.01 CLAIMS - DELETED IN ITS ENTIRETY: PLEASE REFER TO LAP DIVISION I SPECIFICATIONS PACKAGE, SECTION(S) 5-12, "CLAIMS BY CONTRACTOR."

A. DELETED IN ITS ENTIRETY.1. DELETED IN ITS ENTIRETY.2. DELETED IN ITS ENTIRETY.3. DELETED IN ITS ENTIRETY.4. DELETED IN ITS ENTIRETY.B. DELETED IN ITS ENTIRETY.C. DELETED IN ITS ENTIRETY.D. DELETED IN ITS ENTIRETY.1. 2. DELETED IN ITS ENTIRETY.3. DELETED IN ITS ENTIRETY.E. DELETED IN ITS ENTIRETY.F. DELETED IN ITS ENTIRETY.G. DELETED IN ITS ENTIRETY.ARTICLE 13—COST OF THE WORK; ALLOWANCES; UNIT PRICE WORK

13.01 *Cost of the Work*

A. *Purposes for Determination of Cost of the Work*: The term Cost of the Work means the sum of all costs necessary for the proper performance of the Work at issue, as further defined below. The provisions of this Paragraph 13.01 are used for two distinct purposes:

1. To determine Cost of the Work when Cost of the Work is a component of the Contract Price, under cost-plus-fee, time-and-materials, or other cost-based terms; or

2. When needed to determine the value of a Change Order, Change Proposal, Claim, set-off, or other adjustment in Contract Price. When the value of any such adjustment is determined on the basis of Cost of the Work, Contractor is entitled only to those additional or incremental costs required because of the change in the Work or because of the event giving rise to the adjustment.

B. *Allowable Costs for Extra Work:* Refer to Specifications 4-3.2.1 and 4-3.2.2.

13.02 *Allowances*

A. It is understood that Contractor has included in the Contract Price all allowances so named in the Contract Documents and shall cause the Work so covered to be performed for such sums and by such persons or entities as may be acceptable to Owner and Engineer.

B. *Cash Allowances*: Contractor agrees that:

1. the cash allowances include the cost to Contractor (less any applicable trade discounts) of materials and equipment required by the allowances to be delivered at the Site, and all applicable taxes; and

2. Contractor's costs for unloading and handling on the Site, labor, installation, overhead, profit, and other expenses contemplated for the cash allowances have been included in

Copyright© 2018 National Society of Professional Engineers, American Council of Engineering Companies, and American Society of Civil Engineers. All rights reserved.

the Contract Price and not in the allowances, and no demand for additional payment for any of the foregoing will be valid.

C. *Owner's Contingency Allowance*: Contractor agrees that an Owner's contingency allowance, if any, is for the sole use of Owner to cover unanticipated costs.

D. Prior to final payment, an appropriate Change Order will be issued as recommended by Engineer to reflect actual amounts due Contractor for Work covered by allowances, and the Contract Price will be correspondingly adjusted.

13.03 *Unit Price Work*

A. Where the Contract Documents provide that all or part of the Work is to be Unit Price Work, initially the Contract Price will be deemed to include for all Unit Price Work an amount equal to the sum of the unit price for each separately identified item of Unit Price Work times the estimated quantity of each item as indicated in the Agreement.

B. The estimated quantities of items of Unit Price Work are estimates and are solely for the purpose of comparison of Bids and determining an initial Contract Price. Payments to Contractor for Unit Price Work will be based on actual quantities.

C. Each unit price shall be guaranteed and will be deemed to include an amount considered by Contractor to be adequate to cover Contractor's overhead and profit for each separately identified item.

D. Engineer will determine the actual quantities and classifications of Unit Price Work performed by Contractor. Engineer will review with Contractor the Engineer's preliminary determinations on such matters before rendering a written decision thereon (by recommendation of an Application for Payment or otherwise). Engineer's written decision thereon will be final and binding (except as modified by Engineer to reflect changed factual conditions or more accurate data) upon Owner and Contractor, and the final adjustment of Contract Price will be set forth in a Change Order, subject to the provisions of the following paragraph.

E. *Adjustments in Unit Price*

1. Contractor or Owner shall be entitled to an adjustment in the unit price with respect to an item of Unit Price Work based on Specification 4-3.

ARTICLE 14—TESTS AND INSPECTIONS; CORRECTION, REMOVAL, OR ACCEPTANCE OF DEFECTIVE WORK

14.01 *Access to Work*

A. Owner, Engineer, their consultants and other representatives and personnel of Owner, independent testing laboratories, and authorities having jurisdiction have access to the Site and the Work at reasonable times for their observation, inspection, and testing. Contractor shall provide them proper and safe conditions for such access and advise them of Contractor's safety procedures and programs so that they may comply with such procedures and programs as applicable.

Copyright© 2018 National Society of Professional Engineers, American Council of Engineering Companies, and American Society of Civil Engineers. All rights reserved.

14.02 *Tests, Inspections, and Approvals*

A. Contractor shall give Engineer timely notice of readiness of the Work (or specific parts thereof) for all required inspections and tests, and shall cooperate with inspection and testing personnel to facilitate required inspections and tests.

B. Owner shall retain and pay for the services of an independent inspector, testing laboratory, or other qualified individual or entity to perform all inspections and tests expressly required by the Contract Documents to be furnished and paid for by Owner, except that costs incurred in connection with tests or inspections of covered Work will be governed by the provisions of Paragraph 14.05.

C. If Laws or Regulations of any public body having jurisdiction require any Work (or part thereof) specifically to be inspected, tested, or approved by an employee or other representative of such public body, Contractor shall assume full responsibility for arranging and obtaining such inspections, tests, or approvals, pay all costs in connection therewith, and furnish Engineer the required certificates of inspection or approval.

D. Contractor shall be responsible for arranging, obtaining, and paying for all inspections and tests required:

1. by the Contract Documents, unless the Contract Documents expressly allocate responsibility for a specific inspection or test to Owner;

2. to attain Owner's and Engineer's acceptance of materials or equipment to be incorporated in the Work;

3. by manufacturers of equipment furnished under the Contract Documents;

4. for testing, adjusting, and balancing of mechanical, electrical, and other equipment to be incorporated into the Work; and

5. for acceptance of materials, mix designs, or equipment submitted for approval prior to Contractor's purchase thereof for incorporation in the Work.

Such inspections and tests will be performed by independent inspectors, testing laboratories, or other qualified individuals or entities acceptable to Owner and Engineer.

E. If the Contract Documents require the Work (or part thereof) to be approved by Owner, Engineer, or another designated individual or entity, then Contractor shall assume full responsibility for arranging and obtaining such approvals.

F. If any Work (or the work of others) that is to be inspected, tested, or approved is covered by Contractor without written concurrence of Engineer, Contractor shall, if requested by Engineer, uncover such Work for observation. Such uncovering will be at Contractor's expense unless Contractor had given Engineer timely notice of Contractor's intention to cover the same and Engineer had not acted with reasonable promptness in response to such notice.

14.03 *Defective Work*

A. *Contractor's Obligation*: It is Contractor's obligation to assure that the Work is not defective.

B. *Engineer's Authority*: Engineer has the authority to determine whether Work is defective, and to reject defective Work.

Copyright© 2018 National Society of Professional Engineers, American Council of Engineering Companies, and American Society of Civil Engineers. All rights reserved.

C. *Notice of Defects*: Prompt written notice of all defective Work of which Owner or Engineer has actual knowledge will be given to Contractor.

D. *Correction, or Removal and Replacement*: Promptly after receipt of written notice of defective Work, Contractor shall correct all such defective Work, whether or not fabricated, installed, or completed, or, if Engineer has rejected the defective Work, remove it from the Project and replace it with Work that is not defective.

E. *Preservation of Warranties*: When correcting defective Work, Contractor shall take no action that would void or otherwise impair Owner's special warranty and guarantee, if any, on said Work.

F. *Costs and Damages*: In addition to its correction, removal, and replacement obligations with respect to defective Work, Contractor shall pay all claims, costs, losses, and damages arising out of or relating to defective Work, including but not limited to the cost of the inspection, testing, correction, removal, replacement, or reconstruction of such defective Work, fines levied against Owner by governmental authorities because the Work is defective, and the costs of repair or replacement of work of others resulting from defective Work. Prior to final payment, if Owner and Contractor are unable to agree as to the measure of such claims, costs, losses, and damages resulting from defective Work, then Owner may impose a reasonable set-off against payments due under Article 15.

14.04 *Acceptance of Defective Work*

A. If, instead of requiring correction or removal and replacement of defective Work, Owner prefers to accept it, Owner may do so (subject, if such acceptance occurs prior to final payment, to Engineer's confirmation that such acceptance is in general accord with the design intent and applicable engineering principles, and will not endanger public safety). Contractor shall pay all claims, costs, losses, and damages attributable to Owner's evaluation of and determination to accept such defective Work (such costs to be approved by Engineer as to reasonableness), and for the diminished value of the Work to the extent not otherwise paid by Contractor. If any such acceptance occurs prior to final payment, the necessary revisions in the Contract Documents with respect to the Work will be incorporated in a Change Order. If the parties are unable to agree as to the decrease in the Contract Price, reflecting the diminished value of Work so accepted, then Owner may impose a reasonable set-off against payments due under Article 15. If the acceptance of defective Work occurs after final payment, Contractor shall pay an appropriate amount to Owner.

B. Owner shall not be deemed to have accepted any defective work from Contractor that was not discovered by Engineer or Owner unless the defect was specifically detailed to Owner in writing by Contractor notifying Owner of the defective work and Owner notifies Contractor in writing that it will accept defective work (whether as-is, by receiving credit, or receiving other compensation, losses, or damage from Contractor as discussed above in Paragraph 14.04.A.) Contractor recognizes and understands that it shall not be relieved of responsibility or liability with performing defective work even if such defective work previously passed inspection by any inspector, including, without limitation, an inspector with the governing building department or a threshold inspector.

Copyright© 2018 National Society of Professional Engineers, American Council of Engineering Companies, and American Society of Civil Engineers. All rights reserved.

14.05 *Uncovering Work*

A. Engineer has the authority to require additional inspection or testing of the Work, whether or not the Work is fabricated, installed, or completed.

B. If any Work is covered contrary to the written request of Engineer, then Contractor shall, if requested by Engineer, uncover such Work for Engineer's observation, and then replace the covering, all at Contractor's expense.

C. If Engineer considers it necessary or advisable that covered Work be observed by Engineer or inspected or tested by others, then Contractor, at Engineer's request, shall uncover, expose, or otherwise make available for observation, inspection, or testing as Engineer may require, that portion of the Work in question, and provide all necessary labor, material, and equipment.

1. If it is found that the uncovered Work is defective, Contractor shall be responsible for all claims, costs, losses, and damages arising out of or relating to such uncovering, exposure, observation, inspection, and testing, and of satisfactory replacement or reconstruction (including but not limited to all costs of repair or replacement of work of others); and pending Contractor's full discharge of this responsibility the Owner shall be entitled to impose a reasonable set-off against payments due under Article 15.

2. If the uncovered Work is not found to be defective, Contractor shall be allowed an increase in the Contract Price or an extension of the Contract Times, directly attributable to such uncovering, exposure, observation, inspection, testing, replacement, and reconstruction. If the parties are unable to agree as to the amount or extent thereof, then Contractor may submit a Change Proposal within 30 days of the determination that the Work is not defective.

14.06 *Owner May Stop the Work*

A. If the Work is defective, or Contractor fails to supply sufficient skilled workers or suitable materials or equipment, or fails to perform the Work in such a way that the completed Work will conform to the Contract Documents, then Owner may order Contractor to stop the Work, or any portion thereof, until the cause for such order has been eliminated; however, this right of Owner to stop the Work will not give rise to any duty on the part of Owner to exercise this right for the benefit of Contractor, any Subcontractor, any Supplier, any other individual or entity, or any surety for, or employee or agent of any of them. The Owner shall incur no liability for delays occasioned by any stop-work order issued in accordance with this paragraph.

14.07 *Owner May Correct Defective Work*

A. If Contractor fails within a reasonable time after written notice from Engineer to correct defective Work, or to remove and replace defective Work as required by Engineer, then Owner may, after 7 days' written notice to Contractor, correct or remedy any such deficiency.

B. In exercising the rights and remedies under this Paragraph 14.07, Owner shall proceed expeditiously. In connection with such corrective or remedial action, Owner may exclude Contractor from all or part of the Site, take possession of all or part of the Work and suspend Contractor's services related thereto, and incorporate in the Work all materials and

Copyright© 2018 National Society of Professional Engineers, American Council of Engineering Companies, and American Society of Civil Engineers. All rights reserved.

equipment stored at the Site or for which Owner has paid Contractor but which are stored elsewhere. Contractor shall allow Owner, Owner's representatives, agents and employees, Owner's other contractors, and Engineer and Engineer's consultants access to the Site to enable Owner to exercise the rights and remedies under this paragraph.

C. All claims, costs, losses, and damages incurred or sustained by Owner in exercising the rights and remedies under this Paragraph 14.07 will be charged against Contractor as set-offs against payments due under Article 15. Such claims, costs, losses and damages will include but not be limited to all costs of repair, or replacement of work of others destroyed or damaged by correction, removal, or replacement of Contractor's defective Work.

D. Contractor shall not be allowed an extension of the Contract Times because of any delay in the performance of the Work attributable to the exercise by Owner of Owner's rights and remedies under this Paragraph 14.07.

ARTICLE 15—PAYMENTS TO CONTRACTOR; SET-OFFS; COMPLETION; CORRECTION PERIOD

15.01 *Progress Payments*

A. *Basis for Progress Payments*: The Schedule of Values established as provided in Article 2 will serve as the basis for progress payments and will be incorporated into a form of Application for Payment acceptable to Engineer and Owner. Progress payments for Unit Price Work will be based on the number of units completed during the pay period, as determined under the provisions of Paragraph 13.03. Progress payments for cost-based Work will be based on Cost of the Work completed by Contractor during the pay period.

B. *Applications for Payments*

1. Contractor, on the 25th of each month, shall submit to Engineer for review an Application for Payment (in a form approved by Owner) filled out and signed by Contractor covering the Work completed as of the date of the Application and accompanied by such supporting documentation as is required by the Contract Documents.

2. If payment is requested on the basis of materials and equipment not incorporated in the Work but delivered and suitably stored at the Site or at another location agreed to in writing, the Application for Payment must also be accompanied by: (a) a bill of sale, invoice, copies of subcontract or purchase order payments, or other documentation establishing full payment by Contractor for the materials and equipment; (b) at Owner's request, documentation warranting that Owner has received the materials and equipment free and clear of all Liens; and (c) evidence that the materials and equipment are covered by appropriate property insurance, a warehouse bond, or other arrangements to protect Owner's interest therein, all of which must be satisfactory to Owner.

3. Beginning with the second Application for Payment, each Application must include an affidavit of Contractor stating that all previous progress payments received by Contractor have been applied to discharge Contractor's legitimate obligations associated with prior Applications for Payment.

Copyright© 2018 National Society of Professional Engineers, American Council of Engineering Companies, and American Society of Civil Engineers. All rights reserved.

4. The amount of retainage with respect to progress payments will be as stipulated in the Agreement.

C. *Review of Applications*

1. Engineer will, within 10 days after each Application for Payment is stamped as received by Engineer, including each resubmittal, either indicate in writing a recommendation of payment and present the Application to Owner, or return the Application to Contractor indicating in writing Engineer's reasons for refusing to recommend payment and the action necessary to make payment application proper. In the latter case, Contractor shall make the necessary corrections and resubmit the Application.

2. Engineer's recommendation of any payment requested in an Application for Payment will constitute a representation by Engineer to Owner, based on Engineer's observations of the executed Work as an experienced and qualified design professional, and on Engineer's review of the Application for Payment and the accompanying data and schedules, that to the best of Engineer's knowledge, information and belief:

   a. the Work has progressed to the point indicated;

   b. the quality of the Work is generally in accordance with the Contract Documents (subject to an evaluation of the Work as a functioning whole prior to or upon Substantial Completion, the results of any subsequent tests called for in the Contract Documents, a final determination of quantities and classifications for Unit Price Work under Paragraph 13.03, and any other qualifications stated in the recommendation); and

   c. the conditions precedent to Contractor's being entitled to such payment appear to have been fulfilled in so far as it is Engineer's responsibility to observe the Work.

3. By recommending any such payment Engineer will not thereby be deemed to have represented that:

   a. inspections made to check the quality or the quantity of the Work as it has been performed have been exhaustive, extended to every aspect of the Work in progress, or involved detailed inspections of the Work beyond the responsibilities specifically assigned to Engineer in the Contract; or

   b. there may not be other matters or issues between the parties that might entitle Contractor to be paid additionally by Owner or entitle Owner to withhold payment to Contractor.

4. Neither Engineer's review of Contractor's Work for the purposes of recommending payments nor Engineer's recommendation of any payment, including final payment, will impose responsibility on Engineer:

   a. to supervise, direct, or control the Work;

   b. for the means, methods, techniques, sequences, or procedures of construction, or the safety precautions and programs incident thereto;

   c. for Contractor's failure to comply with Laws and Regulations applicable to Contractor's performance of the Work;

Copyright© 2018 National Society of Professional Engineers, American Council of Engineering Companies, and American Society of Civil Engineers. All rights reserved.

d. to make any examination to ascertain how or for what purposes Contractor has used the money paid by Owner; or

e. to determine that title to any of the Work, materials, or equipment has passed to Owner free and clear of any Liens.

5. Neither Engineer's review of Contractor's Work for purposes of recommending payments nor Engineer's recommendation of any payment shall relieve Contractor of responsibility or liability for defects in the Work.

6. Engineer may refuse to recommend the whole or any part of any payment if, in Engineer's opinion, it would be incorrect to make the representations to Owner stated in Paragraph 15.01.C.2.

6. Engineer will recommend reductions in payment (set-offs) necessary in Engineer's opinion to protect Owner from loss because:

a. the Work is defective, requiring correction or replacement;

b. the Contract Price has been reduced by Change Orders;

c. Owner has been required to correct defective Work in accordance with Paragraph 14.07, or has accepted defective Work pursuant to Paragraph 14.04;

d. Owner has been required to remove or remediate a Hazardous Environmental Condition for which Contractor is responsible; or

e. Engineer has actual knowledge of the occurrence of any of the events that would constitute a default by Contractor and therefore justify termination for cause under the Contract Documents.

D. *Payment Becomes Due*

1. Subject to the provisions of Paragraph 15.01.E. and Section 218. 735, Florida Statutes, after presentation of the Application for Payment to Owner with Engineer's recommendation, the amount recommended (subject to any Owner set-offs) shall be paid by Owner in accordance with Section 218.735, Florida Statutes, within 25 business days after the date on which the payment application is stamped as received by Engineer.

E. *Reductions in Payment by Owner*

1. In addition to any reductions in payment (set-offs) recommended by Engineer, Owner is entitled to impose a set-off against payment based on any of the following:

a. Claims have been made against Owner based on Contractor's conduct in the performance or furnishing of the Work, or Owner has incurred costs, losses, or damages resulting from Contractor's conduct in the performance or furnishing of the Work, including but not limited to claims, costs, losses, or damages from workplace injuries, adjacent property damage, non-compliance with Laws and Regulations, and patent infringement;

b. Contractor has failed to take reasonable and customary measures to avoid damage, delay, disruption, and interference with other work at or adjacent to the Site;

c. Contractor has failed to provide and maintain required bonds or insurance;

Copyright© 2018 National Society of Professional Engineers, American Council of Engineering Companies, and American Society of Civil Engineers. All rights reserved.

d. Owner has been required to remove or remediate a Hazardous Environmental Condition for which Contractor is responsible;

e. Owner has incurred extra charges or engineering costs related to submittal reviews, evaluations of proposed substitutes, tests and inspections, or return visits to manufacturing or assembly facilities;

f. The Work is defective, requiring correction or replacement;

g. Owner has been required to correct defective Work in accordance with Paragraph 14.07, or has accepted defective Work pursuant to Paragraph 14.04;

h. The Contract Price has been reduced by Change Orders;

i. An event has occurred that would constitute a default by Contractor and therefore justify a termination for cause;

j. Liquidated or other damages have accrued as a result of Contractor's failure to achieve Milestones, Substantial Completion, or final completion of the Work;

k. Liens have been filed in connection with the Work, except where Contractor has delivered a specific bond satisfactory to Owner to secure the satisfaction and discharge of such Liens; or

l. Other items entitle Owner to a set-off against the amount recommended.

2. If Owner imposes any set-off against payment, whether based on its own knowledge or on the written recommendations of Engineer, Owner will give Contractor immediate written notice (with a copy to Engineer) stating the reasons for such action and the specific amount of the reduction, and promptly pay Contractor any amount remaining after deduction of the amount so withheld. Owner shall promptly pay Contractor the amount so withheld, or any adjustment thereto agreed to by Owner and Contractor, if Contractor remedies the reasons for such action. The reduction imposed will be binding on Contractor unless it duly submits a Change Proposal contesting the reduction.

3. Upon a subsequent determination that Owner's refusal of payment was not justified, the amount wrongfully withheld will be treated as an amount due as determined by Paragraph 15.01.D.1 and subject to interest as provided in the Agreement.

15.02 *Contractor's Warranty of Title*

A. Contractor warrants and guarantees that title to all Work, materials, and equipment furnished under the Contract will pass to Owner free and clear of (1) all Liens and other title defects, and (2) all patent, licensing, copyright, or royalty obligations, no later than 7 days after the time of payment by Owner.

15.03 *Substantial Completion*

A. When Contractor considers the entire Work ready for its intended use Contractor shall notify Owner and Engineer in writing that the entire Work is substantially complete and request that Engineer issue a certificate of Substantial Completion. Contractor shall at the same time submit to Owner and Engineer an initial draft of Punch List items to be completed or corrected

Copyright© 2018 National Society of Professional Engineers, American Council of Engineering Companies, and American Society of Civil Engineers. All rights reserved.

before final payment. Substantial Completion cannot occur before the Owner is able to begin to utilize the entire Work for the purposes for which it was intended.

B. Promptly after Contractor's notification, Owner, Contractor, and Engineer shall make an inspection of the Work to determine the status of completion. If Engineer does not consider the Work substantially complete, Engineer will notify Contractor in writing giving the reasons therefor.

C. If Engineer considers the Work substantially complete, Engineer will deliver to Owner a preliminary certificate of Substantial Completion which will fix the date of Substantial Completion. Engineer shall attach to the certificate a Punch List of items to be completed or corrected before final payment Owner shall have 7 days after receipt of the preliminary certificate during which to make written objection to Engineer as to any provisions of the certificate or attached Punch List. If, after considering the objections to the provisions of the preliminary certificate, Engineer concludes that the Work is not substantially complete, Engineer will, within 14 days after submission of the preliminary certificate to Owner, notify Contractor in writing that the Work is not substantially complete, stating the reasons therefor. If Owner does not object to the provisions of the certificate, or if despite consideration of Owner's objections Engineer concludes that the Work is substantially complete, then Engineer will, within said 14 days, execute and deliver to Owner and Contractor a final certificate of Substantial Completion (with a revised Punch List of items to be completed or corrected) reflecting such changes from the preliminary certificate as Engineer believes justified after consideration of any objections from Owner.

D. At the time of receipt of the preliminary certificate of Substantial Completion, Owner and Contractor will confer regarding Owner's use or occupancy of the Work following Substantial Completion, review the builder's risk insurance policy with respect to the end of the builder's risk coverage, and confirm the transition to coverage of the Work under a permanent property insurance policy held by Owner. Unless Owner and Contractor agree otherwise in writing, Owner shall bear responsibility for security, operation, protection of the Work, property insurance, maintenance, heat, and utilities upon Owner's use or occupancy of the Work.

E. After Substantial Completion the Contractor shall promptly begin work on the Punch List of items to be completed or corrected prior to final payment. In appropriate cases Contractor may submit monthly Applications for Payment for completed Punch List items, following the progress payment procedures set forth above.

F. Owner shall have the right to exclude Contractor from the Site after the date of Substantial Completion subject to allowing Contractor reasonable access to remove its property and complete or correct items on the Punch List.

15.04 *Partial Use or Occupancy*

A. Prior to Substantial Completion of all the Work, Owner may use or occupy any substantially completed part of the Work which has specifically been identified in the Contract Documents, or which Owner, Engineer, and Contractor agree constitutes a separately functioning and usable part of the Work that can be used by Owner for its intended purpose without

Copyright© 2018 National Society of Professional Engineers, American Council of Engineering Companies, and American Society of Civil Engineers. All rights reserved.

significant interference with Contractor's performance of the remainder of the Work, subject to the following conditions:

1. At any time, Owner may request in writing that Contractor permit Owner to use or occupy any such part of the Work that Owner believes to be substantially complete. If and when Contractor agrees that such part of the Work is substantially complete, Contractor, Owner, and Engineer will follow the procedures of Paragraph 15.03.A through 15.03.E for that part of the Work.

2. At any time, Contractor may notify Owner and Engineer in writing that Contractor considers any such part of the Work substantially complete and request Engineer to issue a certificate of Substantial Completion for that part of the Work.

3. Within a reasonable time after either such request, Owner, Contractor, and Engineer shall make an inspection of that part of the Work to determine its status of completion. If Engineer does not consider that part of the Work to be substantially complete, Engineer will notify Owner and Contractor in writing giving the reasons therefor. If Engineer considers that part of the Work to be substantially complete, the provisions of Paragraph 15.03 will apply with respect to certification of Substantial Completion of that part of the Work and the division of responsibility in respect thereof and access thereto.

4. No use or occupancy or separate operation of part of the Work may occur prior to compliance with the requirements of Paragraph 6.04 regarding builder's risk or other property insurance.

15.05 *Final Inspection – Punch List*

A. Upon written notice from Contractor that the entire Work or an agreed portion thereof is complete, Engineer will promptly make a final inspection with Owner and Contractor and will notify Contractor in writing of all particulars in which this inspection reveals that the Work, or agreed portion thereof, is incomplete or defective. Contractor shall immediately take such measures as are necessary to complete such Work or remedy such deficiencies.

15.06 *Final Payment*

A. *Application for Payment*

1. After Contractor has, in the opinion of Engineer, satisfactorily completed all corrections identified during the final inspection and has delivered, in accordance with the Contract Documents, all maintenance and operating instructions, schedules, guarantees, bonds, certificates or other evidence of insurance, certificates of inspection, annotated record documents (as provided in Paragraph 7.12), and other documents, Contractor may make application for final payment.

2. The final Application for Payment must be accompanied (except as previously delivered) by:

a. all documentation called for in the Contract Documents, including but not limited to, the evidence that Contractor maintains completed operations coverage for its required commercial general liability (CGL) insurance;

Copyright© 2018 National Society of Professional Engineers, American Council of Engineering Companies, and American Society of Civil Engineers. All rights reserved.

b. consent of the surety, if any, to final payment;

c. satisfactory evidence that all title issues have been resolved such that title to all Work, materials, and equipment has passed to Owner free and clear of any Liens or other title defects, or will so pass upon final payment.

d. a list of all duly pending Change Proposals and Claims; and

e. complete and legally effective final releases or waivers (satisfactory to Owner) of all Lien rights and Liens filed in connection with the Work.

3. In lieu of the final releases or waivers of Liens specified in Paragraph 15.06.A.2 and as approved by Owner, Contractor may furnish receipts or releases in full and an affidavit of Contractor whereby Contractor swears that: (a) all payrolls, services, material, and equipment bills and other indebtedness connected with the Work for which Owner has paid Contractor through the date of Contractor's final Application for Payment have been paid by Contractor; and (b) all payrolls, material and equipment bills, and other indebtedness connected with the Work for which Owner will pay Contractor in the final Application for Payment will represent Contractor's receipt of all payments for the Work except for the specifically enumerated Claims (and Claims not specifically enumerated are deemed released and waived) and that Contractor will promptly pay its Subcontractors and Suppliers upon its receipt of the final payment. If any Subcontractor or Supplier fails to furnish such a release or receipt in full, Contractor may furnish a bond or other collateral satisfactory to Owner to indemnify Owner against any Lien, or Owner at its option may issue joint checks payable to Contractor and specified Subcontractors and Suppliers.

4. The documents and materials that Contractor is required to submit to accompany its Final Application for Payment (as set forth in this Paragraph 15.06) are conditions precedent to issuance of final payment.

B. *Engineer's Review of Final Application and Recommendation of Payment*: If, on the basis of Engineer's observation of the Work during construction and final inspection, and Engineer's review of the final Application for Payment and accompanying documentation as required by the Contract Documents, Engineer is satisfied that the Work has been completed and Contractor's other obligations under the Contract have been fulfilled, Engineer will, within 10 days after receipt of the final Application for Payment, indicate in writing Engineer's recommendation of final payment and present the final Application for Payment to Owner for payment. Such recommendation will account for any set-offs against payment that are necessary in Engineer's opinion to protect Owner from loss for the reasons stated above with respect to progress payments. Otherwise, Engineer will return the Application for Payment to Contractor, indicating in writing the reasons for refusing to recommend final payment, in which case Contractor shall make the necessary corrections and resubmit the Application for Payment.

C. *Notice of Acceptability*: In support of its recommendation of payment of the final Application for Payment, Engineer will also give written notice to Owner and Contractor that the Work is acceptable, subject to stated limitations in the notice and to the provisions of Paragraph 15.07.

Copyright© 2018 National Society of Professional Engineers, American Council of Engineering Companies, and American Society of Civil Engineers. All rights reserved.

D. *Completion of Work*: The Work is complete (subject to surviving obligations) when it is ready for final payment as established by the Engineer's written recommendation of final payment and issuance of notice of the acceptability of the Work.

E. *Final Payment Becomes Due*: Upon receipt from Engineer of the final Application for Payment and accompanying documentation, Owner shall set off against the amount recommended by Engineer for final payment any further sum to which Owner is entitled, including but not limited to set-offs for liquidated damages and set-offs allowed under the provisions of this Contract with respect to progress payments. Owner shall pay the resulting balance due to Contractor within Twenty-five (25) days of the final Application for Payment being stamped as received by Engineer.

15.07 *Waiver of Claims*

A. By making final payment, Owner waives its claim or right to liquidated damages or other damages for late completion by Contractor, except as set forth in an outstanding Claim, appeal under the provisions of Article 17, set-off, or express reservation of rights by Owner. Owner reserves all other claims or rights after final payment.

B. The acceptance of final payment by Contractor will constitute a waiver by Contractor of all claims and rights against Owner other than those pending matters that have been duly submitted as a Claim, or appealed under the provisions of Article 17.

15.08 *Correction Period*

A. If within one year after the date of Substantial Completion (or such longer period of time as may be prescribed by the Supplementary Conditions or the terms of any applicable special guarantee required by the Contract Documents), Owner gives Contractor written notice that any Work has been found to be defective, or that Contractor's repair of any damages to the Site or adjacent areas has been found to be defective, then after receipt of such notice of defect Contractor shall promptly, without cost to Owner and in accordance with Owner's written instructions:

1. correct the defective repairs to the Site or such adjacent areas;
2. correct such defective Work;
3. remove the defective Work from the Project and replace it with Work that is not defective, if the defective Work has been rejected by Owner, and
4. satisfactorily correct or repair or remove and replace any damage to other Work, to the work of others, or to other land or areas resulting from the corrective measures.

B. Owner shall give any such notice of defect within 60 days of the discovery that such Work or repairs is defective. If such notice is given within such 60 days but after the end of the correction period, the notice will be deemed a notice of defective Work under Paragraph 7.17.B.

C. If, after receipt of a notice of defect within 60 days and within the correction period, Contractor does not promptly comply with the terms of Owner's written instructions, or in an emergency where delay would cause serious risk of loss or damage, Owner may have the defective Work corrected or repaired or may have the rejected Work removed and replaced.

Copyright© 2018 National Society of Professional Engineers, American Council of Engineering Companies, and American Society of Civil Engineers. All rights reserved.

Contractor shall pay all costs, losses, and damages (including but not limited to all fees and charges of engineers, architects, attorneys, and other professionals and all court or arbitration or other dispute resolution costs) arising out of or relating to such correction or repair or such removal and replacement (including but not limited to all costs of repair or replacement of work of others). Contractor's failure to pay such costs, losses, and damages within 10 days of invoice from Owner will be deemed the start of an event giving rise to a Claim under Paragraph 12.01.B, such that any related Claim must be brought within 30 days of the failure to pay.

D. In special circumstances where a particular item of equipment is placed in continuous service before Substantial Completion of all the Work, the correction period for that item may start to run from an earlier date if so provided in the Specifications.

E. Where defective Work (and damage to other Work resulting therefrom) has been corrected or removed and replaced under this paragraph, the correction period hereunder with respect to such Work will be extended for an additional period of one year after such correction or removal and replacement has been satisfactorily completed.

F. Contractor's obligations under this paragraph are in addition to all other obligations and warranties. The provisions of this paragraph are not to be construed as a substitute for, or a waiver of, the provisions of any applicable statute of limitation or repose.

ARTICLE 16—SUSPENSION OF WORK AND TERMINATION

16.01 *Owner May Suspend Work*

A. At any time and without cause, Owner may suspend the Work or any portion thereof for a period of not more than 90 consecutive days by written notice to Contractor and Engineer. Such notice will fix the date on which Work will be resumed. Contractor shall resume the Work on the date so fixed. Contractor shall be entitled to an adjustment in the Contract Price or an extension of the Contract Times directly attributable to any such suspension. Any Change Proposal seeking such adjustments must be submitted no later than 30 days after the date fixed for resumption of Work.

16.02 *Owner May Terminate for Cause*

A. The occurrence of any one or more of the following events will constitute a default by Contractor and justify termination for cause:

1. Contractor's persistent failure to perform the Work in accordance with the Contract Documents (including, but not limited to, failure to supply sufficient skilled workers or suitable materials or equipment, or failure to adhere to the Progress Schedule);

2. Failure of Contractor to perform or otherwise to comply with a material term of the Contract Documents;

3. Contractor's disregard of Laws or Regulations of any public body having jurisdiction;

4. Contractor's repeated disregard of the authority of Owner or Engineer:

5. Contractor's failure to timely pay Subcontractors and Suppliers after it receives payment from Owner, or

Copyright© 2018 National Society of Professional Engineers, American Council of Engineering Companies, and American Society of Civil Engineers. All rights reserved.

6. Contractor's failure to obtain or maintain the insurance required of it in the Contract.

B. If one or more of the events identified in Paragraph 16.02.A occurs, then after giving Contractor (and any surety) 5 days' written notice that Owner is considering a declaration that Contractor is in default and termination of the Contract, Owner may proceed to:

1. declare Contractor to be in default, and give Contractor (and any surety) written notice that the Contract is terminated; and

2. enforce the rights available to Owner under any applicable performance bond.

C. Subject to the terms and operation of any applicable performance bond, if Owner has terminated the Contract for cause, Owner may exclude Contractor from the Site, take possession of the Work, incorporate in the Work all materials and equipment stored at the Site or for which Owner has paid Contractor but which are stored elsewhere, and complete the Work as Owner may deem expedient.

D. Owner may not proceed with termination of the Contract under Paragraph 16.02.B if Contractor within 5 days of receipt of notice of intent to terminate begins to correct its failure to perform and proceeds diligently to cure such failure.

E. If Owner proceeds as provided in Paragraph 16.02.B, Contractor shall not be entitled to receive any further payment until the Work is completed. If the unpaid balance of the Contract Price exceeds the cost to complete the Work, including all related claims, costs, losses, and damages (including but not limited to all fees and charges of engineers, architects, attorneys, and other professionals) sustained by Owner, such excess will be paid to Contractor. If the cost to complete the Work including such related claims, costs, losses, and damages exceeds such unpaid balance, Contractor shall pay the difference to Owner. When exercising any rights or remedies under this paragraph, Owner shall not be required to obtain the lowest price for the Work performed.

F. Where Contractor's services have been so terminated by Owner, the termination will not affect any rights or remedies of Owner against Contractor then existing or which may thereafter accrue, or any rights or remedies of Owner against Contractor or any surety under any payment bond or performance bond. Any retention or payment of money due Contractor by Owner will not release Contractor from liability.

G. If and to the extent that Contractor has provided a performance bond under the provisions of Paragraph 6.01.A, the provisions of that bond will govern over any inconsistent provisions of Paragraphs 16.02.B and 16.02.D.

16.03 *Owner May Terminate for Convenience*

A. Upon 5 days' written notice to Contractor and Engineer, Owner may, without cause and without prejudice to any other right or remedy of Owner, terminate the Contract. In such case, Contractor shall be paid for (without duplication of any items):

1. completed and acceptable Work executed in accordance with the Contract Documents prior to the effective date of termination, including fair and reasonable sums for overhead and profit on such Work;

Copyright© 2018 National Society of Professional Engineers, American Council of Engineering Companies, and American Society of Civil Engineers. All rights reserved.

2. expenses sustained prior to the effective date of termination in performing services and furnishing labor, materials, or equipment as required by the Contract Documents in connection with uncompleted Work, plus fair and reasonable sums for overhead and profit on such expenses; and

3. other reasonable expenses directly attributable to termination, such as demobilization expenses, and including costs incurred to prepare a termination for convenience cost proposal. Attorneys' fees, accountant fees, home office overhead and similar expenses shall not be deemed reasonable expenses.

B. Contractor shall not be paid for any loss of anticipated profits or revenue, post-termination overhead costs, or other economic loss arising out of or resulting from such termination.

16.04 *Contractor May Stop Work or Terminate*

A. If, through no act or fault of Contractor, (1) the Work is suspended for more than 90 consecutive days by Owner or under an order of court or other public authority, or (2) Engineer fails to act on any Application for Payment within 30 days after it is submitted, or (3) Owner fails for 30 days to pay Contractor any sum finally determined to be due, then Contractor may, upon 7 days' written notice to Owner and Engineer, and provided Owner or Engineer do not remedy such suspension or failure within that time, terminate the contract and recover from Owner payment on the same terms as provided in Paragraph 16.03. Contractor, however, cannot terminate the Contract due to any dispute (i) concerning the amount of payment due Contractor or (ii) any amounts Owner is withholding from Contractor.

B. In lieu of terminating the Contract and without prejudice to any other right or remedy, if Engineer has failed to act on an Application for Payment within 30 days after it is submitted, or Owner has failed for 30 days to pay Contractor any sum finally determined to be due, Contractor may, 7 days after written notice to Owner and Engineer, stop the Work until payment is made of all such amounts due Contractor, including interest thereon. The provisions of this paragraph are not intended to preclude Contractor from submitting a Change Proposal for an adjustment in Contract Price or Contract Times or otherwise for expenses or damage directly attributable to Contractor's stopping the Work as permitted by this paragraph. Contractor, however, cannot stop the Work due to any dispute (i) concerning the amount of payment due Contractor or (ii) any amounts Owner is withholding from Contractor.

DRAFT

Copyright© 2018 National Society of Professional Engineers, American Council of Engineering Companies, and American Society of Civil Engineers. All rights reserved.

ARTICLE 17—FINAL RESOLUTION OF DISPUTES

17.01 *Deleted in its entirety.*

A. Deleted in its entirety.

1. Deleted in its entirety.

2. Deleted in its entirety.

B. Deleted in its entirety.

1. Deleted in its entirety.

2. Deleted in its entirety.

3. Deleted in its entirety.

1. *Claims, disputes or other matters in question between the parties to this Agreement shall be first subject to pre-suit mediation prior to the filing of any legal claims or litigation. Completion of pre-suit mediation is a condition precedent to litigation. The obligation to mediate is a material and essential provision of the Agreement.*
2. *Unless otherwise agreed in writing, the Contractor shall carry on the Work and maintain its progress during any mediation or litigation, and the Owner shall continue to make payments to the Contractor in accordance with the Contract Documents.*
3. *Either party may initiate a mediation preceding by a request in writing to the other party within a reasonable time after the claim, dispute or other matter in question has arisen or as provided in subparagraph ___, but in no event after the expiration of the applicable statute of limitations.*
4. *The parties shall endeavor in good faith to mutually agree upon an acceptable mediator. In the event the parties have not agreed upon a mediator within thirty (30) days of the request for mediation, the Orlando office of the American Arbitration Association, upon the written request of either party, shall appoint a mediator from its pool of approved mediators.*
5. *Unless otherwise mutually agreed, the mediation shall be held in accordance with the Construction Industry Mediation Rules of the American Arbitration Association currently in effect, each party to bear its own fees, costs and expenses.*
6. *In the event that pre-suit mediation is unsuccessful, all claims, disputes or other matters in question shall be resolved in the Circuit Courts of Volusia County Florida. The Parties, including the*

DRAFT

Copyright© 2018 National Society of Professional Engineers, American Council of Engineering Companies, and American Society of Civil Engineers. All rights reserved.

Contractor's Surety, waive Venue and Jurisdiction of any Federal Court and expressly waive Trial by Jury.

ARTICLE 18—MISCELLANEOUS

18.01 *Giving Notice*

A. Whenever any provision of the Contract requires the giving of written notice to Owner, Engineer, or Contractor, it will be deemed to have been validly given only if delivered:

1. in person, by a commercial courier service or otherwise, to the recipient's place of business;

2. by registered or certified mail, postage prepaid, to the recipient's place of business; or

3. by e-mail to the recipient, with the words "Formal Notice" or similar in the e-mail's subject line.

18.02 *Computation of Times*

A. When any period of time is referred to in the Contract by days, it will be computed to exclude the first and include the last day of such period. If the last day of any such period falls on a Saturday or Sunday or on a day made a legal holiday by the law of the applicable jurisdiction, such day will be omitted from the computation.

18.03 *Cumulative Remedies*

A. The duties and obligations imposed by these General Conditions and the rights and remedies available hereunder to the parties hereto are in addition to, and are not to be construed in any way as a limitation of, any rights and remedies available to any or all of them which are otherwise imposed or available by Laws or Regulations, by special warranty or guarantee, or by other provisions of the Contract. The provisions of this paragraph will be as effective as if repeated specifically in the Contract Documents in connection with each particular duty, obligation, right, and remedy to which they apply.

18.04 *Limitation of Damages*

A. With respect to any and all Change Proposals, Claims, disputes subject to final resolution, and other matters at issue, neither Owner nor Engineer, nor any of their officers, directors, members, partners, employees, agents, consultants, or subcontractors, shall be liable to Contractor for any claims, costs, losses, or damages sustained by Contractor on or in connection with any other project or anticipated project.

18.05 *No Waiver*

A. A party's non-enforcement of any provision will not constitute a waiver of that provision, nor will it affect the enforceability of that provision or of the remainder of this Contract.

18.06 *Survival of Obligations*

A. All representations, indemnifications, warranties, and guarantees made in, required by, or given in accordance with the Contract, as well as all continuing obligations indicated in the

Copyright© 2018 National Society of Professional Engineers, American Council of Engineering Companies, and American Society of Civil Engineers. All rights reserved.

Contract, will survive final payment, completion, and acceptance of the Work or termination of the Contract or of the services of Contractor.

18.07 *Controlling Law*

A. This Contract is to be governed by the law of the State of Florida.

18.08 *Assignment of Contract*

A. Unless expressly agreed to elsewhere in the Contract, no assignment by a party to this Contract of any rights under or interests in the Contract will be binding on the other party without the written consent of the party sought to be bound; and, specifically but without limitation, money that may become due and money that is due may not be assigned without such consent (except to the extent that the effect of this restriction may be limited by law), and unless specifically stated to the contrary in any written consent to an assignment, no assignment will release or discharge the assignor from any duty or responsibility under the Contract.

18.09 *Successors and Assigns*

A. Owner and Contractor each binds itself, its successors, assigns, and legal representatives to the other party hereto, its successors, assigns, and legal representatives in respect to all covenants, agreements, and obligations contained in the Contract Documents.

18.10 *Headings*

A. Article and paragraph headings are inserted for convenience only and do not constitute parts of these General Conditions.

DRAFT

Copyright© 2018 National Society of Professional Engineers, American Council of Engineering Companies, and American Society of Civil Engineers. All rights reserved.

EXHIBIT 1 - SPECIFICATIONS

May 7, 2025
PREPARED BY: Forest W. Adkins
REVIEWED BY: Merlynn Anderson

SPECIFICATIONS PACKAGE
Contract Number: _____
FINANCIAL PROJECT ID(S).439865-3-54-01

DISTRICT FIVE
CITY OF PORT ORANGE, VOLUSIA COUNTY

The FY 2025-26 edition of the Construction Details and Materials divisions (Division II & III) of the Florida 5epartment of Transportation Standard Specifications for Road and Bridge Construction are revised, as follows:

I hereby certify that this specifications package has been properly prepared by me, or under my responsible charge, in accordance with procedures adopted by the Florida Department of Transportation.

This item has been digitally signed and sealed by Forest W. Adkins, P.E on the date adjacent to the seal. Printed copies of this document are not considered signed and sealed and the signature must be verified on any electronic copies.

Date:	05/07/2025
State of Florida,	
Professional Engineer, License No.:	56003
Firm Name:	Stanley Consultants, Inc.
Firm Address:	80 Spring Vista Drive
City, State, Zip Code:	Debary, Florida 32713
Page(s):	6

MODIFIED SPECIAL PROVISIONS 3

SCOPE OF WORK – INTENT OF CONTRACT..... 4
MAINTENANCE OF TRAFFIC..... 4
CONTRACTOR QUALITY CONTROL GENERAL REQUIREMENTS..... 5

THIS COMPLETES THIS SPECIFICATIONS PACKAGE 6

MODIFIED SPECIAL PROVISIONS

SCOPE OF WORK – INTENT OF CONTRACT.
(FY 2025-26)

SUBARTICLE 4-1 is expanded by the following:

The Improvements under this Contract consist of the construction of trail and lighting improvements to enhance safety, particularly at points of conflict such as roadway crossings. Minor drainage and utility adjustments and construction of a pedestrian bridge with associated gravity walls will also be included.

MAINTENANCE OF TRAFFIC.
(FY 2025-26) (5-25)

SUBARTICLE 102-3.2 is deleted and the following substituted:

102-3.2 Worksite Traffic Supervisor (WTS): Provide a WTS who is responsible for initiating, installing, and maintaining all temporary traffic control devices as described in this Section and the Contract Documents. Provide all equipment and materials needed to set up, take down, maintain traffic control, and handle traffic-related situations. ~~Provide the WTS or designee with a tablet or smartphone with internet access for recording information into the Department's lane closure notification system.~~ Use approved alternate WTS when necessary.

The WTS must meet the personnel qualifications specified in Section 105.

The WTS is to perform the following duties:

1. On site direction of all temporary traffic control on the project.
2. Is on site during all set up, and take down, and performs a drive through inspection immediately after set up. ~~During operations with lane closures, the WTS or on-site designee shall record lane closure information into the Department's lane closure notification system in accordance with 102-3.3.~~
3. Is on site during all nighttime operations ensuring proper temporary traffic control.
4. Immediately corrects all safety deficiencies and corrects minor deficiencies that are not immediate safety hazards within 24 hours.
5. Is available on a 24 hour per day basis and present at the site within 45 minutes after notification of an emergency situation and is prepared to respond to maintain temporary traffic control or to provide alternate traffic arrangements.
6. Conducts daily daytime and weekly nighttime inspections of projects with predominately daytime work activities, and daily nighttime and weekly daytime inspections of projects with predominantly nighttime work activities of all traffic control devices, traffic flow, pedestrian, bicyclist, and business accommodations.

Advise the project personnel of the schedule of these inspections and give them the opportunity to join in the inspection as deemed necessary. The Department may disqualify and remove from the project a WTS who fails to comply with the provisions of this Section.

The Department may temporarily suspend all activities, except traffic, erosion control and such other activities that are necessary for project maintenance and safety, for failure to comply with these provisions.

SUBARTICLE 102-3.3 is deleted and the following substituted:

102-3.3 Lane Closures: Approval for all lane closures, mobile operations, and traffic pacing operations is required. Submit routine requests to the Engineer 14 calendar days in advance of planned lane closures, mobile operations, and traffic pacing operations. ~~Requests for planned lane closures are to be submitted through the Department's Lane Closure Notification System (LCNS).~~ For unforeseen events that require cancelling or rescheduling lane closures, mobile operations, and traffic pacing operations, revise the lane closure request as soon as possible.

~~Record information for lane closures, including but not limited to begin and end lane closure times and locations, into the Department's LCNS. Lane closures are to be activated in the Department's LCNS within five minutes of placing the first channelizing device and deactivated within 5 minutes removing the last channelizing device associated with the closure.~~

~~At the preconstruction conference, submit a request for access to the Department's LCNS to the Engineer. Include the name, email address, level of access required, and a copy of the individual's certification of training for Contractor personnel requiring access to the Department's LCNS. For change of access requests, submit a request to the Engineer at least ten calendar days in advance of when the change is needed.~~

102-3.3.1 Traffic Pacing: In addition to dates and locations, include a pacing plan outlining the expected equipment and number of traffic control officers required, the proposed traffic pacing lengths and durations, the available existing egresses in the event of an emergency, and a contingency plan in the event of an equipment failure.

CONTRACTOR QUALITY CONTROL GENERAL REQUIREMENTS.
(FY 2025-26) (5-25)

SUBARTICLE 105-1.1.2 is deleted and the following substituted:

Test data shall not be required to be entered into any FDOT and/or City of Port Orange databases.

THIS COMPLETES THIS SPECIFICATIONS PACKAGE

EXHIBIT 2 - ENVIRONMENTAL PERMITS

DEPARTMENT OF THE ARMY
U.S. ARMY CORPS OF ENGINEERS, JACKSONVILLE DISTRICT
COCOA PERMITS SECTION
400 HIGH POINT DRIVE, SUITE 600
COCOA FLORIDA 32926

March 19, 2025

South Atlantic Division
Regulatory Technical
Regional Execution Center
SAJ-2024-02331 (NW–TCP)

Valerie Duhl
Community Development Engineer
City of Port Orange
1000 City Center Circle
Port Orange, FL 32129
Via Email: vduhl@port-orange.org

Dear Ms. Duhl:

This letter is in response to the Pre-Construction Notification (PCN) you submitted to the Jacksonville District, Technical Regional Execution Center on July 3, 2024 for a Department of the Army Nationwide permit (NWP) verification. This project has been assigned the file number SAJ-2024-02331 (NW–TCP) and is known as Sun Trail SJR2C Loop Trail. This file number should be referenced in all correspondence concerning this project.

A review of the information provided indicates that the proposed work would include temporary impacts to 0.486 acres of forested wetlands to facilitate the construction of an 8-foot-wide by 695-foot-long elevated walkway through the wetlands and 103 square feet of impacts to Halifax Canal for the installation of a stormwater outlet. The proposed work in waters is part of a larger overall project consisting of improvements to the St. Johns River to Sea Loop Trail, an existing pedestrian trail system. The portion of the project involving work in waters begins near the corner of Canal View Boulevard and Spruce Creek Road at Latitude 29.140975 and Longitude -80.998367 and ends near the intersection of Herbert Street and 6th Street at Latitude 29.143001 and Longitude -80.998897, within Section 04, Township 016S, Range 033E; in Port Orange, Volusia County, Florida.

We have determined that the proposed work is authorized by Nationwide Permit 14 Linear Transportation Projects pursuant to authorities under Section 404 of the Clean Water Act (33 U.S.C. § 1344). The proposed work must be accomplished in strict accordance with the general permit conditions, any regional conditions, the special conditions listed in this letter, the application materials, and the enclosed plans labelled “City of Port Orange c/o Valerie Duhl SAJ-2024-02331”. If the extent of the project area

and/or nature of the authorized impacts to waters are modified, a revised PCN must be submitted to this office for written approval before work is initiated. Any violation of permit conditions or deviation from your submitted plans may subject the permittee to enforcement action.

This verification is valid until March 14, 2026, unless prior to this date the subject NWP(s) is suspended, revoked, or is modified such that the activity no longer complies with the terms and conditions of this NWP. If you commence or are under contract to commence this activity before the date that the relevant NWP is modified or revoked, you will have 12 months from the date of the modification or revocation of the NWP to complete the activity under the present terms and conditions of this NWP. You can access the U.S. Army Corps of Engineers' (Corps) Jacksonville District's Regulatory Source Book webpage for links to view NWP information at: https://www.saj.usace.army.mil/Missions/Regulatory/Source-Book/.
Please be aware this Internet address is case sensitive and should be entered as it appears above. Once there, you will need to select "Nationwide Permits." Among other things, this part of the Source Book contains links to the federal register containing the text of the pertinent NWP authorization and the associated NWP general conditions, as well as separate links to the regional conditions applicable to the pertinent NWP verification.

Project Specific Special Conditions:

1. **Reporting Address:** The Permittee shall submit all reports, notifications, documentation, and correspondence required by the general and special conditions of this permit to either (not both) of the following addresses:

   a. For electronic mail (preferred): SAJ-RD-Enforcement@usace.army.mil (not to exceed 15 MB).

   b. For standard mail: U.S. Army Corps of Engineers, Regulatory Division, Enforcement Section, P.O. Box 4970, Jacksonville, FL 32232-0019.

   The Permittee shall reference this permit number, SAJ-2024-02331 (NW–TCP), on all submittals.

2. **Permit Conditions Prevail:** If information in the permit attachments conflict with the special conditions of this permit, the requirements of the permit special conditions shall prevail.

3. **Posting of Permit:** The Permittee shall have available and maintain for review a copy of this permit and approved plans at the construction site.

4. **Self-Certification:** Within 60 days of completion of the work authorized by this permit, the Permittee shall complete the ENG Form 6285, "Certification of Compliance with Department of Army Permit" (located

at https://www.publications.usace.army.mil/Portals/76/Eng_Form_6285_2024%20Dec%20FINAL.pdf) and submit it to the Corps.

5. **Cultural Resources/Historic Properties:**

   a. No structure or work shall adversely affect, impact, or disturb properties listed in the *National Register of Historic Places* (NRHP), or those eligible for inclusion in the NRHP.

   b. If, during the ground disturbing activities and construction work within the permit area, there are archaeological/cultural materials encountered which were not the subject of a previous cultural resources assessment survey (and which shall include, but not be limited to: pottery, modified shell, human remains, ceramics, stone tools or metal implements, dugout canoes, evidence of structures or any other physical remains that could be associated with native cultures or early colonial settlement), the Permittee shall immediately stop all work and ground-disturbing activities within a 100-meter diameter of the discovery and notify the Corps at the addresses listed in the **Reporting Address Special Condition** within the same business day (8 hours). The Corps shall coordinate with the Florida State Historic Preservation Officer (SHPO) to assess the significance of the discovery and devise appropriate actions.

   c. Additional cultural resources assessments may be required of the permit area in the case of unanticipated discoveries as referenced in accordance with the above Special Condition and, if deemed necessary by the SHPO or Corps, in accordance with 36 CFR 800 or 33 CFR 325, Appendix C (5). Based on the circumstances of the discovery, equity to all parties, and considerations of the public interest, the Corps may modify, suspend, or revoke the permit in accordance with 33 CFR Part 325.7. Such activity shall not resume on non-federal lands without written authorization from the SHPO for finds under his or her jurisdiction, and from the Corps.

   d. In the unlikely event that unmarked human remains are identified on non-federal lands; they will be treated in accordance with Section 872.05 Florida Statutes. All work and ground disturbing activities within a 100-meter diameter of the unmarked human remains shall immediately cease, and the Permittee shall immediately notify the medical examiner, Corps, and State Archaeologist within the same business day (8-hours). The Corps shall then notify the appropriate SHPO. Based on the circumstances of the discovery, equity to all parties, and considerations of the public interest, the Corps may modify, suspend, or revoke the permit in accordance with 33 CFR Part 325.7. Such activity shall not resume without written authorization from the SHPO and from the Corps.

6. **Proposed Species/Critical Habitat:** The action falls within the range for the monarch butterfly and the tricolored bat, which are proposed to be federally listed under the Endangered Species Act. If either of these species becomes federally listed and the authorized work has not been completed, the Permittee is required to stop work and ask the Corps to re-evaluate the effects of the permitted action on the species, and if needed, complete Section 7 consultation with the U.S. Fish and Wildlife Service to address potential impacts to the species.

This letter of authorization does not include conditions that would prevent the 'take' of a state-listed fish or wildlife species. These species are protected under sec. 379.411, Florida Statutes, and listed under Rule 68A-27, Florida Administrative Code. With regard to fish and wildlife species designated as species of special concern or threatened by the State of Florida, you are responsible for coordinating directly with the Florida Fish and Wildlife Conservation Commission (FWC). You can visit the FWC license and permitting webpage (http://www.myfwc.com/license/wildlife/) for more information, including a list of those fish and wildlife species designated as species of special concern or threatened. The Florida Natural Areas Inventory (http://www.fnai.org/) also maintains updated lists, by county, of documented occurrences of those species.

This letter of authorization does not give absolute Federal authority to perform the work as specified on your application. The proposed work may be subject to local building restrictions mandated by the National Flood Insurance Program. You should contact your local office that issues building permits to determine if your site is located in a flood-prone area, and if you must comply with the local building requirements mandated by the National Flood Insurance Program.

This NWP verification does not preclude the necessity to obtain any other Federal, State, or local permits, licenses, and/or certifications, which may be required.

If you have any questions related to this verification or have issues accessing documents referenced in this letter, please contact Taylor Parks, none of the Technical Regional Execution Center at 904-676-0634, by mail at the above address, or by email at taylor.c.parks@usace.army.mil. Please take a moment to complete our customer satisfaction survey located at https://regulatory.ops.usace.army.mil/customer-service-survey/.

Sincerely,



Taylor Parks
Biologist

Enclosures

Cc (w/enclosures)
Brennan Hagan, Terracon Consultants, Inc. (via brennan.hagan@terracon.com)

General Conditions (33 CFR PART 320-330):

1. The time limit for completing the work authorized ends on **March 14, 2026.**

2. You must maintain the activity authorized by this permit in good condition and in conformance with the terms and conditions of this permit. You are not relieved of this requirement if you abandon the permitted activity, although you may make a good faith transfer to a third party in compliance with General Condition 4 below. Should you wish to cease to maintain the authorized activity, or should you desire to abandon it without a good faith transfer, you must obtain a modification of this permit from this office, which may require restoration of the area.

3. If you discover any previously unknown historic or archeological remains while accomplishing the activity authorized by this permit, you must immediately notify this office of what you have found. We will initiate the Federal and state coordination required to determine if the remains warrant a recovery effort of if the site is eligible for listing in the National Register of Historic Places.

4. If you sell the property associated with this permit you must obtain the signature of the new owner on the transfer form attached to this letter and forward a copy to this office to validate the transfer of this authorization.

5. You must allow a representative from this office to inspect the authorized activity at any time deemed necessary to ensure that it is being or has been accomplished in accordance with the terms and conditions of your permit.

Compliance Certification Form

File Number: SAJ-2024-02331 (NW–TCP) **County: Volusia**

Permittee: City of Port Orange, Valerie Duhl

Project Name: Sun Trail SJR2C Loop Trail

Date Verification Issued: 3/19/2025

Project Manager: Taylor Parks

Within 60 days of completion of the activity authorized by this permit and any mitigation required by the permit, sign this certification and return it to the following address:

US ARMY CORPS OF ENGINEERS
Jacksonville District
Enforcement Section
P.O. Box 4970
Jacksonville, FL 32232-0019
or
saj-rd-enforcement@usace.army.mil (preferred)

Please note that your permitted activity is subject to a compliance inspection by a U. S. Army Corps of Engineers representative. Failure to comply with any terms or conditions of this authorization may result in the Corps suspending, modifying or revoking the authorization and/or issuing a Class I administrative penalty, or initiating other appropriate legal action.

I hereby certify that the work, and mitigation (if applicable), authorized by the above referenced permit has been completed in accordance with the terms and conditions of the said permit including any general or specific conditions.

Date Authorized Work Started: _____ **Completed: _____**

Describe any deviations from permit (attach drawing(s) depicting the deviations):

_____

_____

***Note: The description of any deviations on this form does not constitute approval by the Corps.**

_____ _____

Signature of Permittee **Date**

DEPARTMENT OF THE ARMY PERMIT TRANSFER REQUEST

DA PERMIT NUMBER: SAJ-2024-02331 (NW–TCP)

When the structures or work authorized by this permit are still in existence at the time the property is transferred, the terms and conditions of this permit will continue to be binding on the new owner(s) of the property. Although the construction period for works authorized by Department of the Army permits is finite, the permit itself, with its limitations, does not expire.

To validate the transfer of this permit and the associated responsibilities associated with compliance with its terms and conditions, have the transferee sign and date below and mail to the U.S. Army Corps of Engineers, Enforcement Section, Post Office Box 4970, Jacksonville, FL 32232-0019 or submit via electronic mail to: SAJ-RD-Enforcement@usace.army.mil (not to exceed 15 MB).

_____
(TRANSFEREE-SIGNATURE)

_____
(DATE)

_____
(NAME-PRINTED)

_____

_____
(MAILING ADDRESS)

_____
(CITY, STATE, ZIP CODE)

_____
(SUBDIVISION)

_____ _____
(LOT) **(BLOCK)**

_____
(STREET ADDRESS)



Project No.:	H1217592
Date:	Sep 2023
Drawn By:	GRS
Reviewed By:	BH

Terracon
1675 Lee Road Winter Park, FL 32789
PH. (407) 740-6110 terracon.com

Project Boundary

Environmental Resource Permit
SJR2C Loop Trail (Spruce Creek Road)
Volusia County, Florida

Exhibit

1

City of Port Orange c/o Valerie Duhl SAJ-2024-02331 (Sheet 1 of 11)

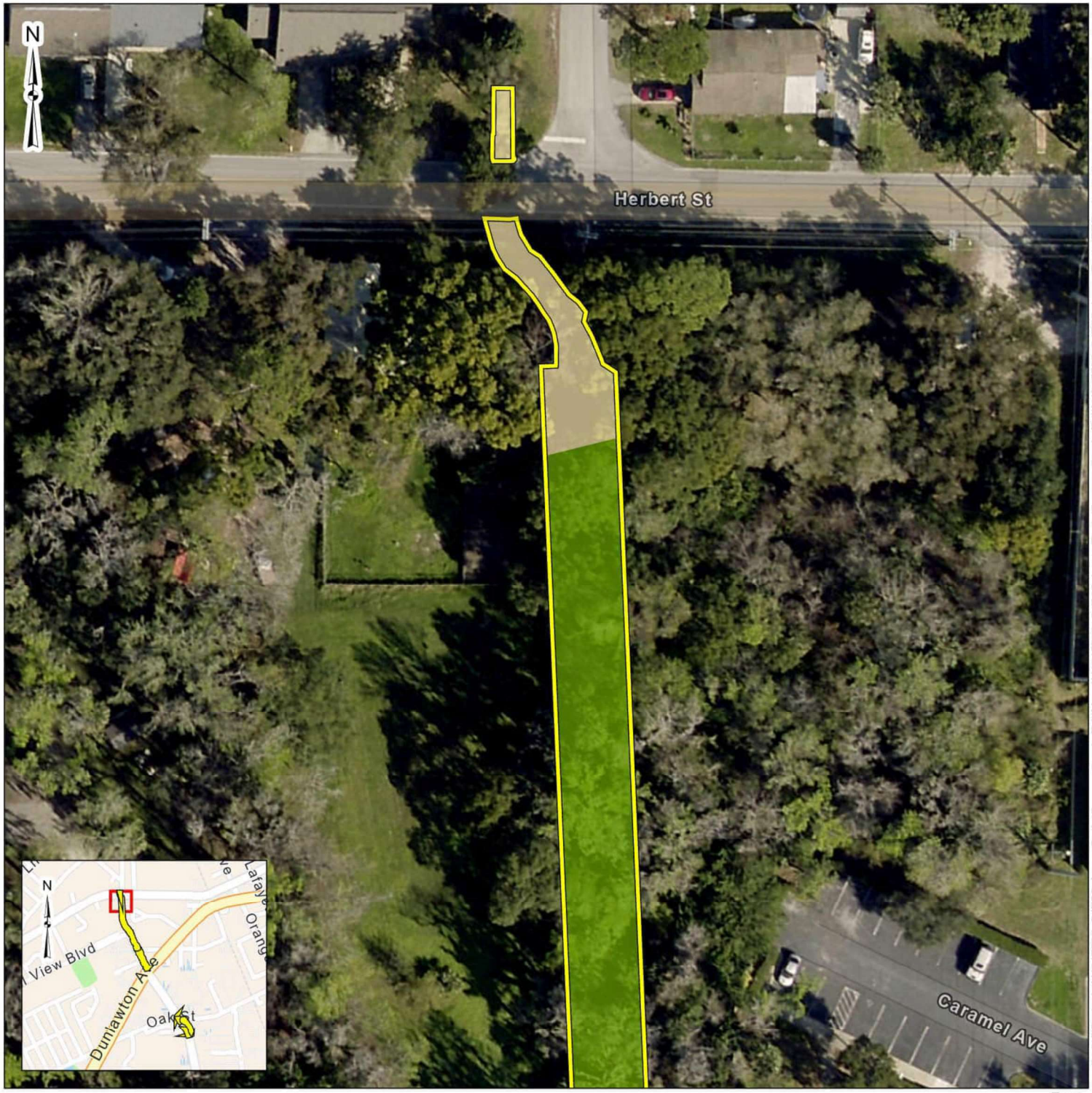

Project Areas (Construction Limits) (1.42 ac.±)
Uplands (0.92 ac.±)
Wetlands (0.49 ac.±)
Other Surface Water (0.01 ac.±)

Feet
0 30 60 120

DATA SOURCES:
Terracon - Wetland Delineation; ESRI World Imagery Basemap & World Navigation Map

C:\GIS\Projects\H1217592_SJR2C_Loop_Trail_(Spruce_Creek_Rd)\Maps\H1217592_SJR2C_Loop_Trail_(Spruce_Creek_Rd)\H1217592_SJR2C_Loop_Trail_(ERPsubmittal).aprx

Project No.:	H1217592
Date:	Sep 2023
Drawn By:	GRS
Reviewed By:	BH

Terracon
1675 Lee Road Winter Park, FL 32789
PH. (407) 740-6110 terracon.com

Wetland Delineation

Environmental Resource Permit
SJR2C Loop Trail (Spruce Creek Road)
Volusia County, Florida

Exhibit

7.1

City of Port Orange c/o Valerie Duhl SAJ-2024-02331 (Sheet 2 of 11)



Project Areas (Construction Limits) (1.42 ac.±)
Uplands (0.92 ac.±)
Wetlands (0.49 ac.±)
Other Surface Water (0.01 ac.±)

Feet
0 30 60 120

DATA SOURCES:
Terracon - Wetland Delineation; ESRI World Imagery Basemap & World Navigation Map

C:\GIS\Projects\H1217592_SJR2C_Loop_Trail_(Spruce_Creek_Rd)\Maps\H1217592_SJR2C_Loop_Trail_(Spruce_Creek_Rd)H1217592_SJR2C_Loop_Trail_(ERPSubmittal).aprx

Project No.: H1217592 Date: Sep 2023 Drawn By: GRS Reviewed By: BH	Terracon 1675 Lee Road Winter Park, FL 32789 PH. (407) 740-6110 terracon.com	**Wetland Delineation** Environmental Resource Permit SJR2C Loop Trail (Spruce Creek Road) Volusia County, Florida	**Exhibit** **7.2**

City of Port Orange c/o Valerie Duhl SAJ-2024-02331 (Sheet 3 of 11)

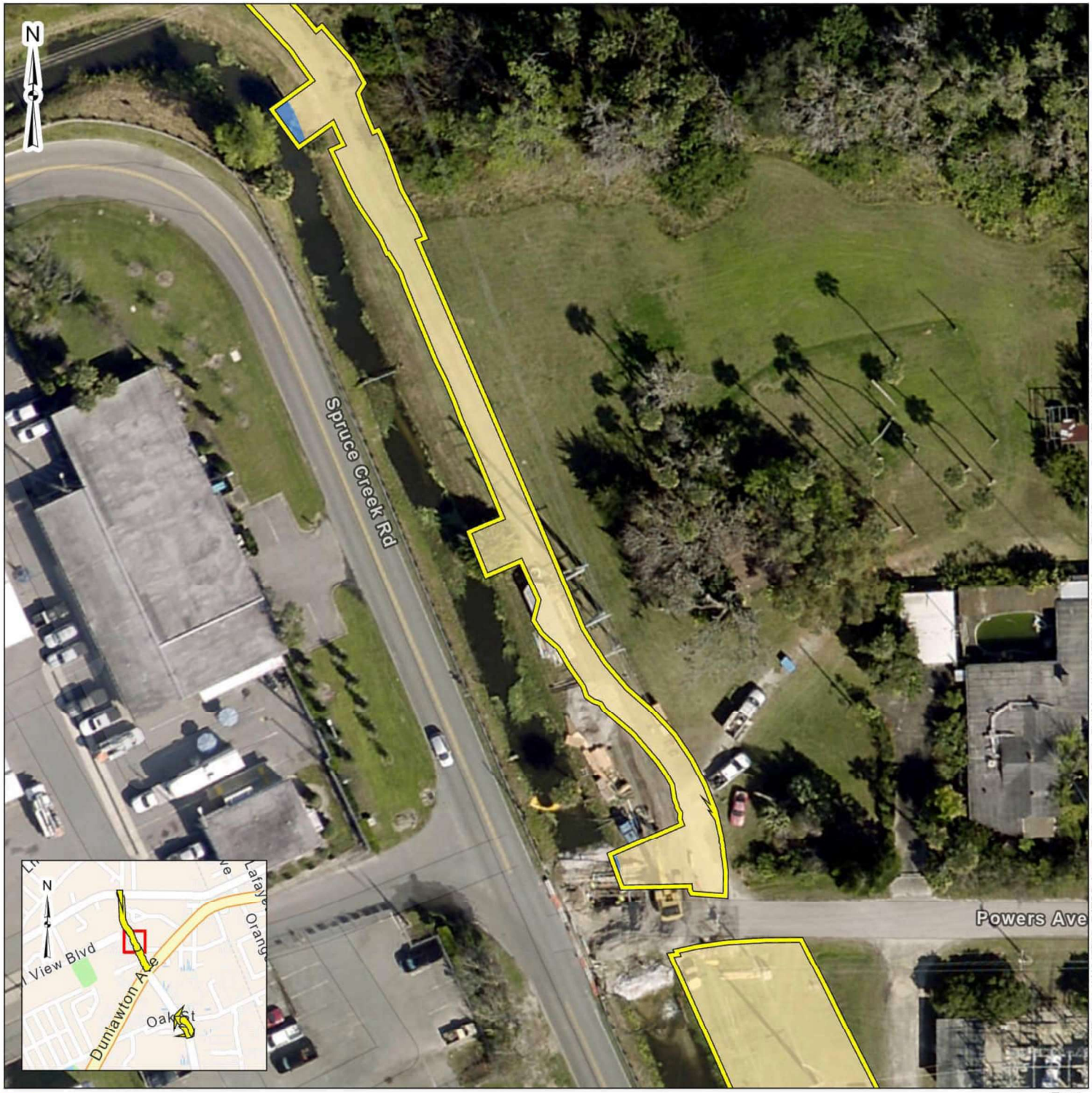

Project Areas (Construction Limits) (1.42 ac.±)
Uplands (0.92 ac.±)
Wetlands (0.49 ac.±)
Other Surface Water (0.01 ac.±)

Feet
0 30 60 120

DATA SOURCES:
Terracon - Wetland Delineation; ESRI World Imagery Basemap & World Navigation Map

C:\GIS\Projects\H1217592_SJR2C_Loop_Trail_(Spruce_Creek_Rd)\Maps\H1217592_SJR2C_Loop_Trail_(Spruce_Creek_Rd)H1217592_SJR2C_Loop_Trail_(ERPsubmittal).aprx

Project No.: H1217592 Date: Sep 2023 Drawn By: GRS Reviewed By: BH	Terracon 1675 Lee Road Winter Park, FL 32789 PH. (407) 740-6110 terracon.com	**Wetland Delineation** Environmental Resource Permit SJR2C Loop Trail (Spruce Creek Road) Volusia County, Florida	**Exhibit** **7.3**

City of Port Orange c/o Valerie Duhl SAJ-2024-02331 (Sheet 4 of 11)

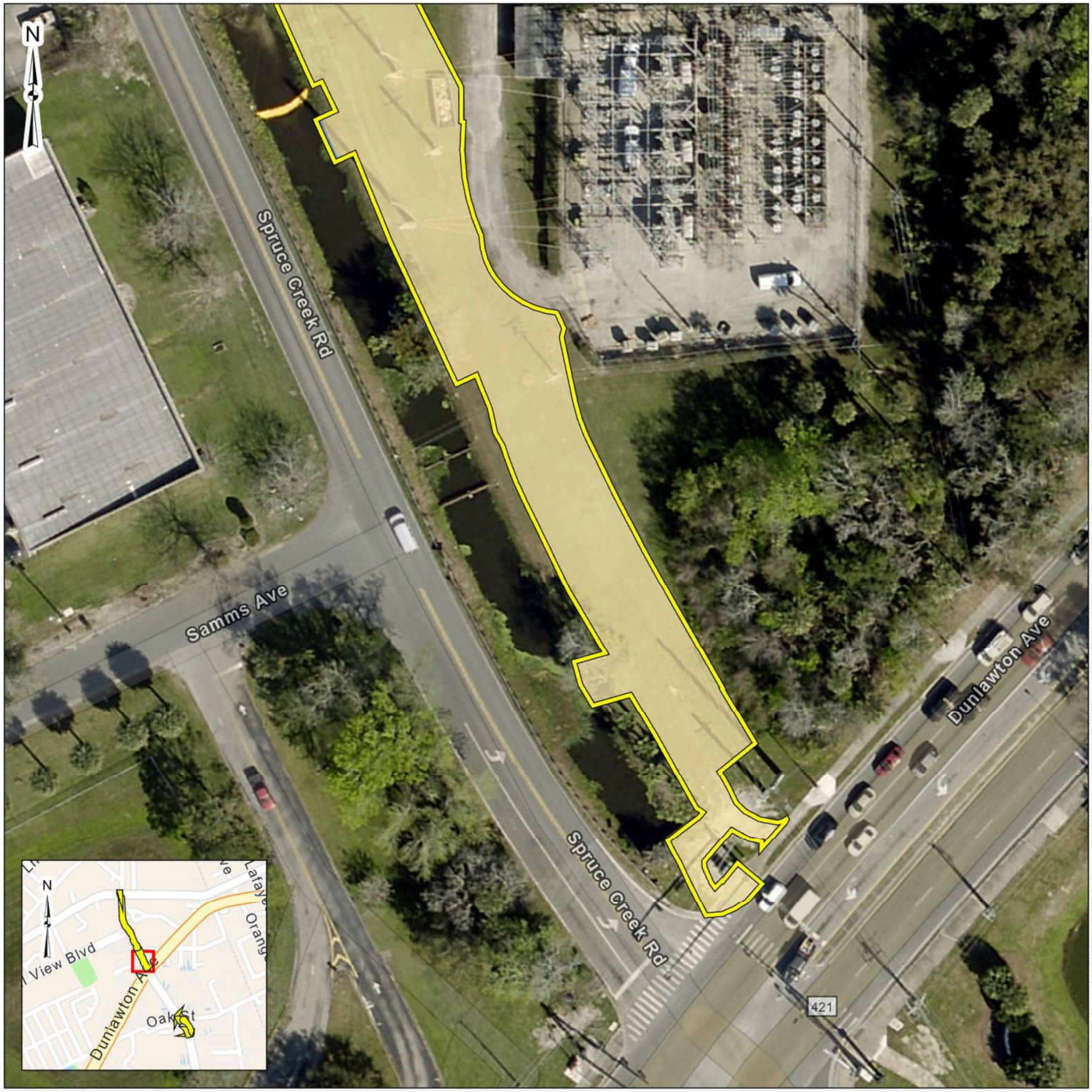

Project Areas (Construction Limits) (1.42 ac.±)
Uplands (0.92 ac.±)
Wetlands (0.49 ac.±)
Other Surface Water (0.01 ac.±)

Feet
0 30 60 120

DATA SOURCES:
Terracon - Wetland Delineation; ESRI World Imagery Basemap & World Navigation Map

C:\GIS\Projects\H1217592_SJR2C_Loop_Trail_(Spruce_Creek_Rd)\Maps\H1217592_SJR2C_Loop_Trail_(Spruce_Creek_Rd)H1217592_SJR2C_Loop_Trail_(ERPsubmittal).aprx

Project No.:	H1217592
Date:	Sep 2023
Drawn By:	GRS
Reviewed By:	BH

Terracon
1675 Lee Road Winter Park, FL 32789
PH. (407) 740-6110 terracon.com

Wetland Delineation

Environmental Resource Permit
SJR2C Loop Trail (Spruce Creek Road)
Volusia County, Florida

Exhibit

7.4

City of Port Orange c/o Valerie Duhl SAJ-2024-02331 (Sheet 5 of 11)



Project Areas (Construction Limits) (1.42 ac.±)
Uplands (0.92 ac.±)
Wetlands (0.49 ac.±)
Other Surface Water (0.01 ac.±)

Feet
0 30 60 120

DATA SOURCES:
Terracon - Wetland Delineation; ESRI World Imagery Basemap & World Navigation Map

C:\GIS\Projects\H1217592_SJR2C_Loop_Trail_(Spruce_Creek_Rd)\Maps\H1217592_SJR2C_Loop_Trail_(Spruce_Creek_Rd)H1217592_SJR2C_Loop_Trail_(ERPSubmittal).aprx

Project No.: H1217592 Date: Sep 2023 Drawn By: GRS Reviewed By: BH	Terracon 1675 Lee Road Winter Park, FL 32789 PH. (407) 740-6110 terracon.com	**Wetland Delineation** Environmental Resource Permit SJR2C Loop Trail (Spruce Creek Road) Volusia County, Florida	**Exhibit** **7.5**

City of Port Orange c/o Valerie Duhl SAJ-2024-02331 (Sheet 6 of 11)

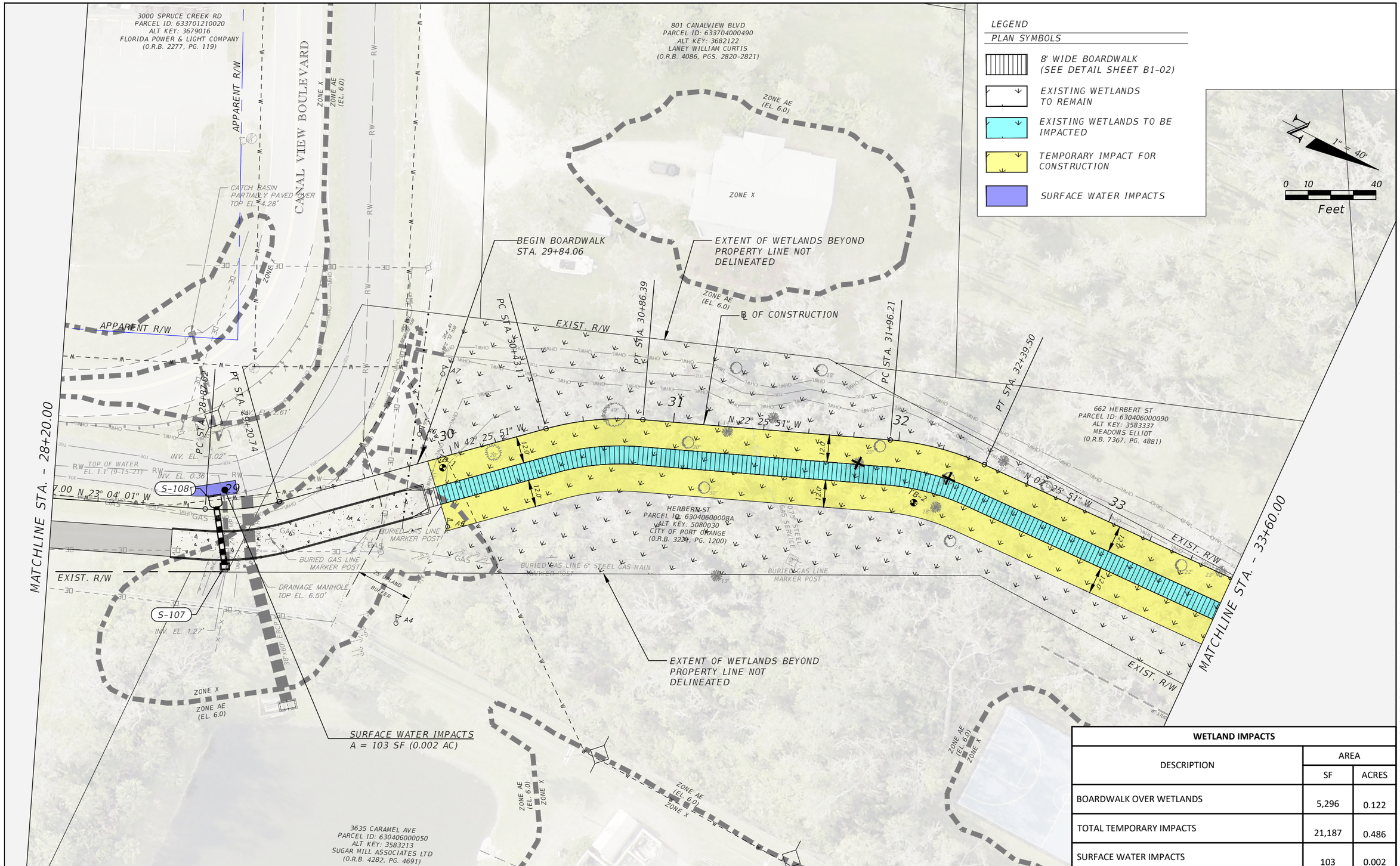

WETLAND IMPACTS		
DESCRIPTION	AREA	
	SF	ACRES
BOARDWALK OVER WETLANDS	5,296	0.122
TOTAL TEMPORARY IMPACTS	21,187	0.486
SURFACE WATER IMPACTS	103	0.002

THE OFFICIAL RECORD OF THIS SHEET IS THE ELECTRONIC FILE DIGITALLY SIGNED AND SEALED UNDER RULE 61G15-23.004, F.A.C.

REVISIONS	
DATE	DESCRIPTION

CITY OF PORT ORANGE
1000 CITY CENTER CIRCLE
PORT ORANGE, FL 32129

MERLYNN O. ANDERSON, P.E.
P.E. LICENSE NUMBER 83096

STANLEY CONSULTANTS, INC.
80 SPRING VISTA DRIVE
DEBARY, FL 32713

SJR2C LOOP TRAIL
FROM SOUTH OF SELIN CIR TO HERBERT ST

ROAD	COUNTY	FINANCIAL PROJECT ID
SPRUCE CREEK RD	VOLUSIA	439865-3-54-01

WETLAND IMPACTS

SHEET NO. 47

City of Port Orange c/o Valerie Duhl SA1-2024-02331 (Sheet 7 of 11)

O'Neill, Karen 2/13/2025 12:52:14 PM Z:\2016 Projects\10962 (Port Orange)\TWO 09 - SUNTrail (SJR2C Loop) Spruce Creek Rd\CAD\439865\Roadway\WETLAND IMPACTS_USACE.dwg

LEGEND

PLAN SYMBOLS

8' WIDE BOARDWALK (SEE DETAIL SHEET B1-02)

EXISTING WETLANDS TO REMAIN

EXISTING WETLANDS TO BE IMPACTED

TEMPORARY IMPACT FOR CONSTRUCTION

MATCHLINE STA. - 33+60.00

662 HERBERT ST
PARCEL ID: 630406000090
ALT KEY: 3583337
MEADOWS ELLIOT
(O.R.B. 7367, PG. 4881)

EXTENT OF WETLANDS BEYOND PROPERTY LINE NOT DELINEATED

℄ OF CONSTRUCTION

6TH ST
PARCEL ID: 630406000091
ALT KEY: 5578518
CITY OF PORT ORANGE
(O.R.B. 4060, PGS. 2312-2313)

END BOARDWALK
STA. 36+79.20

ZONE AE (EL. 6.0)

ZONE X

STA. 37+74.25 ℄ CONSTRUCTION =
STA. 4+89.39 ℄ HERBERT ST.

APPARENT R/W

HERBERT STREET

EXIST. R/W

SANITARY MANHOLE
TOP EL. 8.70'

℄ OF SIXTH ST.

8' CONC. SIDEWALK

N 02° 25' 51"W

EXIST. R/W

120'

120'

TB-3

HERBERT ST
PARCEL ID: 630406000008A
ALT KEY: 5080030
CITY OF PORT ORANGE
(O.R.B. 3221, PG. 1200)

25' UPLAND BUFFER

EXIST. R/W

TB-4

BURIED GAS LINE MARKER POST

BURIED GAS LINE MARKER POST

STA. 5+11.76 ℄ HERBERT ST. =
STA. 10+00.00 ℄ SIXTH ST.

6TH STREET

EXTENT OF WETLANDS BEYOND PROPERTY LINE NOT DELINEATED

3635 CARAMEL AVE
PARCEL ID: 630406000050
ALT KEY: 3583213
SUGAR MILL ASSOCIATES LTD
(O.R.B. 4282, PG. 4691)

ZONE AE (EL. 6.0)

ZONE X

654 HERBERT ST
PARCEL ID: 630406000080
ALT KEY: 3583329
KEPPER EILEEN A
(O.R.B. 4849, PGS. 2487-2488)

APPARENT R/W

657 HERBERT ST
PARCEL ID: 630409000530
ALT KEY: 4797769
FRAZIER SHAWN FRAIZER JARED
(O.R.B. 3394, PG. 166)

655 HERBERT ST
PARCEL ID: 630409000540
ALT KEY: 4797777
GN & TN LLC
(O.R.B. 6611, PG. 3648)

653 HERBERT ST
PARCEL ID: 630409000550
ALT KEY: 4797785
GN & TN LLC
(O.R.B. 6913, PG. 2839)

626 6TH ST
PARCEL ID: 630402190110
ALT KEY: 3582683
GENSLER BRENDA A
(O.R.B. 7575, PG. 2143)

1" = 40'

0 10 40
Feet

WETLAND IMPACTS

DESCRIPTION	AREA	
	SF	ACRES
BOARDWALK OVER WETLANDS	5,296	0.122
TOTAL TEMPORARY IMPACTS	21,187	0.486
SURFACE WATER IMPACTS	103	0.002

THE OFFICIAL RECORD OF THIS SHEET IS THE ELECTRONIC FILE DIGITALLY SIGNED AND SEALED UNDER RULE 61G15-23.004, F.A.C.

REVISIONS	
DATE	DESCRIPTION

CITY OF PORT ORANGE
1000 CITY CENTER CIRCLE
PORT ORANGE, FL 32129

MERLYNN O. ANDERSON, P.E.
P.E. LICENSE NUMBER 83096

STANLEY CONSULTANTS, INC.
80 SPRING VISTA DRIVE
DEBARY, FL 32713

SJR2C LOOP TRAIL
FROM SOUTH OF SELIN CIR TO HERBERT ST

ROAD	COUNTY	FINANCIAL PROJECT ID
SPRUCE CREEK RD	VOLUSIA	439865-3-54-01

WETLAND IMPACTS

SHEET NO. 48

City of Port Orange c/o Valerie Duhl SAJ-2024-02331 (Sheet 8 of 11)

O'Neill, Karen 2/13/2025 12:52:25 PM Z:\2016 Projects\10962 (Port Orange)\TWO 09 - SUNTrail (SJR2C Loop) Spruce Creek Rd\CAD\439865\Roadway\WETLAND IMPACTS_USACE.dwg

CURVE DATA ℄ CONSTRUCTION (C3)
PI STA. = 29+04.34
DELTA = 19° 21' 50"
D = 58° 27' 54"
T = 16.72
L = 33.12
R = 98.00
PC STA. = 28+87.62
PT STA. = 29+20.74

CURVE DATA ℄ CONSTRUCTION (C4)
PI STA. = 30+64.97
DELTA = 20° 00' 00"
D = 46° 12' 23"
T = 21.86
L = 43.28
R = 124.00
PC STA. = 30+43.11
PT STA. = 30+86.39

CONTRACTOR TO NOTIFY TECO GAS PRIOR TO ANY WORK NEAR EXISTING GAS MAINS AND SERVICE LINES

CURVE DATA ℄ CONSTRUCTION (C5)
PI STA. = 32+18.08
DELTA = 20° 00' 00"
D = 46° 12' 23"
T = 21.86
L = 43.28
R = 124.00
PC STA. = 31+96.21
PT STA. = 32+39.50

℄ CONSTRUCTION
EXIST. 0.75" GAS SERVICE LINE (APPROX. DEPTH 21")
EXIST. R/W
APPARENT R/W
CANAL VIEW BLVD.
CONST. 12' SIDEWALK
CONST. 12' HEAVY DUTY ASPHALT SUP
SPRUCE CREEK ROAD
PI STA. 27+20.00
PC STA. 28+87.62
PT STA. 29+20.74
PC STA. 30+43.11
PT STA. 30+86.39
PC STA. 31+96.21
PT STA. 32+39.50
N 22° 25' 51" W
N 42° 25' 51" W
N 02° 25' 51" W
MATCHLINE STA. - 33+20.00
1" = 40'
N

28+87.62
10.00 RT.
28+73.70
10.00 RT.
28
PI STA. 27+67.00
28+33.70
10.00 RT.
29+20.74
10.00 RT.
29+75.37
9.67 RT.
BEGIN BOARDWALK
STA. 29+84.06
29+63.40
10.00 RT.
29
30
31
32
33
C3
C4
C5
R108'
A4
A5
A6
18-1
18-2

BENT No 12
STA. 30+75.57
BENT No. 1
STA. 29+84.89
BENT No. 7
STA. 30+43.11
BENT No. 6
STA. 30+34.89
BENT No. 11
STA. 30+86.39
BENT No. 22
STA. 31+96.21
BENT No. 21
STA. 31+86.39
BENT No. 23
STA. 32+07.03
BENT No. 24
STA. 32+17.86
BENT No. 25
STA. 32+28.68
BENT No. 26
STA. 32+39.50
BENT No. 27
STA. 32+48.37
BENT No. 28
STA. 32+58.37

END RAILING
29+84.06
12.00 RT.
END RAILING
29+84.06
20.00 RT.
29+75.37
22.33 RT.

TREE REMOVAL (TYP.)
662 HERBERT ST
PARCEL ID: 630406000090
ALT KEY: 3583337
MEADOWS ELLIOT
(O.R.B. 7367, PG. 4881)
HERBERT ST
PARCEL ID: 63040600008A
ALT KEY: 5080030
CITY OF PORT ORANGE
(O.R.B. 3221, PG. 1200)
0.75" STEEL GAS SERVICE LINE
GAS LINE 6" STEEL GAS MAIN
BURIED GAS LINE MARKER POST
DRAINAGE MANHOLE TOP EL. 6.50'
25' UPLAND BUFFER
TOP OF WATER EL. 1.19
INV. EL. 0.36
MAX EL. 0.36
TBM 1383
EL. 5.215'
SET IRC
TRAV PT LB 7808
40' CROSS SLOPE TRANSITION (2.0% to 0.0%)
REMOVE 27 LF OF EXSIT. PIPE AND CONST. 29LF 24" PIPE @0.00%
S-107
STA 28+95.94 (25.25 Rt.)
CONST. INLET TYPE C
INDEX No. 425-052
FL 0.36 (24")
ADJUST MANHOLE TO FINISHED GRADE
S-108
STA 28+92.24 (-2.98 Lt.)
CONST. CD MES (1:2)
INDEX No. 430-021
FL 0.36 (24")
CONST. GRAVITY WALL A, SCHEME 1, WITH ALUMINUM PIPE GUIDERAIL
-2.00%
0.00%
ZONE AE (EL. 6.0)
ZONE X

LEGEND

PLAN SYMBOLS

4" THICK CONCRETE SIDEWALK (PER FDOT INDEX 522-001)

HEAVY DUTY ASPHALT SHARED USE PATH (SUP) (SEE DETAIL SHEET 11)

8' WIDE BOARDWALK (SEE DETAIL SHEET B1-02)

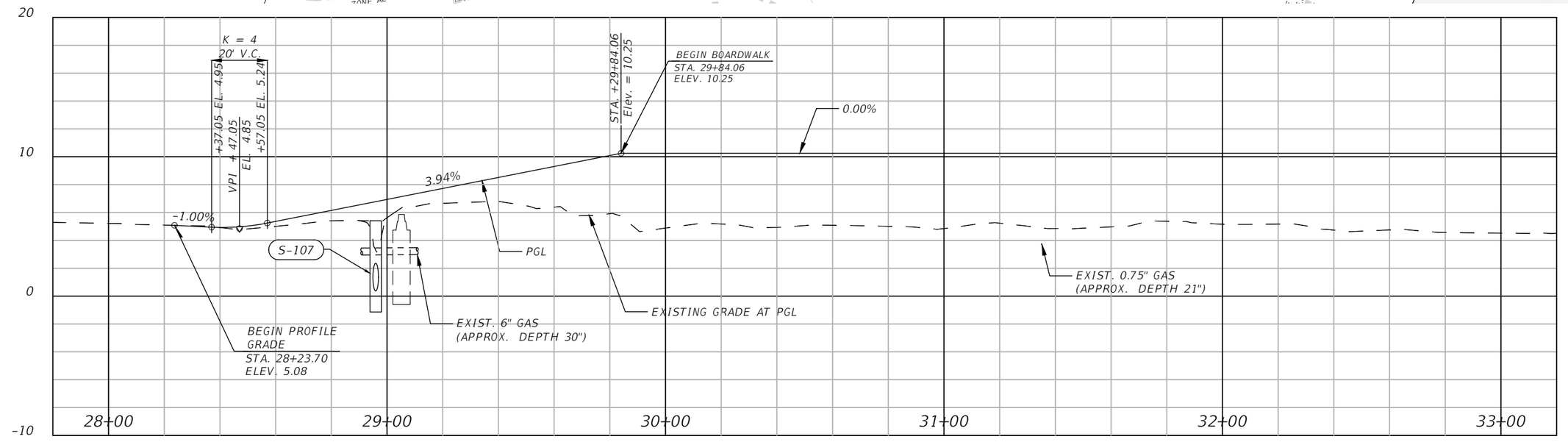

REVISIONS	
DATE	DESCRIPTION

CITY OF PORT ORANGE
1000 CITY CENTER CIRCLE
PORT ORANGE, FL 32129

MERLYNN O. ANDERSON, P.E.
P.E. LICENSE NUMBER 83096

STANLEY CONSULTANTS, INC.
80 SPRING VISTA DRIVE
DEBARY, FL 32713

SJR2C LOOP TRAIL
FROM SOUTH OF SELIN CIR TO HERBERT ST

ROAD	COUNTY	FINANCIAL PROJECT ID
SPRUCE CREEK RD	VOLUSIA	439865-3-54-01

ROADWAY PLAN AND PROFILE

SHEET NO. 16

City of Port Orange c/o Valerie Duhl SA 2024-02331 (Sheet 9 of 11)

O'Neill, Karen 4/29/2024 10:02:49 AM Z:\2016 Projects\10962 (Port Orange)\TWO 09 - SUNTrail (SJR2C Loop) Spruce Creek Rd\CAD\439865\Roadway\PLPRRD01.dwg

THE OFFICIAL RECORD OF THIS SHEET IS THE ELECTRONIC FILE DIGITALLY SIGNED AND SEALED UNDER RULE 61G15-23.004, F.A.C.

MATCHLINE STA. – 33+20.00

LEGEND

PLAN SYMBOLS

- CONCRETE REMOVAL
- 4" THICK CONCRETE SIDEWALK (PER FDOT INDEX 522-001)
- 6" THICK CONCRETE SIDEWALK/DRIVEWAY (PER FDOT INDEX 522-002)
- 8' WIDE BOARDWALK (SEE DETAIL SHEET B1-02)

℄ CONSTRUCTION

TREE REMOVAL (TYP.)

EXIST. R/W

BENT No. 40 STA. 33+78.37

BENT No. 50 STA. 34+78.37

BENT No. 60 STA. 35+78.37

BENT No. 70 STA. 36+78.37

END BOARDWALK STA. 36+79.20

CONST. GRAVITY WALL B, SCHEME 1, WITH ALUMINUM PIPE HANDRAIL

36+97.66 12.00 RT.

36+93.79 12.00 RT.

36+79.87 12.00 RT.

ZONE AE (EL 6.0)

ZONE X

6TH ST
PARCEL ID: 630406000091
ALT KEY: 5578518
CITY OF PORT ORANGE
(O.R.B. 4060, PGS. 2312-2313)

HERBERT ST
PARCEL ID: 630406000008A
ALT KEY: 5080030
CITY OF PORT ORANGE
(O.R.B. 3221, PG. 1200)

TB-3

TB-4

A1

A2

A3

25' UPLAND BUFFER

8' STUCCO WALL

7' CLF

4' CLF

SANITARY MANHOLE TOP EL. 8.70'

BURIED GAS LINE MARKER POST

1" = 40'

APPARENT R/W

HERBERT STREET

37+61.75 18.67 LT.

DETECTABLE WARNINGS (TYP.)

CONST. 8' SIDEWALK

37+42.36 11.29 LT.

R 45'

5.00%

-4.13%

37+25.97 1.98 RT.

REMOVE 8 LF EXIST. FENCE WITHIN EXIST. R/W

37+86.46 16.73 LT.

REMOVE EXIST. CONC.

CONST. 8' SIDEWALK

38+17.56 15.02 LT.

8" CONC. SIDEWALK

6TH STREET

END PROJECT STA. 38+17.56

655 HERBE
PARCEL ID: 630
ALT KEY: 4
GN & TN
(O.R.B. 6611,

653 HERBE
PARCEL ID: 630
ALT KEY: 47
GN & TN
(O.R.B. 6913, P

626 6TH ST
PARCEL ID: 630402190110
ALT KEY: 3582683
GENSLER BRENDA A
(O.R.B. 7575, PG. 2143)

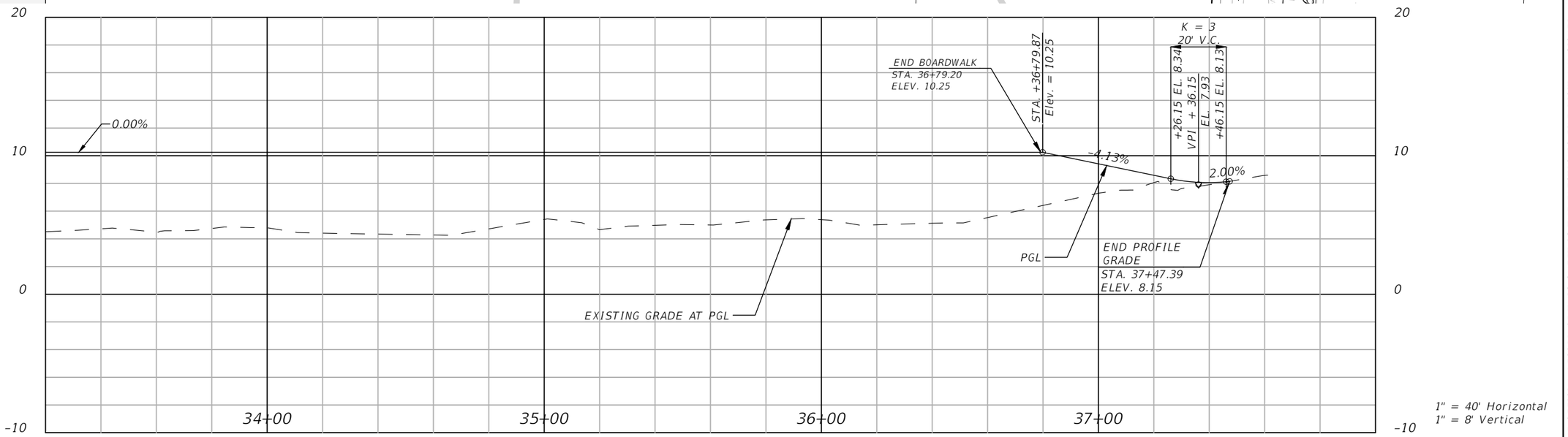

1" = 40' Horizontal
1" = 8' Vertical

REVISIONS	
DATE	DESCRIPTION

CITY OF PORT ORANGE
1000 CITY CENTER CIRCLE
PORT ORANGE, FL 32129

MERLYNN O. ANDERSON, P.E.
P.E. LICENSE NUMBER 83096

STANLEY CONSULTANTS, INC.
80 SPRING VISTA DRIVE
DEBARY, FL 32713

SJR2C LOOP TRAIL
FROM SOUTH OF SELIN CIR TO HERBERT ST

ROAD	COUNTY	FINANCIAL PROJECT ID
SPRUCE CREEK RD	VOLUSIA	439865-3-64-01

ROADWAY PLAN AND PROFILE

SHEET NO. 17

City of Port Orange c/o Valerie Duhl SAI-2024-02331 (Sheet 10 of 11)

O'Neill, Karen 4/29/2024 10:03:04 AM Z:\2016 Projects\10962 (Port Orange)\TWO 09 – SUNTrail (SJR2C Loop) Spruce Creek Rd\CAD\439865\Roadway\PLPRRD01.dwg

THE OFFICIAL RECORD OF THIS SHEET IS THE ELECTRONIC FILE DIGITALLY SIGNED AND SEALED UNDER RULE 61G15-23.004, F.A.C.

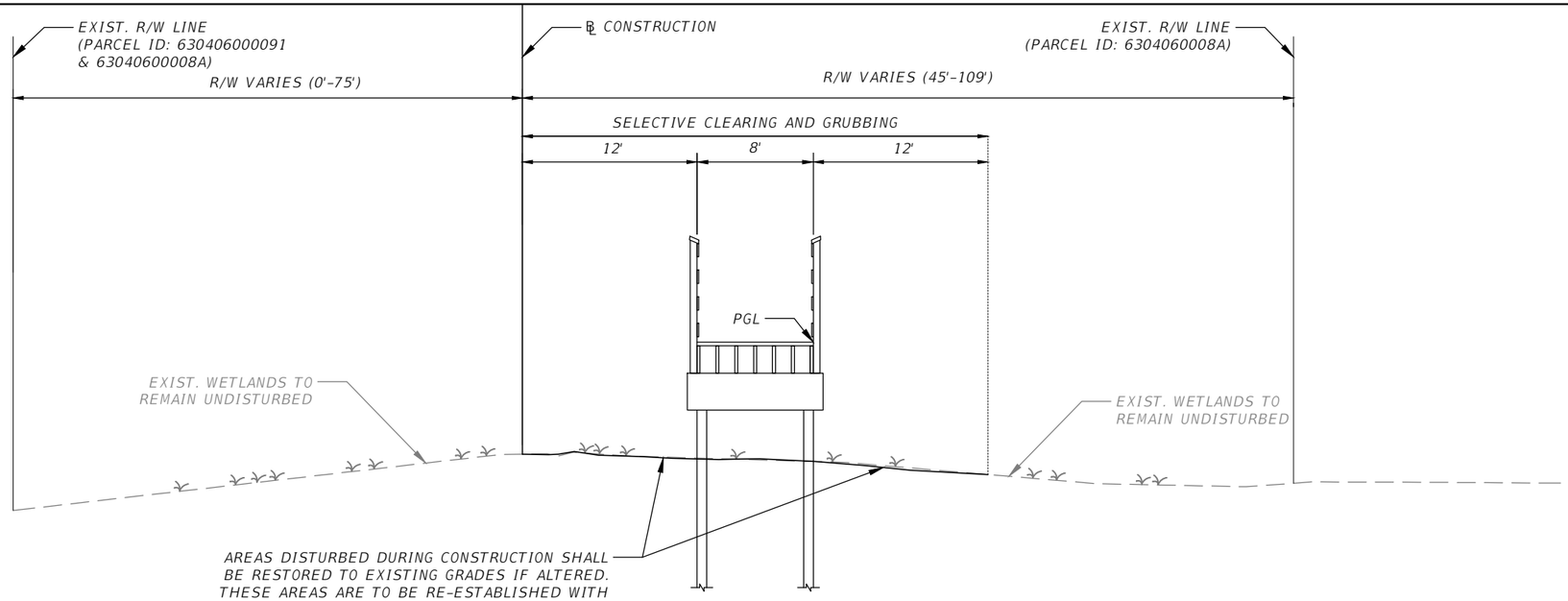

TYPICAL SECTION NO. 5
SPRUCE CREEK ROAD
STA. 29+84.06 TO STA. 36+79.20

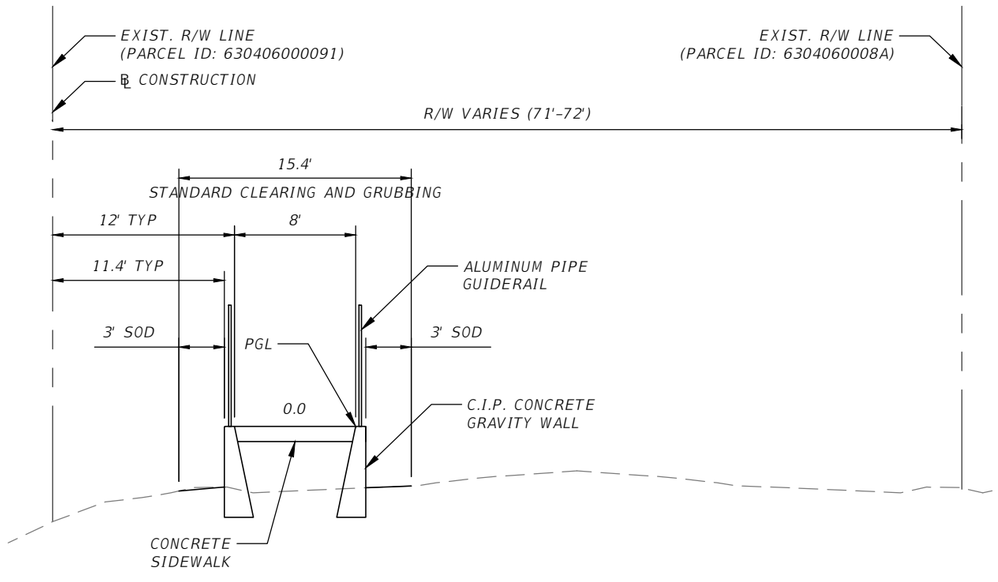

TYPICAL SECTION NO. 6
SPRUCE CREEK ROAD
STA. 36+79.20 TO STA. 36+93.79

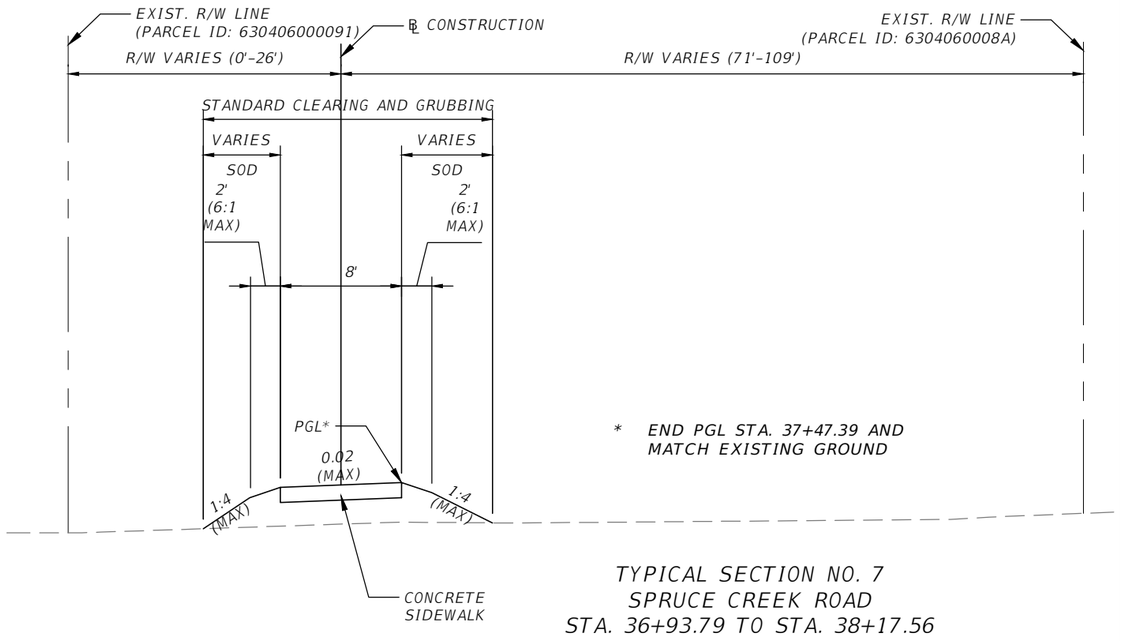

TYPICAL SECTION NO. 7
SPRUCE CREEK ROAD
STA. 36+93.79 TO STA. 38+17.56

THE OFFICIAL RECORD OF THIS SHEET IS THE ELECTRONIC FILE DIGITALLY SIGNED AND SEALED UNDER RULE 61G15-23.004, F.A.C.

REVISIONS	
DATE	DESCRIPTION

CITY OF PORT ORANGE
1000 CITY CENTER CIRCLE
PORT ORANGE, FL 32129

MERLYNN O. ANDERSON, P.E.
P.E. LICENSE NUMBER 83096

STANLEY CONSULTANTS, INC.
80 SPRING VISTA DRIVE
DEBARY, FL 32713

SJR2C LOOP TRAIL
FROM SOUTH OF SELIN CIR TO HERBERT ST

ROAD	COUNTY	FINANCIAL PROJECT ID
SPRUCE CREEK RD	VOLUSIA	439865-3-54-01

TYPICAL SECTION

SHEET NO. 10

City of Port Orange c/o Valerie Duhl SA-2024-02331 (Sheet 11 of 11)

St. Johns River
Water Management District
Michael A. Register, P.E., Executive Director

4049 Reid Street • P.O. Box 1429 • Palatka, FL 32178-1429 • 386-329-4500 • www.sjrwmd.com

August 16, 2024

Wayne Clarck
City of Port Orange
1000 City Center Cir
Port Orange, FL 32129-4144

SUBJECT: 29869-8
City of Port Orange - Multi-use Paths and Pedestrian Boardwalk

Dear Sir/Madam:

Enclosed is your individual permit issued by the St. Johns River Water Management District on August 16, 2024. This permit is a legal document and should be kept with your other important documents. Permit issuance does not relieve you from the responsibility of obtaining any necessary permits from any federal, state, or local agencies for your project.

Technical Staff Report:
If you wish to review a copy of the Technical Staff Report (TSR) that provides the District's staff analysis of your permit application, you may view the TSR by going to the Permitting section of the District's website at www.sjrwmd.com/permitting. Using the "search applications and permits" feature, you can use your permit number or project name to find information about the permit. When you see the results of your search, click on the permit number and then on the TSR folder.

Noticing Your Permit:
For noticing instructions, please refer to the noticing materials in this package regarding closing the point of entry for someone to challenge the issuance of your permit. Please note that if a timely petition for administrative hearing is filed, your permit will become non-final and any activities that you choose to undertake pursuant to your permit will be at your own risk. Please refer to the attached Notice of Rights to determine any legal rights you may have concerning the District's agency action.

Compliance with Permit Conditions:
To submit your required permit compliance information, go to the District's website at www.sjrwmd.com/permitting. Under the "Apply for a permit or submit compliance data" section, click to sign-in to your existing account or to create a new account. Select the "Compliance Submittal" tab, enter your permit number, and select "No Specific Date" for the Compliance Due Date Range. You will then be able to view all the compliance submittal requirements for your project. Select the compliance item that you are ready to submit and then attach the appropriate information or form. The forms to comply with your permit conditions are available at www.sjrwmd.com/permitting under the section "Handbooks, forms, fees, final orders". Click on forms to view all permit compliance forms, then scroll to the ERP application forms section and select the applicable compliance forms. Alternatively, if you have difficulty finding forms or need

GOVERNING BOARD

Rob Bradley, CHAIR FLEMING ISLAND
Maryam H. Ghyabi-White, VICE CHAIR ORMOND BEACH
J. Chris Peterson, SECRETARY WINTER PARK
Cole Oliver, TREASURER MERRITT ISLAND
Ryan Atwood MOUNT DORA
Doug Bournique VERO BEACH
Douglas Burnett ST. AUGUSTINE
Ron Howse COCOA
Janet Price FERNANDINA BEACH

copies of the appropriate forms, please contact the Bureau of Regulatory Support at (386) 329-4570.

Transferring Your Permit:
Your permit requires you to notify the District within 30 days of any change in ownership or control of the project or activity covered by the permit, or within 30 days of any change in ownership or control of the real property on which the permitted project or activity is located or occurs. You will need to provide the District with the information specified in rule 62-330.340, Florida Administrative Code (F.A.C.). Generally, this will require you to complete and submit Form 62-330.340(1), "Request to Transfer Permit," available at http://www.sjrwmd.com/permitting/permitforms.html.

Please note that a permittee is liable for compliance with the permit before the permit is transferred. The District, therefore, recommends that you request a permit transfer in advance in accordance with the applicable rules. You are encouraged to contact District staff for assistance with this process.

Thank you and please let us know if you have additional questions. For general questions contact e-permit@sjrwmd.com or (386) 329-4570.

Sincerely,

Michelle Reiber

Michelle Reiber, Bureau Chief
Division of Regulatory Services
St. Johns River Water Management District
525 Community College Parkway, S.E.
Palm Bay, FL 32909
(321) 409-2129

Enclosures: Permit
Notice of Rights
List of Newspapers for Publication

cc: District Permit File

Forest W Adkins
Stanley Consultants
80 Spring Vista Dr
DeBary, FL 32713-1821

Alexandra K Davis
DEP

Brett Anderson
Terracon Consultants, Inc.
8001 Baymeadows Way
Ste 1
Jacksonville, FL 32256-7521

ST. JOHNS RIVER WATER MANAGEMENT DISTRICT
Post Office Box 1429
Palatka, Florida 32178-1429

PERMIT NO: 29869-8 **DATE ISSUED:** August 16, 2024

PROJECT NAME: City of Port Orange - Multi-use Paths and Pedestrian Boardwalk

A PERMIT AUTHORIZING:
Modification of Permit Number IND-127-29869-6 for construction and operation of a Stormwater Management System for a 1.25-acre project known as City of Port Orange - Multi-use Paths and Pedestrian Boardwalk as per plans received by the District on May 13, 2024.

LOCATION:
Section(s): 4, 9 Township(s): 16S Range(s): 33E
Volusia County

Receiving Water Body:

Name	Class
Halifax Canal	Other/Unknown

ISSUED TO:
City of Port Orange
1000 City Center Cir
Port Orange, FL 32129-4144

The permittee agrees to hold and save the St. Johns River Water Management District and its successors harmless from any and all damages, claims, or liabilities which may arise from permit issuance. Said application, including all plans and specifications attached thereto, is by reference made a part hereof.

This permit does not convey to the permittee any property rights nor any rights or privileges other than those specified herein, nor relieve the permittee from complying with any law, regulation or requirement affecting the rights of other bodies or agencies. All structures and works installed by permittee hereunder shall remain the property of the permittee.

This permit may be revoked, modified or transferred at any time pursuant to the appropriate provisions of Chapter 373, Florida Statutes.

PERMIT IS CONDITIONED UPON:

See conditions on attached “Exhibit A”, dated August 16, 2024

AUTHORIZED BY: St. Johns River Water Management District
Division of Regulatory Services

By: Nicole Martin

Nicole Martin
Supervising Regulatory Scientist

"EXHIBIT A"
CONDITIONS FOR ISSUANCE OF PERMIT NUMBER 29869-8
City of Port Orange - Multi-use Paths and Pedestrian Boardwalk
DATED August 16, 2024

1. All activities shall be implemented following the plans, specifications and performance criteria approved by this permit. Any deviations must be authorized in a permit modification in accordance with Rule 62-330.315, F.A.C. Any deviations that are not so authorized may subject the permittee to enforcement action and revocation of the permit under Chapter 373, F.S.

2. A complete copy of this permit shall be kept at the work site of the permitted activity during the construction phase, and shall be available for review at the work site upon request by the District staff. The permittee shall require the contractor to review the complete permit prior to beginning construction.

3. Activities shall be conducted in a manner that does not cause or contribute to violations of state water quality standards. Performance-based erosion and sediment control best management practices shall be installed immediately prior to, and be maintained during and after construction as needed, to prevent adverse impacts to the water resources and adjacent lands. Such practices shall be in accordance with the State of Florida Erosion and Sediment Control Designer and Reviewer Manual (Florida Department of Environmental Protection and Florida Department of Transportation June 2007), and the Florida Stormwater Erosion and Sedimentation Control Inspector's Manual (Florida Department of Environmental Protection, Nonpoint Source Management Section, Tallahassee, Florida, July 2008), which are both incorporated by reference in subparagraph 62-330.050(9)(b)5, F.A.C., unless a project-specific erosion and sediment control plan is approved or other water quality control measures are required as part of the permit.

4. At least 48 hours prior to beginning the authorized activities, the permittee shall submit to the District a fully executed Form 62-330.350(1), "Construction Commencement Notice," (October 1, 2013) (http://www.flrules.org/Gateway/reference.asp?No=Ref-02505), incorporated by reference herein, indicating the expected start and completion dates. A copy of this form may be obtained from the District, as described in subsection 62-330.010(5), F.A.C., and shall be submitted electronically or by mail to the Agency. However, for activities involving more than one acre of construction that also require a NPDES stormwater construction general permit, submittal of the Notice of Intent to Use Generic Permit for Stormwater Discharge from Large and Small Construction Activities, DEP Form 62-621.300(4)(b), shall also serve as notice of commencement of construction under this chapter and, in such a case, submittal of Form 62-330.350(1) is not required.

5. Unless the permit is transferred under Rule 62-330.340, F.A.C., or transferred to an operating entity under Rule 62-330.310, F.A.C., the permittee is liable to comply with the plans, terms and conditions of the permit for the life of the project or activity.

6. Within 30 days after completing construction of the entire project, or any independent portion of the project, the permittee shall provide the following to the Agency, as applicable:

    a. For an individual, private single-family residential dwelling unit, duplex, triplex, or quadruplex — "Construction Completion and Inspection Certification for Activities Associated with a Private Single-Family Dwelling Unit" [Form 62-330.310(3)]; or

    b. For all other activities — "As-Built Certification and Request for Conversion to Operation Phase" [Form 62-330.310(1)].

c. If available, an Agency website that fulfills this certification requirement may be used in lieu of the form.

7. If the final operation and maintenance entity is a third party:

   a. Prior to sales of any lot or unit served by the activity and within one year of permit issuance, or within 30 days of as-built certification, whichever comes first, the permittee shall submit, as applicable, a copy of the operation and maintenance documents (see sections 12.3 thru 12.3.4 of Volume I) as filed with the Florida Department of State, Division of Corporations and a copy of any easement, plat, or deed restriction needed to operate or maintain the project, as recorded with the Clerk of the Court in the County in which the activity is located.

   b. Within 30 days of submittal of the as- built certification, the permittee shall submit "Request for Transfer of Environmental Resource Permit to the Perpetual Operation and Maintenance Entity" [Form 62-330.310(2)] to transfer the permit to the operation and maintenance entity, along with the documentation requested in the form. If available, an Agency website that fulfills this transfer requirement may be used in lieu of the form.

8. The permittee shall notify the District in writing of changes required by any other regulatory District that require changes to the permitted activity, and any required modification of this permit must be obtained prior to implementing the changes.

9. This permit does not:

   a. Convey to the permittee any property rights or privileges, or any other rights or privileges other than those specified herein or in Chapter 62-330, F.A.C.;

   b. Convey to the permittee or create in the permittee any interest in real property;

   c. Relieve the permittee from the need to obtain and comply with any other required federal, state, and local authorization, law, rule, or ordinance; or

   d. Authorize any entrance upon or work on property that is not owned, held in easement, or controlled by the permittee.

10. Prior to conducting any activities on state-owned submerged lands or other lands of the state, title to which is vested in the Board of Trustees of the Internal Improvement Trust Fund, the permittee must receive all necessary approvals and authorizations under Chapters 253 and 258, F.S. Written authorization that requires formal execution by the Board of Trustees of the Internal Improvement Trust Fund shall not be considered received until it has been fully executed.

11. The permittee shall hold and save the District harmless from any and all damages, claims, or liabilities that may arise by reason of the construction, alteration, operation, maintenance, removal, abandonment or use of any project authorized by the permit.

12. The permittee shall notify the District in writing:

    a. Immediately if any previously submitted information is discovered to be inaccurate; and

    b. Within 30 days of any conveyance or division of ownership or control of the property or the system, other than conveyance via a long-term lease, and the new owner shall

request transfer of the permit in accordance with Rule 62-330.340, F.A.C. This does not apply to the sale of lots or units in residential or commercial subdivisions or condominiums where the stormwater management system has been completed and converted to the operation phase.

13. Upon reasonable notice to the permittee, District staff with proper identification shall have permission to enter, inspect, sample and test the project or activities to ensure conformity with the plans and specifications authorized in the permit.

14. If prehistoric or historic artifacts, such as pottery or ceramics, projectile points, stone tools, dugout canoes, metal implements, historic building materials, or any other physical remains that could be associated with Native American, early European, or American settlement are encountered at any time within the project site area, the permitted project shall cease all activities involving subsurface disturbance in the vicinity of the discovery. The permittee or other designee shall contact the Florida Department of State, Division of Historical Resources, Compliance Review Section (DHR), at (850) 245-6333, as well as the appropriate permitting agency office. Project activities shall not resume without verbal or written authorization from the Division of Historical Resources. If unmarked human remains are encountered, all work shall stop immediately and the proper authorities notified in accordance with Section 872.05, F.S. For project activities subject to prior consultation with the DHR and as an alternative to the above requirements, the permittee may follow procedures for unanticipated discoveries as set forth within a cultural resources assessment survey determined complete and sufficient by DHR and included as a specific permit condition herein.

15. Any delineation of the extent of a wetland or other surface water submitted as part of the permit application, including plans or other supporting documentation, shall not be considered binding unless a specific condition of this permit or a formal determination under Rule 62-330.201, F.A.C., provides otherwise.

16. The permittee shall provide routine maintenance of all components of the stormwater management system to remove trapped sediments and debris. Removed materials shall be disposed of in a landfill or other uplands in a manner that does not require a permit under Chapter 62-330, F.A.C., or cause violations of state water quality standards.

17. This permit is issued based on the applicant's submitted information that reasonably demonstrates that adverse water resource-related impacts will not be caused by the completed permit activity. If any adverse impacts result, the District will require the permittee to eliminate the cause, obtain any necessary permit modification, and take any necessary corrective actions to resolve the adverse impacts.

18. A Recorded Notice of Environmental Resource Permit may be recorded in the county public records in accordance with Rule 62-330.090(7), F.A.C. Such notice is not an encumbrance upon the property.

19. This permit for construction will expire five years from the date of issuance.

20. All wetland areas or water bodies that are outside the specific limits of construction authorized by this permit must be protected from erosion, siltation, scouring or excess turbidity, and dewatering.

21. This permit does not authorize the permittee to cause any adverse impact to or "take" of state listed species and other regulated species of fish and wildlife. Compliance with state laws regulating the take of fish and wildlife is the responsibility of the owner or applicant associated with this project. Please refer to Chapter 68A-27 of the Florida Administrative Code for definitions of "take" and a list of fish and wildlife species. If listed species are

observed onsite, FWC staff are available to provide decision support information or assist in obtaining the appropriate FWC permits. Most marine endangered and threatened species are statutorily protected and a “take” permit cannot be issued. Requests for further information or review can be sent to FWCConservationPlanningServices@MyFWC.com.

22. Before the start of any construction, the permittee must provide the District with documentation demonstrating that 0.14 Freshwater Forested Wetland mitigation credits have been debited from the Port Orange Forested Freshwater Mitigation Bank ledger.

23. In the event that the permittee does not successfully complete the transaction to obtain 0.14 Freshwater Forested Wetland UMAM mitigation credits from Port Orange Forested Freshwater Mitigation Bank, the permittee must obtain a permit modification to provide alternative mitigation.

24. The proposed project must be constructed and operated as per plans received by the District on May 13, 2024.

Notice Of Rights

1. A person whose substantial interests are or may be affected has the right to request an administrative hearing by filing a written petition with the St. Johns River Water Management District (District). Pursuant to Chapter 28-106 and Rule 40C-1.1007, Florida Administrative Code, the petition must be filed (received) either by delivery at the office of the District Clerk at District Headquarters, P. O. Box 1429, Palatka Florida 32178-1429 (4049 Reid St., Palatka, FL 32177) or by e-mail with the District Clerk at Clerk@sjrwmd.com, within twenty-six (26) days of the District depositing the notice of District decision in the mail (for those persons to whom the District mails actual notice), within twenty-one (21) days of the District emailing the notice of District decision (for those persons to whom the District emails actual notice), or within twenty-one (21) days of newspaper publication of the notice of District decision (for those persons to whom the District does not mail or email actual notice). A petition must comply with Sections 120.54(5)(b)4. and 120.569(2)(c), Florida Statutes, and Chapter 28-106, Florida Administrative Code. The District will not accept a petition sent by facsimile (fax), as explained in paragraph no. 4 below.

2. Please be advised that if you wish to dispute this District decision, mediation may be available and that choosing mediation does not affect your right to an administrative hearing. If you wish to request mediation, you must do so in a timely-filed petition. If all parties, including the District, agree to the details of the mediation procedure, in writing, within 10 days after the time period stated in the announcement for election of an administrative remedy under Sections 120.569 and 120.57, Florida Statutes, the time limitations imposed by Sections 120.569 and 120.57, Florida Statutes, shall be tolled to allow mediation of the disputed District decision. The mediation must be concluded within 60 days of the date of the parties' written agreement, or such other timeframe agreed to by the parties in writing. Any mediation agreement must include provisions for selecting a mediator, a statement that each party shall be responsible for paying its pro-rata share of the costs and fees associated with mediation, and the mediating parties' understanding regarding the confidentiality of discussions and documents introduced during mediation. If mediation results in settlement of the administrative dispute, the District will enter a final order consistent with the settlement agreement. If mediation terminates without settlement of the dispute, the District will notify all the parties in writing that the administrative hearing process under Sections 120.569 and 120.57, Florida Statutes, is resumed. Even if a party chooses not to engage in formal mediation, or if formal mediation does not result in a settlement agreement, the District will remain willing to engage in informal settlement discussions.

3. A person whose substantial interests are or may be affected has the right to an informal administrative hearing pursuant to Sections 120.569 and 120.57(2), Florida Statutes, where no material facts are in dispute. A petition for an informal hearing must also comply with the requirements set forth in Rule 28-106.301, Florida Administrative Code.

Notice Of Rights

4. A petition for an administrative hearing is deemed filed upon receipt of the complete petition by the District Clerk at the District Headquarters in Palatka, Florida during the District's regular business hours. The District's regular business hours are 8:00 a.m. – 5:00 p.m., excluding weekends and District holidays. Petitions received by the District Clerk after the District's regular business hours shall be deemed filed as of 8:00 a.m. on the District's next regular business day. The District's acceptance of petitions filed by e-mail is subject to certain conditions set forth in the District's Statement of Agency Organization and Operation (issued pursuant to Rule 28-101.001, Florida Administrative Code), which is available for viewing at *sjrwmd.com*. These conditions include, but are not limited to, the petition being in the form of a PDF or TIFF file and being capable of being stored and printed by the District. Further, pursuant to the District's Statement of Agency Organization and Operation, attempting to file a petition by facsimile is prohibited and shall not constitute filing.

5. Failure to file a petition for an administrative hearing within the requisite timeframe shall constitute a waiver of the right to an administrative hearing. (Rule 28-106.111, Florida Administrative Code).

6. The right to an administrative hearing and the relevant procedures to be followed are governed by Chapter 120, Florida Statutes, Chapter 28-106, Florida Administrative Code, and Rule 40C-1.1007, Florida Administrative Code. Because the administrative hearing process is designed to formulate final agency action, the filing of a petition means the District's final action may be different from the position taken by it in this notice. A person whose substantial interests are or may be affected by the District's final action has the right to become a party to the proceeding, in accordance with the requirements set forth above.

7. Pursuant to Section 120.68, Florida Statutes, a party to the proceeding before the District who is adversely affected by final District action may seek review of the action in the District Court of Appeal by filing a notice of appeal pursuant to Rules 9.110 and 9.190, Florida Rules of Appellate Procedure, within 30 days of the rendering of the final District action.

8. A District action is considered rendered, as referred to in paragraph no. 7 above, after it is signed on behalf of the District and filed by the District Clerk.

9. Failure to observe the relevant timeframes for filing a petition for judicial review as described in paragraph no. 7 above will result in waiver of that right to review.

NOTICING INFORMATION

Please be advised that the St. Johns River Water Management District will not publish a notice in the newspaper advising the public that it has issued a permit for this project.

Newspaper publication, using the District's notice form, notifies members of the public of their right to challenge the issuance of the permit. If proper notice is given by newspaper publication, then there is a 21-day time limit for someone to file a petition for an administrative hearing to challenge the issuance of the permit.

To close the point of entry for filing a petition, you may publish (at your own expense) a one-time notice of the District's decision in a newspaper of general circulation within the affected area as defined in Section 50.011 of the Florida Statutes. If you do not publish a newspaper notice to close the point of entry, the time to challenge the issuance of your permit will not expire and someone could file a petition even after your project is constructed.

A copy of the notice form and a partial list of newspapers of general circulation are attached for your convenience. However, you are not limited to those listed newspapers. If you choose to close the point of entry and the notice is published, the newspaper will return to you an affidavit of publication. In that event, it is important that you either submit a scanned copy of the affidavit by emailing it to *compliancesupport@sjrwmd.com* (preferred method) **or** send a copy of the original affidavit to:

Office of Records and Regulatory Support
4049 Reid Street
Palatka, FL 32177

If you have any questions, please contact the Office of Records and Regulatory Support at (386) 329-4570.

NOTICE OF AGENCY ACTION TAKEN BY THE
ST. JOHNS RIVER WATER MANAGEMENT DISTRICT

Notice is given that the following permit was issued on _____:

(Name and address of applicant) _____
permit#_____. The project is located in _____County, Section _____, Township _____ South, Range _____ East. The permit authorizes a surface water management system on _____ acres for _____ known as _____. The receiving water body is _____.

A person whose substantial interests are or may be affected has the right to request an administrative hearing by filing a written petition with the St. Johns River Water Management District (District). Pursuant to Chapter 28-106 and Rule 40C-1.1007, Florida Administrative Code (F.A.C.), the petition must be filed (received) either by delivery at the office of the District Clerk at District Headquarters, P.O. Box 1429, Palatka FL 32178-1429 (4049 Reid St, Palatka, FL 32177) or by e-mail with the District Clerk at Clerk@sjrwmd.com, within twenty-one (21) days of newspaper publication of the notice of District decision (for those persons to whom the District does not mail or email actual notice). A petition must comply with Sections 120.54(5)(b)4. and 120.569(2)(c), Florida Statutes (F.S.), and Chapter 28-106, F.A.C. The District will not accept a petition sent by facsimile (fax). Mediation pursuant to Section 120.573, F.S., may be available and choosing mediation does not affect your right to an administrative hearing.

A petition for an administrative hearing is deemed filed upon receipt of the complete petition by the District Clerk at the District Headquarters in Palatka, Florida during the District's regular business hours. The District's regular business hours are 8 a.m. – 5 p.m., excluding weekends and District holidays. Petitions received by the District Clerk after the District's regular business hours shall be deemed filed as of 8 a.m. on the District's next regular business day. The District's acceptance of petitions filed by e-mail is subject to certain conditions set forth in the District's Statement of Agency Organization and Operation (issued pursuant to Rule 28-101.001, Florida Administrative Code), which is available for viewing at www.sjrwmd.com. These conditions include, but are not limited to, the petition being in the form of a PDF or TIFF file and being capable of being stored and printed by the District. Further, pursuant to the District's Statement of Agency Organization and Operation, attempting to file a petition by facsimile (fax) is prohibited and shall not constitute filing.

The right to an administrative hearing and the relevant procedures to be followed are governed by Chapter 120, Florida Statutes, Chapter 28-106, Florida Administrative Code, and Rule 40C-1.1007, Florida Administrative Code. Because the administrative hearing process is designed to formulate final agency action, the filing of a petition means the District's final action may be different from the position taken by it in this notice. **Failure to file a petition for an administrative hearing within the requisite time frame shall constitute a waiver of the right to an administrative hearing. (Rule 28-106.111, F.A.C.).**

If you wish to do so, please visit http://www.sjrwmd.com/nor_dec/ to read the complete Notice of Rights to determine any legal rights you may have concerning the District's decision(s) on the permit application(s) described above. You can also request the Notice of Rights by contacting the Director of Office of Records and Regulatory Support, 4049 Reid St., Palatka, FL 32177-2529, tele. no. (386)329-4570.

NEWSPAPER ADVERTISING

ALACHUA
Gainesville Sun, Legal Advertising
2700 SW 13th Street
Gainesville, FL 32608
866-858-9652

BAKER
Baker County Press, Legal Advertising
P. O. Box 598
Macclenny, FL 3206 3
904-259-2400/ fax 904-259-6502

BRADFORD
Bradford County Telegraph, Legal Advertising
P. O. Drawer A
Starke, FL 32901
904-964-6305/ fax 904-964-8628

BREVARD
Florida Today, Legal Advertising
P. O. Box 419000
Melbourne, FL 32941-9000
321-242-3832/ fax 321-242-6618

CLAY
Clay Today, Legal Advertising
1560 Kinsley Ave., Suite 1
Orange Park, FL 32073
904-264-3200/ fax 904-264-3285

DUVAL
Daily Record, Legal Advertising
P. O. Box 1769
Jacksonville, FL 32201
904-356-2466 / fax 904-353-2628

FLAGLER
Flagler Tribune, c/o News Journal
P. O. Box 2831
Daytona Beach, FL 32120-2831
386- 681-2322

INDIAN RIVER
Treasure Coast News
760 NW Enterprise Dr.
Port St. Lucie, FL 34986
772-283-5252

LAKE
Daily Commercial, Legal Advertising
P. O. Drawer 490007
Leesburg, FL 34749
352-365-8235/fax 352-365-1951

MARION
Ocala Star Banner, Legal Advertising
2121 SW 19th Avenue Road
Ocala, FL 34474
352-867-4010/fax 352-867-4126

NASSAU
News-Leader, Legal Advertising
P. O. Box 766
Fernandina Beach, FL 32035
904-261-3696/fax 904-261-3698

OKEECHOBEE
Okeechobee News, Legal Advertising
P. O. Box 639
Okeechobee, FL 34973-0639
863-763-3134/fax 863-763-5901

ORANGE
Sentinel Communications, Legal Advertising
633 N. Orange Avenue
Orlando, FL 32801
407-420-5160/ fax 407-420-5011

OSCEOLA
Little Sentinel, Legal Advertising
633 N. Orange Avenue
Orlando, FL 32801
407-420-5160/ fax 407-420-5011

PUTNAM
Palatka Daily News, Legal Advertising
P. O. Box 777
Palatka, FL 32178
386-312-5200/ fax 386-312-5209

ST. JOHNS
St. Augustine Record, Legal Advertising
P. O. Box 1630
St. Augustine, FL 32085
904-819-3439

SEMINOLE
Sanford Herald, Legal Advertising
300 North French Avenue
Sanford, FL 32771
407-323-9408

VOLUSIA
News Journal Corporation, Legal Advertising
P. O. Box 2831
Daytona Beach, FL 32120-2831
(386) 681-2322

CITY OF PORT ORANGE
PURCHASING DIVISION
1000 CITY CENTER CIRCLE
PORT ORANGE, FLORIDA 32129
TELEPHONE 386-506-5740
purchdiv@port-orange.org

ADDENDUM #1
June 2, 2025

ITB #25-13 439865-3-54-01 SJR2C Loop Trail (Spruce Creek Rd.) From South of Selin Circle to Herbert Street

---

To All Respondents:
The following changes, clarifications and additions are hereby made part of the ITB for the above referenced project dated May 30, 2025 and prepared by the City of Port Orange Purchasing Division as fully and completely as if the same were fully set forth therein. It is the sole responsibility of the respondent to confirm that all addenda have been received prior to submitting a bid and acknowledge such in the ITB documents.

A. **CLARIFICATIONS:**
N/A

B. **CHANGES TO SPECIFICATIONS:**
REVISED SJR2C Loop Trail (Spruce Creek Rd.) Plans hereby replaces the original file SJR2C Loop Trail (Spruce Creek Rd.) Plans and is posted as a separate document on https://www.port-orange.org/bids.aspx?bidID=223 and www.demandstar.com.

C. **QUESTIONS AND ANSWERS:**
N/A

In all other respects, except as specifically stated herein, the subject *ITB #25-13 439865-3-54-01 SJR2C Loop Trail (Spruce Creek Rd.) From South of Selin Circle to Herbert Street* remains unchanged.

END OF ADDENDUM #1

CITY OF PORT ORANGE
PURCHASING DIVISION
1000 CITY CENTER CIRCLE
PORT ORANGE, FLORIDA 32129
TELEPHONE 386-506-5718
purchdiv@port-orange.org

ADDENDUM #2
June 20, 2025

ITB #25-13 439865-3-54-01 SJR2C Loop Trail (Spruce Creek Rd.) From South of Selin Circle to Herbert Street

---

To All Bidders:
The following changes, clarifications and additions are hereby made part of the ITB for the above referenced project dated May 30, 2025 and prepared by the City of Port Orange Purchasing Division as fully and completely as if the same were fully set forth therein. It is the sole responsibility of the bidder to confirm that all addenda have been received prior to submitting a bid and acknowledge such in the ITB documents.

A. CLARIFICATIONS:
None

B. CHANGES TO ITB DOCUMENT:
None

C. QUESTIONS AND ANSWERS:

Question #1
Do Davis-Bacon Wages apply to this project?
Answer #1
No.

Question #2
How high should the canpy be cleared for the length of the boardwalk?
Answer #2
Final tree trimming is required to 15’ clearance above the boardwalk.

Question #3
What pay item should include the removal of existing pipes and end treatments?
Answer #3
The removal of the existing pipes and end treatments should be included under Pay Item 0110 1 1 CLEARING AND GRUBBING. Per FDOT Specifications 430-12.2 the cost of excavating and removing the old pipe and of its disposal will be included in the contract unit price for Clearing and Grubbing. Per FDOT Specifications 110-2.1 Clearing and Grubbing includes the removal and disposal of drainage structures.

Question #4
What are the approved "optional materials" for all pipe culverts listed on the bid form?
Answer #4
All proposed pipes are to be RCP.

Question #5
Is it the contractor's responsibility to furnish and install item # CITY-01 18" wapro stainless wastop inline check valve?
Answer #5
Yes

Question #6
Are there additional specs or details for furnishing and installing item # CITY-01 18" wapro stainless wastop inline check valve?
Answer #6
Additional details and specifications for the wapro stainless wastop inline check valve are attached to this addendum.

Question #7
Is Port Orange Utilities to provide all Utility Light Poles, Arms & Fixtures? Are they also going to install these Light Poles & Fixtures?
Answer #7
The power company FPL will provide and install all utility light poles, arms and fixtures for the roadway lighting.

Question #8
Is the Contractor to provide and install all underground conduit & wiring for the Utility Light Pole Fixtures? Or is this also to be done by Port Orange?
Answer #8
The power company FPL will provide and install all underground conduit and wiring for the roadway lighting.

Question #9
Are there any restrictions regarding underground conduit & wire that is to be run through intersections? Directional Bore required?
Answer #9
See answer to Question #8.

Question #10
Who is providing the Wood Posts & Post-Top Fixtures for the Boardwalk Lighting?
Answer #10
The Contractor will provide and install all lighting equipment for the boardwalk including the wood posts and post top fixtures. The power company FPL will provide service to the Service Point and the Contraoctor is responsible for all boardwalk lighting beyond that point.

Question #11
Who is providing the 3' x 6' Concrete Bases for the Wood Posts & Post-Top Fixtures (Boardwalk Lighting)?
Answer #11
The Contractor will provide and install all lighting equipment for the boardwalk including the 3' x 6' concrete bases, which are included under Pay Items 0715 516-513 and 0715 516-518.

Question #12
Is there a specification for the conduit & wiring methods used for the Boardwalk Lighting?
Answer #12
Conduit and Wiring methods should follow National Electrical Code (NEC) and FDOT standards.

Question #13
Can you please provide the engineer's cost estimate for this project?
Answer #13
$2,333,603.00

Question #14
Will design alternatives be accepted concerning the boardwalk construction?
Answer #14
Due to the process and timeframes involved in obtaining concurrence and the State's approved timeframe for construction, design alternatives for the boardwalk cannot be considered.

Question #15
Will the bid schedule be provided in Excel format?
Answer #15
No.

In all other respects, except as specifically stated herein, the subject ***ITB #25-13 439865-3-54-01 SJR2C Loop Trail (Spruce Creek Rd.) From South of Selin Circle to Herbert Street*** remains unchanged.

END OF ADDENDUM #2

WASTOP®



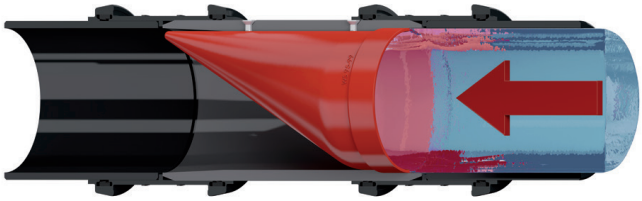

WASTOP® INLINE CHECK VALVE

We all know someone who has been affected by it. We see it, feel it and experience it. Climate change and rising sea levels are affecting us all. Through the innovation of WaStop Inline Check Valve, we at Wapro have prevented thousands of floods worldwide.

In order to protect against flooding, we have engineered the WaStop inline check valve to ensure the lowest possible opening pressure whilst maintaining the best possible seal against backflow. This, combined with the lowest headloss available, gives the most efficient flow conditions, ensuring the fastest evacuation of water. An essential quality of check valves used to protect people and property. WaStop protects.

ADVANTAGES OF WASTOP®

- Easy installation saving on construction & installation costs
- Superior construction materials
- Lowest headloss amongst inline check valves
- Low life cycle cost
- No moving parts - virtually maintenance-free
- Many dimensions 75-2000mm std & non-standard pipes
- Stops liquids, gases, odours, insects and small animals
- Stops backflow effectively even in low flow events

APPLICATIONS - WASTE WATER, SURFACE WATER, TIDAL AREAS

We at Wapro know that any solution for flood prevention or odour control needs to function. Simply, effectively. That's why, when we invented the WaStop inline check valve in 2000, we had one thought in mind. Instant automatic protection. Working on differential pressure the WaStop functions autonomously, without human interaction, without electricity, without constant maintenance. It just works.

To invent the best inline check valve on the market our engineers went one step further. We also thought about the different parts of the process and who would be affected by the design of the valve. With function top of mind our engineers developed a valve that works in stormwater, sewer, odour applications, as well as ensuring to cover the range of sizes of existing pipes to enable retro-fitting with ease. We cover all sizes of pipes, all shapes, from 75mm-2000mm. As standard. Off the shelf in most cases, for fast delivery. We keep stock to ensure the contractor and end user can keep time and costs to a minimum.



WASTOP®

BENEFITS OF SUPERIOR CONSTRUCTION

WaStop® is designed to provide asset and property owners' peace of mind. Simply the most reliable, high quality inline check valve on the market.

HOUSING & SEAL

- Thin stainless housing
- Perfect function regardless of the existing pipe quality
- Peace of mind knowing the seal is 100% tight
- Low life-cycle cost
- Lower energy costs
- Quick, easy installation

DOUBLE COLLARS

- Fast deliveries
- Easy installation for inlet or outlet installation
- Reduces costs by having one product for multiple installations situations
- Helps you meet your budget

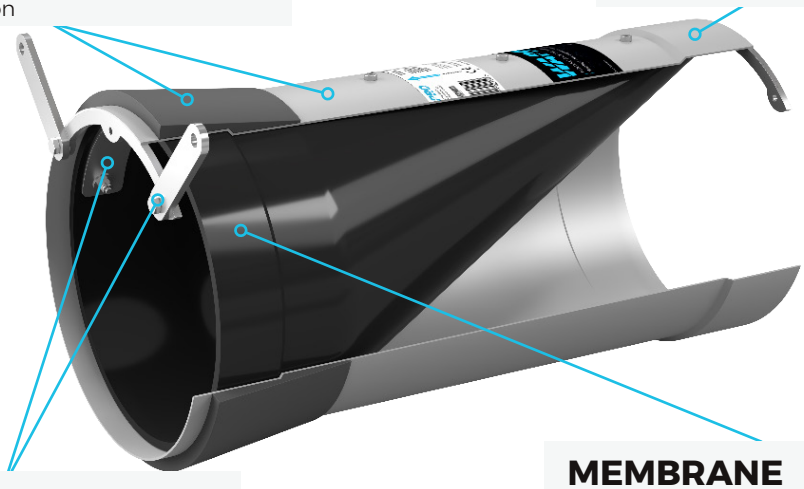

FIXATION MATERIAL

- Long life expectancy and low life-cycle cost with high quality materials
- Peace of mind - engineered product that exceeds expectations

MEMBRANE

- Protection even in low flow events
- Pulsating flow reducing sedimentation up and downstream
- Extremely low headloss
- Low maintenance costs
- Memory membrane - doesn't sag

THE VERSATILITY OF WASTOP®

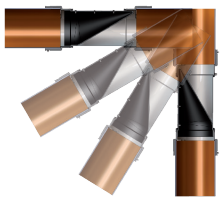

INLINE INSTALLATION

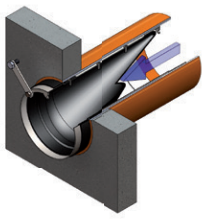

CHAMBER INSTALLATION

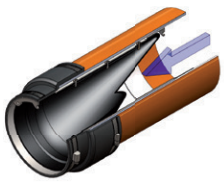

OUTLET INSTALLATION

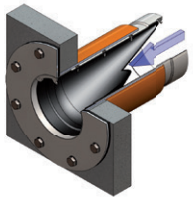

FLANGE INSTALLATION

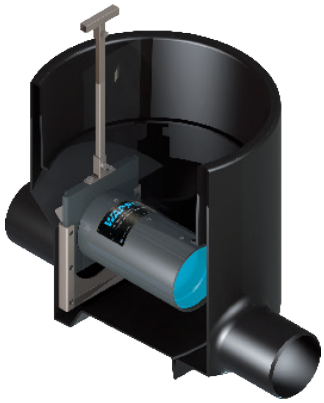

WASTOP® PRE-INSTALLED IN AN ACCESS CHAMBER

The WaStop Access Chamber provides you with peace of mind. Once installed the WaStop Access chamber provides complete protection against backflow in the sewer or combined sewer network. One ingenious product protects your basement or property from flooding caused by an overload or surcharge in the sewer system.

- Easy access from ground level
- Easy to inspect - simply lift manhole cover and pull up the WaStop module
- Delivered complete - inspection chamber and check valve in one

LOW HEAD LOSS IS ESSENTIAL

Comparing head loss data is difficult as the test procedure is rarely presented and there are multiple ways of altering data. However, the test results shown below were conducted in the same facility with the same reference points and are therefore comparable. The test result shows that the **WaStop has 65% lower head loss** than a competing inline check valve at flow 150l/s. Both valves were tested in the same open air scenario.

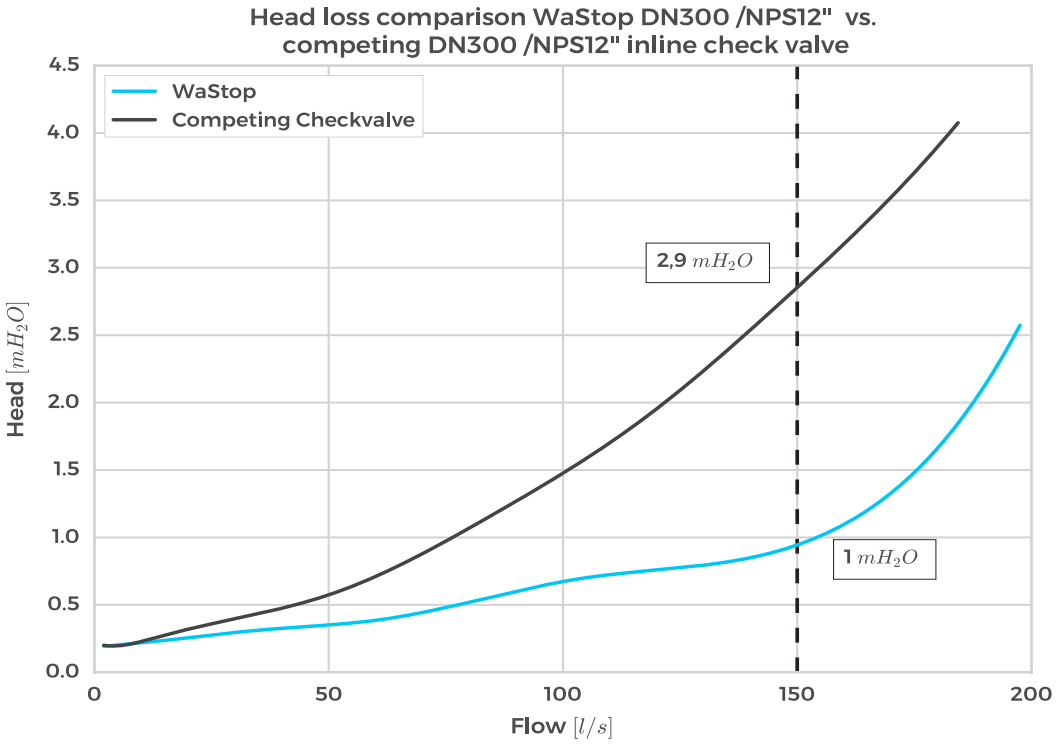

THE WIDEST RANGE OF SIZES TO SUIT ALL PIPES

We at Wapro know that there is a wide range of pipes available on the market, and that these pipes aren't always perfect. To ensure the valve we provide you with fits perfectly and protects 100% we've engineered the guess work out of it.

Keeping in line with our customer promise of commons sense and simplicity, we have developed a standard range of WaStop from DN75-2000mm. On top of this we have a Superior Fit Seal to ensure there is no leakage between the existing pipe and the WaStop inline check valve. We designed this seal to not only create the perfect fit, but also to ensure quick easy installation. Time is money.

All sizes are available in short versions or with flanges and can be customized to suit your needs. All WaStop standard valves are reversible for inlet or outlet installation and are able to be used vertically as well as horizontally.

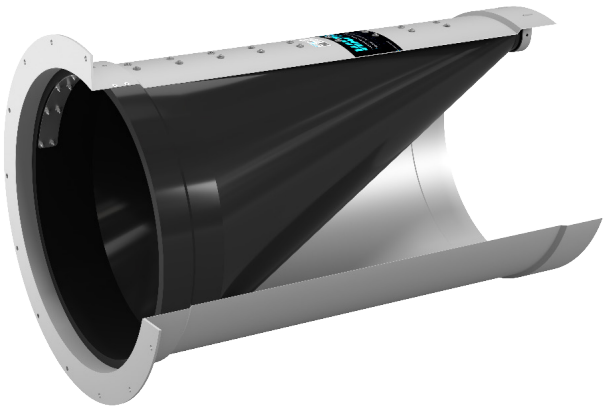

WASTOP® STANDARD RANGE DIMENSIONS

Long life-cycle is part of our DNA. It's part of our values. With this in mind we use the right materials for the right application. Stainless steel AISI 304 (EN1.4301) and AISI 316L (EN1.4404), and PVC/PE, along with a membrane material suited to the application.

WASTOP® STANDARD - 304/316 STAINLESS STEEL

Model*	DN	Length	Length (Short)**	OD seal	OD body	OD waist (OD Short)	Opening pressure Standard***	Closing pressure Standard	Installation pipe*		Weight
	[mm]	[mm]	[mm]	[mm]	[mm]	[mm]	[mmH²O]	[mmH²O]	Min	Max	[kgs]
WS97	100	210	160	102	97	93	180	70	99	101	0,7
WS101	110	215	165	105	100	96	190	60	101	104	0,8
WS116	125	230	160	120	115	111	250	90	117	120	0,9
WS146	150	300	200	160,5	144,5	138,5	230	80	146	159	2,4
WS183	200	385	270	201	181	173	260	120	182	200	4
WS193	200	395	275	211	191	183	210	110	193	210	5
WS215	225	450	300	235	215	207	220	130	216	233	5,5
WS230	250	480	320	250	230	222	200	120	232	248	6
WS240	250	520	350	260	240	232	190	110	242	258	7
WS265	300	550	365	285	265	256	180	120	267	283	10
WS290	300	600	400	310	290	280	220	160	293	307	10
WS340	350	700	500	352	340	328	360	220	343	349	18
WS370	400	730	500	394	370	358	240	160	373	391	20
WS390	400	750	500	414	390	378	310	190	393	411	24
WS440	450	840	560	467	443	431	210	140	446	464	28
WS490	500	900	600	506	490	474	270	180	493	503	29
WS515	515	1000	650	539	515	499	265	165	518	536	38
WS590	600	1200	800	603	587	567	370	240	590	598	48
WS690	700	1300	870	710	690	670	280	180	695	705	63
WS750	750	1400	950	770	750	726	390	240	755	765	75
WS790	800	1500	1000	810	790	766	350	230	795	805	88
WS885	900	1700	-	915	885	855	400	270	890	910	116
WS985	1000	1800	-	1015	985	955	390	260	990	1010	141
WS1040	1050	2000	-	-	1040	-	350	220	1048	-	221
WS1185	1200	2250	-	-	1185	1155	460	290	1190	-	290
WS1385	1400	2600	-	-	1385	1349	540	350	1390	-	440
WS1485	1500	2800	-	-	1485	1441	620	390	1490	-	642
WS1585	1600	3000	-	-	1585	1541	600	380	1590	-	700

*We have a standard set of sizes which can be customized, easily, to suit any application. Flanges on inlet, outlet or somewhere in between are all easily available. Quickly. **Customized extra short valves are available. *** Open air. Standard membrane. Lower and higher opening pressures available.

WASTOP® STANDARD - PVC/PE

Model	DN	Length	OD body	Opening Pressure Standard	Closing Pressure Standard	Weight
	[mm]	[mm]	[mm]	[mmH²O]	[mmH²O]	[kgs]
WS75PVC	75	125	75	190	70	0,3
WS110PVC	110	210	110	200	60	0,9
WS125PVC	125	240	125	190	80	1,2
WS160PVC	160	310	160	220	80	2,1
WS200PVC	200	400	200	190	110	4,1
WS250PE	250	480	250	220	130	6,3
WS250PE-I	250	480	236	220	140	4,6
WS315PE	315	600	315	220	160	12,5
WS315PE-I	315	600	295	230	170	8,3

WASTOP® STANDARD - STAINLESS

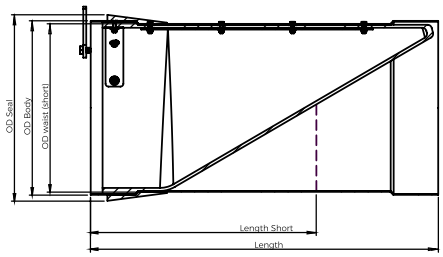

WASTOP® STANDARD - PVC/PE

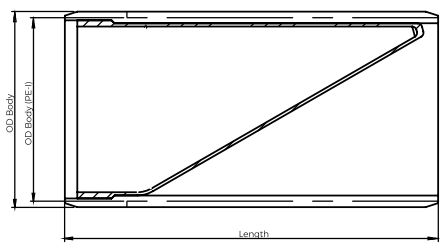

WAPRO

www.wapro.com

SJR2C LOOP TRAIL (SPRUCE CREEK RD)

FROM SOUTH OF SELIN CIRCLE TO HERBERT STREET

FINANCIAL PROJECT NUMBER: 439865-3-54-01

INDEX OF PLANS

SHEET NO.	SHEET DESCRIPTION
01	KEY SHEET
02	SIGNATURE SHEET
03	SUMMARY OF PAY ITEMS
04	DRAINAGE MAP
05	GENERAL NOTES
06	PROJECT LAYOUT
07	PROJECT CONTROL
08 - 10	TYPICAL SECTION
11	TYPICAL SECTION DETAILS
12 - 15	ROADWAY PLAN
16 - 17	ROADWAY PLAN AND PROFILE
18	GRAVITY WALL PLAN & PROFILE WALL A
19	GRAVITY WALL PLAN & PROFILE WALL B
20 - 40	CROSS SECTION
41	STORMWATER POLLUTION PREVENTION PLAN NOTES
42 - 44	EROSION CONTROL PLAN
45 - 48	WETLAND IMPACTS
49 - 55	SIGNING AND PAVEMENT MARKING PLAN
56	SIGNALIZATION GENERAL NOTES
57	SIGNALIZATION PLAN
58	REPORT OF CORE BORINGS
B1-01	GENERAL NOTES
B1-02	BOARDWALK DATA TABLES
B1-03 - B1-05	BOARDWALK DETAILS

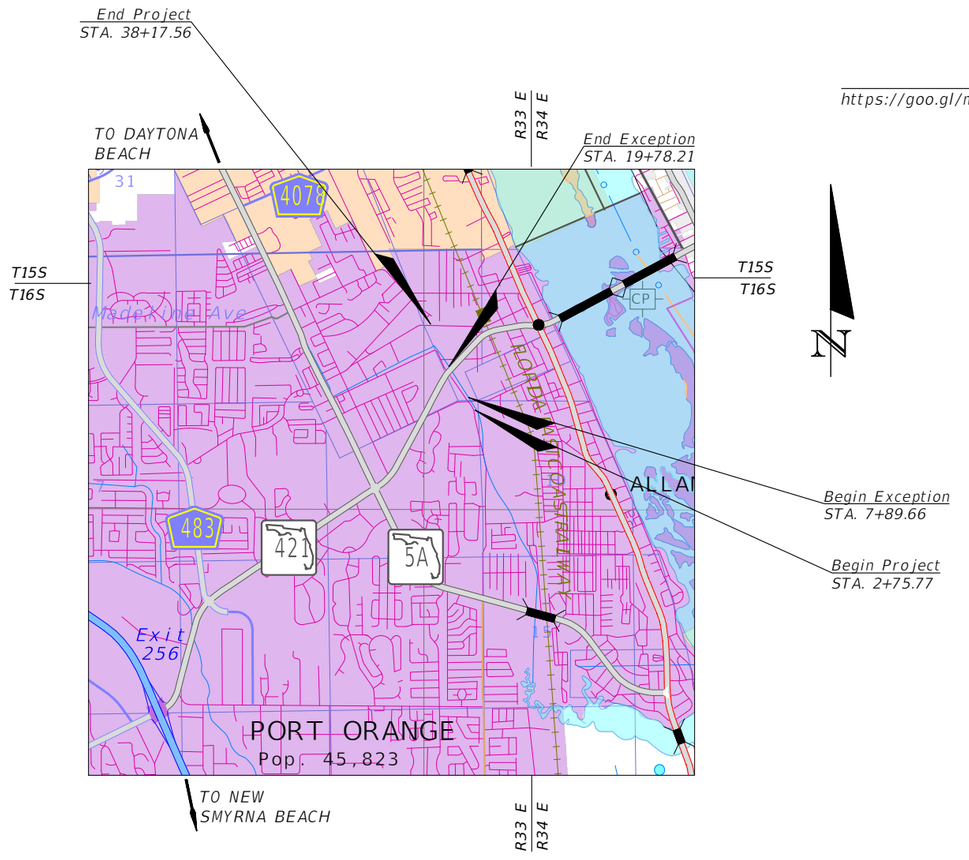

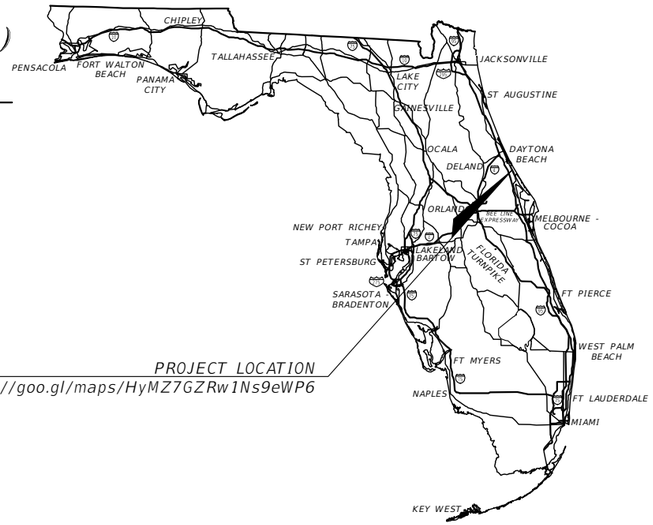

ROADWAY PLANS ENGINEER OF RECORD:

MERLYNN O. ANDERSON, P.E.
P.E. NO.: 83096
STANLEY CONSULTANTS, INC.
80 SPRING VISTA DRIVE
DeBARY, FL 32713

GOVERNING STANDARD PLANS:
Florida Department of Transportation, FY2025-26 Standard plans for Road and Bridge Construction and applicable Interim Revisions (Irs).

Standard Plans for Road Construction and associated Irs are available at the following website:
http://www.fdot.gov/design/Standardplans.shtm

Standard Plans for Bridge Construction are included in the Roadway Plans Component.

GOVERNING STANDARD SPECIFICATIONS:
Florida Department of Transportation, FY2025-26 Standard Specifications for Road and Bridge Construction at the following website:
https://www.fdot.gov/programmanagement/specs.shtm

FISCAL YEAR	SHEET NO.
25	01

THE OFFICIAL RECORD OF THIS SHEET IS THE ELECTRONIC FILE DIGITALLY SIGNED AND SEALED UNDER RULE 61G15-23.004, F.A.C.

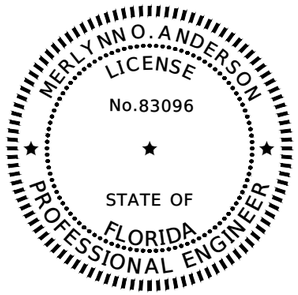

THIS DOCUMENT HAS BEEN DIGITALLY SIGNED AND SEALED BY:

Merlynn O Anderson Date: 2025.05.15 11:45:30-04'00'

ON THE DATE ADJACENT TO THE SEAL

PRINTED COPIES OF THIS DOCUMENT ARE NOT CONSIDERED SIGNED AND SEALED AND THE SIGNATURE MUST BE VERIFIED ON ANY ELECTRONIC COPIES

STANLEY CONSULTANTS, INC.
80 SPRING VISTA DRIVE
DeBARY, FL 32713
MERLYNN O. ANDERSON, P.E. NO. 83096

THE ABOVE NAMED PROFESSIONAL ENGINEER SHALL BE RESPONSIBLE FOR THE FOLLOWING SHEETS IN ACCORDANCE WITH RULE 61G15-23.004, F.A.C.

SHEET NO.	SHEET DESCRIPTION
01	KEY SHEET
02	SIGNATURE SHEET
03	SUMMARY OF PAY ITEMS
04	DRAINAGE MAP
05	GENERAL NOTES
06	PROJECT LAYOUT
07	PROJECT CONTROL
08-10	TYPICAL SECTION
11	TYPICAL SECTION DETAILS
12-15	ROADWAY PLAN
16-17	ROADWAY PLAN AND PROFILE
18	GRAVITY WALL PLAN & PROFILE WALL A
19	GRAVITY WALL PLAN & PROFILE WALL B
20-40	CROSS SECTION
41	STORMWATER POLLUTION PREVENTION PLAN NOTES
42-44	EROSION CONTROL PLAN
45-48	WETLAND IMPACTS
49-55	SIGNING AND PAVEMENT MARKING PLAN
56	SIGNALIZATION GENERAL NOTES
57	SIGNALIZATION PLAN

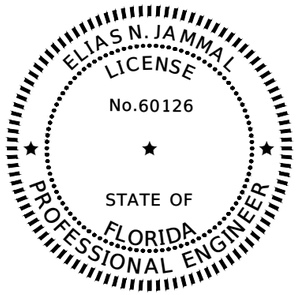

THIS DOCUMENT HAS BEEN DIGITALLY SIGNED AND SEALED BY:

Elias Jammal 2025.05.15 11:39:25-04'00'

ON THE DATE ADJACENT TO THE SEAL

PRINTED COPIES OF THIS DOCUMENT ARE NOT CONSIDERED SIGNED AND SEALED AND THE SIGNATURE MUST BE VERIFIED ON ANY ELECTRONIC COPIES

TERRACON
1675 LEE ROAD
WINTER PARK, FL 32789
ELIAS N. JAMMAL, P.E. NO. 60126

THE ABOVE NAMED PROFESSIONAL ENGINEER SHALL BE RESPONSIBLE FOR THE FOLLOWING SHEETS IN ACCORDANCE WITH RULE 61G15-23.004, F.A.C.

SHEET NO.	SHEET DESCRIPTION
02	SIGNATURE SHEET
58	REPORT OF CORE BORINGS

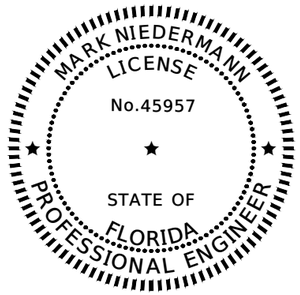

THIS DOCUMENT HAS BEEN DIGITALLY SIGNED AND SEALED BY:

Mark Niedermann Digitally signed by Mark Niedermann DN: CN=Mark Niedermann, dnQualifier=A01410D000000195A456B027001BBF99, O=FLORIDA BRIDGE AND TRANSPORTATION, C=US Date: 2025.05.15 10:11:59-04'00'

ON THE DATE ADJACENT TO THE SEAL

PRINTED COPIES OF THIS DOCUMENT ARE NOT CONSIDERED SIGNED AND SEALED AND THE SIGNATURE MUST BE VERIFIED ON ANY ELECTRONIC COPIES

FLORIDA BRIDGE & TRANSPORTATION, INC.
633 DARTMOUTH STREET
ORLANDO, FL 32804
MARK NIEDERMANN, P.E. NO. 45957

THE ABOVE NAMED PROFESSIONAL ENGINEER SHALL BE RESPONSIBLE FOR THE FOLLOWING SHEETS IN ACCORDANCE WITH RULE 61G15-23.004, F.A.C.

SHEET NO.	SHEET DESCRIPTION
02	SIGNATURE SHEET
B1-01	GENERAL NOTES
B1-02	BOARDWALK DATA TABLES
B1-03 - B1-05	BOARDWALK DETAILS

REVISIONS	
DATE	DESCRIPTION

CITY OF PORT ORANGE
1000 CITY CENTER CIRCLE
PORT ORANGE, FL 32129

MERLYNN O. ANDERSON, P.E.
P.E. LICENSE NUMBER 83096

STANLEY CONSULTANTS, INC.
80 SPRING VISTA DRIVE
DEBARY, FL 32713

SJR2C LOOP TRAIL
FROM SOUTH OF SELIN CIR TO HERBERT ST

ROAD	COUNTY	FINANCIAL PROJECT ID
SPRUCE CREEK RD	VOLUSIA	439865-3-54-01

SIGNATURE SHEET

SHEET NO. 02

PAY ITEM NO.	PAY ITEM DESCRIPTION	UNIT	QUANTITY
I. BASE BID			
0101 1	MOBILIZATION	LS	1
0102 1	MAINTENANCE OF TRAFFIC	LS	1
0104 10 3	SEDIMENT BARRIER	LF	5,168
0104 11	FLOATING TURBIDITY BARRIER	LF	200
0104 18	INLET PROTECTION SYSTEM	EA	3
0110 1 1	CLEARING & GRUBBING	AC	0.689
0110 2 2	SELECTIVE CLEARING AND GRUBBING, AREAS WITH TREES TO REMAIN	AC	0.529
0110 23	TREE REMOVAL	EA	5
0110 4 10	REMOVAL OF EXISTING CONCRETE	SY	189
0120 1	REGULAR EXCAVATION	CY	68.0
0120 6	EMBANKMENT	CY	215.0
0160 4	TYPE B STABILIZATION	SY	1,038
285701-A	DENSE GRADED AGGREGATE BASE (98% MOD PROCTOR DENSITY) 3" THICK	SY	1,038
0334 1 12	SUPERPAVE ASPHALTIC CONC, TRAFFIC B	TN	342.5
0400 0 11	CONCRETE CLASS NS, GRAVITY WALL INDEX 400-011	CY	83.3
0425 1521	INLETS, DT BOT, TYPE C,<10'	EA	3
0425 5	MANHOLE, ADJUST	EA	1
0430174118	PIPE CULVERT, OPTIONAL MATERIAL, ROUND, 18"SD	LF	131
0430174124	PIPE CULVERT, OPTIONAL MATERIAL, ROUND, 24"SD	LF	29
0430982125	MITERED END SECTION, OPTIONAL ROUND, 18" CD	EA	3
0430982129	MITERED END SECTION, OPTIONAL ROUND, 24" CD	EA	1
0430984125	MITERED END SECTION, OPTIONAL ROUND, 18" SD	EA	1
0515 1 2	PIPE HANDRAIL - GUIDERAIL, ALUMINUM	LF	308
0520 1 10	CONCRETE CURB & GUTTER, TYPE F	LF	180
0522 1	CONCRETE SIDEWALK AND DRIVEWAYS, 4" THICK	SY	485
0522 2	CONCRETE SIDEWALK AND DRIVEWAYS, 6" THICK	SY	284
0527 2	DETECTABLE WARNINGS	SF	287
0570 1 2	PERFORMANCE TURF, SOD	SY	2,558
0630 2 11	CONDUIT, FURNISH & INSTALL, OPEN TRENCH	LF	364
0630 2 12	CONDUIT, FURNISH & INSTALL, DIRECTIONAL BORE	LF	120
0630 2 14	CONDUIT, FURNISH & INSTALL, ABOVEGROUND	LF	90
0630 2 15	CONDUIT, FURNISH & INSTALL, BRIDGE MOUNT	LF	697
0632 7 2	SIGNAL CABLE- REPAIR/REPLACE/OTHER, FURNISH & INSTALL	LF	50
0633 6	FIBER OPTIC CABLE LOCATOR	DA	1
0635 2 11	PULL & SPLICE BOX, F&I, 13" x 24" COVER SIZE	EA	15
0635 3 11	JUNCTION BOX, FURNISH & INSTALL, AERIAL	EA	12
0639 1112	ELECTRICAL POWER SERVICE, F&I, OVERHEAD METER PURCHASED BY CONTRACTOR FROM POWER COMPANY	AS	4
0639 2 1	ELECTRICAL SERVICE WIRE, FURNISH & INSTALL	LF	360
0639 3 11	ELECTRICAL SERVICE DISCONNECT, F&I, POLE MOUNT	EA	1
0641 2 12	PRESTRESSED CONCRETE POLE, F&I, TYPE P-II SERVICE POLE	EA	4
0646 1 11	ALUMINUM SIGNALS POLE, PEDESTAL	EA	2
0646 1 12	ALUMINUM SIGNALS POLE, FURNISH & INSTALL PEDESTRIAN DETECTOR POST	EA	6
0653 1 11	PEDESTRIAN SIGNAL, FURNISH & INSTALL LED COUNTDOWN, 1 WAY	AS	2
0653 1 60	PEDESTRIAN SIGNAL, REMOVE PED SIGNAL- POLE/PEDESTAL TO REMAIN	AS	2
0654 2 12	MIDBLOCK CROSSWALK: RECTANGULAR RAPID FLASHING BEACON, FURNISH & INSTALL- AC, COMPLETE SIGN ASSEMBLY- BACK TO BACK	AS	6
0665 1 11	PEDESTRIAN DETECTOR, FURNISH & INSTALL, STANDARD	EA	2
0665 1 60	PEDESTRIAN DETECTOR, REMOVE- POLE/PEDESTAL TO REMAIN	EA	2
0700 1111	SINGLE COLUMN GROUND SIGN ASSEMBLY, F&I GROUND MOUNT, LESS THAN 12 SF	EA	20
0700 1600	SINGLE COLUMN GROUND SIGN ASSEMBLY, REMOVE	EA	3
0711 11123	THERMOPLASTIC, STANDARD, WHITE, SOLID, 12" FOR CROSSWALK AND ROUNDABOUT	LF	442
0711 11125	THERMOPLASTIC, STANDARD, WHITE, SOLID, 24" FOR STOP LINE AND CROSSWALK	LF	470
0711 11170	THERMOPLASTIC, STANDARD, WHITE, ARROW	EA	2
0711 16101	THERMOPLASTIC, STANDARD-OTHER SURFACES, WHITE, SOLID, 6"	GM	0.003
0711 17 1	THERMOPLASTIC, REMOVE EXISTING THERMOPLASTIC PAVEMENT MARKINGS-SURFACE TO REMAIN	SF	317
0715 1 12	LIGHTING CONDUCTORS, F&I, INSULATED, NO.8 - 6	LF	3,247
0715 516-513	LIGHT POLE COMPLETE-SPECIAL DESIGN, F&I, POLE TOP MOUNT, WOOD, 13'	EA	11
0715 516-518	LIGHT POLE COMPLETE-SPECIAL DESIGN, F&I, POLE TOP MOUNT, WOOD, 18'	EA	1
0751 49	TIMBER PEDESTRIAN BRIDGE	SF	5,472

PAY ITEM NO.	PAY ITEM DESCRIPTION	UNIT	QUANTITY
II. NONELIGIBLE ITEMS			
0522 2A	CONCRETE SHARED USE PATH, 7" THICK (HEAVY DUTY) (IN LIEU OF 4" THICK)	SY	47
CITY-01	18" WAPRO STAINLESS WASTOP INLINE CHECK VALVE	EA	1

PAY ITEM NOTES

PAY ITEM NO. 100 1 1 - CLEARING & GRUBBING
INCLUDES ALL COSTS FOR THE CONTRACTOR TO STAKEOUT THE ALIGNMENT OF THE BOARDWALK FOR THE CITY'S VISUAL INSPECTION AND DETERMINATION OF VEGETATION TO BE REMOVED.

PAY ITEM NO. 751-49 - TIMBER PEDESTRIAN BRIDGE
INCLUDES ALL COSTS ASSOCIATED WITH THE CONSTRUCTION OF THE BOARDWALK.

PAY ITEM NO. CITY-01 - 18" WAPRO STAINLESS WASTOP INLINE CHECK VALVE
INCLUDES ALL COSTS ASSOCIATED WITH FURNISHING AND INSTALLING THE WAPRO STAINLESS WASTOP INLINE CHECK VALVE, OR APPROVED EQUAL, ON DRAINAGE STRUCTURE S-104 LOCATED AT STATION 23+60.04 (48.42' RT.).

THE OFFICIAL RECORD OF THIS SHEET IS THE ELECTRONIC FILE DIGITALLY SIGNED AND SEALED UNDER RULE 61G15-23.004, F.A.C.

REVISIONS	
DATE	DESCRIPTION

CITY OF PORT ORANGE
1000 CITY CENTER CIRCLE
PORT ORANGE, FL 32129

MERLYNN O. ANDERSON, P.E.
P.E. LICENSE NUMBER 83096

STANLEY CONSULTANTS, INC.
80 SPRING VISTA DRIVE
DEBARY, FL 32713

SJR2C LOOP TRAIL
FROM SOUTH OF SELIN CIR TO HERBERT ST

ROAD	COUNTY	FINANCIAL PROJECT ID
SPRUCE CREEK RD	VOLUSIA	439865-3-54-01

SUMMARY OF PAY ITEMS

SHEET NO. 03

S-101
STA 20+85.00 (84.43 Rt.)
CONST. INLET TYPE C
INDEX NO. 425-052
TOP EL. = 4.00'
FL 1.00 W (18" X 18")

S-102
STA 20+96.68 (45.17 Rt.)
CONST. CD MES (1:2)
INDEX NO. 430-021
FL 0.80 (18" X 18")

S-103
STA 23+60.04 (91.08 Rt.)
CONST. INLET TYPE C
INDEX NO. 425-052
TOP EL. = 3.43'
FL 0.62 SW (18")

S-104
STA 23+60.04 (48.42 Rt.)
CONST. CD MES (1:2)
INDEX NO. 430-021
(WITH INLINE CHECK VALVE)
FL 0.83 (18")

S-105
STA 24+69.98 (90.14 Rt.)
CONST. SD MES (1:4)
INDEX NO. 430-022
FL 2.71 (18")

S-106
STA 24+92.92 (49.05 Rt.)
CONST. CD MES (1:2)
INDEX NO. 430-021
FL 2.00 (18")

S-107
STA 28+95.94 (25.25 Rt.)
CONST. INLET TYPE C
INDEX NO. 425-052
TOP EL. = 5.40'
FL 0.36 SW (24")

S-108
STA 28+92.24 (2.98 Lt.)
CONST. CD MES (1:2)
INDEX NO. 430-021
FL 0.36 (24")

N
1" = 300'

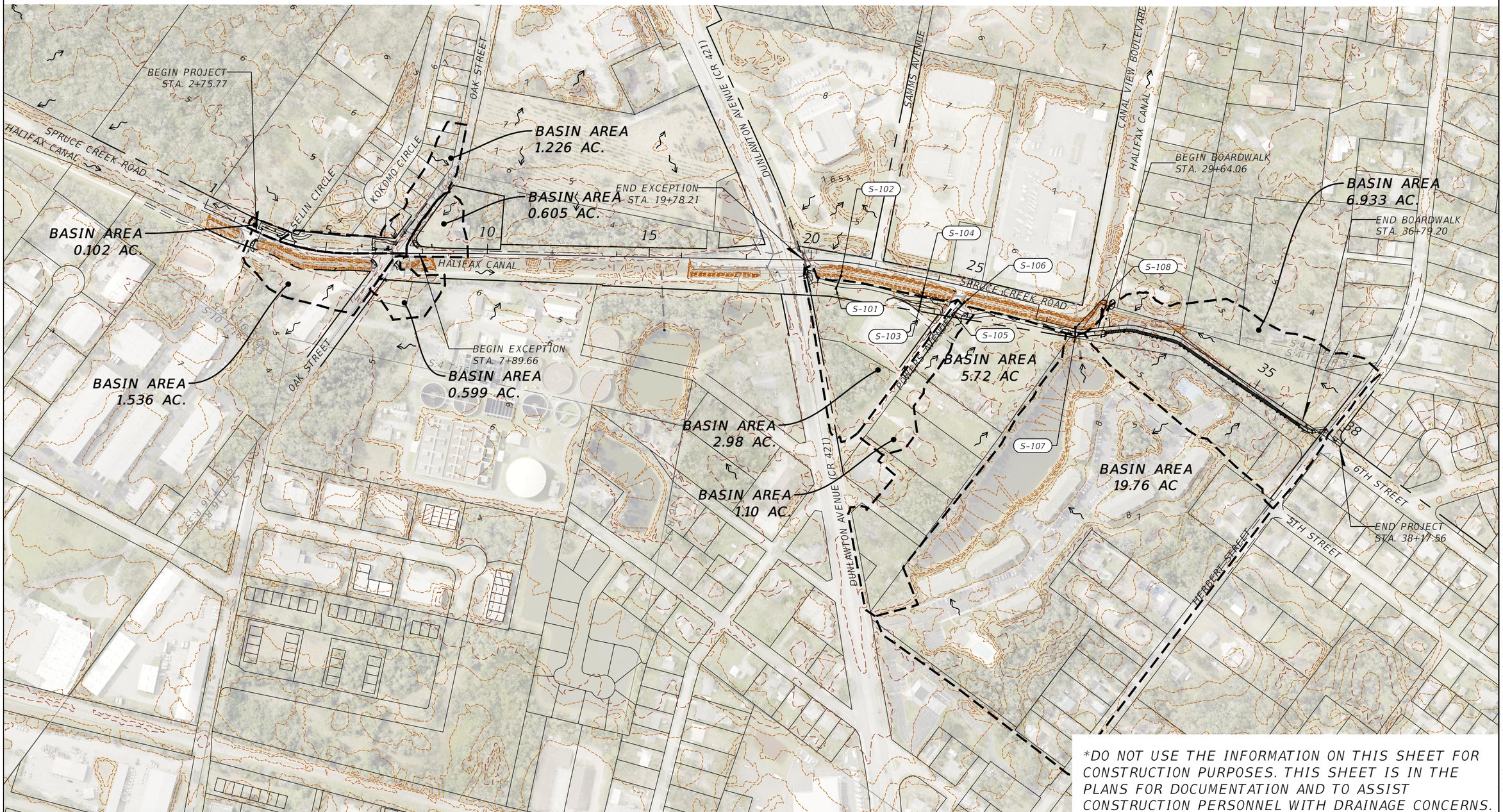

*DO NOT USE THE INFORMATION ON THIS SHEET FOR CONSTRUCTION PURPOSES. THIS SHEET IS IN THE PLANS FOR DOCUMENTATION AND TO ASSIST CONSTRUCTION PERSONNEL WITH DRAINAGE CONCERNS.

THE OFFICIAL RECORD OF THIS SHEET IS THE ELECTRONIC FILE DIGITALLY SIGNED AND SEALED UNDER RULE 61G15-23.004, F.A.C.

REVISIONS	
DATE	DESCRIPTION

CITY OF PORT ORANGE
1000 CITY CENTER CIRCLE
PORT ORANGE, FL 32129

MERLYNN O. ANDERSON, P.E.
P.E. LICENSE NUMBER 83096

STANLEY CONSULTANTS, INC.
80 SPRING VISTA DRIVE
DEBARY, FL 32713

SJR2C LOOP TRAIL
FROM SOUTH OF SELIN CIR TO HERBERT ST

ROAD	COUNTY	FINANCIAL PROJECT ID
SPRUCE CREEK RD	VOLUSIA	439865-3-54-01

DRAINAGE MAP

SHEET NO. 04

O'Neill, Karen 5/14/2025 12:30:14 PM Z:\2016 Projects\10962 (Port Orange)\TW0 09 - SUNTrail (SJR2C Loop) Spruce Creek Rd\CAD\439865\Drainage\DRMPRD01.dwg

GENERAL NOTES

1. BENCHMARK ELEVATIONS SHOWN ON THE PLANS ARE NORTH AMERICAN VERTICAL DATUM OF 1988 (NAVD88).

2. ALL SURVEY INFORMATION WAS OBTAINED FROM LICENSED FLORIDA PROFESSIONAL SURVEYORS AND MAPPERS AND UTILIZED AS SUPPORTING DATA IN THE PRODUCTION OF DESIGN PLANS AND FOR CONSTRUCTION ON SUBJECT PROJECT. THE PROFESSIONAL SURVEYORS AND MAPPERS OF RECORD ARE:

   DAVID A. WHITE, P.S.M.
   P.S.M. NO.: 4044
   PEC SURVEYING AND MAPPING, LLC
   2100 ALAFAYA TRAIL, SUITE 203
   OVIEDO, FL 32765
   CERTIFICATE OF AUTHORIZATION: LB 7808

3. THE LOCATION(S) OF THE UTILITIES SHOWN IN THE PLANS (INCLUDING THOSE DESIGNATED Vv, Vh and Vvh) ARE BASED ON LIMITED INVESTIGATION TECHNIQUES AND SHOULD BE CONSIDERED APPROXIMATE ONLY. THE VERIFIED LOCATIONS / ELEVATIONS APPLY ONLY AT THE POINTS SHOWN. INTERPOLATIONS BETWEEN THESE POINTS HAVE NOT BEEN VERIFIED.

4. UTILITY / AGENCY OWNERS:

COMPANY	CONTACT	TELEPHONE NUMBERS
AT&T (TELEPHONE)	KIRBY SPENCER	(386) 366-4588
CENTURY LINK	DINA DOMINGUEZ	(407) 830-3650
CHARTER COMM.	PAUL LIAKOS	(407) 215-8838
CITY OF PORT ORANGE	JUNOS REED	(386) 506-5754
CROWN CASTLE	DANNY HASKETT	(786) 246-7827
FLORIDA POWER & LIGHT (VOLUSIA)	CHRISTOPHER BUONANNI	(386) 668-9842
TECO PEOPLES GAS	BRUCE STOUT	(407) 420-2678
UNITI FIBER LLC	TRAVIS GEORGE	(251) 487-7225
VOLUSIA TRAFFIC LOCATES		(386) 736-5968

5. MAINTENANCE OF TRAFFIC SHALL BE IN ACCORDANCE WITH FDOT STANDARD INDEX 102-600 SERIES; SPECIFIC ATTENTION IS DIRECTED TO FDOT STANDARD INDEX NUMBER 102-600, 102-601, 102-602, 102-603, 102-604, 102-613 AND 102-625 FOR MAINTENANCE OF VEHICULAR TRAFFIC, AND FDOT STANDARD INDEX NUMBERS 102-660 AND 102-661 FOR MAINTENANCE OF PEDESTRIAN AND BICYCLE TRAFFIC. CONTRACTOR TO PREPARE AND SUBMIT TEMPORARY TRAFFIC CONTROL PLANS INCLUDING PEDESTRIAN TEMPORARY DETOURS TO THE CITY FOR APPROVAL.

6. PROPOSED CONSTRUCTION SHALL COMPLY WITH THE AMERICANS WITH DISABILITIES ACT (ADA), THE ADA COMPLIANCE HANDBOOK, LATEST EDITION, AND THE FLORIDA ACCESSIBILITY CODE.

7. SPECIAL EVENT DAYS FOR THIS PROJECT INCLUDE:
   HOLIDAY PARADE

8. COMPLY WITH FLORIDA DEPARTMENT OF TRANSPORTATION STANDARD SPECIFICATIONS ARTICLE 7-11. SPECIAL ATTENTION SHOULD BE GIVEN TO LOCATING AND AVOIDING FLORIDA DEPARTMENT OF TRANSPORTATION FIBER OPTIC CABLING. IF FLORIDA DEPARTMENT OF TRANSPORTATION FIBER OPTIC CABLING IS IMPACTED BY THE CONTRACTOR, TEMPORARY AND PERMANENT REPAIRS MUST BE COMPLETED CONSISTENT WITH ARTICLE 7-11: THE CABLING MUST BE REPLACED SO AS TO NOT INCREASE FIBER LINK ATTENUATION ABOVE EXISTING CONDITIONS. ACCORDINGLY, NO NEW SPLICES OR CONNECTORS MAY BE ADDED IN EXCESS OF EXISTING CONDITIONS, RESULTING IN THE NEED TO REPLACE EXISTING DAMAGED FIBER OPTIC CABLE FROM BUTT SPLICE TO BUTT SPLICE OR BETWEEN TERMINATIONS WITH NEW FIBER OPTIC CABLING THAT IS EQUAL TO OR BETTER THAN THE EXISTING CABLING BEING REPLACED.

9. WITHIN THE VICINITY OF THE PROPOSED BOARDWALK, EXISTING TREES SHOWN WITHIN THESE PLANS ARE ONLY THOSE THAT WERE SURVEYED IN ACCORDANCE WITH THE CITY'S SPECIMEN TREE PROTECTION REQUIREMENTS WITHIN CHAPTER 9, ARTICLE II, SECTION 16 OF THE CITY'S LAND DEVELOPMENT CODE. HOWEVER ADDITIONAL EXISTING VEGETATION AND TREES ARE PRESENT, ESPECIALLY WITHIN THE VICINITY OF THE PROPOSED BOARDWALK.

10. THE CONTRACTOR SHALL BE REQUIRED TO STAKEOUT THE ALIGNMENT OF THE PROPOSED BOARDWALK FOR THE CITY TO VISUALLY INSPECT THE PROPOSED CLEARING LIMITS PRIOR TO ANY CONSTRUCTION IN THE VICINITY OF THE PROPOSED BOARDWALK. DURING THE INSPECTION THE CITY WILL DETERMINE THE EXTENT OF EXISTING VEGETATION AND/OR TREES TO BE REMOVED, OVER AND BEYOND THOSE SPECIMEN TRESS THAT ARE SPECIFICALLY DENOTED FOR REMOVAL

THE OFFICIAL RECORD OF THIS SHEET IS THE ELECTRONIC FILE DIGITALLY SIGNED AND SEALED UNDER RULE 61G15-23.004, F.A.C.

REVISIONS	
DATE	DESCRIPTION

CITY OF PORT ORANGE
1000 CITY CENTER CIRCLE
PORT ORANGE, FL 32129

MERLYNN O. ANDERSON, P.E.
P.E. LICENSE NUMBER 83096

STANLEY CONSULTANTS, INC.
80 SPRING VISTA DRIVE
DEBARY, FL 32713

SJR2C LOOP TRAIL
FROM SOUTH OF SELIN CIR TO HERBERT ST

ROAD	COUNTY	FINANCIAL PROJECT ID
SPRUCE CREEK RD	VOLUSIA	439865-3-54-01

GENERAL NOTES

SHEET NO. 05

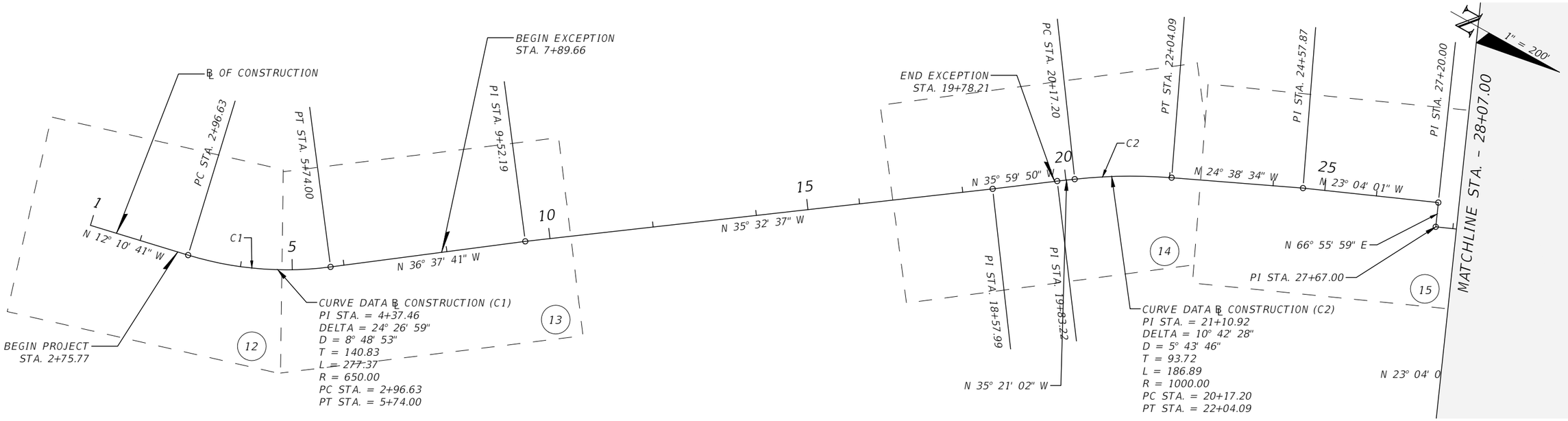

THE OFFICIAL RECORD OF THIS SHEET IS THE ELECTRONIC FILE DIGITALLY SIGNED AND SEALED UNDER RULE 61G15-23.004, F.A.C.

REVISIONS	
DATE	DESCRIPTION

CITY OF PORT ORANGE
1000 CITY CENTER CIRCLE
PORT ORANGE, FL 32129

MERLYNN O. ANDERSON, P.E.
P.E. LICENSE NUMBER 83096

STANLEY CONSULTANTS, INC.
80 SPRING VISTA DRIVE
DEBARY, FL 32713

SJR2C LOOP TRAIL
FROM SOUTH OF SELIN CIR TO HERBERT ST

ROAD	COUNTY	FINANCIAL PROJECT ID
SPRUCE CREEK RD	VOLUSIA	439865-3-54-01

PROJECT LAYOUT

SHEET NO. 06

O'Neill, Karen 5/14/2025 12:30:33 PM Z:\2016 Projects\10962 (Port Orange)\TWO 09 - SUNTrail (SJR2C Loop) Spruce Creek Rd\CAD\439865\Roadway\PLAYRD01.dwg

℄ OF SURVEY

CURVE DATA ℄ CONSTRUCTION (C1)
PI STA. = 4+37.46
DELTA = 24° 26' 59"
D = 8° 48' 53"
T = 140.83
L = 277.37
R = 650.00
PC STA. = 2+96.63
PT STA. = 5+74.00

BEGIN EXCEPTION
STA. 7+89.66

PT STA. 5+74.00

PI STA. 9+52.19

℄ OF CONSTRUCTION

S:9 T:16 R:33
S:4 T:16 R:33
S:4 T:16 R:33

FOUND 5/8" REBAR NO ID

FOUND N&D LB 3019

END EXCEPTION
STA. 19+78.21

PC STA. 20+17.20

PT STA. 22+04.09

PI STA. 24+57.87

SET N&D TRAV PT LB 7808

MATCHLINE STA. - 25+80.00

1" = 200'

SET 5/8" IRC WITNESS LB 7808

170.76

SET 5/8" IRC WITNESS LB 7808

84.46

318°16'15"

SET IRC TRAV PT LB 7808

N 12° 10' 41" W

BEGIN PROJECT
STA. 2+75.77

SET "X" CUT IN SIDEWALK

C1

PC STA. 2+96.63

S:9 T:16 R:33
S:10 T:16 R:33

FOUND 5/8" IRC LB 4567

FOUND 5/8" IRC LB 3019

FOUND 5/8" IRC LB 3019

FOUND 5/8" IRC CAN'T READ

FOUND N&D LB 3019

293°36'59"

SET IRC TRAV PT LB 7808

109.58

279.90

SET 5/8" IRC WITNESS LB 7808

SET 5/8" IRC WITNESS LB 7808

N 36° 37' 41" W

N 35° 32' 37" W

N 35° 59' 50" W

PI STA. 18+57.99

SET IRC TRAV PT LB 7808

98°05'27"

59.08

120.41

SET 5/8" IRC WITNESS LB 7808

SET 5/8" IRC WITNESS LB 7808

FOUND 5/8" IRC LB 3019

SET IRC TRAV PT LB 7808

PI STA. 19+83.22
N 35° 21' 02" W

FOUND 5/8" REBAR NO ID

FOUND 5/8" REBAR NO ID

FOUND 1/2" REBAR NO ID

SET 5/8" IRC WITNESS LB 7808

SET 5/8" IRC WITNESS LB 7808

℄ OF SURVEY

SET IRC TRAV PT LB 7808

261°48'47"

121.56

61.24

CURVE DATA ℄ CONSTRUCTION (C2)
PI STA. = 21+10.92
DELTA = 10° 42' 28"
D = 5° 43' 46"
T = 93.72
L = 186.89
R = 1000.00
PC STA. = 20+17.20
PT STA. = 22+04.09

N 24° 38' 34" W

BEGIN BOARDWALK
STA. 29+84.06

SET 5/8" IRC WITNESS LB 7808

231.22'

SET N&D WITNESS LB 7808

116.58'

PI STA. 27+20.00

23° 04' 01" W

N 66° 55' 59" E SET IRC TRAV PT LB 7808

82°44'02"

PI STA. 27+67.00

TBM 1383
EL. 5.215'
SET IRC
TRAV PT LB 7808

FOUND 3/4" REBAR NO ID

FOUND 5/8" IRC SLIGER LB 3019

FOUND 5/8" IRC SLIGER LB 4567

N 22° 25' 51" W

N 42° 25' 51" W

FOUND 1/2" REBAR NO ID (TOP BENT EAST)

PT STA. 29+20.74

PC STA. 30+43.11

PT STA. 30+86.39

PC STA. 31+96.21

PT STA. 32+39.50

N 02° 35' 51" W

CURVE DATA ℄ CONSTRUCTION (C3)
PI STA. = 29+04.34
DELTA = 19° 21' 50"
D = 58° 27' 54"
T = 16.72
L = 33.12
R = 98.00
PC STA. = 28+87.62
PT STA. = 29+20.74

PC STA. 28+87.62

CURVE DATA ℄ CONSTRUCTION (C4)
PI STA. = 30+64.97
DELTA = 20° 00' 00"
D = 46° 12' 23"
T = 21.86
L = 43.28
R = 124.00
PC STA. = 30+43.11
PT STA. = 30+86.39

CURVE DATA ℄ CONSTRUCTION (C5)
PI STA. = 32+18.08
DELTA = 20° 00' 00"
D = 46° 12' 23"
T = 21.86
L = 43.28
R = 124.00
PC STA. = 31+96.21
PT STA. = 32+39.50

℄ OF CONSTRUCTION

S:4 T:16 R:33
S:4 T:16 R:33

℄ OF SURVEY

FOUND 5/8" IRC CAN'T READ

SET H&T POL

FOUND 5/8" IRC PSM 5095

FOUND 1/2" REBAR NO ID

END BOARDWALK
STA. 36+79.20

N 07° 03' 27" W

FOUND 1/2" REBAR NO ID

FOUND NAIL & WASHER, NO ID

FOUND 1/2" PIPE NO ID

FOUND 1/2" IRC PHILLIPS RLS 2048

FOUND 5/8" IRC SLIGER LB 3612

SET N&D TRAV PT LB 7808

FOUND 3/4" PIPE NO ID

129.47

S 88° 30' 59" E

SET 5/8" IRC WITNESS LB 7808

℄ OF SURVEY

END PROJECT
STA. 38+17.56

MATCHLINE STA. - 25+80.00

1" = 200'

THE OFFICIAL RECORD OF THIS SHEET IS THE ELECTRONIC FILE DIGITALLY SIGNED AND SEALED UNDER RULE 61G15-23.004, F.A.C.

REVISIONS	
DATE	DESCRIPTION

CITY OF PORT ORANGE
1000 CITY CENTER CIRCLE
PORT ORANGE, FL 32129

MERLYNN O. ANDERSON, P.E.
P.E. LICENSE NUMBER 83096

STANLEY CONSULTANTS, INC.
80 SPRING VISTA DRIVE
DEBARY, FL 32713

SJR2C LOOP TRAIL
FROM SOUTH OF SELIN CIR TO HERBERT ST

ROAD	COUNTY	FINANCIAL PROJECT ID
SPRUCE CREEK RD	VOLUSIA	439865-3-54-01

PROJECT CONTROL

SHEET NO. 07

O'Neill, Karen 5/14/2025 12:30:47 PM
Z:\2016 Projects\10962 (Port Orange)\TWO 09 - SUNTrail (SJR2C Loop) Spruce Creek Rd\CAD\439865\Survey\CTLSRD01.dwg

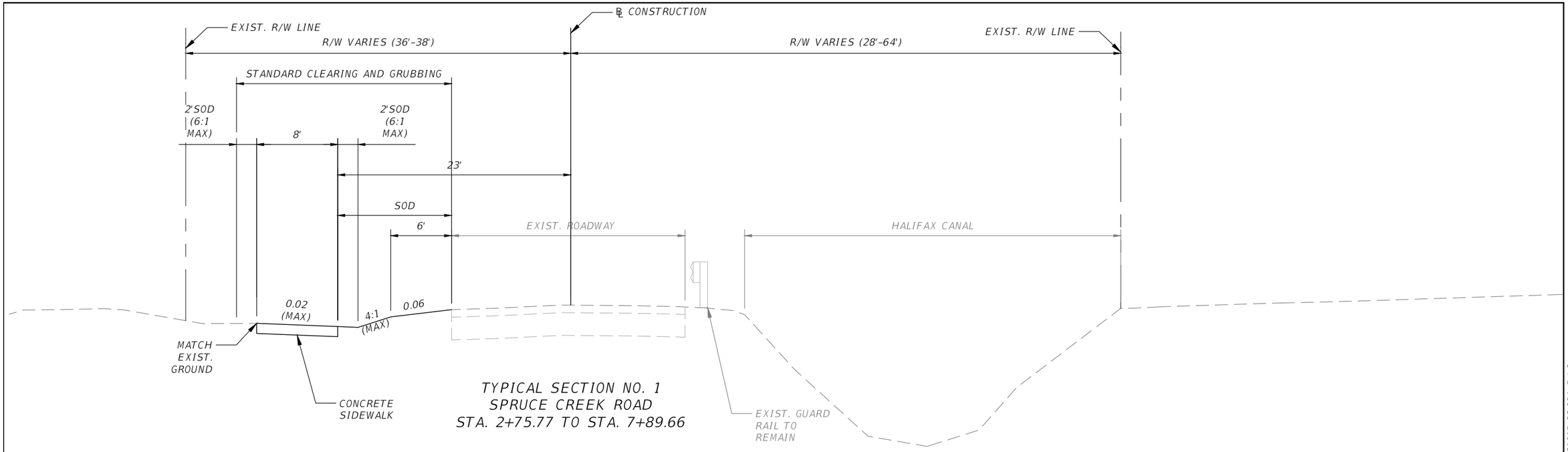

TYPICAL SECTION NO. 1
SPRUCE CREEK ROAD
STA. 2+75.77 TO STA. 7+89.66

EXCEPTION
STA. 7+89.66 TO STA. 19+78.21

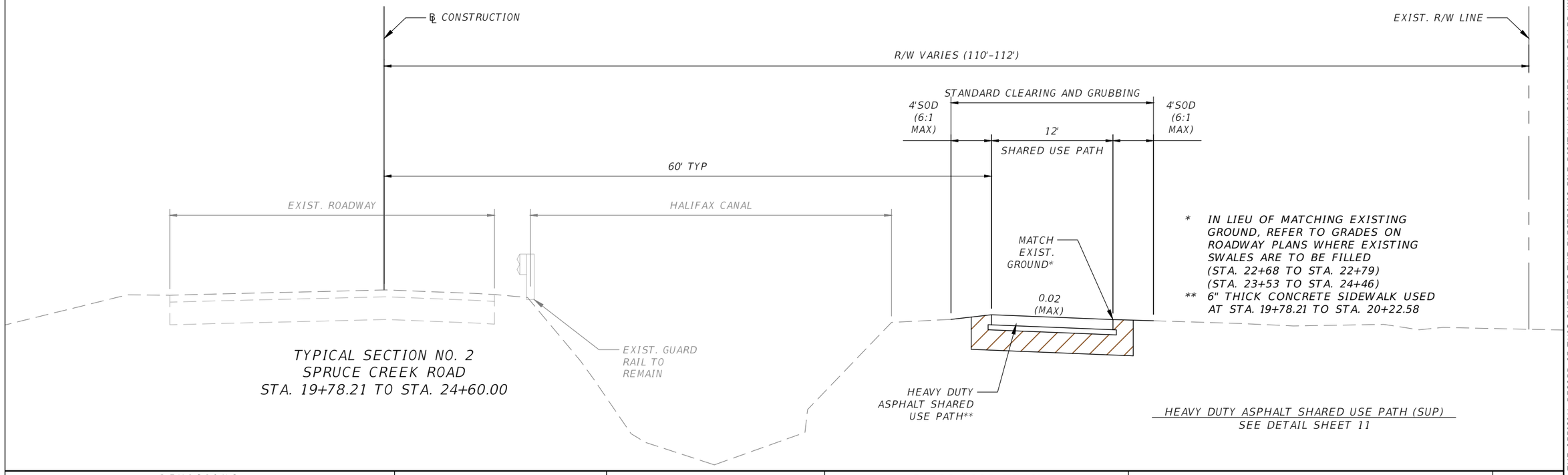

TYPICAL SECTION NO. 2
SPRUCE CREEK ROAD
STA. 19+78.21 TO STA. 24+60.00

THE OFFICIAL RECORD OF THIS SHEET IS THE ELECTRONIC FILE DIGITALLY SIGNED AND SEALED UNDER RULE 61G15-23.004, F.A.C.

REVISIONS	
DATE	DESCRIPTION

CITY OF PORT ORANGE
1000 CITY CENTER CIRCLE
PORT ORANGE, FL 32129

MERLYNN O. ANDERSON, P.E.
P.E. LICENSE NUMBER 83096

STANLEY CONSULTANTS, INC.
80 SPRING VISTA DRIVE
DEBARY, FL 32713

SJR2C LOOP TRAIL
FROM SOUTH OF SELIN CIR TO HERBERT ST

ROAD	COUNTY	FINANCIAL PROJECT ID
SPRUCE CREEK RD	VOLUSIA	439865-3-54-01

TYPICAL SECTION

SHEET NO. 08

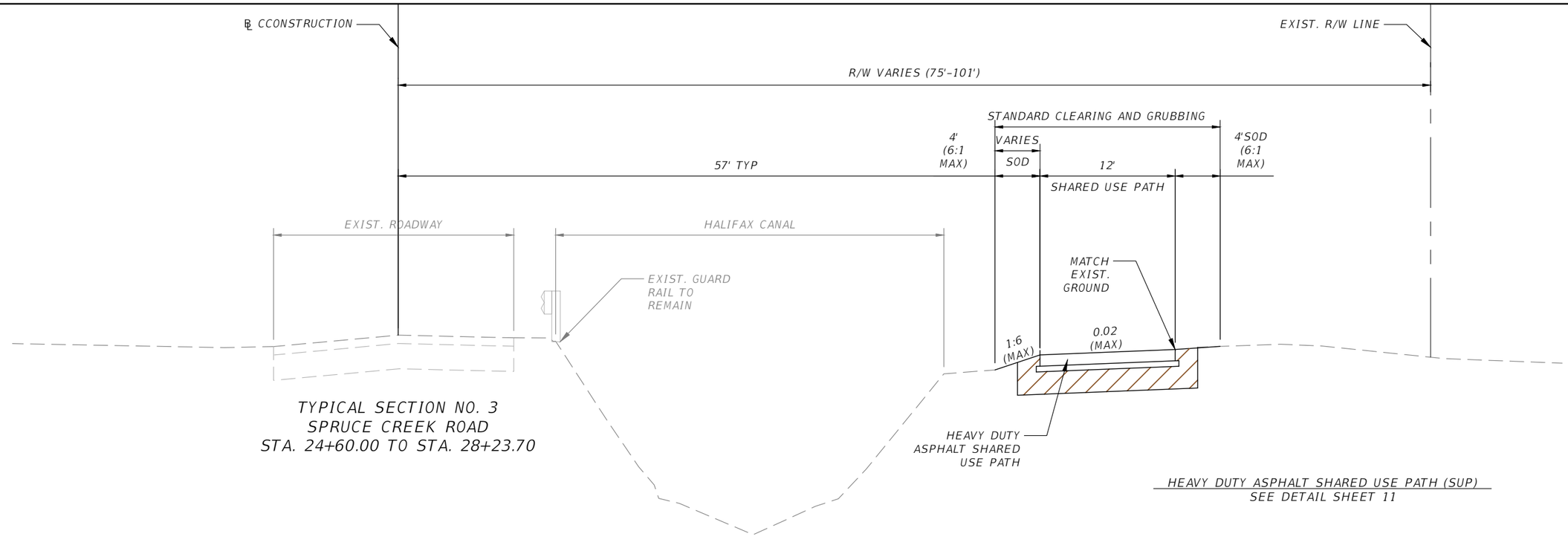

TYPICAL SECTION NO. 3
SPRUCE CREEK ROAD
STA. 24+60.00 TO STA. 28+23.70

HEAVY DUTY ASPHALT SHARED USE PATH (SUP)
SEE DETAIL SHEET 11

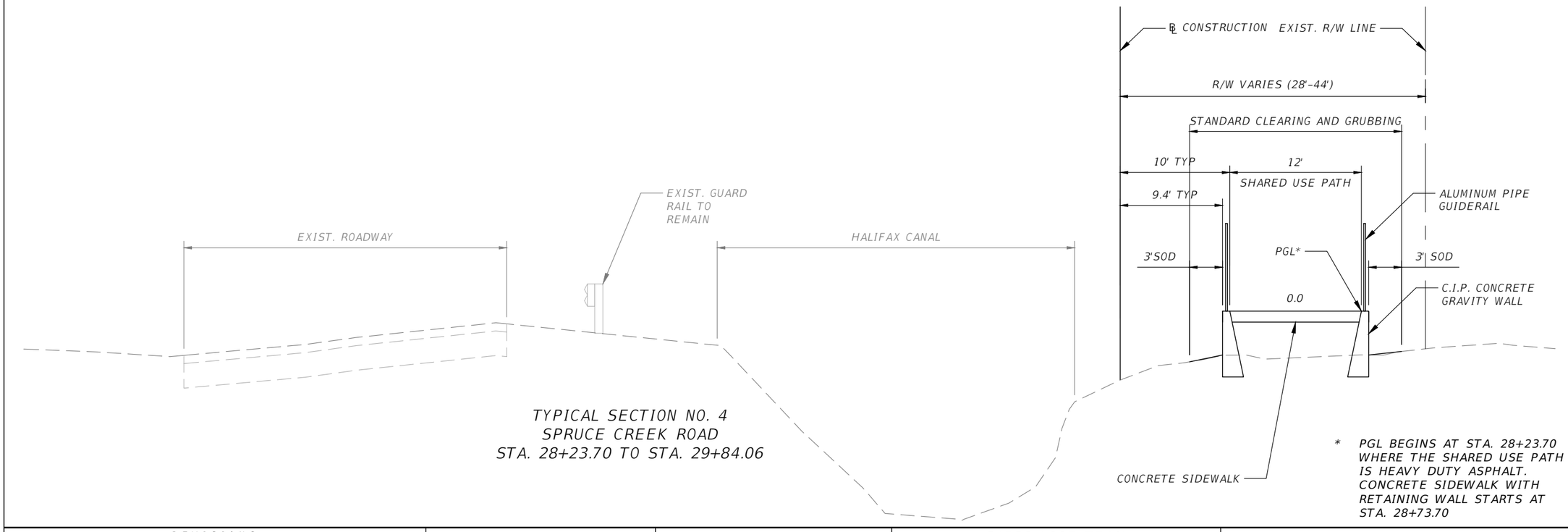

TYPICAL SECTION NO. 4
SPRUCE CREEK ROAD
STA. 28+23.70 TO STA. 29+84.06

* PGL BEGINS AT STA. 28+23.70 WHERE THE SHARED USE PATH IS HEAVY DUTY ASPHALT. CONCRETE SIDEWALK WITH RETAINING WALL STARTS AT STA. 28+73.70

THE OFFICIAL RECORD OF THIS SHEET IS THE ELECTRONIC FILE DIGITALLY SIGNED AND SEALED UNDER RULE 61G15-23.004, F.A.C.

REVISIONS	
DATE	DESCRIPTION

CITY OF PORT ORANGE
1000 CITY CENTER CIRCLE
PORT ORANGE, FL 32129

MERLYNN O. ANDERSON, P.E.
P.E. LICENSE NUMBER 83096

STANLEY CONSULTANTS, INC.
80 SPRING VISTA DRIVE
DEBARY, FL 32713

SJR2C LOOP TRAIL
FROM SOUTH OF SELIN CIR TO HERBERT ST

ROAD	COUNTY	FINANCIAL PROJECT ID
SPRUCE CREEK RD	VOLUSIA	439865-3-54-01

TYPICAL SECTION

SHEET NO. 09

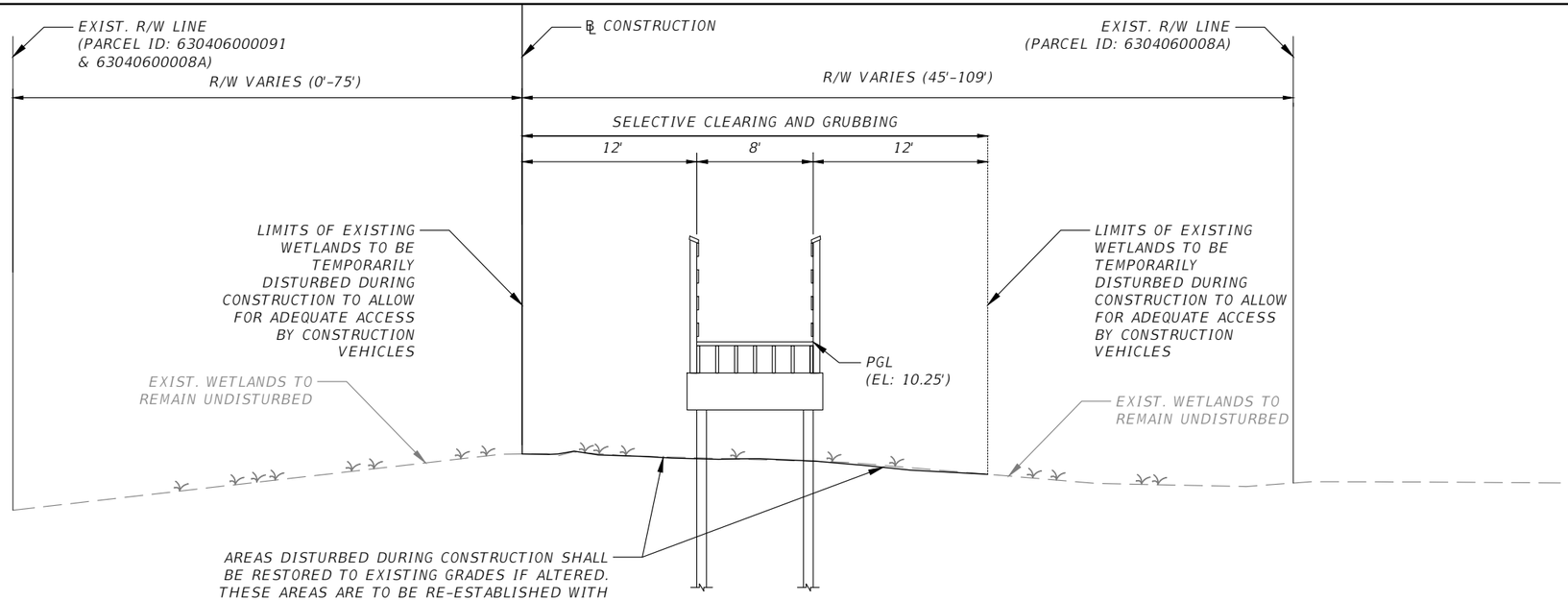

TYPICAL SECTION NO. 5
SPRUCE CREEK ROAD
STA. 29+84.06 TO STA. 36+79.20

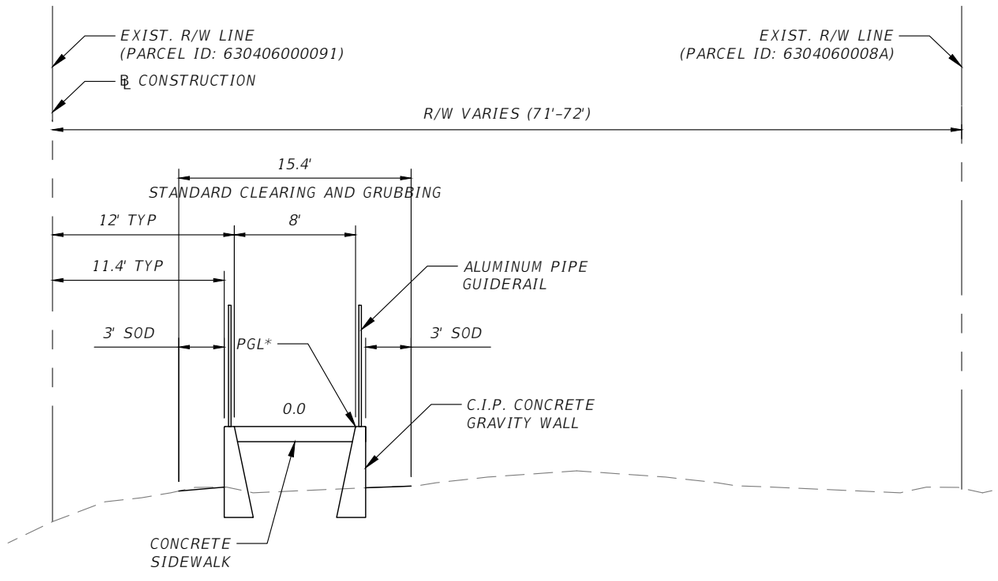

* SEE ROADWAY PLAN AND PROFILE SHEETS FOR ELEVATIONS

TYPICAL SECTION NO. 6
SPRUCE CREEK ROAD
STA. 36+79.20 TO STA. 36+93.79

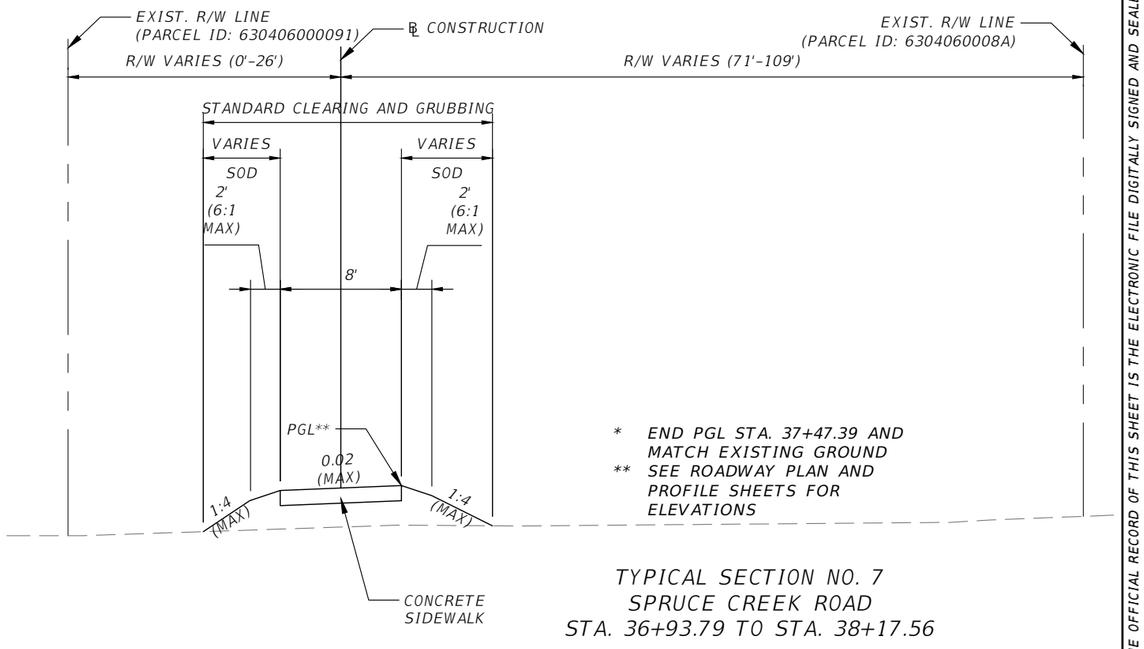

* END PGL STA. 37+47.39 AND MATCH EXISTING GROUND
** SEE ROADWAY PLAN AND PROFILE SHEETS FOR ELEVATIONS

TYPICAL SECTION NO. 7
SPRUCE CREEK ROAD
STA. 36+93.79 TO STA. 38+17.56

THE OFFICIAL RECORD OF THIS SHEET IS THE ELECTRONIC FILE DIGITALLY SIGNED AND SEALED UNDER RULE 61G15-23.004, F.A.C.

REVISIONS	
DATE	DESCRIPTION

CITY OF PORT ORANGE
1000 CITY CENTER CIRCLE
PORT ORANGE, FL 32129

MERLYNN O. ANDERSON, P.E.
P.E. LICENSE NUMBER 83096
STANLEY CONSULTANTS, INC.
80 SPRING VISTA DRIVE
DEBARY, FL 32713

SJR2C LOOP TRAIL
FROM SOUTH OF SELIN CIR TO HERBERT ST

ROAD	COUNTY	FINANCIAL PROJECT ID
SPRUCE CREEK RD	VOLUSIA	439865-3-54-01

TYPICAL SECTION

SHEET NO. 10

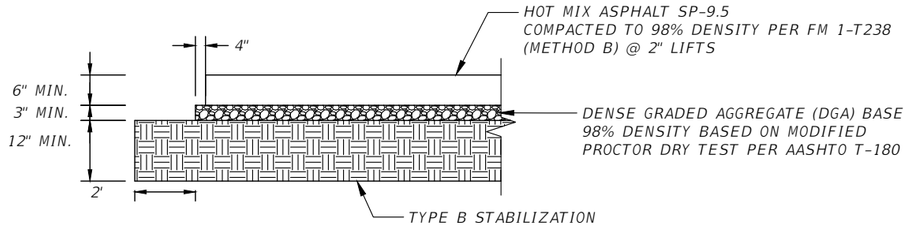

HEAVY DUTY ASPHALT SHARED USE PATH CONSTRUCTION DETAIL

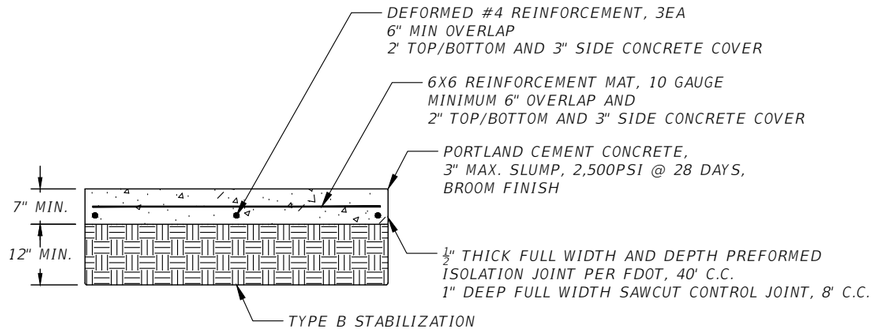

HEAVY DUTY CONCRETE SHARED USE PATH CONSTRUCTION DETAIL

THE OFFICIAL RECORD OF THIS SHEET IS THE ELECTRONIC FILE DIGITALLY SIGNED AND SEALED UNDER RULE 61G15-23.004, F.A.C.

REVISIONS	
DATE	DESCRIPTION

CITY OF PORT ORANGE
1000 CITY CENTER CIRCLE
PORT ORANGE, FL 32129

MERLYNN O. ANDERSON, P.E.
P.E. LICENSE NUMBER 83096

STANLEY CONSULTANTS, INC.
80 SPRING VISTA DRIVE
DEBARY, FL 32713

SJR2C LOOP TRAIL
FROM SOUTH OF SELIN CIR TO HERBERT ST

ROAD	COUNTY	FINANCIAL PROJECT ID
SPRUCE CREEK RD	VOLUSIA	439865-3-54-01

TYPICAL SECTION DETAILS

SHEET NO. 11

LEGEND

PLAN SYMBOLS

- CONCRETE REMOVAL
- 4" THICK CONCRETE SIDEWALK (PER FDOT INDEX 522-001)
- 6" THICK CONCRETE SIDEWALK/DRIVEWAY (PER FDOT INDEX 522-002)
- HEAVY DUTY CONCRETE SHARED USE PATH (SUP) (SEE DETAIL SHEET 11)

830 SELIN CIR
PARCEL ID: 630901010050
ALT KEY: 3606701
VOGEL BRADFORD W & TRUDI E
(O.R.B. 449, PG. 1274)

CURVE DATA ℄ CONSTRUCTION (C1)
PI STA. = 4+37.46
DELTA = 24° 26' 59"
D = 8° 48' 53"
T = 140.83
L = 277.37
R = 650.00
PC STA. = 2+96.63
PT STA. = 5+74.00

N
1" = 40'
0 10 40
Feet

APPARENT R/W
℄ OF CONSTRUCTION
CONST. 8' CONC. SIDEWALK
TREE REMOVAL (TYP.)
2+96.63 23.00 LT.
2+86.00 23.00 LT.
2+86.00 11.53 LT.
FLUSH LEVEL LANDING
DETECTABLE WARNINGS (TYP.)
BEGIN PROJECT STA. 2+75.77
SPRUCE CREEK ROAD
N 12° 10' 41" W
W. LINE O.R.B. 3808, PG. 3483
PC STA. 2+96.63
SELIN CIRCLE (DIRT ROAD)
3+65.23 35.61 LT.
3+58.74 23.00 LT.
3+41.99 12.00 LT.
C1
R 627'
R 20'
R 638'
4+49.09 46.09 LT.
MATCH EXIST.
3+83.17 35.33 LT.
3+87.48 23.11 LT.
APPARENT R/W
8' CONC. SIDEWALK
4+39.73 37.58 LT.
4+00.09 22.82 LT.
R48.0'
4+04.32 12.00 LT.
SAWCUT EXIST. ASPHALT AND CONST. CONC. DRIVEWAY
MATCHLINE STA. - 4+80.00
2+86.10 45.00 RT.
2+85.06 20.83 RT.
R5.0'
2+88.32 49.89 RT.
2+92.43 54.31 RT.
HALIFAX CANAL
INV. EL. -2.32'
INV. EL. -2.30'
5'x8' CONCRETE CULVERT
CR-G
R35'
UTILITY AND ACCESS EASEMENT (O.R.B. 5920, PG. 2088)
PRESCRIPTIVE R/W PER VOLUSIA COUNTY (TOP OF BANK)
CONST. TYPE F C&G
8' CONC. SIDEWALK
2+75.77 44.50 RT.
REPLACE EXIST. DETECTABLE WARNINGS
R13.0'
UTILITY VAULT
INV. EL. 0.42'
INV. EL. -2.30'
PRESCRIPTIVE R/W PER VOLUSIA COUNTY (TOP OF BANK)
5" CAPPED PIPE
SANITARY MANHOLE TOP EL. 7.94'
2+78.11 45.00 RT.
2+83.88 56.54 RT.
REPLACE EXIST. DETECTABLE WARNINGS
EXIST. LANDSCAPING TO BE REMOVED/REPLACED/RELOCATED
MATCH EXIST.
2+94.11 60.72 RT.
ZONE AE (EL. 5.0)
ZONE X
INV. EL. 1.46'
Q-413 OAK PL
PARCEL ID: 631019000170
ALT KEY: 3617703
BLEDSOE & COLEMAN GENERAL
(O.R.B. 2658, PG. 1843)
820 OAK ST
PARCEL ID: 630901010080
ALT KEY: 3606736
JENZANO GROUP LLC
(O.R.B. 5763, PG. 1364)

THE OFFICIAL RECORD OF THIS SHEET IS THE ELECTRONIC FILE DIGITALLY SIGNED AND SEALED UNDER RULE 61G15-23.004, F.A.C.

REVISIONS	
DATE	DESCRIPTION

CITY OF PORT ORANGE
1000 CITY CENTER CIRCLE
PORT ORANGE, FL 32129

MERLYNN O. ANDERSON, P.E.
P.E. LICENSE NUMBER 83096

STANLEY CONSULTANTS, INC.
80 SPRING VISTA DRIVE
DEBARY, FL 32713

SJR2C LOOP TRAIL
FROM SOUTH OF SELIN CIR TO HERBERT ST

ROAD	COUNTY	FINANCIAL PROJECT ID
SPRUCE CREEK RD	VOLUSIA	439865-3-54-01

ROADWAY PLAN

SHEET NO. 12

O'Neill, Karen 5/14/2025 12:31:44 PM Z:\2016 Projects\10962 (Port Orange)\TWO 09 - SUNTrail (SJR2C Loop) Spruce Creek Rd\CAD\439865\Roadway\PLANRD01.dwg

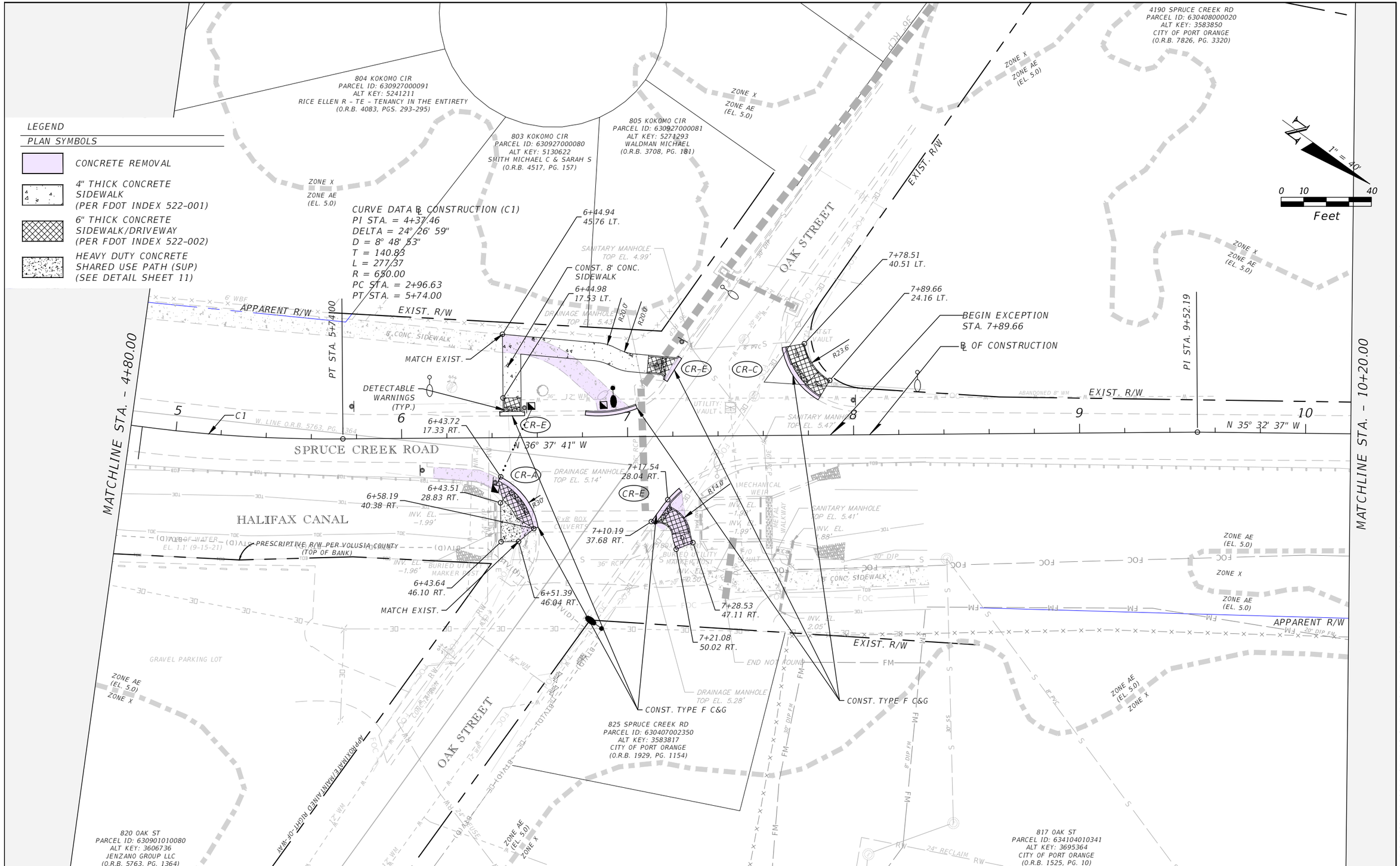

THE OFFICIAL RECORD OF THIS SHEET IS THE ELECTRONIC FILE DIGITALLY SIGNED AND SEALED UNDER RULE 61G15-23.004, F.A.C.

REVISIONS	
DATE	DESCRIPTION

CITY OF PORT ORANGE
1000 CITY CENTER CIRCLE
PORT ORANGE, FL 32129

MERLYNN O. ANDERSON, P.E.
P.E. LICENSE NUMBER 83096

STANLEY CONSULTANTS, INC.
80 SPRING VISTA DRIVE
DEBARY, FL 32713

SJR2C LOOP TRAIL
FROM SOUTH OF SELIN CIR TO HERBERT ST

ROAD	COUNTY	FINANCIAL PROJECT ID
SPRUCE CREEK RD	VOLUSIA	439865-3-54-01

ROADWAY PLAN

SHEET NO.
13

O'Neill, Karen 5/14/2025 12:31:50 PM Z:\2016 Projects\10962 (Port Orange)\TWO 09 - SUNTrail (SJR2C Loop) Spruce Creek Rd\CAD\439865\Roadway\PLANRD01.dwg

LEGEND

PLAN SYMBOLS

- CONCRETE REMOVAL
- 4" THICK CONCRETE SIDEWALK (PER FDOT INDEX 522-001)
- 6" THICK CONCRETE SIDEWALK/DRIVEWAY (PER FDOT INDEX 522-002)
- HEAVY DUTY ASPHALT SHARED USE PATH (SUP) (SEE DETAIL SHEET 11)

PARCEL ID: 633701280012
ALT KEY: 6334447
CITY OF PORT ORANGE
(O.R.B. 5399, PGS. 1067-1077)

725 DUNLAWTON AVE
PARCEL ID: 633701280010
ALT KEY: 3679873
UNITED STATES POSTAL SERVICE
(O.R.B. 2555, PG. 1998)

CURVE DATA ℄ CONSTRUCTION (C2)
PI STA. = 21+10.92
DELTA = 10° 42' 28"
D = 5° 43' 46"
T = 93.72
L = 186.89
R = 1000.00
PC STA. = 20+17.20
PT STA. = 22+04.09

1" = 40'
0 10 40
Feet

DUNLAWTON AVENUE (CR 421)

SAMMS AVENUE

SPRUCE CREEK ROAD

MATCHLINE STA. - 17+20.00

MATCHLINE STA. - 22+60.00

SPRUCE CREEK RD
PARCEL ID: 630408000120
ALT KEY: 3583957
STATE OF FLORIDA DOT
(O.R.B. 1799, PG. 613)

SPRUCE CREEK RD
PARCEL ID: 630407001820
ALT KEY: 4261231
CITY OF PORT ORANGE
(O.R.B. 5236, PG. 1068)

638 POWERS AVE
PARCEL ID: 630407001690
ALT KEY: 3583761
FLORIDA POWER & LIGHT COMPANY
(M.B. 10, PG. 138)

℄ OF CONSTRUCTION
APPARENT R/W
EXIST. R/W
EXIST. VEGETATION TO REMAIN
END EXCEPTION STA. 19+78.21
PI STA. 18+57.99
PI STA. 19+83.22
PC STA. 20+17.20
PT STA. 22+04.09
N 35° 32' 37" W
N 35° 59' 50" W
N 35° 21' 02" W
N 24° 38' 34" W
18
19
20
21
22
C2
CR-E
CR-G
19+84.95 26.16 RT.
19+91.49 38.93 RT. DETECTABLE WARNINGS (TYP.)
CONST. TYPE F C&G
19+78.21 52.71 RT.
19+89.74 40.79 RT.
19+93.04 53.35 RT.
19+99.30 40.50 RT.
19+95.89 67.65 RT.
MATCH EXIST.
19+97.79 77.02 RT.
R5.0'
R2.0'
20+05.79 61.50 RT.
20+01.32 73.53 RT.
CONST. CONCRETE SIDEWALK
19+94.79 31.44 RT.
19+87.29 29.93 RT.
ALUMINUM PIPE GUIDERAIL WITH THICKENED EDGE SIDEWALK
R4.0'
R13.0'
20+03.74 44.41 RT.
20+15.59 43.57 RT.
20+17.90 52.49 RT.
R5.0'
20+22.58 56.35 RT.
20+26.94 56.71 RT.
20+44.08 59.23 RT.
R30.0'
R20.0'
20+21.44 68.31 RT.
20+17.14 67.94 RT.
20+07.07 59.18 RT.
R2.0'
21+87.43 60.00 RT.
21+65.55 61.86 RT.
R40.0'
R102.0'
S-102
STA 20+96.68 (45.17 Rt.)
CONST. CD MES (1:2)
INDEX No. 430-021
FL 0.80 (18" X 18")
41LF 18" PIPE @0.50%
S-101
STA 20+85.00 (84.43 Rt.)
CONST. INLET TYPE C
INDEX No. 425-052
TOP EL. 4.00
FL 1.00 (18" X 18")
CONST. 12' HEAVY DUTY ASPHALT SUP
DRAINAGE MANHOLE TOP EL. 5.79'
DRAINAGE MANHOLE TOP EL. 5.64'
DRAINAGE MANHOLE TOP EL. 5.55'
DRAINAGE MANHOLE TOP EL. 5.78'
DRAINAGE MANHOLE TOP EL. 5.14' INV. EL. 2.18'
DRAINAGE MANHOLE TOP EL. 4.60' INV. EL. 1.81'
DRAINAGE MANHOLE TOP EL. 5.53'
CATCH BASIN TOP EL. 4.88'
CATCH BASIN TOP EL. 4.95'
CATCH BASIN TOP EL. 5.70'
INV. EL. -1.75
INV. EL. -1.59'
PEDESTRIAN CROSSING SIGNAL
FIBER OPTIC VAULT
FIBER OPTIC MARKER POST
BURIED GAS LINE MARKER POST
6" STEEL GAS MAIN
8" PVC REUSE
5'x8' BOX CULVERT
8' CONC. SIDEWALK
5' CONC. SIDEWALK
ZONE X
ZONE AE (EL. 6.0)
ZONE AE (EL. 5.0)
18" RCP
15" RCP
24" RCP
12" CIP FM

THE OFFICIAL RECORD OF THIS SHEET IS THE ELECTRONIC FILE DIGITALLY SIGNED AND SEALED UNDER RULE 61G15-23.004, F.A.C.

REVISIONS	
DATE	DESCRIPTION

CITY OF PORT ORANGE
1000 CITY CENTER CIRCLE
PORT ORANGE, FL 32129

MERLYNN O. ANDERSON, P.E.
P.E. LICENSE NUMBER 83096

STANLEY CONSULTANTS, INC.
80 SPRING VISTA DRIVE
DEBARY, FL 32713

SJR2C LOOP TRAIL
FROM SOUTH OF SELIN CIR TO HERBERT ST

ROAD	COUNTY	FINANCIAL PROJECT ID
SPRUCE CREEK RD	VOLUSIA	439865-3-54-01

ROADWAY PLAN

SHEET NO. 14

LEGEND

PLAN SYMBOLS

HEAVY DUTY ASPHALT SHARED USE PATH (SUP) (SEE DETAIL SHEET 11)

703 SAMMS AVE
PARCEL ID: 633701210021
ALT KEY: 3679024
PORT ORANGE INDUSTRIAL LLC
(O.R.B. 3334, PG. 1289)

SPRUCE CREEK RD
PARCEL ID: 633701210022
ALT KEY: 3679032
ATTN PROPERTY TAX DEPT

3000 SPRUCE CREEK RD
PARCEL ID: 633701210020
ALT KEY: 3679016
FLORIDA POWER & LIGHT COMPANY
(O.R.B. 2277, PG. 119)

1" = 40'

0 10 40

Feet

MATCHLINE STA. - 22+60.00

MATCHLINE STA. - 28+20.00

S-104
STA 23+60.04 (48.42 Rt.)
CONST. CD MES (1:2)
INDEX No. 430-021
(WITH INLINE CHECK VALVE)
FL 0.83 (18")

FILL EXISTING SWALES AND SOD ALL DISTURBED AREAS

REMOVE 50 LF OF EXIST. PIPE AND END TREATMENTS

S-106
STA 24+92.92 (49.05 Rt.)
CONST. CD MES (1:2)
INDEX No. 430-021
FL 2.00 (18")

℄ OF CONSTRUCTION

PI STA. 24+57.87

PI STA. 27+20.00

APPARENT R/W

ZONE X

ZONE AE (EL. 6.0)

INV. EL. 2.54'

CATCH BASIN TOP EL. 5.03 INV. EL.

SANITARY MANHOLE TOP EL. 5.46' INV. EL.

CATCH BASIN TOP EL. 5.34' INV. EL. 3.07'

INV. EL. 2.75'

6" STEEL GAS MAIN

12" RCP

8" CMP

8" BFP

8" RCP

23

24

25

26

27

28

N 24° 38' 34" W

N 23° 04' 01" W

N 66° 55' 59" E

SPRUCE CREEK ROAD

FILL EXISTING SWALE AND SOD ALL DISTURBED AREAS

43 LF 18" PIPE @0.50%

INV. EL. 2.01'

24+26.92
56.50 RT.

INV. EL. -1.40'

24+47.06
59.79 RT.

24+49.56
60.91 RT.

24+43.89
70.96 RT.

24+72.04
69.72 RT.

25+52.96
68.49 RT.

26+00.00
57.00 RT.

23+09.16
65.89 RT.

23+27.84
66.04 RT.

24+28.33
67.92 RT.

R940.0'

R90.0'

R48.0'

R102.0'

R90.0'

CATCH BASIN TOP EL. 5.56' INV. EL. -1.48'

INV. EL. 1.57'

4" DUCT (MAYBE FIBER OPTIC)

BURIED GAS LINE MARKER POST

4.32 4.30 4.29 4.59 4.74 4.44 4.89 5.04 5.19 5.34 5.50 5.64 5.71 4.10 4.01 4.36 4.39 3.85 3.73 3.64 3.61 3.46 3.43 3.43 3.72

RIGHTED FIBER OPTIC LINE MARKER POST

DRIVEWAY

EXIST. R/W

CONST. 12' HEAVY DUTY ASPHALT SUP

S-103
STA 23+60.04 (91.08 Rt.)
CONST. INLET TYPE C
INDEX No. 425-052
TOP EL. 3.43
FL 0.62 (18")

UNK INV

UNK INV

INV. EL. 2.71'

SANITARY MANHOLE TOP EL. 5.41' INV. EL.

EXISTING GUY WIRES TO BE RELOCATED BY FPL

16 LF OF ALUMINUM PIPE GUIDERAIL ON THICKENED EDGE SIDEWALK

CONST. 12' HEAVY DUTY ASPHALT SUP

REMOVE EXISTING VEGETATION

REMOVE EXIST. GRAVEL DRIVEWAY WITHIN R/W AND REPLACE WITH SOD

47 LF 18" PIPE @1.50%

DETECTABLE WARNING (TYP.)

S-105
STA 24+69.98 (90.14 Rt.)
CONST. SD MES (1:4)
INDEX No. 430-022
FL 2.71 (18")

TBM 1383
EL. 5.215'
SET IRC
TRAV PT LB 7808

POWERS AVENUE

638 POWERS AVE
PARCEL ID: 630407001690
ALT KEY: 3583761
FLORIDA POWER & LIGHT COMPANY
(M.B. 10, PG. 138)

REMOVE 20 LF OF EXIST. CMP SIDE DRAIN

639 POWERS AVE
PARCEL ID: 630407001670
ALT KEY: 3583752
GRUBBS FREDA L TR
(O.R.B. 5743, PG. 1494)

THE OFFICIAL RECORD OF THIS SHEET IS THE ELECTRONIC FILE DIGITALLY SIGNED AND SEALED UNDER RULE 61G15-23.004, F.A.C.

REVISIONS	
DATE	DESCRIPTION

CITY OF PORT ORANGE
1000 CITY CENTER CIRCLE
PORT ORANGE, FL 32129

MERLYNN O. ANDERSON, P.E.
P.E. LICENSE NUMBER 83096

STANLEY CONSULTANTS, INC.
80 SPRING VISTA DRIVE
DEBARY, FL 32713

SJR2C LOOP TRAIL
FROM SOUTH OF SELIN CIR TO HERBERT ST

ROAD	COUNTY	FINANCIAL PROJECT ID
SPRUCE CREEK RD	VOLUSIA	439865-3-54-01

ROADWAY PLAN

SHEET NO. 15

O'Neill, Karen 5/14/2025 12:32:01 PM Z:\2016 Projects\10962 (Port Orange)\TWO 09 - SUNTrail (SJR2C Loop) Spruce Creek Rd\CAD\439865\Roadway\PLANRD01.dwg

CURVE DATA ℄ CONSTRUCTION (C3)
PI STA. = 29+04.34
DELTA = 19° 21' 50"
D = 58° 27' 54"
T = 16.72
L = 33.12
R = 98.00
PC STA. = 28+87.62
PT STA. = 29+20.74

CURVE DATA ℄ CONSTRUCTION (C4)
PI STA. = 30+64.97
DELTA = 20° 00' 00"
D = 46° 12' 23"
T = 21.86
L = 43.28
R = 124.00
PC STA. = 30+43.11
PT STA. = 30+86.39

CURVE DATA ℄ CONSTRUCTION (C5)
PI STA. = 32+18.08
DELTA = 20° 00' 00"
D = 46° 12' 23"
T = 21.86
L = 43.28
R = 124.00
PC STA. = 31+96.21
PT STA. = 32+39.50

℄ CONSTRUCTION
EXIST. 0.75" GAS SERVICE LINE (APPROX. DEPTH 21")
CANAL VIEW BLVD.
APPARENT R/W
EXIST. R/W
CONST. 12' SIDEWALK
CONST. 12' HEAVY DUTY ASPHALT SUP
SPRUCE CREEK ROAD
ZONE AE (EL. 6.0)
ZONE X
PI STA. 27+20.00
PI STA. 27+67.00
PC STA. 28+87.62
PT STA. 29+20.74
PC STA. 30+43.11
PT STA. 30+86.39
PC STA. 31+96.21
PT STA. 32+39.50
28+87.62 10.00 RT.
28+73.70 10.00 RT.
28+33.70 10.00 RT.
29+20.74 10.00 RT.
29+75.37 9.67 RT.
BEGIN BOARDWALK STA. 29+84.06
29+63.40 10.00 RT.
N 22° 25' 51" W
N 42° 25' 51" W
N 02° 25' 51" W
C3
C4
C5
R108'
28
29
30
31
32
33
BENT No. 1 STA. 29+84.89
BENT No. 7 STA. 30+43.11
BENT No. 11 STA. 30+86.39
BENT No. 14 STA. 31+16.39
BENT No. 20 STA. 31+76.39
BENT No. 22 STA. 31+96.21
BENT No. 26 STA. 32+39.50
BENT No. 27 STA. 32+48.37
BENT No. 34 STA. 33+18.37
TREE REMOVAL (TYP.)
662 HERBERT ST
PARCEL ID: 630406000090
ALT KEY: 3583337
MEADOWS ELLIOT
(O.R.B. 7367, PG. 4881)
HERBERT ST
PARCEL ID: 63040600008A
ALT KEY: 5080030
CITY OF PORT ORANGE
(O.R.B. 3221, PG. 1200)
MATCHLINE STA. - 33+20.00
1" = 40'
END RAILING 29+84.06 12.00 RT.
END RAILING 29+84.06 20.00 RT.
29+75.37 22.33 RT.
CONST. GRAVITY WALL A, SCHEME 1, WITH ALUMINUM PIPE GUIDERAIL
ADJUST MANHOLE TO FINISHED GRADE
S-108
STA 28+92.24 (-2.98 Lt.)
CONST. CD MES (1:2)
INDEX No. 430-021
FL 0.36 (24")
S-107
STA 28+95.94 (25.25 Rt.)
CONST. INLET TYPE C
INDEX No. 425-052
FL 0.36 (24")
REMOVE 27 LF OF EXSIT. PIPE AND CONST. 29LF 24" PIPE @0.00%
40' CROSS SLOPE TRANSITION (2.0% to 0.0%)
-2.00%
0.00%
25' UPLAND BUFFER
TBM 1383
EL. 5.215'
SET IRC
TRAV PT LB 7808
A1
A2
A3
A4
A5
A6
A7
A8
B1-1
B1-2
BURIED GAS LINE MARKER POST
DRAINAGE MANHOLE TOP EL. 6.50'
GAS LINE 6" STEEL GAS MAIN
0.75" STEEL GAS SERVICE LINE

LEGEND

PLAN SYMBOLS

4" THICK CONCRETE SIDEWALK (PER FDOT INDEX 522-001)

HEAVY DUTY ASPHALT SHARED USE PATH (SUP) (SEE DETAIL SHEET 11)

8' WIDE BOARDWALK (SEE DETAIL SHEET B1-02)

K = 4
20' V.C.
+37.05 EL. 4.95
VPI + 47.05 EL. 4.85
+57.05 EL. 5.24
STA. +29+84.06
Elev. = 10.25
BEGIN BOARDWALK
STA. 29+84.06
ELEV. 10.25
0.00%
3.94%
-1.00%
S-107
PGL
EXISTING GRADE AT PGL
EXIST. 0.75" GAS (APPROX. DEPTH 21")
BEGIN PROFILE GRADE
STA. 28+23.70
ELEV. 5.08
EXIST. 10" WATER (APPROX. DEPTH 36")
EXIST. 10" WATER (APPROX. DEPTH 36")
EXIST. 6" GAS (APPROX. DEPTH 30")
CONTRACTOR TO NOTIFY TECO GAS PRIOR TO ANY WORK NEAR EXISTING GAS MAINS AND SERVICE LINES
CONTRACTOR TO NOTIFY CITY OF PORT ORANGE PRIOR TO ANY WORK NEAR EXISTING WATER MAINS
20
10
0
-10
28+00
29+00
30+00
31+00
32+00
33+00
1" = 40' Horizontal
1" = 8' Vertical

THE OFFICIAL RECORD OF THIS SHEET IS THE ELECTRONIC FILE DIGITALLY SIGNED AND SEALED UNDER RULE 61G15-23.004, F.A.C.

REVISIONS	
DATE	DESCRIPTION

CITY OF PORT ORANGE
1000 CITY CENTER CIRCLE
PORT ORANGE, FL 32129

MERLYNN O. ANDERSON, P.E.
P.E. LICENSE NUMBER 83096
STANLEY CONSULTANTS, INC.
80 SPRING VISTA DRIVE
DEBARY, FL 32713

SJR2C LOOP TRAIL
FROM SOUTH OF SELIN CIR TO HERBERT ST

ROAD	COUNTY	FINANCIAL PROJECT ID
SPRUCE CREEK RD	VOLUSIA	439865-3-54-01

ROADWAY PLAN AND PROFILE

SHEET NO. 16

LEGEND

PLAN SYMBOLS

- CONCRETE REMOVAL
- 4" THICK CONCRETE SIDEWALK (PER FDOT INDEX 522-001)
- 6" THICK CONCRETE SIDEWALK/DRIVEWAY (PER FDOT INDEX 522-002)
- 8' WIDE BOARDWALK (SEE DETAIL SHEET B1-02)

MATCHLINE STA. - 33+20.00

℄ CONSTRUCTION

BENT No. 41
STA. 33+88.37

TREE REMOVAL (TYP.)

BENT No. 48
STA. 34+58.37

BENT No. 55
STA. 35+28.37

BENT No. 62
STA. 35+98.37

BENT No. 70
STA. 36+78.37

BENT No. 69
STA. 36+68.37

6TH ST
PARCEL ID: 630406000091
ALT KEY: 5578518
CITY OF PORT ORANGE
(O.R.B. 4060, PGS. 2312-2313)

END BOARDWALK
STA. 36+79.20

CONST. GRAVITY WALL B, SCHEME 1, WITH ALUMINUM PIPE HANDRAIL

36+97.66
12.00 RT.

36+93.79
12.00 RT.

ZONE AE (EL 6.0)

ZONE X

1" = 40'

APPARENT R/W

37+61.75
18.67 LT.

DETECTABLE WARNINGS (TYP.)

CONST. 8' SIDEWALK

37+42.36
11.29 LT.

SANITARY MANHOLE
TOP EL. 8.70'

R 33'

R 45'

EXIST. R/W

HERBERT STREET

655 HERBE
PARCEL ID: 630
ALT KEY: 4
GN & TN
(O.R.B. 6611,

37+86.46
16.73 LT.

653 HERBE
PARCEL ID: 630
ALT KEY: 47
GN & TN
(O.R.B. 6913, P

REMOVE EXIST. CONC.

CONST. 8' SIDEWALK

38+17.56
15.02 LT.

8' CONC. SIDEWALK

5.00%

-4.13%

2.00%

37+25.97
1.98 RT.

REMOVE 8 LF EXIST. FENCE WITHIN EXIST. R/W

6TH STREET

END PROJECT
STA. 38+17.56

34

35

36

37

TB-3

TB-4

HERBERT ST
PARCEL ID: 630406000008A
ALT KEY: 5080030
CITY OF PORT ORANGE
(O.R.B. 3221, PG. 1200)

36+79.87
12.00 RT.

A1

A2

A3

25 UPLAND BUFFER

8' STUCCO WALL

7' CLF

4' CLF

BURIED GAS LINE MARKER POST

626 6TH ST
PARCEL ID: 630402190110
ALT KEY: 3582683
GENSLER BRENDA A
(O.R.B. 7575, PG. 2143)

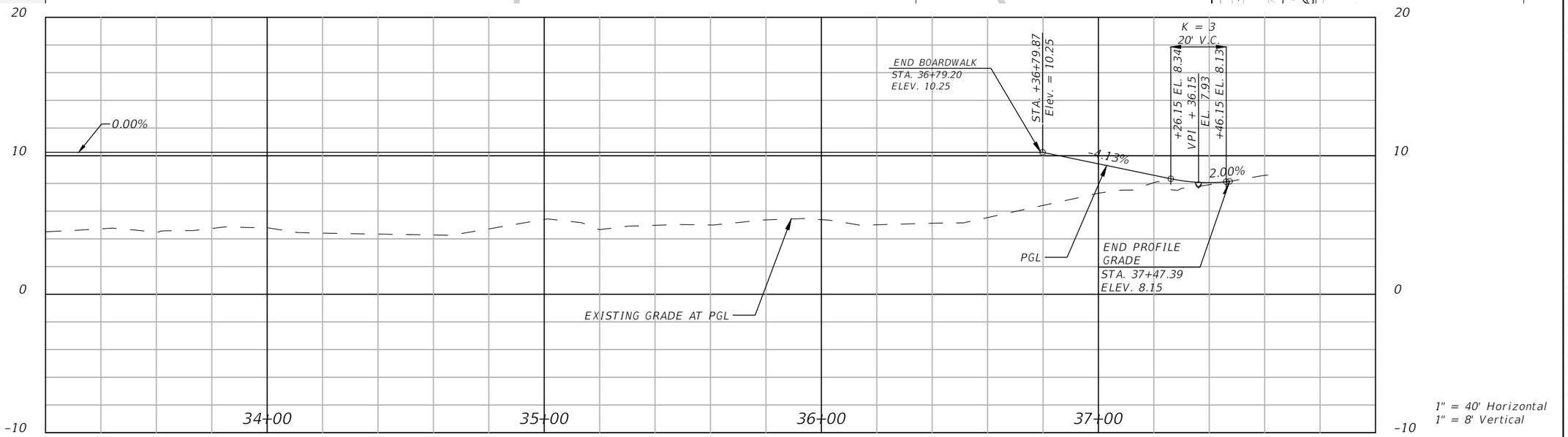

1" = 40' Horizontal
1" = 8' Vertical

THE OFFICIAL RECORD OF THIS SHEET IS THE ELECTRONIC FILE DIGITALLY SIGNED AND SEALED UNDER RULE 61G15-23.004, F.A.C.

REVISIONS	
DATE	DESCRIPTION

CITY OF PORT ORANGE
1000 CITY CENTER CIRCLE
PORT ORANGE, FL 32129

MERLYNN O. ANDERSON, P.E.
P.E. LICENSE NUMBER 83096

STANLEY CONSULTANTS, INC.
80 SPRING VISTA DRIVE
DEBARY, FL 32713

SJR2C LOOP TRAIL
FROM SOUTH OF SELIN CIR TO HERBERT ST

ROAD	COUNTY	FINANCIAL PROJECT ID
SPRUCE CREEK RD	VOLUSIA	439865-3-54-01

ROADWAY PLAN AND PROFILE

SHEET NO. 17

O'Neill, Karen 5/14/2025 12:32:51 PM Z:\2016 Projects\10962 (Port Orange)\TWO 09 - SUNTrail (SJR2C Loop) Spruce Creek Rd\CAD\439865\Roadway\PLPRRD01.dwg

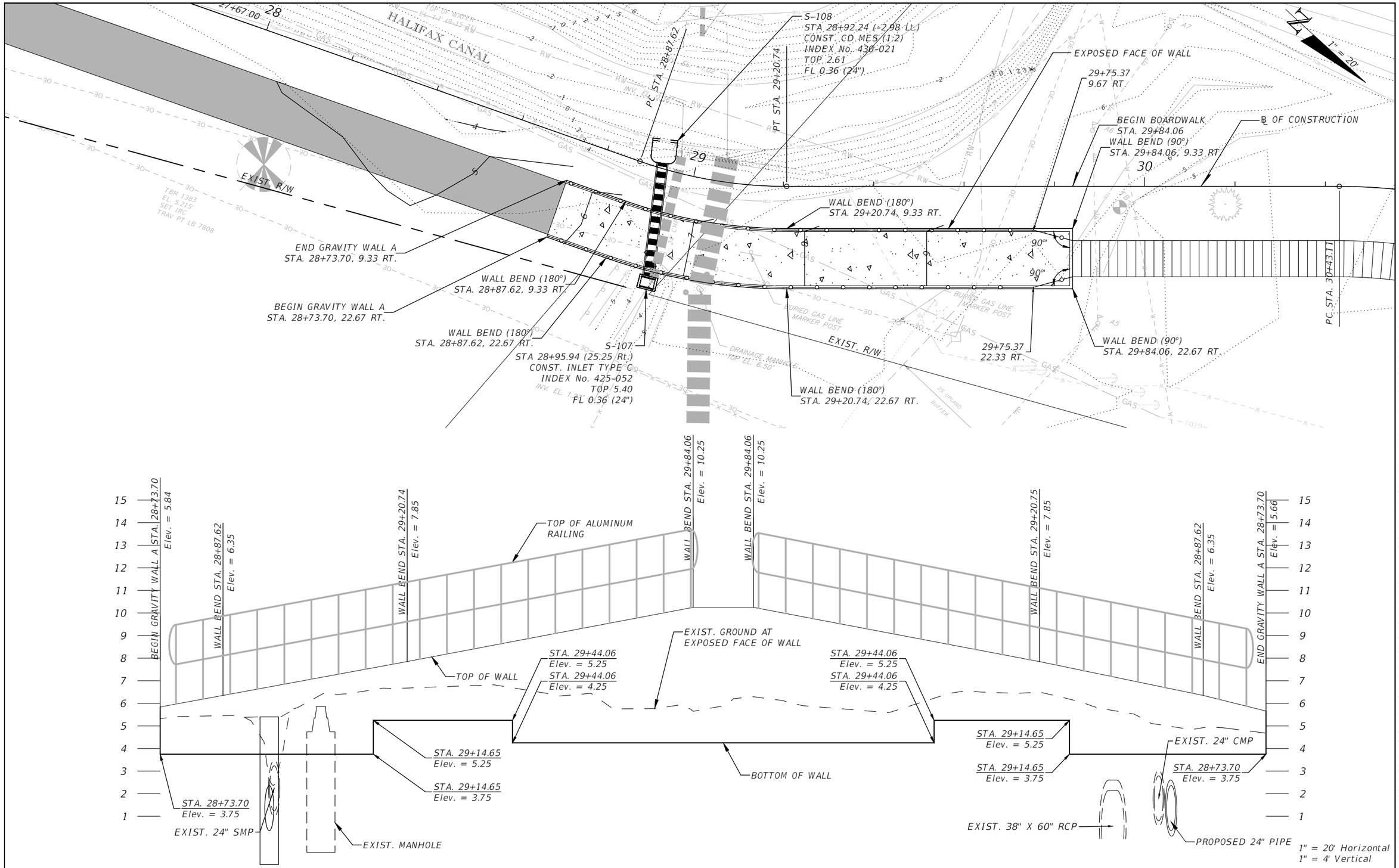

THE OFFICIAL RECORD OF THIS SHEET IS THE ELECTRONIC FILE DIGITALLY SIGNED AND SEALED UNDER RULE 61G15-23.004, F.A.C.

REVISIONS	
DATE	DESCRIPTION

CITY OF PORT ORANGE
1000 CITY CENTER CIRCLE
PORT ORANGE, FL 32129

MERLYNN O. ANDERSON, P.E.
P.E. LICENSE NUMBER 83096

STANLEY CONSULTANTS, INC.
80 SPRING VISTA DRIVE
DEBARY, FL 32713

SJR2C LOOP TRAIL
FROM SOUTH OF SELIN CIR TO HERBERT ST

ROAD	COUNTY	FINANCIAL PROJECT ID
SPRUCE CREEK RD	VOLUSIA	439865-3-54-01

GRAVITY WALL PLAN & PROFILE WALL A

SHEET NO. 18

O'Neill, Karen 5/14/2025 12:33:15 PM Z:\2016 Projects\10962 (Port Orange)\TWO 09 - SUNTrail (SJR2C Loop) Spruce Creek Rd\CAD\439865\Roadway\PLPRRD_WALL01.dwg

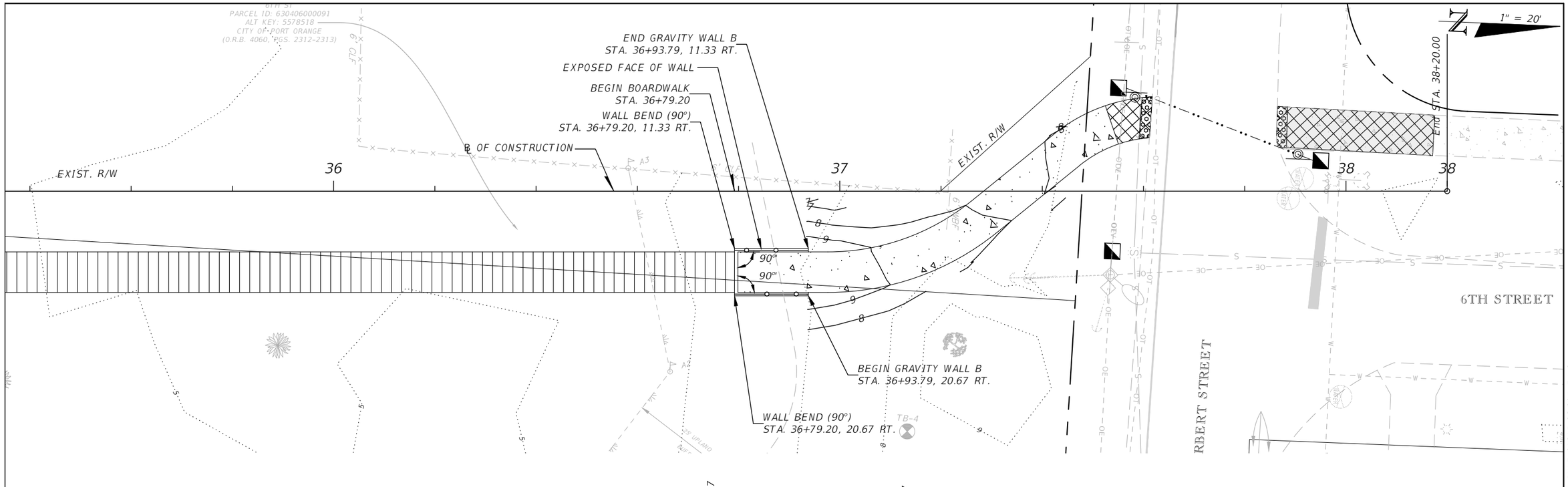

THE OFFICIAL RECORD OF THIS SHEET IS THE ELECTRONIC FILE DIGITALLY SIGNED AND SEALED UNDER RULE 61G15-23.004, F.A.C.

REVISIONS	
DATE	DESCRIPTION

CITY OF PORT ORANGE
1000 CITY CENTER CIRCLE
PORT ORANGE, FL 32129

MERLYNN O. ANDERSON, P.E.
P.E. LICENSE NUMBER 83096

STANLEY CONSULTANTS, INC.
80 SPRING VISTA DRIVE
DEBARY, FL 32713

SJR2C LOOP TRAIL
FROM SOUTH OF SELIN CIR TO HERBERT ST

ROAD	COUNTY	FINANCIAL PROJECT ID
SPRUCE CREEK RD	VOLUSIA	439865-3-54-01

GRAVITY WALL PLAN & PROFILE WALL B

SHEET NO. 19

O'Neill, Karen 5/14/2025 12:33:20 PM Z:\2016 Projects\10962 (Port Orange)\TWO 09 - SUNTrail (SJR2C Loop) Spruce Creek Rd\CAD\439865\Roadway\PLPRRD_WALL01.dwg

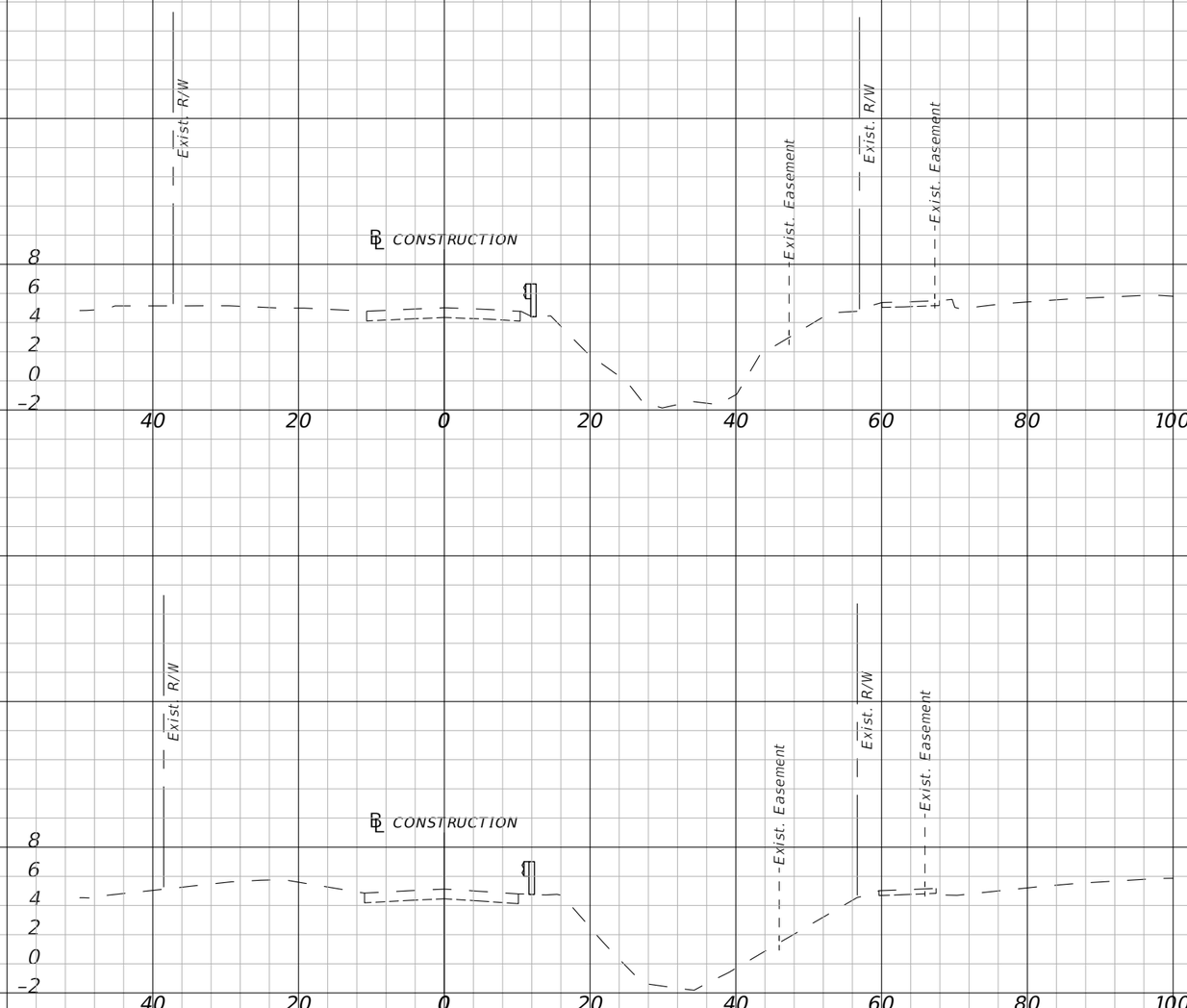

2+00.00

1+50.00

1" = 20' Horizontal
1" = 10' Vertical

THE OFFICIAL RECORD OF THIS SHEET IS THE ELECTRONIC FILE DIGITALLY SIGNED AND SEALED UNDER RULE 61G15-23.004, F.A.C.

REVISIONS	
DATE	DESCRIPTION

CITY OF PORT ORANGE
1000 CITY CENTER CIRCLE
PORT ORANGE, FL 32129

MERLYNN O. ANDERSON, P.E.
P.E. LICENSE NUMBER 83096

STANLEY CONSULTANTS, INC.
80 SPRING VISTA DRIVE
DEBARY, FL 32713

SJR2C LOOP TRAIL
FROM SOUTH OF SELIN CIR TO HERBERT ST

ROAD	COUNTY	FINANCIAL PROJECT ID
SPRUCE CREEK RD	VOLUSIA	439865-3-54-01

CROSS SECTION

SHEET NO. 20

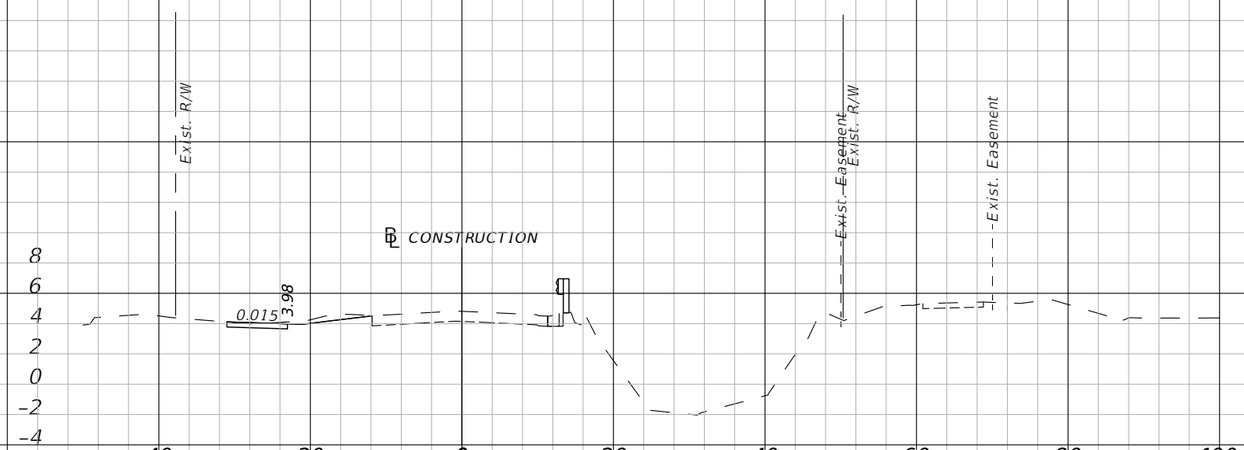

3+00.00

BEGIN PROJECT
2+75.77

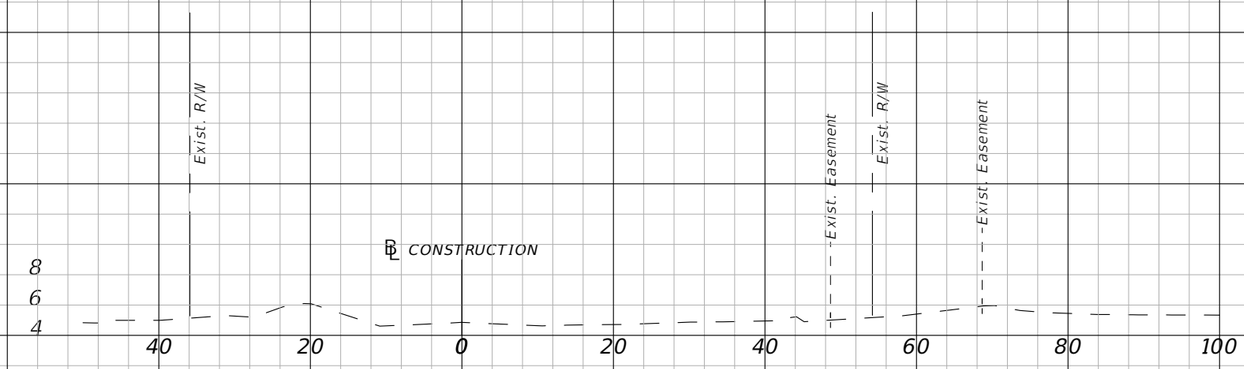

2+50.00

1" = 20' Horizontal
1" = 10' Vertical

THE OFFICIAL RECORD OF THIS SHEET IS THE ELECTRONIC FILE DIGITALLY SIGNED AND SEALED UNDER RULE 61G15-23.004, F.A.C.

REVISIONS	
DATE	DESCRIPTION

CITY OF PORT ORANGE
1000 CITY CENTER CIRCLE
PORT ORANGE, FL 32129

MERLYNN O. ANDERSON, P.E.
P.E. LICENSE NUMBER 83096

STANLEY CONSULTANTS, INC.
80 SPRING VISTA DRIVE
DEBARY, FL 32713

SJR2C LOOP TRAIL
FROM SOUTH OF SELIN CIR TO HERBERT ST

ROAD	COUNTY	FINANCIAL PROJECT ID
SPRUCE CREEK RD	VOLUSIA	439865-3-54-01

CROSS SECTION

SHEET NO.
21

5/14/2025 12:34:29 PM 5/14/2025 12:32:29 PM Projects\10962 (Port Orange)\TWO 09 - SUNTrail (SJR2C Loop) Spruce Creek Rd\CAD\439865\Roadway\RDXSRD01.dwg

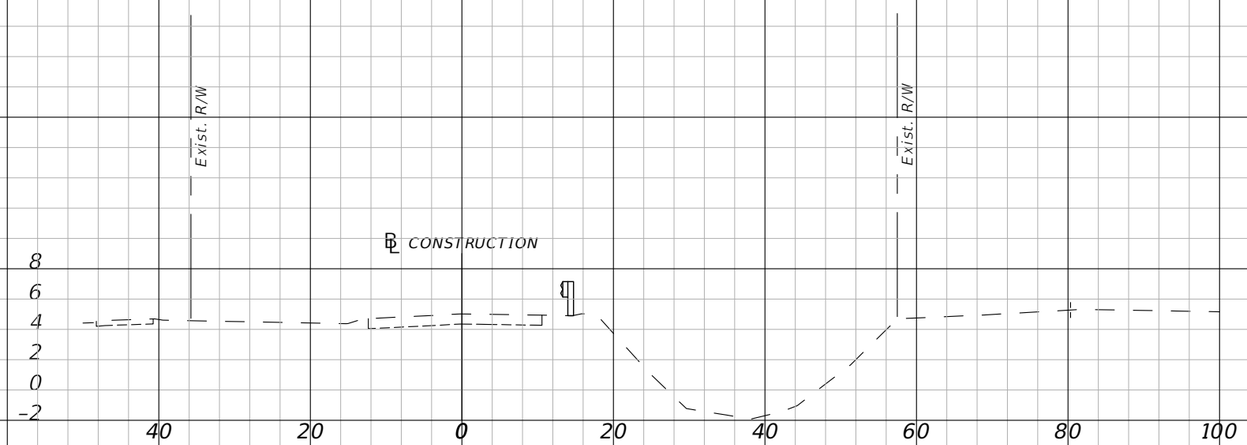

1" = 20' Horizontal
1" = 10' Vertical

THE OFFICIAL RECORD OF THIS SHEET IS THE ELECTRONIC FILE DIGITALLY SIGNED AND SEALED UNDER RULE 61G15-23.004, F.A.C.

REVISIONS	
DATE	DESCRIPTION

CITY OF PORT ORANGE
1000 CITY CENTER CIRCLE
PORT ORANGE, FL 32129

MERLYNN O. ANDERSON, P.E.
P.E. LICENSE NUMBER 83096

STANLEY CONSULTANTS, INC.
80 SPRING VISTA DRIVE
DEBARY, FL 32713

SJR2C LOOP TRAIL
FROM SOUTH OF SELIN CIR TO HERBERT ST

ROAD	COUNTY	FINANCIAL PROJECT ID
SPRUCE CREEK RD	VOLUSIA	439865-3-54-01

CROSS SECTION

SHEET NO.
22

5/14/2025 12:34:34 PM 5/14/2025 12:34:34 PM 4:32:06 Projects\10962 (Port Orange)\TWO 09 - SUNTrail (SJR2C Loop) Spruce Creek Rd\CAD\439865\Roadway\RDXSRD01.dwg

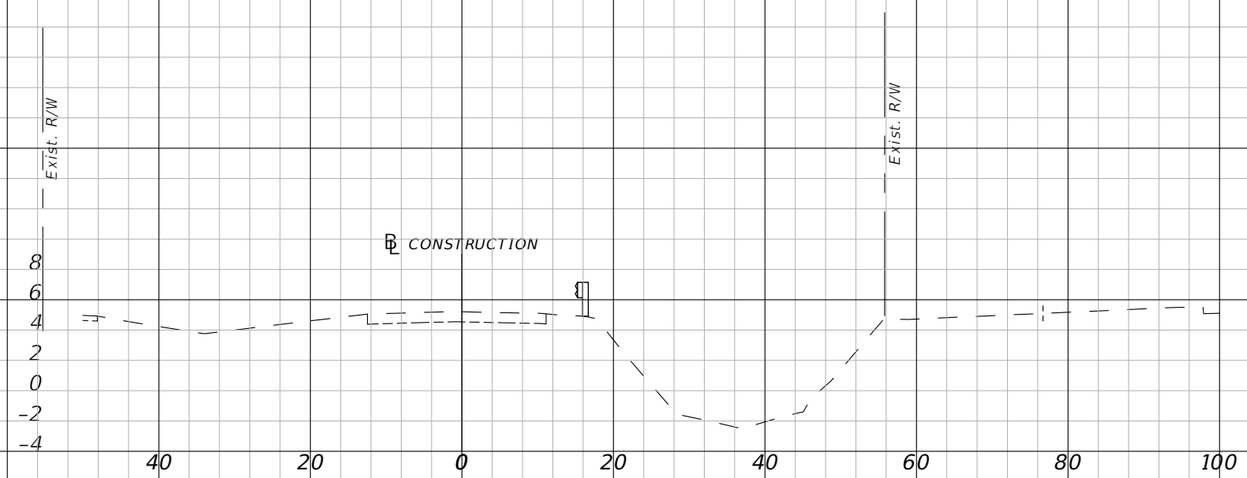

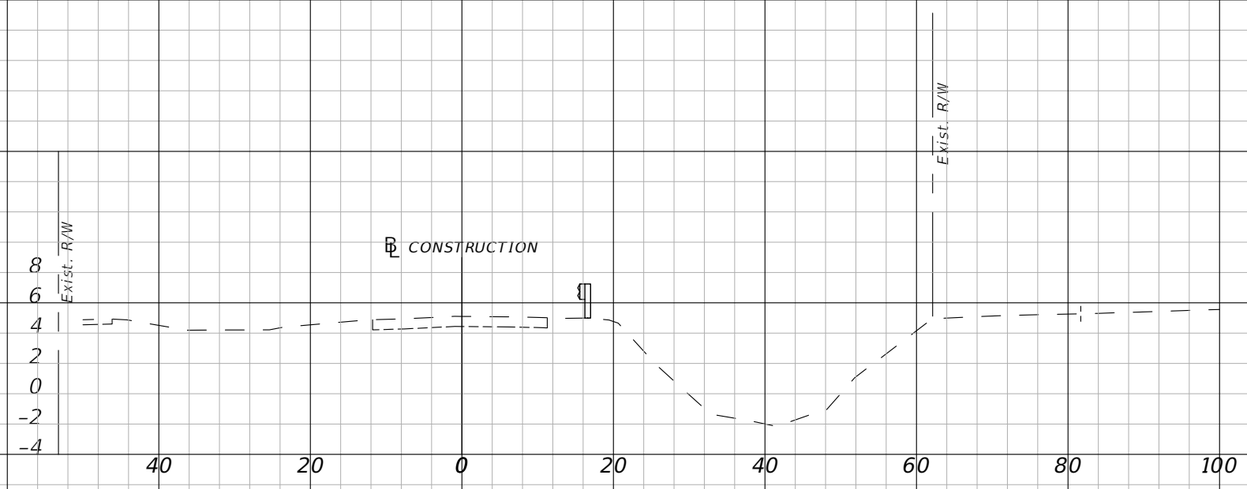

1" = 20' Horizontal
1" = 10' Vertical

THE OFFICIAL RECORD OF THIS SHEET IS THE ELECTRONIC FILE DIGITALLY SIGNED AND SEALED UNDER RULE 61G15-23.004, F.A.C.

REVISIONS	
DATE	DESCRIPTION

CITY OF PORT ORANGE
1000 CITY CENTER CIRCLE
PORT ORANGE, FL 32129

MERLYNN O. ANDERSON, P.E.
P.E. LICENSE NUMBER 83096

STANLEY CONSULTANTS, INC.
80 SPRING VISTA DRIVE
DEBARY, FL 32713

SJR2C LOOP TRAIL
FROM SOUTH OF SELIN CIR TO HERBERT ST

ROAD	COUNTY	FINANCIAL PROJECT ID
SPRUCE CREEK RD	VOLUSIA	439865-3-54-01

CROSS SECTION

SHEET NO.
23

5/14/2025 12:34:39 PM 5/14/2025 12:34:39 PM 4:39:06 Projects\10962 (Port Orange)\TWO 09 - SUNTrail (SJR2C Loop) Spruce Creek Rd\CAD\439865\Roadway\RDXSRD01.dwg

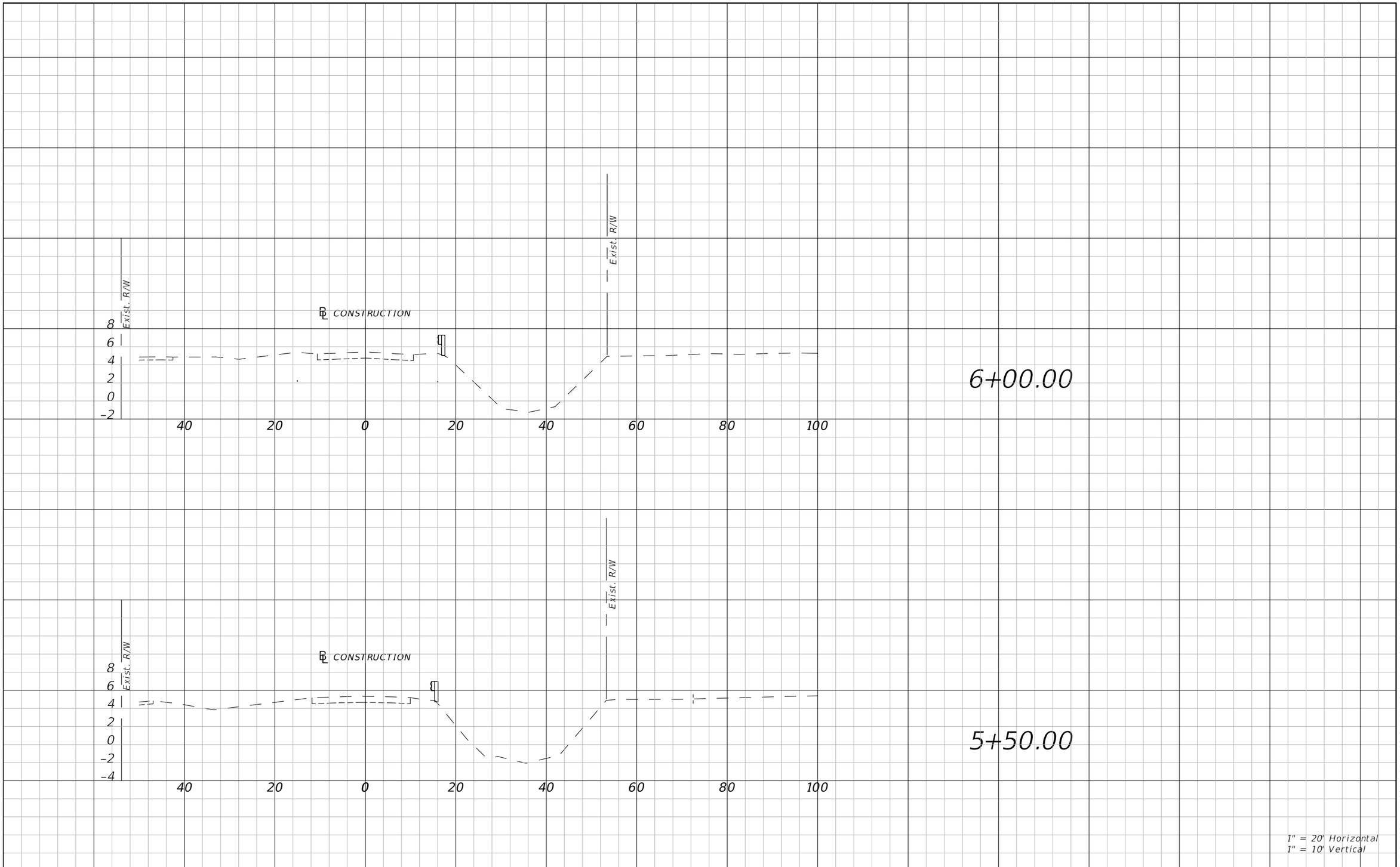

THE OFFICIAL RECORD OF THIS SHEET IS THE ELECTRONIC FILE DIGITALLY SIGNED AND SEALED UNDER RULE 61G15-23.004, F.A.C.

REVISIONS	
DATE	DESCRIPTION

CITY OF PORT ORANGE
1000 CITY CENTER CIRCLE
PORT ORANGE, FL 32129

MERLYNN O. ANDERSON, P.E.
P.E. LICENSE NUMBER 83096

STANLEY CONSULTANTS, INC.
80 SPRING VISTA DRIVE
DEBARY, FL 32713

SJR2C LOOP TRAIL
FROM SOUTH OF SELIN CIR TO HERBERT ST

ROAD	COUNTY	FINANCIAL PROJECT ID
SPRUCE CREEK RD	VOLUSIA	439865-3-54-01

CROSS SECTION

SHEET NO.
24

5/14/2025 12:34:44 PM 5/14/2025 12:34:40 PM Projects\10962 (Port Orange)\TWO 09 - SUNTrail (SJR2C Loop) Spruce Creek Rd\CAD\439865\Roadway\RDXSRD01.dwg

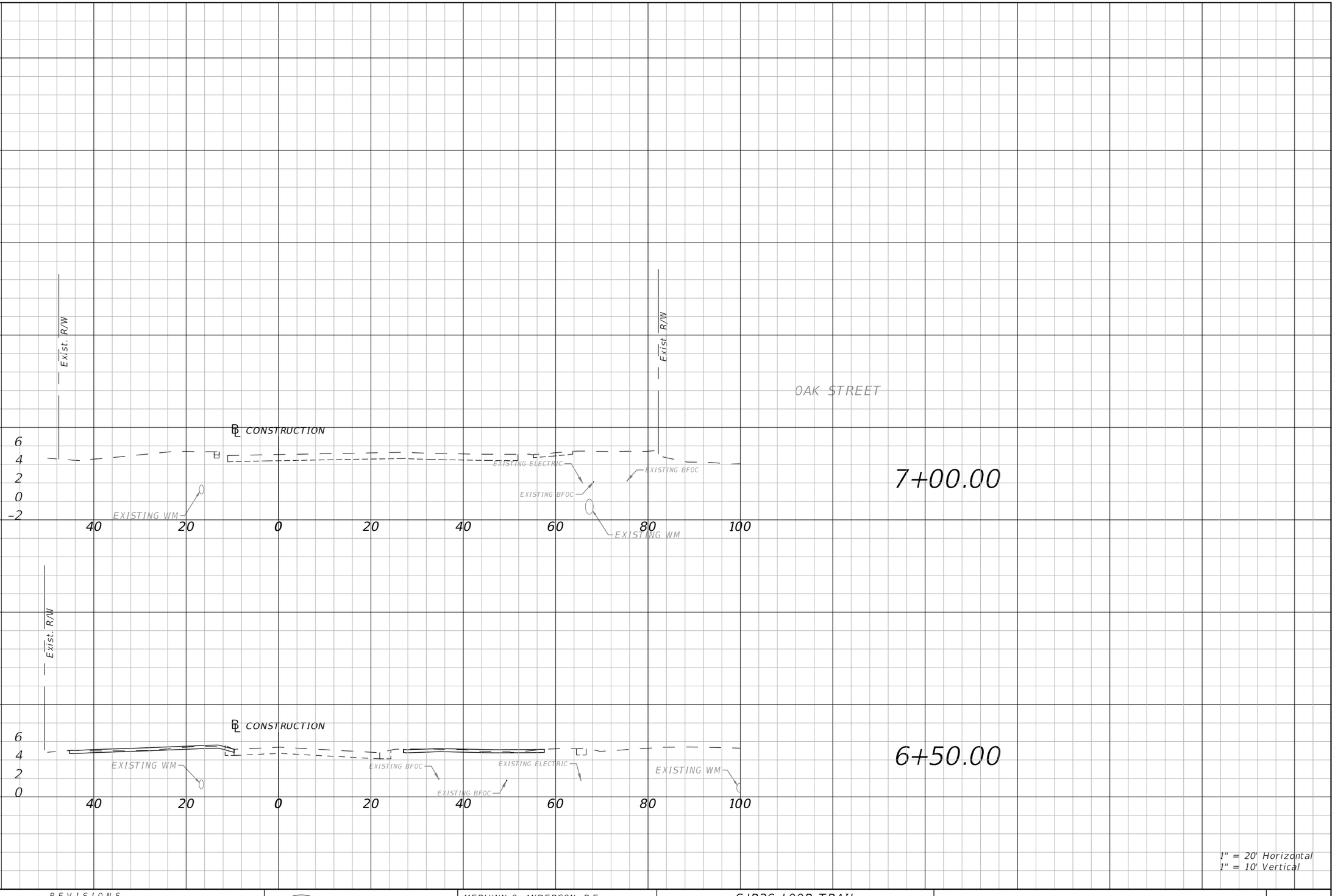

1" = 20' Horizontal
1" = 10' Vertical

THE OFFICIAL RECORD OF THIS SHEET IS THE ELECTRONIC FILE DIGITALLY SIGNED AND SEALED UNDER RULE 61G15-23.004, F.A.C.

REVISIONS	
DATE	DESCRIPTION

CITY OF PORT ORANGE
1000 CITY CENTER CIRCLE
PORT ORANGE, FL 32129

MERLYNN O. ANDERSON, P.E.
P.E. LICENSE NUMBER 83096

STANLEY CONSULTANTS, INC.
80 SPRING VISTA DRIVE
DEBARY, FL 32713

SJR2C LOOP TRAIL
FROM SOUTH OF SELIN CIR TO HERBERT ST

ROAD	COUNTY	FINANCIAL PROJECT ID
SPRUCE CREEK RD	VOLUSIA	439865-3-54-01

CROSS SECTION

SHEET NO. 25

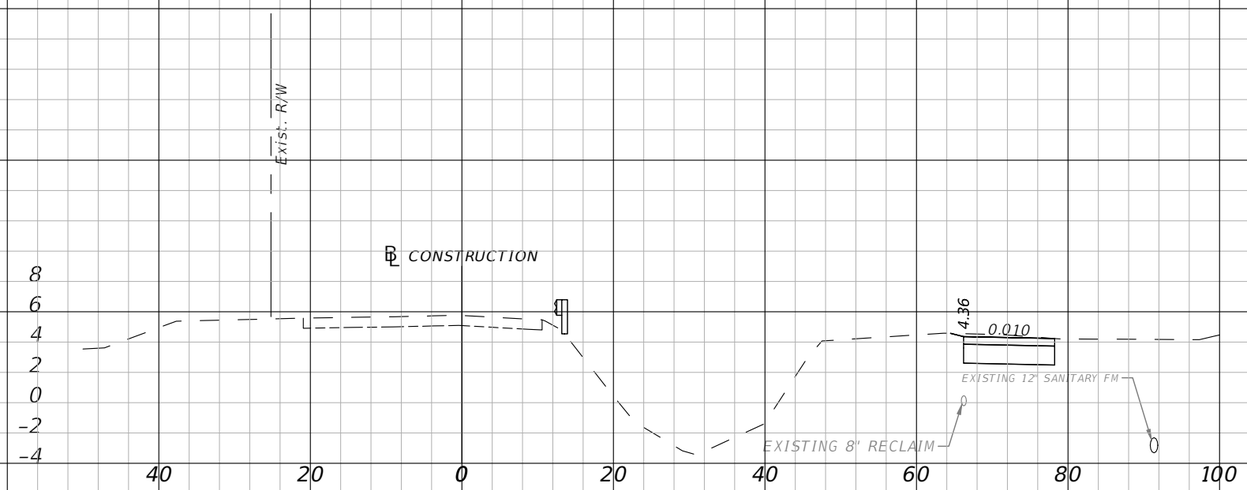

21+00.00

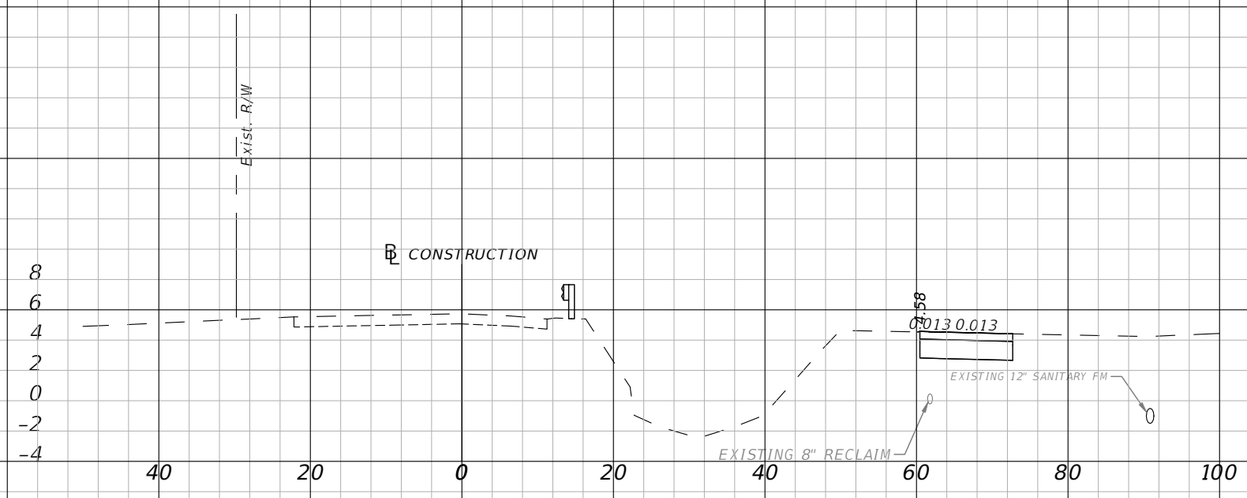

20+50.00

1" = 20' Horizontal
1" = 10' Vertical

THE OFFICIAL RECORD OF THIS SHEET IS THE ELECTRONIC FILE DIGITALLY SIGNED AND SEALED UNDER RULE 61G15-23.004, F.A.C.

REVISIONS	
DATE	DESCRIPTION

CITY OF PORT ORANGE
1000 CITY CENTER CIRCLE
PORT ORANGE, FL 32129

MERLYNN O. ANDERSON, P.E.
P.E. LICENSE NUMBER 83096

STANLEY CONSULTANTS, INC.
80 SPRING VISTA DRIVE
DEBARY, FL 32713

SJR2C LOOP TRAIL
FROM SOUTH OF SELIN CIR TO HERBERT ST

ROAD	COUNTY	FINANCIAL PROJECT ID
SPRUCE CREEK RD	VOLUSIA	439865-3-54-01

CROSS SECTION

SHEET NO.
26

5/14/2025 12:34:54 PM 5/14/2025 12:34:54 PM 4:52:06 Projects\10962 (Port Orange)\TWO 09 - SUNTrail (SJR2C Loop) Spruce Creek Rd\CAD\439865\Roadway\RDXSRD01.dwg

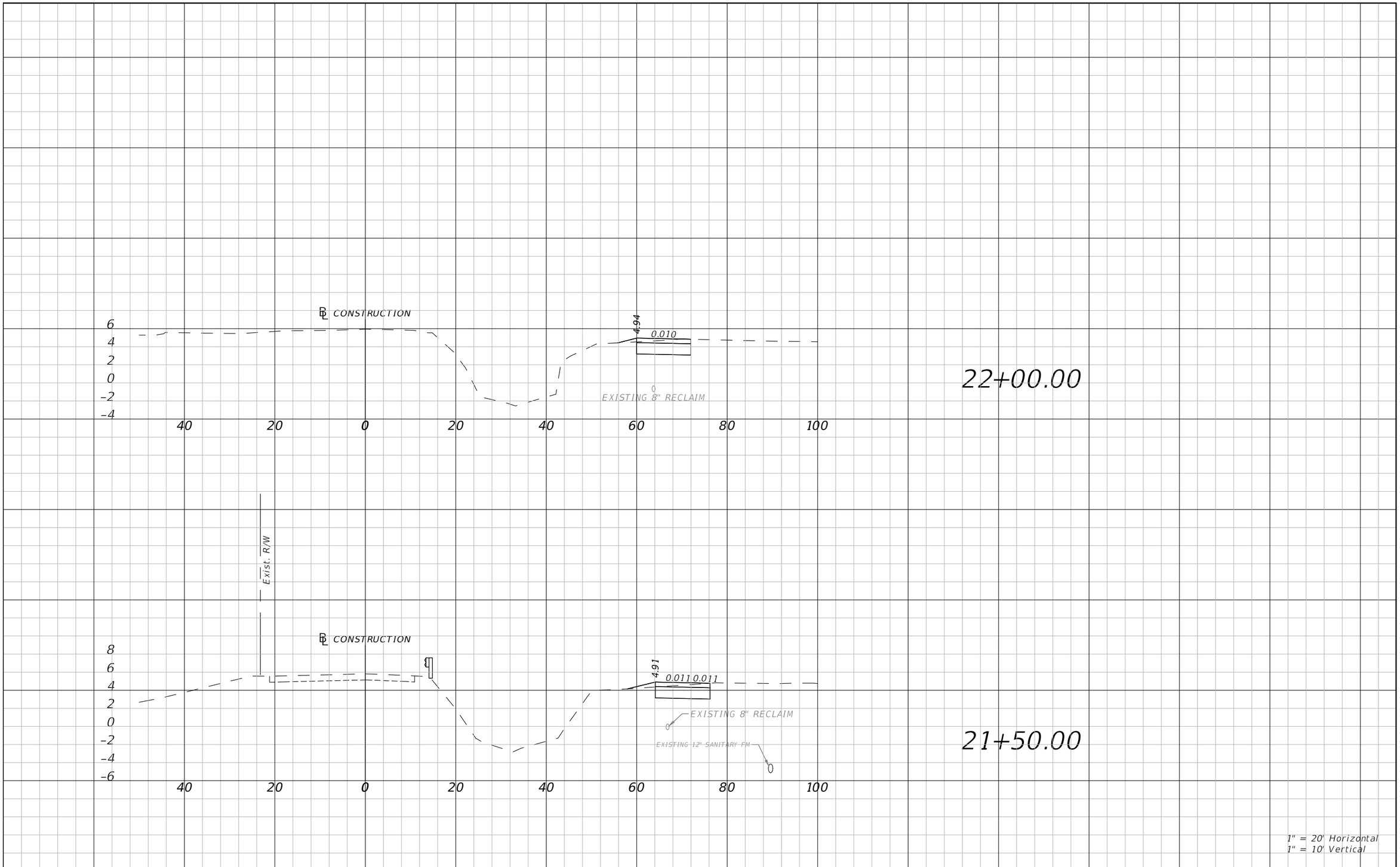

THE OFFICIAL RECORD OF THIS SHEET IS THE ELECTRONIC FILE DIGITALLY SIGNED AND SEALED UNDER RULE 61G15-23.004, F.A.C.

REVISIONS	
DATE	DESCRIPTION

CITY OF PORT ORANGE
1000 CITY CENTER CIRCLE
PORT ORANGE, FL 32129

MERLYNN O. ANDERSON, P.E.
P.E. LICENSE NUMBER 83096

STANLEY CONSULTANTS, INC.
80 SPRING VISTA DRIVE
DEBARY, FL 32713

SJR2C LOOP TRAIL
FROM SOUTH OF SELIN CIR TO HERBERT ST

ROAD	COUNTY	FINANCIAL PROJECT ID
SPRUCE CREEK RD	VOLUSIA	439865-3-54-01

CROSS SECTION

SHEET NO.
27

5/14/2025 12:34:59 PM 5/14/2025 12:34:59 PM Projects\10962 (Port Orange)\TWO 09 - SUNTrail (SJR2C Loop) Spruce Creek Rd\CAD\439865\Roadway\RDXSRD01.dwg

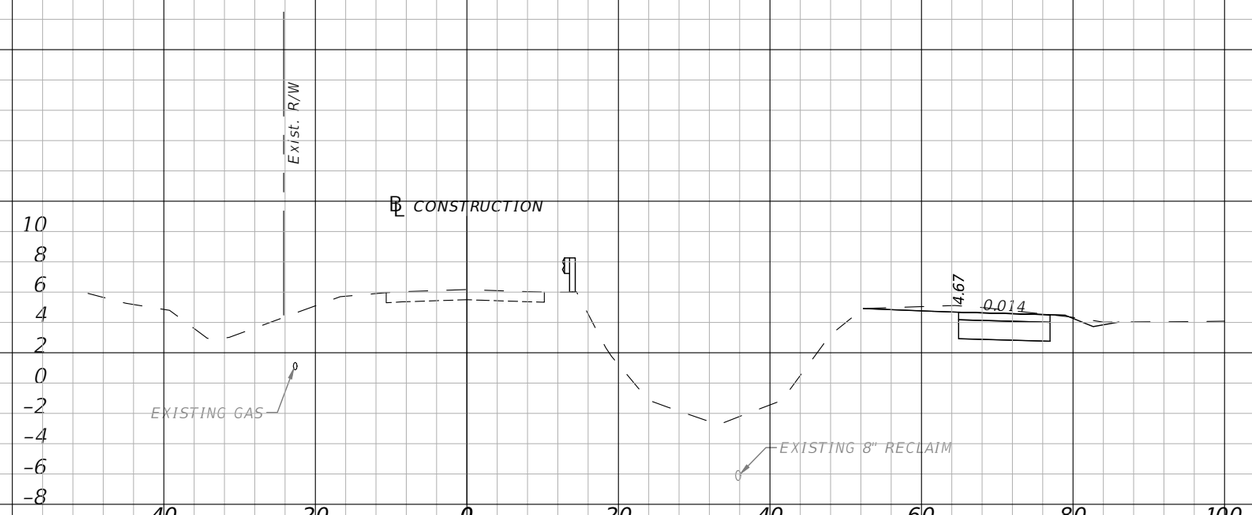

23+00.00



22+50.00

1" = 20' Horizontal
1" = 10' Vertical

THE OFFICIAL RECORD OF THIS SHEET IS THE ELECTRONIC FILE DIGITALLY SIGNED AND SEALED UNDER RULE 61G15-23.004, F.A.C.

REVISIONS	
DATE	DESCRIPTION

CITY OF PORT ORANGE
1000 CITY CENTER CIRCLE
PORT ORANGE, FL 32129

MERLYNN O. ANDERSON, P.E.
P.E. LICENSE NUMBER 83096

STANLEY CONSULTANTS, INC.
80 SPRING VISTA DRIVE
DEBARY, FL 32713

SJR2C LOOP TRAIL
FROM SOUTH OF SELIN CIR TO HERBERT ST

ROAD	COUNTY	FINANCIAL PROJECT ID
SPRUCE CREEK RD	VOLUSIA	439865-3-54-01

CROSS SECTION

SHEET NO.
28

5/14/2025 12:35:04 PM 5/14/2025 12:35:04 PM 5:\2016 Projects\10962 (Port Orange)\TWO 09 - SUNTrail (SJR2C Loop) Spruce Creek Rd\CAD\439865\Roadway\RDXSRD01.dwg

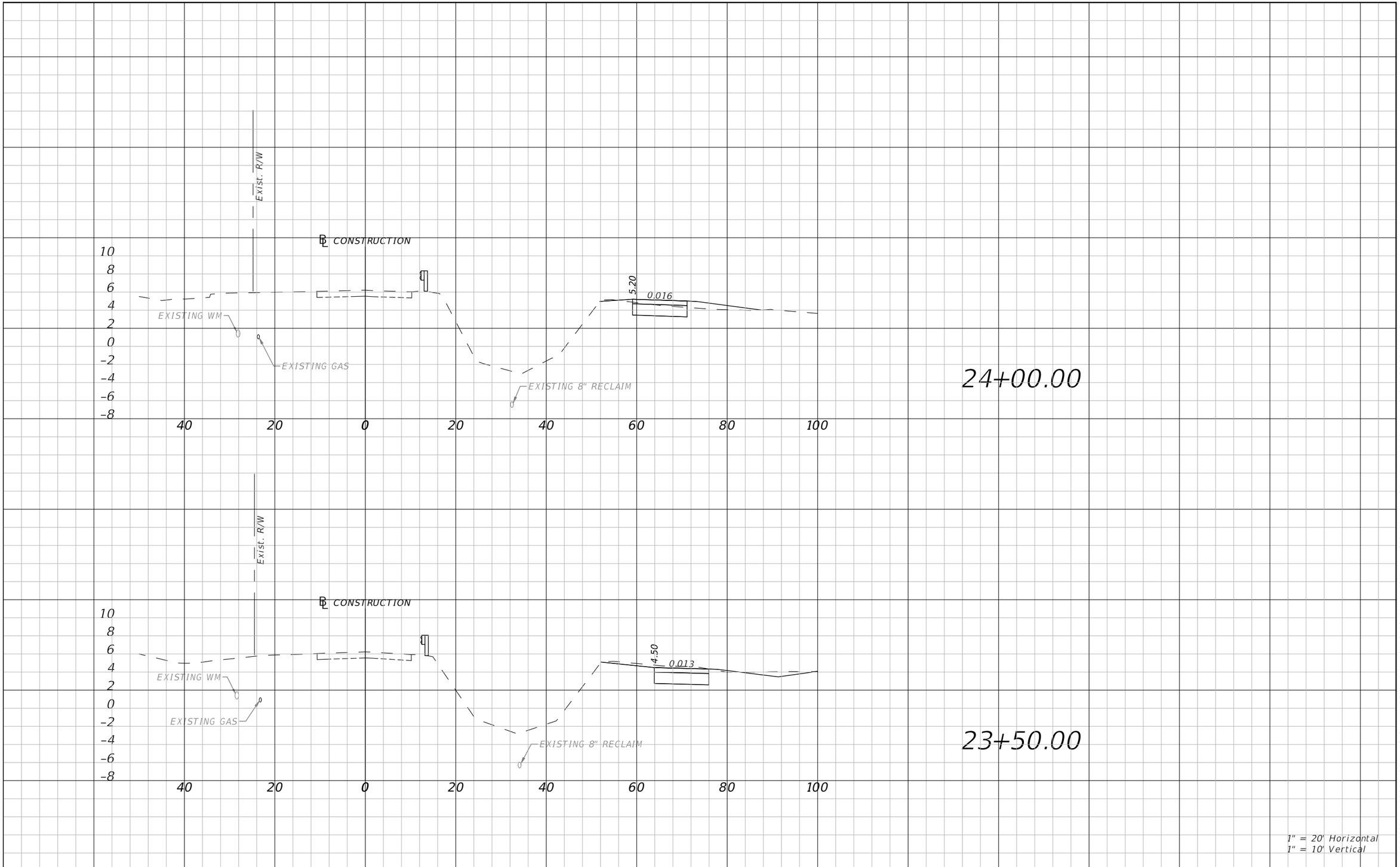

THE OFFICIAL RECORD OF THIS SHEET IS THE ELECTRONIC FILE DIGITALLY SIGNED AND SEALED UNDER RULE 61G15-23.004, F.A.C.

REVISIONS	
DATE	DESCRIPTION

CITY OF PORT ORANGE
1000 CITY CENTER CIRCLE
PORT ORANGE, FL 32129

MERLYNN O. ANDERSON, P.E.
P.E. LICENSE NUMBER 83096

STANLEY CONSULTANTS, INC.
80 SPRING VISTA DRIVE
DEBARY, FL 32713

SJR2C LOOP TRAIL
FROM SOUTH OF SELIN CIR TO HERBERT ST

ROAD	COUNTY	FINANCIAL PROJECT ID
SPRUCE CREEK RD	VOLUSIA	439865-3-54-01

CROSS SECTION

SHEET NO.
29

5/14/2025 12:35:09 PM 5/14/2025 12:35:09 PM Projects\10962 (Port Orange)\TWO 09 - SUNTrail (SJR2C Loop) Spruce Creek Rd\CAD\439865\Roadway\RDXSRD01.dwg

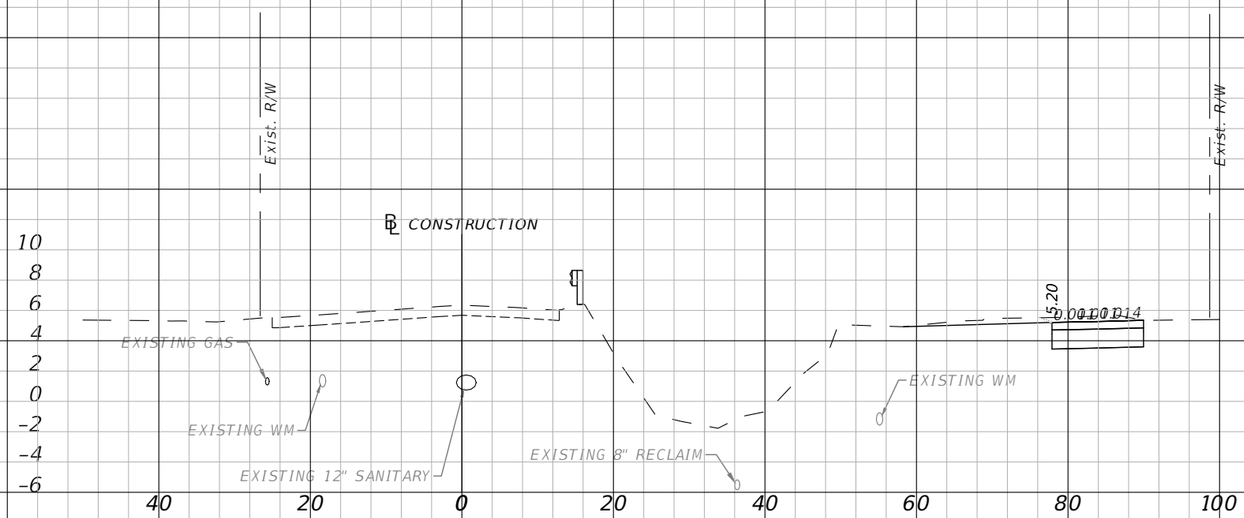

1" = 20' Horizontal
1" = 10' Vertical

THE OFFICIAL RECORD OF THIS SHEET IS THE ELECTRONIC FILE DIGITALLY SIGNED AND SEALED UNDER RULE 61G15-23.004, F.A.C.

REVISIONS	
DATE	DESCRIPTION

CITY OF PORT ORANGE
1000 CITY CENTER CIRCLE
PORT ORANGE, FL 32129

MERLYNN O. ANDERSON, P.E.
P.E. LICENSE NUMBER 83096

STANLEY CONSULTANTS, INC.
80 SPRING VISTA DRIVE
DEBARY, FL 32713

SJR2C LOOP TRAIL
FROM SOUTH OF SELIN CIR TO HERBERT ST

ROAD	COUNTY	FINANCIAL PROJECT ID
SPRUCE CREEK RD	VOLUSIA	439865-3-54-01

CROSS SECTION

SHEET NO.
30

5/14/2025 12:35:14 PM 5/14/2025 12:35:14 PM Projects\10962 (Port Orange)\TWO 09 - SUNTrail (SJR2C Loop) Spruce Creek Rd\CAD\439865\Roadway\RDXSRD01.dwg

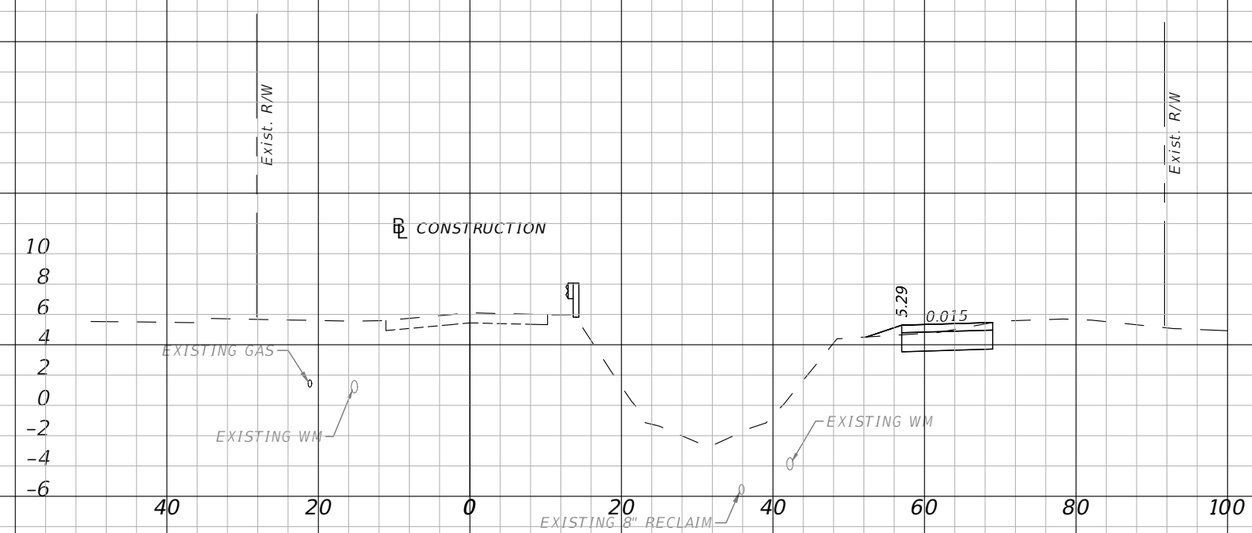

26+00.00

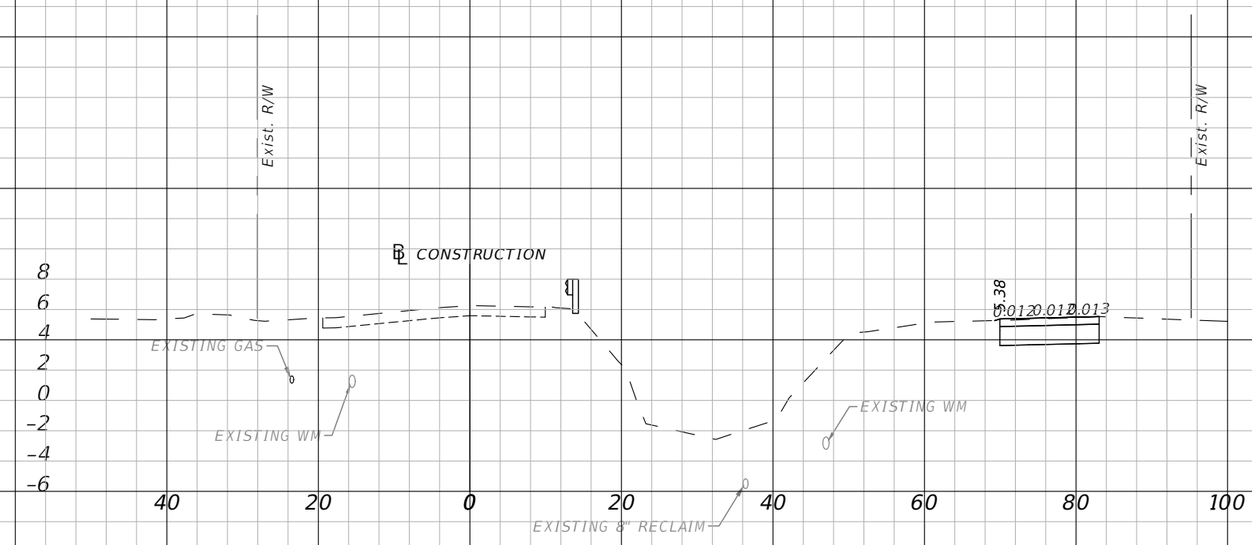

25+50.00

1" = 20' Horizontal
1" = 10' Vertical

THE OFFICIAL RECORD OF THIS SHEET IS THE ELECTRONIC FILE DIGITALLY SIGNED AND SEALED UNDER RULE 61G15-23.004, F.A.C.

REVISIONS	
DATE	DESCRIPTION

CITY OF PORT ORANGE
1000 CITY CENTER CIRCLE
PORT ORANGE, FL 32129

MERLYNN O. ANDERSON, P.E.
P.E. LICENSE NUMBER 83096

STANLEY CONSULTANTS, INC.
80 SPRING VISTA DRIVE
DEBARY, FL 32713

SJR2C LOOP TRAIL
FROM SOUTH OF SELIN CIR TO HERBERT ST

ROAD	COUNTY	FINANCIAL PROJECT ID
SPRUCE CREEK RD	VOLUSIA	439865-3-54-01

CROSS SECTION

SHEET NO.
31

5/14/2025 12:35:19 PM 5/14/2025 12:35:19 PM Projects\10962 (Port Orange)\TWO 09 - SUNTrail (SJR2C Loop) Spruce Creek Rd\CAD\439865\Roadway\RDXSRD01.dwg

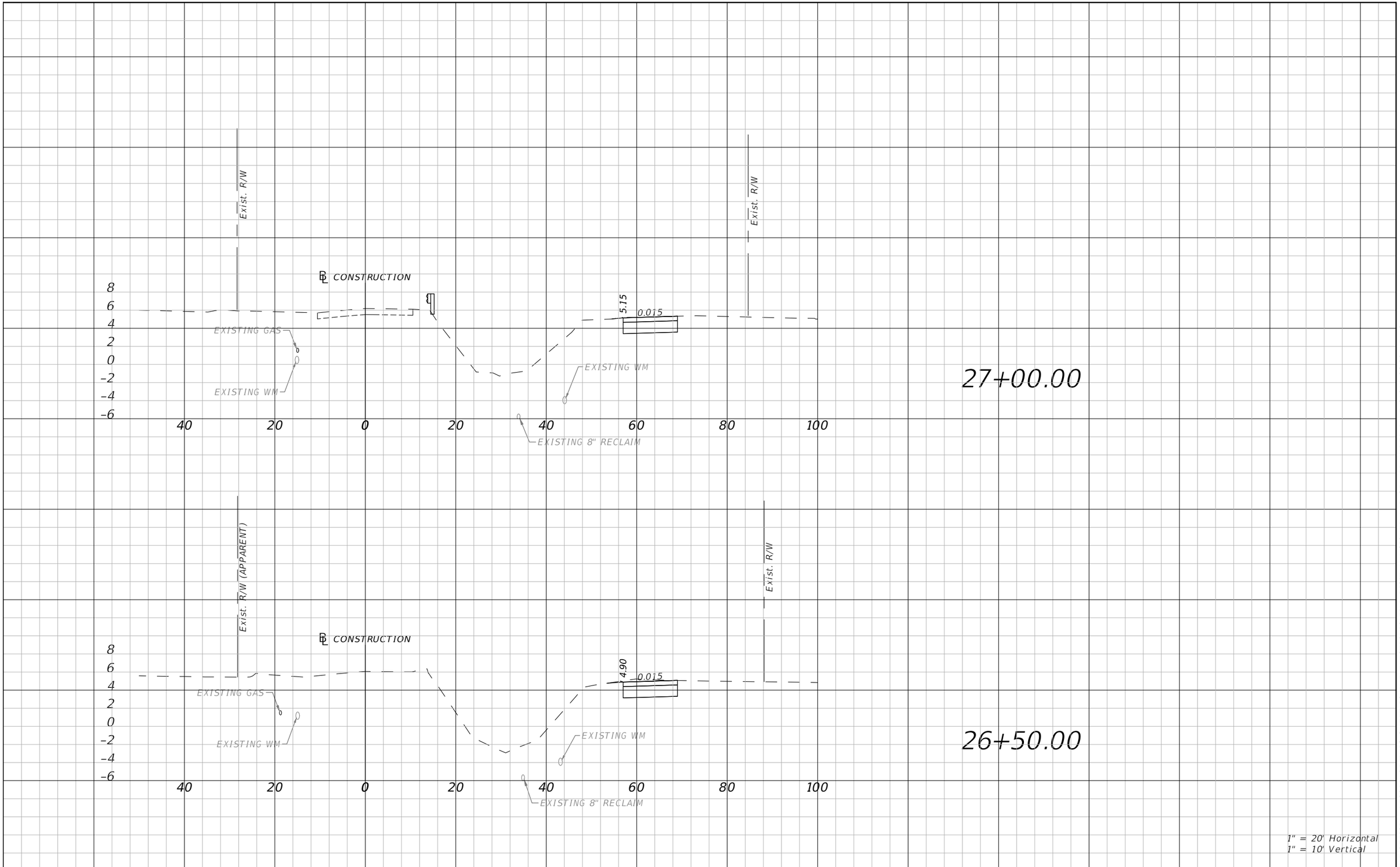

THE OFFICIAL RECORD OF THIS SHEET IS THE ELECTRONIC FILE DIGITALLY SIGNED AND SEALED UNDER RULE 61G15-23.004, F.A.C.

REVISIONS	
DATE	DESCRIPTION

CITY OF PORT ORANGE
1000 CITY CENTER CIRCLE
PORT ORANGE, FL 32129

MERLYNN O. ANDERSON, P.E.
P.E. LICENSE NUMBER 83096

STANLEY CONSULTANTS, INC.
80 SPRING VISTA DRIVE
DEBARY, FL 32713

SJR2C LOOP TRAIL
FROM SOUTH OF SELIN CIR TO HERBERT ST

ROAD	COUNTY	FINANCIAL PROJECT ID
SPRUCE CREEK RD	VOLUSIA	439865-3-54-01

CROSS SECTION

SHEET NO.
32

5/14/2025 12:35:24 PM 5/14/2025 12:35:24 PM Projects\10962 (Port Orange)\TWO 09 - SUNTrail (SJR2C Loop) Spruce Creek Rd\CAD\439865\Roadway\RDXSRD01.dwg

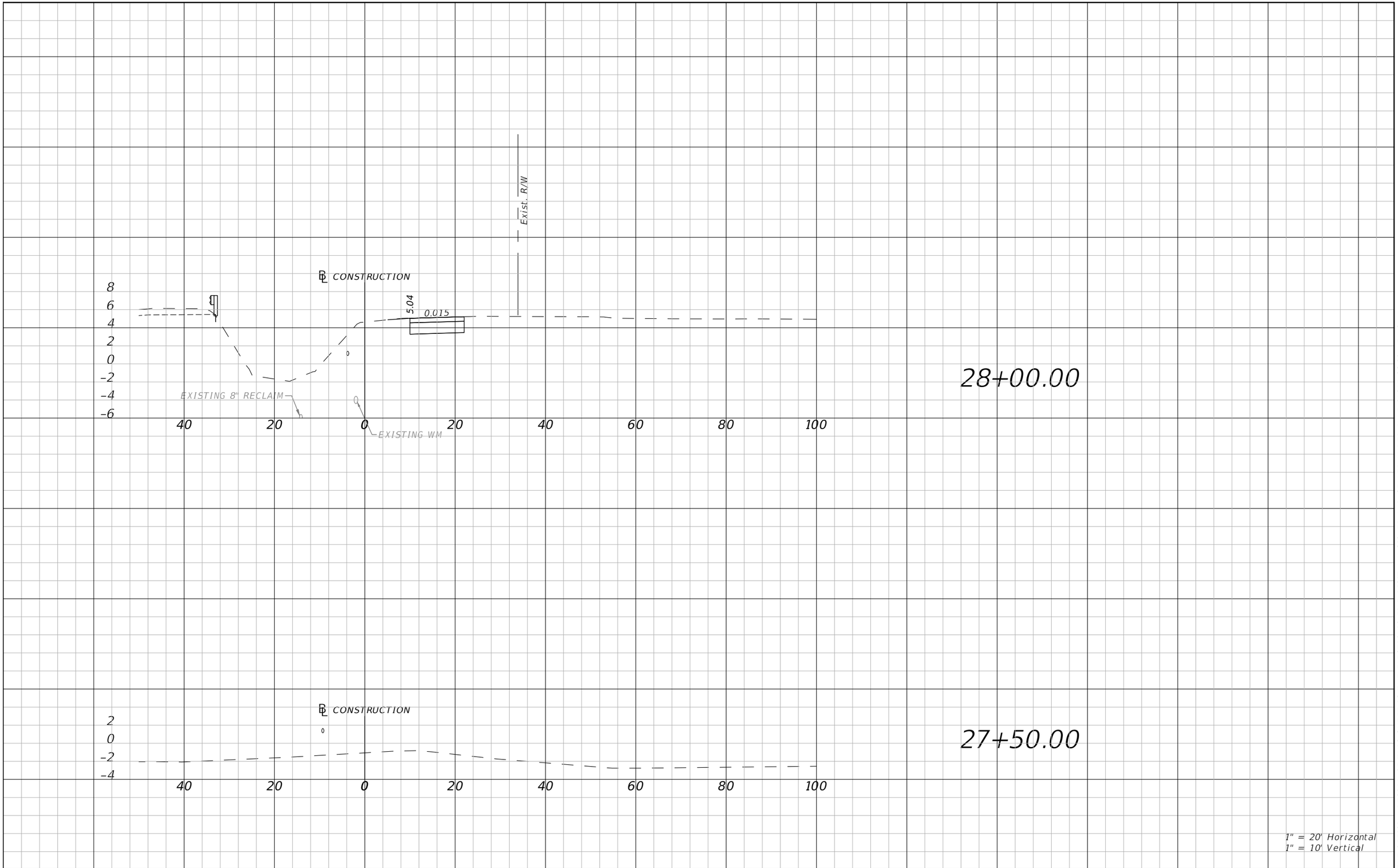

THE OFFICIAL RECORD OF THIS SHEET IS THE ELECTRONIC FILE DIGITALLY SIGNED AND SEALED UNDER RULE 61G15-23.004, F.A.C.

REVISIONS	
DATE	DESCRIPTION

CITY OF PORT ORANGE
1000 CITY CENTER CIRCLE
PORT ORANGE, FL 32129

MERLYNN O. ANDERSON, P.E.
P.E. LICENSE NUMBER 83096

STANLEY CONSULTANTS, INC.
80 SPRING VISTA DRIVE
DEBARY, FL 32713

SJR2C LOOP TRAIL
FROM SOUTH OF SELIN CIR TO HERBERT ST

ROAD	COUNTY	FINANCIAL PROJECT ID
SPRUCE CREEK RD	VOLUSIA	439865-3-54-01

CROSS SECTION

SHEET NO.
33

5/14/2025 12:35:29 PM 5/14/2025 12:35:29 PM Projects\10962 (Port Orange)\TWO 09 - SUNTrail (SJR2C Loop) Spruce Creek Rd\CAD\439865\Roadway\RDXSRD01.dwg

SEE GRAVITY WALL PLAN AND PROFILE SHEETS 18 AND 19 FOR WALL BOTTOM ELEVATIONS.

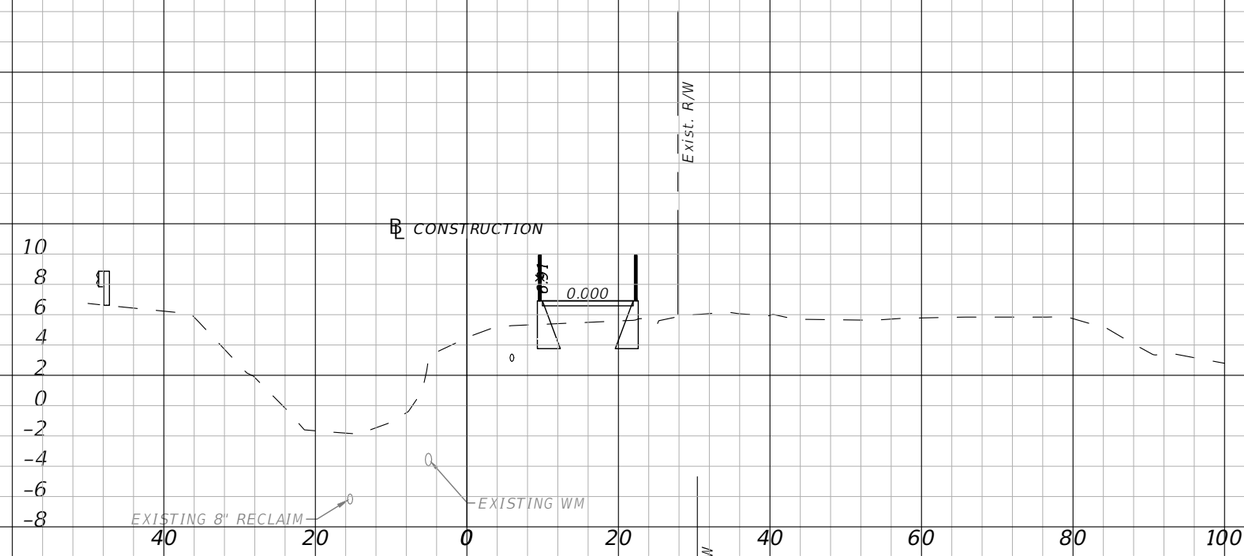

29+00.00

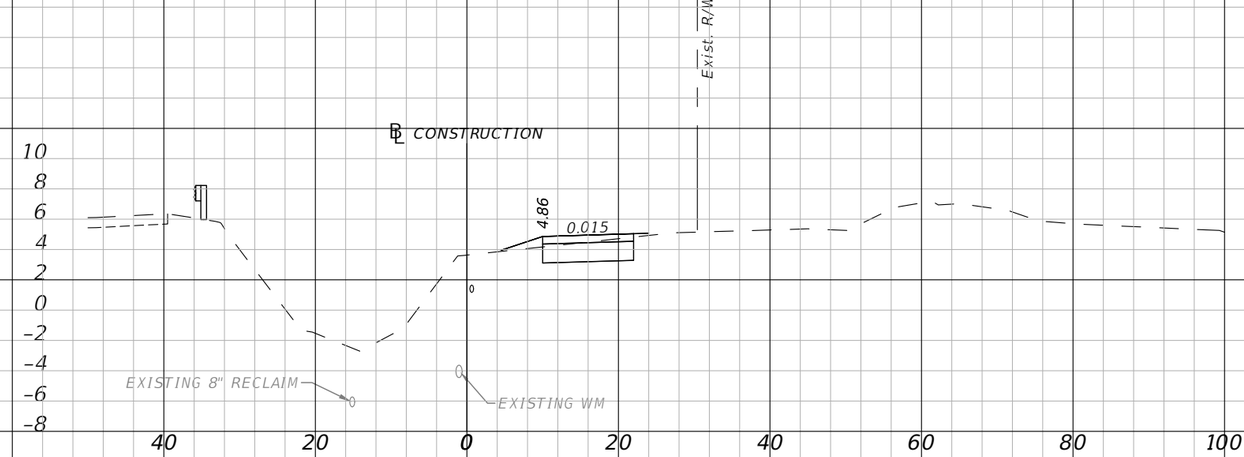

28+50.00

1" = 20' Horizontal
1" = 10' Vertical

THE OFFICIAL RECORD OF THIS SHEET IS THE ELECTRONIC FILE DIGITALLY SIGNED AND SEALED UNDER RULE 61G15-23.004, F.A.C.

REVISIONS	
DATE	DESCRIPTION

CITY OF PORT ORANGE
1000 CITY CENTER CIRCLE
PORT ORANGE, FL 32129

MERLYNN O. ANDERSON, P.E.
P.E. LICENSE NUMBER 83096

STANLEY CONSULTANTS, INC.
80 SPRING VISTA DRIVE
DEBARY, FL 32713

SJR2C LOOP TRAIL
FROM SOUTH OF SELIN CIR TO HERBERT ST

ROAD	COUNTY	FINANCIAL PROJECT ID
SPRUCE CREEK RD	VOLUSIA	439865-3-54-01

CROSS SECTION

SHEET NO.
34

5/14/2025 12:35:35 PM 5/14/2025 12:35:35 PM S:\Projects\10962 (Port Orange)\TWO 09 - SUNTrail (SJR2C Loop) Spruce Creek Rd\CAD\439865\Roadway\RDXSRD01.dwg

SEE GRAVITY WALL PLAN AND PROFILE SHEETS 18 AND 19 FOR WALL BOTTOM ELEVATIONS.

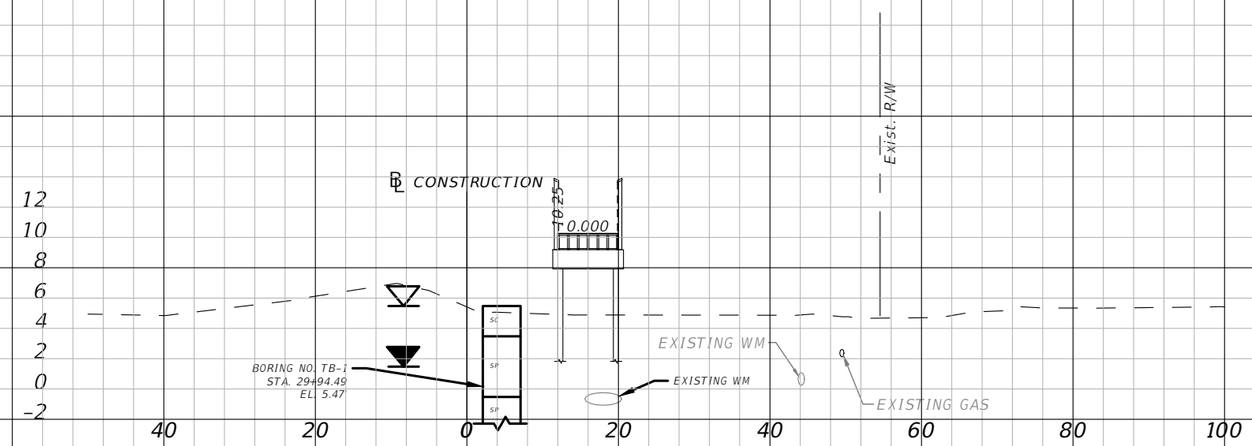

30+00.00

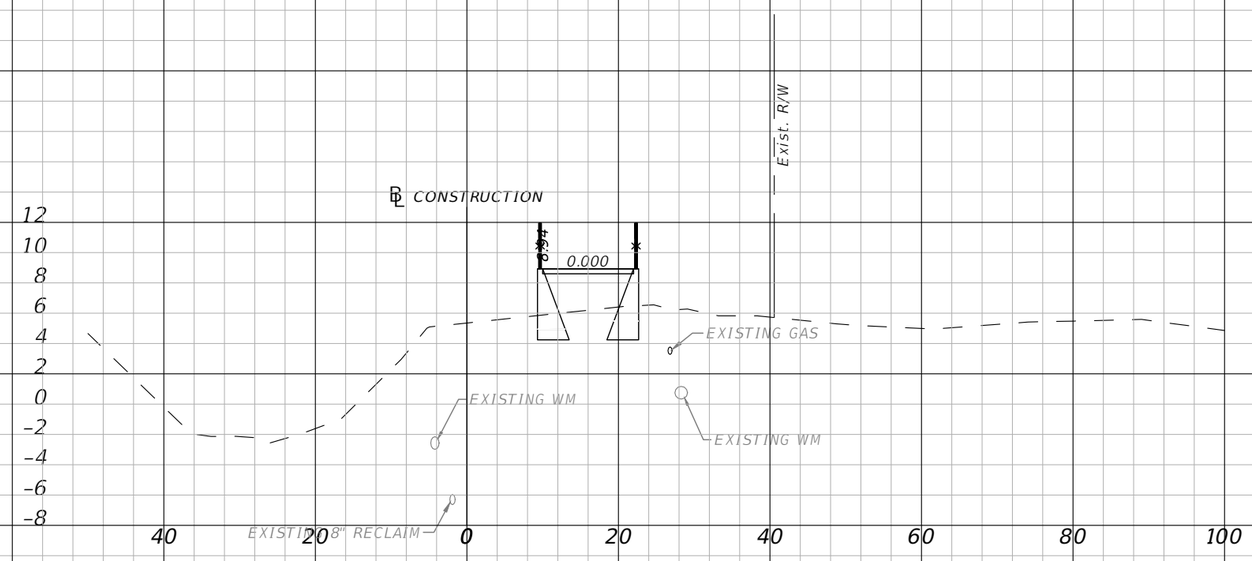

29+50.00

1" = 20' Horizontal
1" = 10' Vertical

THE OFFICIAL RECORD OF THIS SHEET IS THE ELECTRONIC FILE DIGITALLY SIGNED AND SEALED UNDER RULE 61G15-23.004, F.A.C.

REVISIONS	
DATE	DESCRIPTION

CITY OF PORT ORANGE
1000 CITY CENTER CIRCLE
PORT ORANGE, FL 32129

MERLYNN O. ANDERSON, P.E.
P.E. LICENSE NUMBER 83096

STANLEY CONSULTANTS, INC.
80 SPRING VISTA DRIVE
DEBARY, FL 32713

SJR2C LOOP TRAIL
FROM SOUTH OF SELIN CIR TO HERBERT ST

ROAD	COUNTY	FINANCIAL PROJECT ID
SPRUCE CREEK RD	VOLUSIA	439865-3-54-01

CROSS SECTION

SHEET NO. 35

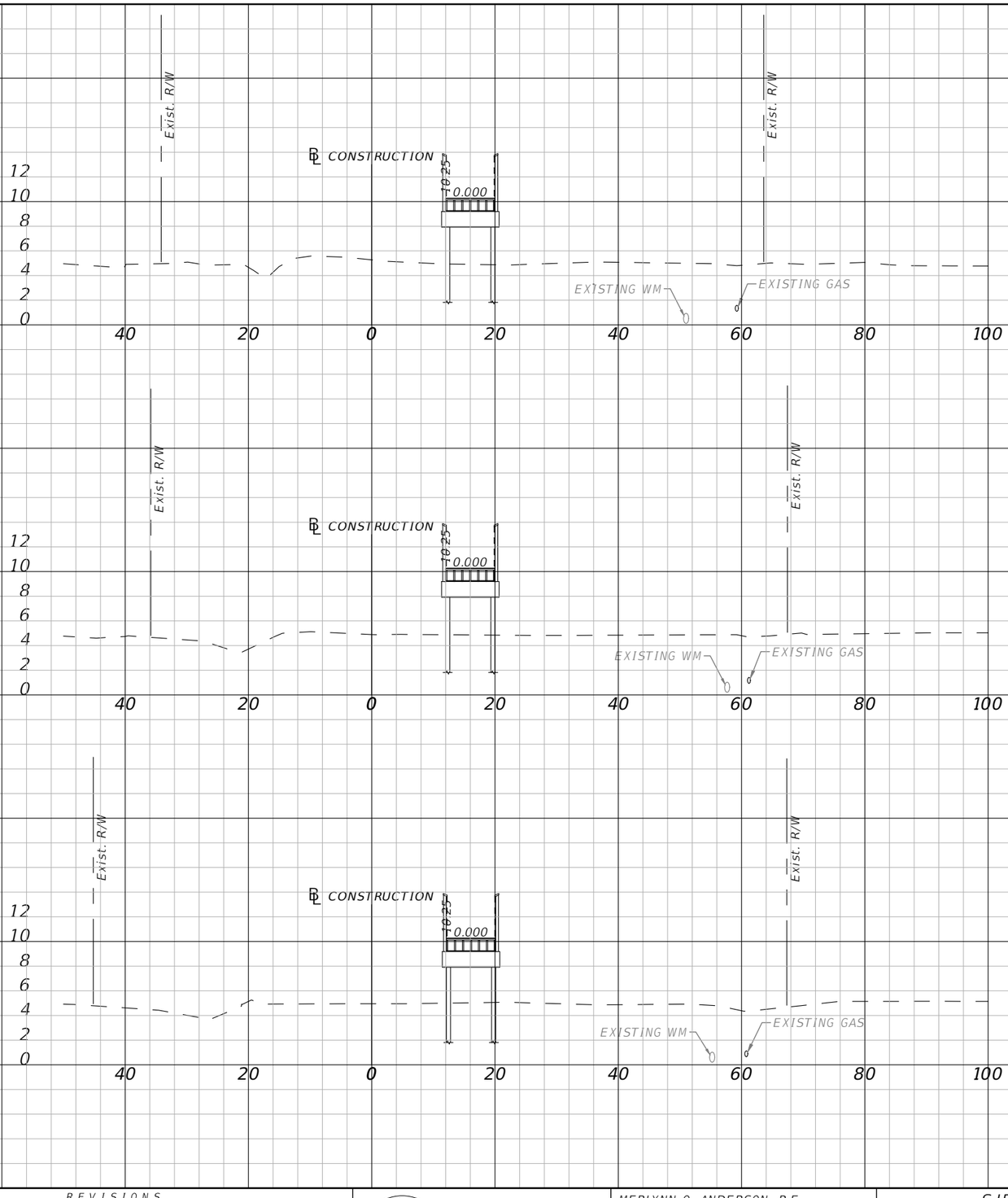

31+50.00

31+00.00

30+50.00

1" = 20' Horizontal
1" = 10' Vertical

THE OFFICIAL RECORD OF THIS SHEET IS THE ELECTRONIC FILE DIGITALLY SIGNED AND SEALED UNDER RULE 61G15-23.004, F.A.C.

REVISIONS	
DATE	DESCRIPTION

CITY OF PORT ORANGE
1000 CITY CENTER CIRCLE
PORT ORANGE, FL 32129

MERLYNN O. ANDERSON, P.E.
P.E. LICENSE NUMBER 83096

STANLEY CONSULTANTS, INC.
80 SPRING VISTA DRIVE
DEBARY, FL 32713

SJR2C LOOP TRAIL
FROM SOUTH OF SELIN CIR TO HERBERT ST

ROAD	COUNTY	FINANCIAL PROJECT ID
SPRUCE CREEK RD	VOLUSIA	439865-3-54-01

CROSS SECTION

SHEET NO. 36

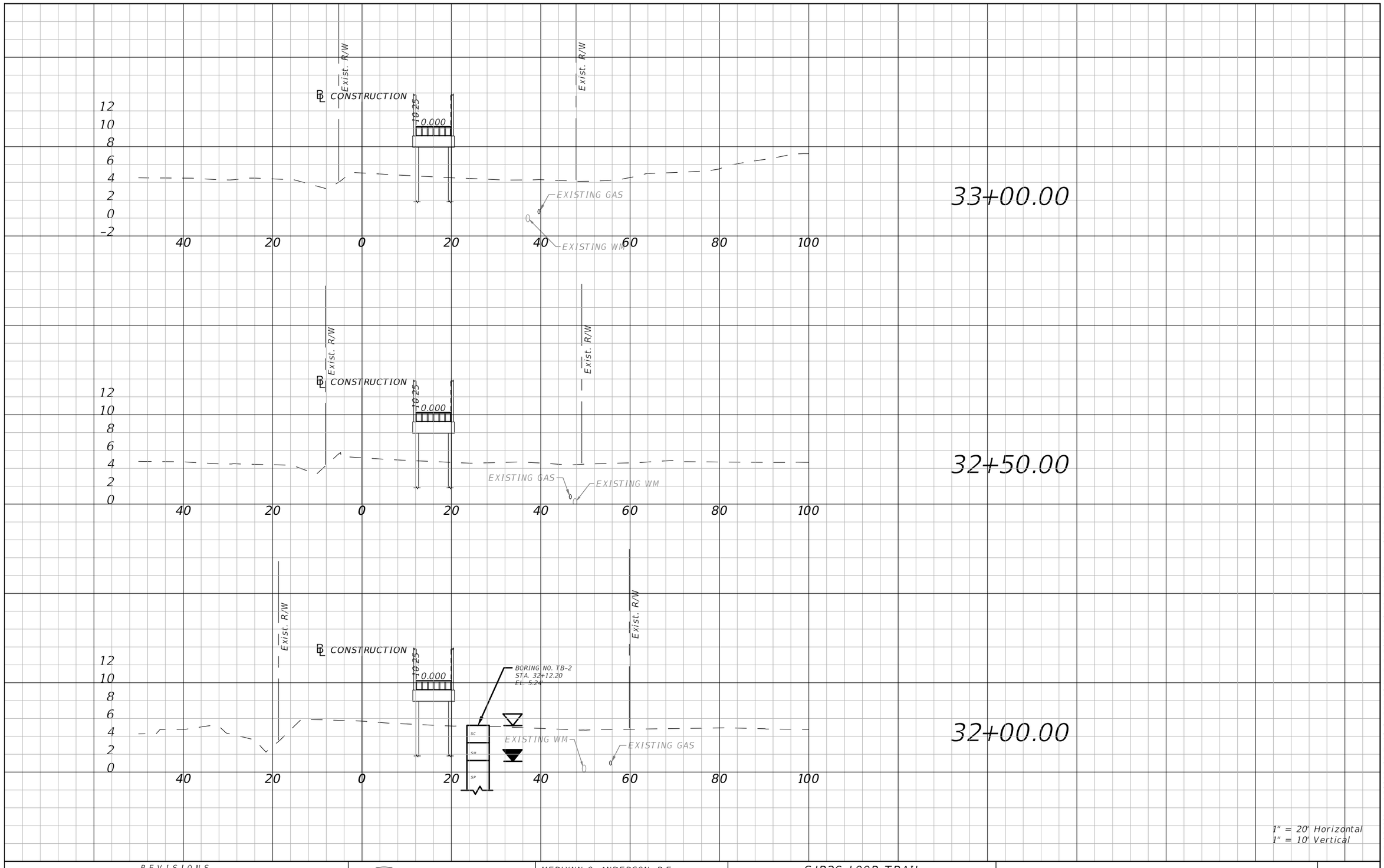

THE OFFICIAL RECORD OF THIS SHEET IS THE ELECTRONIC FILE DIGITALLY SIGNED AND SEALED UNDER RULE 61G15-23.004, F.A.C.

REVISIONS	
DATE	DESCRIPTION

CITY OF PORT ORANGE
1000 CITY CENTER CIRCLE
PORT ORANGE, FL 32129

MERLYNN O. ANDERSON, P.E.
P.E. LICENSE NUMBER 83096

STANLEY CONSULTANTS, INC.
80 SPRING VISTA DRIVE
DEBARY, FL 32713

SJR2C LOOP TRAIL
FROM SOUTH OF SELIN CIR TO HERBERT ST

ROAD	COUNTY	FINANCIAL PROJECT ID
SPRUCE CREEK RD	VOLUSIA	439865-3-54-01

CROSS SECTION

SHEET NO.
37

O'Neill, Karen 5/14/2025 12:35:49 PM 5/14/2025 12:35:49 PM Projects\10962 (Port Orange)\TWO 09 - SUNTrail (SJR2C Loop) Spruce Creek Rd\CAD\439865\Roadway\RDXSRD01.dwg

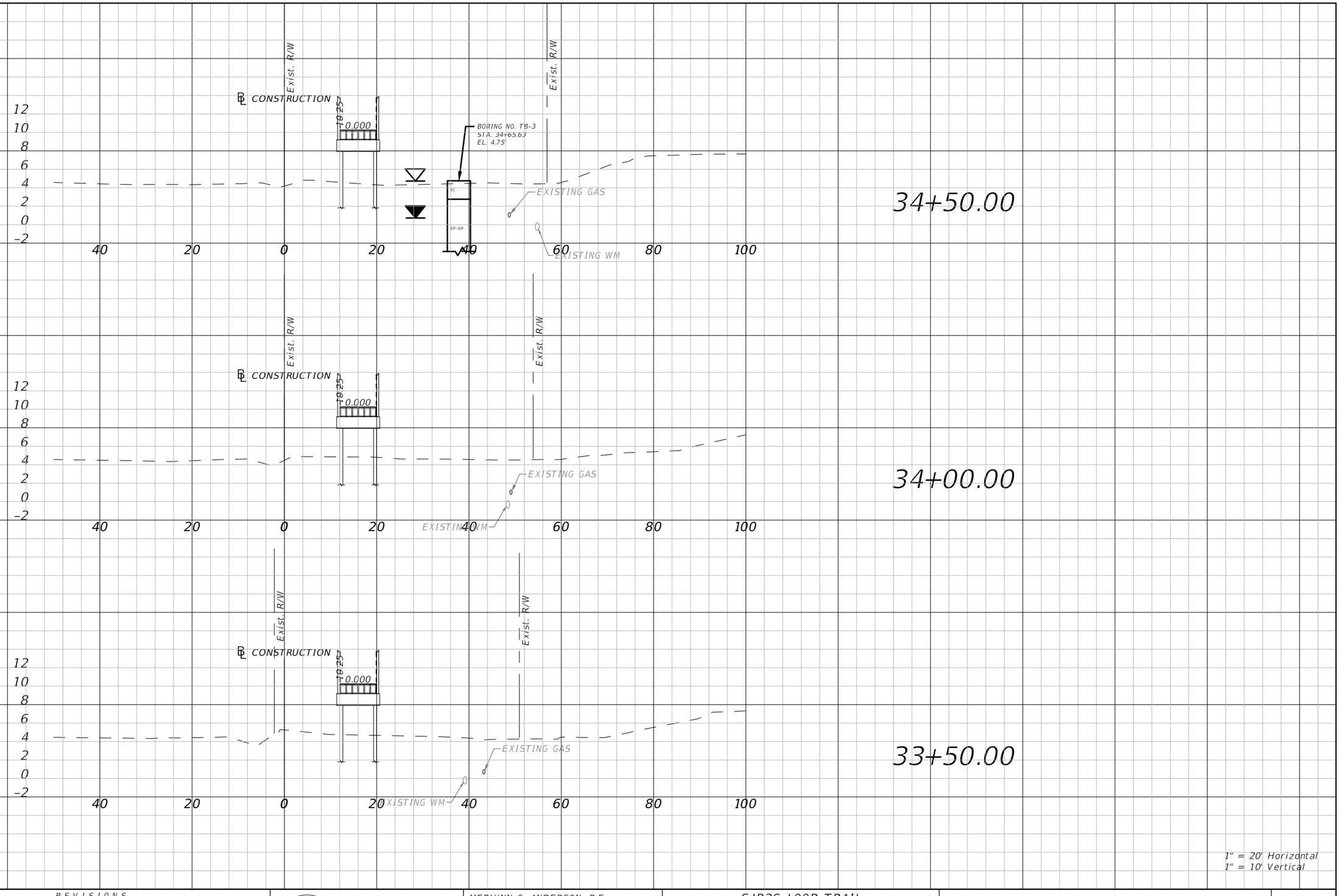

THE OFFICIAL RECORD OF THIS SHEET IS THE ELECTRONIC FILE DIGITALLY SIGNED AND SEALED UNDER RULE 61G15-23.004, F.A.C.

REVISIONS	
DATE	DESCRIPTION

CITY OF PORT ORANGE
1000 CITY CENTER CIRCLE
PORT ORANGE, FL 32129

MERLYNN O. ANDERSON, P.E.
P.E. LICENSE NUMBER 83096

STANLEY CONSULTANTS, INC.
80 SPRING VISTA DRIVE
DEBARY, FL 32713

SJR2C LOOP TRAIL
FROM SOUTH OF SELIN CIR TO HERBERT ST

ROAD	COUNTY	FINANCIAL PROJECT ID
SPRUCE CREEK RD	VOLUSIA	439865-3-54-01

CROSS SECTION

SHEET NO.
38

O'Neill, Karen 5/14/2025 12:35:54 PM 5/14/2025 12:35:54 PM Projects\10962 (Port Orange)\TWO 09 - SUNTrail (SJR2C Loop) Spruce Creek Rd\CAD\439865\Roadway\RDXSRD01.dwg

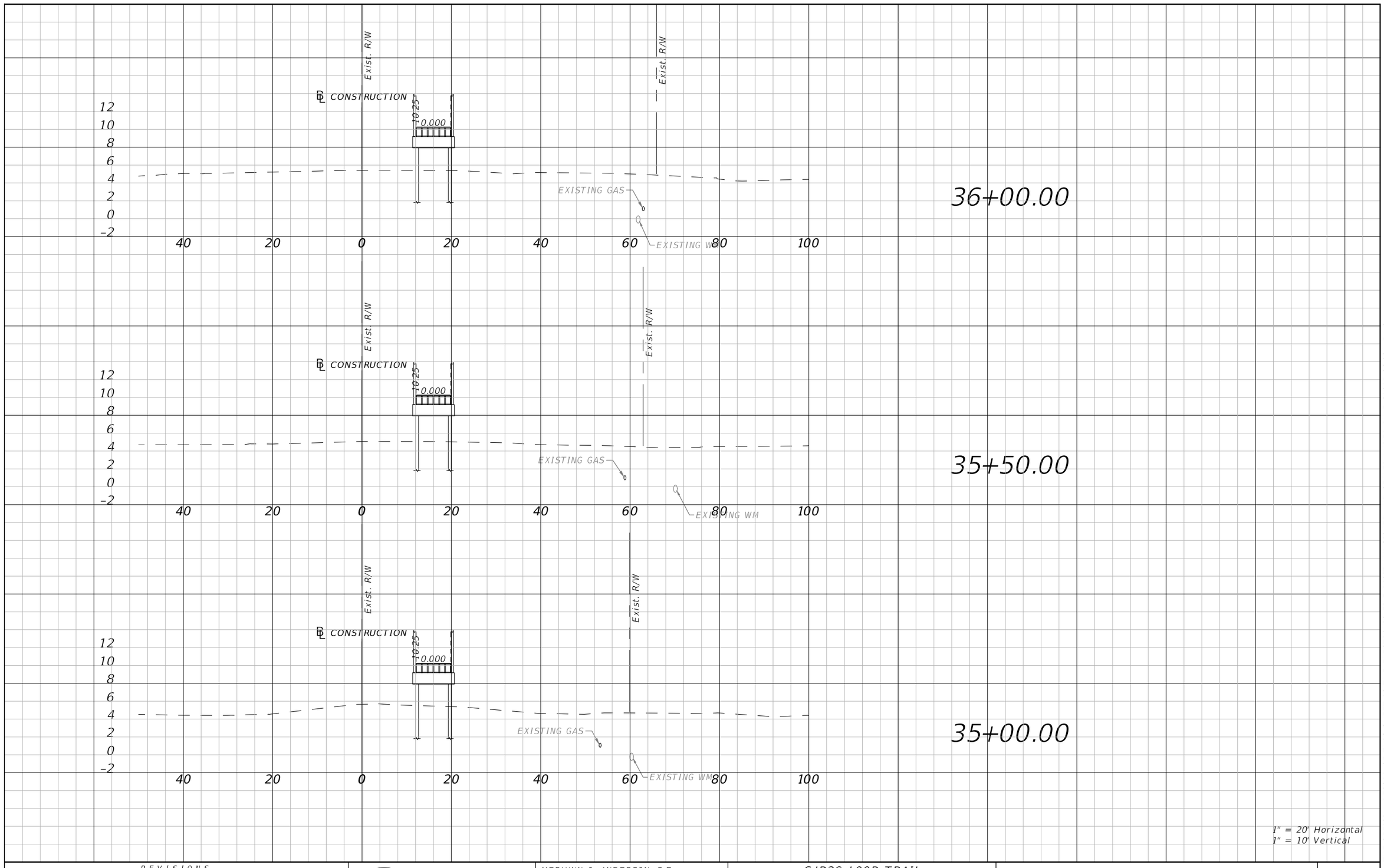

THE OFFICIAL RECORD OF THIS SHEET IS THE ELECTRONIC FILE DIGITALLY SIGNED AND SEALED UNDER RULE 61G15-23.004, F.A.C.

REVISIONS	
DATE	DESCRIPTION

CITY OF PORT ORANGE
1000 CITY CENTER CIRCLE
PORT ORANGE, FL 32129

MERLYNN O. ANDERSON, P.E.
P.E. LICENSE NUMBER 83096

STANLEY CONSULTANTS, INC.
80 SPRING VISTA DRIVE
DEBARY, FL 32713

SJR2C LOOP TRAIL
FROM SOUTH OF SELIN CIR TO HERBERT ST

ROAD	COUNTY	FINANCIAL PROJECT ID
SPRUCE CREEK RD	VOLUSIA	439865-3-54-01

CROSS SECTION

SHEET NO.
39

5/14/2025 12:36:00 PM 5/14/2025 12:36:00 PM Projects\10962 (Port Orange)\TWO 09 - SUNTrail (SJR2C Loop) Spruce Creek Rd\CAD\439865\Roadway\RDXSRD01.dwg

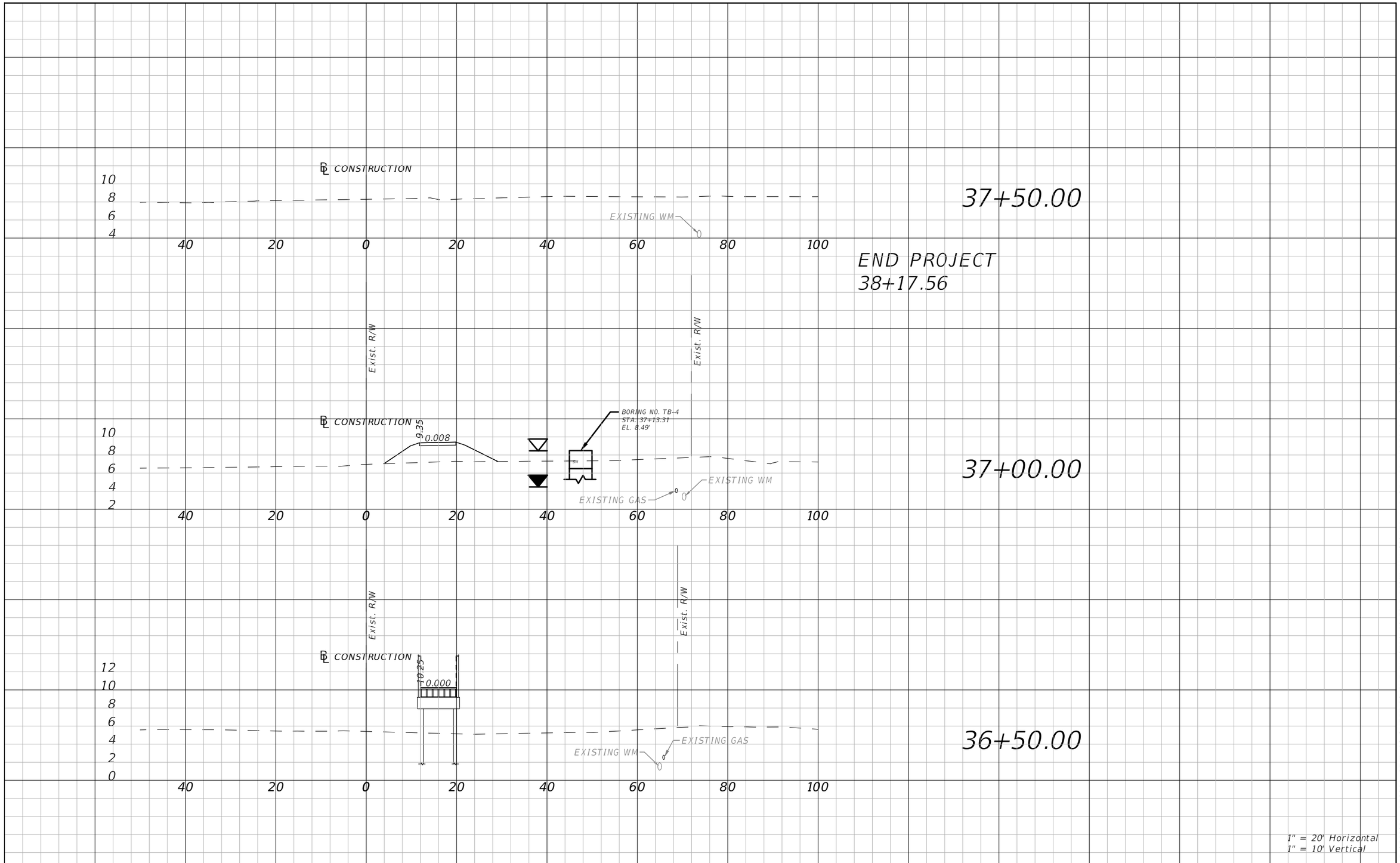

THE OFFICIAL RECORD OF THIS SHEET IS THE ELECTRONIC FILE DIGITALLY SIGNED AND SEALED UNDER RULE 61G15-23.004, F.A.C.

REVISIONS	
DATE	DESCRIPTION

CITY OF PORT ORANGE
1000 CITY CENTER CIRCLE
PORT ORANGE, FL 32129

MERLYNN O. ANDERSON, P.E.
P.E. LICENSE NUMBER 83096

STANLEY CONSULTANTS, INC.
80 SPRING VISTA DRIVE
DEBARY, FL 32713

SJR2C LOOP TRAIL
FROM SOUTH OF SELIN CIR TO HERBERT ST

ROAD	COUNTY	FINANCIAL PROJECT ID
SPRUCE CREEK RD	VOLUSIA	439865-3-54-01

CROSS SECTION

SHEET NO.
40

O'Neill, Karen 5/14/2025 12:36:05 PM 5/14/2025 12:36:05 PM 6:03:06 Projects\10962 (Port Orange)\TWO 09 - SUNTrail (SJR2C Loop) Spruce Creek Rd\CAD\439865\Roadway\RDXSRD01.dwg

1.0 SITE DESCRIPTION:

PROJECT NAME AND LOCATION:

SJR2C LOOP TRAIL (SPRUCE CREEK RD.)
FROM SOUTH OF SELIN CIR TO HERBERT ST

*SEE COVER SHEET FOR LOCATION MAP

PROJECT OWNER AND ADDRESS:

CITY OF PORT ORANGE
1000 CITY CENTER CIRCLE,
PORT ORANGE, FL 32129

1.A. NATURE OF CONSTRUCTION ACTIVITY:

THE PROJECT CONSISTS OF CONSTRUCTING 0.65 MILES OF SHARED USE PATHS, 687 FEET OF BOARDWALK, AND UPGRADES TO EXISTING CURB RAMPS WITH LIMITED DISTURBANCE OF SURROUNDING AREA.

1.B. SEQUENCE OF MAJOR SOIL DISTURBING ACTIVITIES:

FOR EACH CONSTRUCTION PHASE, INSTALL PERIMETER CONTROLS AFTER CLEARING AND GRUBBING AS NECESSARY FOR INSTALLATION OF CONTROLS, BUT BEFORE BEGINNING OTHER WORK FOR THE CONSTRUCTION PHASE. REMOVE PERIMETER CONTROLS ONLY AFTER ALL UPSTREAM AREAS ARE STABILIZED.

1. CLEARING AND GRUBBING
2. EARTHWORK ASSOCIATED WITH THE CONSTRUCTION OF SHARED USE PATHS

1.C. AREA ESTIMATES:

TOTAL AREA TO BE DISTURBED: 1.158 ACRES

1.D. RUNOFF DATA:

SOILS DATA:

THE TYPES OF SOILS ENCOUNTERED ARE CLASSIFIED ACCORDING TO THE NATIONAL RESOURCE CONSERVATION SERVICE SOILS SURVEY FOR VOLUSIA COUNTY AND ARE LISTED IN THE FOLLOWING TABLE:

SOIL NO.	SOIL NAME	HYDROLOGIC GROUP
14	CHOBEE FINE SANDY LOAM	B/D
29	IMMOKALEE SAND,	B/D
60	SMYRNA-SMYRNA, WET FINE SAND, 0 TO 2 PERCENT SLOPES	A/D

OUTFALL INFORMATION:

CONTROL STRUCTURE: (NA)

1.E. SITE MAP:

THE CONSTRUCTION PLANS ARE BEING USED AS THE SITE MAPS.

1.F. RECEIVING WATERS:

HALIFAX RIVER (WBID# 2363A)

2.0 CONTROLS:

1.A. EROSION AND SEDIMENT CONTROLS:

BEST MANAGEMENT PRACTICES (BMPs) AND MEASURES SHALL BE IMPLEMENTED AT THE CONSTRUCTION SITE FOR ALL MAJOR SOIL DISTURBING ACTIVITIES TO CONTROL EROSION AND TURBIDITY CAUSED BY STORMWATER RUNOFF. THE CONTRACTOR IS RESPONSIBLE FOR PLACING AND MAINTAINING THESE CONTROL METHODS AS SHOWN AND AS REQUIRED. AS WORK PROGRESSES, THE CONTRACTOR SHALL MODIFY THE PLAN TO ADAPT TO SEASONAL VARIATIONS, CHANGES IN CONSTRUCTION ACTIVITIES, AND THE NEED FOR BETTER PRACTICES. THE CONTRACTOR SHALL ALSO PROVIDE EROSION PROTECTION AS REQUIRED BY LOCAL, STATE AND FEDERAL LAW.

2.A.1 STABILIZATION PRACTICES:

THE CONTRACTOR SHALL INITIATE ALL STABILIZATION MEASURES AS SOON AS PRACTICAL, BUT IN NO CASE MORE THAN 7 DAYS AFTER CONSTRUCTION ACTIVITIES HAVE TEMPORARILY OR PERMANENTLY CEASED. THE STABILIZATION PRACTICES SHALL INCLUDE AT LEAST THE FOLLOWING, UNLESS OTHERWISE APPROVED BY THE ENGINEER:

TEMPORARY STABILIZATION:
* ARTIFICIAL COVERINGS IN ACCORDANCE WITH SPECIFICATION SECTION 104.
* TURF AND SOD IN ACCORDANCE WITH SPECIFICATION SECTION 104.

PERMANENT STABILIZATION:
* ASPHALT OR CONCRETE SURFACE.
* SOD IN ACCORDANCE WITH SPECIFICATION SECTION 570.

2.A.2 STRUCTURAL PRACTICES:

SEDIMENT CONTROLS SHALL BE IN PLACE BEFORE DISTURBING SOIL UPSTREAM OF THE CONTROL. THE STRUCTURAL PRACTICES SHALL INCLUDE AT LEAST THE FOLLOWING, UNLESS OTHERWISE APPROVED BY THE ENGINEER:

TEMPORARY:
* SEDIMENT BARRIERS IN ACCORDANCE WITH THE CONSTRUCTION DETAILS AND SPECIFICATION SECTION 104, AND FDEP EROSION AND SEDIMENT CONTROL DESIGNER AND REVIEWER MANUAL.
* INLET PROTECTION IN ACCORDANCE WITH FDEP EROSION AND SEDIMENT CONTROL DESIGNER AND REVIEWER MANUAL. INLET PROTECTION DEVICES SHALL BE INSTALLED ON ALL PROPOSED STORM INLETS, AND INSTALLED ON ANY EXISTING STORM INLETS THAT MAY BE IMPACTED WITH SEDIMENT LADEN RUNOFF ORIGINATING FROM THE PROJECT AREA.

PERMANENT:
* STORMATER PONDS.
* SOD.

2.B STORMWATER MANAGEMENT:

UNDER PRESENT CONDITIONS, STORMWATER RUNOFF WITHIN THE MAJORITY OF THE PROJECT CORRIDOR SHEET FLOWS OVERLAND INTO THE HALIFAX CANAL ALONG SPRUCE CREEK ROAD THAT ULTIMATELY DISCHARGES TO THE HALIFAX RIVER. EXISTING DRAINAGE PATTERS ARE MAINTAINED IN PROPOSED CONDITIONS.

2.C. OTHER CONTROLS:

2.C.1 WASTE DISPOSAL:

THE CONTRACTOR SHALL PREVENT THE DISCHARGE OF SOLID MATERIALS, INCLUDING BUILDING MATERIALS, TO THE WATERS OF THE UNITED STATES. THE PROPOSED METHODS SHALL INCLUDE AT LEAST THE FOLLOWING, UNLESS OTHERWISE APPROVED BY THE ENGINEER:

* PROVIDING LITTER CONTROL AND COLLECTION WITHIN THE PROJECT AREA DURING CONSTRUCTION ACTIVITIES.
* DISPOSING OF ALL FERTILIZER OR OTHER CHEMICAL CONTAINERS ACCORDING TO EPA STANDARD PRACTICES AS DETAILED BY THE MANUFACTURER.
* DISPOSING OF SOLID MATERIALS, INCLUDING BUILDING AND CONSTRUCTION MATERIALS, OFF THE PROJECT SITE BUT NOT IN SURFACE WATERS OR WETLANDS, AND IN ACCORDANCE WITH ALL LOCAL AND STATE LAWS. NO WASTE MATERIALS SHALL BE BURIED ON SITE.

2.C.2 OFF-SITE VEHICLE TRACKING & DUST CONTROL:

THE CONTRACTOR SHALL MINIMIZE OFF-SITE VEHICLE TRACKING OF SEDIMENTS AND GENERATING DUST. THE PROPOSED METHODS SHALL INCLUDE AT LEAST THE FOLLOWING, UNLESS OTHERWISE APPROVED BY THE ENGINEER:

* COVERING LOADED HAUL TRUCKS WITH TARPAULINS.
* REMOVING EXCESS DIRE FROM ROADS DAILY.
* STABILIZING CONSTRUCTION ENTRANCES ACCORDING TO THE FDEP EROSION AND SEDIMENT CONTROL DESIGNER AND REVIEWER MANUAL.
* USING ROADWAY SWEEPERS DURING DUST GENERATING ACTIVITIES SUCH AS EXCAVATION AND MILLING OPERATIONS.

2.C.3 STATE AND LOCAL REGULATIONS FOR WASTE DISPOSAL, SANITARY SEWER, OR SEPTIC TANK REGULATIONS:

THE CONTRACTOR SHALL UTILIZE PROCEDURES THAT COMPLY WITH APPLICABLE STATE AND LOCAL REGULATIONS FOR WASTE DISPOSAL, AND SANITARY SEWER OR SEPTIC SYSTEMS AS DESCRIBED IN SPECIFICATION SECTION 104, EROSION CONTROL PLAN.

THE CONTRACTOR SHALL IMPLEMENT SITE SPECIFIC CONTROL MEASURES OR BMPs TO MINIMIZE OR ELIMINATE POLLUTANT DISCHARGES RESULTING FROM DEWATERING OPERATION. THE CONTROL MEASURES OR BMPs MAY INCLUDE THE FOLLOWING, UNLESS OTHERWISE APPROVED BY THE ENGINEER:

* SEDIMENT TRAPS AND BASINS
* DEWATERING TANKS AND FILTERS

2.C.4 FERTILIZERS AND PESTICIDES:

THE CONTRACTOR SHALL APPLY FERTILIZERS AND PESTICIDES IN COMPLIANCE WITH THE PROCEDURES DESCRIBED IN THE APPLICABLE SUBSECTIONS OF SECTION 982 OF THE SPECIFICATIONS.

2.C.5 TOXIC SUBSTANCES:

THE CONTRACTOR SHALL MAINTAIN A LIST OF TOXIC SUBSTANCES THAT ARE LIKELY TO BE USED ON THE JOB AND PROVIDE A PLAN ADDRESSING THE GENERATION, APPLICATION, MIGRATION, STORAGE, AND DISPOSAL OF THESE SUBSTANCES.

3.0 MAINTENANCE:

THE CONTRACTOR SHALL PROVIDE A PLAN FOR MAINTAINING ALL EROSION AND SEDIMENT CONTROLS THROUGHOUT CONSTRUCTION. THE MAINTENANCE PLAN SHALL AT A MINIMUM COMPLY WITH THE FOLLOWING:

* SILT FENCE: MAINTAIN PER SPECIFICATION SECTION 104. THE CONTRACTOR SHOULD ANTICIPATE REPLACING SILT FENCE ON 12 MONTH INTERVALS.
* INLET PROTECTION: REMOVE SEDIMENT PER MANUFACTURER'S RECOMMENDATIONS OR WHEN WATER PONDS IN UNACCEPTABLE AMOUNTS OR AREAS.

4.0 INSPECTIONS:

QUALIFIED PERSONNEL SHALL INSPECT THE FOLLOWING ITEMS AT LEAST ONCE EVERY SEVEN CALENDAR DAYS AND WITHIN 24 HOURS OF THE END OF A STORM THAT IS 0.50 INCHES OR GREATER.

TO COMPLY, THE CONTRACTOR SHALL INSTALL AND MAINTAIN RAIN GAUGES AND RECORD THE DAILY RAINFALL. WHERE SITES HAVE BEEN PERMANENTLY STABILIZED, INSPECTIONS SHALL BE CONDUCTED AT LEAST ONCE EVERY MONTH. THE CONTRACTOR SHALL ALSO INSPECT THAT CONTROLS INSTALLED IN THE FIELD AGREE WITH THE LATEST STORMWATER POLLUTION PREVENTION PLAN.

* POINTS OF DISCHARGE TO WATERS OF THE UNITS STATES.
* POINTS OF DISCHARGE TO MUNICIPAL SEPARATE STORM DRAIN SYSTEMS.
* DISTURBED AREAS OF THE SITE THAT HAVE NOT BEEN FINALLY STABILIZED.
* AREAS USED FOR STORAGE OF MATERIALS THAT ARE EXPOSED TO PRECIPITATION.
* STRUCTURAL CONTROLS
* STORMWATER MANAGEMENT SYSTEMS
* LOCATIONS WHERE VEHICLES ENTER OR EXIT THE SITE

THE CONTRACTOR SHALL INITIATE REPAIRS WITHIN 24 HOURS OF INSPECTIONS THAT INDICATE ITEMS ARE NOT IN GOOD WORKING ORDER.

IF INSPECTION INDICATE THAT INSTALLED STABILIZATION AND STRUCTURAL PRACTICES ARE NOT SUFFICIENT TO MINIMIZE EROSION, RETAIN SEDIMENT, AND PREVENT DISCHARGING POLLUTANTS, THE CONTRACTOR SHALL PROVIDE ADDITIONAL MEASURES, AS APPROVED BY THE ENGINEER.

5.0 NON-STORMWATER DISCHARGES:

THE CONTRACTOR SHALL IDENTIFY ALL ANTICIPATED POTENTIAL NON-STORMWATER DISCHARGES. THE CONTRACTOR SHALL DESCRIBE THE PROPOSED MEASURES TO PREVENT POLLUTION OF THESE NON-STORMWATER DISCHARGES. IF THE CONTRACTOR ENCOUNTERS CONTAMINATED SOIL OR GROUNDWATER, CONTACT THE VOLUSIA COUNTY HAZARDOUS WASTE COORDINATOR,

ALLOWABLE NON-STORMWATER DISCHARGES INCLUDE THE FOLLOWING:

* DISCHARGES FROM FIREFIGHTING ACTIVITIES.
* FIRE HYDRANT FLUSHINGS.
* WATERS WITHOUT DETERGENTS USED TO SPRAY OFF LOOSE SOLIDS FROM VEHICLES.
* WATERS USED TO CONTROL DUST.
* POTABLE WATER SOURCES SUCH AS WATERLINE FLUSHINGS.
* LANDSCAPE IRRIGATION WATER AND DRAINAGE.
* ROUTINE EXTERNAL BUILDING WASHDOWN.
* PAVEMENT WASHWATERS THAT DO NOT CONTAIN DETERGENTS, LEAKS, SPILLS OF TOXIC OR HAZARDOUS MATERIALS.
* AIR CONDITIONING CONDENSATE.
* SPRING WATER.
* FOUNDATION OR FOOTING DRAIN FLOWS.
* NON-CONTAMINATED GROUND WATER ASSOCIATED WITH DEWATERING ACTIVITIES.

PROHIBITED NON-STORMWATER DISCHARGES INCLUDE, BUT ARE NOT LIMITED TO, THE FOLLOWING:

* WASTEWATER FROM CONCRETE WASHOUT
* WASTEWATER FROM WASHOUT OR CLEANOUT OF STUCCO, PAINT, FROM RELEASE OF OILS, CURING COMPOUNDS, AND OTHER CONSTRUCTION MATERIALS.
* FUELS, OILS, OR OTHER POLLUTANTS FROM VEHICLE AND EQUIPMENT OPERATION AND MAINTENANCE.
* SOAPS, DETERGENTS, SOLVENTS, OR OTHER CLEANERS.
* HAZARDOUS SUBSTANCES OR OIL RESULTING FROM AN ON-SITE SPILL.
* SOLID MATERIALS, INCLUDING BUILDING MATERIALS

CONTRACTOR'S AND SUBCONTRACTOR'S CERTIFICATION

I CERTIFY UNDER PENALTY OF LAW THAT I UNDERSTAND, AND SHALL COMPLY WITH, THE TERMS AND CONDITIONS OF THE STATE OF FLORIDA GENERIC PERMIT FOR STORMWATER DISCHARGE FROM LARGE AND SMALL CONSTRUCTION ACTIVITIES AND THIS STORMWATER POLLUTION PREVENTION PLAN.

THE OFFICIAL RECORD OF THIS SHEET IS THE ELECTRONIC FILE DIGITALLY SIGNED AND SEALED UNDER RULE 61G15-23.004, F.A.C.

REVISIONS	
DATE	DESCRIPTION

CITY OF PORT ORANGE
1000 CITY CENTER CIRCLE
PORT ORANGE, FL 32129

MERLYNN O. ANDERSON, P.E.
P.E. LICENSE NUMBER 83096

STANLEY CONSULTANTS, INC.
80 SPRING VISTA DRIVE
DEBARY, FL 32713

SJR2C LOOP TRAIL
FROM SOUTH OF SELIN CIR TO HERBERT ST

ROAD	COUNTY	FINANCIAL PROJECT ID
SPRUCE CREEK RD	VOLUSIA	439865-3-54-01

STORMWATER POLLUTION PREVENTION PLAN NOTES

SHEET NO. 41

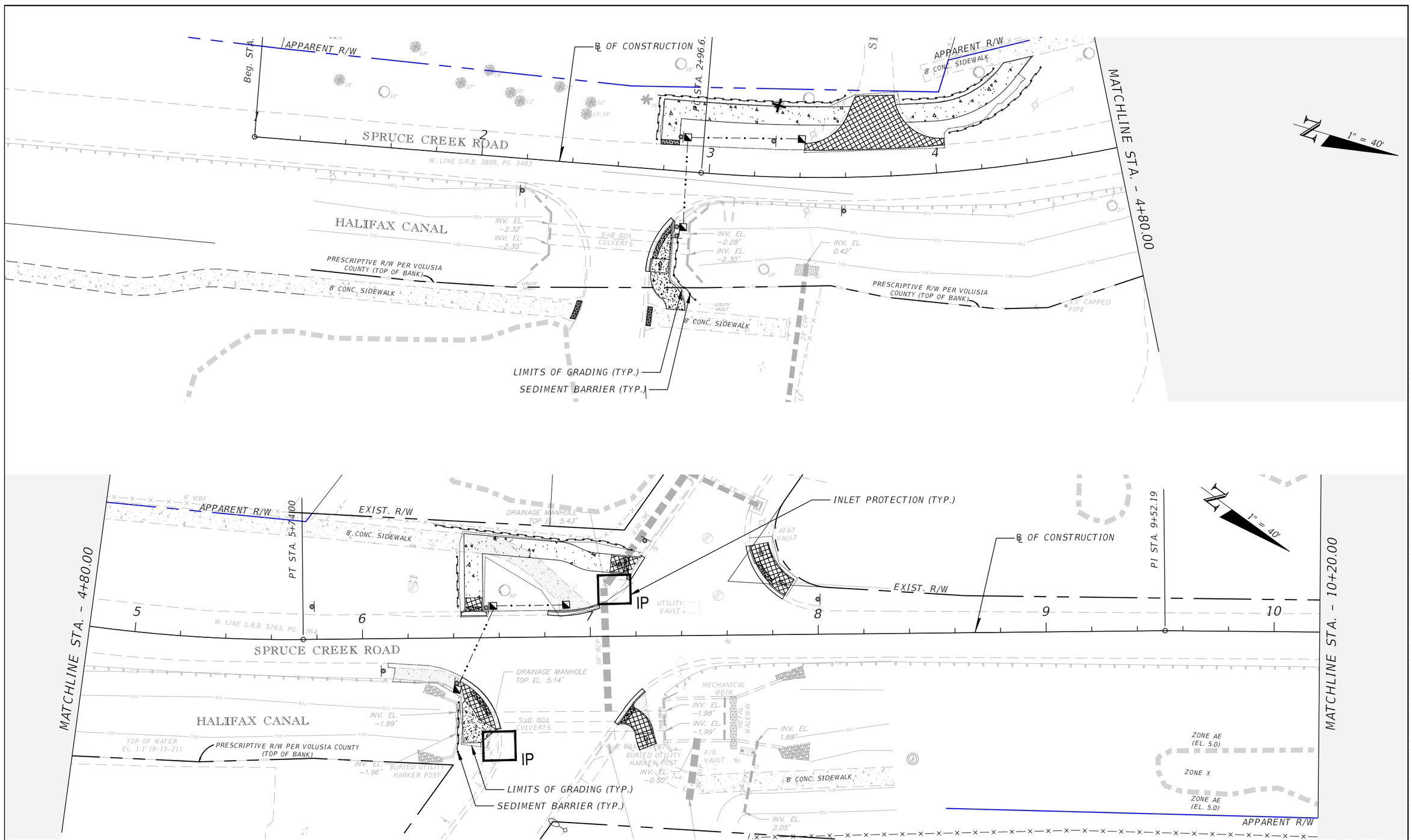

THE OFFICIAL RECORD OF THIS SHEET IS THE ELECTRONIC FILE DIGITALLY SIGNED AND SEALED UNDER RULE 61G15-23.004, F.A.C.

REVISIONS	
DATE	DESCRIPTION

CITY OF PORT ORANGE
1000 CITY CENTER CIRCLE
PORT ORANGE, FL 32129

MERLYNN O. ANDERSON, P.E.
P.E. LICENSE NUMBER 83096

STANLEY CONSULTANTS, INC.
80 SPRING VISTA DRIVE
DEBARY, FL 32713

SJR2C LOOP TRAIL
FROM SOUTH OF SELIN CIR TO HERBERT ST

ROAD	COUNTY	FINANCIAL PROJECT ID
SPRUCE CREEK RD	VOLUSIA	439865-3-54-01

EROSION CONTROL PLAN

SHEET NO. 42

O'Neill, Karen 5/14/2025 12:36:40 PM Z:\2016 Projects\10962 (Port Orange)\TWO 09 - SUNTrail (SJR2C Loop) Spruce Creek Rd\CAD\439865\Roadway\EROSRD01.dwg

LEGEND

EROSION CONTROL SYMBOLS

× TREES TO BE REMOVED

SPRUCE CREEK RD
PARCEL ID: 6304080000120
ALT KEY: 3583957
STATE OF FLORIDA DOT
(O.R.B. 1799, PG. 613)

℄ OF CONSTRUCTION

APPARENT R/W

MATCHLINE STA. - 17+20.00

PI STA. 18+57.99

PI STA. 19+83.22

PI STA. 22+04.09

SPRUCE CREEK ROAD

FLOATING TURBIDITY BARRIER (TYP.)

S-102

S-101

SEDIMENT BARRIER (TYP.)

LIMITS OF GRADING (TYP.)

EXIST. R/W

1" = 40'

DRAINAGE MANHOLE TOP EL. 5.79'

DRAINAGE MANHOLE TOP EL. 5.64'

DRAINAGE MANHOLE TOP EL. 5.55'

DRAINAGE MANHOLE TOP EL. 5.14' INV. EL.

DRAINAGE MANHOLE TOP EL. 4.60' INV. EL.

DRAINAGE MANHOLE TOP EL. 6.78'

CATCH BASIN TOP EL. 4.88'

CATCH BASIN TOP EL. 4.95'

INV. EL. 1.56'

INV. EL. 1.53'

INV. EL. 1.81'

INV. EL. 2.18'

INV. EL. -1.59'

INV. EL. -1.75'

18" RCP

15" RCP

5'x8' BOX CULVERT

PEDESTRIAN CROSSING SIGNAL

FIBER OPTIC VAULT

UTILITY VAULT

FIBER OPTIC MARKER POST

BURIED GAS LINE MARKER POST

8' CONC. SIDEWALK

ZONE X

ZONE AE (EL. 6.0)

ZONE AE (EL. 5.0)

BFOC (D)

18

19

20

21

22

MATCHLINE STA. - 22+60.00

PI STA. 24+57.

PI STA. 27+

SPRUCE CREEK ROAD

FLOATING TURBIDITY BARRIER (TYP.)

S-104

S-103

S-105

S-106

SEDIMENT BARRIER (TYP.)

LIMITS OF GRADING (TYP.)

EXIST. R/W

1" = 40'

CATCH BASIN TOP EL. 5.03' INV. EL.

CATCH BASIN TOP EL. 5.34' INV. EL. 3.07'

CATCH BASIN TOP EL. 5.56' INV. EL. -1.48'

INV. EL. 2.54'

INV. EL. 2.01'

INV. EL. -1.40'

INV. EL. 2.71'

INV. EL. 2.75'

INV. EL. 1.57'

12" RCP

18" RCP

60" RCP

DRIVEWAY

BURIED FIBER OPTIC LINE MARKER POST

UNK INV

TBM 1383
EL. 5.215'
SET IRC
TRAV PT LB 7808

23

24

25

26

27

28

PI STA. 27+6

THE OFFICIAL RECORD OF THIS SHEET IS THE ELECTRONIC FILE DIGITALLY SIGNED AND SEALED UNDER RULE 61G15-23.004, F.A.C.

REVISIONS	
DATE	DESCRIPTION

CITY OF PORT ORANGE
1000 CITY CENTER CIRCLE
PORT ORANGE, FL 32129

MERLYNN O. ANDERSON, P.E.
P.E. LICENSE NUMBER 83096

STANLEY CONSULTANTS, INC.
80 SPRING VISTA DRIVE
DEBARY, FL 32713

SJR2C LOOP TRAIL
FROM SOUTH OF SELIN CIR TO HERBERT ST

ROAD	COUNTY	FINANCIAL PROJECT ID
SPRUCE CREEK RD	VOLUSIA	439865-3-54-01

EROSION CONTROL PLAN

SHEET NO. 43

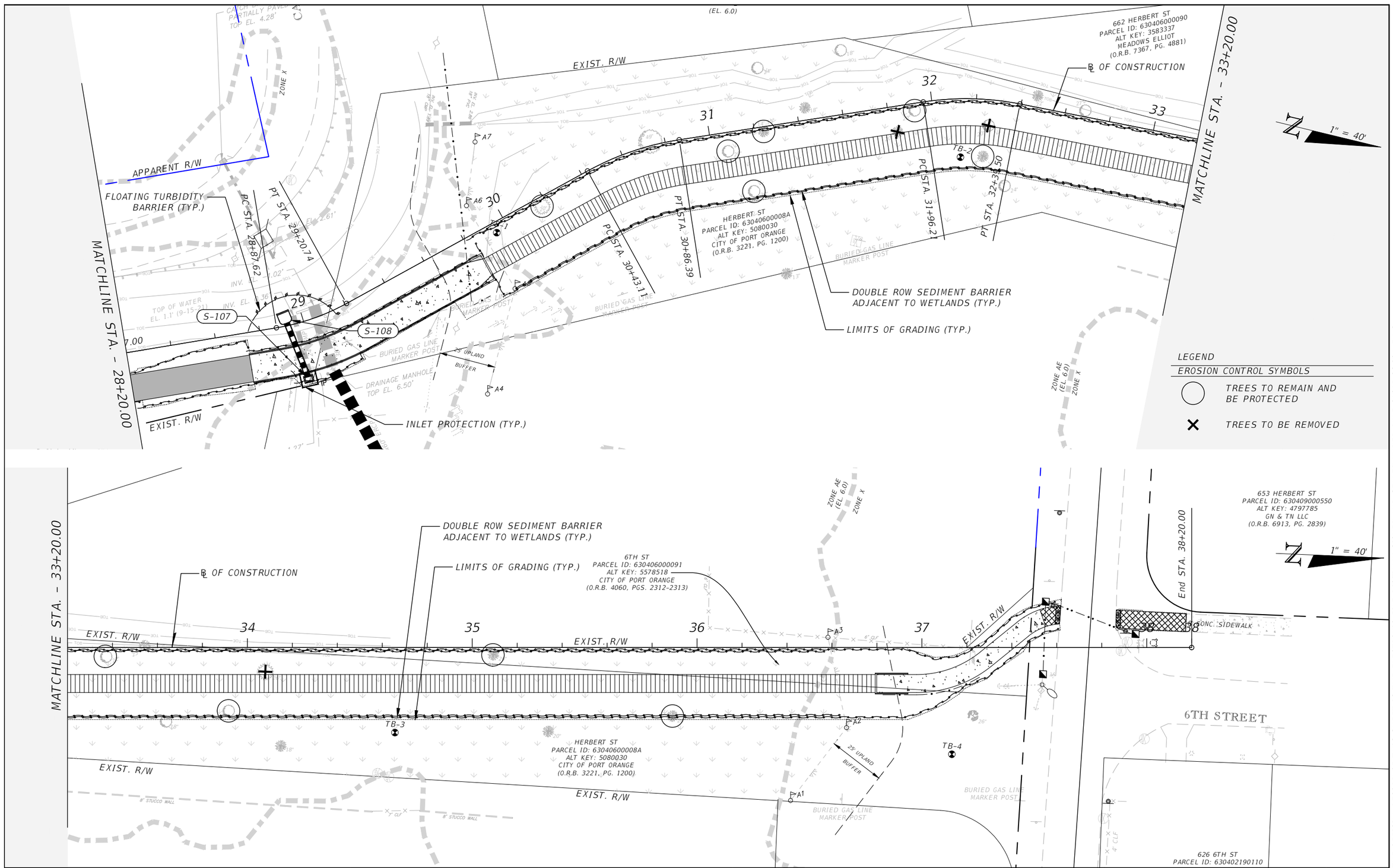

THE OFFICIAL RECORD OF THIS SHEET IS THE ELECTRONIC FILE DIGITALLY SIGNED AND SEALED UNDER RULE 61G15-23.004, F.A.C.

REVISIONS	
DATE	DESCRIPTION

CITY OF PORT ORANGE
1000 CITY CENTER CIRCLE
PORT ORANGE, FL 32129

MERLYNN O. ANDERSON, P.E.
P.E. LICENSE NUMBER 83096

STANLEY CONSULTANTS, INC.
80 SPRING VISTA DRIVE
DEBARY, FL 32713

SJR2C LOOP TRAIL
FROM SOUTH OF SELIN CIR TO HERBERT ST

ROAD	COUNTY	FINANCIAL PROJECT ID
SPRUCE CREEK RD	VOLUSIA	439865-3-54-01

EROSION CONTROL PLAN

SHEET NO. 44

O'Neill, Karen 5/14/2025 12:36:56 PM Z:\2016 Projects\10962 (Port Orange)\TWO 09 - SUNTrail (SJR2C Loop) Spruce Creek Rd\CAD\439865\Roadway\EROSRD01.dwg

PARCEL ID: 633701280012
ALT KEY: 6334447
CITY OF PORT ORANGE
(O.R.B. 5399, PGS. 1067-1077)

725 DUNLAWTON AVE
PARCEL ID: 633701280010
ALT KEY: 3679873
UNITED STATES POSTAL SERVICE
(O.R.B. 2555, PG. 1998)

1" = 40'
0 10 40
Feet

CURVE DATA ℄ CONSTRUCTION (C2)
PI STA. = 21+10.92
DELTA = 10° 42' 28"
D = 5° 43' 46"
T = 93.72
L = 186.89
R = 1000.00
PC STA. = 20+17.20
PT STA. = 22+04.09

MATCHLINE STA. - 17+20.00

MATCHLINE STA. - 22+60.00

DUNLAWTON AVENUE (CR 421)

SAMMS AVENUE

SPRUCE CREEK ROAD

SPRUCE CREEK RD
PARCEL ID: 630408000120
ALT KEY: 3583957
STATE OF FLORIDA DOT
(O.R.B. 1799, PG. 613)

℄ OF CONSTRUCTION

APPARENT R/W

EXIST. R/W

PI STA. 18+57.99

PI STA. 19+83.22

PC STA. 20+17.20

PT STA. 22+04.09

N 35° 32' 37" W

N 35° 59' 50" W

N 35° 21' 02" W

N 24° 38' 34" W

18 19 20 21 22

DRAINAGE MANHOLE
TOP EL. 5.79'

DRAINAGE MANHOLE
TOP EL. 5.64'

DRAINAGE MANHOLE
TOP EL. 5.55'

DRAINAGE MANHOLE
TOP EL. 5.14'
INV. EL. 1.56'

DRAINAGE MANHOLE
TOP EL. 4.60'
INV. EL. 1.53'

DRAINAGE MANHOLE
TOP EL. 5.78'

CATCH BASIN
TOP EL. 4.88'

CATCH BASIN
TOP EL. 4.95'

CATCH BASIN
TOP EL. 5.70'

DRAINAGE MANHOLE
TOP EL. 5.53'

INV. EL. -1.75

INV. EL. -1.59'

INV. EL. 2.18'

INV. EL. 1.81'

PEDESTRIAN CROSSING SIGNAL

UTILITY VAULT

FIBER OPTIC VAULT

FIBER OPTIC MARKER POST

BURIED GAS LINE MARKER POST

5'x8' BOX CULVERT

18" RCP

15" RCP

12" RCP

12" DIP FM

8" PVC REUSE

6" STEEL GAS MAIN

5' CONC. SIDEWALK

ZONE X

ZONE AE (EL. 6.0)

ZONE AE (EL. 5.0)

S-102

S-101

C2

SURFACE WATER IMPACTS
A = 150 SF (0.003 AC)

LEGEND

PLAN SYMBOLS

SURFACE WATER IMPACTS

SPRUCE CREEK RD
PARCEL ID: 630407001820
ALT KEY: 4261231
CITY OF PORT ORANGE
(O.R.B. 5236, PG. 1068)

638 POWERS AVE
PARCEL ID: 630407001690
ALT KEY: 3583761
FLORIDA POWER & LIGHT COMPANY
(M.B. 10, PG. 138)

THE OFFICIAL RECORD OF THIS SHEET IS THE ELECTRONIC FILE DIGITALLY SIGNED AND SEALED UNDER RULE 61G15-23.004, F.A.C.

REVISIONS	
DATE	DESCRIPTION

CITY OF PORT ORANGE
1000 CITY CENTER CIRCLE
PORT ORANGE, FL 32129

MERLYNN O. ANDERSON, P.E.
P.E. LICENSE NUMBER 83096

STANLEY CONSULTANTS, INC.
80 SPRING VISTA DRIVE
DEBARY, FL 32713

SJR2C LOOP TRAIL
FROM SOUTH OF SELIN CIR TO HERBERT ST

ROAD	COUNTY	FINANCIAL PROJECT ID
SPRUCE CREEK RD	VOLUSIA	439865-3-54-01

WETLAND IMPACTS

SHEET NO. 45

703 SAMMS AVE
PARCEL ID: 633701210021
ALT KEY: 3679024
PORT ORANGE INDUSTRIAL LLC
(O.R.B. 3334, PG. 1289)

SPRUCE CREEK RD
PARCEL ID: 633701210022
ALT KEY: 3679032
ATTN PROPERTY TAX DEPT

3000 SPRUCE CREEK RD
PARCEL ID: 633701210020
ALT KEY: 3679016
FLORIDA POWER & LIGHT COMPANY
(O.R.B. 2277, PG. 119)

1" = 40'

0 10 40
Feet

MATCHLINE STA. - 22+60.00

MATCHLINE STA. - 28+20.00

SURFACE WATER IMPACTS
A = 189 SF (0.004 AC)

℄ OF CONSTRUCTION

ZONE X
ZONE AE (EL. 6.0)

PI STA. 24+57.87

PI STA. 27+20.00

CATCH BASIN
TOP EL. 5.03'
INV. EL.

SANITARY MANHOLE
TOP EL. 5.46'
INV. EL.

CATCH BASIN
TOP EL. 5.34'
INV. EL. 3.07'

INV. EL. 2.75'

6" STEEL GAS MAIN

APPARENT R/W

VAULT

INV. EL. 2.54'

8" RCP

12" RCP

8" CMP

23 24 25 26 27 28

N 24° 38' 34" W

N 23° 04' 01" W

N 66° 55' 59" E

SPRUCE CREEK ROAD

CATCH BASIN
TOP EL. 5.56'
INV. EL. -1.48'

4" DIP (MAYBE FIBER OPTIC)

INV. EL. 2.01'

INV. EL. 1.57'

INV. EL. -1.40'

60" RCP

S-104

S-105

S-106

S-103

BURIED GAS LINE MARKER POST

GRAVEL DRIVEWAY

EXIST. R/W

TBM 1383
EL. 5.215'
SET IRC
TRAV PT LB 7808

BURIED FIBER OPTIC LINE MARKER POST

UNK INV

INV. EL. 2.71'

SANITARY MANHOLE
TOP EL. 5.41'
INV. EL.

SURFACE WATER IMPACTS
A = 132 SF (0.003 AC)

SURFACE WATER IMPACTS
A = 160 SF (0.004 AC)

SURFACE WATER IMPACTS
A = 417 SF (0.010 AC)

SURFACE WATER IMPACTS
A = 1,005 SF (0.023 AC)

POWERS AVENUE

638 POWERS AVE
PARCEL ID: 630407001690
ALT KEY: 3583761
FLORIDA POWER & LIGHT COMPANY
(M.B. 10, PG. 138)

639 POWERS AVE
PARCEL ID: 630407001670
ALT KEY: 3583752
GRUBBS FREDA L TR
(O.R.B. 5743, PG. 1494)

LEGEND

PLAN SYMBOLS

SURFACE WATER IMPACTS

THE OFFICIAL RECORD OF THIS SHEET IS THE ELECTRONIC FILE DIGITALLY SIGNED AND SEALED UNDER RULE 61G15-23.004, F.A.C.

REVISIONS	
DATE	DESCRIPTION

CITY OF PORT ORANGE
1000 CITY CENTER CIRCLE
PORT ORANGE, FL 32129

MERLYNN O. ANDERSON, P.E.
P.E. LICENSE NUMBER 83096

STANLEY CONSULTANTS, INC.
80 SPRING VISTA DRIVE
DEBARY, FL 32713

SJR2C LOOP TRAIL
FROM SOUTH OF SELIN CIR TO HERBERT ST

ROAD	COUNTY	FINANCIAL PROJECT ID
SPRUCE CREEK RD	VOLUSIA	439865-3-54-01

WETLAND IMPACTS

SHEET NO. 46

O'Neill, Karen 5/14/2025 12:37:49 PM Z:\2016 Projects\10962 (Port Orange)\TW0 09 - SUNTrail (SJR2C Loop) Spruce Creek Rd\CAD\439865\Roadway\WETLAND IMPACTS.dwg

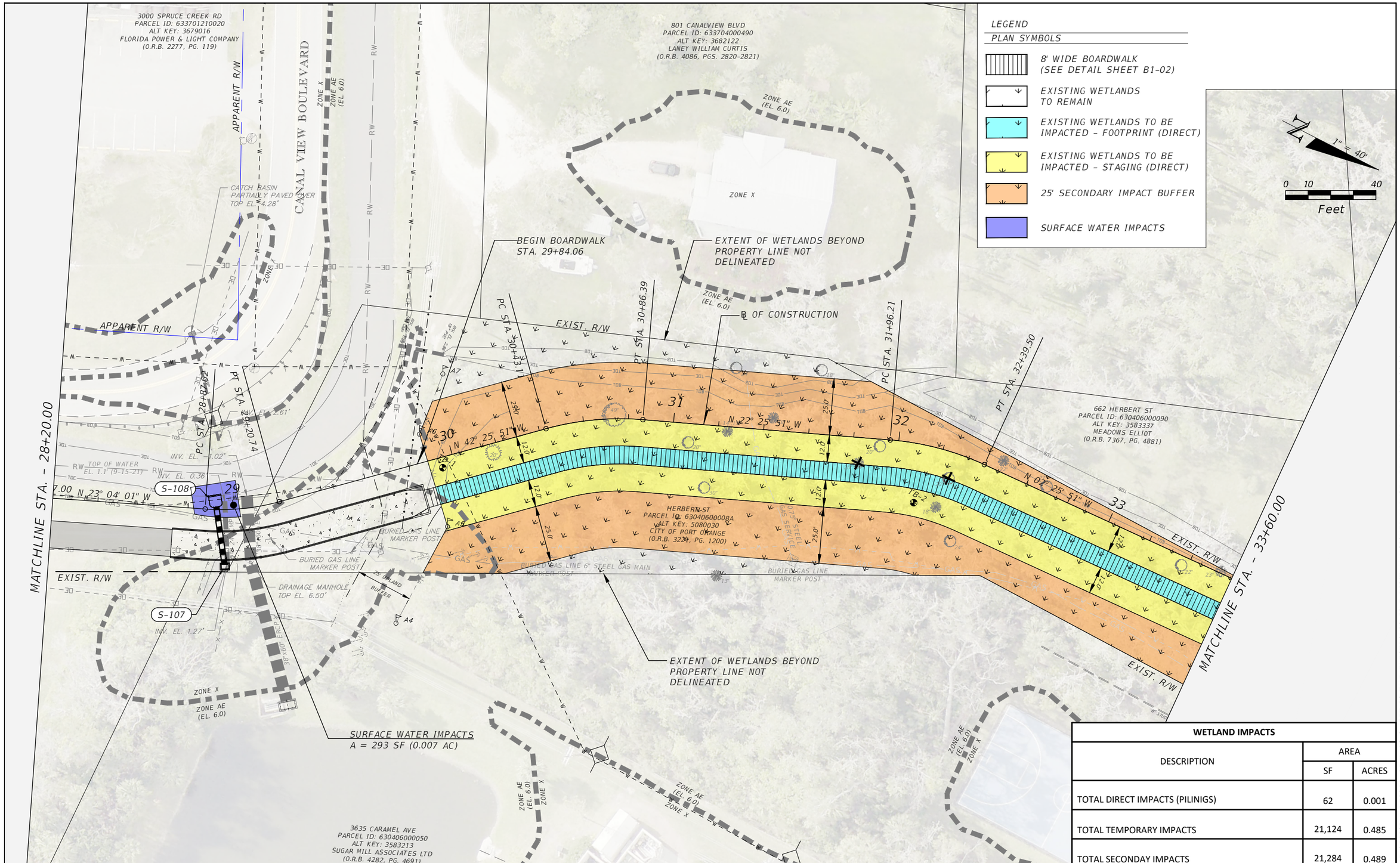

WETLAND IMPACTS		
DESCRIPTION	AREA	
	SF	ACRES
TOTAL DIRECT IMPACTS (PILINIGS)	62	0.001
TOTAL TEMPORARY IMPACTS	21,124	0.485
TOTAL SECONDAY IMPACTS	21,284	0.489

THE OFFICIAL RECORD OF THIS SHEET IS THE ELECTRONIC FILE DIGITALLY SIGNED AND SEALED UNDER RULE 61G15-23.004, F.A.C.

REVISIONS	
DATE	DESCRIPTION

CITY OF PORT ORANGE
1000 CITY CENTER CIRCLE
PORT ORANGE, FL 32129

MERLYNN O. ANDERSON, P.E.
P.E. LICENSE NUMBER 83096

STANLEY CONSULTANTS, INC.
80 SPRING VISTA DRIVE
DEBARY, FL 32713

SJR2C LOOP TRAIL
FROM SOUTH OF SELIN CIR TO HERBERT ST

ROAD	COUNTY	FINANCIAL PROJECT ID
SPRUCE CREEK RD	VOLUSIA	439865-3-54-01

WETLAND IMPACTS

SHEET NO. 47

O'Neill, Karen 5/14/2025 12:38:04 PM Z:\2016 Projects\10962 (Port Orange)\TWO 09 - SUNTrail (SJR2C Loop) Spruce Creek Rd\CAD\439865\Roadway\WETLAND IMPACTS.dwg

LEGEND

PLAN SYMBOLS

8' WIDE BOARDWALK (SEE DETAIL SHEET B1-02)

EXISTING WETLANDS TO REMAIN

EXISTING WETLANDS TO BE IMPACTED - FOOTPRINT (DIRECT)

EXISTING WETLANDS TO BE IMPACTED - STAGING (DIRECT)

25' SECONDARY IMPACT BUFFER

MATCHLINE STA. - 33+60.00

662 HERBERT ST
PARCEL ID: 630406000090
ALT KEY: 3583337
MEADOWS ELLIOT
(O.R.B. 7367, PG. 4881)

EXTENT OF WETLANDS BEYOND PROPERTY LINE NOT DELINEATED

℄ OF CONSTRUCTION

6TH ST
PARCEL ID: 630406000091
ALT KEY: 5578518
CITY OF PORT ORANGE
(O.R.B. 4060, PGS. 2312-2313)

END BOARDWALK
STA. 36+79.20

ZONE AE (EL. 6.0)

ZONE X

STA. 37+74.25 ℄ CONSTRUCTION =
STA. 4+89.39 ℄ HERBERT ST.

APPARENT R/W

HERBERT STREET

EXIST. R/W

SANITARY MANHOLE
TOP EL. 8.70'

℄ OF SIXTH ST.

8' CONC. SIDEWALK

34 35 36 37 38

N 02° 25' 51"W

EXIST. R/W

120'

120'

250'

TB-3

TB-4

A1

A2

A3

25' UPLAND BUFFER

HERBERT ST
PARCEL ID: 630406000008A
ALT KEY: 5080030
CITY OF PORT ORANGE
(O.R.B. 3221, PG. 1200)

EXIST. R/W

BURIED GAS LINE MARKER POST

BURIED GAS LINE MARKER POST

8' STUCCO WALL

6' CLF

EXTENT OF WETLANDS BEYOND PROPERTY LINE NOT DELINEATED

3635 CARAMEL AVE
PARCEL ID: 630406000050
ALT KEY: 3583213
SUGAR MILL ASSOCIATES LTD
(O.R.B. 4282, PG. 4691)

ZONE AE (EL. 6.0)

ZONE X

654 HERBERT ST
PARCEL ID: 630406000080
ALT KEY: 3583329
KEPPER EILEEN A
(O.R.B. 4849, PGS. 2487-2488)

APPARENT R/W

657 HERBERT ST
PARCEL ID: 630409000530
ALT KEY: 4797769
FRAZIER SHAWN FRAIZER JARED
(O.R.B. 3394, PG. 166)

655 HERBERT ST
PARCEL ID: 630409000540
ALT KEY: 4797777
GN & TN LLC
(O.R.B. 6611, PG. 3648)

653 HERBERT ST
PARCEL ID: 630409000550
ALT KEY: 4797785
GN & TN LLC
(O.R.B. 6913, PG. 2839)

6TH STREET

STA. 5+11.76 ℄ HERBERT ST. =
STA. 10+00.00 ℄ SIXTH ST.

626 6TH ST
PARCEL ID: 630402190110
ALT KEY: 3582683
GENSLER BRENDA A
(O.R.B. 7575, PG. 2143)

4' CLF

8' STUCCO WALL

1" = 40'

0 10 40

Feet

WETLAND IMPACTS

DESCRIPTION	AREA	
	SF	ACRES
TOTAL DIRECT IMPACTS (PILINGS)	62	0.001
TOTAL TEMPORARY IMPACTS	21,124	0.485
TOTAL SECONDAY IMPACTS	21,284	0.489

THE OFFICIAL RECORD OF THIS SHEET IS THE ELECTRONIC FILE DIGITALLY SIGNED AND SEALED UNDER RULE 61G15-23.004, F.A.C.

REVISIONS

DATE	DESCRIPTION

CITY OF PORT ORANGE
1000 CITY CENTER CIRCLE
PORT ORANGE, FL 32129

MERLYNN O. ANDERSON, P.E.
P.E. LICENSE NUMBER 83096

STANLEY CONSULTANTS, INC.
80 SPRING VISTA DRIVE
DEBARY, FL 32713

SJR2C LOOP TRAIL
FROM SOUTH OF SELIN CIR TO HERBERT ST

ROAD	COUNTY	FINANCIAL PROJECT ID
SPRUCE CREEK RD	VOLUSIA	439865-3-54-01

WETLAND IMPACTS

SHEET NO. 48

NOTE:
W11-02 SIGNS REQUIRE
PEDESTRIAN IMAGES TO FACE
DIRECTION OF CROSSWALK

POWER SERVICE LOCATION
5 LF 630-2-11
30 LF 630-2-14
1 EA 639-1-112
95 LF 639-2-1
1 EA 641-2-12

W11-02
(2) 30" X 30"
W16-07PL
24" X 12"
W16-07PR
24" X 12"
FTP-68C-21
9" X 18"
654-2-12 1 AS
STA. 2+87

D3-1
24" X 8"
W14-1A
36" X 8"
700-1-111 1 AS
700-1-600 1 AS

R01-05BL
36" X 36"
700-1-111 1 AS
STA. 3+28

℄ OF CONSTRUCTION

APPARENT R/W

BEGIN SIGNING AND
PAVEMENT MARKINGS
STA. 2+19.00

24" WHITE
PREFORMED (TYP.)

12" WHITE@
9.0' C/C

Beg. STA. 1+00.00

SPRUCE CREEK ROAD

N 12° 10' 41" W

W. LINE O.R.B. 3808, PG. 3

24" WHITE

+19.00

HALIFAX CANAL

PRESCRIPTIVE R/W PER VOLUSIA
COUNTY (TOP OF BANK)

8' CONC. SIDEWALK

250' TO ADVANCED PEDESTRIAN TRAFFIC WARNING SIGN

AHEAD

W11-02
30" X 30"
W16-09P
24" X 12"
700-1-111 1 AS

R01-05BL
36" X 36"
700-1-111 1 AS
STA. 2+19

REMOVE EXISTING PAVEMENT MARKINGS
WITHIN INTERSECTION BY GRINDING

STOP

R01-01
30" X 30"
700-1-111 1 AS
700-1-600 1 AS
STA. 2+88

W11-02
(2) 30" X 30"
W16-07PL
24" X 12"
W16-07PR
24" X 12"
FTP-68C-21
9" X 18"
654-2-12 1 AS
STA. 2+88

PC STA. 2+96.63

+28.00

24" WHITE

C1

630-2-11 50 LF
630-2-12 40 LF
635-2-11 3 EA

SELIN CIR

DEAD END

SELIN CIRCLE (DIRT ROAD)

END PUBLIC
MAINTENANCE

APPARENT R/W

MATCHLINE STA. - 4+80.00

PRESCRIPTIVE R/W PER VOLUSIA
COUNTY (TOP OF BANK)

35" CAPPED
PIPE

AHEAD

W11-02
30" X 30"
W16-09P
24" X 12"
700-1-111 1 AS
STA. 3+59

N

1" = 40'

THE OFFICIAL RECORD OF THIS SHEET IS THE ELECTRONIC FILE DIGITALLY SIGNED AND SEALED UNDER RULE 61G15-23.004, F.A.C.

REVISIONS	
DATE	DESCRIPTION

CITY OF PORT ORANGE
1000 CITY CENTER CIRCLE
PORT ORANGE, FL 32129

MERLYNN O. ANDERSON, P.E.
P.E. LICENSE NUMBER 83096

STANLEY CONSULTANTS, INC.
80 SPRING VISTA DRIVE
DEBARY, FL 32713

SJR2C LOOP TRAIL
FROM SOUTH OF SELIN CIR TO HERBERT ST

ROAD	COUNTY	FINANCIAL PROJECT ID
SPRUCE CREEK RD	VOLUSIA	439865-3-54-01

SIGNING AND PAVEMENT MARKING PLAN

SHEET NO. 49

O'Neill, Karen 5/14/2025 12:38:46 PM Z:\2016 Projects\10962 (Port Orange)\TWO 09 - SUNTrail (SJR2C Loop) Spruce Creek Rd\CAD\439865\Signing\PLANSP01.dwg

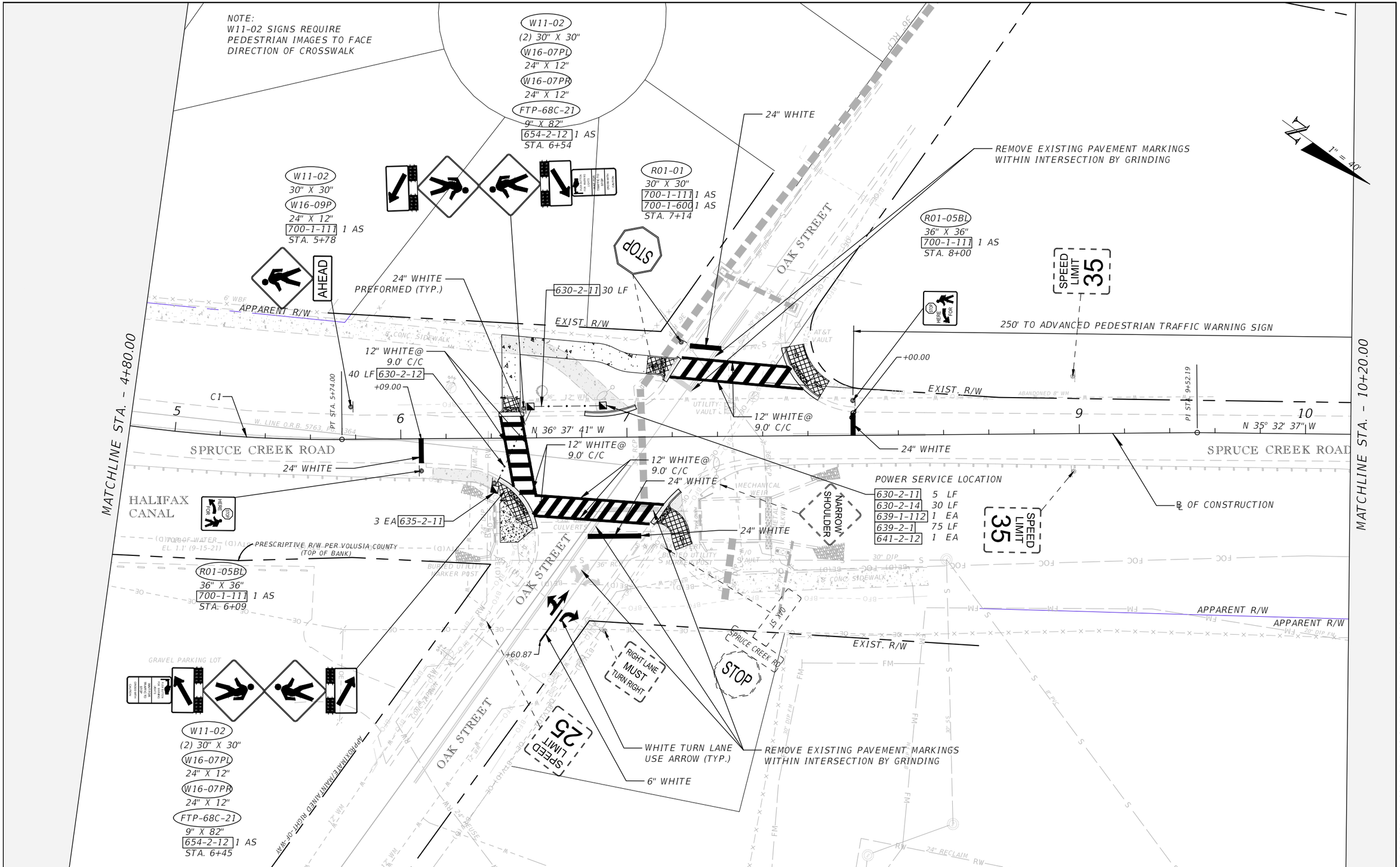

THE OFFICIAL RECORD OF THIS SHEET IS THE ELECTRONIC FILE DIGITALLY SIGNED AND SEALED UNDER RULE 61G15-23.004, F.A.C.

REVISIONS	
DATE	DESCRIPTION

CITY OF PORT ORANGE
1000 CITY CENTER CIRCLE
PORT ORANGE, FL 32129

MERLYNN O. ANDERSON, P.E.
P.E. LICENSE NUMBER 83096

STANLEY CONSULTANTS, INC.
80 SPRING VISTA DRIVE
DEBARY, FL 32713

SJR2C LOOP TRAIL
FROM SOUTH OF SELIN CIR TO HERBERT ST

ROAD	COUNTY	FINANCIAL PROJECT ID
SPRUCE CREEK RD	VOLUSIA	439865-3-54-01

SIGNING AND PAVEMENT MARKING PLAN

SHEET NO.
50

O'Neill, Karen 5/14/2025 12:38:49 PM Z:\2016 Projects\10962 (Port Orange)\TWO 09 - SUNTrail (SJR2C Loop) Spruce Creek Rd\CAD\439865\Signing\PLANSP01.dwg

250' TO ADVANCED PEDESTRIAN TRAFFIC WARNING SIGN

W11-02
30" X 30"
W16-09P
24" X 12"
700-1-111 1 AS
STA. 10+50

AHEAD

APPARENT R/W

11 12 13 14 15

SPRUCE CREEK ROAD

℄ OF CONSTRUCTION

EXIST. R/W

MATCHLINE STA. - 10+20.00

MATCHLINE STA. - 15+60.00

1" = 40'

THE OFFICIAL RECORD OF THIS SHEET IS THE ELECTRONIC FILE DIGITALLY SIGNED AND SEALED UNDER RULE 61G15-23.004, F.A.C.

REVISIONS	
DATE	DESCRIPTION

CITY OF PORT ORANGE
1000 CITY CENTER CIRCLE
PORT ORANGE, FL 32129

MERLYNN O. ANDERSON, P.E.
P.E. LICENSE NUMBER 83096

STANLEY CONSULTANTS, INC.
80 SPRING VISTA DRIVE
DEBARY, FL 32713

SJR2C LOOP TRAIL
FROM SOUTH OF SELIN CIR TO HERBERT ST

ROAD	COUNTY	FINANCIAL PROJECT ID
SPRUCE CREEK RD	VOLUSIA	439865-3-54-01

SIGNING AND PAVEMENT MARKING PLAN

SHEET NO. 51

O'Neill, Karen 5/14/2025 12:38:54 PM Z:\2016 Projects\10962 (Port Orange)\TWO 09 - SUNTrail (SJR2C Loop) Spruce Creek Rd\CAD\439865\Signing\PLANSP01.dwg

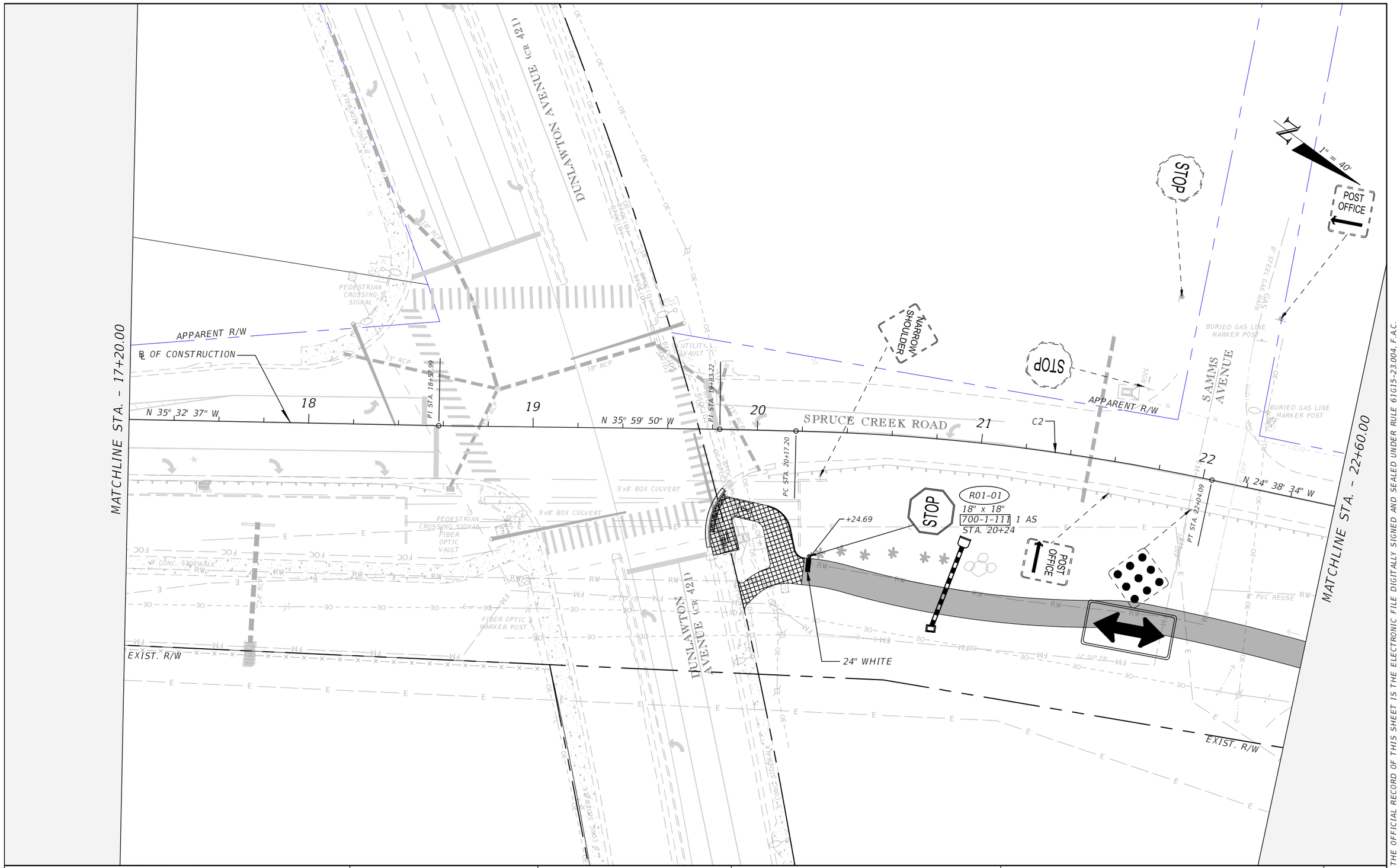

REVISIONS	
DATE	DESCRIPTION

CITY OF PORT ORANGE
1000 CITY CENTER CIRCLE
PORT ORANGE, FL 32129

MERLYNN O. ANDERSON, P.E.
P.E. LICENSE NUMBER 83096

STANLEY CONSULTANTS, INC.
80 SPRING VISTA DRIVE
DEBARY, FL 32713

SJR2C LOOP TRAIL
FROM SOUTH OF SELIN CIR TO HERBERT ST

ROAD	COUNTY	FINANCIAL PROJECT ID
SPRUCE CREEK RD	VOLUSIA	439865-3-54-01

SIGNING AND PAVEMENT MARKING PLAN

SHEET NO. 52

THE OFFICIAL RECORD OF THIS SHEET IS THE ELECTRONIC FILE DIGITALLY SIGNED AND SEALED UNDER RULE 61G15-23.004, F.A.C.

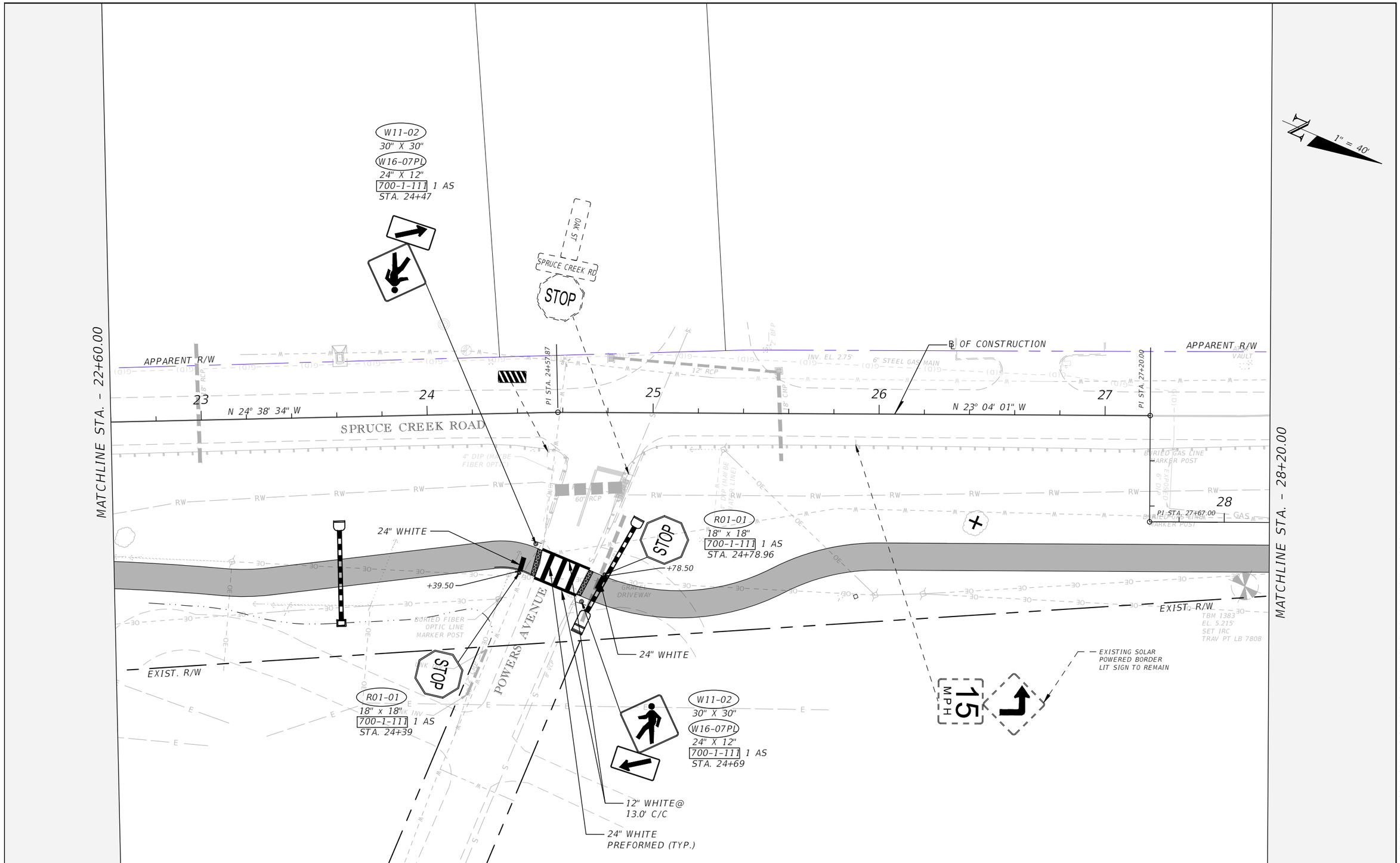

THE OFFICIAL RECORD OF THIS SHEET IS THE ELECTRONIC FILE DIGITALLY SIGNED AND SEALED UNDER RULE 61G15-23.004, F.A.C.

REVISIONS	
DATE	DESCRIPTION

CITY OF PORT ORANGE
1000 CITY CENTER CIRCLE
PORT ORANGE, FL 32129

MERLYNN O. ANDERSON, P.E.
P.E. LICENSE NUMBER 83096

STANLEY CONSULTANTS, INC.
80 SPRING VISTA DRIVE
DEBARY, FL 32713

SJR2C LOOP TRAIL
FROM SOUTH OF SELIN CIR TO HERBERT ST

ROAD	COUNTY	FINANCIAL PROJECT ID
SPRUCE CREEK RD	VOLUSIA	439865-3-54-01

SIGNING AND PAVEMENT MARKING PLAN

SHEET NO. 53

O'Neill, Karen 5/14/2025 12:39:04 PM Z:\2016 Projects\10962 (Port Orange)\TWO 09 - SUNTrail (SJR2C Loop) Spruce Creek Rd\CAD\439865\Signing\PLANSP01.dwg

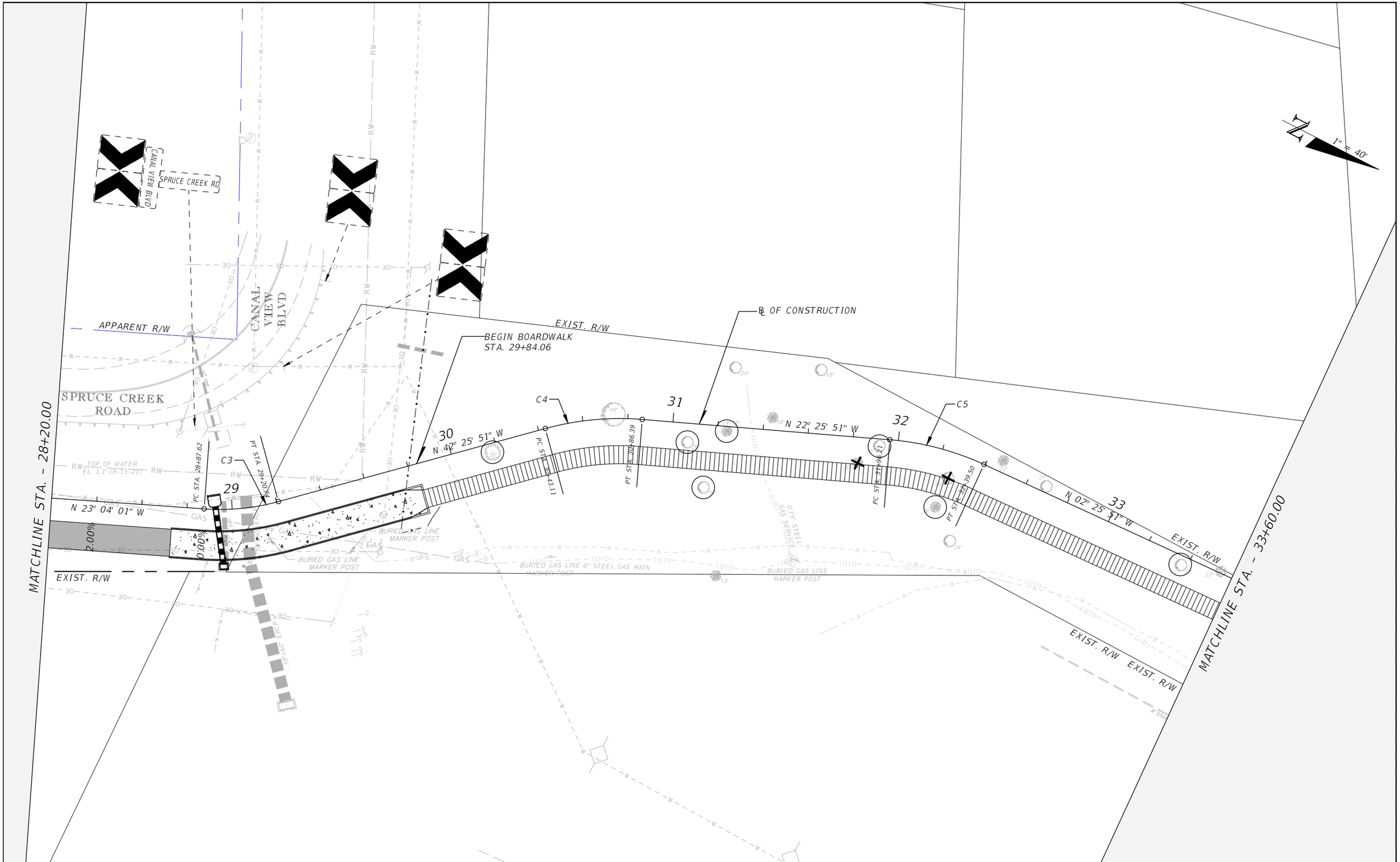

THE OFFICIAL RECORD OF THIS SHEET IS THE ELECTRONIC FILE DIGITALLY SIGNED AND SEALED UNDER RULE 61G15-23.004, F.A.C.

REVISIONS	
DATE	DESCRIPTION

CITY OF PORT ORANGE
1000 CITY CENTER CIRCLE
PORT ORANGE, FL 32129

MERLYNN O. ANDERSON, P.E.
P.E. LICENSE NUMBER 83096

STANLEY CONSULTANTS, INC.
80 SPRING VISTA DRIVE
DEBARY, FL 32713

SJR2C LOOP TRAIL
FROM SOUTH OF SELIN CIR TO HERBERT ST

ROAD	COUNTY	FINANCIAL PROJECT ID
SPRUCE CREEK RD	VOLUSIA	439865-3-54-01

SIGNING AND PAVEMENT MARKING PLAN

SHEET NO.
54

O'Neill, Karen 5/14/2025 12:39:09 PM Z:\2016 Projects\10962 (Port Orange)\TWO 09 - SUNTrail (SJR2C Loop) Spruce Creek Rd\CAD\439865\Signing\PLANSP01.dwg

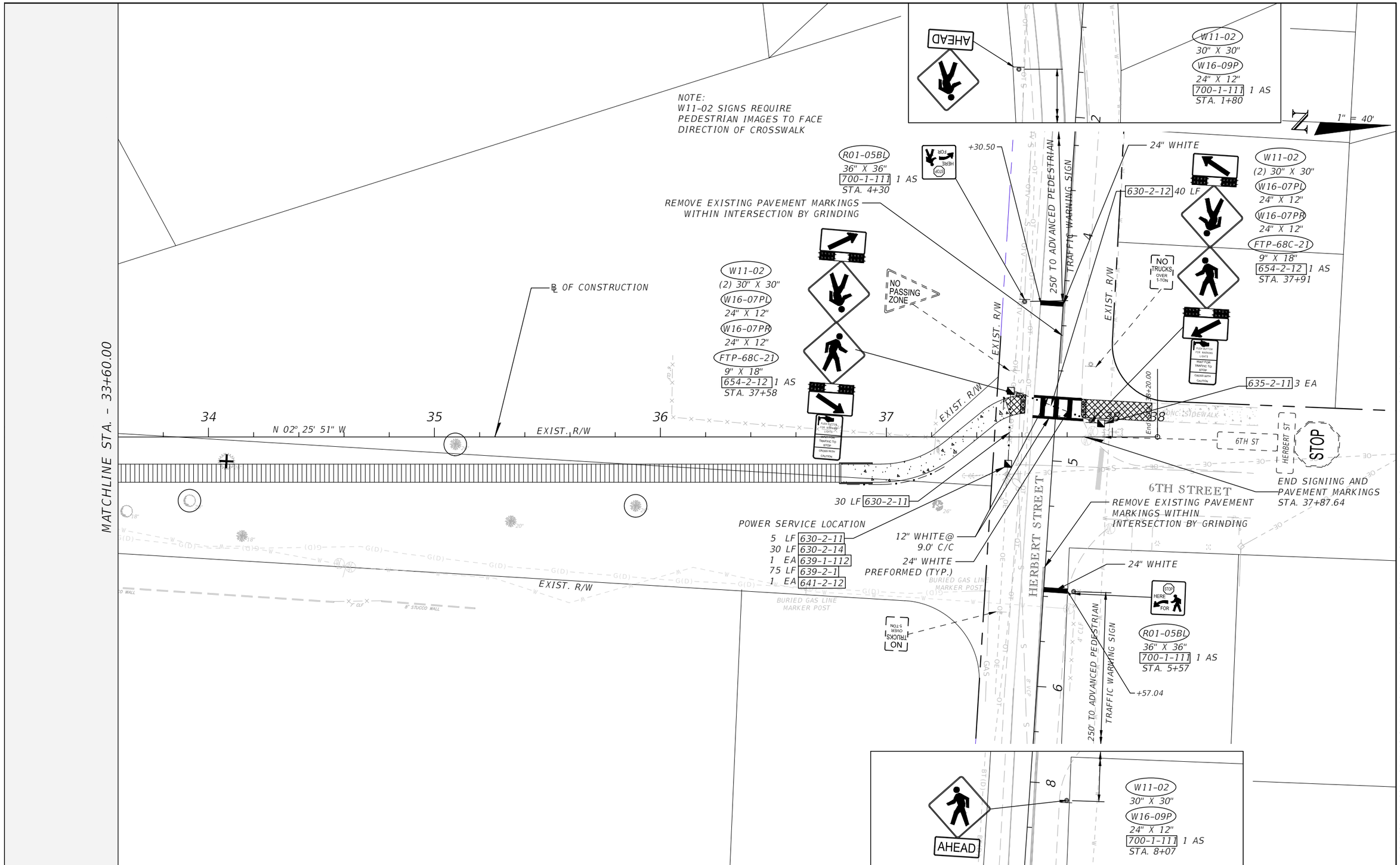

THE OFFICIAL RECORD OF THIS SHEET IS THE ELECTRONIC FILE DIGITALLY SIGNED AND SEALED UNDER RULE 61G15-23.004, F.A.C.

REVISIONS	
DATE	DESCRIPTION

CITY OF PORT ORANGE
1000 CITY CENTER CIRCLE
PORT ORANGE, FL 32129

MERLYNN O. ANDERSON, P.E.
P.E. LICENSE NUMBER 83096

STANLEY CONSULTANTS, INC.
80 SPRING VISTA DRIVE
DEBARY, FL 32713

SJR2C LOOP TRAIL
FROM SOUTH OF SELIN CIR TO HERBERT ST

ROAD	COUNTY	FINANCIAL PROJECT ID
SPRUCE CREEK RD	VOLUSIA	439865-3-54-01

SIGNING AND PAVEMENT MARKING PLAN

SHEET NO.
55

O'Neill, Karen 5/14/2025 12:39:19 PM Z:\2016 Projects\10962 (Port Orange)\TWO 09 - SUNTrail (SJR2C Loop) Spruce Creek Rd\CAD\439865\Signing\PLANSP01.dwg

GENERAL:

1. Notify Allen Cates, Tim Karr, Billy White, and Sean Castello (386) 736-5968 at Traffic Engineering at least two business days prior to beginning work.
2. Coordinate work schedule, coordinate timing and authorization of power service with Allen Cates, Billy White, Bobby Maddox, Tim Karr, and Sean Castello (386) 736-5968 at Volusia County Traffic Engineering.
3. All materials and hardware must be pre-approved by Volusia County Traffic Engineering.
4. Unless otherwise noted, all removed equipment must be disposed of by the Contractor in areas provided by the Contractor.
5. Notify Sunshine One-Call 1-800-432-4770 at least two business days in advance of any excavation work which would otherwise interfere with any above ground or below ground utilities. Maintain current locate ticket throughout the duration of the work. County of Volusia is not a member of the Sunshine One-Call, for locates call (386) 736-5968, Volusia County Traffic Engineering to request to complete a locate ticket to schedule the locate.
6. Verify color codes for signal cable with Volusia County Traffic Engineering before ordering.
7. No test borings were made where conduit runs are to be installed by jacking, directional boring, or trenching. the job site conditions must be examined prior to a bid proposal.
8. A signal inspection must be scheduled with Allen Cates, Billy White, and Sean Castello (Volusia County Traffic Engineering) (386) 736-5968 10 days prior to the signal being place into operation.
9. At the time of final inspection, two sets of construction "As-Built" plans must be provided: one to Volusia County Traffic Engineering and one for the traffic signal controller cabinet.
10. These plans reflect conditions known during plan development. In the event actual physical conditions prevent the application or the progression of any work specified in these plans, the Engineer must be notified immediately and prior to any further work activity.
11. At no time is the contractor to change any signal timings. Volusia County will maintain all signal timings before, during and after construction. If any timing changes are made by the contractor, a timing sheet must be placed in the controller cabinet with date and time of installing, along with a contact number.
12. The existing power utility must be contacted to determine if a service processing fee is required. If required, fee must be included as part of payment for the electrical power service assembly.
13. An I.M.S.A. Level II signal technician must be on site through all phases of construction and on call with a two hour max. response time.
14. Unless otherwise stated, elevations listed in these plans were derived from rod readings.

CONDUIT / PULL BOXES:

1. All conduit must be 2" minimum diameter unless otherwise specified in the plans. Aboveground conduit must be 2" rigid galvanized steel, unless otherwise indicated. Underground conduit must be schedule 40 buried at 36" minimum depth, unless otherwise indicated.
2. As directed by the project Engineer, conduit must be adjusted vertically to avoid any possible conflicts with underground utilities.
3. Pull boxes must not be located at the bottom of any ditch or retention area/pond.
4. All ends of conduits in pull boxes and cabinets must be sealed with electrical putty after wiring is complete.
5. Traffic signal pull boxes must be composite and the covers must be FDOT approved of non-metallic construction with recessed cover logo "TRAFFIC SIGNALS" (quazite 1324 bk.,1212ba or equal)(17"X30")
6. All pull boxes and fiber boxes must have a concrete apron around the pull box per FDOT Specifications.

THE OFFICIAL RECORD OF THIS SHEET IS THE ELECTRONIC FILE DIGITALLY SIGNED AND SEALED UNDER RULE 61G15-23.004, F.A.C.

REVISIONS	
DATE	DESCRIPTION

CITY OF PORT ORANGE
1000 CITY CENTER CIRCLE
PORT ORANGE, FL 32129

MERLYNN O. ANDERSON, P.E.
P.E. LICENSE NUMBER 83096

STANLEY CONSULTANTS, INC.
80 SPRING VISTA DRIVE
DEBARY, FL 32713

SJR2C LOOP TRAIL
FROM SOUTH OF SELIN CIR TO HERBERT ST

ROAD	COUNTY	FINANCIAL PROJECT ID
SPRUCE CREEK RD	VOLUSIA	439865-3-54-01

SIGNALIZATION GENERAL NOTES

SHEET NO. 56

DUNLAWTON AVE

R/W LINE

EXISTING MAST ARM POLE TO REMAIN

R/W LINE

PI STA. 18+57.99

EXISTING MAST ARM POLE TO REMAIN

18

19

20

SPRUCE CREEK RD

PEDESTRIAN POLE
STA. 19+88.24
41.68' Rt.

1 EA	646-1-11
1 EA	653-1-11
1 AS	665-1-11

1-HV (PED), 1-LV (PED)
2 RUNS @ 10 LF 630-2-11

PI STA. 19+83.22

PEDESTRIAN POLE
STA. 19+91.20
31.39' Rt.
(SEE NOTE 1)

646-1-11	1 EA
653-1-11	1 EA
665-1-11	1 AS

P2(1) P4(1)

PED. SIGNAL
COUNT-DOWN
1-SECT., 1-WAY

(R10-3i) 2 EA

START CROSSING
Watch For Vehicles
DON'T START
Finish Crossing If Started
TIME REMAINING To Finish Crossing
DON'T CROSS
PUSH BUTTON TO CROSS
DUNLAWTON RD

(1)

START CROSSING
Watch For Vehicles
DON'T START
Finish Crossing If Started
TIME REMAINING To Finish Crossing
DON'T CROSS
PUSH BUTTON TO CROSS
SPRUCE CREEK RD

(1)

1" = 20'

P2

P4

PC STA. 20+17.20

1-HV (PED), 1-LV (PED)
630-2-11 2 RUNS @ 20 LF

EXISTING SIGNAL CONTROLLER CABINET TO REMAIN
632-7-2 50 LF

REMOVE EXISTING TRAFFIC SIGNAL PULL BOXES AND INSTALL NEW PULL BOXES TO MATCH NEW CONCRETE GRADE

EXISTING MAST ARM POLE TO REMAIN

REMOVE EXISTING PEDESTRIAN SIGNAL HEADS AND DETECTORS
653-1-60 2 EA
665-1-60 2 EA

635-2-11 3 EA

R/W LINE

5'x8' BOX CULVERT

5'x8' BOX CULVERT

SET IRC TRAV PT LB 7808

PEDESTRIAN CROSSING SIGNAL

FIBER OPTIC VAULT

FIBER OPTIC MARKER POST

UTILITY VAULT

NOTES:
1. PEDESTRIAN POLE IS TO BE EMBEDDED IN THE CONCRETE CURB PER INDEX 646-001 OF THE FDOT STANDARD PLANS.
2. MAJOR STREET: DUNLAWTON AVENUE (45 MPH)
   MINOR STREET: SPRUCE CREEK ROAD (35 MPH)

REVISIONS	
DATE	DESCRIPTION

CITY OF PORT ORANGE
1000 CITY CENTER CIRCLE
PORT ORANGE, FL 32129

MERLYNN O. ANDERSON, P.E.
P.E. LICENSE NUMBER 83096

STANLEY CONSULTANTS, INC.
80 SPRING VISTA DRIVE
DEBARY, FL 32713

SJR2C LOOP TRAIL
FROM SOUTH OF SELIN CIR TO HERBERT ST

ROAD	COUNTY	FINANCIAL PROJECT ID
SPRUCE CREEK RD	VOLUSIA	439865-3-54-01

SIGNALIZATION PLAN

SHEET NO. 57

THE OFFICIAL RECORD OF THIS SHEET IS THE ELECTRONIC FILE DIGITALLY SIGNED AND SEALED UNDER RULE 61G15-23.004, F.A.C.

O'Neill, Karen 5/14/2025 12:39:56 PM Z:\2016 Projects\10962 (Port Orange)\TWO 09 - SUNTrail (SJR2C Loop) Spruce Creek Rd\CAD\439865\Signals\PLANSG01.dwg

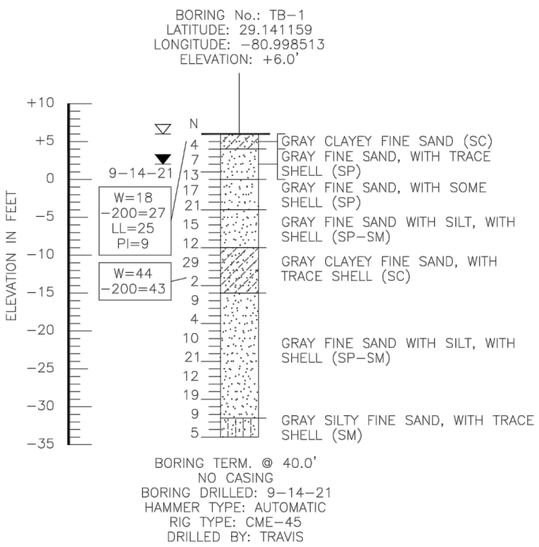

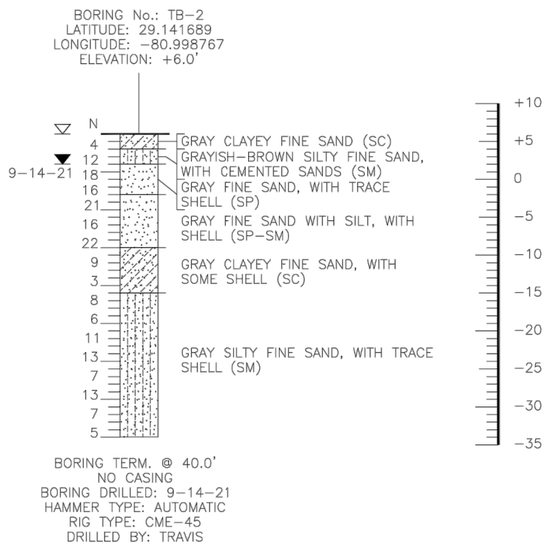

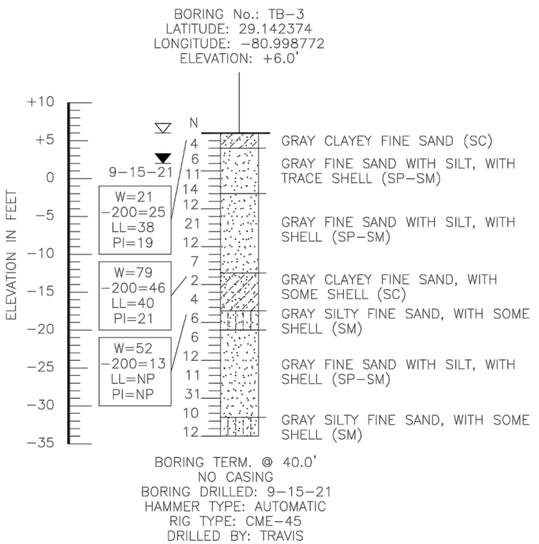

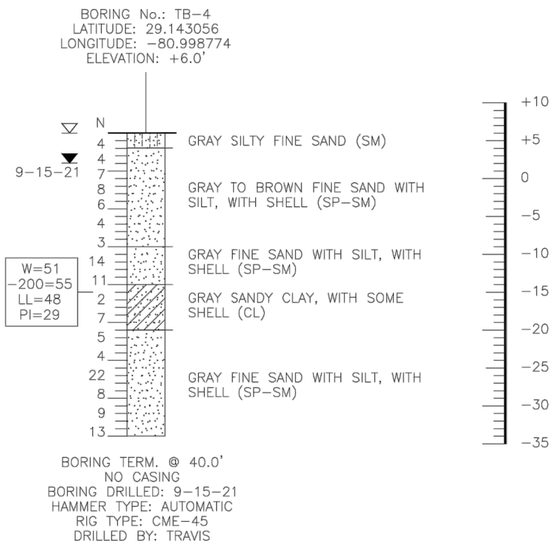



LEGEND

B-1 APPROXIMATE LOCATION OF STANDARD PENETRATION TEST BORING

NOTE: PLAN AS SHOWN IS PRELIMINARY FOR REPRESENTATION OF BORING LOCATIONS ONLY AND MAY NOT BE INDICATIVE OF FINAL CONTRACT PLANS.

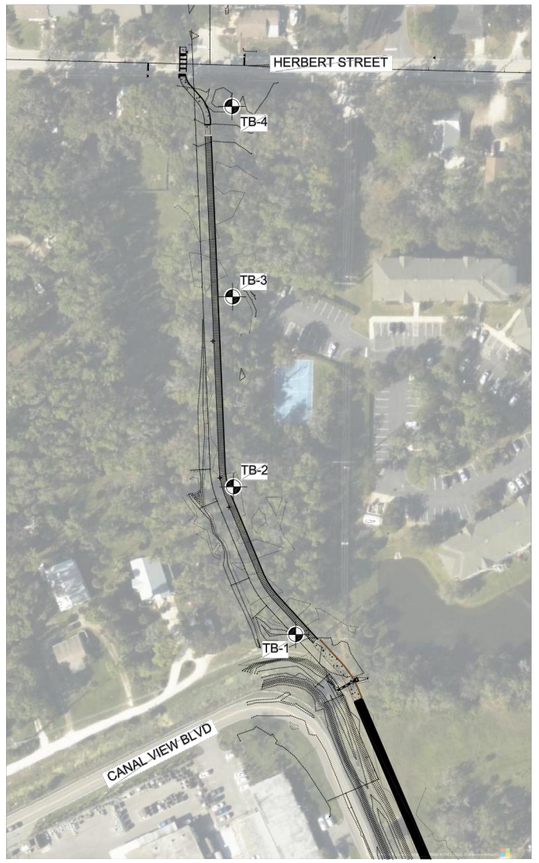

LEGEND

- SAND
- SILTY SAND
- CLAYEY SAND
- SANDY CLAY
- (SP) UNIFIED SOIL CLASSIFICATION GROUP SYMBOL
- 8-11-11 ENCOUNTERED GROUNDWATER LEVEL (DATE OF READING)
- ESTIMATED NORMAL SEASONAL HIGH GROUNDWATER LEVEL
- W=0, -200=0, LL=0, PI=0, NP= NATURAL MOISTURE CONTENT (%), FINES PASSING No. 200 SIEVE (%), LIQUID LIMIT (%), PLASTICITY INDEX (%), NON-PLASTIC
- N STANDARD PENETRATION RESISTANCE IN BLOWS PER FOOT UNLESS OTHERWISE NOTED

AUTOMATIC HAMMER

STANDARD PENETRATION TEST DATA

SPOON INSIDE DIA.	1 3/8 in.
SPOON OUTSIDE DIA.	2 in.
ASTM STANDARD DROP	AUTOMATIC HAMMER
AVG. HAMMER DROP	30 in.
HAMMER WEIGHT	140 lbs.

GRANULAR MATERIALS

RELATIVE DENSITY	SPT (BLOWS/FOOT)
VERY LOOSE	LESS THAN 3
LOOSE	3-8
MEDIUM DENSE	8-24
DENSE	24-40
VERY DENSE	GREATER THAN 40

SILTS AND CLAYS

CONSISTENCY	SPT (BLOWS/FOOT)
VERY SOFT	LESS THAN 1
SOFT	1-3
FIRM	3-6
STIFF	6-12
VERY STIFF	12-24
HARD	GREATER THAN 24

NOTES:

1) LAYER BOUNDARIES ARE APPROXIMATE AND REPRESENT SOIL LAYERS AT EACH TEST HOLE LOCATION ONLY. SUBSURFACE VARIATIONS BETWEEN BORINGS SHOULD BE ANTICIPATED.
2) BASED ON A REVIEW OF THE ST. JOHNS RIVER WATER MANAGEMENT DISTRICT POTENTIOMETRIC MAPS OF THE UPPER FLORIDAN AQUIFER FOR THIS PROJECT AREA, THE POTENTIAL ARTESIAN HEAD ELEVATION IS ESTIMATED TO BE +0 FEET NGVD. THE CONTRACTOR SHALL BE PREPARED TO HANDLE ARTESIAN WATER LEVELS UP TO ELEVATION +0 FEET NGVD.
3) LATITUDE AND LONGITUDE AT BORING LOCATIONS IS BASED ON HANDHELD GPS DEVICE.
4) ELEVATION AT BORING LOCATIONS IS BASED ON REVIEW OF PROJECT TOPOGRAPHIC INFORMATION AND SHOULD BE CONSIDERED APPROXIMATE.

ENVIRONMENTAL CLASSIFICATION:

SUPERSTRUCTURE: N/A

SUBSTRUCTURE:

STEEL: EXTREMELY AGGRESSIVE
CONCRETE: MODERATELY AGGRESSIVE (pH=5.9)

THE OFFICIAL RECORD OF THIS SHEET IS THE ELECTRONIC FILE DIGITALLY SIGNED AND SEALED UNDER RULE 61G15-23.004, F.A.C.

REVISIONS	
DATE	DESCRIPTION

CITY OF PORT ORANGE
1000 CITY CENTER CIRCLE
PORT ORANGE, FL 32129

ELIAS N. JAMMAL, P.E.
P.E. LICENSE NUMBER 60126

TERRACON
1675 LEE ROAD
WINTER PARK, FL 32789

SJR2C LOOP TRAIL
FROM SOUTH OF SELIN CIR TO HERBERT ST

ROAD	COUNTY	FINANCIAL PROJECT ID
SPRUCE CREEK RD	VOLUSIA	439865-3-54-01

REPORT OF CORE BORINGS

SHEET NO. 58

GENERAL NOTES:

1. DESIGN SPECIFICATIONS:
   A. FLORIDA DEPARTMENT OF TRANSPORTATION STRUCTURES MANUAL DATED JANUARY 2024.

   B. AASHTO LRFD SPECIFICATION FOR HIGHWAY BRIDGES, 9TH EDITION IN CONJUNCTION WITH AASHTO LRFD GUIDE SPECIFICATION FOR DESIGN OF PEDESTRIAN BRIDGES, 2009 EDITION.

2. CONSTRUCTION SPECIFICATIONS:
   A. FLORIDA DEPARTMENT OF TRANSPORTATION STANDARD SPECIFICATIONS FOR ROAD AND BRIDGE CONSTRUCTION, FY 2023–2024 EDITION

3. DESIGN METHODOLOGY:
   A. DESIGN TIMBER AND CONNECTIONS IN ACCORDANCE WITH THE LRFD METHOD.

4. DESIGN LOADINGS:
   A. PEDESTRIAN LIVE LOAD = 90 PSF IN ACCORDANCE WITH THE LRFD METHOD.
   B. MAINTENANCE VEHICLE = 3,046 LBS MAX (WET-WEIGHT+PAYLOAD).
   C. DESIGN DEAD LOADS: WEIGHT OF TIMBER = 40 PCF
      MAX. WEIGHT OF HDPE = 47 PCF (ASTM D6111)
   D. AN ALLOWANCE FOR A 1" DIAMATER CONDUIT FOR LIGHTING HAS BEEN INCLUDED IN THE DESIGN.

5. MATERIALS AND FABRICATION:
   A. TOP OF RAILING MUST BE HIGH DENSITY POLYETHYLENE (HDPE) WITH A MINIMUM 50 YEAR DESIGN LIFE WITH THE FOLLOWING MINIMUM PROPERTIES (ASTM D6109):
      1) ALLOWABLE FLEXURAL STRESS = 1,200 PSI
      2) MODULUS OF ELASTICITY = 114,000 PSI

   B. ALL LUMBER SHALL BE CUT, DRILLED AND FABRICATED PRIOR TO PRESSURE TREATMENT WITH PRESERVATIVES.

   C. ALL LUMBER SHALL BE TREATED IN ACCORDANCE WITH SPECIFICATION 955.

   D. ALL LUMBER MUST BE VISUALLY GRADED NO. 1 DENSE OR BETTER SOUTHERN PINE IN ACCORDANCE WITH SPECIFICATION 952, EXCEPT AS MODIFIED BY NOTE E. ALL LUMBER IS TO BE FURNISHED PER THE REQUIREMENTS OF THE AMERICAN SOFTWOOD LUMBER STANDARDS, PS20-20, AS SPECIFIED IN THE TABLE BELOW:

DIMENSION OF SAWN SOUTHERN PINE LUMBER								
SURFACE	THICKNESS (IN)			WIDTH (IN)				
NOMINAL	2	3	4	6	8	10	12	16
ACTUAL	1½	2½	3½	5½	7¼	9¼	11¼	15¼

   E. LIGHT POSTS ARE NOMINAL 6"X6" SELECT STRUCTURAL SOUTHERN PINE TIMBER PER SPECIFICATION 952.

   F. VARIATIONS IN DEPTH BETWEEN STRINGERS MUST NOT EXCEED ⅜ IN. SO AS TO PROVIDE A FLAT SURFACE.

   G. MOISTURE CONTENT OF LUMBER 4 IN. OR LESS IN NOMINAL THICKNESS MUST BE 19 PERCENT OR LESS.

   H. MAXIMUM DEFLECTION DUE TO LIVE LOAD FOR HORIZONTAL LUMBER COMPONENTS IS LIMITED TO A VALUE EQUAL TO SPAN/360.

   I. SPLICES OF JOISTS SHALL BE MADE OVER SUPPORTS.

   J. BOARDWALK DECKING SPLICES ARE NOT PERMITTED.

   K. FOR VERTICAL AND HORIZONTAL ALIGNMENT REFER TO PATHWAY PLANS. VERIFY ALL DIMENSIONS BEFORE CONSTRUCTION.

   L. TIMBER BOARDWALK SUBSTRUCTURE AND PILE FOUNDATIONS SHALL CONFORM TO SPECIFICATIONS 951 THROUGH 954.

6. CONNECTORS:
   A. USE BOLTS OR SCREWS, AS SHOWN, FOR ASSEMBLY ON THE BOARDWALK. ALL BOLT ASSEMBLIES SHALL HAVE WASHERS UNDER BOTH THE BOLT HEAD AND NUTS. SCREWS SHALL BE COUNTERSUNK AND INSTALLED IN HOLES DRILLED WITH A COUNTERSUNK DRILL BIT. NAILS MAY ONLY BE USED FOR PRE-ASSEMBLY AS SHOWN. ALL BOLTS, NUTS, WASHERS, SCREWS AND NAILS SHALL BE HOT-DIP GALVANIZED (HDG) IN ACCORDANCE WITH SPECIFICATION 962-9.

7. TIMBER PILING NOTES:
   A. THE TIMBER PILES SHALL BE ASTM D-25 WITH A MINIMUM TIP DIAMETER OF 8 INCHES AND BUTT DIAMETER OF 12 INCHES PER SPECIFICATION 953-2.

   B. THE FACTORED PILE DESIGN LOAD IS 4.0 TONS. FOR FINAL SEATING, THE NOMINAL BEARING RESISTANCE IS 8.0 TONS BASED ON A RESISTANCE FACTOR OF 0.50. THE TIMBER PILES SHALL BE DRIVEN IN ACCORDANCE WITH SPECIFICATION 455. WAVE EQUATION ANALYSIS SHALL BE PERFORMED BY THE CONTRACTOR TO DETERMINE THE DYNAMIC CAPACITY OF THE TIMBER PILES, BASED ON THE HAMMER TYPE, CUSHION AND DESIGN LOADS BEFORE PILE DRIVING COMMENCEMENT. THE USE OF ENGINEERING NEWS FORMULA WILL NOT BE ACCEPTED. PROVIDE THIS INFORMATION FOR REVIEW BY THE ENGINEER IN ADVANCE OF PILE DRIVING.

   C. THE PILES SHALL BE INSTALLED USING APPROPRIATE EQUIPMENT TO ALLOW DRIVING TO THE REQUIRED BEARING DEPTHS AND TO LIMIT DRIVING STRESSES WITHIN THE PILES. PER NAVAL FACILITIES ENGINEERING COMMAND (NAVFAC) DESIGN MANUAL 7, THE MAXIMUM DRIVING ENERGY FOR TIMBER PILES SHOULD BE LIMITED TO 20,000 FOOT-POUNDS.

   D. THE PILE DRIVING EQUIPMENT MAY CONSIST OF FIXED LEADS OR SWINGING LEADS. IT IS RECOMMENDED TO USE FIXED LEADS WHICH OFFER GOOD CONTROL OF THE PILE ALIGNMENT AND HELP MINIMIZE OVERSTRESSING OF THE PILES FROM ECCENTRIC IMPACTS.

   E. PILE EMBEDMENT DEPTHS CAN BE FOUND IN THE BOARDWALK DATA TABLES SHEET. PILE DRIVING SHALL BE AS CONTINUOUS AS POSSIBLE AND UNINTERRUPTED TO THE TERMINATION DEPTH.

   F. PILES SHALL BE DRIVEN WITH A PROTECTIVE DRIVING CAP OR RING. A PROPERLY FITTED DRIVING CAP SHOULD BE USED FOR THE PILE BUTTS. THE PILE BUTTS SHOULD BE "FRESH HEADED" AND PROPERLY SHAPED TO FIT SNUGLY IN THE DRIVING CAP. PILES THAT HAVE SPLITTING OR BROOMING SHALL BE CUT BACK TO SOLID WOOD BEFORE FINAL RESISTANCE IS MEASURED. FRESH CUT AND SCARS SHALL BE COATED WITH A GENEROUS APPLICATION OF PRESERVATIVE.

   G. PILES SHALL BE DRIVEN PLUMB.

   H. TIMBER PILES SHALL BE SOUTHERN PINE LUMBER MARINE GRADE IN ACCORDANCE WITH AMERICAN WOOD PRESERVER'S ASSOCIATION (AWPA), CATEGORY US5C, AND SOUTHERN PINE INSPECTION BUREAU (SPIB) STANDARD GRADING RULES FOR SOUTHERN PINE LUMBER. TIMBER TO BE TREATED IN ACCORDANCE WITH SPECIFICATION 955.

8. ALL ELEVATIONS REFER TO NAVD 1988 DATUM.

INDEX OF STRUCTURAL SHEETS

B1-01	GENERAL NOTES
B1-02	BOARDWALK DATA TABLES
B1-03	BOARDWALK DETAILS (1 OF 3)
B1-04	BOARDWALK DETAILS (2 OF 3)
B1-05	BOARDWALK DETAILS (3 OF 3)

THE OFFICIAL RECORD OF THIS SHEET IS THE ELECTRONIC FILE DIGITALLY SIGNED AND SEALED UNDER RULE 61G15-23.004, F.A.C.

REVISIONS	
DATE	DESCRIPTION

CITY OF PORT ORANGE
1000 CITY CENTER CIRCLE
PORT ORANGE, FL 32129

MARK NIEDERMANN, P.E.
P.E. LICENSE NUMBER 45957
FLORIDA BRIDGE & TRANSPORTATION, INC.
633 DARTMOUTH STREET
ORLANDO, FL 32804

SJR2C LOOP TRAIL
FROM SOUTH OF SELIN CIR TO HERBERT ST

ROAD	COUNTY	FINANCIAL PROJECT ID
SPRUCE CREEK RD	VOLUSIA	439865-3-54-01

GENERAL NOTES

SHEET NO. B1-01

BOARDWALK BENT LOCATIONS		
BENT NUMBER	STATION	TOP OF DECK ELEVATION
BENT NO. 1	29+84.89	10.25
BENT NO. 2	29+94.89	10.25
BENT NO. 3	30+04.89	10.25
BENT NO. 4	30+14.89	10.25
BENT NO. 5	30+24.89	10.25
BENT NO. 6	30+34.89	10.25
BENT NO. 7	30+43.11	10.25
BENT NO. 8	30+53.93	10.25
BENT NO. 9	30+64.75	10.25
BENT NO. 10	30+75.57	10.25
BENT NO. 11	30+86.39	10.25
BENT NO. 12	30+96.39	10.25
BENT NO. 13	31+06.39	10.25
BENT NO. 14	31+16.39	10.25
BENT NO. 15	31+26.39	10.25
BENT NO. 16	31+36.39	10.25
BENT NO. 17	31+46.39	10.25
BENT NO. 18	31+56.39	10.25
BENT NO. 19	31+66.39	10.25
BENT NO. 20	31+76.39	10.25
BENT NO. 21	31+86.39	10.25
BENT NO. 22	31+96.21	10.25
BENT NO. 23	32+07.03	10.25
BENT NO. 24	32+17.86	10.25
BENT NO. 25	32+28.68	10.25
BENT NO. 26	32+39.50	10.25
BENT NO. 27	32+48.37	10.25
BENT NO. 28	32+58.37	10.25
BENT NO. 29	32+68.37	10.25
BENT NO. 30	32+78.37	10.25
BENT NO. 31	32+88.37	10.25
BENT NO. 32	32+98.37	10.25
BENT NO. 33	33+08.37	10.25
BENT NO. 34	33+18.37	10.25
BENT NO. 35	33+28.37	10.25
BENT NO. 36	33+38.37	10.25
BENT NO. 37	33+48.37	10.25
BENT NO. 38	33+58.37	10.25
BENT NO. 39	33+68.37	10.25
BENT NO. 40	33+78.37	10.25
BENT NO. 41	33+88.37	10.25
BENT NO. 42	33+98.37	10.25
BENT NO. 43	34+08.37	10.25

BOARDWALK BENT LOCATIONS		
BENT NUMBER	STATION	TOP OF DECK ELEVATION
BENT NO. 44	34+18.37	10.25
BENT NO. 45	34+28.37	10.25
BENT NO. 46	34+38.37	10.25
BENT NO. 47	34+48.37	10.25
BENT NO. 48	34+58.37	10.25
BENT NO. 49	34+68.37	10.25
BENT NO. 50	34+78.37	10.25
BENT NO. 51	34+88.37	10.25
BENT NO. 52	34+98.37	10.25
BENT NO. 53	35+08.37	10.25
BENT NO. 54	35+18.37	10.25
BENT NO. 55	35+28.37	10.25
BENT NO. 56	35+38.37	10.25
BENT NO. 57	35+48.37	10.25
BENT NO. 58	35+58.37	10.25
BENT NO. 59	35+68.37	10.25
BENT NO. 60	35+78.37	10.25
BENT NO. 61	35+88.37	10.25
BENT NO. 62	35+98.37	10.25
BENT NO. 63	36+08.37	10.25
BENT NO. 64	36+18.37	10.25
BENT NO. 65	36+28.37	10.25
BENT NO. 66	36+38.37	10.25
BENT NO. 67	36+48.37	10.25
BENT NO. 68	36+58.37	10.25
BENT NO. 69	36+68.37	10.25
BENT NO. 70	36+78.37	10.25

TIMBER PILE INFORMATION					
BOARDWALK BENT LOCATIONS	NO. OF BENTS	MINIMUM PILE DIAMETER AT TIP (IN)	MINIMUM EMBEDMENT LENGTH* (FT)	PILE CUTOFF ELEVATION (FT)	ESTIMATED MINIMUM TIP (FT NAVD)
BENT NO. 1 THRU. BENT NO. 70	70	8	10	9.188	-24.000

*EMBEDMENT DEPTH DEFINED PER SPECIFICATIONS 455-5.9

THE OFFICIAL RECORD OF THIS SHEET IS THE ELECTRONIC FILE DIGITALLY SIGNED AND SEALED UNDER RULE 61G15-23.004, F.A.C.

REVISIONS	
DATE	DESCRIPTION

CITY OF PORT ORANGE
1000 CITY CENTER CIRCLE
PORT ORANGE, FL 32129

MARK NIEDERMANN, P.E.
P.E. LICENSE NUMBER 45957

FLORIDA BRIDGE & TRANSPORTATION, INC.
633 DARTMOUTH STREET
ORLANDO, FL 32804

SJR2C LOOP TRAIL
FROM SOUTH OF SELIN CIR TO HERBERT ST

ROAD	COUNTY	FINANCIAL PROJECT ID
SPRUCE CREEK RD	VOLUSIA	439865-3-54-01

BOARDWALK DATA TABLES

SHEET NO.
B1-02

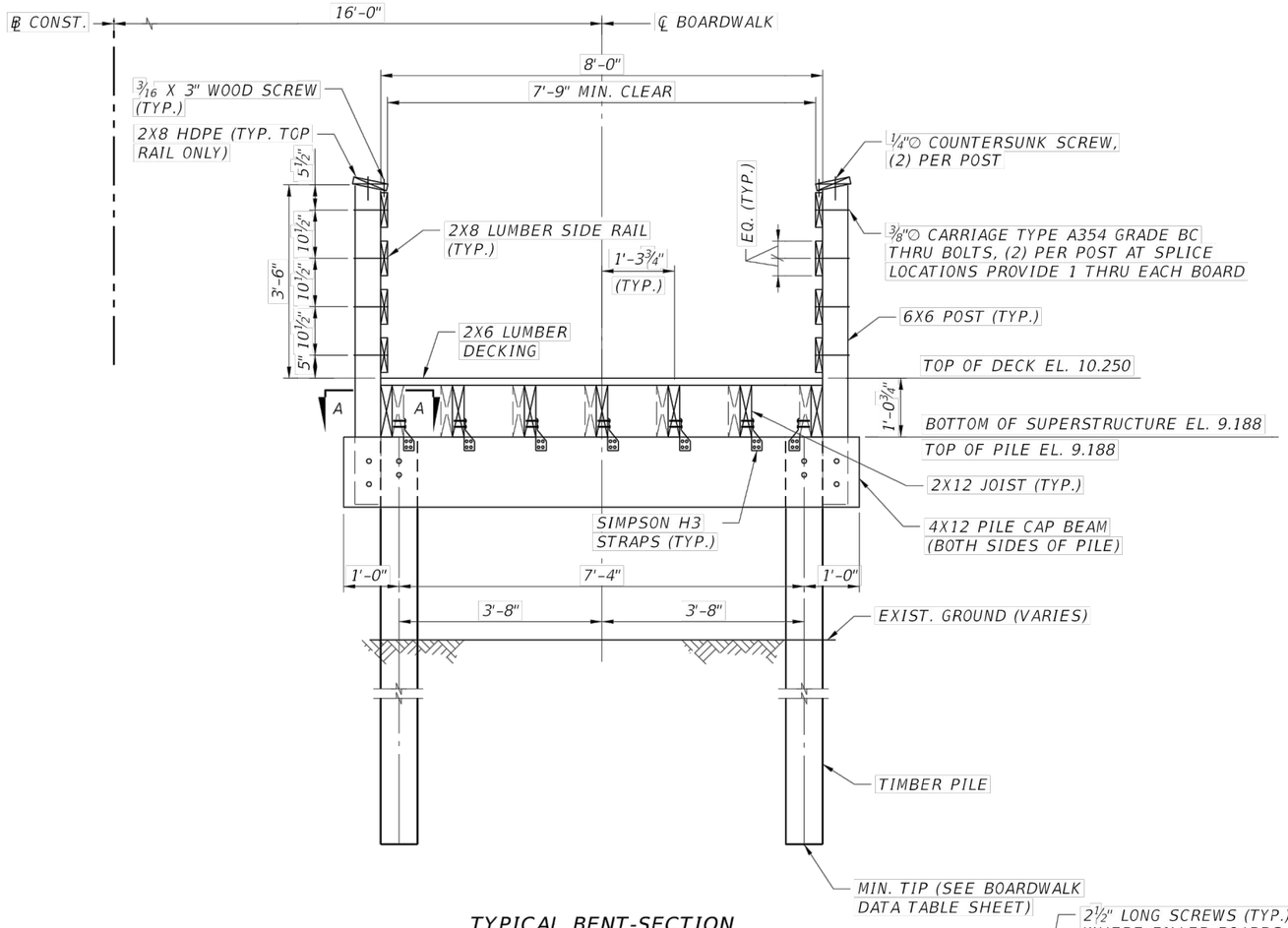

TYPICAL BENT-SECTION

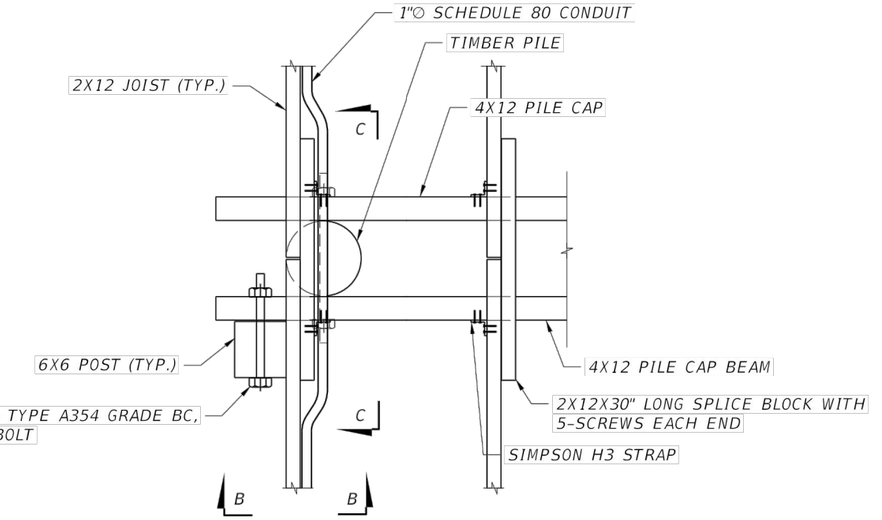

SECTION A-A

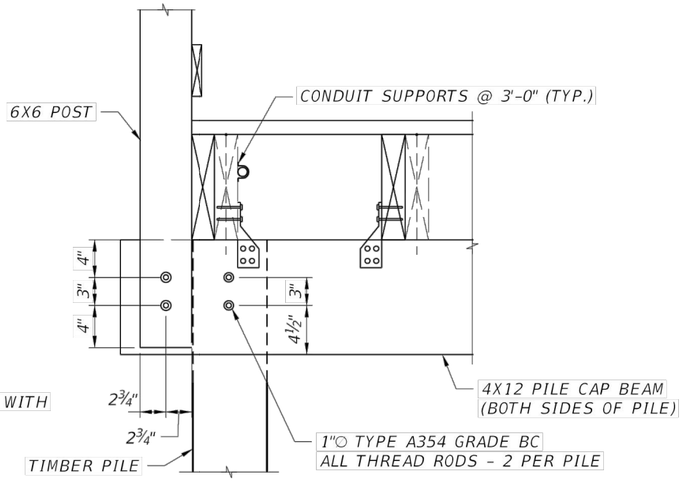

SECTION B-B

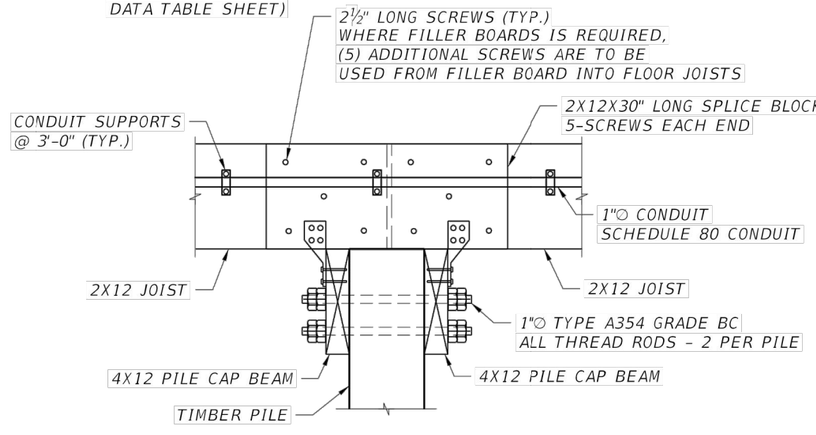

SECTION C-C

NOTES:

1. ALL HARDWARE SHOWN SHALL BE HOT-DIP GALVANIZED (HDG). SIMPSON CONNECTORS SHALL BE GALVANIZED OR ZMAX COATED.
2. SUBMIT DOCUMENTATION FOR ALTERNATIVE CONNECTORS FOR APPROVAL IF IT DIFFERS FROM THE CONNECTORS SHOWN IN THE PLANS.

REVISIONS	
DATE	DESCRIPTION

CITY OF PORT ORANGE
1000 CITY CENTER CIRCLE
PORT ORANGE, FL 32129

MARK NIEDERMANN, P.E.
P.E. LICENSE NUMBER 45957
FLORIDA BRIDGE & TRANSPORTATION, INC.
633 DARTMOUTH STREET
ORLANDO, FL 32804

SJR2C LOOP TRAIL
FROM SOUTH OF SELIN CIR TO HERBERT ST

ROAD	COUNTY	FINANCIAL PROJECT ID
SPRUCE CREEK RD	VOLUSIA	439865-3-54-01

BOARDWALK DETAILS (1 OF 3)

SHEET NO. B1-03

THE OFFICIAL RECORD OF THIS SHEET IS THE ELECTRONIC FILE DIGITALLY SIGNED AND SEALED UNDER RULE 61G15-23.004, F.A.C.

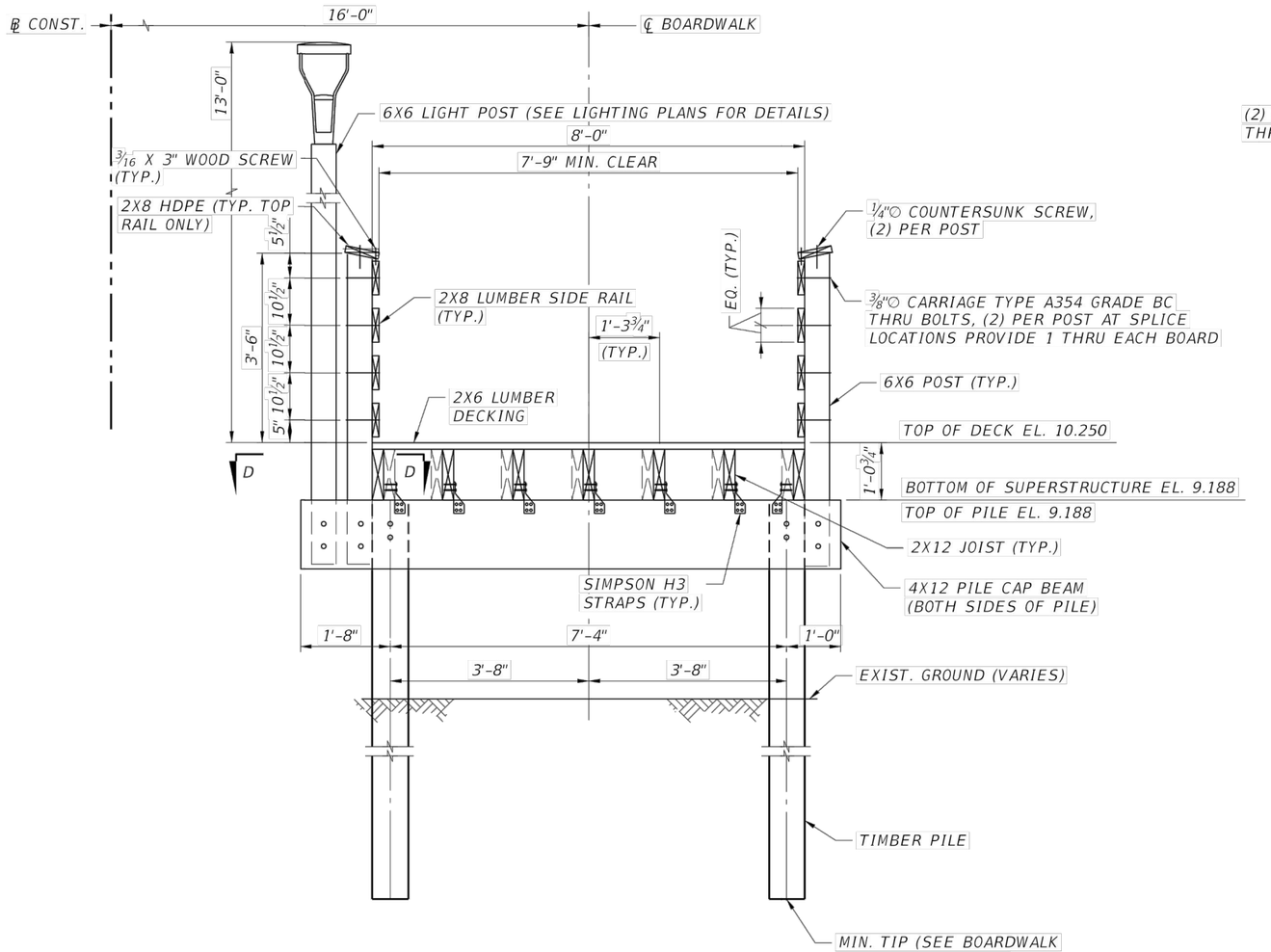

BENT-SECTION AT LIGHT LOCATIONS

(BENT NO. 2, 11, 19, 27, 35, 43, 50, 58 AND 66)

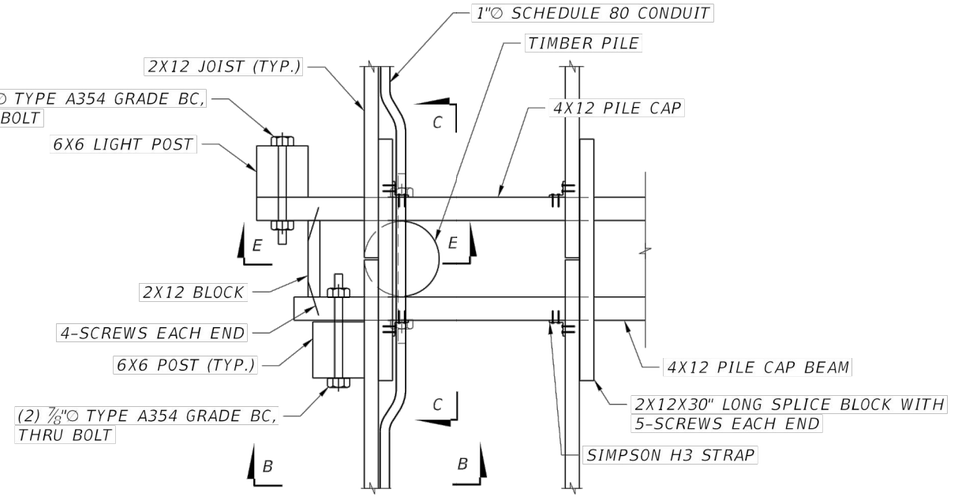

SECTION D-D

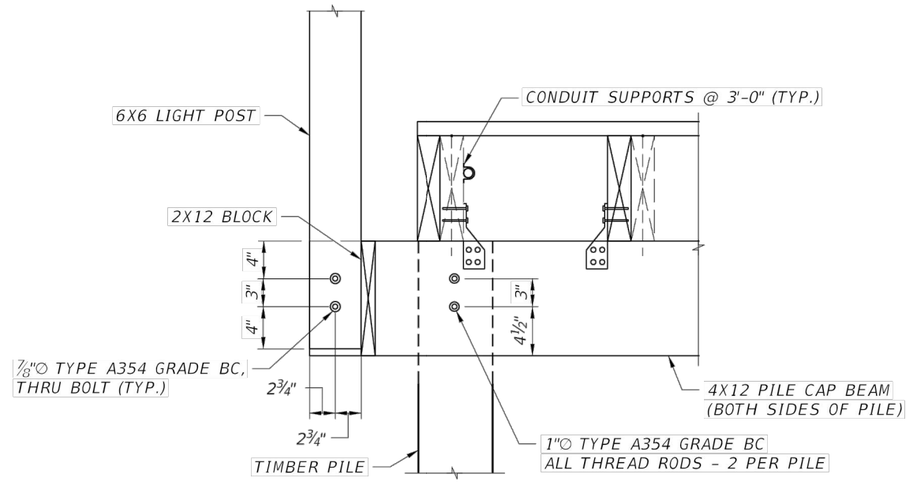

SECTION E-E

NOTES:

1. ALL HARDWARE SHOWN SHALL BE HOT-DIP GALVANIZED (HDG). SIMPSON CONNECTORS SHALL BE GALVANIZED OR ZMAX COATED.
2. SUBMIT DOCUMENTATION FOR ALTERNATIVE CONNECTORS FOR APPROVAL IF IT DIFFERS FROM THE CONNECTORS SHOWN IN THE PLANS.
3. FOR SECTIONS B-B AND C-C, SEE SHEET B1-03

REVISIONS	
DATE	DESCRIPTION

CITY OF PORT ORANGE
1000 CITY CENTER CIRCLE
PORT ORANGE, FL 32129

MARK NIEDERMANN, P.E.
P.E. LICENSE NUMBER 45957
FLORIDA BRIDGE & TRANSPORTATION, INC.
633 DARTMOUTH STREET
ORLANDO, FL 32804

SJR2C LOOP TRAIL
FROM SOUTH OF SELIN CIR TO HERBERT ST

ROAD	COUNTY	FINANCIAL PROJECT ID
SPRUCE CREEK RD	VOLUSIA	439865-3-54-01

BOARDWALK DETAILS (2 OF 3)

SHEET NO. B1-04

THE OFFICIAL RECORD OF THIS SHEET IS THE ELECTRONIC FILE DIGITALLY SIGNED AND SEALED UNDER RULE 61G15-23.004, F.A.C.

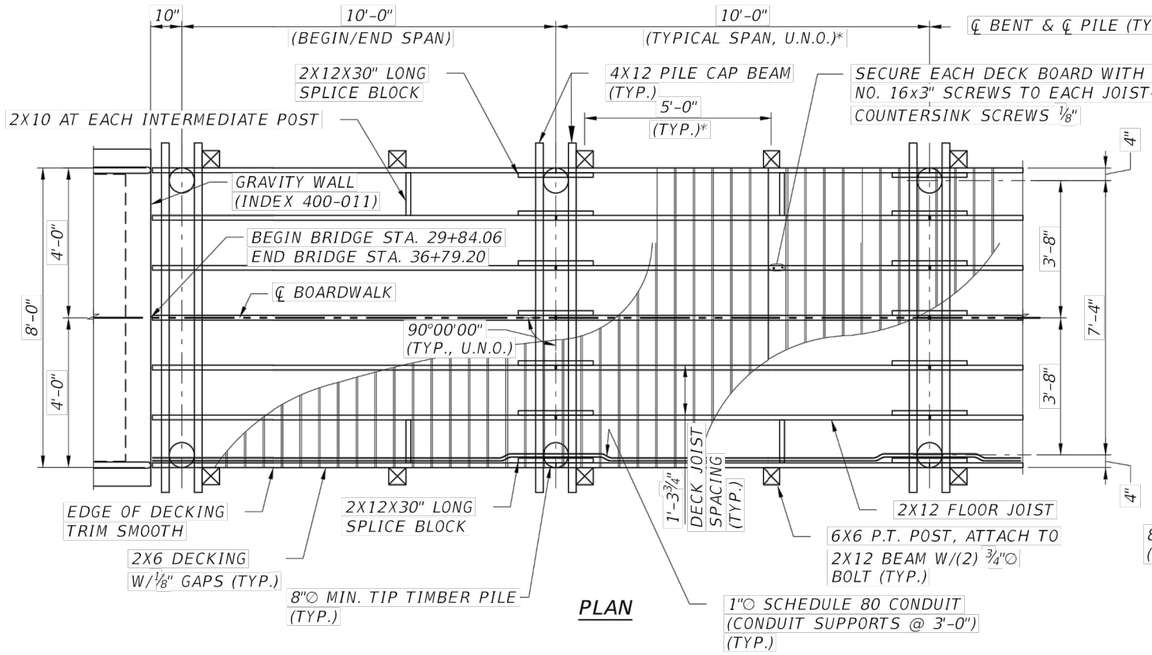

PLAN

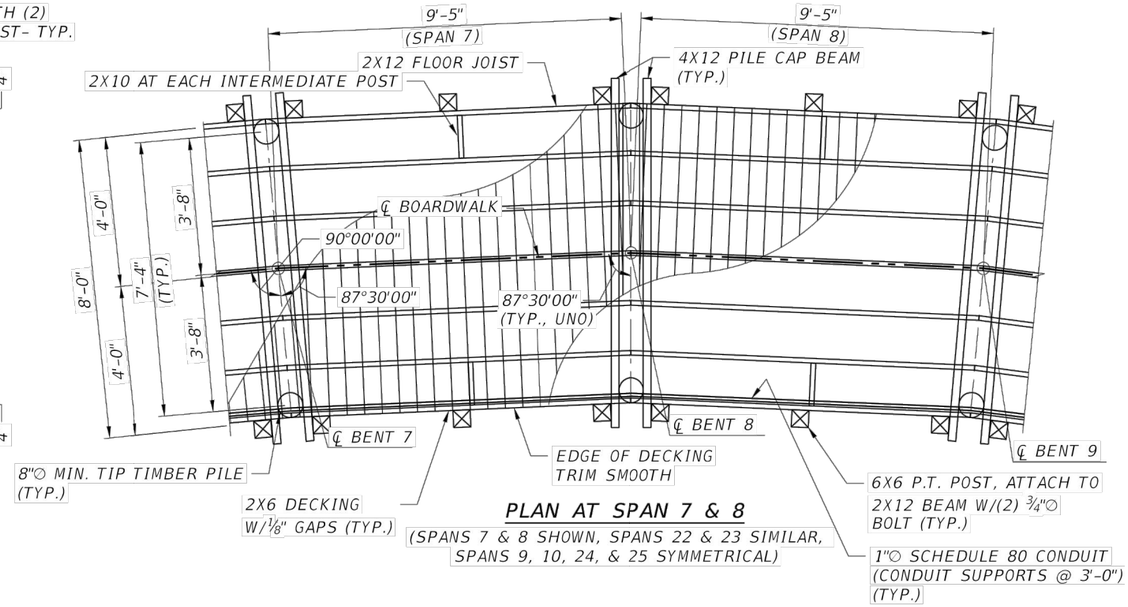

PLAN AT SPAN 7 & 8

(SPANS 7 & 8 SHOWN, SPANS 22 & 23 SIMILAR, SPANS 9, 10, 24, & 25 SYMMETRICAL)

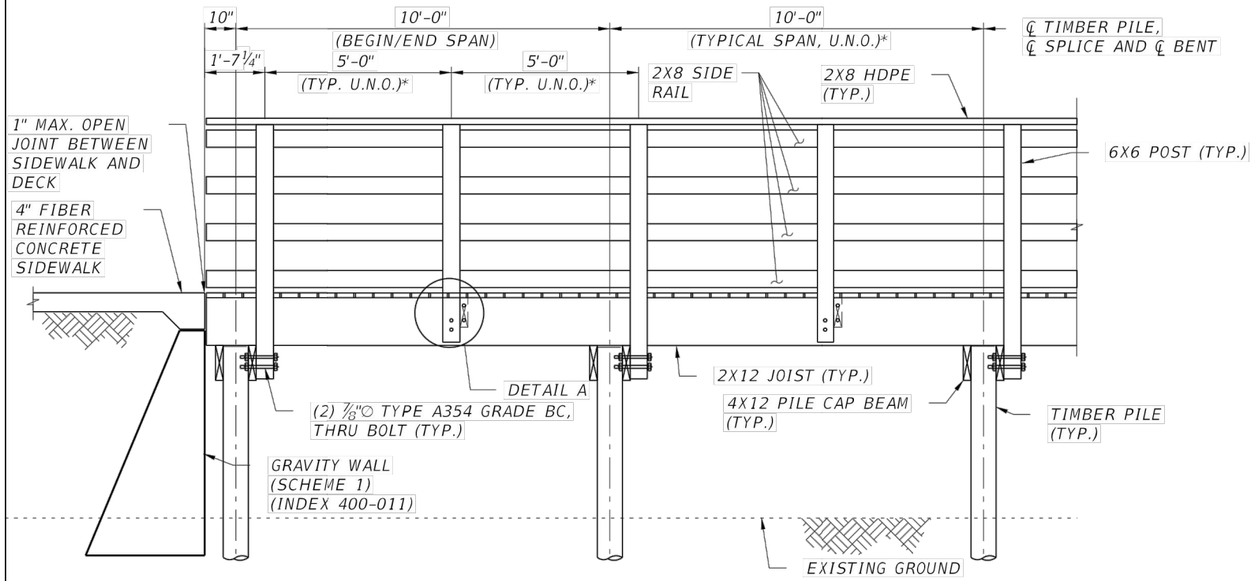

ELEVATION

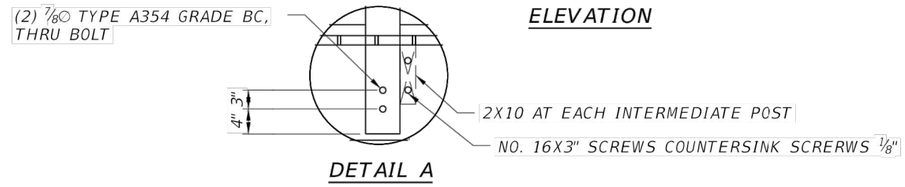

DETAIL A

*SEE BELOW FOR ADDITIONAL SPAN LENGTHS AND POST SPACINGS

SPAN	SPAN LENGTH (AT CL)	POST SPACING FROM PREVIOUS BENT
6	8'-2½"	4'-1¼"
21	9'-9⅞"	4'-11"
26	8'-10½"	4'-5¼"

REVISIONS	
DATE	DESCRIPTION

CITY OF PORT ORANGE
1000 CITY CENTER CIRCLE
PORT ORANGE, FL 32129

MARK NIEDERMANN, P.E.
P.E. LICENSE NUMBER 45957
FLORIDA BRIDGE & TRANSPORTATION, INC.
633 DARTMOUTH STREET
ORLANDO, FL 32804

SJR2C LOOP TRAIL
FROM SOUTH OF SELIN CIR TO HERBERT ST

ROAD	COUNTY	FINANCIAL PROJECT ID
SPRUCE CREEK RD	VOLUSIA	439865-3-54-01

BOARDWALK DETAILS (3 OF 3)

SHEET NO. B1-05

THE OFFICIAL RECORD OF THIS SHEET IS THE ELECTRONIC FILE DIGITALLY SIGNED AND SEALED UNDER RULE 61G15-23.004, F.A.C.

SJR2C LOOP TRAIL (SPRUCE CREEK RD)

FROM SOUTH OF SELIN CIRCLE TO HERBERT STREET

LIGHTING PLANS

FINANCIAL PROJECT ID: 439865-3-54-01
VOLUSIA COUNTY

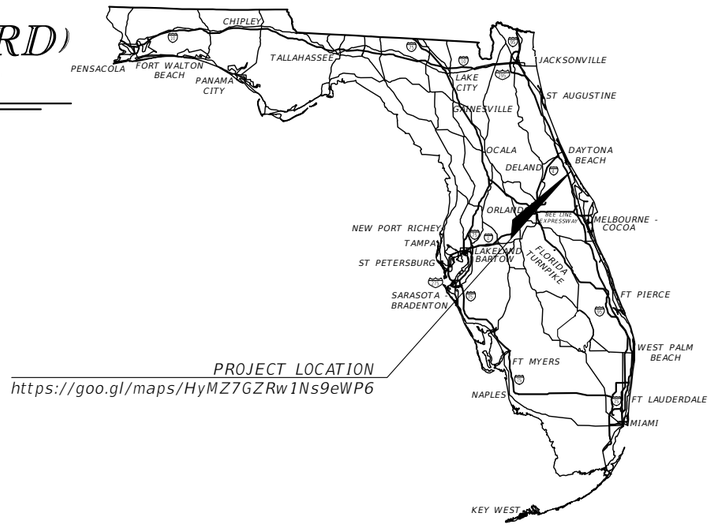

INDEX OF LIGHTING PLANS

SHEET NO.	SHEET DESCRIPTION
L-01	KEY SHEET
L-02	SIGNATURE SHEET
L-03	LIGHTING LEGEND
L-04	LIGHTING DATA TABLE
L-05 - L-09	LIGHTING PLAN SHEET
L-10	LIGHT POST DETAILS

GOVERNING STANDARD PLANS:
Florida Department of Transportation, FY2025-26 Standard plans for Road and Bridge Construction and applicable Interim Revisions (Irs).

Standard Plans for Road Construction and associated Irs are available at the following website:
http://www.fdot.gov/design/Standardplans.shtm

Standard Plans for Bridge Construction are included in the Roadway Plans Component.

GOVERNING STANDARD SPECIFICATIONS:
Florida Department of Transportation, FY2025-26 Standard Specifications for Road and Bridge Construction at the following website:
https://www.fdot.gov/programmanagement/specs.shtm

LIGHTING PLANS ENGINEER OF RECORD:

HANNAH E. NEWHARD, P.E.
P.E. NO.: 99625
STANLEY CONSULTANTS, INC.
80 SPRING VISTA DR
DEBARY FL, 32713

FISCAL YEAR	SHEET NO.
25	L-01

THE OFFICIAL RECORD OF THIS SHEET IS THE ELECTRONIC FILE DIGITALLY SIGNED AND SEALED UNDER RULE 61G15-23.004, F.A.C.

HANNAH E. NEWHARD
LICENSE
No.99625
STATE OF
FLORIDA
PROFESSIONAL ENGINEER

THIS DOCUMENT HAS BEEN DIGITALLY SIGNED AND SEALED BY:

Hannah E Newhard

Digitally signed by Hannah E Newhard
DN: CN=Hannah E Newhard, dnQualifier=A01410C000001925871 59A B0004D7A1, O=Unaffiliated, C=US
Date: 2025.05.20 13:38:12-07'00'

ON THE DATE ADJACENT TO THE SEAL

PRINTED COPIES OF THIS DOCUMENT ARE NOT CONSIDERED SIGNED AND SEALED AND THE SIGNATURE MUST BE VERIFIED ON ANY ELECTRONIC COPIES

STANLEY CONSULTANTS, INC.
80 SPRING VISTA DRIVE
DEBARY, FL 32713
HANNAH E. NEWHARD, P.E. NO. 99625

THE ABOVE NAMED PROFESSIONAL ENGINEER SHALL BE RESPONSIBLE FOR THE FOLLOWING SHEETS IN ACCORDANCE WITH RULE 61G15-23.004, F.A.C.

SHEET NO.	SHEET DESCRIPTION
L-01	KEY SHEET
L-02	SIGNATURE SHEET
L-03	LIGHTING LEGEND
L-04	LIGHTING DATA TABLE
L-05 - L-09	LIGHTING PLAN SHEET

MARK NIEDERMANN
LICENSE
No.45957
STATE OF
FLORIDA
PROFESSIONAL ENGINEER

THIS DOCUMENT HAS BEEN DIGITALLY SIGNED AND SEALED BY:

Mark Niedermann

Digitally signed by Mark Niedermann
DN: CN=Mark Niedermann, dnQualifier=A01410D000001954568227001BBF99, O=FLORIDA BRIDGE AND TRANSPORTATION, C=US
Date: 2025.05.20 15:28:30-04'00'

ON THE DATE ADJACENT TO THE SEAL

PRINTED COPIES OF THIS DOCUMENT ARE NOT CONSIDERED SIGNED AND SEALED AND THE SIGNATURE MUST BE VERIFIED ON ANY ELECTRONIC COPIES

FLORIDA BRIDGE & TRANSPORTATION, INC.
633 DARTMOUTH STREET
ORLANDO, FL 32804
MARK NIEDERMANN, P.E. NO. 45957

THE ABOVE NAMED PROFESSIONAL ENGINEER SHALL BE RESPONSIBLE FOR THE FOLLOWING SHEETS IN ACCORDANCE WITH RULE 61G15-23.004, F.A.C.

SHEET NO.	SHEET DESCRIPTION
L-10	LIGHT POST DETAILS

THE OFFICIAL RECORD OF THIS SHEET IS THE ELECTRONIC FILE DIGITALLY SIGNED AND SEALED UNDER RULE 61G15-23.004, F.A.C.

REVISIONS		
DATE	DESCRIPTION	

CITY OF PORT ORANGE
1000 CITY CENTER CIRCLE
PORT ORANGE, FL 32129

HANNAH E. NEWHARD, P.E.
P.E. LICENSE NUMBER 99625
STANLEY CONSULTANTS, INC.
80 SPRING VISTA DRIVE
DEBARY, FL 32713

SJR2C LOOP TRAIL
FROM SOUTH OF SELIN CIR TO HERBERT ST

ROAD	COUNTY	FINANCIAL PROJECT ID
SPRUCE CREEK RD	VOLUSIA	439865-3-54-01

SIGNATURE SHEET

SHEET NO. L-02

MIDBLOCK CROSSINGS
LIGHTING CRITERIA

(MID BLOCK CROSSING SPRUCE CREEK RD)
(SPRUCE CREEK RD & OAK ST)
(MID BLOCK CROSSING POWER AVE)
(MID BLOCK CROSSING AT HERBERT ST & 6TH ST)

Wind speed	140 mph
Vertical Illuminance	1.5 Std.Foot Candles

BOARDWALK
LIGHTING CRITERIA

(STA. 29+64.06 – 36+79.20)

Wind speed	140 mph
Average Initial Illumination	2.5 Std. Foot Candles
Uniformity Ratio Avg./Min.	4:1 or Less
Max./Min.	10:1 or Less

LEGEND

SYMBOLS	DESCRIPTION
	REPLACEMENT OF LUMINAIRE AND BRACKET ARM ON EXISTING UTILITY POLE (SEE LIGHTING DATA TABLE FOR INFORMATION)
	PROPOSED UTILITY LIGHT POLE (SEE LIGHTING DATA TABLE FOR INFORMATION)
	PROPOSED POST MOUNTED BOARDWALK LUMINAIRE ON 6"X6" WOOD POST AS DETAILED IN ROADWAY PLANS SHEET B1-04 (SEE SHEET L-10 FOR POLE 10 AND POLE 21)
	EXISTING UTILITY LIGHT TO REMAIN
	REMOVE LUMINAIRE AND BRACKET ARM ON EXISTING UTILITY POLE
	PROPOSED CONCRETE PEDESTAL WITH ELECTRICAL METER AND DISCONNECT
	PROPOSED LIGHTING PULL BOX
—•— — —• ——	PROPOSED OPEN TRENCH CONDUIT WITH CONDUCTORS INSIDE. RUN 2 – #6 CONDUCTORS AND #6 GROUND INSIDE CONDUIT.
—••— ••— •••—	PROPOSED BOARDWALK MOUNTED CONDUIT WITH CONDUCTORS INSIDE. RUN 2 – #6 CONDUCTORS AND #6 GROUND INSIDE CONDUIT.

THE OFFICIAL RECORD OF THIS SHEET IS THE ELECTRONIC FILE DIGITALLY SIGNED AND SEALED UNDER RULE 61G15-23.004, F.A.C.

REVISIONS	
DATE	DESCRIPTION

CITY OF PORT ORANGE
1000 CITY CENTER CIRCLE
PORT ORANGE, FL 32129

HANNAH E. NEWHARD, P.E.
P.E. LICENSE NUMBER 99625

STANLEY CONSULTANTS, INC.
80 SPRING VISTA DRIVE
DEBARY, FL 32713

SJR2C LOOP TRAIL
FROM SOUTH OF SELIN CIR TO HERBERT ST

ROAD	COUNTY	FINANCIAL PROJECT ID
SPRUCE CREEK RD	VOLUSIA	439865-3-54-01

LIGHTING LEGEND

SHEET NO. L-03

LIGHTING DATA TABLE

POLE NO.	LIGHT POLE COORDINATES (X,Y)	STATION / ROADWAY	OFFSET / SETBACK	LUMINAIRE MODEL	LUMEN OUTPUT	DISTRIBUTION TYPE	CCT	LUMINAIRE WATTAGE	NO. OF LUMINAIRES	SHIELDING	ARM LENGTH / MOUNTING HEIGHT	TILT (DEGREES)	POLE TYPE	POLE OWNER / MAINTAINING AGENCY	COLOR OF LUMINAIRE	DESCRIPTION OF WORK
MID BLOCK CROSSING SPRUCE CREEK RD																
1	657966.71,1745276.60	2+28	17.18 LT	ARCH-M-PA2-90-730-U-T3-HSS-93	10120	III	3000	93	1	HOUSE SIDE	6'	0	PROPOSED UTILITY POLE	FPL	GREY	INSTALL POLE, LUMINAIRE & ARM (UTILITY WORK)
		BL CONSTRUCTION	5' EOTL								29'			PORT ORANGE		
2	657930.47,1745371.00	3+29	31.91 LT	ARCH-M-PA2-90-730-U-T3-HSS-93	10120	III	3000	93	1	HOUSE SIDE	6'	0	PROPOSED UTILITY POLE	FPL	GREY	INSTALL POLE, LUMINAIRE & ARM (UTILITY WORK)
		BL CONSTRUCTION	19' EOTL								29'			PORT ORANGE		
SPRUCE CREEK RD & OAK ST																
3	657810.60,1745612.99	6+13	27.00 LT	7500 LUMENARCH-S-PA1-60-730	5447	III	3000	59	1	N/A	6'	0	PROPOSED UTILITY POLE	FPL	GREY	INSTALL POLE, LUMINAIRE & ARM (UTILITY WORK)
		BL CONSTRUCTION	15' EOTL								29'			PORT ORANGE		
4	657766.58,1745681.30	6+94	21.58 LT	7500 LUMENARCH-S-PA1-60-730	5447	III	3000	59	1	N/A	6'	0	EXISTING UTILITY POLE	FPL	GREY	REPLACE LUMINAIRE & ARM (UTILITY WORK)
		BL CONSTRUCTION	9' FOC								29'			PORT ORANGE		
5	657701.85,1745694.06	7+42	65.91 LT	7500 LUMENARCH-S-PA1-60-730	5447	III	3000	59	1	N/A	6'	0	PROPOSED UTILITY POLE	FPL	GREY	INSTALL POLE, LUMINAIRE, & ARM (UTILITY WORK)
		BL CONSTRUCTION	2' FOC								29'			PORT ORANGE		
6	657855.46,1745740.05	6+88	84.80 RT	7500 LUMENARCH-S-PA1-60-730	5447	III	3000	59	1	N/A	6'	0	EXISTING UTILITY POLE	FPL	GREY	REPLACE LUMINAIRE, & ARM (UTILITY WORK)
		BL CONSTRUCTION	6' FOC								29'			PORT ORANGE		
7	657681.36,1745785.94	8+28	27.54 LT	7500 LUMENARCH-S-PA1-60-730	5447	III	3000	59	1	N/A	6'	0	PROPOSED UTILITY POLE	FPL	GREY	INSTALL POLE, LUMINAIRE, & ARM (UTILITY WORK)
		BL CONSTRUCTION	33' EOTL								29'			PORT ORANGE		
MID BLOCK CROSSING POWERS AVE																
8	656832.64,1747162.66	24+51	21.05 RT	7500 LUMENARCH-S-PA1-60-730	5447	III	3000	59	1	N/A	6'	0	PROPOSED UTILITY POLE	FPL	GREY	INSTALL POLE, LUMINAIRE, & ARM (UTILITY WORK)
		BL CONSTRUCTION	4' BGR								29'			PORT ORANGE		
9	656906.65,1747204.17	24+61	105.59 RT	7500 LUMENARCH-S-PA1-60-730	5447	III	3000	59	1	N/A	6'	0	PROPOSED UTILITY POLE	FPL	GREY	INSTALL POLE, LUMINAIRE, & ARM (UTILITY WORK)
		BL CONSTRUCTION	5' EOTL								29'			PORT ORANGE		
BOARDWALK LIGHTING																
10	656661.47,1747622.17	29+85	24.87 RT	CLE17T4A-FGC-T1AHS-P10-30K	2432	I	3000	22.8	1	HOUSE SIDE	POST TOP	0	PROPOSED WOOD POST	PORT ORANGE	DARK BRONZE	INSTALL POST TOP LUMINAIRE ON WOOD POST
		BL CONSTRUCTION	N/A								13'			PORT ORANGE		
11	656619.10,1747662.83	30+43	21.04 RT	CLE17T4A-FGC-T1AHS-P10-30K	2432	I	3000	22.8	1	HOUSE SIDE	POST TOP	0	PROPOSED WOOD POST	PORT ORANGE	DARK BRONZE	INSTALL POST TOP LUMINAIRE ON WOOD POST
		BL CONSTRUCTION	N/A								13'			PORT ORANGE		
12	656588.33,1747720.68	31+16	20.88 RT	CLE17T4A-FGC-T1AHS-P10-30K	2432	I	3000	22.8	1	HOUSE SIDE	POST TOP	0	PROPOSED WOOD POST	PORT ORANGE	DARK BRONZE	INSTALL POST TOP LUMINAIRE ON WOOD POST
		BL CONSTRUCTION	N/A								13'			PORT ORANGE		
13	656565.39,1747776.12	31+76	20.82 RT	CLE17T4A-FGC-T1AHS-P10-30K	2432	I	3000	22.8	1	HOUSE SIDE	POST TOP	0	PROPOSED WOOD POST	PORT ORANGE	DARK BRONZE	INSTALL POST TOP LUMINAIRE ON WOOD POST
		BL CONSTRUCTION	N/A								13'			PORT ORANGE		
14	65655.0.08,1747838.32	32+48	21.17 RT	CLE17T4A-FGC-T1AHS-P10-30K	2432	I	3000	22.8	1	HOUSE SIDE	POST TOP	0	PROPOSED WOOD POST	PORT ORANGE	DARK BRONZE	INSTALL POST TOP LUMINAIRE ON WOOD POST
		BL CONSTRUCTION	N/A								13'			PORT ORANGE		
15	656547.13,1747908.25	33+18	21.19 RT	CLE17T4A-FGC-T1AHS-P10-30K	2432	I	3000	22.8	1	HOUSE SIDE	POST TOP	0	PROPOSED WOOD POST	PORT ORANGE	DARK BRONZE	INSTALL POST TOP LUMINAIRE ON WOOD POST
		BL CONSTRUCTION	N/A								13'			PORT ORANGE		
16	656544.19,1747978.19	33+88	21.22 RT	CLE17T4A-FGC-T1AHS-P10-30K	2432	I	3000	22.8	1	HOUSE SIDE	POST TOP	0	PROPOSED WOOD POST	PORT ORANGE	DARK BRONZE	INSTALL POST TOP LUMINAIRE ON WOOD POST
		BL CONSTRUCTION	N/A								13'			PORT ORANGE		
17	656541.24,1748048.13	34+58	21.24 RT	CLE17T4A-FGC-T1AHS-P10-30K	2432	I	3000	22.8	1	HOUSE SIDE	POST TOP	0	PROPOSED WOOD POST	PORT ORANGE	DARK BRONZE	INSTALL POST TOP LUMINAIRE ON WOOD POST
		BL CONSTRUCTION	N/A								13'			PORT ORANGE		
18	656538.29,1748118.07	35+28	21.26 RT	CLE17T4A-FGC-T1AHS-P10-30K	2432	I	3000	22.8	1	HOUSE SIDE	POST TOP	0	PROPOSED WOOD POST	PORT ORANGE	DARK BRONZE	INSTALL POST TOP LUMINAIRE ON WOOD POST
		BL CONSTRUCTION	N/A								13'			PORT ORANGE		
19	656535.65,1748188.02	35+98	21.58 RT	CLE17T4A-FGC-T1AHS-P10-30K	2432	I	3000	22.8	1	HOUSE SIDE	POST TOP	0	PROPOSED WOOD POST	PORT ORANGE	DARK BRONZE	INSTALL POST TOP LUMINAIRE ON WOOD POST
		BL CONSTRUCTION	N/A								13'			PORT ORANGE		
20	656532.42,1748257.94	36+68	21.33 RT	CLE17T4A-FGC-T1AHS-P10-30K	2432	I	3000	22.8	1	HOUSE SIDE	POST TOP	0	PROPOSED WOOD POST	PORT ORANGE	DARK BRONZE	INSTALL POST TOP LUMINAIRE ON WOOD POST
		BL CONSTRUCTION	N/A								13'			PORT ORANGE		
21	656521.98,1748314.90	37+26	13.31 RT	CLE17T4A-FGC-T1AHS-P10-30K	2432	I	3000	22.8	1	HOUSE SIDE	POST TOP	0	PROPOSED WOOD POST	PORT ORANGE	DARK BRONZE	INSTALL POST TOP LUMINAIRE ON WOOD POST
		BL CONSTRUCTION	N/A								13'			PORT ORANGE		
MID BLOCK CROSSING AT HERBERT ST & 6TH ST																
22	656523.95,1748342.75	37+53	16.53 RT	ARCH-N-PA1-40-730-U-T3-HSS-42	3631	III	3000	42	1	HOUSE SIDE	6'	0	EXISTING UTILITY POLE	FPL	GREY	REPLACE LUMINAIRE, & ARM (UTILITY WORK)
		BL CONSTRUCTION	8' EOTL								29'			PORT ORANGE		
23	656463.24,1748384.28	37+98	42.43 LT	ARCH-N-PA1-40-730-U-T3-HSS-42	3631	III	3000	42	1	HOUSE SIDE	6'	0	PROPOSED UTILITY POLE	FPL	GREY	INSTALL POLE, LUMINAIRE & ARM (UTILITY WORK)
		BL CONSTRUCTION	9' EOTL								29'			PORT ORANGE		

THE OFFICIAL RECORD OF THIS SHEET IS THE ELECTRONIC FILE DIGITALLY SIGNED AND SEALED UNDER RULE 61G15-23.004, F.A.C.

REVISIONS	
DATE	DESCRIPTION

CITY OF PORT ORANGE
1000 CITY CENTER CIRCLE
PORT ORANGE, FL 32129

HANNAH E. NEWHARD, P.E.
P.E. LICENSE NUMBER 99625

STANLEY CONSULTANTS, INC.
80 SPRING VISTA DRIVE
DEBARY, FL 32713

SJR2C LOOP TRAIL
FROM SOUTH OF SELIN CIR TO HERBERT ST

ROAD	COUNTY	FINANCIAL PROJECT ID
SPRUCE CREEK RD	VOLUSIA	439865-3-54-01

LIGHTING DATA TABLE

SHEET NO. L-04

Myers, Gabriela 5/20/2025 2:25:46 PM Myers, Gabriela Z:\2016 Projects\10962 (Port Orange)\TWO 09 - SUNTrail (SJR2C Loop) Spruce Creek Rd\CAD\439865\Lighting\PLDTLT01.dwg

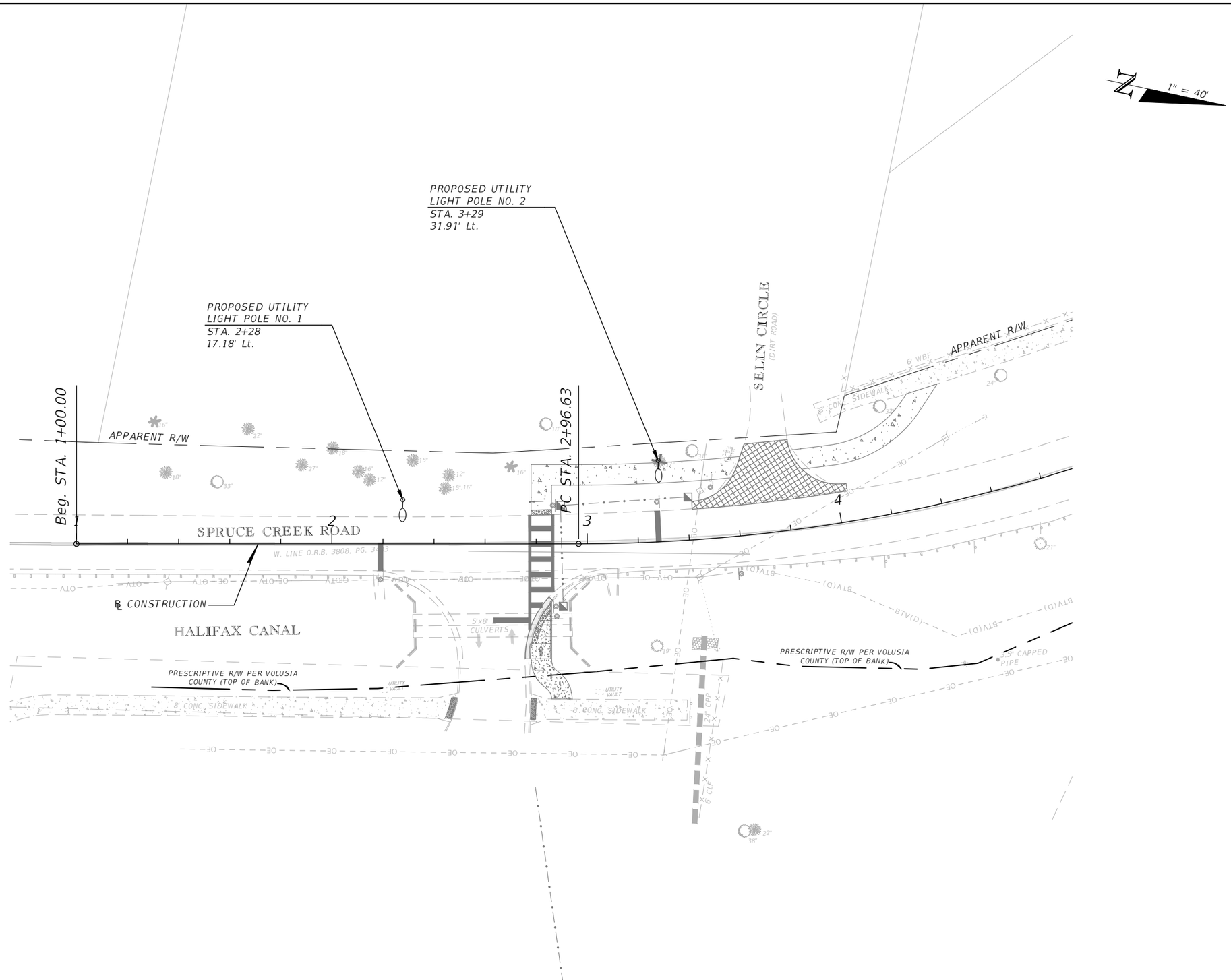

THE OFFICIAL RECORD OF THIS SHEET IS THE ELECTRONIC FILE DIGITALLY SIGNED AND SEALED UNDER RULE 61G15-23.004, F.A.C.

REVISIONS	
DATE	DESCRIPTION

CITY OF PORT ORANGE
1000 CITY CENTER CIRCLE
PORT ORANGE, FL 32129

HANNAH E. NEWHARD, P.E.
P.E. LICENSE NUMBER 99625

STANLEY CONSULTANTS, INC.
80 SPRING VISTA DRIVE
DEBARY, FL 32713

SJR2C LOOP TRAIL
FROM SOUTH OF SELIN CIR TO HERBERT ST

ROAD	COUNTY	FINANCIAL PROJECT ID
SPRUCE CREEK RD	VOLUSIA	439865-3-54-01

LIGHTING PLAN SHEET

SHEET NO. L-05

Myers, Gabriela 5/20/2025 2:26:17 PM Z:\2016 Projects\10962 (Port Orange)\TWO 09 - SUNTrail (SJR2C Loop) Spruce Creek Rd\CAD\439865\Lighting\PLANLT01.dwg

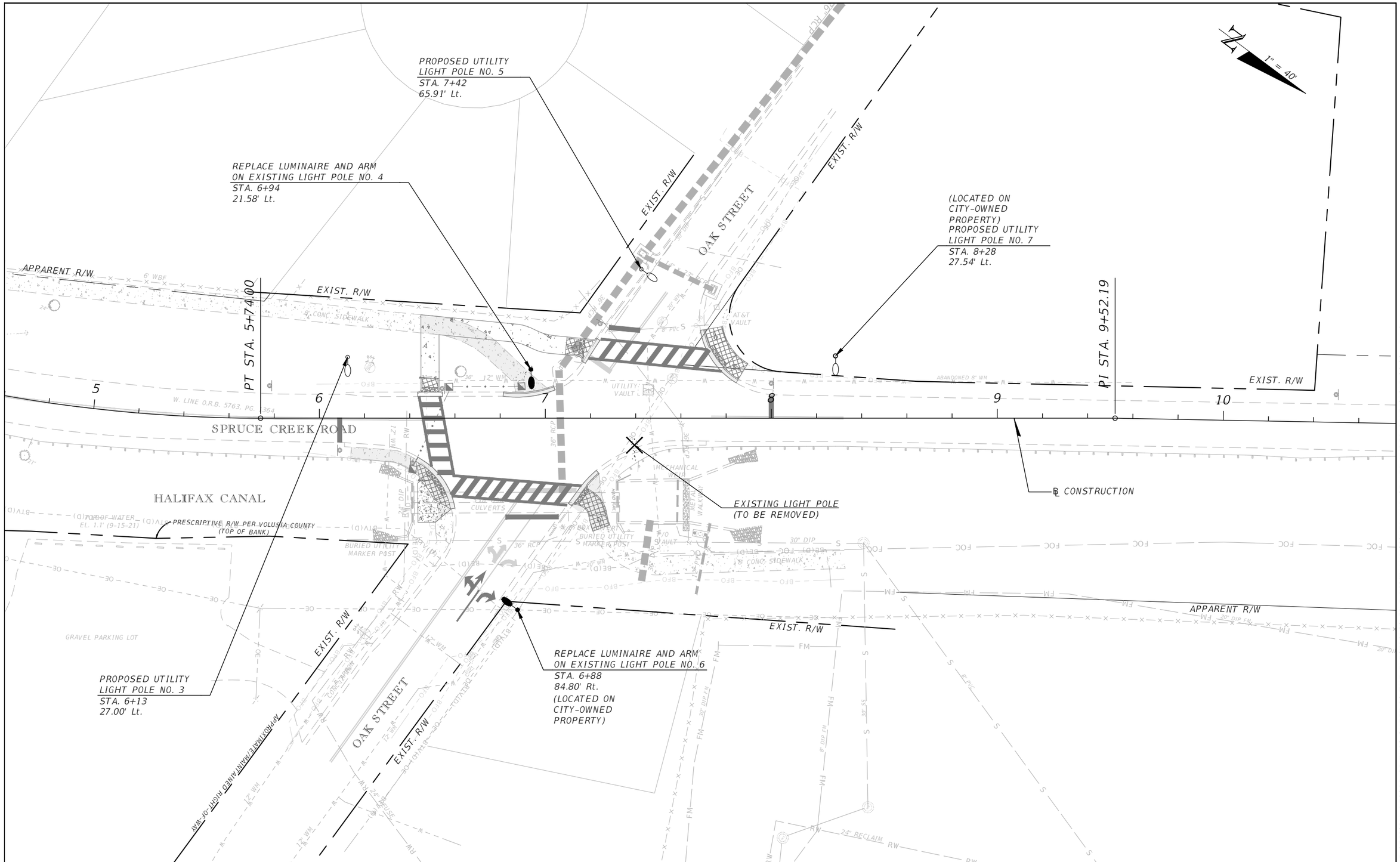

THE OFFICIAL RECORD OF THIS SHEET IS THE ELECTRONIC FILE DIGITALLY SIGNED AND SEALED UNDER RULE 61G15-23.004, F.A.C.

REVISIONS	
DATE	DESCRIPTION

CITY OF PORT ORANGE
1000 CITY CENTER CIRCLE
PORT ORANGE, FL 32129

HANNAH E. NEWHARD, P.E.
P.E. LICENSE NUMBER 99625
STANLEY CONSULTANTS, INC.
80 SPRING VISTA DRIVE
DEBARY, FL 32713

SJR2C LOOP TRAIL
FROM SOUTH OF SELIN CIR TO HERBERT ST

ROAD	COUNTY	FINANCIAL PROJECT ID
SPRUCE CREEK RD	VOLUSIA	439865-3-54-01

LIGHTING PLAN SHEET

SHEET NO.
L-06

Myers, Gabriela 5/20/2025 2:26:22 PM Z:\2016 Projects\10962 (Port Orange)\TWO 09 - SUNTrail (SJR2C Loop) Spruce Creek Rd\CAD\439865\Lighting\PLANLT01.dwg

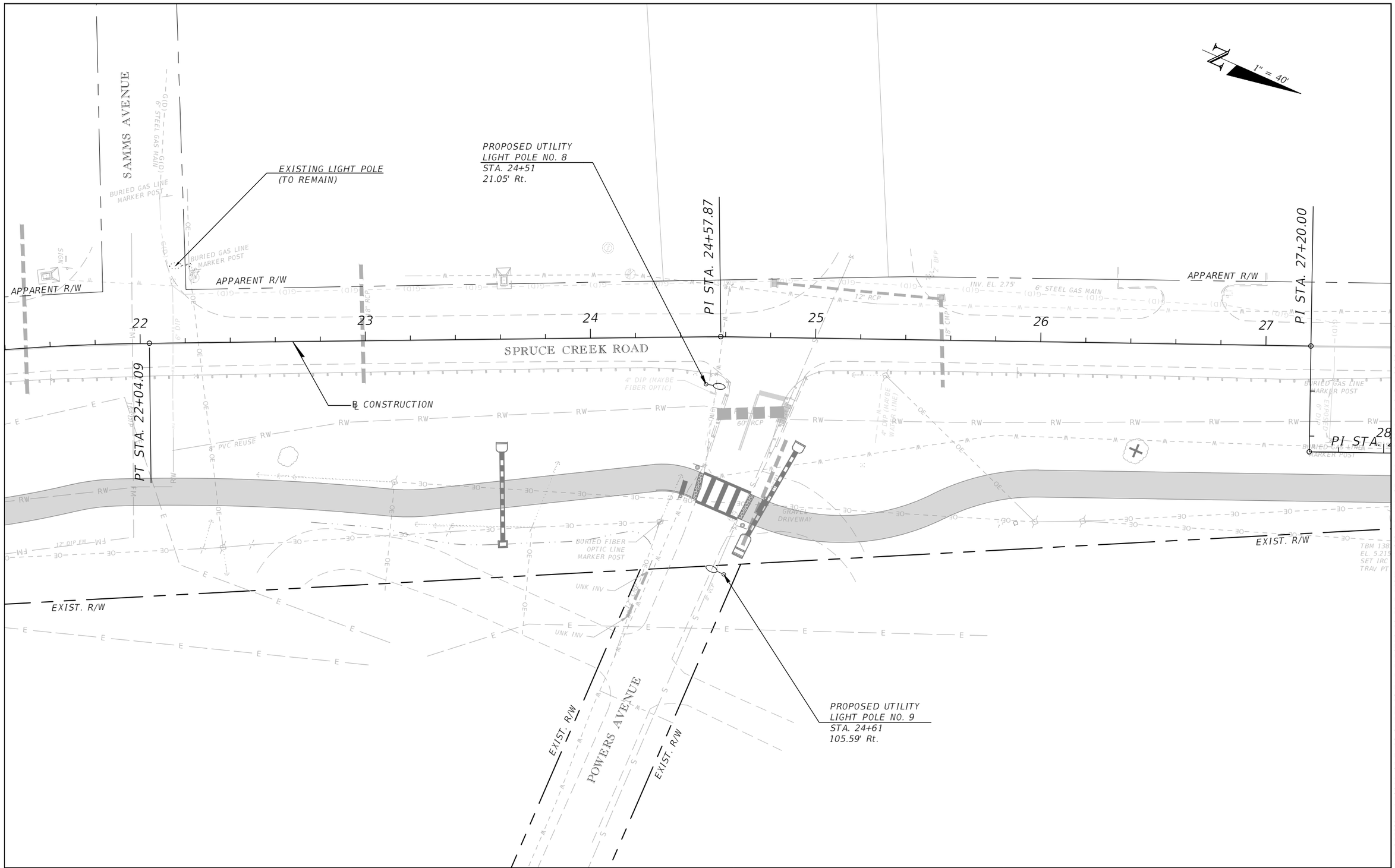

THE OFFICIAL RECORD OF THIS SHEET IS THE ELECTRONIC FILE DIGITALLY SIGNED AND SEALED UNDER RULE 61G15-23.004, F.A.C.

REVISIONS	
DATE	DESCRIPTION

CITY OF PORT ORANGE
1000 CITY CENTER CIRCLE
PORT ORANGE, FL 32129

HANNAH E. NEWHARD, P.E.
P.E. LICENSE NUMBER 99625

STANLEY CONSULTANTS, INC.
80 SPRING VISTA DRIVE
DEBARY, FL 32713

SJR2C LOOP TRAIL
FROM SOUTH OF SELIN CIR TO HERBERT ST

ROAD	COUNTY	FINANCIAL PROJECT ID
SPRUCE CREEK RD	VOLUSIA	439865-3-54-01

LIGHTING PLAN SHEET

SHEET NO. L-07

Myers, Gabriela 5/20/2025 2:26:27 PM Z:\2016 Projects\10962 (Port Orange)\TWO 09 – SUNTrail (SJR2C Loop) Spruce Creek Rd\CAD\439865\Lighting\PLANLT01.dwg

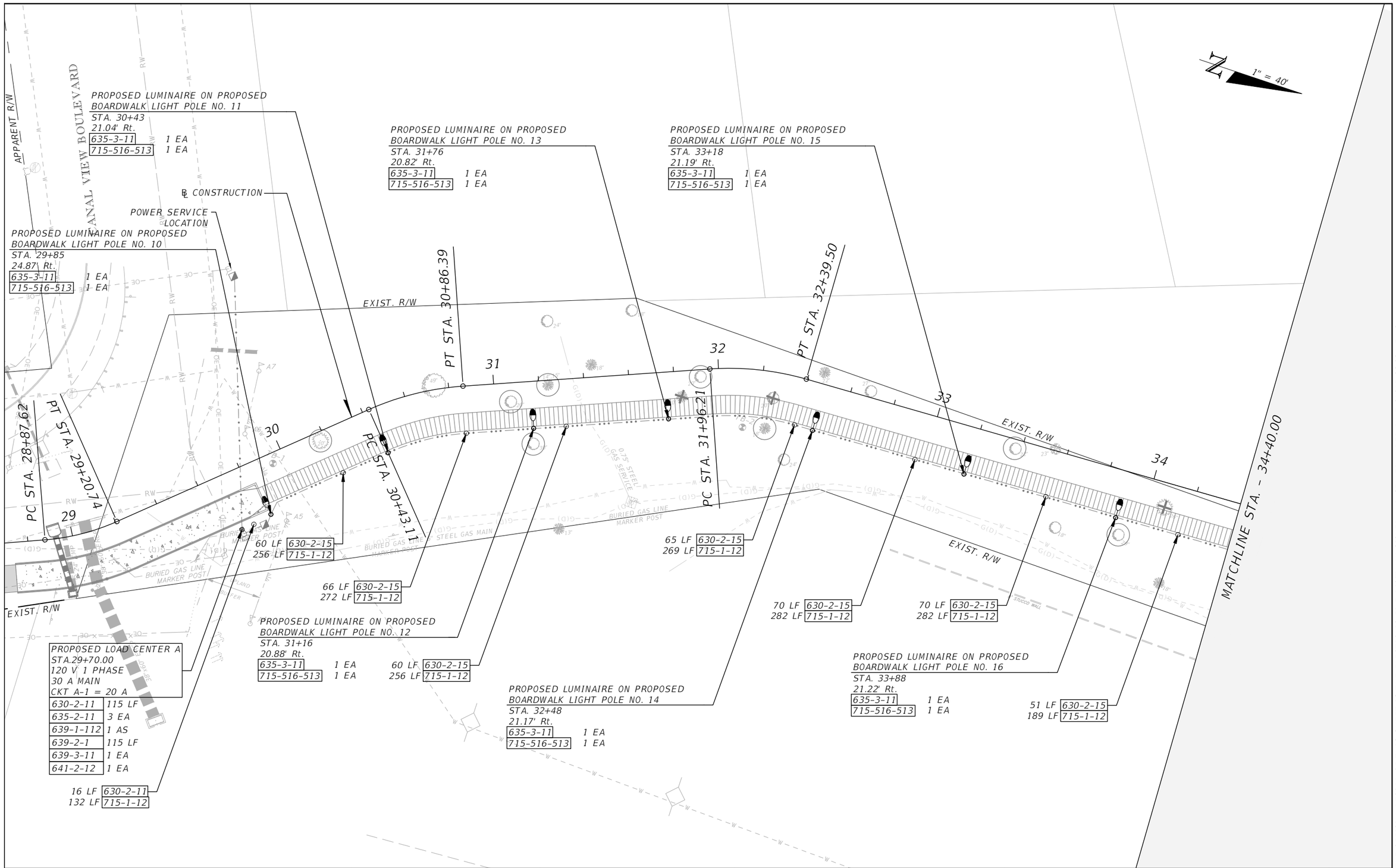

THE OFFICIAL RECORD OF THIS SHEET IS THE ELECTRONIC FILE DIGITALLY SIGNED AND SEALED UNDER RULE 61G15-23.004, F.A.C.

REVISIONS	
DATE	DESCRIPTION

CITY OF PORT ORANGE
1000 CITY CENTER CIRCLE
PORT ORANGE, FL 32129

HANNAH E. NEWHARD, P.E.
P.E. LICENSE NUMBER 99625

STANLEY CONSULTANTS, INC.
80 SPRING VISTA DRIVE
DEBARY, FL 32713

SJR2C LOOP TRAIL
FROM SOUTH OF SELIN CIR TO HERBERT ST

ROAD	COUNTY	FINANCIAL PROJECT ID
SPRUCE CREEK RD	VOLUSIA	439865-3-54-01

LIGHTING PLAN SHEET

SHEET NO. L-08

Myers, Gabriela 5/20/2025 2:26:32 PM Z:\2016 Projects\10962 (Port Orange)\TWO 09 - SUNTrail (SJR2C Loop) Spruce Creek Rd\CAD\439865\Lighting\PLANLT01.dwg

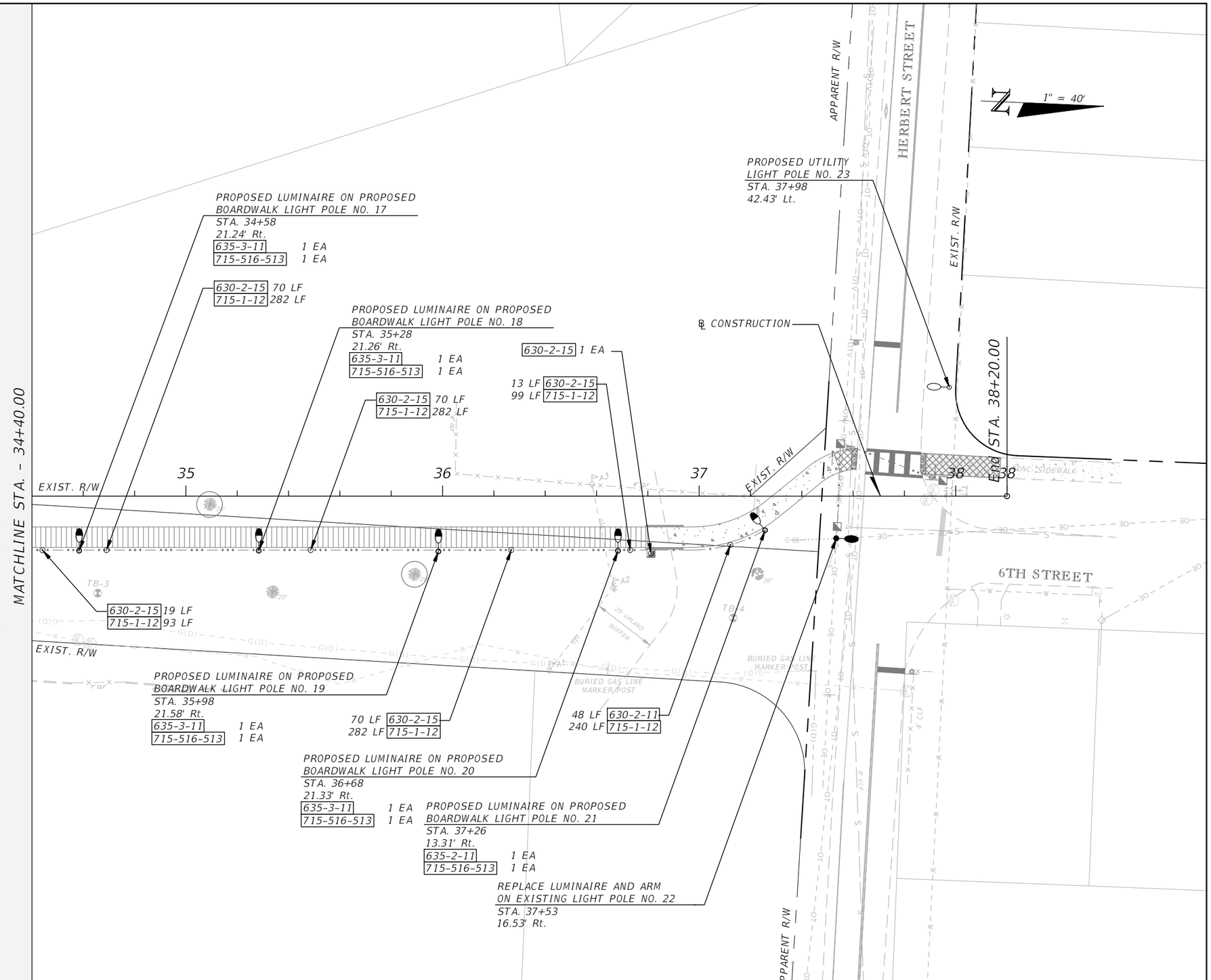

THE OFFICIAL RECORD OF THIS SHEET IS THE ELECTRONIC FILE DIGITALLY SIGNED AND SEALED UNDER RULE 61G15-23.004, F.A.C.

REVISIONS	
DATE	DESCRIPTION

CITY OF PORT ORANGE
1000 CITY CENTER CIRCLE
PORT ORANGE, FL 32129

HANNAH E. NEWHARD, P.E.
P.E. LICENSE NUMBER 99625

STANLEY CONSULTANTS, INC.
80 SPRING VISTA DRIVE
DEBARY, FL 32713

SJR2C LOOP TRAIL
FROM SOUTH OF SELIN CIR TO HERBERT ST

ROAD	COUNTY	FINANCIAL PROJECT ID
SPRUCE CREEK RD	VOLUSIA	439865-3-54-01

LIGHTING PLAN SHEET

SHEET NO.
L-09

Myers, Gabriela 5/20/2025 2:26:37 PM Z:\2016 Projects\10962 (Port Orange)\TWO 09 - SUNTrail (SJR2C Loop) Spruce Creek Rd\CAD\439865\Lighting\PLANLT01.dwg

GENERAL NOTES:

DESIGN SPECIFICATIONS:

1. LRFD BRIDGE DESIGN SPECIFICATIONS, 9TH EDITION.
2. LRFD SPECIFICATIONS FOR STRUCTURAL SUPPORTS FOR HIGHWAY SIGNS, LUMINARIES AND TRAFFIC SIGNALS, 1ST EDITION (2015) WITH 2017, 2018, 2019, AND 2020 INTERIMS (LRFD LTS-1).
3. FDOT MODIFICATIONS TO LRFD LTS-1, JANUARY 2024 EDITION.
4. FDOT DESIGN MANUAL, JANUARY 2024 EDITION.

LOCATIONS

SEE LIGHTING DATA TABLE SHEET

ENVIRONMENTAL CLASSIFICATION

CONCRETE: EXTREMELY AGGRESSIVE

DECORATIVE LIGHT POST CYLINDRICAL FOUNDATION NOTES:

1. THE COST OF THE FOOTING IS INCLUDED IN THE PAY ITEM NUMBER FOR LIGHT POLE.
2. THE FOUNDATIONS ARE BASED UPON THE FOLLOWING SOIL CRITERIA:
   - CLASSIFICATION = COHESIONLESS (FINE SAND)
   - FRICTION ANGLE = 29 DEGREES
   - EFFECTIVE UNIT WEIGHT = 45 PCF (ASSUMED SATURATED)
3. DESIGN WIND SPEED = 140 MPH.
4. DESIGN LOADS (FACTORED) NOT TO EXCEED:
   - MOMENT = 5.463 FT * KIP
   - TORSION = 0.0 FT * KIP
   - AXIAL = 0.421 KIP
   - SHEAR = 0.524 KIP
5. LIGHT POST MUST BE CUT, DRILLED AND FABRICATED PRIOR TO PRESSURE THREATMENT WITH PRESERVATIVES. TREAT IN ACCORDANCE WITH SPECIFICATION 955. LIGHT POST MUST BE SELECT STRUCTUREAL SOTHERN PINE FURNISHED PER THE REQUIREMENTS OF THE AMERICAN SOFTWOOD LUMBER STANDARDS, PS20-20

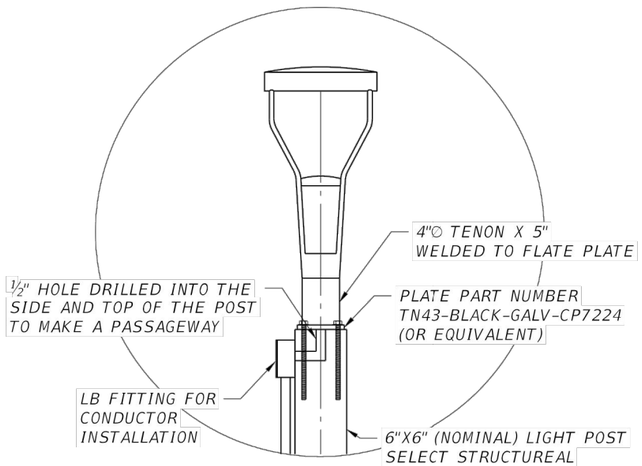

DETAIL A

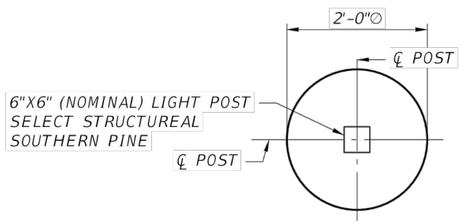

SECTION A-A

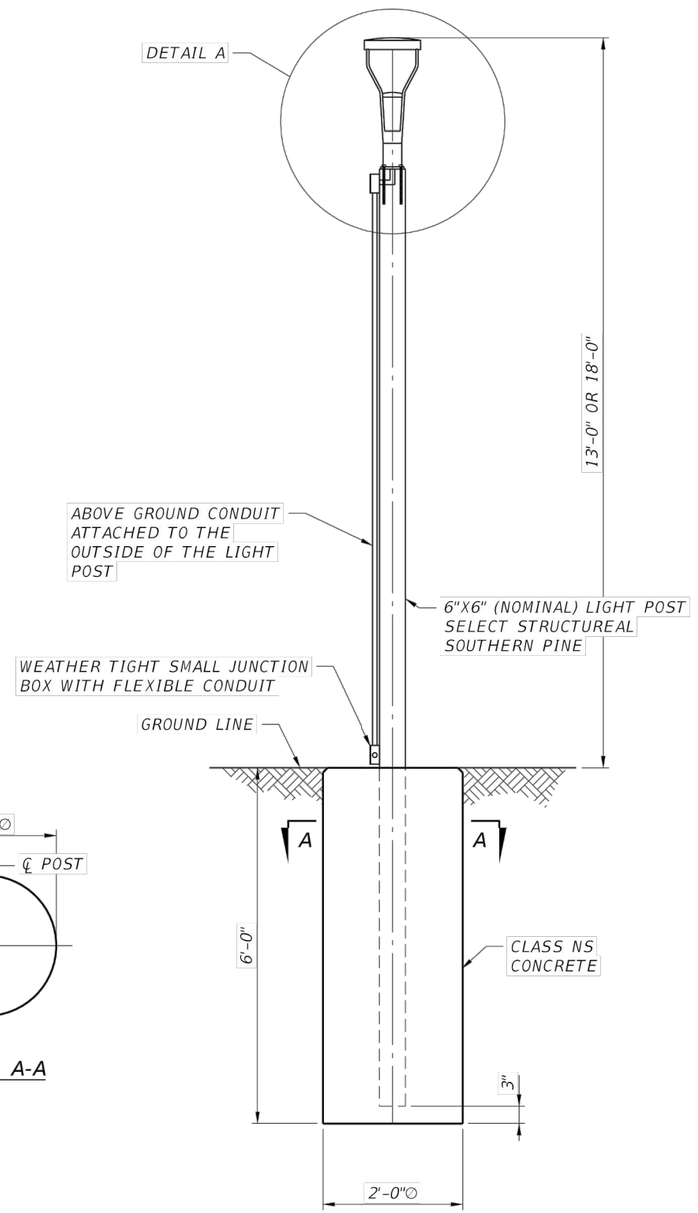

ELEVATION

THE OFFICIAL RECORD OF THIS SHEET IS THE ELECTRONIC FILE DIGITALLY SIGNED AND SEALED UNDER RULE 61G15-23.004, F.A.C.

REVISIONS	
DATE	DESCRIPTION

CITY OF PORT ORANGE
1000 CITY CENTER CIRCLE
PORT ORANGE, FL 32129

MARK NIEDERMANN, P.E.
P.E. LICENSE NUMBER 45957
FLORIDA BRIDGE & TRANSPORTATION, INC.
633 DARTMOUTH STREET
ORLANDO, FL 32804

SJR2C LOOP TRAIL
FROM SOUTH OF SELIN CIR TO HERBERT ST

ROAD	COUNTY	FINANCIAL PROJECT ID
SPRUCE CREEK RD	VOLUSIA	439865-3-54-01

LIGHT POST DETAILS

SHEET NO. L-10

TIMBER BOARDWALK
STRUCTURAL DESIGN CALCULATIONS

SJR2C LOOP TRAIL (SPRUCE CREEK RD)
FROM SOUTH OF SELIN CIRCLE TO HERBERT STREET

FPID: 439865-3-54-01

Prepared For:
CITY OF PORT ORANGE

Prepared By:
Florida Bridge and Transportation, Inc.
633 Dartmouth St.
Orlando, FL 32804
(407) 513-5709

April, 2025

Engineer of Record
Mark Niedermann, P.E.

TABLE OF CONTENTS

TIMBER BOARDWALK
STRUCTURAL DESIGN CALCULATIONS

SUN TRAIL BOARDWALK (SPRUCE CREEK ROAD)
CANAL VIEW BOULEVARD TO HERBERT STREET

SECTION	PAGE
TIMBER BOARDWALK CALCULATIONS	3
LIGHT POST CALCULATIONS	32
HDPE TECHNICAL DATA & AVAILABLE SIZES	48
TX TURF GATOR UTILITY VEHICLE SPECS	51
BRIDGE GEOMETRY	57
QUANTITIES	59

Engineer of Record:

Mark Niedermann
State of Florida, Professional Engineer
License No. 45957
Florida Bridge and Transportation, Inc.

This item has been digitally signed and sealed by

Mark Niedermann

Digitally signed by Mark Niedermann
DN: CN=Mark Niedermann, dnQualifier=A01410D00000195A456B027001BBF99, O=FLORIDA BRIDGE AND TRANSPORTATION, C=US
Date: 2025.04.17 10:55:27-04'00'

On the date adjacent to the seal
Printed copies of this document are not considered signed and sealed and the signature must be verified on any electronic copies.

TIMBER BOARDWALK CALCULATIONS

BOARDWALK ANALYSIS - In accordance with:

1) AASHTO LRFD Guide Specifications for the Design of Pedestrian Bridges - December 2009
2) AASHTO LRFD Bridge Design Specifications - 9th Edition - 2020

BOARDWALK DIMENSIONS

Width of Boardwalk: $W_{deck} := 8 \cdot ft$

Span Length: $L_{span} := 10 \cdot ft$

Number of Joists: $N_{joist} := 7$

Max Ht of Post: $H_{max} := 3.5 \cdot ft$

(Measured from top of deck)

X Bracing Ht: $H_{brace} := 4 \cdot ft$

(Measured from Ground To bottom of cap)

MEMBER SIZES

Member (Nom Size)	Horizontal Dimension	Vertical Dimension
DECK (2 x 6)	$b_{deck} := 5.5in$	$d_{deck} := 1.5 \cdot in$
RAIL (2 x 8)	$b_{rail} := 1.5 \cdot in$	$d_{rail} := 7.25 \cdot in$
HDPE RAIL TOP (2 x 8)	$b_{railtop} := 7.25 \cdot in$	$d_{railtop} := 1.5 \cdot in$

EFFECTIVE SIZES

[Ref 2 - LRFD 8.4.1.1.2]

POSTS (6 x 6 x 5'- 6")	$b_{post} := 5.5 \cdot in$	$d_{post} := 5.5 \cdot in$
JOIST (2 x 12)	$b_{joist} := 1.5 \cdot in$	$d_{joist} := 11.25 \cdot in$
CAP (4 x 12)	$b_{cap} := 3.5 \cdot in$	$d_{cap} := 11.25 \cdot in$
X BRACE (2 x 6)	$b_{xbrace} := 0 \cdot in$	$d_{xbrace} := 0 \cdot in$
PILE (8" dia)	$dia_{pile} := 8 \cdot in$	Tip

DESIGN LOADS

DEAD LOAD (WOOD)

$DL_{wood} := 50 \cdot pcf$

DEAD LOAD (HDPE) - Ref. Attached

$DL_{hdpe} := 47 \cdot pcf$

LIVE LOAD (3.1 and 3.2 - Ref 1 above)

Pedestrian Live Load

$LL_{ped} := 90 \cdot psf$

Vehicle Live Load

$LL_{veh} := 0.825 \cdot kip$

Only designed for a Gator Utility/Maintenance Vehicle (See attachments for calculation)

DECK

Design Span - Between Joists

$$Span_{deck} := \frac{W_{deck} - b_{joist}}{N_{joist} - 1} \qquad Span_{deck} = 1.313\,ft$$

Applied Distributed Load

Dead Load - DL

$w_{dldeck} := b_{deck} \cdot d_{deck} \cdot DL_{wood}$ $w_{dldeck} = 2.865 \cdot plf$

Pedestrian Live Load - LL

$w_{llpdeck} := LL_{ped} \cdot b_{deck}$ $w_{llpdeck} = 41.25 \cdot plf$

Applied Factored Moments and Shears

MOMENT

DL (4 span continuous)

$M_{dldeck} := 0.107 \cdot w_{dldeck} \cdot Span_{deck}^{2}$

$M_{dldeck} = 0.0005 \cdot kip \cdot ft$

LL (4 span continuous - Pedestrian)

$M_{lldeck} := 0.107 \cdot w_{llpdeck} \cdot Span_{deck}^{2}$

$M_{lldeck} = 0.008 \cdot kip \cdot ft$

LL (Gator TX Turf Utility Vehicle)

$M_{lvdeck} := \frac{(LL_{veh}\ Span_{deck})}{4}$

$M_{lvdeck} = 0.271 \cdot kip \cdot ft$

$M_{lldeck} := \max(M_{lldeck}, M_{lvdeck}) = 0.271 \cdot kip \cdot ft$

Applied Moment (Service)

$M_{deck} := M_{dldeck} + M_{lldeck}$ $M_{deck} = 0.271 \cdot kip \cdot ft$

Wood Properties and Design Values [Ref. 2 - LRFD 8.4.1.1.4-1 & 8.5.2.2]

ASTM D6109 - specify this requirement in plans

$F_b := 1000psi$ $E_o := 1.6 \cdot 10^{6} psi$ $F_{cpo} := 1550psi$ $\phi_b := 0.85$ $\phi_{cpo} := 0.90$ LRFD 8.5.2.2

Section Modulus For Deck

Centroid of Deck Section $C_{bottom} := \frac{d_{deck}}{2}$ $C_{bottom} = 0.75 \cdot in$

Moment of Intertia (Centroid) of Deck Section

$I_{deck} := \frac{1}{12} \cdot b_{deck} \cdot d_{deck}^{3}$

$I_{deck} = 1.547 \cdot in^{4}$

Section Modulus of Deck Section

$S_{deck} := \frac{I_{deck}}{C_{bottom}}$ $S_{deck} = 2.062 \cdot in^{3}$

Applicable Adjustment Factors [Ref 2 - LRFD 8.4.4]

Format Conversion Factor [8.4.4.2]

$C_{KF\_b} := \frac{2.5}{\phi_b}$ $C_{KF\_b} = 2.94$ For Bending

$C_{KF\_v} := C_{KF\_b}$ $C_{KF\_v} = 2.94$ For Shear

$C_M := 1.0$ Wet Service Factor [8.4.4.3]

$C_{iE} := 0.95$ Incising Factor [8.4.4.7] - Conserv.

$C_{ib} := 0.8$ Incising Factor [8.4.4.7] - Conserv.

$C_{iv} := 0.8$ Incising Factor [8.4.4.7] - Conserv.

$C_F := 1.0$ Size Factor [8.4.4.4]

$C_d := 1.0$ Deck Factor [8.4.4.8] - N/A

$C_{fu} := 1.0$ Flat Use Factor [8.4.4.6] - Load applied to narrow face- edgwise - N/A

$C_\lambda := 0.8$ Time Effect Factor [8.4.4.9] - (Strength 1)

Adjusted Design Values [Ref 2 - LRFD 8.4.4.1]

$F_b := F_b \cdot C_{KF\_b} \cdot C_M \cdot C_F \cdot C_\lambda \cdot C_{fu} \cdot C_{ib} \cdot C_d$ $F_b = 1882.4 \cdot psi$

$F_v := F_{cpo} \cdot C_{KF\_v} \cdot C_M \cdot C_\lambda \cdot C_{iv}$ $F_v = 2917.6 \cdot psi$

$E := E_o \cdot C_M \cdot C_{iE}$ $E = 1520000 \cdot psi$

Flexural Capacity [Ref 2 - LRFD 8.6.1]

$K_{bE} := 0.76$

$R_b := \min\left(50, \sqrt{\frac{Span_{deck} \cdot d_{deck}}{b_{deck}^2}}\right)$ $R_b = 0.9$

$F_{bE} := \frac{K_{bE} \cdot E}{R_b^2}$ $F_{bE} = 1479145 \cdot psi$

$A := \frac{F_{bE}}{F_b}$ $A = 785.796$

$C_L := \frac{1 + A}{1.9} - \sqrt{\frac{(1 + A)^2}{3.61} - \frac{A}{0.95}}$ $C_L = 1$

$M_r := \phi_b \cdot F_b \cdot S_{deck} \cdot C_L$ $M_r = 0.275 \cdot kip \cdot ft$ $M_{deck} = 0.271 \cdot kip \cdot ft$

$Check_1 := if(M_r > M_{deck}, "OK", "NG")$ $Check_1 = "OK"$

$M_r := S_{deck} \cdot F_b$ $M_r = 0.324 \cdot kip \cdot ft$ $M_{deck} = 0.271 \cdot kip \cdot ft$

$Check_2 := if(M_r > M_{deck}, "OK", "NG")$ $Check_2 = "OK"$

Check Deflection

$E_o = 1600000 \cdot psi$ AISC Beam Table 4 span continuous

$\Delta_d := \frac{0.0065 \cdot (w_{llpdeck}) \cdot Span_{deck}^4}{E_o \, I_{deck}}$ $\Delta_d = 0.0005555 \cdot in$

LL_{Limit} $\frac{Span_{deck}}{360} = 0.044 \cdot in$

$Check_3 := if\left(\Delta_d < \frac{Span_{deck}}{360}, "OK", "NG"\right)$ $Check_3 = "OK"$

DESIGN SUMMARY - 2"X6" DECKING GRADE NO. 1 SOUTHERN PINE

JOISTS

Design Span (Assume simple spans) - (Outside joist is comprised of half LL and half railing load, conserv. taken as all LL)

$Span_{joist} := L_{span} - dia_{pile}$ $Span_{joist} = 9.333\ ft$

Applied Distributed Load

Dead Load (simple span)

Live Load (simple span)

$w_{dldeck} := \frac{Span_{joist} \cdot d_{deck} \cdot Span_{deck} \cdot DL_{hdpe}}{Span_{joist}}$ $w_{dldeck} = 7.711 \cdot plf$

$w_{dljoist} := b_{joist} \cdot d_{joist} \cdot DL_{wood} + w_{dldeck}$ $w_{dljoist} = 13.57 \cdot plf$

$w_{llpjoist} := LL_{ped} \cdot Span_{deck}$ $w_{llpjoist} = 118.125 \cdot plf$

Applied Factored Moments and Shears

MOMENT

DL (simple span)

$M_{dljoist} := \frac{w_{dljoist} \cdot Span_{joist}^{2}}{8}$

$M_{dljoist} = 0.148 \cdot kip \cdot ft$

LL (simple span)

$M_{llpjoist} := \max\left(\frac{LL_{veh} \cdot Span_{joist}}{4}, \frac{w_{llpjoist} \cdot Span_{joist}^{2}}{8}\right)$

$M_{llpjoist} = 1.925 \cdot kip \cdot ft$

Factored Moment (Strength 1)

$M_{joist} := 1.25 \cdot M_{dljoist} + 1.75 \cdot M_{llpjoist}$ $M_{joist} = 3.553 \cdot kip \cdot ft$

SHEAR

DL (simple span)

$V_{dljoist} := 0.5 \cdot w_{dljoist} \cdot Span_{joist}$

$V_{dljoist} = 0.063 \cdot kip$

LL (simple span)

$V_{llpjoist} := 0.500 \cdot w_{llpjoist} \cdot Span_{joist}$

$V_{llpjoist} = 0.551 \cdot kip$

Factored Shear (Strength 1) - Table 3.4.1-1

$V_{joist} := 1.25 \cdot V_{dljoist} + 1.75 \cdot V_{llpjoist}$ $V_{joist} = 1.044 \cdot kip$

Wood Properties and Design Values [Ref. 2 - LRFD 8.4.1.1.4-1 & 8.5.2.2]

Grade No. 1 Southern Pine - 12 in. wide

$F_{bo} := 1000psi$ $F_{cpo} := 565psi$ $E_o := 1.6 \cdot 10^6 psi$

$\phi_b := 0.85$ $\phi_{cpo} := 0.9$ LRFD 8.5.2.2

Net Dimensions [8.4.1.1.2] Section Modulus For Joist

Centroid of Joist $C_{joist} := \frac{d_{joist}}{2}$ $C_{joist} = 5.625 \cdot in$

Moment of Intertia of Joist

$I_{joist} := \frac{1}{12} \cdot b_{joist} \cdot d_{joist}^3$

$I_{joist} = 177.979 \cdot in^4$

Section Modulus of Joist

$S_{joist} := \frac{I_{joist}}{C_{joist}}$ $S_{joist} = 31.641 \cdot in^3$

Applicable Adjustment Factors [Ref 2 - LRFD 8.4.4]

Format Conversion Factor [8.4.4.2]

$C_{KF\_b} := \frac{2.5}{\phi_b}$ $C_{KF\_b} = 2.94$ For Bending

$C_{KF\_v} := \frac{2.1}{\phi_{cpo}}$ $C_{KF\_v} = 2.33$ For Shear (Compression Perpendicular To Grain)

$C_M := 1.0$ Wet Service Factor [8.4.4.3]

$C_{iE} := 0.95$ Incising Factor [8.4.4.7] - Conserv.

$C_{ib} := 0.8$ Incising Factor [8.4.4.7] - Conserv.

$C_{iv} := 0.8$ Incising Factor [8.4.4.7] - Conserv.

$C_F := 1.0$ Size Factor [8.4.4.4]

$C_d := 1.0$ Deck Factor [8.4.4.8] - N/A

$C_{fu} := 1.0$ Flat Use Factor [8.4.4.6] - Load applied to narrow face- edgwise - N/A

$C_\lambda := 0.8$ Time Effect Factor [8.4.4.9] - (Strength 1)

Adjusted Design Values [Ref 2 - LRFD 8.4.4.1]

$F_b := F_{bo} \cdot C_{KF\_b} \cdot C_M \cdot C_F \cdot C_\lambda \cdot C_{fu} \cdot C_{ib} \cdot C_d$ $F_b = 1882.4 \cdot psi$

$F_v := F_{cpo} \cdot C_{KF\_v} \cdot C_M \cdot C_\lambda \cdot C_{iv}$ $F_v = 843.7 \cdot psi$

$E := E_o \cdot C_M \cdot C_{iE}$ $E = 1520000 \cdot psi$

Flexural Capacity [Ref 2 - LRFD 8.6.1]

$K_{bE} := 0.76$

$R_b := \min\left(50, \sqrt{\frac{Span_{joist} \cdot d_{joist}}{b_{joist}^2}}\right)$ $R_b = 23.7$

$F_{bE} := \frac{K_{bE} \cdot E}{R_b^2}$ $F_{bE} = 2062.9 \cdot psi$

$A := \frac{F_{bE}}{F_b}$ $A = 1.096$

$C_L := \frac{1 + A}{1.9} - \sqrt{\frac{(1 + A)^2}{3.61} - \frac{A}{0.95}}$ $C_L = 0.852$

$M_r := \phi_b \cdot F_b \cdot S_{joist} \cdot C_L$ $M_r = 3.593 \cdot kip \cdot ft$ $M_{joist} = 3.553 \cdot kip \cdot ft$

$Check_4 := if(M_r > M_{joist}, "OK", "NG")$ $Check_4 = "OK"$

Shear Capacity [LRFD 8.7]

$V_r := \frac{\phi_{cpo} \cdot F_v \cdot b_{joist} \cdot d_{joist}}{1.5}$ $V_r = 8.5 \cdot kip$ $V_{joist} = 1.044 \cdot kip$

$Check_5 := if(V_r < V_{joist}, "NG", "OK")$ $Check_5 = "OK"$

Check Deflection

$E_o = 1600000 \cdot psi$

$\Delta_j := \frac{5 \cdot (w_{llpjoist}) \cdot Span_{joist}^4}{384 E_o I_{joist}}$ AISC Beam Table simple span $\Delta_j = 0.071 \cdot in$

LL_{Limit} $\frac{Span_{joist}}{360} = 0.311 \cdot in$

$Check_6 := if\left[\frac{5 \cdot (w_{llpjoist}) \cdot Span_{joist}^4}{384 E_o I_{joist}} < \frac{Span_{joist}}{360}, "OK", "NG"\right]$ $Check_6 = "OK"$

DESIGN SUMMARY - USE GRADE NO. 1 SOUTHERN PINE - 2"X12" JOISTS

CAPS

Design Span (Assume simple spans)

Cap Length $L_{cap} := 9 \cdot ft + 4 \cdot in$

$Span_{cap} := L_{cap} - 2ft$ $Span_{cap} = 7.333\ ft$

Joist Reactions (Per Joist)

DL

$w_{dljoist} := b_{joist} \cdot d_{joist} \cdot DL_{wood}$ $w_{dljoist} = 5.859 \cdot plf$

$w_{dl.deck} := Span_{deck} \cdot DL_{hdpe} \cdot d_{deck}$ $w_{dl.deck} = 7.711 \cdot plf$

$w_{cap} := d_{cap} \cdot b_{cap} \cdot DL_{wood}$ $w_{cap} = 13.672 \cdot plf$

$R_{capdl} := \frac{(w_{dljoist} + w_{dl.deck}) \cdot L_{span}}{2}$ $R_{capdl} = 0.068 \cdot kip$

LL

$w_{lljoist} := Span_{deck} \cdot LL_{ped}$ $w_{lljoist} = 118.125 \cdot plf$

$R_{capll} := \frac{w_{lljoist} \cdot L_{span}}{2}$ $R_{capll} = 0.591 \cdot kip$

Factored Reactions (Strength 1)

$R_{joistcap} := 1.25 \cdot R_{capdl} + 1.75 \cdot R_{capll}$ $R_{joistcap} = 1.118 \cdot kip$

Applied Factored Moments and Shears

FACTORED MOMENT

$M_{cap} := 5.809 \cdot kip \cdot ft$ (FROM LARSA) $M_{cap} = 5.809 \cdot kip \cdot ft$

FACTORED SHEAR

$V_{cap} := 2.777 \cdot kip$ (FROM LARSA) $V_{cap} = 2.777 \cdot kip$

Wood Properties and Design Values [Ref. 2 - LRFD 8.4.1.1.4-1 & 8.5.2.2]

Grade 1 Southern Pine - 12 in wide

$F_{bo} := 1000psi$ $F_{cpo} := 565psi$ $E_o := 1.6 \cdot 10^6 psi$

$\phi_b := 0.85$ $\phi_{cpo} := 0.9$ LRFD 8.5.2.2

Net Dimensions [8.4.1.1.2] Section Modulus For Cap

Centroid of Cap $C_{cap} := \frac{d_{cap}}{2}$ $C_{cap} = 5.625 \cdot in$

Moment of Intertia of Cap

$$I_{cap} := \frac{1}{12} \cdot b_{cap} \cdot d_{cap}^3$$

$I_{cap} = 415.283 \cdot in^4$

Section Modulus of Cap Section

$$S_{cap} := \frac{I_{cap}}{C_{cap}} \qquad S_{cap} = 73.828 \cdot in^3$$

Applicable Adjustment Factors [Ref 2 - LRFD 8.4.4]

Format Conversion Factor [8.4.4.2]

$C_{KF\_b} := \frac{2.5}{\phi_b}$ $C_{KF\_b} = 2.94$ For Bending

$C_{KF\_v} := \frac{2.1}{\phi_{cpo}}$ $C_{KF\_v} = 2.33$ For Shear (Compression Perpendicular To Grain)

$C_M := 1.0$ Wet Service Factor [8.4.4.3]

$C_{iF} := 0.95$ Incising Factor [8.4.4.7] - Conserv.

$C_{ib} := 0.8$ Incising Factor [8.4.4.7] - Conserv.

$C_{iv} := 0.8$ Incising Factor [8.4.4.7] - Conserv.

$C_F := 1.0$ Size Factor [8.4.4.4]

$C_d := 1.0$ Deck Factor [8.4.4.8] - N/A

$C_{fu} := 1.0$ Flat Use Factor [8.4.4.6] - Load applied to narrow face- edgwise - N/A

$C_\lambda := 0.8$ Time Effect Factor [8.4.4.9] - (Strength 1)

Adjusted Design Values [Ref 2 - LRFD 8.4.4.1]

$F_b := F_{bo} \cdot C_{KF\_b} \cdot C_M \cdot C_F \cdot C_\lambda \cdot C_{fu} \cdot C_{ib} \cdot C_d$ $F_b = 1882.4 \cdot psi$

$F_v := F_{cpo} \cdot C_{KF\_v} \cdot C_M \cdot C_\lambda \cdot C_{iv}$ $F_v = 843.7 \cdot psi$

$E := E_o \cdot C_M \cdot C_{iE}$ $E = 1520000 \cdot psi$

Flexural Capacity [Ref 2 - LRFD 8.6.1]

$K_{bE} := 0.76$

$R_b := \min\left(50, \sqrt{\frac{Span_{cap} \cdot d_{cap}}{b_{cap}^2}}\right)$ $R_b = 9$

$F_{bE} := \frac{K_{bE} \cdot E}{R_b^2}$ $F_{bE} = 14294.1 \cdot psi$

$A := \frac{F_{bE}}{F_b}$ $A = 7.594$

$C_L := \frac{1 + A}{1.9} - \sqrt{\frac{(1 + A)^2}{3.61} - \frac{A}{0.95}}$ $C_L = 0.993$

$M_r := \phi_b \cdot S_{cap} \cdot F_b \cdot C_L$ $M_r = 9.77 \cdot kip \cdot ft$ $M_{cap} = 5.809 \cdot kip \cdot ft$

$Check_7 := if(M_r > M_{cap}, "OK", "NG")$ $Check_7 = "OK"$

Shear Capacity [LRFD 8.7]

$V_r := \frac{\phi_{cpo} \cdot F_v \cdot b_{cap} \cdot d_{cap}}{1.5}$ $V_r = 19.9 \cdot kip$ $V_{cap} = 2.777 \cdot kip$

$Check_8 := if(V_r < V_{cap}, "NG", "OK")$ $Check_8 = "OK"$

Check Deflection

$E_o = 1600000 \cdot psi$ AISC Beam Table simple span

$\Delta_c := \frac{5 \cdot \left[\frac{R_{joistcap} \cdot ((N_{joist} - 1))}{Span_{cap}}\right] \cdot Span_{cap}^4}{384 E_o I_{cap}}$ $\Delta_c = 0.09 \cdot in$

LL limit $\frac{Span_{cap}}{360} = 0.244 \cdot in$

$Check_9 := if\left[\frac{5 \cdot \left[\frac{R_{joistcap} \cdot ((N_{joist} - 1))}{Span_{cap}}\right] \cdot Span_{cap}^4}{384 E_o I_{cap}} < \frac{Span_{cap}}{360}, "OK", "NG"\right]$ $Check_9 = "OK"$

DESIGN SUMMARY - USE GRADE No. 1 SOUTHERN PINE - 4"X12" CAPS

TIMBER PILES AXIAL LOAD

Service Dead Load - Per Pile

Decking: $DL_{pilesdeck} := \frac{d_{deck} \cdot W_{deck} \cdot L_{span} \cdot DL_{hdpe}}{2}$ $DL_{pilesdeck} = 0.235 \cdot kip$

Joists: $DL_{pilesjoist} := \frac{b_{joist} \cdot d_{joist} \cdot N_{joist} \cdot L_{span} \cdot DL_{wood}}{2}$ $DL_{pilesjoist} = 0.205 \cdot kip$

Caps: $DL_{pilescap} := \frac{b_{cap} \cdot d_{cap} \cdot 2 \cdot L_{cap} \cdot DL_{wood}}{2}$ $DL_{pilescap} = 0.128 \cdot kip$

Bracing: $L_{brace} := 0 \cdot ft$

$DL_{pilesbrace} := \frac{b_{xbrace} \cdot d_{xbrace} \cdot 2 \cdot L_{brace} \cdot DL_{wood}}{2}$ $DL_{pilesbrace} = 0 \cdot kip$

Railing:

Railtop (2 x 8) $b_{railtop} = 7.25 \cdot in$ $d_{railtop} = 1.5 \cdot in$

Rail (2 x 8) $b_{rail} = 1.5 \cdot in$ $d_{rail} = 7.25 \cdot in$

No. of Rails $N_{rails} := 4$

Vertical posts (4 x 4) $b_{post} = 5.5 \cdot in$ $d_{post} = 5.5 \cdot in$

No. of vertical posts per Span & Ht: $N_{railpost} := 3$ $H_{max} = 3.5\ ft$

$DL_{pilesrail} := L_{span} \cdot DL_{hdpe} \cdot \left[\left(b_{railtop} \cdot d_{railtop} \right) + N_{rails} \cdot \left(b_{rail} \cdot d_{rail} \right) \right] + N_{railpost} \cdot b_{post} \cdot d_{post} \cdot H_{max} \cdot DL_{wood}$ $DL_{pilesrail} = 0.288 \cdot kip$

$DL_{lightpost} := 0.251 \cdot kip$ (see light post calculations)

Piles: $L_{pile} := 25 \cdot ft$ "Estimated"

$dia_{pile} = 8 \cdot in$ Avg diameter

$DL_{pile} := DL_{wood} \cdot \frac{\pi \cdot dia_{pile}^{2}}{4} \cdot L_{pile}$

$DL_{pile} = 0.436 \cdot kip$

Service Dead Load:

$DL_{piles} := DL_{pilesdeck} + DL_{pilesjoist} + DL_{pilescap} + DL_{pilesbrace} + DL_{pilesrail} + DL_{pile} + DL_{lightpost}$

Service Live Load:

$LL_{piles} := LL_{ped} \cdot \frac{W_{deck} \cdot L_{span}}{2}$

$DL_{piles} = 1.54 \cdot kip$ $LL_{piles} = 3.6 \cdot kip$

$Pile_{service} := DL_{piles} + LL_{piles} = 5.143 \cdot kip$ Per LARSA Run = 4.393 kip Say Confirmed $Pile_{service} = 2.57 \cdot tons$

Factored Pile Axial Load (Strength 1)

$Pile_{factored} := 1.25 \cdot DL_{piles} + 1.75 \cdot LL_{piles} = 8.228 \cdot kip$ Per LARSA Run = 7.19 kip Say Confirmed $Pile_{factored} = 4.11 \cdot tons$

TIMBER PILE DESIGN

Wood Properties and Design Values [Ref. 2 - LRFD 8.4.1.4]

Grade 1 Southern Pine - Table 8.4.1.1-1

$F_{bo} := 2400psi$ $F_{co} := 1200psi$ $E_o := 1.5 \cdot 10^6 psi$

$\phi_b := 0.85$ $\phi_c := 0.9$ LRFD 8.5.2.2 For driving resistance $\phi_c = 1.15$ based on short load durations

Applicable Adjustment Factors [Ref 2 - LRFD 8.4.4]

Format Conversion Factor [8.4.4.2]

$C_{KF\_b} := \frac{2.5}{\phi_b}$ $C_{KF\_b} = 2.94$ For Bending

$C_{KF\_c} := \frac{2.1}{\phi_c}$ $C_{KF\_c} = 2.33$ For Compression Parallel To Grain

$C_M := 1.0$ Wet Service Factor [8.4.4.3]

$C_{iE} := 0.95$ Incising Factor [8.4.4.7] - Conserv.

$C_{ib} := 0.8$ Incising Factor [8.4.4.7] - Conserv.

$C_{ic} := 0.8$ Incising Factor [8.4.4.7] - Conserv.

$C_F := 1.0$ Size Factor [8.4.4.4]

$C_d := 1.0$ Deck Factor [8.4.4.8] - N/A

$C_{fu} := 1.0$ Flat Use Factor [8.4.4.6] - Load applied to narrow face- edgwise - N/A

$C_\lambda := 0.8$ Time Effect Factor [8.4.4.9] - (Strength 1)

Adjusted Design Values [Ref 2 - LRFD 8.4.4.1]

$F_b := F_{bo} \cdot C_{KF\_b} \cdot C_M \cdot C_F \cdot C_\lambda \cdot C_{fu} \cdot C_{ib} \cdot C_d$ $F_b = 4517.6 \cdot psi$

$F_c := F_{co} \cdot C_{KF\_c} \cdot C_M \cdot C_\lambda \cdot C_{ic}$ $F_c = 1792 \cdot psi$

$E := E_o \cdot C_M \cdot C_{iE}$ $E = 1425000 \cdot psi$

Compressive Capacity [Ref 2 - LRFD 8.8.1]

$K_{cE} := 0.52$ Visually graded lumber

$c_{pile} := 0.85$ Round timber piles

$K := 2$ Effective Length Factor

$L := 10.ft$ Max Unsupported Height

$L_e := K \cdot L$ $L_e = 20\,ft$

$$F_{cE} := \frac{K_{cE} \cdot E \cdot dia_{pile}^{2}}{L_e^{2}} \qquad F_{cE} = 823.3 \cdot psi \qquad B := \frac{F_{cE}}{F_c} \qquad B = 0.459$$

$$C_p := \frac{1 + B}{2 \cdot c_{pile}} - \sqrt{\left(\frac{1 + B}{2 \cdot c_{pile}}\right)^2 - \frac{B}{c_{pile}}} \qquad C_p = 0.415$$

$$A_g := \frac{\pi \cdot dia_{pile}^{2}}{4} \qquad A_g = 50.3 \cdot in^2 \qquad P_u := Pile_{factored} = 8.2 \cdot kip$$

$$P_r := \phi_c \cdot F_c \cdot A_g \cdot C_p \qquad P_r = 33.661 \cdot kip$$

Flexural Capacity [Ref 2 - LRFD 8.6.3]

Moment of Intertia of Pile

$$I_{pile} := \frac{\pi \cdot dia_{pile}^{4}}{64}$$

$$I_{pile} = 201.1 \cdot in^4$$

Section Modulus of Pile Section

$$S_{pile} := \frac{\pi \cdot dia_{pile}^{3}}{32} \qquad S_{pile} = 50.265 \cdot in^3$$

$$M_r := \phi_b \cdot F_b \cdot S_{pile} \qquad M_r = 16.085 \cdot kip \cdot ft$$

$$M_u := Pile_{factored} \cdot \Delta_c \qquad M_u = 0.061 \cdot kip \cdot ft$$

Combined Flexure and Compression Parallel to Grain Capacity [Ref 2 - LRFD 8.10.2]

$$\left(\frac{P_u}{P_r}\right)^2 + \frac{M_u}{M_r \cdot \left(1 - \frac{P_u}{F_{cE} \cdot A_g}\right)} = 0.065$$

$$Check_{10} := if\left[\left(\frac{P_u}{P_r}\right)^2 + \frac{M_u}{M_r \cdot \left(1 - \frac{P_u}{F_{cE} \cdot A_g}\right)} < 1.0, "OK", "NG"\right] \qquad Check_{10} = "OK"$$

DESIGN SUMMARY - USE GRADE No. 1 SOUTHERN PINE - 8" Ave. Dia. Piles

RAILING

Design Span

$Span_{rail} := 5 \cdot ft$

Applied Distributed Load

LL

Pedestrian distributed load (LRFD 13.8.2) $w_{llrail} := 50 \cdot plf$

Pedestrian concentrated load (LRFD 13.8.2) $P_{llrail} := 200 \cdot lbf$

MOMENT

LL

pedestrian distributed load moment $M_{llrail1} := \frac{w_{llrail} \cdot Span_{rail}^{2}}{8}$

$M_{llrail1} = 0.156 \cdot kip \cdot ft$

pedestrian concentrated load moment $M_{llrail2} := \frac{P_{llrail} \cdot Span_{rail}}{4}$

$M_{llrail2} = 0.25 \cdot kip \cdot ft$

Total LL moment: $M_{llrail} := M_{llrail1} + M_{llrail2}$

$M_{llrail} = 0.41 \cdot kip \cdot ft$

Factored Moment (Strength 1)

$M_{rail} := M_{llrail}$ $M_{rail} = 0.406 \cdot kip \cdot ft$

HDPE Design Values [Ref. - Attached]

ASTM D6109 - specify this requirement in plans - See attached for properties required for top and side rails

$F_b := 1200psi$ $E_o := 1.14 \cdot 10^{5} psi$

Net Dimension

Moment of Intertia Top Rail

$I_{railtop\_X} := \frac{1}{12} \cdot b_{railtop} \cdot d_{railtop}^{3}$ $I_{railtop\_X} = 2.039 \cdot in^{4}$ Section Modulus of Top Rail and side rails

$I_{railtop\_Y} := \frac{1}{12} \cdot d_{railtop} \cdot b_{railtop}^{3}$ $I_{railtop\_Y} = 47.635 \cdot in^{4}$ Section Modulus of Top Rail and side rails

$I_{railtop\_X} = 2.039 \cdot in^4$ $C_{railtop\_X} := \frac{d_{railtop}}{2}$ $C_{railtop\_X} = 0.75 \cdot in$ $S_{railtop\_X} := \frac{I_{railtop\_X}}{C_{railtop\_X}}$ $S_{railtop\_X} = 2.719 \cdot in^3$

$I_{railtop\_Y} = 47.635 \cdot in^4$ $C_{railtop\_Y} := \frac{b_{railtop}}{2}$ $C_{railtop\_Y} = 3.625 \cdot in$ $S_{railtop\_Y} := \frac{I_{railtop\_Y}}{C_{railtop\_Y}}$ $S_{railtop\_Y} = 13.141 \cdot in^3$

Flexural Capacity

$M_{r\_X} := S_{railtop\_X} \cdot F_b$ $M_{r\_X} = 0.27 \cdot kip \cdot ft$ $M_{rail} = 0.406 \cdot kip \cdot ft$

$M_{r\_Y} := S_{railtop\_Y} \cdot F_b$ $M_{r\_Y} = 1.314 \cdot kip \cdot ft$

$Check_{11} := if\left(\frac{M_{llrail1}}{M_{r\_X}} < 1.0 \wedge \frac{M_{rail}}{M_{r\_Y}} < 1.0, "OK", "NG"\right)$ $Check_{11} = "OK"$

RAILING POSTS

Design Span (Assume simple spans)

Design Length $L_{post} := H_{max} + d_{joist} + \frac{d_{cap}}{2} + d_{deck}$ $L_{post} = 5.03\ ft$

Pedestrian distributed load (LRFD 13.8.2) $w_{llrail} := 50 \cdot plf$

Pedestrian concentrated load (LRFD 13.8.2) $P_{llrail} := 200 \cdot lbf$

Applied Factored Moments and Shears

Service Moment

$M_{post} := w_{llrail} \cdot \frac{Span_{rail}}{2} \cdot (H_{max}) + \frac{P_{llrail}}{2} \cdot (H_{max})$ $M_{post} = 0.788\ ft \cdot kip$

Service Shear

$V_{post} := w_{llrail} \cdot \frac{Span_{rail}}{2} + \frac{P_{llrail}}{2}$ $V_{post} = 0.225 \cdot kip$

FACTORED MOMENT

$M_{post} := 1.75 \cdot M_{post}$ $M_{post} = 1.378 \cdot kip \cdot ft$

FACTORED SHEAR

$V_{post} := 1.75 \cdot V_{post}$ $V_{post} = 0.394 \cdot kip$

Wood Properties and Design Values [Ref. 2 - LRFD 8.4.1.1.4-1 & 8.5.2.2]

Grade 1 Southern Pine - 6 in wide

$F_{bo} := 1350psi$ $F_{cpo} := 565psi$ $E_o := 1.6 \cdot 10^6 psi$

$\phi_b := 0.85$ $\phi_{cpo} := 0.9$ LRFD 8.5.2.2

Net Dimensions [8.4.1.1.2] Section Modulus For Post

Centroid of Post $C_{post} := \frac{d_{post}}{2}$ $C_{cap} = 5.625 \cdot in$

Moment of Intertia of Post

$I_{post} := \frac{1}{12} \cdot b_{post} \cdot d_{post}^3$

$I_{post} = 76.255 \cdot in^4$

Section Modulus of Post Section

$S_{post} := \frac{I_{post}}{C_{post}}$ $S_{post} = 27.729 \cdot in^3$

Applicable Adjustment Factors [Ref 2 - LRFD 8.4.4]

Format Conversion Factor [8.4.4.2]

$C_{KF\_b} := \frac{2.5}{\phi_b}$ $C_{KF\_b} = 2.94$ For Bending

$C_{KF\_v} := \frac{2.1}{\phi_{cpo}}$ $C_{KF\_v} = 2.33$ For Shear (Compression Perpendicular To Grain)

$C_M := 1.0$ Wet Service Factor [8.4.4.3]

$C_{iE} := 0.95$ Incising Factor [8.4.4.7] - Conserv.

$C_{ib} := 0.8$ Incising Factor [8.4.4.7] - Conserv.

$C_{iv} := 0.8$ Incising Factor [8.4.4.7] - Conserv.

$C_F := 1.0$ Size Factor [8.4.4.4]

$C_d := 1.0$ Deck Factor [8.4.4.8] - N/A

$C_{fu} := 1.0$ Flat Use Factor [8.4.4.6] - Load applied to narrow face- edgwise - N/A

$C_\lambda := 0.8$ Time Effect Factor [8.4.4.9] - (Strength 1)

Adjusted Design Values [Ref 2 - LRFD 8.4.4.1]

$F_b := F_{bo} \cdot C_{KF\_b} \cdot C_M \cdot C_F \cdot C_\lambda \cdot C_{fu} \cdot C_{ib} \cdot C_d$ $F_b = 2541.2 \cdot psi$

$F_v := F_{cpo} \cdot C_{KF\_v} \cdot C_M \cdot C_\lambda \cdot C_{iv}$ $F_v = 843.7 \cdot psi$

$E := E_o \cdot C_M \cdot C_{iE}$ $E = 1520000 \cdot psi$

Flexural Capacity [Ref 2 - LRFD 8.6.1]

$K_{bE} := 0.76$ $R_b := \min\left(50, \sqrt{\frac{L_{post} \cdot d_{post}}{b_{post}^2}}\right)$ $R_b = 3.3$

$F_{bE} := \frac{K_{bE} \cdot E}{R_b^2}$ $F_{bE} = 105236 \cdot psi$ $A := \frac{F_{bE}}{F_b}$ $A = 41.412$

$$C_L := \frac{1 + A}{1.9} - \sqrt{\frac{(1 + A)^2}{3.61} - \frac{A}{0.95}}$$ $C_L = 0.999$

$M_r := \phi_b \cdot S_{post} \cdot F_b \cdot C_L$ $M_r = 4.985 \cdot kip \cdot ft$ $M_{post} = 1.378 \cdot kip \cdot ft$

$Check_{12} := if(M_r > M_{post}, "OK", "NG")$ $Check_{12} = "OK"$

Shear Capacity [LRFD 8.7]

$V_r := \frac{\phi_{cpo} \cdot F_v \cdot b_{post} \cdot d_{post}}{1.5}$ $V_r = 15.3 \cdot kip$ $V_{post} = 0.394 \cdot kip$

$Check_{13} := if(V_r < V_{post}, "NG", "OK")$ $Check_{13} = "OK"$

Check Deflection

$E_o = 1600000 \cdot psi$ AISC Beam Table simple span

$\Delta_p := \frac{V_{post} \cdot L_{post}^3}{3 \cdot E_o I_{post}}$ $\Delta_p = 0.237 \cdot in$

LL limit $\frac{L_{post}}{120} = 0.503 \cdot in$

$Check_{14} := if\left(\frac{V_{post} \cdot L_{post}^3}{3 \cdot E_o I_{post}} < \frac{L_{post}}{120}, "OK", "NG"\right)$ $Check_{14} = "OK"$

DESIGN SUMMARY - USE GRADE No. 1 SOUTHERN PINE - 6" x 6" RAILING POSTS

BOLT CHECK (Bolt at Cap controls)

Connections use a 1" Diameter A354 Grade BC Threaded rods for connections from cap to pile

1" Properties

$A_{bolt} := 0.606 \cdot in^2$

$f_y := 109 \cdot ksi$ $f_u := 120 \cdot ksi$

$D_{eff} := \sqrt{\frac{A_{bolt}}{\pi} \cdot 4} = 0.878 \cdot in$

$S_{rod} := \frac{\pi \cdot D_{eff}^3}{32} = 0.067 \cdot in^3$

Loads and factors

$Cap_{load} := \frac{Pile_{factored}}{2} = 4.114 \cdot kip$ Due to 2 caps

$\phi_s := 0.80$

$\phi_t := 0.80$

Factored Shear Resistance of Bolts (threads excluded in Shear Plane) (6.13.2.7-1)

$R_{shear} := \phi_s \cdot 0.56 \cdot A_{bolt} \cdot f_u = 32.579 \cdot kip$

Check the Bolt Shear Resistance

$$Check_{15} := \begin{cases} \text{"OK"} & \text{if } Cap_{load} < R_{shear} \\ \text{"FAILS IN SHEAR"} & \text{otherwise} \end{cases}$$

$Check_{15} = \text{"OK"}$

Stresses

$$\sigma_{tension} := \frac{\left(\frac{Cap_{load}}{2} \cdot \frac{b_{cap}}{2}\right)}{S_{rod}} = 54.103 \cdot ksi$$

Cap load divided by 2 for 2 bolts

Check the Bolt Tension

$$Check_{16} := \begin{cases} \text{"OK"} & \text{if } \sigma_{tension} < 0.9 f_y \\ \text{"FAILS IN TENSION"} & \text{otherwise} \end{cases}$$

$\frac{\sigma_{tension}}{f_y} = 0.496$

$Check_{16} = \text{"OK"}$

Factored Tensile Resistance of Bolt under combined Tension and Shear (6.13.2.11-1 & 6.13.2.11-2)

$$R_n := \frac{R_{shear}}{\phi_s}$$

Nominal shear resistance

$$T_n := \begin{cases} \phi_t \cdot 0.76 \cdot A_{bolt} \cdot f_u & \text{if } \frac{Cap_{load}}{R_n} \le 0.33 \\ \left[\phi_t \cdot 0.76 \cdot A_{bolt} \cdot f_u \cdot \sqrt{1 - \left(\frac{Cap_{load}}{\phi_s \cdot R_n}\right)^2}\right] & \text{otherwise} \end{cases}$$

$T_n = 44.214 \cdot kip$

Check the Bolt Resistance under Combined Tension and Shear

$$T_u := \sigma_{tension} \cdot A_{bolt} = 32.787 \cdot kip$$

$$Check_{17} := \begin{cases} \text{"OK"} & \text{if } T_u < T_n \\ \text{"FAILS COMB. TENS. \& SHEAR"} & \text{otherwise} \end{cases}$$

$Check_{17} = \text{"OK"}$

WET WEIGHT = 1400 LB
PAYLOAD = 1646 LB

3046 LB / 4 WHEELS = 762LB

USE 825 LB (8% INCREASE)

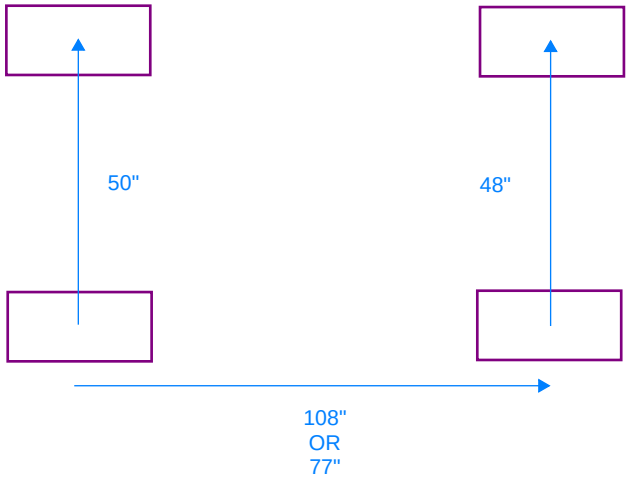

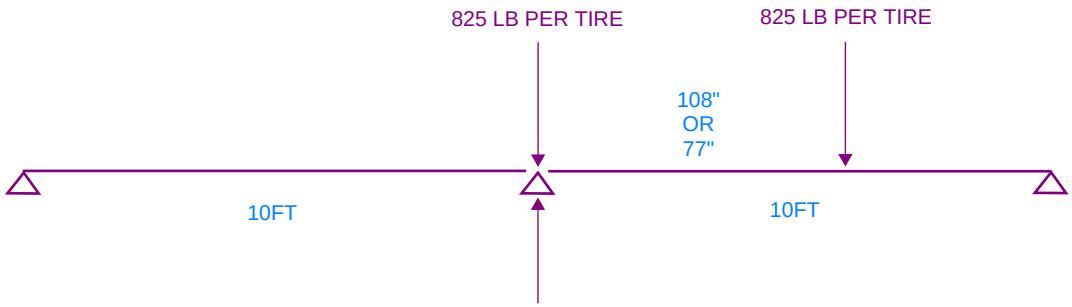

825 + 825 X (10FT - 77"/12) / 10FT = 1120 LB (use this as is a bit conservative for joist design)

825 + 825 X (10FT - 108"/12) / 10FT = 908 LB

LOAD INPUTS FOR LARSA MODEL FOR CAP DESIGN AND TIMBER PILE LOAD VERIFICATION

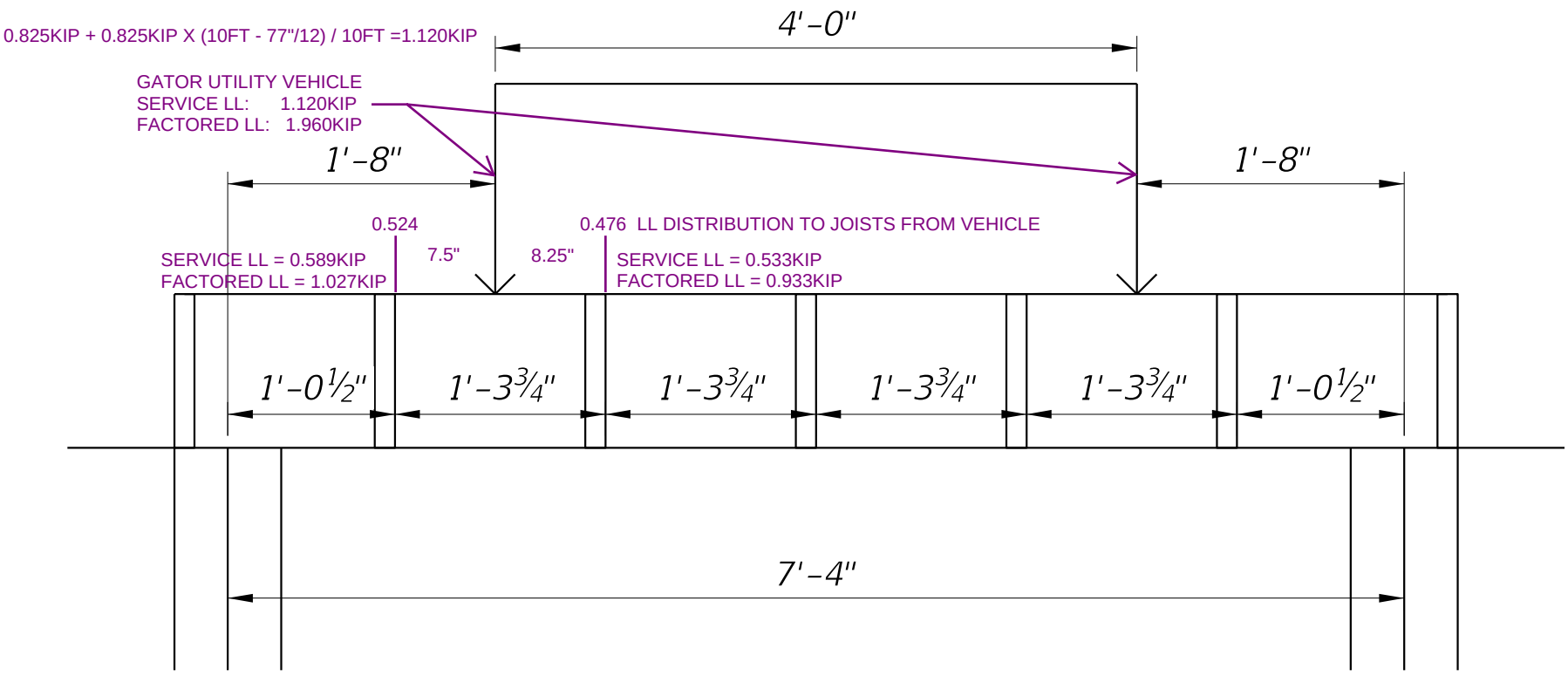

SERVICE
DL REACTIONS INTERIOR JOISTS = Rcapdl = 0.062 KIP
DL REACTIONS EXTERIOR JOISTS = Rcapdl/2 + (Nrailpost/2 x bpost x dpost x Hmax x DLwood) + (Lspan/2 x DLhdpe x [(brailtop x drailtop) + Nrails x (brail x drail)] = 0.146 KIP

FACTORED
DL REACTIONS INTERIOR JOISTS = 0.078 KIP
DL REACTIONS EXTERIOR JOISTS = 0.175 KIP

LL DUE TO PEDESTRIAN LOADING

SERVICE
LL REACTIONS INTERIOR JOISTS = 90PSF X 5FT X (1.31FT) = 0.590 KIP
LL REACTIONS EXTERIOR JOISTS = 0.295 KIP

FACTORED
LL REACTIONS INTERIOR JOISTS = 1.033 KIP
LL REACTIONS EXTERIOR JOISTS = 0.517 KIP

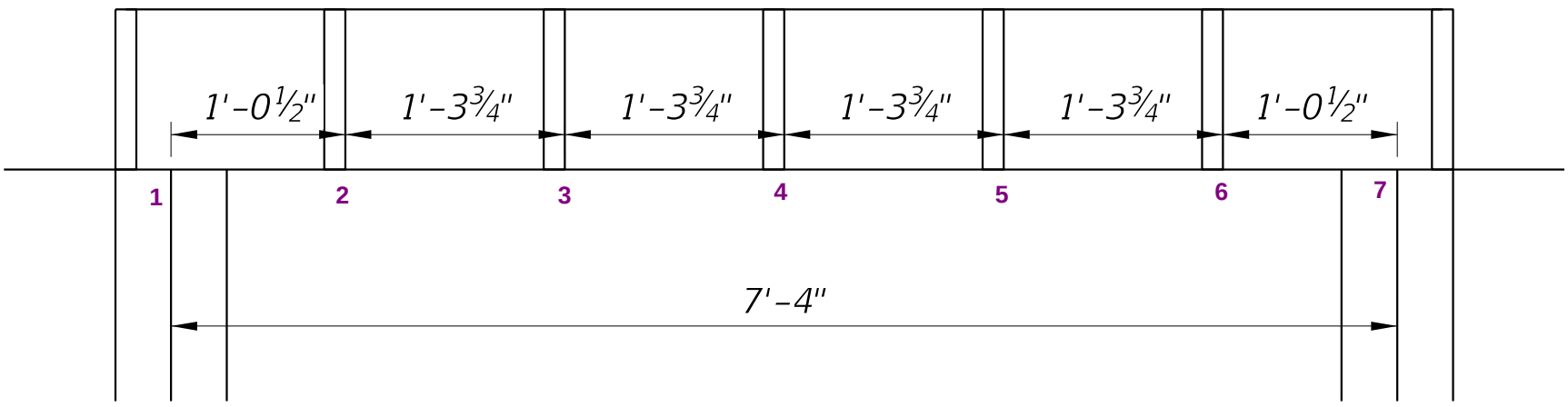

NODE LOCATIONS:
1 - 0
2 - 1.042 FT
3 - 2.354 FT
4 - 3.667 FT
5 - 4.979 FT
6 - 6.292 FT
7 - 7.333 FT

Graphics View 1

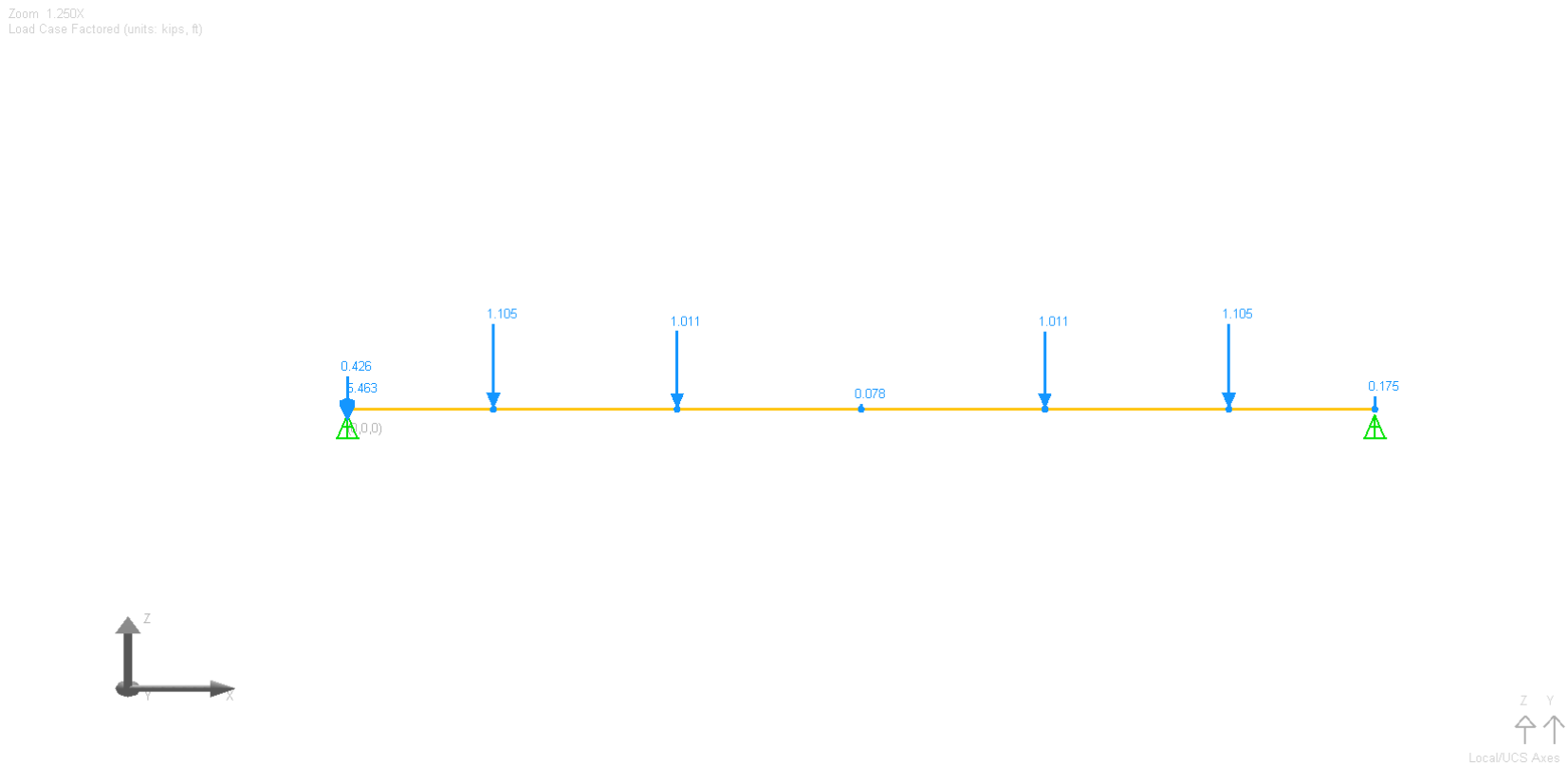

INPUT : Material Properties

Name	Modulus of Elasticity (kips/in²)	Poisson Ratio	Shear Modulus (kips/in²)	Unit Weight (kips/in³)	Thermal Expansion (1/ °F *10^-6)	Assigned
Pine, Eastern White	1,060.00	0.0000	530.00	0.0000	0.000000	Yes

INPUT : Sections

Name	Section Area (in²)	Shear Area in yy (in²)	Shear Area in zz (in²)	Torsion Constant (in^4)	Inertia Izz (in^4)	Inertia Iyy (in^4)	Plastic Modulus Zyy (in³)	Plastic Modulus Zzz (in³)	Perimeter (in)	Material Time-Effect	Ductility	Residual Strength (%)	Assigned
Rectangle	100.0000	83.3333	83.3333	1,410.0000	833.3333	833.3333	0.0000	0.0000	40.0000	(NONE)	50.	0.	Yes

INPUT : Section Stress Points

Name	Point 1 Y (in)	Point 1 Z (in)	Point 2 Y (in)	Point 2 Z (in)	Point 3 Y (in)	Point 3 Z (in)	Point 4 Y (in)	Point 4 Z (in)	Point 5 Y (in)	Point 5 Z (in)	Point 6 Y (in)	Point 6 Z (in)
Rectangle	5.0000	5.0000	5.0000	-5.0000	-5.0000	-5.0000	-5.0000	5.0000	(NONE)	(NONE)	(NONE)	(NONE)

INPUT : Section Dimensions

Name	Shape	Dimension D1	Dimension D2	Dimension D3	Dimension D4	Dimension D5	Dimension D6
Rectangle	Rectangle	10.0000	10.0000				

INPUT : Joints

ID	X (ft)	Y (ft)	Z (ft)	Translation DOF	Rotation DOF	Displacement UCS	Assignment
1	0.0000	0.0000	0.0000	all fixed	all free	Global	Yes
2	1.0420	0.0000	0.0000	all free	all free	Global	Yes
3	2.3540	0.0000	0.0000	all free	all free	Global	Yes
4	3.6670	0.0000	0.0000	all free	all free	Global	Yes
5	4.9790	0.0000	0.0000	all free	all free	Global	Yes
6	6.2920	0.0000	0.0000	all free	all free	Global	Yes
7	7.3330	0.0000	0.0000	all fixed	all free	Global	Yes

INPUT : Members

ID	I-Joint	J-Joint	Span	Type	Section at Start	Section at End	Material	Prestress Force (kips)	Length (ft)	Rigid Zone from Start (x/L)	Rigid Zone from End (x/L)	Orientation Angle (deg)	Casting (day)	Structure Group
1	1	2	-	Beam	Rectangle	(same as start)	Pine, Eastern	0.0000	1.042	0.0000	0.0000	0.0000	0	(none)
2	2	3	-	Beam	Rectangle	(same as start)	Pine, Eastern	0.0000	1.312	0.0000	0.0000	0.0000	0	(none)
3	3	4	-	Beam	Rectangle	(same as start)	Pine, Eastern	0.0000	1.313	0.0000	0.0000	0.0000	0	(none)
4	4	5	-	Beam	Rectangle	(same as start)	Pine, Eastern	0.0000	1.312	0.0000	0.0000	0.0000	0	(none)
5	5	6	-	Beam	Rectangle	(same as start)	Pine, Eastern	0.0000	1.313	0.0000	0.0000	0.0000	0	(none)
6	6	7	-	Beam	Rectangle	(same as start)	Pine, Eastern	0.0000	1.041	0.0000	0.0000	0.0000	0	(none)

INPUT : Member End Offsets

ID	I-Offset X (ft)	I-Offset Y (ft)	I-Offset Z (ft)	J-Offset X (ft)	J-Offset Y (ft)	J-Offset Z (ft)
1	0.0000	0.0000	0.0000	0.0000	0.0000	0.0000
2	0.0000	0.0000	0.0000	0.0000	0.0000	0.0000
3	0.0000	0.0000	0.0000	0.0000	0.0000	0.0000
4	0.0000	0.0000	0.0000	0.0000	0.0000	0.0000
5	0.0000	0.0000	0.0000	0.0000	0.0000	0.0000
6	0.0000	0.0000	0.0000	0.0000	0.0000	0.0000

INPUT : More Material Properties

Name	Yield Stress (kips/in²)	Post-yield to Initial Slope Ratio	Concrete Strength Specimen	Concrete Fck or Steel Fu (kips/in²)	Concrete Cement Hardening Type	Tendon GUTS (kips/in²)	Material Time-Effect	Assigned
Pine, Eastern White	7.60	0.020	Cylinder	0.00	Not Concrete	0.00	(NONE)	Yes

Load Cases

ID	Name	Analysis Type	Class	Status	Weight Factor X	Weight Factor Y	Weight Factor Z	Is Dynamic Mass?	Assigned to Load Combinati	# of Joint Loads	# of Support Loads	# of Member Loads	# of Member Thermal	# of Plate Loads	# of Moving Loads	# of THA Loading	# of THA Initial
2	Service	Static	None	Active	0.0000	0.0000	0.0000	No	No	7	0	0	0	0	0	0	0
3	Factored	Static	None	Active	0.0000	0.0000	0.0000	No	No	7	0	0	0	0	0	0	0

LOAD CASE Service, Joint Loads

Joint	X-Force (kips)	Y-Force (kips)	Z-Force (kips)	X-Moment (kips-ft)	Y-Moment (kips-ft)	Z-Moment (kips-ft)
1	0.0000	0.0000	-0.3970	5.4630	0.0000	0.0000
2	0.0000	0.0000	-0.6510	0.0000	0.0000	0.0000
3	0.0000	0.0000	-0.5950	0.0000	0.0000	0.0000
4	0.0000	0.0000	-0.0620	0.0000	0.0000	0.0000
6	0.0000	0.0000	-0.6510	0.0000	0.0000	0.0000
7	0.0000	0.0000	-0.1460	0.0000	0.0000	0.0000
5	0.0000	0.0000	-0.5950	0.0000	0.0000	0.0000

LOAD CASE Factored, Joint Loads

Joint	X-Force (kips)	Y-Force (kips)	Z-Force (kips)	X-Moment (kips-ft)	Y-Moment (kips-ft)	Z-Moment (kips-ft)
1	0.0000	0.0000	-0.4260	5.4630	0.0000	0.0000
2	0.0000	0.0000	-1.1050	0.0000	0.0000	0.0000
3	0.0000	0.0000	-1.0110	0.0000	0.0000	0.0000
4	0.0000	0.0000	-0.0780	0.0000	0.0000	0.0000
6	0.0000	0.0000	-1.1050	0.0000	0.0000	0.0000
7	0.0000	0.0000	-0.1750	0.0000	0.0000	0.0000
5	0.0000	0.0000	-1.0110	0.0000	0.0000	0.0000

RESULTS FOR VEHICLE LOADING

SERVICE - CAP MOMENT

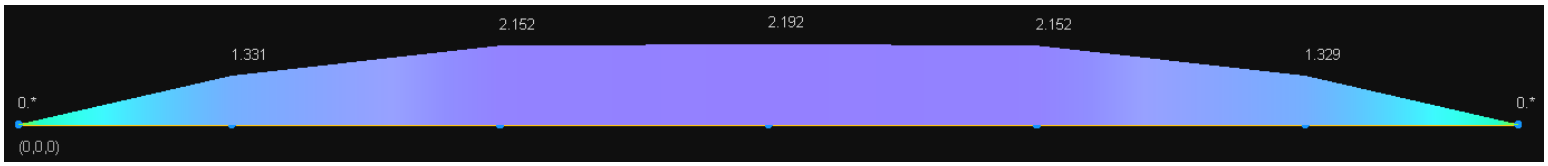

FACTORED - CAP MOMENT

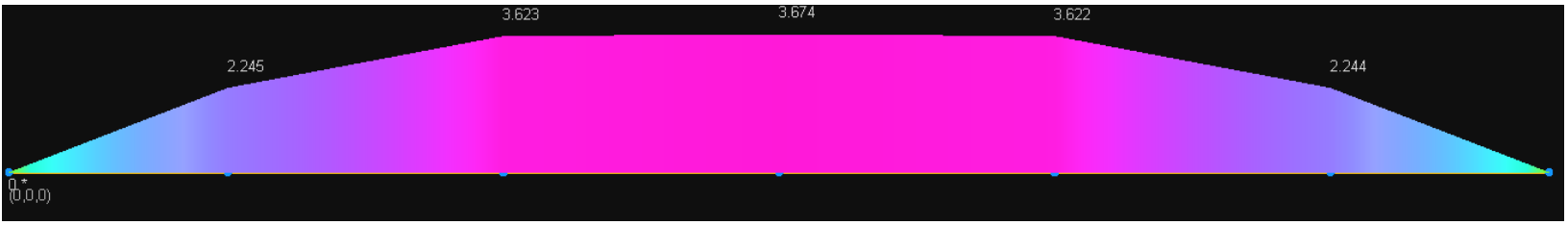

SERVICE - CAP SHEAR



FACTORED - CAP SHEAR

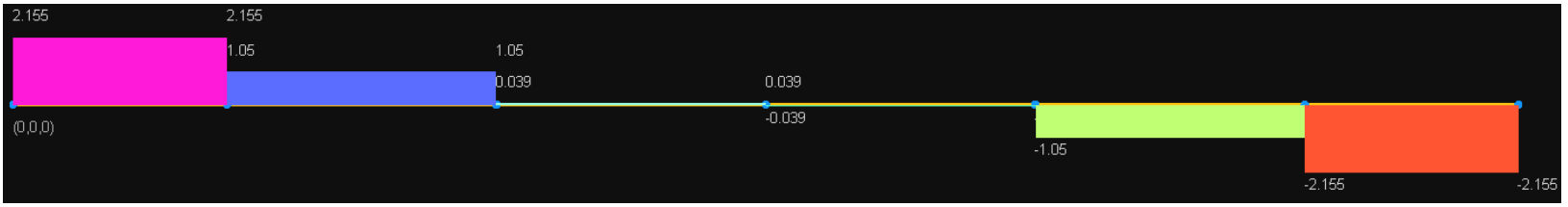

SERVICE - REACTION



FACTORED - REACTION



Graphics View 1

Zoom 1.250X
Load Case Factored (units: kips, ft)

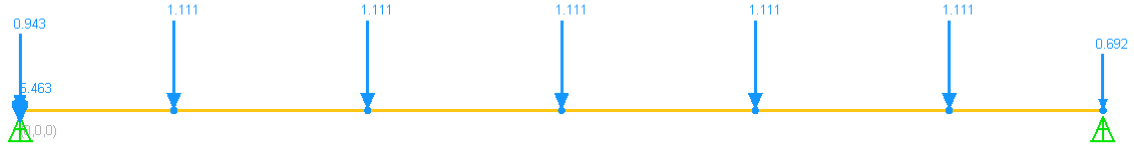

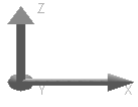



INPUT : Material Properties

Name	Modulus of Elasticity (kips/in²)	Poisson Ratio	Shear Modulus (kips/in²)	Unit Weight (kips/in³)	Thermal Expansion (1/ °F *10^-6)	Assigned
Pine, Eastern White	1,060.00	0.0000	530.00	0.0000	0.000000	Yes

INPUT : Sections

Name	Section Area (in²)	Shear Area in yy (in²)	Shear Area in zz (in²)	Torsion Constant (in^4)	Inertia Izz (in^4)	Inertia Iyy (in^4)	Plastic Modulus Zyy (in³)	Plastic Modulus Zzz (in³)	Perimeter (in)	Material Time-Effect	Ductility	Residual Strength (%)	Assigned
Rectangle	100.0000	83.3333	83.3333	1,410.0000	833.3333	833.3333	0.0000	0.0000	40.0000	(NONE)	50.	0.	Yes

INPUT : Section Stress Points

Name	Point 1 Y (in)	Point 1 Z (in)	Point 2 Y (in)	Point 2 Z (in)	Point 3 Y (in)	Point 3 Z (in)	Point 4 Y (in)	Point 4 Z (in)	Point 5 Y (in)	Point 5 Z (in)	Point 6 Y (in)	Point 6 Z (in)
Rectangle	5.0000	5.0000	5.0000	-5.0000	-5.0000	-5.0000	-5.0000	5.0000	(NONE)	(NONE)	(NONE)	(NONE)

INPUT : Section Dimensions

Name	Shape	Dimension D1	Dimension D2	Dimension D3	Dimension D4	Dimension D5	Dimension D6
Rectangle	Rectangle	10.0000	10.0000				

INPUT : Joints

ID	X (ft)	Y (ft)	Z (ft)	Translation DOF	Rotation DOF	Displacement UCS	Assignment
1	0.0000	0.0000	0.0000	all fixed	all free	Global	Yes
2	1.0420	0.0000	0.0000	all free	all free	Global	Yes
3	2.3540	0.0000	0.0000	all free	all free	Global	Yes
4	3.6670	0.0000	0.0000	all free	all free	Global	Yes
5	4.9790	0.0000	0.0000	all free	all free	Global	Yes
6	6.2920	0.0000	0.0000	all free	all free	Global	Yes
7	7.3330	0.0000	0.0000	all fixed	all free	Global	Yes

INPUT : Members

ID	I-Joint	J-Joint	Span	Type	Section at Start	Section at End	Material	Prestress Force (kips)	Length (ft)	Rigid Zone from Start (x/L)	Rigid Zone from End (x/L)	Orientation Angle (deg)	Casting (day)	Structure Group
1	1	2	-	Beam	Rectangle	(same as start)	Pine, Eastern	0.0000	1.042	0.0000	0.0000	0.0000	0	(none)
2	2	3	-	Beam	Rectangle	(same as start)	Pine, Eastern	0.0000	1.312	0.0000	0.0000	0.0000	0	(none)
3	3	4	-	Beam	Rectangle	(same as start)	Pine, Eastern	0.0000	1.313	0.0000	0.0000	0.0000	0	(none)
4	4	5	-	Beam	Rectangle	(same as start)	Pine, Eastern	0.0000	1.312	0.0000	0.0000	0.0000	0	(none)
5	5	6	-	Beam	Rectangle	(same as start)	Pine, Eastern	0.0000	1.313	0.0000	0.0000	0.0000	0	(none)
6	6	7	-	Beam	Rectangle	(same as start)	Pine, Eastern	0.0000	1.041	0.0000	0.0000	0.0000	0	(none)

INPUT : Member End Offsets

ID	I-Offset X (ft)	I-Offset Y (ft)	I-Offset Z (ft)	J-Offset X (ft)	J-Offset Y (ft)	J-Offset Z (ft)
1	0.0000	0.0000	0.0000	0.0000	0.0000	0.0000
2	0.0000	0.0000	0.0000	0.0000	0.0000	0.0000
3	0.0000	0.0000	0.0000	0.0000	0.0000	0.0000
4	0.0000	0.0000	0.0000	0.0000	0.0000	0.0000
5	0.0000	0.0000	0.0000	0.0000	0.0000	0.0000
6	0.0000	0.0000	0.0000	0.0000	0.0000	0.0000

INPUT : More Material Properties

Name	Yield Stress (kips/in²)	Post-yield to Initial Slope Ratio	Concrete Strength Specimen	Concrete Fck or Steel Fu (kips/in²)	Concrete Cement Hardening Type	Tendon GUTS (kips/in²)	Material Time-Effect	Assigned
Pine, Eastern White	7.60	0.020	Cylinder	0.00	Not Concrete	0.00	(NONE)	Yes

Load Cases

ID	Name	Analysis Type	Class	Status	Weight Factor X	Weight Factor Y	Weight Factor Z	Is Dynamic Mass?	Assigned to Load Combinati	# of Joint Loads	# of Support Loads	# of Member Loads	# of Member Thermal	# of Plate Loads	# of Moving Loads	# of THA Loading	# of THA Initial
2	Service	Static	None	Active	0.0000	0.0000	0.0000	No	No	7	0	0	0	0	0	0	0
3	Factored	Static	None	Active	0.0000	0.0000	0.0000	No	No	7	0	0	0	0	0	0	0

LOAD CASE Service, Joint Loads

Joint	X-Force (kips)	Y-Force (kips)	Z-Force (kips)	X-Moment (kips-ft)	Y-Moment (kips-ft)	Z-Moment (kips-ft)
1	0.0000	0.0000	-0.6920	5.4630	0.0000	0.0000
2	0.0000	0.0000	-0.6520	0.0000	0.0000	0.0000
3	0.0000	0.0000	-0.6520	0.0000	0.0000	0.0000
4	0.0000	0.0000	-0.6520	0.0000	0.0000	0.0000
6	0.0000	0.0000	-0.6520	0.0000	0.0000	0.0000
7	0.0000	0.0000	-0.4410	0.0000	0.0000	0.0000
5	0.0000	0.0000	-0.6520	0.0000	0.0000	0.0000

LOAD CASE Factored, Joint Loads

Joint	X-Force (kips)	Y-Force (kips)	Z-Force (kips)	X-Moment (kips-ft)	Y-Moment (kips-ft)	Z-Moment (kips-ft)
1	0.0000	0.0000	-0.9430	5.4630	0.0000	0.0000
2	0.0000	0.0000	-1.1110	0.0000	0.0000	0.0000
3	0.0000	0.0000	-1.1110	0.0000	0.0000	0.0000
4	0.0000	0.0000	-1.1110	0.0000	0.0000	0.0000
6	0.0000	0.0000	-1.1110	0.0000	0.0000	0.0000
7	0.0000	0.0000	-0.6920	0.0000	0.0000	0.0000
5	0.0000	0.0000	-1.1110	0.0000	0.0000	0.0000

RESULTS FOR PEDESTRIAN LOADING

SERVICE - CAP MOMENT



FACTORED - CAP MOMENT

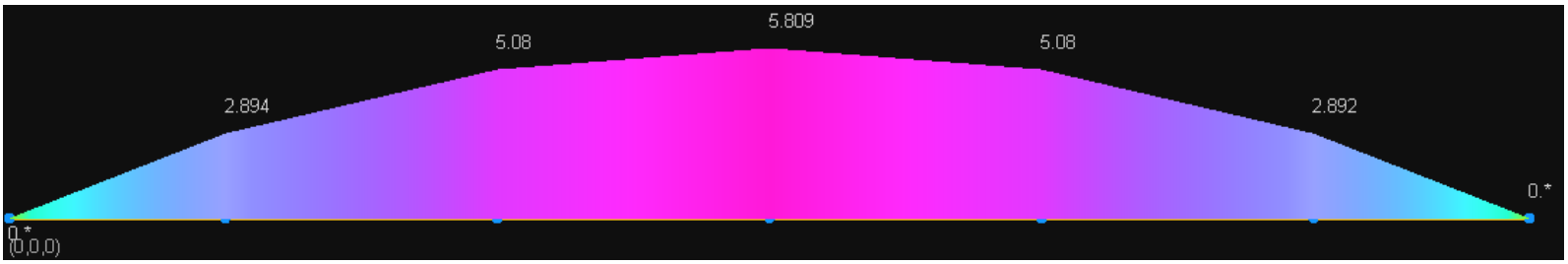

SERVICE - CAP SHEAR

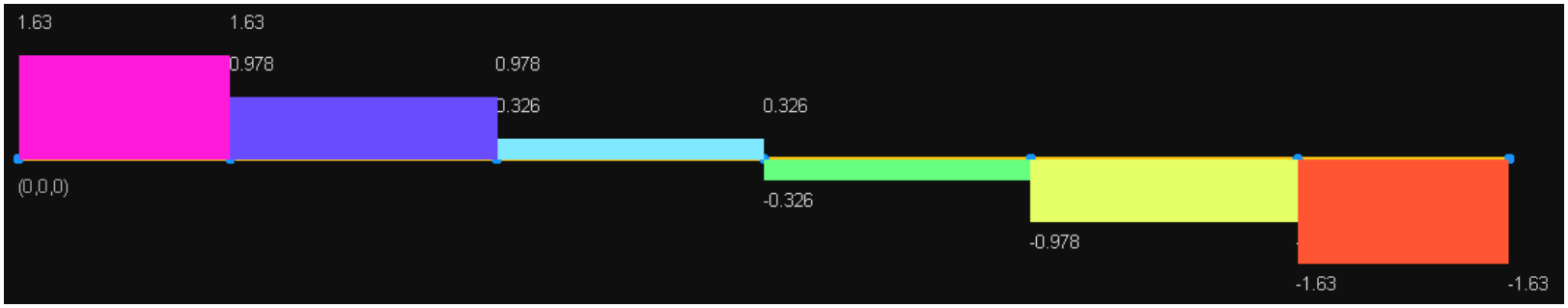

FACTORED - CAP SHEAR

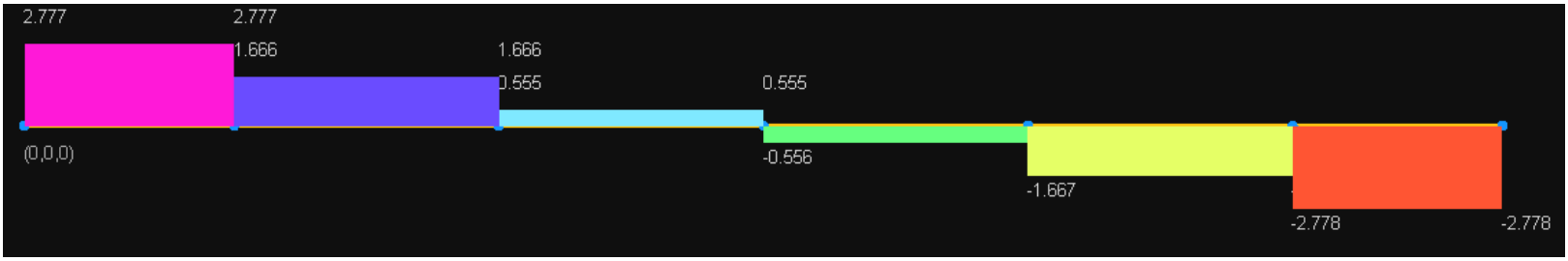

SERVICE - REACTION



FACTORED - REACTION



LIGHT POST CALCULATIONS

FLORIDA BRIDGE AND TRANSPORTATION INC.

JOB# 21-31 SHEET# 1
PROJECT NAME: Sun Trail
SUBJECT: Square Wood Post
POLE ID/STATION: 13' Mounting Height
CALCULATED BY: ADB DATE: Mar-24
CHECKED BY: MN DATE: Mar-24

SQUARE WOOD POST LUMINAIRE DESIGN

WIND SPEED: (SDG Table 2.4.1-1 Basic Wind Speed)

Wind Pressure Design Criteria as per AASHTO LRFD Specifications for Structural Supports for Highway Signs, Luminaires, and Traffic Signals, First Edition 2015 (LRFDLTS-1):

(LRFDLTS-1 3.8.1) Wind Pressure = $0.00256*K_z*K_d*G*V^2*C_d$

Height & Exposure Factor =	K_z	(LRFDLTS-1, Table C3.8.4-1)
Directionality Factor =	K_d	(LRFDLTS-1, Table 3.8.5-1)
Gust Effect Factor=	G	(LRFDLTS-1, Section 3.8.6)
Drag Coefficient =	C_d	(LRFDLTS-1, Table 3.8.7-1)

County:	Volusia		
Mean Recurrence Interval (MRI):	300	year	(Typically 10, 300, or 700 years for FDOT projects)
Design Wind Speed:	150	mph	
Basic Wind Speed:	140	mph	(FDOT Modifications to LRFDLTS-1, Section 3.8.2)
Pole Exposed Height=	12.00	ft	
Pole Size at Top=	5.50	in	
Taper =	0.0000	in/ft	
Total Pole Length =	12.00	ft	
Average Exposed Pole Width =	5.50	in	
Center of Exposed Height =	6.00	ft	

Wind Load Analysis (Pole)

Segment ID		Z Height above Ground (ft)	K_z Height Coefficient	K_d Directionality Factor	G Gust Factor	V Wind Velocity (mph)	P_z Wind Pressure (without drag coefficient) (psf)	Pole Taper (in/ft)	Pole Size (in)	Avg Dia. (in)	Corner Radius	Cd Drag Coeff.	Exposed Area of Segment (sf)	Pressure on Segment (Includes Drag Coefficient) (psf)	Wind Force on Segment (kip)	Moment Arm to Base (ft)	Wind Moment Acting at Base of Pole (ft*kip)
I	Bottom	4	0.84	0.90	1.14	140	43.24	0.000	5.50	5.50	N/A	2.000	5.04	86.49	0.44	9.50	4.14
	Top	15							5.50								
I	Bottom	15	0.90	0.90	1.14	140	46.33	5.500	5.50	5.50	N/A	2.000	0.46	92.67	0.04	15.50	0.66
	Top	16.0							5.50								
Subtotal (Pole only)															**0.48**	10.03	**4.80**

Wind Load Analysis (Attachments)

Description	Mounting Height (ft)	K_z Height Coefficient	K_d Directionality Factor	G Gust Factor	V Wind Velocity (mph)	Cd Drag Coeff.	Pressure on Segment (Includes Drag Coefficient) (psf)	Member Width (in)	Member Depth (in)	Member Length (in)	Exposed Area (sf)	No. of Equipment	Applied Wind Force (kip)	Moment Arm to Base (ft)	Wind Moment Acting at Base of Pole (ft*kip)
Luminaire	14.5	0.84	0.95	1.14	140	1.000	45.65	-	-	-	1.00	1	0.05	14.50	0.66
Subtotal (Att. Only)													**0.05**		**0.66**

FACTORED DESIGN LOADS

Pole Trans. Moment at Base (Wind) =	**5.463**	kip-ft
Pole Trans. Shear at Base (Wind) =	**0.524**	kip
Axial Load (Dead) =	**0.251**	kip
Pole Long. Moment at Base (Dead) =	**0.000**	kip-ft
Torsion (Wind) =	**0.000**	kip-ft

	75% WL:
Pole Trans. Moment at Base (Wind) =	4.097
Pole Trans. Shear at Base (Wind) =	0.393
Torsion (Wind) =	0.000

Pole Thickness =	**5.50**	in
Pole Volume =	**2.52**	ft^3
Pole Unit Weight =	**40**	pcf
Pole Weight =	**101**	lbs
Luminaire Weight =	**75**	lbs
Arm Tube Weight =	**25**	lbs
Arm Length =	**0**	ft

BRIDGE-MOUNTED LIGHT POST ANALYSIS - In accordance with:

1) AASHTO LRFD Guide Specifications for the Design of Pedestrian Bridges - December 2009
2) AASHTO LRFD Bridge Design Specifications - 9th Edition - 2020
3) National Design Specifications for Wood Construction (NDS) - 2018 Edition

DESIGN LOADS (Factored from Wind Load Calculations)

AXIAL LOAD: $P_u := 0.251 \cdot kip$

FLEXURAL LOAD: $M_u := 5.463 \cdot kip \cdot ft$

Southern Pine - Select Structural 6" x 6"

Bending Design Value: $F_{bo} := 2.1 \cdot ksi$

Compression Design Value: $F_{co} := 1.8 \cdot ksi$

Resistance Factor: $\phi := 0.85$

Modulus of Elasticity: $E_o := 1800 \cdot ksi$

MEMBER PROPERTIES EFFECTIVE SIZES

Member (Nom Size)	Horizontal Dimension	Vertical Dimension
LIGHT POST (6 x 6)	$b_{post} := 5.5 \cdot in$	$d_{post} := 5.5 \cdot in$

Gross Section Area: $A_g := b_{post} \cdot d_{post}$

Post Height: $L := 11 \cdot ft$

Effective Length Factor: $K := 2.1$

Effective Length: $L_e := K \cdot L = 277.2 \cdot in$

Section Modulus: $S_p := b_{post} \cdot \frac{d_{post}^2}{6}$

Applicable Adjustment Factors [Ref 2 - LRFD 8.4.4]

Format Conversion Factor [8.4.4.2]

$C_{KF\_b} := \frac{2.5}{\phi}$ $C_{KF\_b} = 2.94$ For Bending

$C_{KF\_v} := C_{KF\_b}$ $C_{KF\_v} = 2.94$ For Shear

$C_M := 1.0$ Wet Service Factor [8.4.4.3]

$C_i := 0.8$ Incising Factor [8.4.4.7] - Conserv.

$C_F := 1.0$ Size Factor [8.4.4.4]

$C_L := 1.0$ Beam Stability Factor [8.6.2]

$C_{fu} := 1.0$ Flat Use Factor [8.4.4.6] - Load applied to narrow face- edgwise - N/A

$C_d := 1.0$ Factor [8.4.4.8] - N/A

$C_\lambda := 0.8$ Time Effect Factor [8.4.4.9] - (Strength 1)

$C_t := 1.0$ Temperature Factor [REF 3-5.3.4]

Adjusted Design Values [Ref 2 - LRFD 8.4.4.1]

$F_b := F_{bo} \cdot C_{KF\_b} \cdot C_M \cdot C_F \cdot C_\lambda \cdot C_{fu} \cdot C_i \cdot C_d$ $F_b = 3.953 \cdot ksi$

$F_c := \left(F_{co} \cdot C_{KF\_v} \cdot C_M \cdot C_i \cdot C_\lambda\right)$ $F_c = 3.388 \cdot ksi$

$E := E_o \cdot C_M \cdot C_i$ $E = 1440 \cdot ksi$

Flexural Capacity [Ref 2 - LRFD 8.6.1]

$M_r := \phi \cdot F_b \cdot S_p \cdot C_L$ $M_r = 7.764 \cdot kip \cdot ft$ $M_u = 5.463 \cdot kip \cdot ft$

$Check_1 := if(M_r > M_u, "OK", "NG")$ $Check_1 = "OK"$

$M_r := S_p \cdot F_b$ $M_r = 9.134 \cdot kip \cdot ft$ $M_u = 5.463 \cdot kip \cdot ft$

$Check_2 := if(M_r > M_u, "OK", "NG")$ $Check_2 = "OK"$

Compressive Capacity [Ref 2 - LRFD 8.8.1]

Column Stability Factor [8.8.2-2]

$K_{cE} := 0.52$ Euler Buckling Coefficient $c_1 := 0.8$ coefficient for sawn lumber

$F_{ce} := \frac{K_{cE} \cdot E \cdot d_{post}^2}{L_e^2}$ Euler Bucking Stress

$B := \frac{F_{ce}}{F_c} = 0.087$ Beam Stability Factor [8.6.2]

$C_p := \frac{1 + B}{2c_1} - \left[\left(\frac{1 + B}{2c_1}\right)^2 - \frac{B}{c_1}\right]^{0.5}$ $C_p = 0.085$

$P_r := \phi \cdot F_c \cdot A_g \cdot C_p$ $M_r = 9.134 \cdot kip \cdot ft$ $M_u = 5.463 \cdot kip \cdot ft$

$Check_1 := if(M_r > M_u, "OK", "NG")$ $Check_1 = "OK"$

$M_r := S_p \cdot F_b$ $M_r = 9.134 \cdot kip \cdot ft$ $M_u = 5.463 \cdot kip \cdot ft$

$Check_2 := if(M_r > M_u, "OK", "NG")$ $Check_2 = "OK"$

Combined Flexure and Compression [Ref 2 - LRFD 8.10.2]

$$Check_3 := if\left[1.0 > \left(\frac{P_u}{P_r}\right)^2 + \frac{M_u}{M_r\left(1 - \frac{P_u}{F_{ce} \cdot A_g}\right)}, "OK", "NG"\right]$$ $Check_3 = "OK"$

$$\left(\frac{P_u}{P_r}\right)^2 + \frac{M_u}{M_r\left(1 - \frac{P_u}{F_{ce} \cdot A_g}\right)} = 0.617$$

Connection Design (Bolts connecting light post and Pile Cap Beam)

Connections use a 7/8" Diameter A354 Grade BC Threaded rods for connections from cap to pile

7/8" Properties

$A_{bolt} := 0.462 \cdot in^2$

$f_y := 109 \cdot ksi$ $f_u := 120 \cdot ksi$

$D_{eff} := \sqrt{\frac{A_{bolt}}{\pi} \cdot 4} = 0.767 \cdot in$

$S_{rod} := \frac{\pi \cdot D_{eff}^3}{32} = 0.044 \cdot in^3$

$Sp_{rod} := 3 \cdot in$

MEMBER PROPERTIES

Member (Nom Size)	Horizontal Dimension	Vertical Dimension
PILE CAP BEAM (4 x 12)	$b_{pcb} := 3.5 \cdot in$	$d_{pcb} := 11.25 \cdot in$

EFFECTIVE SIZES

Section Modulus: $S_{pcb} := b_{pcb} \cdot \frac{d_{pcb}^2}{6}$ $S_{pcb} = 73.828 \cdot in^3$

$\phi_s := 0.80$ $\phi_t := 0.80$

Factored Shear Resistance of Bolts (threads excluded in Shear Plane) (6.13.2.7-1)

$R_{shear} := \phi_s \cdot 0.56 \cdot A_{bolt} \cdot f_u = 24.837 \cdot kip$

Check the Bolt Shear Resistance

$V_z := P_u \cdot \frac{\left(\frac{b_{pcb} + b_{post}}{2}\right)}{Sp_{rod}} = 0.377 \cdot kip$

$V_x := \frac{M_u}{Sp_{rod}} = 21.852 \cdot kip$

$T_x := \frac{M_u}{Sp_{rod}} = 21.852 \cdot kip$

$V_{bolt} := \left(V_z^2 + V_x^2\right)^{0.5} = 21.855 \cdot kip$ Combined Longitudinal & Transverse Wind Shear

$Check_{15} := \begin{cases} \text{"OK"} & \text{if } V_{bolt} < R_{shear} \\ \text{"FAILS IN SHEAR"} & \text{otherwise} \end{cases}$

$Check_{15} = \text{"OK"}$

$\sigma_{tension} := \frac{\left(\frac{T_x}{2}\right)}{A_{bolt}} = 23.649 \cdot ksi$ divided by 2 for 2 bolts

Check the Bolt Tension

$Check_{16} := \begin{cases} \text{"OK"} & \text{if } \sigma_{tension} < 0.9 f_y \\ \text{"FAILS IN TENSION"} & \text{otherwise} \end{cases}$ $\frac{\sigma_{tension}}{f_y} = 0.217$

$Check_{16} = \text{"OK"}$

Factored Tensile Resistance of Bolt under combined Tension and Shear (6.13.2.11-1 & 6.13.2.11-2)

$$R_n := \frac{R_{shear}}{\phi_s}$$ Nominal shear resistance

$$T_n := \begin{cases} \phi_t \cdot 0.76 \cdot A_{bolt} \cdot f_u & \text{if } \frac{V_{bolt}}{R_n} \le 0.33 \\ \left[\phi_t \cdot 0.76 \cdot A_{bolt} \cdot f_u \cdot \sqrt{1 - \left(\frac{V_{bolt}}{\phi_s \cdot R_n} \right)^2} \right] & \text{otherwise} \end{cases}$$

$T_n = 16.014 \cdot kip$

Check the Bolt Resistance under Combined Tension and Shear

$T_u := \sigma_{tension} \cdot A_{bolt} = 10.926 \cdot kip$

$$Check_{17} := \begin{cases} \text{"OK"} & \text{if } T_u < T_n \\ \text{"FAILS COMB. TENS. \& SHEAR"} & \text{otherwise} \end{cases}$$

$Check_{17} = \text{"OK"}$

transverse wind

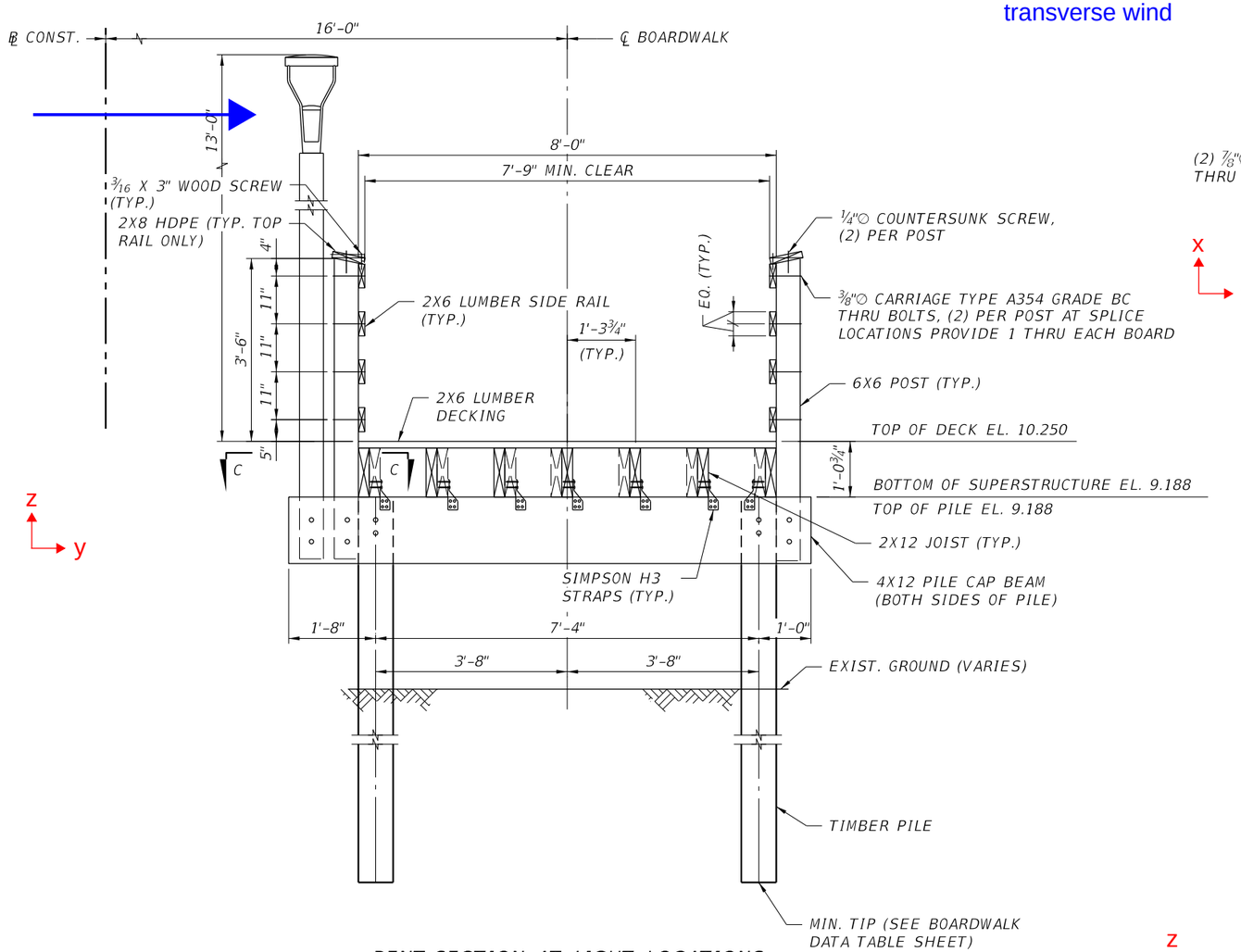

BENT-SECTION AT LIGHT LOCATIONS

(BENT NO. 4, 13, 21, 29, 37, 45, 52, 60 AND 68)

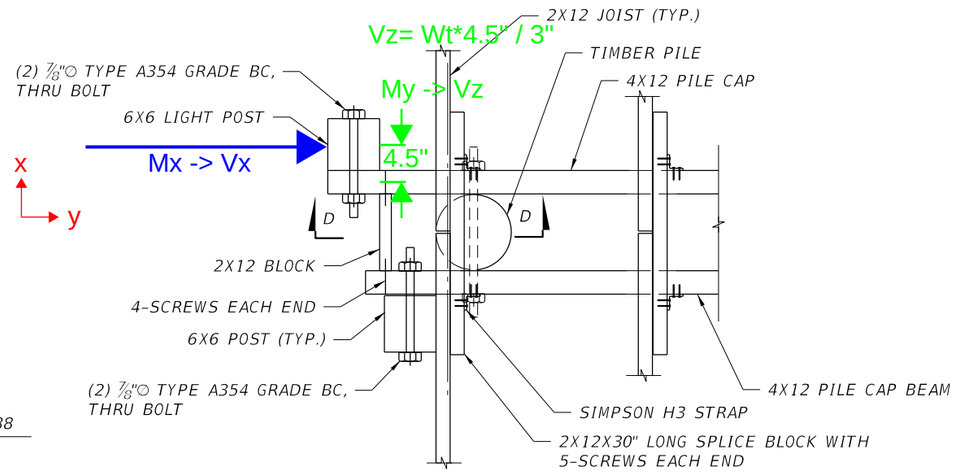

SECTION C-C

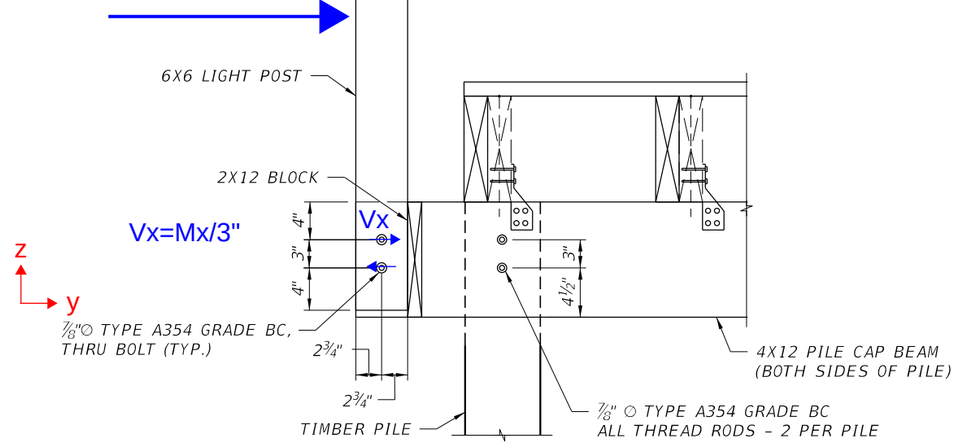

SECTION D-D

NOTES:

1. ALL HARDWARE SHOWN SHALL BE HOT-DIP GALVANIZED (HDG). SIMPSON CONNECTORS SHALL BE GALVANIZED OR ZMAX COATED.
2. SUBMIT DOCUMENTATION FOR ALTERNATIVE CONNECTORS FOR APPROVAL IF IT DIFFERS FROM THE CONNECTORS SHOWN IN THE PLANS.

Mx = My = Mu

THE OFFICIAL RECORD OF THIS SHEET IS THE ELECTRONIC FILE DIGITALLY SIGNED AND SEALED UNDER RULE 61G15-23.004, F.A.C.

Designed By : JAH 05-22
Drawn By : BSW 11-21
Checked By : DAB 05-22
Checked By : DAB 05-22

REVISIONS		
DATE	DESCRIPTION	DATE
	STRUCTURAL CALCULATIONS	

CITY OF PORT ORANGE
1000 CITY CENTER CIRCLE
PORT ORANGE, FL. 32129

MARK NIEDERMANN, P.E.
P.E. LICENSE NUMBER 45957

FLORIDA BRIDGE & TRANSPORTATION, INC.
633 DARTMOUTH STREET
ORLANDO, FL 32804
FBT 21-31.01

SJR2C LOOP TRAIL
FROM SOUTH OF SELIN CIR TO HERBERT ST

ROAD	COUNTY	FINANCIAL PROJECT ID
SPRUCE CREEK RD	VOLUSIA	439865-3-54-01

BOARDWALK DETAILS (2 OF 3)

SHEET NO. B1-04

BWilliams 3/8/2024 1:03:18 PM P:\FDOTWorksets\2021\21-31 SuTrail-Port Orange-TEDS\43986535201\Structures\B1SuperstDet

longitudinal wind

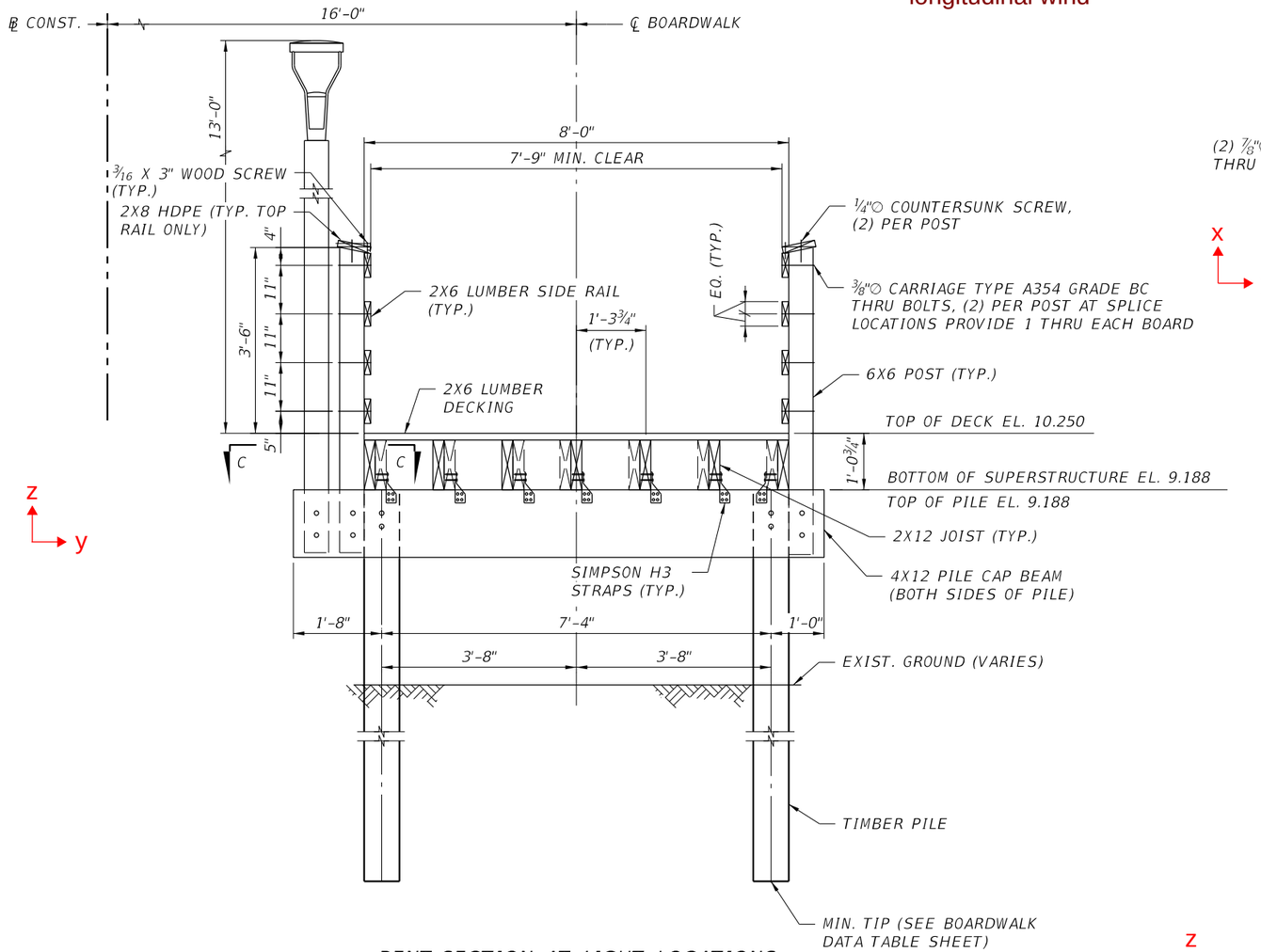

BENT-SECTION AT LIGHT LOCATIONS

(BENT NO. 4, 13, 21, 29, 37, 45, 52, 60 AND 68)

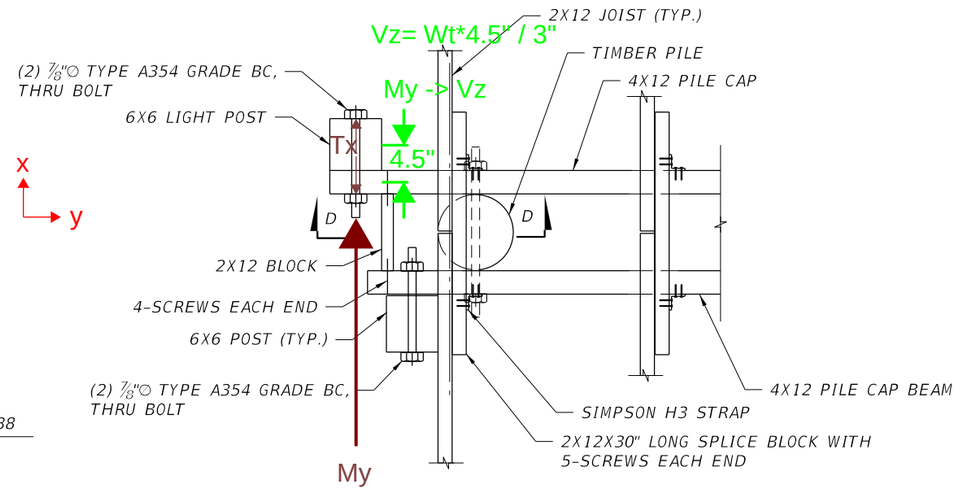

SECTION C-C

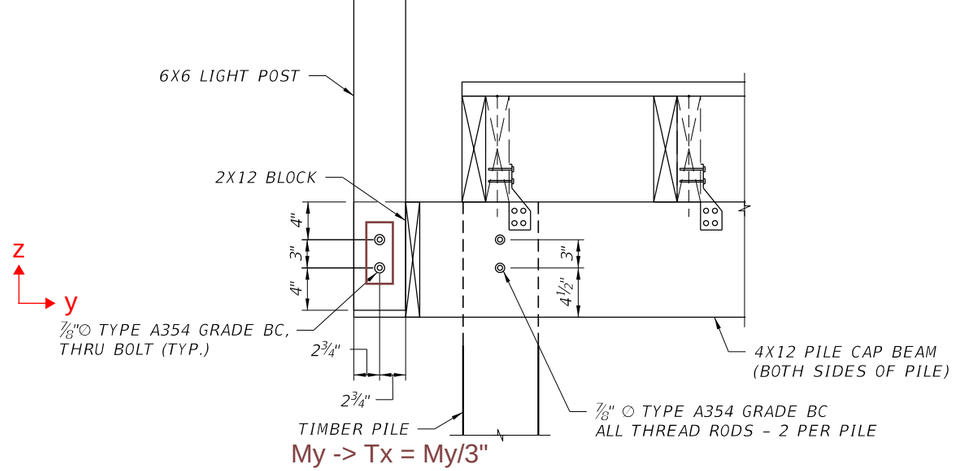

SECTION D-D

Mx = My = Mu

NOTES:

1. ALL HARDWARE SHOWN SHALL BE HOT-DIP GALVANIZED (HDG). SIMPSON CONNECTORS SHALL BE GALVANIZED OR ZMAX COATED.
2. SUBMIT DOCUMENTATION FOR ALTERNATIVE CONNECTORS FOR APPROVAL IF IT DIFFERS FROM THE CONNECTORS SHOWN IN THE PLANS.

REVISIONS		
DATE	DESCRIPTION	DATE

STRUCTURAL CALCULATIONS

CITY OF PORT ORANGE
1000 CITY CENTER CIRCLE
PORT ORANGE, FL. 32129

MARK NIEDERMANN, P.E.
P.E. LICENSE NUMBER 45957

FLORIDA BRIDGE & TRANSPORTATION, INC.
633 DARTMOUTH STREET
ORLANDO, FL 32804

FBT 21-31.01

SJR2C LOOP TRAIL
FROM SOUTH OF SELIN CIR TO HERBERT ST

ROAD	COUNTY	FINANCIAL PROJECT ID
SPRUCE CREEK RD	VOLUSIA	439865-3-54-01

BOARDWALK DETAILS (2 OF 3)

SHEET NO. B1-04

BWilliams 3/8/2024 1:03:18 PM P:\FDOTWorksets\2021\21-31 SuTrail-Port Orange-TEDS\43986535201\Structures\B1SuperstDet

THE OFFICIAL RECORD OF THIS SHEET IS THE ELECTRONIC FILE DIGITALLY SIGNED AND SEALED UNDER RULE 61G15-23.004, F.A.C.

Designed By : JAH 05-22
Drawn By : BSW 11-21
Checked By : DAB 05-22
Checked By : DAB 05-22

FLORIDA BRIDGE AND TRANSPORTATION INC.

JOB# 21-31 SHEET# 1
PROJECT NAME: Sun Trail
SUBJECT: Square Wood Post
POLE ID/STATION: 13' Mounting Height
CALCULATED BY: ADB DATE: Mar-24
CHECKED BY: DAB DATE: Mar-24

SQUARE WOOD POST LUMINAIRE DESIGN

WIND SPEED: (SDG Table 2.4.1-1 Basic Wind Speed)

Wind Pressure Design Criteria as per AASHTO LRFD Specifications for Structural Supports for Highway Signs, Luminaires, and Traffic Signals, First Edition 2015 (LRFDLTS-1):

(LRFDLTS-1 3.8.1) Wind Pressure = $0.00256*K_z*K_d*G*V^2*C_d$

Height & Exposure Factor =	K_z	(LRFDLTS-1, Table C3.8.4-1)
Directionality Factor =	K_d	(LRFDLTS-1, Table 3.8.5-1)
Gust Effect Factor=	G	(LRFDLTS-1, Section 3.8.6)
Drag Coefficient =	C_d	(LRFDLTS-1, Table 3.8.7-1)

County:	Volusia		
Mean Recurrence Interval (MRI):	300	year	(Typically 10, 300, or 700 years for FDOT projects)
Design Wind Speed:	150	mph	
Basic Wind Speed:	140	mph	(FDOT Modifications to LRFDLTS-1, Section 3.8.2)
Pole Exposed Height=	17.00	ft	(18' MH)
Pole Size at Top=	5.50	in	
Taper =	0.0000	in/ft	
Total Pole Length =	17.00	ft	
Average Exposed Pole Width =	5.50	in	
Center of Exposed Height =	8.50	ft	

Wind Load Analysis (Pole)

Segment ID		Z Height above Ground (ft)	K_z Height Coefficient	K_d Directionality Factor	G Gust Factor	V Wind Velocity (mph)	P_z Wind Pressure (without drag coefficient) (psf)	Pole Taper (in/ft)	Pole Size (in)	Avg Dia. (in)	Corner Radius	Cd Drag Coeff.	Exposed Area of Segment (sf)	Pressure on Segment (Includes Drag Coefficient) (psf)	Wind Force on Segment (kip)	Moment Arm to Base (ft)	Wind Moment Acting at Base of Pole (ft*kip)
I	Bottom	0	0.84	0.90	1.14	140	43.24	0.000	5.50	5.50	N/A	2.000	6.88	86.49	0.59	7.50	4.46
	Top	15							5.50								
I	Bottom	15	0.90	0.90	1.14	140	46.33	0.000	5.50	5.50	N/A	2.000	0.92	92.67	0.08	16.00	1.36
	Top	17.0							5.50								
Subtotal (Pole only)															**0.68**	8.56	**5.82**

Wind Load Analysis (Attachments)

Description	Mounting Height (ft)	K_z Height Coefficient	K_d Directionality Factor	G Gust Factor	V Wind Velocity (mph)	Cd Drag Coeff.	Pressure on Segment (Includes Drag Coefficient) (psf)	Member Width (in)	Member Depth (in)	Member Length (in)	Exposed Area (sf)	No. of Equipment	Applied Wind Force (kip)	Moment Arm to Base (ft)	Wind Moment Acting at Base of Pole (ft*kip)
Luminaire	18	0.84	0.95	1.14	140	1.000	45.65	-	-	-	1.00	1	0.05	18.00	0.82
Subtotal (Att. Only)													**0.05**		**0.82**

UNFACTORED FOOTING DESIGN LOADS

Pole Trans. Moment at Base (Wind) =	**6.640**	kip-ft
Pole Trans. Shear at Base (Wind) =	**0.725**	kip
Axial Load (Dead) =	**0.304**	kip
Pole Long. Moment at Base (Dead) =	**0.000**	kip-ft
Torsion (Wind) =	**0.000**	kip-ft

Pole Thickness =	**5.50**	in
Pole Volume =	**3.57**	ft^3
Pole Unit Weight =	**40**	pcf
Pole Weight =	**143**	lbs
Luminaire Weight =	**75**	lbs
Arm Tube Weight =	**25**	lbs
Arm Length =	**0**	ft

75% WL:

Pole Trans. Moment at Base (Wind) =	4.980
Pole Trans. Shear at Base (Wind) =	0.544
Torsion (Wind) =	0.000

STAND-ALONE LIGHT POST ANALYSIS - In accordance with:

1) AASHTO LRFD Guide Specifications for the Design of Pedestrian Bridges - December 2009
2) AASHTO LRFD Bridge Design Specifications - 9th Edition - 2020
3) National Design Specifications for Wood Construction (NDS) - 2018 Edition

DESIGN LOADS (Factored from Wind Load Calculations)

AXIAL LOAD: $P_u := 0.304 \cdot kip$

FLEXURAL LOAD: $M_u := 6.64 \cdot kip \cdot ft$

Southern Pine - Select Structural 6" x 6"

Bending Design Value: $F_{bo} := 2.1 \cdot ksi$

Compression Design Value: $F_{co} := 1.8 \cdot ksi$

Resistance Factor: $\phi := 0.85$

Modulus of Elasticity: $E_o := 1800 \cdot ksi$

MEMBER PROPERTIES EFFECTIVE SIZES

Member (Nom Size)	Horizontal Dimension	Vertical Dimension
LIGHT POST (6 x 6)	$b_{post} := 5.5 \cdot in$	$d_{post} := 5.5 \cdot in$

Gross Section Area: $A_g := b_{post} \cdot d_{post}$

Post Height: $L := 11 \cdot ft$

Effective Length Factor: $K := 2.1$

Effective Length: $L_e := K \cdot L = 277.2 \cdot in$

Section Modulus: $S_p := b_{post} \cdot \frac{d_{post}^2}{6}$

Applicable Adjustment Factors [Ref 2 - LRFD 8.4.4]

Format Conversion Factor [8.4.4.2]

$C_{KF\_b} := \frac{2.5}{\phi}$ $C_{KF\_b} = 2.94$ For Bending

$C_{KF\_v} := C_{KF\_b}$ $C_{KF\_v} = 2.94$ For Shear

$C_M := 1.0$ Wet Service Factor [8.4.4.3]

$C_i := 0.8$ Incising Factor [8.4.4.7] - Conserv.

$C_F := 1.0$ Size Factor [8.4.4.4]

$C_L := 1.0$ Beam Stability Factor [8.6.2]

$C_{fu} := 1.0$ Flat Use Factor [8.4.4.6] - Load applied to narrow face- edgwise - N/A

$C_d := 1.0$ Factor [8.4.4.8] - N/A

$C_\lambda := 0.8$ Time Effect Factor [8.4.4.9] - (Strength 1)

$C_t := 1.0$ Temperature Factor [REF 3-5.3.4]

Adjusted Design Values [Ref 2 - LRFD 8.4.4.1]

$F_b := F_{bo} \cdot C_{KF\_b} \cdot C_M \cdot C_F \cdot C_\lambda \cdot C_{fu} \cdot C_i \cdot C_d$ $F_b = 3.953 \cdot ksi$

$F_c := \left(F_{co} \cdot C_{KF\_v} \cdot C_M \cdot C_i \cdot C_\lambda\right)$ $F_c = 3.388 \cdot ksi$

$E := E_o \cdot C_M \cdot C_i$ $E = 1440 \cdot ksi$

Flexural Capacity [Ref 2 - LRFD 8.6.1]

$M_r := \phi \cdot F_b \cdot S_p \cdot C_L$ $M_r = 7.764 \cdot kip \cdot ft$ $M_u = 6.64 \cdot kip \cdot ft$

$Check_1 := if(M_r > M_u, "OK", "NG")$ $Check_1 = "OK"$

$M_r := S_p \cdot F_b$ $M_r = 9.134 \cdot kip \cdot ft$ $M_u = 6.64 \cdot kip \cdot ft$

$Check_2 := if(M_r > M_u, "OK", "NG")$ $Check_2 = "OK"$

Compressive Capacity [Ref 2 - LRFD 8.8.1]

Column Stability Factor [8.8.2-2]

$K_{cE} := 0.52$ Euler Buckling Coefficient $c_1 := 0.8$ coefficient for sawn lumber

$F_{ce} := \frac{K_{cE} \cdot E \cdot d_{post}^2}{L_e^2}$ Euler Bucking Stress

$B := \frac{F_{ce}}{F_c} = 0.087$ Beam Stability Factor [8.6.2]

$C_p := \frac{1 + B}{2c_1} - \left[\left(\frac{1 + B}{2c_1}\right)^2 - \frac{B}{c_1}\right]^{0.5}$ $C_p = 0.085$

$P_r := \phi \cdot F_c \cdot A_g \cdot C_p$ $M_r = 9.134 \cdot kip \cdot ft$ $M_u = 6.64 \cdot kip \cdot ft$

$Check_1 := if(M_r > M_u, "OK", "NG")$ $Check_1 = "OK"$

$M_r := S_p \cdot F_b$ $M_r = 9.134 \cdot kip \cdot ft$ $M_u = 6.64 \cdot kip \cdot ft$

$Check_2 := if(M_r > M_u, "OK", "NG")$ $Check_2 = "OK"$

Combined Flexure and Compression [Ref 2 - LRFD 8.10.2]

$$Check_3 := if\left[1.0 > \left(\frac{P_u}{P_r}\right)^2 + \frac{M_u}{M_r\left(1 - \frac{P_u}{F_{ce} \cdot A_g}\right)}, "OK", "NG"\right]$$

$Check_3 = "OK"$

$$\left(\frac{P_u}{P_r}\right)^2 + \frac{M_u}{M_r\left(1 - \frac{P_u}{F_{ce} \cdot A_g}\right)} = 0.754$$

Drilled Shaft Foundation for Sign, Signal, and Lighting Support Structures v1.1

State Structures Design Office

SUBJECT SUN TRAIL
FIN # FBT 21-31 LOCATION MULTIPLE

DESIGNED BY ADB DATE 03-18-24
CHECKED BY DAB DATE 03-20-24

© 2018 Florida Department of Transportation

Program Changes

SoilType := Sand / Clay

$\phi_{soil} := 25 \cdot deg$ *soil friction angle (sand)*

$c_{soil} := 2.0 \cdot \frac{kip}{ft^2}$ *soil shear strength (clay)*

$N_{blows} := 5$ *number of blows per foot. If N< 5, contact the district geotech Engineer*

$\gamma_{soil} := 40 \cdot pcf$ *effective soil weight (typical design value = 45 ~ 50 pcf)*

Geometry

$b := 2 \cdot ft$ *shaft diameter*

$Offset := 0.0 \cdot ft$ *groundline to top of foundation*

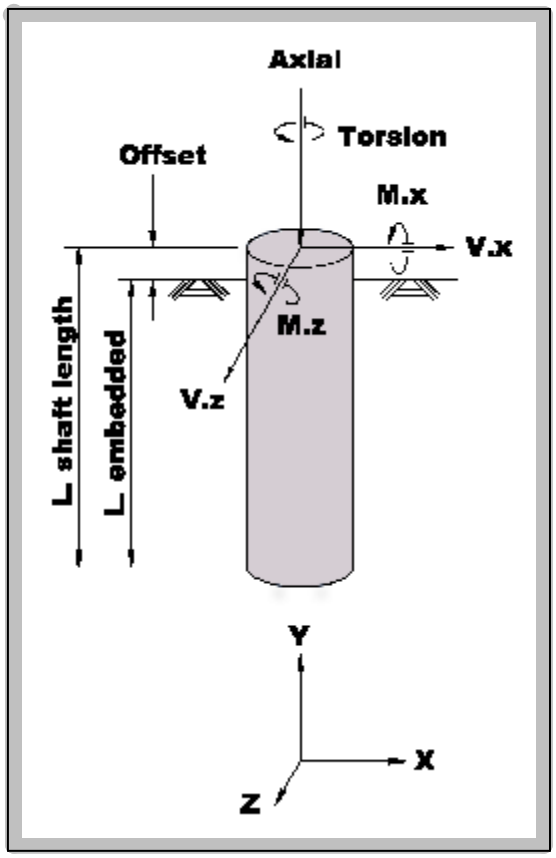

Applied Loads (Extreme I)

$M_x := 6.64 \cdot kip \cdot ft$ $V_x := 0 \cdot kip$ $Torsion := 0 \cdot kip \cdot ft$

$M_z := 0 \cdot kip \cdot ft$ $V_z := 0.725 \cdot kip$ $Axial := .304 \cdot kip$

StructureType := Cantilever Overhead Sign Structure / Mast Arm Signal Structure / Concrete/Steel Strain Poles / Ground Sign

StructureType = **2**

$\phi_{ot} := if(StructureType = 3, 0.8, 0.6)$ $\phi_{ot} = 0.6$ *ϕ factor against overturning [SM Vol-3 13.6.1.1]*

$\phi_{tor} := if(StructureType = 0, 0.9, 1.0)$ $\phi_{tor} = 1$ *ϕ factor against torsion [SM Vol-3 13.6.1.1]*

Shaft Depth Required to Resist Overturning

$M_u := \sqrt{M_x^2 + M_z^2} = 6.6 \cdot kip \cdot ft$

$P_u := \sqrt{V_x^2 + V_z^2} = 0.7 \cdot kip$

$T_u := Torsion = 0 \cdot kip \cdot ft$

*short free-head pile in **cohesionless soil** using Broms method*

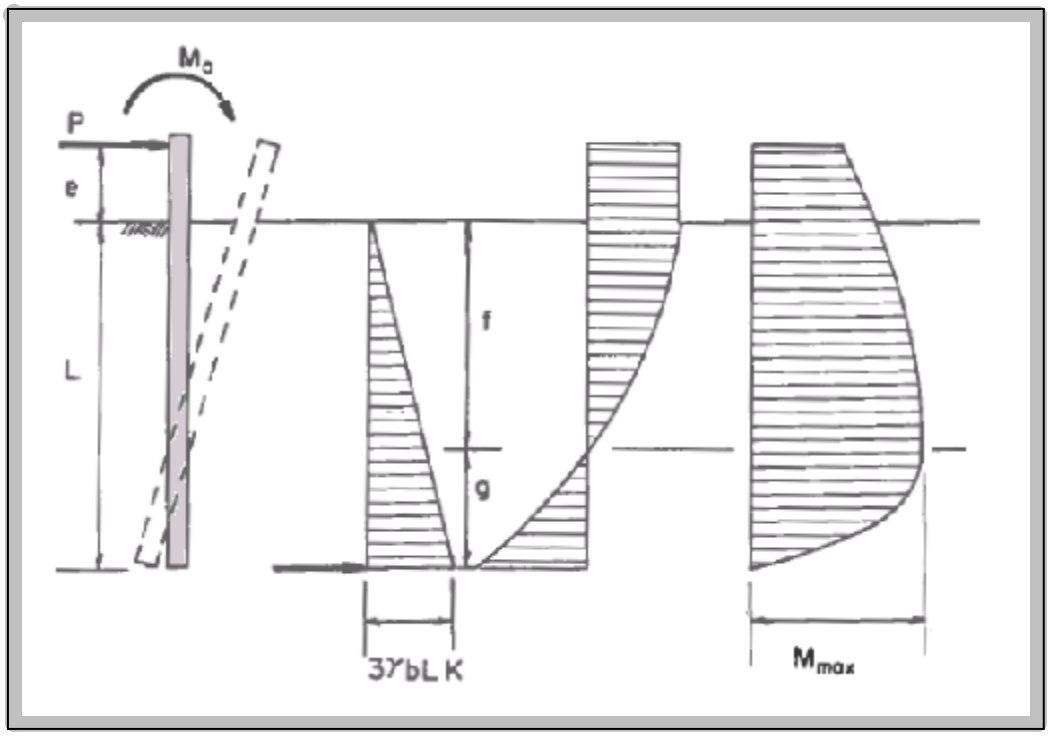

Deflection, load, shear and moment diagram for a short pile in cohesionless soil that is unrestrained against rotation.

$K_p := \tan\left(45 \cdot deg + \frac{\phi_{soil}}{2}\right)^2 = 2.5$ $\quad e_{sand} := Offset = 0$

Guess value $\quad L_{otSand} := 8 \cdot ft$

Given $\quad P_u \cdot (e_{sand} + L_{otSand}) + M_u = \phi_{ot} \cdot \left[(3 \cdot \gamma_{soil} \cdot b \cdot L_{otSand} \cdot K_p) \cdot \left(\frac{1}{2} \cdot L_{otSand}\right) \cdot \left(\frac{1}{3} \cdot L_{otSand}\right) \right]$

$L_{otSand} := Find(L_{otSand}) = 5.7\,ft$

$L_{otSand} := ceil\left(\frac{L_{otSand}}{ft}\right) \cdot ft = 6\,ft$ $\quad$ *(round up to next foot)*

*short free-head pile in **cohesive soil** using Modified Broms method for L < 3b (see reference file for derivation)*

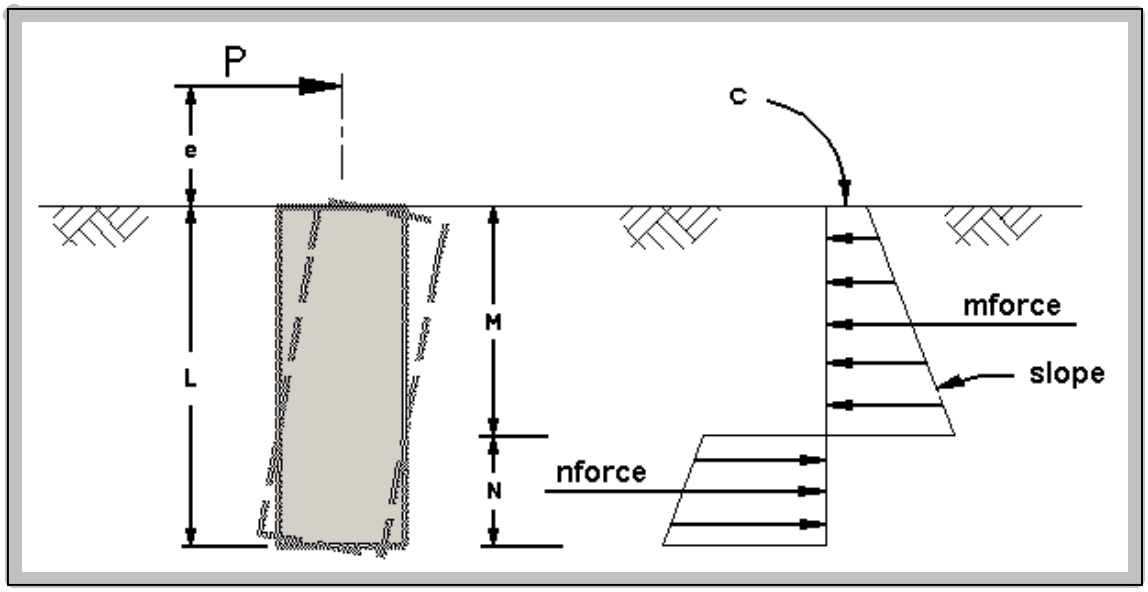

Deflection, load, shear and moment diagram for a short pile in cohesive soil that is unrestrained against rotation.

$c_{soil} := if\left(c_{soil} = 0 \cdot ksf, 0.1 \cdot ksf, c_{soil}\right) = 2 \cdot ksf$

$Slope := 8 \cdot \frac{c_{soil}}{3 \cdot b} = 2.7 \cdot \frac{kip}{ft^3}$

$e_{clay} := \frac{M_u}{P_u} + Offset = 9.2\,ft$

$nforce(M, N) := \left[Slope \cdot (2 \cdot M + N) + 2 \cdot c_{soil}\right] \cdot N \cdot \frac{b}{2}$

$mforce(M) := \left(2 \cdot c_{soil} + M \cdot Slope\right) \cdot M \cdot \frac{b}{2}$

$m\_arm(M) := e_{clay} + \frac{M}{3} \cdot \frac{2 \cdot \left(M \cdot Slope + c_{soil}\right) + c_{soil}}{M \cdot Slope + 2 \cdot c_{soil}}$

$n\_arm(M, N) := e_{clay} + M + \frac{N}{3} \cdot \frac{2 \cdot \left(N \cdot Slope + M \cdot Slope + c_{soil}\right) + \left(M \cdot Slope + c_{soil}\right)}{Slope \cdot (2 \cdot M + N) + 2 \cdot c_{soil}}$

Guess value $M := 4.0 \cdot ft$ $N := 4.0 \cdot ft$

Given $P_u + \phi_{ot} \cdot nforce(M, N) = \phi_{ot} \cdot mforce(M)$ $mforce(M) \cdot m\_arm(M) = nforce(M, N) \cdot n\_arm(M, N)$

$\begin{pmatrix} M \\ N \end{pmatrix} := Find(M, N)$ $L_{ot1Clay} := M + N = 2.3\,ft$

$L_{ot1Clay} := ceil\left(\frac{L_{ot1Clay}}{ft}\right) \cdot ft = 3\,ft$ *(round up to next foot)*

*short free-head pile in **cohesive soil** using Regular Broms method for L > 3b*

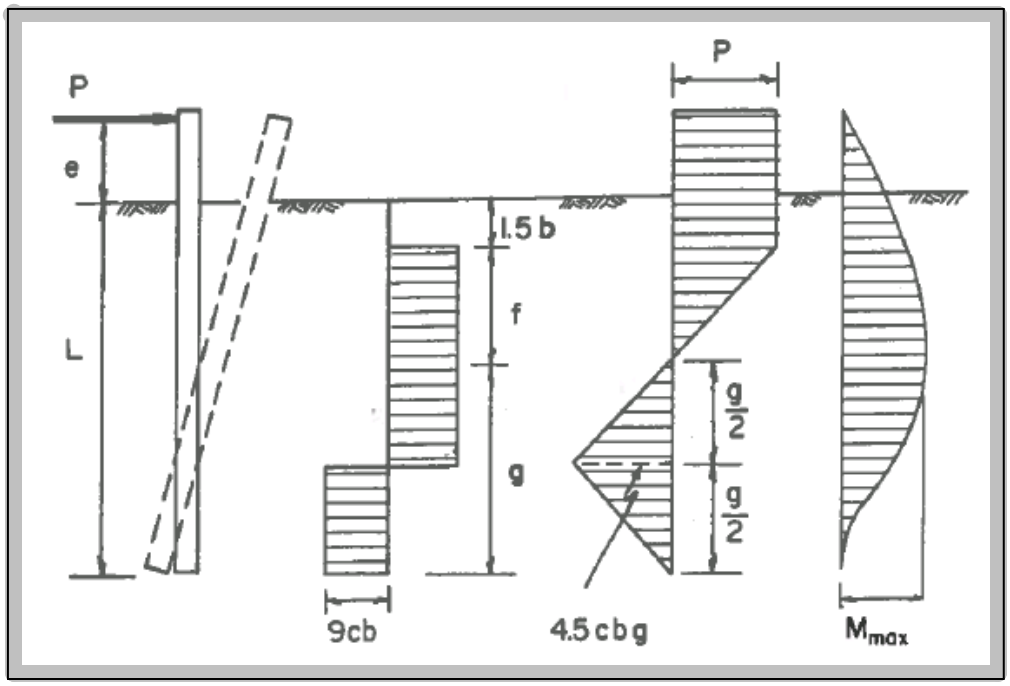

Deflection, load, shear and moment diagram for a short pile in cohesive soil that is unrestrained against rotation.

$M_{max.clay}$ *equation is derived from the integration of the upper part of the shear diagram to the point of zero shear.*

$$f := \frac{P_u}{\phi_{ot} \cdot 9 \cdot c_{soil} \cdot b} = 0 \text{ ft}$$

$$M_{max.clay} := P_u \cdot \left(e_{clay} + 1.5 \cdot b + 0.5 \cdot f\right) = 8.8 \cdot \text{kip} \cdot \text{ft}$$

$$g := \sqrt{\frac{M_{max.clay}}{2.25 \cdot \phi_{ot} \cdot c_{soil} \cdot b}} = 1.3 \text{ ft}$$

$$L_{ot2Clay} := (1.5 \cdot b + f + g) = 4.3 \text{ ft}$$

$$L_{ot2Clay} := \text{ceil}\left(\frac{L_{ot2Clay}}{\text{ft}}\right) \cdot \text{ft} = 5 \text{ ft}$$ *(round up to next foot)*

$$L_{otClay} := \text{if}\left(L_{ot1Clay} < 3 \cdot b, L_{ot1Clay}, L_{ot2Clay}\right) = 0.9$$ *(If L_{ot} < 3b, use Modified Broms method)*

$$L_{reqdOT} := \text{if}\left(\text{SoilType} = \text{"Sand"}, L_{otSand}, L_{otClay}\right)$$

$L_{reqdOT} = 6$ ft *required shaft embedment depth to resist overturning*

Shaft Depth Required to Resist Torsion

*short free-head pile in **cohesionless soil***

NOTE: ω_{fdot} is based upon concrete soil interaction. This torsion methodology is not to be used with permanent casing.

$N_{blows} = 5$

$\omega_{fdot} := 1.5 \cdot \frac{N_{blows}}{15} = 0.5$

load transfer ratio, If 5<N<15, ω_{fdot} is reduced by a factor of $\frac{N_{blows}}{15}$ *SM Vol-3 13.6*

Guess value $L_{torSand} := L_{reqdOT} = 6\ ft$

Given $T_u = \phi_{tor} \cdot \left[\pi \cdot b \cdot \left(L_{torSand} \right) \cdot \gamma_{soil} \cdot \left(\frac{L_{torSand}}{2} \right) \cdot \left(\omega_{fdot} \right) \cdot \frac{b}{2} \right]$

$L_{torSand} := \text{Find}\left(L_{torSand} \right) = 0\ ft$

$L_{torSand} := \text{ceil}\left(\frac{L_{torSand}}{ft} \right) \cdot ft = 1\ ft$ *(round up to next foot)*

*short free-head pile in **cohesive soil***

$\text{CohesionFactor} := 0.55$

$f_{se} := \text{CohesionFactor} \cdot c_{soil} = 1.1 \cdot ksf$

Guess value $L_{torClay} := L_{reqdOT}$

Given $T_u = \phi_{tor} \cdot \left[f_{se} \cdot (\pi \cdot b) \cdot \left(L_{torClay} - 1.5 \cdot ft \right) \cdot \frac{b}{2} \right]$

$L_{torClay} := \text{Find}\left(L_{torClay} \right) = 1.5\ ft$

$L_{torClay} := \text{ceil}\left(\frac{L_{torClay}}{ft} \right) \cdot ft = 2\ ft$ *(round up to next foot)*

$L_{reqdTor} := \text{if}\left(\text{SoilType} = \text{"Sand"}, L_{torSand}, L_{torClay} \right)$

$L_{reqdTor} = 1\ ft$ *required shaft embedment depth to resist torsion*

$L_{embedded} := \text{if}\left(L_{reqdTor} > L_{reqdOT}, L_{reqdTor}, L_{reqdOT} \right) = 1.8$

$L_{shaft.length} := L_{embedded} + \text{Offset}$

$L_{shaft.length} = 6\ ft$ *shaft length*

HDPE TECHNICAL DATA & AVAILABLE SIZES

American Plastic Lumber, Inc

Largest selection of colors, sizes, and grades available
Premium, structural, utility and sheet goods
50 year limited warranty

About Us | Furniture Order Form | ContactUs

HDPE Decking

Technical Data

DESCRIPTION

APL's HDPE products are made of high-density polyethylene (HDPE), UV-inhibited pigment systems, foaming compounds and selected process additives.

The HDPE raw material is derived from post-consumer bottle waste, such as milk and detergent bottles. This material is cleaned in APL Building Product's decontamination process to a high purity level, which removes contaminants such as food residue, paper, and adhesives. It is then compounded into a rigid board stock material, with the resulting finished product containing over 90% recycled plastic by weight.

Because HDPE products are made with a single, purified polymer, they are manufactured to exacting, reproducible specifications. They have exceptional resistance to corrosive substances, oils and fuels, insects, fungi, salt spray, and other environmental stresses. They do not absorb moisture; therefore, they will not rot, splinter, or crack.

HDPE products are manufactured in many dimensional lumber sizes, shapes, and colors. Planks, posts, rails, balusters, tongue and groove, groove and groove, and many specialty profiles are available. The products come in many wood tones and popular colors, including Sand, Weathered Wood, Light Gray, Cedar, Redwood, and White.

HDPE products have excellent weathering resistance; however, as with other polyolefins, it is possible that the material will fade slightly over the service life of the product. These products require no waterproofing, painting, staining, or similar maintenance when used in many exterior applications.

BASIC USES

HDPE products are used in many conventional wood lumber applications and are often the products of choice for exterior applications where weathering resistance and low maintenance are required.

Used in both residential and municipal applications, HDPE products are well suited for decking, porch flooring, docks, piers, furnishings, fencing, and lawn and garden items. HDPE products are cost-effective alternatives for ground contact and animal contact, wet, and environmentally harsh conditions.

Mechanical Properties @ 70°F	Test Method	Average Value...
Modulus of elasticity (@ 1% strain)	ASTM D6109	114,000 psi
Ultimate flexural stress (@ 3% strain)	ASTM D6109	2300 psi
Allowable flexural stress	ASTM D6109	1200 psi
Endwise compressive stress (@ 3% strain)	ASTM D6108	1740 psi
Screw withdrawal #10, 1 1/2"	ASTM D6117 7	90 lbs
Water absorption, 11 weeks	ASTM D570	Less than 0.1%
Coefficient of thermal expansion	ASTM D6341	.000055 in/in/°F
Density	ASTM D6111	.024 - .027lbs/ cu in*

LIMITATIONS

This type of product has less rigidity (modulus of elasticity) and greater elongation than wood lumber. Therefore, it is not recommended for use as a true structural member. Examples of applications that are inappropriate would be load-bearing walls, deck framing, and floor joists. It is recommended that an engineering study be performed prior to use of HDPE products if the application involves structural requirements. For commercial applications where the system design calls for concentrated loads, APL's Structural Lumber should be considered.

When utilizing HDPE products for decking or flooring, careful attention must be paid to joist spacing; joist spans will depend upon which HDPE deck board is installed. Multiple-span data at 120°F or less are presented here:

Allowable Live Load (psf), Multiple Spans, at 120°F or less

Deflection Limit	12" Span	16" Span	19.2" Span	24" Span
1 X Decking Board (*t* = 0.75)				
1/360	85	-	-	-
1/240	128	54	-	-
1/180	171	72	-	-
5/4 G & G/C Deck Board (*t* = 1.25)				
1/360	235	99	57	-
1/240	353	149	86	-
1/180	470	198	115	-
2 X Decking Board (*t* = 1.50)				
1/360	749	316	183	94
1/240	1124	474	274	140
1/180	1498	632	366	187

Note: Table provides limiting uniform load in pounds per square foot (psf) based on noted deflection criteria. Recommended standard is to limit live load deflection for floors to 1/360 and to limit total deflection (dead + live load) to 1/240. Designers may choose less restrictive or more restrictive criteria for a given application. Except for very unusual and heavy loading, deflection criteria will control allowable plank span. Deflection determination is based on the secant modulus of elasticity measured at 1% strain at 70°F in accordance with published data. Multiple span data assume uniform load is present on three spans (deflection = .0069wL4/EI). This formulation is consistent with and slightly more conservative than the plank span data promulgated by the Western Woods Product Association and others. Multiple span values are applicable to plank continuous over at least two spans.

INSTALLATION

HDPE products can be fabricated and installed with the same tools used to work wood lumber. The product will cut and drill very cleanly, as there is no grain to split or chip. It is not necessary to pre-drill the plastic lumber when fastening. Stainless steel or coated decking nails and screws are recommended for use with HDPE products. Screws are recommended for use with HDPE products. Screws offer the best form of attachment; however, nails and staples may also be utilized in some applications. See recommended fastener configurations and minimum screw sizes per the following table:

Deck Board Member	Recommended Fastening System
2 x 6 5/4, G&G/C-deck	Direct Screw Direct Screw G & G

Fastening System	Screw Type (All Stainless Steel or Coated Recommended
Direct Screw Down	2 x 6: #10, 2 3/4" flat head, min.; G&G/C-deck, 5/4 x 6: #8, 2 1/2" flat head, min.
G&G or T&G	G&G: #7, 1 7/8 trim head into joist; T&G: #6 or #8, 2" deck screw , min.
EC-Clip for Stair Tread	Two 1 7/8 bugle head screws into joist and one 1" wood screw into bottom of overhang board
1 x 6	Direct Screw

The use of full length boards is suggested to avoid unattractive butt-to-butt joints. If the deck is longer than the boards, feature strips or T-molding may be used. Because of its recycled nature and the mechanical properties of plastic, both color variation and contraction are inherent in the product. For complete installation instructions, including HDPE railing, consult the full APL Decking System Installation Guide on www.american-plasticlumber.com.

Note: In direct sunlight, darker colors absorb more heat and may exaggerate expansion and contraction. It is recommended that lighter colors be used in these applications.

WARRANTY

HDPE products come with a transferable 50-year limited warranty. The product is warranted against termites and fungal decay for a period of 50 years. The product is also warranted not to rot, split, splinter or check for a period of 10 years. The material will be replaced if the product does not perform as stated. Contact American Plastic Lumber for specific limited warranty coverage.

MAINTENANCE

HDPE products are unaffected by most corrosive substances and will not absorb moisture. To maintain its beauty, clean the lumber with soap and water. No water sealing or painting is required; as a general rule, paint will not adhere to HDPE products.

Graffiti can be cleaned from the plastic lumber with the use of a conventional all-purpose cleaner or petroleum-based cleaner.

If the skin or surface layer of an HDPE product becomes marred or blemished, it is possible to sand off the top skin. The surface can also be buffed to eliminate abrasions.

ADDITIONAL INFORMATION

HDPE products are impervious to paint and most adhesives; therefore, these materials are not recommended for use.

HDPE products have been tested by Underwriters Laboratories for use in outdoor applications. The product has a melt temperature of Approximately 270°F and a flash point of approximately 620°F. It has a higher flashpoint than wood, and it must be exposed to a severe Combustion source for a longer period than wood to ignite the product. But like wood, when exposed to a combustion source for a long enough period, it will burn. Should a flame occur, extinguishing media should be dry chemical, foam, carbon dioxide, or water spray; water should be applied from a fogging nozzle.

HDPE products have been tested under repeated hygrothermal conditions (freezing, thawing and wet conditions) as established by the ASTM and are proven to maintain their mechanical properties. HDPE products comply with the code requirements as outlined in ICC Legacy Evaluation Report 97-63.1. HDPE has also completed evaluation by HUD for decking and railing applications (see HUD MR #1306).

TECHNICAL SERVICES

Technical service is available from American Plastic Lumber at 877.677-7701 by fax at 530.677-6718, or visit our website at www.american-plasticlumber.com.

HDPE products offer multiple deck board attachment options to accommodate expansion and contraction concerns in different climatic conditions and to address specific installation parameters.

These options include:

- Tongue & groove deck board attachment with toe screwing options.
- Direct screw attachment with feature strip or T-mold options.
- Floating attachment with EC Clip options.
- Floating attachment with groove & groove options.

For comprehensive and up-to-date deck installation details, please visit www.american-plasticlumber.com.

SIZES

HDPE products are manufactured in continuous extrusions and can be made to virtually any length. Popular dimensional lumber profiles are stocked in 8', 12', 16' and 20' lengths.

Cross sections include:

- 1/2 x 1 1/2
- 1/2 x 2 1/2
- 1 1/2 x 1 1/2
- 4 x 4
- 1 x 6
- T & G
- L Molding
- T Molding
- Handrail
- Spindles

Other profiles are available by contacting American Plastic Lumber customer service

TX TURF GATOR UTILITY VEHICLE SPECS

Enns Brothers

McGillivray @ the Perimeter
, MB (Manitoba) R2J0V1
Call Us: (204) 895-0212
http://www.ennsbrothers.com/

2022 JOHN DEERE 4-PASSENGER GATOR™ XUV590E S4

SELLING PRICE - CLICK FOR A QUOTE



INFORMATION

2022 JOHN DEERE 4-PASSENGER GATOR™ XUV590E S4

- Multi-passenger capability for four people
- Easier shifting, with integrated park position
- New electronic switch for instant 4WD engagement
- Convertible rear seat for extra storage

Features may include:

Precision-engineered drive system optimizes acceleration, hauling, towing, and hill-climbing capabilities

- The Gator™ XUV Mid-Size Crossover Series Utility Vehicles have a precision-engineered drivetrain system that fully utilizes engine power, optimizing acceleration, hauling, towing, and hill-climbing capabilities. Power is transmitted from the engine through a continuously variable clutch system to the transaxle.
- Key elements of the drive system include:
- VARIABLE-SPEED DRIVE

- The variable-speed drive consists of two clutches and a drive belt:
- Drive clutch is attached to the engine.
- Driven clutch is attached to the transaxle.
- Ability to creep along slowly to maneuver in tight spaces
- Standard full-clutch enclosure with a high intake and exhaust ensures a dry belt when crossing water
- High-speed fan on drive clutch provides longer belt and clutch life by keeping components cool
- TEAM® industry clutches provide high performance and longevity
- How the variable-speed drive works:
- As engine speed increases, the spring-loaded drive clutch is closed by weights being forced out by centrifugal force.
- As the drive clutch closes, the belt rides up to the largest diameter of the drive clutch and forces open the driven clutch.
- With the belt running in the smallest diameter of the driven clutch, the speed being transferred to the transaxle is increased.
- The driven clutch is designed to sense varying loads (inclines, mud, etc.) and constantly adjusts drive speed upward or downward so that engine rpm remains optimal.
- 4WD
- Selectable 4WD system with a limited slip front differential and dash-mounted electronic rocker switch
- Provides exceptional traction in challenging conditions
- Maintains turf-friendly operation in two-wheel drive (2WD) mode
- Combined with rear traction assist (differential lock), provides excellent traction in challenging conditions
- More control descending hills with 4WD engaged, as all four wheels help slow the vehicle down
- Clutch engagement still necessary to prevent free coasting
- Transaxle
- Low, high, neutral, reverse, and park transaxle
- Automotive-style, integrated park position in transmission
- To shift out of park, service brake must be pressed to release the parking solenoid. An audible click will be heard and allows the vehicle to shift out of park into the desired gear.
- Low range for maximum torque delivered to the wheels for hauling, pushing, and pulling
- High range for maximum vehicle speed
- Cast-aluminum design for lower weight
- Helical forward and reverse gears are used for quiet operation
- Rear traction assist (differential lock) is controlled with an electronic rocker switch
- NOTE: Locked differential design may increase scuffing of the turf during turns because the rear wheels are turning at the same speed through a turn.
- Contains gear-case for transferring power to the MFWD
- Splined shaft interfaces for maximum torque transfer and durability
- All drive gears machined from highest grade gear steel

PHOTOS

HIGHLIGHTS

- **Location** Call for Availability
- **Condition** New
- **Year** 2022
- **Make** John Deere
- **Model** 4-Passenger Gator™ XUV590E S4
- **Color** Green & Yellow
- **Engine** 4 Cycle Liquid Cooled
- **Horsepower** 32HP
- **Transmission** CVT
- **Fuel Type** Gas
- **Status** Available
- **Width** 56.5 in. (1435 mm)
- **Height** 74 in. (1880 mm)
- **Drive** 4WD
- **Payload Capacity** 500 lbs
- **Towing Capacity** 1500 lbs

SPECIFICATIONS

2022 John Deere 4-Passenger Gator™ XUV590E S4	
Year	**2022**
Manufacturer	**John Deere**
Model Name	**4-Passenger Gator™**
Trim Name	**XUV590E S4**
Generic Type (Primary)	**Utility**
Engine	
Engine Type	**V-twin**
Displacement	**586 cc**
Engine Power	**32 hp (23.8 kW)**
Cooling System	**Liquid cooled**
Fuel System	
Fuel Injection	**Electronic**
Drivetrain	
Transmission	**Continuously Variable Transmission (CVT) with clutch enclosure**
Final Drive	**Park, high, low, neutral, reverse transaxle**
Drive System	**Four wheel drive: Dash switch actuated four-wheel drive system with limited slip front differential, plus locking rear differential**
Differential Lock	**Traction assist: Positive locking, switch actuated rear differential lock**
Suspension	**Front: Fully independent dual A-arm with adjustable coil over shocks, 203 mm (8 in.) travel, anti-roll bar | Rear: Fully independent with lower A-arm and upper camber link with adjustable coil over shocks, 203 mm (8 in.) travel**
Brakes	
Brake System Type	**196 mm (7.7 in.) ventilated four-wheel stainless steel disc brakes with hydraulic 34.93 mm (1.375 in.) diameter twin-piston calipers**
Parking Brake	**Park in-transmission**
Wheels & Tires	
Tires, Rear Specification	**25x8-12 Terrahawk AT (All Terrain) 4-ply rating steel wheels, various colors or 26x8-14 Maxxis® Bighorn® 2.0 6-ply rating aluminum alloy wheels, various colors or 26x8-14 Maxxis Bighorn 2.0 6-ply rating steel wheels, various colors**

Tires, Front Specification	**25x10-12 Terrahawk AT (All Terrain) 4-ply rating steel wheels, various colors or 26x10-14 Maxxis Bighorn 2.0 6-ply rating aluminum alloy wheels, various colors or 26x10-14 Maxxis Bighorn 2.0 6-ply rating steel wheels, various colors**
Battery	**340 CCA**
Electric	
Alternator	**65 amp @ 3400 rpm regulated**
Electrical	**Power port: 12 VDC standard outlet**
Hitch/Type	**Standard 2 in. (50 mm) rear receiver**
Dimensions	**Tread centers Front: 48 in. (1220 mm) / rear: 46 in. (1168 mm) | Cargo box: 32.3 x 47.6 x 11.7 in. (82 x 120.9 x 29.7 cm)**
Wheelbase	**108 in. (2743 mm)**
Length	**144 in. (3658 mm)**
Width	**56.5 in. (1435 mm)**
Height	**74 in. (1880 mm)**
Ground Clearance	**Minimum: 9.3 in. (236 mm)**
Capacities	
Fuel Capacity	**7.4 U.S. gal. (28 L)**
Cargo Capacity	**Box: 8.9 cu ft (0.25 m3)**
Box Capacity	**Cargo capacity (weight): 500 lb (227 kg)**
Payload Capacity	**1200 lb (544 kg)**
Towing Capacity	**1500 lb (680 kg)**
Weights	
Weight	**Wet weight (includes fuel/fluids): 1646 lb (746 kg)**
Features	**Instrumentation: Digital display (gear position, system diagnostic light, speed, rpm, 4WD indicator, rear differential indicator, fuel level, coolant temperature, hour meter, miles, and service interval warning light) | Storage: Two cupholders, sealed underhood storage, glovebox, center console | Seating: Bench seat front/rear**
drive	**4WD**
payload capacity	**500**
towing capacity	**1500**

Josue Herrera

From: Hale, Mike <HaleMike@stanleygroup.com>
Sent: Monday, December 5, 2022 3:02 PM
To: Bassel Kassem; Josue Herrera
Cc: O'Neill, Karen
Subject: FW: 439865-3-34-01 SJR2C Loop Trail SUN Trail - City of Port Orange - Maintenance Vehicle Access to Boardwalk
Attachments: RE: RE: [EXT] RE: 439865-3-34-01 SJR2C Loop Trail SUN Trail - City of Port Orange - Maintenance Vehicle Access to Boardwalk

Bassel / Josue,

See attached load confirmation from City Parks & Rec, but then question below regarding other loads that would seem to exceed the 2,000 lbs max (dry weight + payload) you have accounted for previously. Let me know what changes this necessitates, and if we need to drill down into things further with the City.

Thanks,

Mike Hale, P.E., Transportation Department Manager
STANLEYCONSULTANTS,80 Spring Vista Drive, DeBary, FL 32713
T: 386.753.7106 | M: 386.547.4535 | stanleyconsultants.com

From: Epstein, Lisa <lepstein@port-orange.org>
Sent: Monday, December 5, 2022 2:42 PM
To: Hale, Mike <HaleMike@stanleygroup.com>; O'Neill, Karen <O'NeillKaren@stanleygroup.com>
Cc: Tomlinson, Margaret <mtomlinson@port-orange.org>
Subject: 439865-3-34-01 SJR2C Loop Trail SUN Trail - City of Port Orange - Maintenance Vehicle Access to Boardwalk

***** EXTERNAL EMAIL - Use caution and verify authenticity before trusting any contents. *****

Hi Mike & Karen – Thanks again for your time in our TEAMS call last Friday morning and the opportunity to review several aspects of design progress on this project.
We have confirmed the use of a Gator-type vehicle. In our additional research, it appears that the largest Gator weighs 1646 lbs, including fuel and fluids, and has a payload capacity of 1400 lbs.
Just thinking about the weight of the vehicle, 2 adults, ladder, tools, materials.
Perhaps the structural engineers have already built in enough load compensation. Should we ask for confirmation that the design will meet these total live load estimates?

Lisa Epstein
Engineering Project Manager
Community Development
Lepstein@port-orange.org
Phone (386) 506-5667

From: Hale, Mike <HaleMike@stanleygroup.com>
Sent: Friday, December 2, 2022 11:08 AM
To: Epstein, Lisa <lepstein@port-orange.org>; Tomlinson, Margaret <mtomlinson@port-orange.org>
Cc: O'Neill, Karen <O'NeillKaren@stanleygroup.com>; Bassel Kassem (BKassem@flbridge.com)

BRIDGE GEOMETRY

BOARDWALK BENT LOCATIONS		
BENT NUMBER	STATION	TOP OF DECK ELEVATION
BENT NO. 1	29+64.89	10.25
BENT NO. 2	29+74.89	10.25
BENT NO. 3	29+84.89	10.25
BENT NO. 4	29+94.89	10.25
BENT NO. 5	30+04.89	10.25
BENT NO. 6	30+14.89	10.25
BENT NO. 7	30+24.89	10.25
BENT NO. 8	30+34.89	10.25
BENT NO. 9	30+43.11	10.25
BENT NO. 10	30+53.93	10.25
BENT NO. 11	30+64.75	10.25
BENT NO. 12	30+75.57	10.25
BENT NO. 13	30+86.39	10.25
BENT NO. 14	30+96.39	10.25
BENT NO. 15	31+06.39	10.25
BENT NO. 16	31+16.39	10.25
BENT NO. 17	31+26.39	10.25
BENT NO. 18	31+36.39	10.25
BENT NO. 19	31+46.39	10.25
BENT NO. 20	31+56.39	10.25
BENT NO. 21	31+66.39	10.25
BENT NO. 22	31+76.39	10.25
BENT NO. 23	31+86.39	10.25
BENT NO. 24	31+96.21	10.25
BENT NO. 25	32+07.03	10.25
BENT NO. 26	32+17.86	10.25
BENT NO. 27	32+28.68	10.25
BENT NO. 28	32+39.50	10.25
BENT NO. 29	32+48.37	10.25
BENT NO. 30	32+58.37	10.25
BENT NO. 31	32+68.37	10.25
BENT NO. 32	32+78.37	10.25
BENT NO. 33	32+88.37	10.25
BENT NO. 34	32+98.37	10.25
BENT NO. 35	33+08.37	10.25
BENT NO. 36	33+18.37	10.25
BENT NO. 37	33+28.37	10.25
BENT NO. 38	33+38.37	10.25
BENT NO. 39	33+48.37	10.25
BENT NO. 40	33+58.37	10.25
BENT NO. 41	33+68.37	10.25
BENT NO. 42	33+78.37	10.25
BENT NO. 43	33+88.37	10.25
BENT NO. 44	33+98.37	10.25
BENT NO. 45	34+08.37	10.25

BOARDWALK BENT LOCATIONS		
BENT NUMBER	STATION	TOP OF DECK ELEVATION
BENT NO. 46	34+18.37	10.25
BENT NO. 47	34+28.37	10.25
BENT NO. 48	34+38.37	10.25
BENT NO. 49	34+48.37	10.25
BENT NO. 50	34+58.37	10.25
BENT NO. 51	34+68.37	10.25
BENT NO. 52	34+78.37	10.25
BENT NO. 53	34+88.37	10.25
BENT NO. 54	34+98.37	10.25
BENT NO. 55	35+08.37	10.25
BENT NO. 56	35+18.37	10.25
BENT NO. 57	35+28.37	10.25
BENT NO. 58	35+38.37	10.25
BENT NO. 59	35+48.37	10.25
BENT NO. 60	35+58.37	10.25
BENT NO. 61	35+68.37	10.25
BENT NO. 62	35+78.37	10.25
BENT NO. 63	35+88.37	10.25
BENT NO. 64	35+98.37	10.25
BENT NO. 65	36+08.37	10.25
BENT NO. 66	36+18.37	10.25
BENT NO. 67	36+28.37	10.25
BENT NO. 68	36+38.37	10.25
BENT NO. 69	36+48.37	10.25
BENT NO. 70	36+58.37	10.25
BENT NO. 71	36+68.37	10.25
BENT NO. 72	36+78.37	10.25

QUANTITIES

Treated Timber, HDPE and Timber Piling Quantities

FLORIDA BRIDGE AND TRANSPORTATION, INC				
	Project Name:	SJR2C LOOP TRAIL	Made By: ADB	Date: 3/26/2024
	Project Number:	FBT 21-31.01	Checked By: DAB	Date: 3/26/2024

Decking Quantity

Width	5.5	in	
Height	1.5	in	
Number/Span	21.333		(Includes 1/8" gaps)
Each Length	8	ft	
Quantity/span	170.667	ft	70 spans + 20in
	0.117	MB	

Total Deck Quantity	8.23	MB

Bent Caps - Total Bridge Length

			Light Post Cap Beams	
Width	3.5	in	3.5	in
Height	11.25	in	11.25	in
Number	131		9	
Each Length	9.33	ft	10.00	ft
Quantity	1312.667	ft		
	4.307188	MB		

Total Cap Quantity	4.31	MB

Joists per 10-ft span

					Splice Block (7 ea bent)		
Width	1.5	in					
Height	11.25	in			Width	1.5	in
Number	7				Height	11.25	in
Each Length	10.00	ft			Number	483	
					Each Length	2.500	ft
Quantity	70.00	ft	70 spans +20in		Quantity	1207.500	
	0.098438	MB	6.891	MB		1.698	MB

Total Joist Quantity	8.60	MB

Bridge

HDPE Railing cap (2 rails)		Horizontal Railing (4 rails per side)		Vertical Railing Posts		Boards at Railing Posts	
Width	1.5 in	Width	1.5 in	Width	5.5 in	Width	1.5 in
Height	7.25 in	Height	7.25 in	Height	5.5 in	Height	9.25 in
Number	2	Number/side	4	Number	282	Number	140
RT Railing Length	700.000 ft	RT Railing Length	700.000 ft	Each Length	5.500 ft	Each Length	1.500 ft
LT Railing Length	700.000 ft	LT Railing Length	700.000 ft				
Quantity	1400.000 ft	Quantity	5600.000 ft	Quantity	1551 ft	Quantity	210 ft
	1.269 MB		5.075 MB		3.910 MB		0.243 MB

Vertical Light Post	
Width	5.5 in
Height	5.5 in
Number	9
Each Length	13.000 ft
Quantity	117.000 ft
	0.295 MB

Railing Total for Bridge Area	10.8	MB

Piling

Bent	Pile Area (avg dia = 10.72") (min = 9.4")		Cut-Off EL. (Ft)	Estimated Tip EL.	Length	Number of Piles	Quantity (MB)
1 thru 70	90.206	in^2	9.188	-24	33.188	140	34.93
Avg Diameter*	10.717		Average production pile length		35.00		
Avg Diameter test	10.717						

Piling Total	34.9	MB

* Per Spec 953-2, the natural taper of Southern Pine is approximately 0.085 in/ft through up to 50' in length.

GRAND TOTAL FOR ALL TIMBER

66.8	**MB**

COST ESTIMATE

Cost of HDPE			2 x 6 cost per attached from AZTEC Website - supplier of Plastic Lumber			
	1400	LF	Cost per LF	$	5.74	(Assumes Gray or Brown color)
$	8,036.00	material cost		$	12,054.00	Material cost plus installation

INSTALLATION COST ASSUMED 50% OF MATERIAL COST

Timber Cost						
	65.53	MB	Cost Per MB	$	15,027.64	(Statewide 6 mo. Average)
				$	984,780.03	Material cost plus installation

Total Cost =	$	996,834.03
Add 10% Contingency=	$	1,096,517.44

SUMMARY OF STRUCTURE QUANTITIES

SECTION	PAY ITEM NO.	PAY ITEM DESCRIPTION	LOCATION	UNIT	QUANTITY		TOTAL		DESIGN NOTES	CONSTRUCTION REMARKS
					P	F	P	F		
TIMBER PEDESTRIAN BRIDGE	0470 1	TREATED TIMBER, STRUCTURAL	DECKING	MB	8.23		66.9			
			JOISTS		8.60					
			CAP		4.31					
			RAILING		10.80					
			PILING		34.93					

FLORIDA SURETY BONDS, INC.

620 N Wymore Road Suite 200
Maitland, FL 32751
(407) 786-7770 ♦ Fax (407) 786-7766

Toll Free (888) 786-BOND
www.FloridaSuretyBonds.com
Kim@FloridaSuretyBonds.com

July 3, 2025

City of Port Orange, Florida
1000 City Center Circle
Port Orange, FL 32129

RE: Masci General Contractor, Inc.
Project: ITB #25-13; SJR2C Loop Trail, Port Orange, Florida

To Whom It May Concern:

We have been the surety agents for Masci General Contractor, Inc., since 2001. Bonds are currently written through Arch Insurance Company located at Harborside 3, 210 Hudson St., #300, Jersey City, NJ 07311-1107, which is Best Rated "A+, XV" and has a Treasury Listing of $244,239,000.

We anticipate no difficulties in providing surety bonds for Masci General Contractor, Inc., for projects in the $125,000,000 single, $200,000,000 aggregate range. This letter is not a commitment to provide any bonds unless all underwriting requirements including contract review are met prior to issuing any bonds. Neither our agency, nor the surety are liable for any damages relating to this letter or project.

We are pleased to be working with a contractor of this caliber. Should you award a contract to Masci General Contractor, Inc., we are sure you will be pleased with their ability to perform and willingness to cooperate.

Should you have any questions, please do not hesitate to contact us.

Sincerely,

Kim E. Niv

Kim Niv
Vice President

Largent, Sandra

From: Epstein, Lisa
Sent: Thursday, August 7, 2025 2:32 PM
To: Largent, Sandra
Subject: FW: Bid Tab & Notice of Intent
Attachments: ITB #25-13 Bid Tabulation.xlsx; ITB #25-13 NOTICE OF INTENT TO AWARD .docx

From: Poolman, Jill <jpoolman@port-orange.org>
Sent: Monday, July 7, 2025 1:26 PM
To: Tomlinson, Margaret <mtomlinson@port-orange.org>; Epstein, Lisa <lepstein@port-orange.org>
Cc: Castro, Joseph <jcastro@port-orange.org>; Yongue, Johnnie <jyongue@port-orange.org>
Subject: Bid Tab & Notice of Intent

Margaret,

I've attached the files containing the bid tabulation (both full and what will be published) and the draft Notice of Intent. Below is the link to the bid submittals. Please note that there were 2 bidders that didn't provide with their submittals their current bonding capacity letters as the bid requires, however they supplied them on 7/3 and both are included in their submittal folders in the link. Also, as we previously discussed, I have not included All State's submittal in the folder as their electronic submittal consisted of several documents (1 page for each form) and not one file containing all documents, in addition to them being deemed non-responsive.

On the full bid tab, the yellow highlighted Extended Price amounts for Masci are amounts that seemingly were incorrectly rounded by Masci on their submittal, but corrected amounts are shown on our bid tab. As you know, we are able to correct extended amounts. The total difference in their Grand Total vs. the correct Grand Total is 19 cents.

Please let me know if you have any questions.

Bid Submittals for ITB #25-13

Jill Poolman, NIGP-CPP, CPPO, CPPB, FCCM
Purchasing Manager
Finance Department
City of Port Orange
1000 City Center Circle
Port Orange, FL 32129
Phone: 386-506-5718
Email: jpoolman@port-orange.org and purchdiv@port-orange.org
Website: www.port-orange.org

CITY OF PORT ORANGE
BID TABULATION
ITB #25-13 439865-3-54-01 SJR2C LOOP TRAIL (SPRUCE CREEK RD.) FROM SOUTH OF SELIN CIRCLE TO HERBERT STREET

	CARR & COLLIER, INC.	NON-RESPONSIVE ALL STATE CIVIL CONSTRUCTION, INC.	GPS CIVIL CONTRACTOR, INC.	MASCI GENERAL CONTRACTOR, INC.	CATHCART CONSTRUCTION COMPANY - FLORIDA, LLC
SUB-TOTAL (BID ITEMS 1-58):	$ 1,783,815.00	$ 1,926,796.93	$ 1,935,927.00	$ 1,598,717.86	$ 2,352,286.00
ITEMS TO BE LOCALLY FUNDED					
SUB-TOTAL LOCALLY FUNDED ITEMS:	$ 32,885.00	$ 29,812.50	$ 32,900.00	$ 35,143.79	$ 58,223.00
GRAND TOTAL ALL ITEMS:	$ 1,816,700.00	$ 1,956,609.43	$ 1,968,827.00	$ 1,633,861.65	$2,410,509.00

NOTICE OF INTENT TO AWARD

ITB #25-13

439865-3-54-01 SJR2C Loop Trail (Spruce Creek Rd.) From South of Selin Circle to Herbert Street

---

July XX, 2025

On July 2, 2025, the City of Port Orange received four (4) responsive bid submittals for **ITB #25-13 439865-3-54-01 SJR2C Loop Trail (Spruce Creek Rd.) From South of Selin Circle to Herbert Street.**

After review and analysis of the responsive bid submittals, City Staff has made a recommendation to award to:

Masci General Contractor, Inc.

Respectfully Submitted,

Jill Poolman, NIGP-CPP, CPPO, CPPB, FCCM
Purchasing Manager

"Failure to file a protest within the time prescribed in section 120.57(3), Florida Statutes, or failure to post the bond or other security required by law within the time allowed for filing a bond shall constitute a waiver of proceedings under chapter 120, Florida Statutes." The 72-hour posting requirement will elapse on July XX, 2025 at 9:00 AM EST.

SECTION 7 – REQUIRED FORMS

FORM 7.1 – BID SUBMITTAL CHECKLIST

✓ Form 7.2 – Bidder's Acknowledgement Form

✓ Form 7.3 – Addendum and Change Order Procedure Acknowledgement

✓ Form 7.4 – Drug Free Preference Statement

✓ Form 7.5 – Public Entity Crimes Statement

✓ Form 7.6 – Statement of Bidder's Qualifications

✓ Form 7.7 – Professional References for Previous Experience

✓ Form 7.8 – List of Subcontractors

✓ Form 7.9 – Scrutinized Companies Certification

✓ Form 7.10 – E-Verify Affidavit

✓ Form 7.11 – Affidavit of Compliance with Section 287.138, Florida Statutes

✓ Form 7.12 – No Submittal Response Form

✓ (Attachment 1) – Schedule of Unit Pricing

✓ Affidavit Regarding Labor and Services

✓ Current Bonding Capacity Letter (as outlined in Section 6)

✓ Copy of all currently held Licenses (Contractor, Sunbiz, etc.)

✓ Original Bid Bond

✓ Submission of one (1) original marked "ORIGINAL" and one (1) digital (flash drive) version in PDF format

BY: Masci General Contractor, Inc.
Name of Business

Authorized Signature Leticia M. Ferreira, Vice President

7/2/25
Date

This document must be completed and returned with your Submittal

FORM 7.2 – BIDDER'S ACKNOWLEDGEMENT FORM

I have carefully examined the Invitation to Bid (ITB), Instructions to Bidders, General and/or Special Conditions, Specifications and any other documents accompanying or made a part of this invitation.

I hereby propose to furnish the goods or services specified in the ITB at the prices or rates as finally negotiated. I agree that my bid will remain firm for a period of up to one-hundred-twenty (120) days in order to allow the City of Port Orange adequate time to evaluate the proposed bid. Furthermore, I agree to abide by all conditions of the ITB.

I certify that all information contained in the bid is truthful to the best of my knowledge and belief. I further certify that I am duly authorized to submit this bid on behalf of the Bidder/Contractor as its act and deed and that the Bidder/Contractor is ready, willing and able to perform if awarded the contract.

I further certify that this bid is made without prior understanding, contract, connection, discussion or collusion with any person, firm or corporation submitting a bid for the same product or service; no officer, employee or agent of the City of Port orange City Council or of any other Bidder interested in said ITB; and that the undersigned executed this Bidder's Acknowledgement with full knowledge and understanding of the matters therein contained and was duly authorized to do so.

I further certify that having read and examined the specifications and documents for the designated services and understanding the general conditions for the contract under which services will be performed, does hereby propose to furnish all labor, equipment and material to provide the services set forth in the ITB.

I hereby declare that the following listing states any clarifications, any and all variations from and exceptions to the requirements of the specifications and documents. The undersigned further declares that the "work" will be performed in strict accordance with such requirements and understands that any exceptions to the requirements of the specifications and documents may render the bid non-responsive.

NO EXCEPTIONS ALLOWED AFTER THE BID IS SUBMITTED:

Please check one: ☑I take NO exceptions. ☐Exceptions (list below; add additional pages if necessary):

_____

_____

Masci General Contractor, Inc.	5752 S. Ridgewood Avenue
Name of Business	Mailing Address
[signature]	Port Orange, FL 32127
Authorized Signature	City, State & Zip Code
Leticia Masci Ferreira, Vice President	(386) 322-4500
Printed Name and Title	Telephone Number
20-2045800	leticiamasci@mascigc.com
Federal Identification No.	E-mail Address

STATE OF: Florida COUNTY OF: Volusia

The foregoing instrument was acknowledged before me by means of ☑physical presence or ☐online notarization, this

2nd day of July, 2025, by Leticia Masci Ferreira and who:

☑Is personally known to me; or ☐ has produced _____ as identification.

[signature] Notary Public, State of Florida

Printed, typed or stamped name, commission and expiration:

NOTARY PUBLIC STATE OF FLORIDA
HEATHER A. KNIGHT
Commission # HH 614855
Expires November 20, 2028

This document must be completed and returned with your Submittal

FORM 7.3 – ADDENDUM AND CHANGE ORDER PROCEDURE ACKNOWLEDGEMENT

ADDENDUM ACKNOWLEDGEMENT

I have carefully examined the Invitation to Bid (ITB), Instructions to Bidders, General and/or Special Conditions, Specification and any other documents accompanying or made a part of this ITB.

I acknowledge receipt and incorporation of the following addenda and the cost, if any, of such revisions has been included in the price of the bid proposal.

Addendum# 1	Date: 6/2/25	Addendum#_____	Date:_____
Addendum# 2	Date: 6/20/25	Addendum#_____	Date:_____

CHANGE ORDER PROCEDURE ACKNOWLEDGEMENT

If awarded the Contract for this Solicitation, I acknowledge that no oral statement of any person shall modify or otherwise change or affect the terms, conditions or specifications stated in the resulting contract. All change order requests shall be made in writing by the Contractor for review by the Contract Administrator for the City of Port Orange. No work shall be performed as set forth in the change order until the Contractor receives an executed Purchase Order for the requested change.

I acknowledge the above statements regarding Addendum Acknowledgement and Change Order Procedures:

Masci General Contractor, Inc.
Name of Business

Authorized Signature

Leticia Masci Ferreira, Vice President
Printed Name and Title

STATE OF: Florida COUNTY OF: Volusia

The foregoing instrument was acknowledged before me by means of ☑physical presence or ☐online notarization, this

2nd day of July, 2025, by Leticia Masci Ferreira and who:

☑Is personally known to me; or ☐ has produced _____ as identification.

Notary Public, State of Florida
Printed, typed or stamped name, commission and expiration:

HEATHER A. KNIGHT
Commission # HH 614855
Expires November 20, 2028

This document must be completed and returned with your Submittal

FORM 7.4 – DRUG-FREE PREFERENCE STATEMENT

IDENTICAL TIE BIDS – Preference shall be given to businesses with drug-free workplace programs. Whenever two or more bids, proposals, statements or replies are equal with respect to price, quality and service are received by the City for procurement of commodities or contractual services, a bid received from a business that certifies that it has implemented a drug-free workplace program shall be given preference in the award process. Established procedures for processing tie bids will be followed if none of the tied bidders have a drug-free workplace program.

In order to have a drug-free workplace program, a business shall:

1. Publish a statement notifying employees that the unlawful manufacture, distribution, dispensing, possession or use of a controlled substance is prohibited in the workplace and specifying the actions that will be taken against employees for violations of such prohibition.

2. Inform employees about the dangers of drug abuse in the workplace, the business's policy of maintaining a drug-free workplace, any available drug counseling, rehabilitation and employee assistance programs and the penalties that may be imposed upon employees for drug abuse violations.

3. Give each employee engaged in providing the commodities or contractual services that are under a bid a copy of the statement specified in subsection (1).

4. In the statement specified in subsection (1), notify the employees that, as a condition of working on the commodities or contractual services that are under the bid, the employee will abide by the terms of the statement and will notify the employer of any conviction of, or plea of guilty or nolo contendere to, any violation of chapter 893 or of any controlled substance the law of the United States or any state, for a violation occurring in the workplace no later than five (5) days after such conviction.

5. Impose a sanction on or require the satisfactory participation in a drug abuse assistance or rehabilitation program if such is available in the employee's community, by an employee who is so convicted.

6. Make a good faith effort to continue to maintain a drug-free workplace through implementation of Section 287.087, Florida Statutes.

As an authorized representative of the firm, I certify that this firm complies fully with the above requirements.

Masci General Contractor, Inc.
Name of Business

Authorized Signature

Leticia M. Ferreira, Vice President
Printed Name and Title

STATE OF: Florida COUNTY OF: Volusia

The foregoing instrument was acknowledged before me by means of ☑physical presence or ☐online notarization, this 2nd day of July, 2025, by Leticia M. Ferreira and who:

☑Is personally known to me; or ☐ has produced _____ as identification.

Notary Public, State of FL
Printed, typed or stamped name, commission and expiration:

HEATHER A. KNIGHT
Commission # HH 614855
Expires November 20, 2028

This document must be completed and returned with your Submittal

FORM 7.5 – SWORN STATEMENT ON PUBLIC ENTITY CRIMES
UNDER SECTION 287.133(3)(A), FLORIDA STATUTES
(To be signed in the presence of a notary public or other authorized to administer oaths.)

Before me, the undersigned Authority, personally appeared affiant Leticia M. Ferreira, who, being by me first duly sworn, made the following statement:

1. The business address of Masci General Contractor, Inc. (name of Offeror or business) is 5752 S. Ridgewood Avenue, Port Orange, FL 32127.
2. My relationship to Masci General Contractor, Inc. (name of Offeror or business) is Vice President (relationship such as sole proprietor, partner, president, vice president.)
3. I understand that a public entity crime as defined in Section 287.133 of the Florida Statutes includes a violation of any state or federal law by a person with respect to and directly related to the transaction of business with any public entity in Florida or with an agency or political subdivision of any other state or with the United States, including, but not limited to, any proposal or contract for goods or services to be provided to any public entity or such and agency or political subdivision and involving antitrust, fraud, theft, bribery, collusion, racketeering, conspiracy or material misrepresentation.
4. I understand that "convicted" or "conviction" is defined by the Florida Statutes to mean a finding of guilt or a conviction of a public entity crime, with or without an adjudication of guilt, in any federal or state trial court of record relating to charges brought by indictment or information after July 1, 1989, as a result of a jury verdict, non-jury trial, or entry of a plea of guilt or nolo contendere.
5. I understand that "affiliate" is defined by the Florida Statutes to mean (1) a predecessor or successor of a person or a corporation convicted of a public entity crime, or (2) an entity under the control of any natural person who is active in the management of the entity and who has been convicted of a public entity crime, or (3) those officers, directors, executives, partners, shareholders, employees, members, and agents who are active in the management of an affiliate, or (4) a person or corporation who knowingly entered into a joint venture with a person who has been convicted of a public entity crime in Florida during the preceding 36 months.
6. Neither the Offeror or contractor, nor any officer, director, executive, partner, shareholder, employee, member or agent who is active in the management of the Offeror or contractor, nor any affiliate of the Offeror or contractor has been convicted of a public entity crime subsequent to July 1, 1989. **(Draw a line through paragraph 6 if paragraph 7 below applies.)**
7. There has been a conviction of a public entity crime by the Offeror or contractor, or an officer, director, executive, partner, shareholder, employee, member or agent of the Offeror or contractor who is active in the management of the Offeror or contractor or an affiliate of the Offeror or contractor. A determination has been made pursuant to Section 287.133(3) by order of the Division of Administrative Hearings that it is not in the public interest for the name of the convicted person or affiliate to appear on the convicted bidder list. The name of the convicted person or affiliate is: _____. A copy of the order of the Division Administrative Hearing is attached. **(Draw a line through paragraph 7 if paragraph 6 above applies)**

Masci General Contractor, Inc.
Name of Business

Authorized Signature

STATE OF: Florida

COUNTY OF: Volusia

Leticia M. Ferreira, Vice President
Printed Name and Title

The foregoing instrument was acknowledged before me by means of ☑physical presence or ☐online notarization, this 2nd day of July, 2025, by Leticia M. Ferreira and who:

☑Is personally known to me; or ☐ has produced _____ as identification.

_____Notary Public, State of _____
Printed, typed or stamped name, commission and expiration:

HEATHER A. KNIGHT
Commission # HH 614855
Expires November 20, 2028

This document must be completed and returned with your Submittal

FORM 7.6 – STATEMENT OF BIDDER'S QUALIFICATIONS

The undersigned warrants that he or she is duly authorized to complete this document, and hereby affirms that the information contained in Form 7.6 is complete, true and correct to the best of his or her knowledge and belief. If necessary, question may be answered on separate paper and attached with any additional information that may be pertinent.

A. Name of Bidder: Masci General Contractor, Inc.

B. Permanent main office address: 5752 S. Ridgewood Avenue, Port Orange, FL 32127

C. Date organized: 12/17/2004

D. If a corporation, where incorporated: Florida

E. How many years have you been engaged in the business under your present firm or trade name? 21

F. Contracts on hand: (List these, showing amount of each contract and the appropriate anticipated dates of completion.) **USE SEPARATE SHEET & ATTACH TO SUBMITTAL**

G. General character of work performed by your company: Aspalt manufacturer,Paving, Sitework, Underground Utilities, Concrete, etc.

H. Have you ever failed to complete any work awarded to you? If so, where and why? no

I. Have you ever defaulted on a contract? If so, where and why? no

J. List your major equipment currently owned or leased: **USE SEPARATE SHEET & ATTACH TO SUBMITTAL**

K. Background and experience of the principal members of your organization, including the officers: USE **SEPARATE SHEET & ATTACH TO SUBMITTAL**

L. Credit currently available: $ 7,000,000

M. Give bank name, contact name and phone number: 1st Source Bank, Renee Lincoln, (904) 481-6524

N. Will you, upon request, fill out a detailed financial statement and furnish any other information that may be required by the Owner? ☑Yes ☐No

The undersigned hereby authorizes and requests any person, firm or corporation to furnish any information requested by the Owner in verification of the recitals compromising the Statement of Bidder's Qualifications.

Masci General Contractor, Inc.
Name of Business

Authorized Signature

Leticia M. Ferreira, Vice President
Printed Name and Title

STATE OF: Florida

COUNTY OF: Volusia

The foregoing instrument was acknowledged before me by means of ☑physical presence or ☐online notarization, this 2nd day of July, 2025, by Leticia M. Ferreira and who:

☑Is personally known to me; or ☐ has produced _____ as identification.

_____ Notary Public, State of _____

Printed, typed or stamped name, commission and expiration:

HEATHER A. KNIGHT
Commission # HH 614855
Expires November 20, 2028

This document must be completed and returned with your Submittal

FORM 7.7 – PROFESSIONAL REFERENCES FOR PREVIOUS EXPERIENCE

The Bidder proposes that they are qualified to perform the referenced work and has successfully done so on recent projects similar in nature and size. The City reserves the right to check references and confirm information provided herein. **Please provide three (3) current and correct references from clients for similar services. (DO NOT include the City of Port Orange)**

1. Company Name: Flagler County
   Contact Person: Amy Stroger
   City, State: Palm Coast, Florida
   Telephone Number: (386) 313-4047
   Email Address: astroger@flaglercounty.gov
   Description of goods/services provided: milling, paving, trail, bridge, grading, drainage, concrete, lighting, striping, etc.
   Contract Amount: $9,478,640.33
   Start/End Date of Contract: 2022-2023
2. Company Name: WSB Engineering
   Contact Person: Chris Nolen
   City, State: Orlando, Florida
   Telephone Number: (863) 651.9105
   Email Address: cnolen@wsbeng.com
   Description of goods/services provided: milling, paving, grading, drainage, concrete, signals, striping, etc.
   Contract Amount: $5,312,936.32
   Start/End Date of Contract: 2022-2023
3. Company Name: RKK
   Contact Person: Chas Starr
   City, State: Orlando, Florida
   Telephone Number: (407) 923-4908
   Email Address: cstarr@rkk.com
   Description of goods/services provided:
   Contract Amount: $16,029,260.78
   Start/End Date of Contract: 2022-2024

This document must be completed and returned with your Submittal.

FORM 7.7 – PROFESSIONAL REFERENCES FOR PREVIOUS EXPERIENCE (page 2)

LISTING OF PREVIOUS EXPERIENCE
COMMERCIAL CLIENT LIST

The Bidder proposes that they are qualified to perform the referenced work and has successfully done so on recent projects similar in nature and size. A minimum of three (3) projects must be listed below. The Owner reserves the right to check references and confirm information provided herein.

List clients to whom you currently provide or have in the past provided equal or similar services to those required under the City's contract as outlined in this bid package. A minimum of three (3) projects shall be listed below in order to bid on this contract. The Owner reserves the right to check references and confirm information provided herein.

1. Contact Name: Doug Schumann
   Phone: (407) 496-9627
   Current Client: ☑Yes ☐ No
   Number of years of service provided: +5 years
   Description of service: Roadwork including miling, paving, concrete and other incidentals

2. Contact Name: Brad D. Bauknecht
   Phone: (386) 872-7794
   Current Client: ☑Yes ☐ No
   Number of years of service provided: +10 years
   Description of service: Roadwork including miling, paving, concrete and other incidentals

3. Contact Name: Anurag (Anu) Shah, P.E.
   Phone: office (321) 274-9892 & cell (850) 341-6114
   Current Client: ☑Yes ☐ No
   Number of years of service provided: 5 years
   Description of service: Roadwork including miling, paving, concrete and other incidentals

This document must be completed and returned with your Submittal.

FORM 7.8 – LISTING OF SUBCONTRACTORS

The Bidder proposes that the following subcontractors are qualified to perform the referenced work and have successfully done so on recent projects similar in nature and size. All subcontractors whose work product accounts for 5% or more of the total contract value shall be listed. Upon approval of subcontractors listed, the successful **Bidder shall not substitute subcontractors without approval from the City Representative.** Bidder shall attach additional sheets as necessary.

Subcontractor No. 1

Name: Chinchor Electric, Inc.

Description of Work: Electrical / Lighting

Percent of Contract Price: 21%

Previous Experience Together: ☑Yes ☒No

Subcontractor No. 2

Name: Nautre Bridges

Description of Work: Boardwalk

Percent of Contract Price: 25%

Previous Experience Together: ☑Yes ☐No

Subcontractor No. 3

Name: _____

Description of Work: _____

Percent of Contract Price: _____

Previous Experience Together: ☐Yes ☐No

Subcontractor No. 4

Name: _____

Description of Work: _____

Percent of Contract Price: _____

Previous Experience Together: ☐Yes ☐No

Subcontractor No. 5

Name: _____

Description of Work: _____

Percent of Contract Price: _____

Previous Experience Together: ☐Yes ☐No

This document must be completed and returned with your submittal

FORM 7.9 SCRUTINIZED COMPANIES CERTIFICATION

(To be signed in the presence of a notary public or other officer authorized to administer oaths.)

SCRUTINIZED COMPANIES CERTIFICATION PURSUANT TO SECTION 287.135, FLORIDA STATUTES

I, Leticia M. Ferreira, Vice President, on behalf
(Print Name and Title)

of Masci General Contractor, Inc. ("Company"), certify that Masci General Contractor, Inc.
(Company Name) (Company Name)

does not:
1. Participate in a boycott of Israel; and
2. Is not on the Scrutinized Companies with Boycott Israel List; and
3. Is not on the Scrutinized Companies with Activities in Sudan List; and
4. Is not on the Scrutinized Companies with Activities in the Iran Petroleum Energy Sector List; and
5. Has not engaged in business operations in Syria.

Submitting a false certification shall be deemed a material breach of contract. The City of Port Orange shall provide notice, in writing, to the Company of the City's determination concerning the false certification. The Company shall have ninety (90) days following receipt of the notice to respond in writing and demonstrate that the determination of false certification was made in error. If the Company does not demonstrate that the City's determination of false certification was made in error, then the City shall have the right to terminate the contract and seek civil remedies pursuant to Florida Statute § 287.135.

Section 287.135, Florida Statutes prohibits the City from: 1) Contracting with companies for goods or services in any amount if at the time of bidding on, submitting a proposal for, or entering into or renewing a contract if the company is on the Scrutinized Companies that Boycott Israel List, created pursuant to Section 215.4725, F.S. or is engaged in a boycott of Israel; and 2) Contracting with companies for goods or services over $1,000,000.00 that are on either the Scrutinized Companies with activities in the Iran Petroleum Energy Sector List, created pursuant to s. 215.473, or are engaged in business operations in Syria.

As the person authorized to sign on behalf of the Company, I hereby certify that the company identified above in the section entitled "Company Name" does not participate in any boycott of Israel, is not listed on the Scrutinized Companies that Boycott Israel List, is not listed on either the Scrutinized Companies with activities in the Iran Petroleum Energy Sector List and is not engaged in business operations in Syria. I understand that pursuant to Section 287.135, Florida Statutes, the submission of a false certification may subject the company to civil penalties, attorney's fees, and/or costs. I further understand that any contract with the City for goods or services may be terminated at the option of the City if the company is found to have submitted a false certification or has been placed on the Scrutinized Companies with Activities in Sudan List or the Scrutinized Companies with Activities in the Iran Petroleum Energy Sector List.

Masci General Contractor, Inc. _____
COMPANY NAME

_____
SIGNATURE

Leticia M. Ferreira
PRINT NAME

Vice President
TITLE

STATE OF FLORIDA

COUNTY OF: Volusia

The foregoing instrument was acknowledged before me by means of ☑physical presence or ☐online notarization, this 2nd day of July, 2025, by Leticia M. Ferreira and who:

☑Is personally known to me; or ☐ has produced _____ as identification.

_____ Notary Public, State of Florida
Printed, typed or stamped name, commission and expiration:

HEATHER A. KNIGHT
Commission # HH 614855
Expires November 20, 2028

This document to be completed and returned with your Submittal

FORM 7.10 – E-VERIFY AFFIDAVIT

CITY OF PORT ORANGE

CONTRACTOR E-VERIFY AFFIDAVIT

IN ACCORDANCE WITH SECTION 448.095, FLORIDA STATUTES

Project Name: Masci General Contractor, Inc.

Solicitation Number: ITB 25-13

I, the undersigned hereby certify that Masci General Contractor, Inc. **(insert contractor company name) does not employ, contract with or subcontract with an unauthorized alien, and is otherwise in full compliance with Section 448.095, Florida Statutes.**

I acknowledge that it is my responsibility to ensure full compliance with Section 448.095, Florida Statutes. I am aware enrollment in the E-Verify system for employers can be done at www.e-verify.gov.

A true and correct copy of Masci General Contractor, Inc. **(insert contractor company name) proof of registration in the E-Verify system is attached to this Affidavit.**

By affixing my signature below, I hereby affirm that I am duly authorized to bind the company reference herein and I will comply with all applicable E-Verify requirements.

Leticia M. Ferreira, Vice President
Print or Type Name, Title

Signature of Affiant

20-2045800
Federal Employer ID Number (FEIN)

1454791
E-Verify Number

STATE OF FLORIDA

COUNTY OF: Volusia

The foregoing instrument was acknowledged before me by means of ☑physical presence or ☐online notarization, this 2nd day of July, 2025, by Leticia M. Ferreira and who:

☑Is personally known to me; or ☐ has produced _____ as identification.

Notary Public, State of Florida

Printed, typed or stamped name, commission and expiration:

HEATHER A. KNIGHT
Commission # HH 614855
Expires November 20, 2028

This document to be completed and returned with your Submittal

FORM 7.11 – AFFIDAVIT OF COMPLIANCE WITH SECTION 287.138, FLORIDA STATUTES

AFFIDAVIT OF COMPLIANCE WITH SECTION 287.138, FLORIDA STATUTES CONTRACTING WITH FOREIGN ENTITIES OF CONCERN

The undersigned ("Affiant"), on behalf of the entity listed below ("Entity"), hereby attests under penalty of perjury as follows:

1. Affiant is the Vice President (Title) of Masci General Contractor, Inc. (Business Name) which does business in the State of Florida, hereinafter called the "Entity".
2. Entity is not owned by the government of a foreign country of concern, as defined in Section 287.138 (1) (c), Florida Statutes.
3. The government of a foreign country of concern does not have a controlling interest in Entity, as defined in Section 287.138 (1)(a), Florida Statutes.
4. Entity is not organized under the laws of, and does not have a principal place of business in, a foreign country of concern.
5. Entity is not owned or controlled by the government of a foreign country of concern.
6. For purposes of this affidavit, a foreign country of concern means the People's Republic of China, the Russian Federation, the Islamic Republic of Iran, the Democratic People's Republic of Korea, the Republic of Cuba, the Venezuelan regime of Nicolas Maduro, or the Syrian Arab Republic, including any agency of or any other entity of significant control of such foreign country of concern, as defined in Section 287.138(1)(c), Florida Statutes.

The undersigned is authorized to execute this affidavit on behalf of the Entity.

Date: July 2, 2025 Signed: _____

Entity: Masci General Contractor, Inc. Name: Leticia M. Ferreira

Title: Vice President

STATE OF: Florida COUNTY OF: Volusia

The foregoing instrument was acknowledged before me by means of ☑physical presence or ☐online notarization, this 2nd day of July, 2025, by Leticia M. Ferreira and who:

☑Is personally known to me; or ☐ has produced _____ as identification.

_____

Notary Public, State of Florida at Large:
Printed Name/Seal of Notary, Commission and Expiration Date:

HEATHER A. KNIGHT
Commission # HH 614855
Expires November 20, 2028

(seal)

My commission expires: _____

This document must be completed and returned with your Submittal

(ATTACHMENT 1) SCHEDULE OF UNIT PRICING
CITY OF PORT ORANGE
ITB #25-13
439865-3-54-01 SJR2C Loop Trail (Spruce Creek Rd.) form South of Selin Circle to Herbert Street
Completed (Attachment 1) Schedule of Unit Pricing MUST be included with Bid Submission

Bidders are required to complete all fields shaded in green.

(ATTACHMENT 1) SCHEDULE OF UNIT PRICING MUST BE SIGNED

NAME OF BUSINESS:	Masci General Contractor, Inc.
CONTACT PERSON:	Leticia M. Ferreira, Vice President
EMAIL ADDRESS:	leticiamasci@mascigc.com
AUTHORIZED SIGNATURE:	

ALL UNIT PRICING IN ACCORDANCE WITH SPECIFICATIONS - AWARD WILL BE MADE BASED ON GRAND TOTAL PRICING FOR ALL ITEMS

BID ITEMS - PER SECTION 3 - SCOPE OF WORK

ITEM #	ITEM DESCRIPTION	QTY	UNIT of MEASURE	UNIT PRICE	EXTENDED PRICE
0101 1	MOBILIZATION	1	LS	$ 143,258.00	$ 143,258.00 -
0102 1	MAINTENANCE OF TRAFFIC	1	LS	$ 25,000.00	$ 25,000.00 -
0104 10 3	SEDIMENT BARRIER	5,168	LF	$ 1.75 -	$ 9,044.00 -
0104 11	FLOATING TURBIDITY BARRIER	200	LF	$ 12.50 -	$ 2,500.00 -
0104 18	INLET PROTECTION SYSTEM	3	EA	$ 200.00 -	$ 600.00 -
0110 1 1	CLEARING & GRUBBING	0.689	AC	$ 50,000.00	$ 34,450.00 -
0110 2 2	SELECTIVE CLEARING AND GRUBBING, AREAS WITH TREES TO REMAIN	0.529	AC	$ 75,000.00	$ 39,675.00 -
0110 23	TREE REMOVAL	5	EA	$ 1,540.00-	$ 7,700.00 -
0110 4 10	REMOVAL OF EXISTING CONCRETE	189	SY	$ 37.50 -	$ 7,087.50 -
0120 1	REGULAR EXCAVATION	68.0	CY	$ 35.27 -	$ 2,398.36 -
0120 6	EMBANKMENT	215.0	CY	$ 39.45 -	$ 8,481.75 -
0160 4	TYPE B STABILIZATION	1,038	SY	$ 8.50 -	$ 8,823.00 -
285701-A	DENSE GRADED AGGREGATE BASE (98% MOD PROCTOR DENSITY) 3" THICK	1,038	SY	$ 27.50 -	$ 28,545.00 -
0334 1 12	SUPERPAVE ASPHALTIC CONC, TRAFFIC B	342.5	TN	$ 139.57 -	$ 47,802.73 -
0400 0 11	CONCRETE CLASS NS, GRAVITY WALL INDEX 400-011	83.3	CY	$ 1,532.00	$ 127,615.60-
0425 1521	INLETS, DT BOT, TYPE C,<10'	3	EA	$ 8,240.00-	$ 24,720.00 -
0425 5	MANHOLE, ADJUST	1	EA	$ 1,050.00	$ 1,050.00 -
0430174118	PIPE CULVERT, OPTIONAL MATERIAL, ROUND, 18"SD	131	LF	$ 139.77 -	$ 18,309.87 -
0430174124	PIPE CULVERT, OPTIONAL MATERIAL, ROUND, 24"SD	29	LF	$ 165.58 -	$ 4,801.82 -
0430982125	MITERED END SECTION, OPTIONAL ROUND, 18" CD	3	EA	$ 3,700.00	$ 11,100.00 -
0430982129	MITERED END SECTION, OPTIONAL ROUND, 24" CD	1	EA	$ 4,000.00-	$ 4,000.00 -
0430984125	MITERED END SECTION, OPTIONAL ROUND, 18" SD	1	EA	$ 3,700.00-	$ 3,700.00 -
0515 1 2	PIPE HANDRAIL - GUIDERAIL, ALUMINUM	308	LF	$ 71.00 -	$ 21,868.00 -
0520 1 10	CONCRETE CURB & GUTTER, TYPE F	180	LF	$ 53.40 -	$ 9,612.00 -
0522 1	CONCRETE SIDEWALK AND DRIVEWAYS, 4" THICK	485	SY	$ 89.50 -	$ 43,407.50 -
0522 2	CONCRETE SIDEWALK AND DRIVEWAYS, 6" THICK	284	SY	$ 110.47 -	$ 31,373.48 -
0527 2	DETECTABLE WARNINGS	287	SF	$ 28.00 -	$ 8,036.00 -
0570 1 2	PERFORMANCE TURF, SOD	2,558	SY	$ 5.10 -	$ 13,045.80 -
0630 2 11	CONDUIT, FURNISH & INSTALL, OPEN TRENCH	364	LF	$ 27.73 -	$ 10,093.36-
0630 2 12	CONDUIT, FURNISH & INSTALL, DIRECTIONAL BORE	120	LF	$ 33.41 -	$ 4,009.20 -
0630 2 14	CONDUIT, FURNISH & INSTALL, ABOVEGROUND	90	LF	$ 18.86 -	$ 1,697.67 -
0630 2 15	CONDUIT, FURNISH & INSTALL, BRIDGE MOUNT	697	LF	$ 20.64 -	$ 14,388.87-
0632 7 2	SIGNAL CABLE- REPAIR/REPLACE/OTHER, FURNISH & INSTALL	50	LF	$ 9.02 -	$ 451.10 -
0633 6	FIBER OPTIC CABLE LOCATOR	1	DA	$ 532.35-	$ 532.35 -
0635 2 11	PULL & SPLICE BOX, F&I, 13" x 24" COVER SIZE	15	EA	$ 3,202.50	$ 48,037.47-
0635 3 11	JUNCTION BOX, FURNISH & INSTALL, AERIAL	12	EA	$ 1914.60	$ 22,975.21
0639 1112	ELECTRICAL POWER SERVICE, F&I, OVERHEAD METER PURCHASED BY CONTRACTOR FROM POWER COMPANY	4	AS	$ 4,021.36-	$ 16,085.42 -

ITEM #	ITEM DESCRIPTION	QTY	UNIT of MEASURE	UNIT PRICE	EXTENDED PRICE
0639 2 1	ELECTRICAL SERVICE WIRE, FURNISH & INSTALL	360	LF	$8.37 -	$3,013.92 -
0639 3 11	ELECTRICAL SERVICE DISCONNECT, F&I, POLE MOUNT	1	EA	$4,292.60	$4,292.60 -
0641 2 12	PRESTRESSED CONCRETE POLE, F&I, TYPE P-II SERVICE POLE	4	EA	$4,484.75	$17,939.01
0646 1 11	ALUMINUM SIGNALS POLE, PEDESTAL	2	EA	$4,487.76	$8,975.51 -
0646 1 12	ALUMINUM SIGNALS POLE, FURNISH & INSTALL PEDESTRIAN DETECTOR POST	6	EA	$3,727.93	$22,367.59-
0653 1 11	PEDESTRIAN SIGNAL, FURNISH & INSTALL LED COUNTDOWN, 1 WAY	2	AS	$993.23	$1,986.45 -
0653 1 60	PEDESTRIAN SIGNAL, REMOVE PED SIGNAL- POLE/PEDESTAL TO REMAIN	2	AS	$354.90-	$709.80 -
0654 2 12	MIDBLOCK CROSSWALK: RECTANGULAR RAPID FLASHING BEACON, FURNISH & INSTALL-AC, COMPLETE SIGN ASSEMBLY- BACK TO BACK	6	AS	$15,733.90	$94,403.40
0665 1 11	PEDESTRIAN DETECTOR, FURNISH & INSTALL, STANDARD	2	EA	$785.51	$1,571.02 -
0665 1 60	PEDESTRIAN DETECTOR, REMOVE- POLE/PEDESTAL TO REMAIN	2	EA	$177.45-	$354.90 -
0700 1111	SINGLE COLUMN GROUND SIGN ASSEMBLY, F&I GROUND MOUNT, LESS THAN 12 SF	20	EA	$996.45	$19,929.00
0700 1600	SINGLE COLUMN GROUND SIGN ASSEMBLY, REMOVE	3	EA	$354.90	$1,064.70 -
0711 11123	THERMOPLASTIC, STANDARD, WHITE, SOLID, 12" FOR CROSSWALK AND ROUNDABOUT	442	LF	$18.00 -	$7,956.00 -
0711 11125	THERMOPLASTIC, STANDARD, WHITE, SOLID, 24" FOR STOP LINE AND CROSSWALK	470	LF	$21.00 -	$9,870.00 -
0711 11160	THERMOPLASTIC, STANDARD, WHITE, MESSAGE OR SYMBOL	2	EA	$595.00-	$1,190.00 -
0711 16101	THERMOPLASTIC, STANDARD-OTHER SURFACES, WHITE, SOLID, 6"	0.003	GM	$275,000.00	$825.00 -
0711 17 1	THERMOPLASTIC, REMOVE EXISTING THERMOPLASTIC PAVEMENT MARKINGS- SURFACE TO REMAIN	317	SF	$10.00 -	$3,170.00 -
0715 1 12	LIGHTING CONDUCTORS, F&I, INSULATED, NO.8 - 6	3,247	LF	$3.03 -	$9,835.16 -
0715 516-513	LIGHT POLE COMPLETE-SPECIAL DESIGN, F&I, POLE TOP MOUNT, WOOD, 13'	11	EA	$8,872.66	$97,599.22
0715 516-518	LIGHT POLE COMPLETE-SPECIAL DESIGN, F&I, POLE TOP MOUNT, WOOD, 18'	1	EA	$9,324.71	$9,324.71 -
0751 49	TIMBER PEDESTRIAN BRIDGE	5,472	SF	$87.00 -	$476,064.00
				SUB-TOTAL BID ITEMS:	$1,598,718.05

ITEMS TO BE LOCALLY FUNDED					
ITEM #	ITEM DESCRIPTION	QTY	UNIT of MEASURE	UNIT PRICE	EXTENDED PRICE
0522 2A	CONCRETE SHARED USE PATH, 7" THICK (HEAVY DUTY) (IN LIEU OF 4" THICK)	47	SY	$159.75	$7,508.25 -
CITY-01	18" WAPRO STAINLESS WASTOP INLINE CHECK VALVE	1	EA	$27,635.54	$27,635.54 -
				SUB-TOTAL LOCALLY FUNDED ITEMS:	$35,143.79-
				GRAND TOTAL ALL ITEMS:	$1,633,861.84

AFFIDAVIT REGARDING LABOR AND SERVICES

Effective July 1, 2024, pursuant to §787.06(13), Florida Statutes, when a contract is executed, renewed, or extended between a nongovernmental entity and a governmental entity, the nongovernmental entity must provide the governmental entity with an affidavit signed by an officer or a representative of the nongovernmental entity under penalty of perjury attesting that the nongovernmental entity does not use coercion for labor or services.

Nongovernmental Entity's Name:	Masci General Contractor, Inc.
Address:	5752 S. Ridgewood Avenue, Port Orange, FL 32127
Phone Number:	(386) 322-4500
Authorized Representative's Name:	Leticia M. Ferreira
Authorized Representative's Title:	Vice President
Email Address:	leticiamasci@mascigc.com

AFFIDAVIT

I, *insert nongovernmental entity's authorized representative name*, as authorized representative attest that *insert nongovernmental entity's name*does not use coercion for labor or services as defined in §787.06, Florida Statutes.

Under penalty of perjury, I declare that I have read the foregoing Affidavit and that the facts stated in it are true.

(Signature of authorized representative) 7/2/25 Date

STATE
COUNTY OF
Sworn to (or affirmed) and subscribed before me, by means of ☑ physical presence or ☐ online notarization, this day of (year), by

Notary Public

Commission Expires

HEATHER A. KNIGHT
Commission # HH 614855
Expires November 20, 2028

Personally Known ☑ OR Produced Identification ☐
Type of Identification Produced

BID BOND

BID BOND

Bond No.: N/A

KNOW ALL MEN BY THESE PRESENTS that Masci General Contractor, Inc., as Contractor, duly authorized to conduct business in the State of Florida, whose principal place of business is located at * , Tel.: (386) 322-4500 , (hereinafter called "PRINCIPAL"), and Arch Insurance Company , as SURETY, duly authorized to conduct business in the State of Florida, whose principal place of business is located at Harborside 3, 210 Hudson St., #300** , Tel: 201-743-4000 (hereinafter called "SURETY"), are held and firmly bound unto the City of Port Orange, Florida, as CITY, a Florida municipal corporation, whose address is City of Port Orange, 1000 City Center Circle, Port Orange, Florida 32129, Tel: (386) 506-5501, (hereinafter called "OBLIGEE" or CITY", in the penal sum of Five Percent of Amount Bid----------dollars and (-------)/100 ($---5%---), lawful money of the United States, for the payment of which sum shall and truly be made, whereof PRINCIPAL and SURETY bind themselves, their heirs, executors, administrators, successors and assigns, jointly and severally, firmly by these presents.

THE CONDITION OF THIS OBLIGATION IS SUCH that, whereas the Principal has submitted the accompanying bid, dated July 2nd, 2025, for:

Project Name/Bid No.: ITB #25-13; SJR2C Loop Trail, Port Orange, Florida

Project Address: Spruce Creek Road, from South of Selin Circle to Herbert Street, Port Orange, FL

Legal Description: See Attached

Description of Work: Concrete, Underground Utilities, Boardwalk, Trail, Electrical/Lighting

NOW, THEREFORE,

A. If the Principal shall not withdraw said bid withing one hundred twenty (120) days after date of opening of the same, and shall within ten (10) days after the prescribed forms are presented to it for signature, enter into a written contract with the City in accordance with the bid as accepted, and give bonds with good and sufficient surety or sureties, as may be required, for the faithful performance and proper fulfillment of such contract, then the above obligations shall be void and of no effect, otherwise to remain in full force and virtue.

B. In the event of the withdrawal of said bid within the period specified, or the failure to enter into such contract and give such bonds withing the time specified, if the principal shall pay the City the difference between the amount specified in said bid and the amount for which the City may procure the required work and supplies. If the latter amount be in excess of the former, then the above obligations then the above obligations shall be void and of no effect, otherwise to remain in full force and virtue.

IN WITNESS WHEREOF, the above parties have executed this instrument under their several seals, this 2nd day of July, 2025, the name and corporate seal of each corporate party being hereto affixed and these presents duly signed by its undersigned representative, pursuant to authority of its governing body.

Note: If the firm is a sole ownership or partnership including limited liability company, two (2) witnesses are required to attest the signature. If the firm is a corporation, then the corporate secretary shall attest and affix the corporate seal (Attach power of attorney to the original bid bond and financial statement of Surety Company).

*5752 S. Ridgewood Avenue, Port Orange, FL 32127

**, Jersey City, NJ 07311-1107

DESCRIPTION: The SJR2C Loop Trail (Spruce Creek Rd) project is within the City of Port Orange. The project is a Shared use path (SUNTrail) from south of Selin Circle to Herbert Street. This segment, of the much larger trail system, begins south of the intersection of Spruce Creek Road and Selin Circle. The 8-foot-wide concrete trail of 240 linear feet will extend northerly along the west side of Spruce Creek Road towards Oak Street utilizing a portion of the existing 8 feet concrete sidewalk and will continue along the east side of Halifax Canal from Oak Street to Dunlawton Avenue utilizing the existing 8-foot-wide trail for 1,190 linear feet. 986 linear feet of 12-foot-wide heavy-duty asphalt trail will then continue along Spruce Creek Road from Dunlawton Avenue to Canal View Boulevard. 715 linear feet of 8-foot boardwalk continues through a vacant city-owned parcel from Canal View Boulevard to 120 feet South of Herbert Street. The last segment will be 120 linear feet of 8-foot-wide concrete sidewalk connecting to the existing trail segment. Total project length is approximately 0.671 miles.

PRINCIPAL: Masci General Contractor, Inc.

Signature

Leticia M. Ferrera, Vice President

Corporate Officer & Title

ATTEST:

Signature

Ignacio Masci, Secretary

Corporate Secretary (Affix Corporate Seal)

WITNESSESS:

SURETY: Arch Insurance Company

Attorney-in-Fact (signature)

Jeffrey W. Reich*, Attorney-In-Fact

Name & Title

Jeffrey W. Reich*, FL Licensed Resident Agent

Name of Local Resident Agent

Harborside 3, 210 Hudson St., #300

City, State, Zip

Jersey City, NJ 07311-1107

Telephone: 201-743-4000

A.M. Best No.: 003186 NAIC No.: 11150

ATTEST:

Signature

Susan L. Reich

Corporate Secretary (Affix Corporate Seal)

*Inquiries: 407-786-7770

STATE OF FLORIDA

COUNTY OF ORANGE

Before me this day personally appeared Jeffrey W. Reich (affiant), who, being duly sworn, deposes and says that he/she is the Attorney-in-Fact for the Arch Insurance Company (corporate surety) and that this person has been authorized by Arch Insurance Company (corporate surety) to execute the foregoing bond on behalf of the Contractor named therein in favor of the City of Port Orange, Florida.

Signature of Affiant Jeffrey W. Reich

The foregoing instrument was acknowledged before me by means of ☒physical presence or ☐online notarization, this 2nd day of July, 2025, by Jeffrey W. Reich and who:

☒is personally known to me; or ☐ has produced N/A as identification.

Notary Public, State of FLORIDA

Printed, typed or stamped name, commission and expiration: 07/09/2026

Notary Public State of Florida
Elizabeth Luu Karoly
My Commission HH 283384
Expires 7/9/2026

END OF BID BOND

This document must be completed and returned with your Submittal

ARCH INSURANCE COMPANY
STATEMENT OF FINANCIAL CONDITION
DECEMBER 31, 2024

Assets

Cash & Cash Equivalents in Banks	175,754,117
Bonds owned	7,485,879,345
Stocks	956,862,153
Premiums in course of collection	1,406,595,498
Accrued interest and other assets	1,957,852,150
Total Assets	$ 11,982,943,263

Liabilities

Reserve for losses and adjustment expenses	$4,026,358,684
Reserve for unearned premiums	2,547,334,728
Ceded reinsurance premiums payable	1,430,834,505
Amounts withheld or retained by company for account of others	158,863,371
Reserve for taxes, expenses and other liabilities	1,152,110,034
Total Liabilities	$9,315,501,322
Surplus as regards policyholders	2,667,441,941
Total Surplus and Liabilities	$11,982,943,263

By: _____ Attest: _____

Executive Vice President, Chief Financial Officer and Treasurer

Executive Vice President, General Counsel and Secretary

State of New Jersey)
) SS
County of Hudson)

Thomas James Ahern, Executive Vice President, Chief Financial Officer and Treasurer and Regan Abby Shulman, Executive Vice President, General Counsel and Secretary being duly sworn, of ARCH INSURANCE COMPANY, Missouri; and that the foregoing is a true and correct statement of financial condition of said company, as of December 31, 2024.

Subscribed and sworn to before me, this 20 day of March 2025

Notary Public Barbara Lee

Barbara A Lee
NOTARY PUBLIC
State of New Jersey
ID # 50107758
My Commission Expires 6/27/2029

This Power of Attorney limits the acts of those named herein, and they have no authority to bind the Company except in the manner and to the extent herein stated. Not valid for Note, Loan, Letter of Credit, Currency Rate, Interest Rate or Residential Value Guarantees.

POWER OF ATTORNEY

Know All Persons By These Presents:
That the Arch Insurance Company, a corporation organized and existing under the laws of the State of Missouri, having its principal administrative office in Jersey City, New Jersey (hereinafter referred to as the "Company") does hereby appoint:

Cheryl Foley, Emily Golecki, Jeffrey W. Reich, Kim E. Niv, Lisa Roseland, Robert P. O'Linn, Sarah K. O'Linn, Susan L. Reich and Teresa L. Durham of Maitland, FL (EACH)

its true and lawful Attorney(s)in-Fact, to make, execute, seal, and deliver from the date of issuance of this power for and on its behalf as surety, and as its act and deed: Any and all bonds, undertakings, recognizances and other surety obligations, in the penal sum not exceeding One Hundred Fifty Million Dollars ($150,000,000.00). This authority does not permit the same obligation to be split into two or more bonds In order to bring each such bond within the dollar limit of authority as set forth herein.

The execution of such bonds, undertakings, recognizances and other surety obligations in pursuance of these presents shall be as binding upon the said Company as fully and amply to all intents and purposes, as if the same had been duly executed and acknowledged by its regularly elected officers at its principal administrative office in Jersey City, New Jersey.

This Power of Attorney is executed by authority of resolutions adopted by unanimous consent of the Board of Directors of the Company on August 31, 2022, true and accurate copies of which are hereinafter set forth and are hereby certified to by the undersigned Secretary as being in full force and effect:
"**VOTED**, That the Chairman of the Board, the President, or the Executive Vice President, or any Senior Vice President, of the Surety Business Division, or their appointees designated in writing and filed with the Secretary, or the Secretary shall have the power and authority to appoint agents and attorneys-in-fact, and to authorize them subject to the limitations set forth in their respective powers of attorney, to execute on behalf of the Company, and attach the seal of the Company thereto, bonds, undertakings, recognizances and other surety obligations obligatory in the nature thereof, and any such officers of the Company may appoint agents for acceptance of process."

This Power of Attorney is signed, sealed and certified by facsimile under and by authority of the following resolution adopted by the unanimous consent of the Board of Directors of the Company on August 31, 2022:

VOTED, That the signature of the Chairman of the Board, the President, or the Executive Vice President, or any Senior Vice President, of the Surety Business Division, or their appointees designated in writing and filed with the Secretary, and the signature of the Secretary, the seal of the Company, and certifications by the Secretary, may be affixed by facsimile on any power of attorney or bond executed pursuant to the resolution adopted by the Board of Directors on August 31, 2022, and any such power so executed, sealed and certified with respect to any bond or undertaking to which it is attached, shall continue to be valid and binding upon the Company. **In Testimony Whereof**, the Company has caused this instrument to be signed and its corporate seal to be affixed by their authorized officers, this **28th day of November, 2023**.

Attested and Certified

Regan A. Shulman, Secretary

Arch Insurance Company
CORPORATE SEAL 1977
Missouri

Arch Insurance Company

Stephen C. Ruschak, Executive Vice President

STATE OF PENNSYLVANIA SS
COUNTY OF PHILADELPHIA SS

I, **Michele Tripodi**, a Notary Public, do hereby certify that Regan A. Shulman and Stephen C. Ruschak personally known to me to be the same persons whose names are respectively as Secretary and Executive Vice President of the Arch Insurance Company, a Corporation organized and existing under the laws of the State of Missouri, subscribed to the foregoing instrument, appeared before me this day in person and severally acknowledged that they being thereunto duly authorized signed, sealed with the corporate seal and delivered the said instrument as the free and voluntary act of said corporation and as their own free and voluntary acts for the uses and purposes therein set forth.

Commonwealth of Pennsylvania - Notary Seal
MICHELE TRIPODI, Notary Public
Philadelphia County
My Commission Expires July 31, 2025
Commission Number 1168622

Michele Tripodi, Notary Public
My commission expires 07/31/2025

CERTIFICATION

I, **Regan A. Shulman**, Secretary of the Arch Insurance Company, do hereby certify that the attached **Power of Attorney dated November 28, 2023** on behalf of the person(s) as listed above is a true and correct copy and that the same has been in full force and effect since the date thereof and is in full force and effect on the date of this certificate; and I do further certify that the said Stephen C. Ruschak, who executed the Power of Attorney as Executive Vice President, was on the date of execution of the attached Power of Attorney the duly elected Executive Vice President of the Arch Insurance Company.

IN TESTIMONY WHEREOF, I have hereunto subscribed my name and affixed the corporate seal of the Arch Insurance Company on this 2nd **day of** July, **20**25.

Regan A. Shulman, Secretary

This Power of Attorney limits the acts of those named therein to the bonds and undertakings specifically named therein and they have no authority to bind the Company except in the manner and to the extent herein stated.

PLEASE SEND ALL CLAIM INQUIRIES RELATING TO THIS BOND TO THE FOLLOWING ADDRESS:
Arch Insurance – Surety Division
3 Parkway, Suite 1500
Philadelphia, PA 19102

Arch Insurance Company
CORPORATE SEAL 1977
Missouri

To verify the authenticity of this Power of Attorney, please contact Arch Insurance Company at SuretyAuthentic@archinsurance.com
Please refer to the above named Attorney-in-Fact and the details of the bond to which the power is attached.

Florida Department of Transportation

RON DESANTIS
GOVERNOR

605 Suwannee Street
Tallahassee, FL 32399-0450

JARED W. PERDUE, P.E.
SECRETARY

June 03, 2025

MASCI GENERAL CONTRACTORS, INC
5752 SOUTH RIDGEWOOD AVE
PORT ORANGE, FLORIDA 32127

REVISED
RE: CERTIFICATE OF QUALIFICATION

The Department of Transportation has qualified your company for the type of work indicated below.

FDOT APPROVED WORK CLASSES:
DRAINAGE, FLEXIBLE PAVING, GRADING, GRASSING, SEEDING AND SODDING, HOT PLANT-MIXED BITUM. COURSES, INTERMEDIATE BRIDGES, MINOR BRIDGES, SIDEWALK, CURB & GUTTER, MILLING, UNDERGROUND UTILITIES (WATER & SEWER).

Unless notified otherwise, this Certificate of Qualification will expire **6/30/2026**.

In accordance with Section 337.14(1), Florida Statutes, an application for qualification must be filed within (4) months of the ending date of the applicant's audited annual financial statements.

If the company's maximum capacity has been revised, it may be accessed by logging into the Contractor Prequalification Application System via the following link:
HTTPS://fdotwp1.dot.state.fl.us/ContractorPreQualification

Once logged in, select "View" for the most recently approved application, and then click the "Manage" and "Application Summary" tabs.

The company may apply for a Revised Certificate of Qualification at any time prior to the expiration date of this certificate according to Section 14-22.0041(3), Florida Administrative Code (F.A.C.), by accessing the most recently approved application as shown above and choosing "Update" instead of "View." If certification in additional classes of work is desired, documentation is needed to show that the company has performed such work.

All prequalified contractors are required by Section 14-22.006(3), F.A.C., to certify their work underway monthly in order to adjust maximum bidding capacity to available bidding capacity. You can find the link to this report at the website shown above.

Sincerely,

James E. Taylor II

James E. Taylor II, Prequalification Supervisor
Contracts Administration Office

JTII

Ron DeSantis, Governor

Melanie S. Griffin, Secretary

STATE OF FLORIDA
DEPARTMENT OF BUSINESS AND PROFESSIONAL REGULATION

CONSTRUCTION INDUSTRY LICENSING BOARD

THE GENERAL CONTRACTOR HEREIN IS CERTIFIED UNDER THE
PROVISIONS OF CHAPTER 489, FLORIDA STATUTES

MASCI, LEONEL ANDRES

MASCI GENERAL CONTRACTOR, INC.
5752 S RIDGEWOOD AVE
PORT ORANGE FL 32127

LICENSE NUMBER: CGC1518864

EXPIRATION DATE: AUGUST 31, 2026

Always verify licenses online at MyFloridaLicense.com

ISSUED: 05/13/2024

Do not alter this document in any form.

This is your license. It is unlawful for anyone other than the licensee to use this document.

Ron DeSantis, Governor

Melanie S. Griffin, Secretary

STATE OF FLORIDA
DEPARTMENT OF BUSINESS AND PROFESSIONAL REGULATION

CONSTRUCTION INDUSTRY LICENSING BOARD

THE UNDERGROUND UTILITY & EXCAVATION CO HEREIN IS CERTIFIED UNDER THE PROVISIONS OF CHAPTER 489, FLORIDA STATUTES

MASCI, LEONEL ANDRES

MASCI CORPORATION
5752 S RIDGEWOOD AVE
HARBOR OAKS FL 32127

LICENSE NUMBER: CUCA56854

EXPIRATION DATE: AUGUST 31, 2026

Always verify licenses online at MyFloridaLicense.com

ISSUED: 05/13/2024

Do not alter this document in any form.

This is your license. It is unlawful for anyone other than the licensee to use this document.

Ron DeSantis, Governor

Melanie S. Griffin, Secretary

FBPE
FLORIDA BOARD OF PROFESSIONAL ENGINEERS

STATE OF FLORIDA
DEPARTMENT OF BUSINESS AND PROFESSIONAL REGULATION
BOARD OF PROFESSIONAL ENGINEERS

THE PROFESSIONAL ENGINEER HEREIN IS LICENSED UNDER THE
PROVISIONS OF CHAPTER 471, FLORIDA STATUTES

MASCI, LEONEL ANDRES

5752 SOUTH RIDGEWOOD AVE
PORT ORANGE FL 32127

LICENSE NUMBER: PE68418

EXPIRATION DATE: FEBRUARY 28, 2027

Always verify licenses online at MyFloridaLicense.com

Do not alter this document in any form.

This is your license. It is unlawful for anyone other than the licensee to use this document.

Detail by Entity Name

Florida Profit Corporation
MASCI GENERAL CONTRACTOR, INC.

Filing Information

Document Number	P04000169369
FEI/EIN Number	20-2045800
Date Filed	12/17/2004
State	FL
Status	ACTIVE
Last Event	AMENDMENT
Event Date Filed	06/01/2010
Event Effective Date	NONE

Principal Address

5752 SOUTH RIDGEWOOD AVE
PORT ORANGE, FL 32127

Mailing Address

5752 SOUTH RIDGEWOOD AVE
PORT ORANGE, FL 32127

Registered Agent Name & Address

Ferreira, Leticia Maria Masci
5752 S RIDGEWOOD AVE
PORT ORANGE, FL 32127

Name Changed: 06/26/2025

Address Changed: 01/12/2021

Officer/Director Detail

Name & Address

Title President

MASCI, LEONEL
5752 SOUTH RIDGEWOOD AVE
PORT ORANGE, FL 32127

Title VP

MASCI, ANDRES
5752 SOUTH RIDGEWOOD AVE
PORT ORANGE, FL 32127

Title S

Masci, Ignacio
5752 S Ridgewood Ave
Port Orange, FL 32127

Title VP

Ferreira, Leticia Maria Masci
5752 SOUTH RIDGEWOOD AVE
PORT ORANGE, FL 32127

Annual Reports

Report Year	Filed Date
2024	02/08/2024
2025	02/05/2025
2025	06/26/2025

Document Images

06/26/2025 -- AMENDED ANNUAL REPORT	View image in PDF format
02/05/2025 -- ANNUAL REPORT	View image in PDF format
02/08/2024 -- ANNUAL REPORT	View image in PDF format
02/09/2023 -- ANNUAL REPORT	View image in PDF format
01/27/2022 -- ANNUAL REPORT	View image in PDF format
01/12/2021 -- ANNUAL REPORT	View image in PDF format
01/20/2020 -- ANNUAL REPORT	View image in PDF format
02/07/2019 -- ANNUAL REPORT	View image in PDF format
02/02/2018 -- ANNUAL REPORT	View image in PDF format
01/06/2017 -- ANNUAL REPORT	View image in PDF format
01/15/2016 -- ANNUAL REPORT	View image in PDF format
04/09/2015 -- AMENDED ANNUAL REPORT	View image in PDF format
01/09/2015 -- ANNUAL REPORT	View image in PDF format
04/03/2014 -- AMENDED ANNUAL REPORT	View image in PDF format
01/10/2014 -- ANNUAL REPORT	View image in PDF format
07/25/2013 -- AMENDED ANNUAL REPORT	View image in PDF format
02/19/2013 -- ANNUAL REPORT	View image in PDF format
04/09/2012 -- ANNUAL REPORT	View image in PDF format
01/06/2012 -- ANNUAL REPORT	View image in PDF format
01/20/2011 -- ANNUAL REPORT	View image in PDF format
06/01/2010 -- Amendment	View image in PDF format
05/17/2010 -- Amendment	View image in PDF format

Form **W-9**
(Rev. March 2024)
Department of the Treasury
Internal Revenue Service

Request for Taxpayer Identification Number and Certification

Go to *www.irs.gov/FormW9* for instructions and the latest information.

Give form to the requester. Do not send to the IRS.

Before you begin. For guidance related to the purpose of Form W-9, see *Purpose of Form*, below.

Print or type. See *Specific Instructions* on page 3.

1 Name of entity/individual. An entry is required. (For a sole proprietor or disregarded entity, enter the owner's name on line 1, and enter the business/disregarded entity's name on line 2.)

Masci General Contractor, Inc.

2 Business name/disregarded entity name, if different from above.

3a Check the appropriate box for federal tax classification of the entity/individual whose name is entered on line 1. Check only one of the following seven boxes.

☐ Individual/sole proprietor ☑ C corporation ☐ S corporation ☐ Partnership ☐ Trust/estate

☐ LLC. Enter the tax classification (C = C corporation, S = S corporation, P = Partnership) . . . . .

Note: Check the "LLC" box above and, in the entry space, enter the appropriate code (C, S, or P) for the tax classification of the LLC, unless it is a disregarded entity. A disregarded entity should instead check the appropriate box for the tax classification of its owner.

☐ Other (see instructions)

4 Exemptions (codes apply only to certain entities, not individuals; see instructions on page 3):

Exempt payee code (if any)

Exemption from Foreign Account Tax Compliance Act (FATCA) reporting code (if any)

(Applies to accounts maintained outside the United States.)

3b If on line 3a you checked "Partnership" or "Trust/estate," or checked "LLC" and entered "P" as its tax classification, and you are providing this form to a partnership, trust, or estate in which you have an ownership interest, check this box if you have any foreign partners, owners, or beneficiaries. See instructions . . . . . ☐

5 Address (number, street, and apt. or suite no.). See instructions.

5752 S. Ridgewood Avenue

Requester's name and address (optional)

6 City, state, and ZIP code

Port Orange, FL 32127

7 List account number(s) here (optional)

Part I Taxpayer Identification Number (TIN)

Enter your TIN in the appropriate box. The TIN provided must match the name given on line 1 to avoid backup withholding. For individuals, this is generally your social security number (SSN). However, for a resident alien, sole proprietor, or disregarded entity, see the instructions for Part I, later. For other entities, it is your employer identification number (EIN). If you do not have a number, see *How to get a TIN*, later.

Note: If the account is in more than one name, see the instructions for line 1. See also *What Name and Number To Give the Requester* for guidelines on whose number to enter.

Social security number

			–			–				

or

Employer identification number

2	0	–	2	0	4	5	8	0	0

Part II Certification

Under penalties of perjury, I certify that:

1. The number shown on this form is my correct taxpayer identification number (or I am waiting for a number to be issued to me); and
2. I am not subject to backup withholding because (a) I am exempt from backup withholding, or (b) I have not been notified by the Internal Revenue Service (IRS) that I am subject to backup withholding as a result of a failure to report all interest or dividends, or (c) the IRS has notified me that I am no longer subject to backup withholding; and
3. I am a U.S. citizen or other U.S. person (defined below); and
4. The FATCA code(s) entered on this form (if any) indicating that I am exempt from FATCA reporting is correct.

Certification instructions. You must cross out item 2 above if you have been notified by the IRS that you are currently subject to backup withholding because you have failed to report all interest and dividends on your tax return. For real estate transactions, item 2 does not apply. For mortgage interest paid, acquisition or abandonment of secured property, cancellation of debt, contributions to an individual retirement arrangement (IRA), and, generally, payments other than interest and dividends, you are not required to sign the certification, but you must provide your correct TIN. See the instructions for Part II, later.

Sign Here Signature of U.S. person [signature] Date 2/10/25

General Instructions

Section references are to the Internal Revenue Code unless otherwise noted.

Future developments. For the latest information about developments related to Form W-9 and its instructions, such as legislation enacted after they were published, go to *www.irs.gov/FormW9*.

What's New

Line 3a has been modified to clarify how a disregarded entity completes this line. An LLC that is a disregarded entity should check the appropriate box for the tax classification of its owner. Otherwise, it should check the "LLC" box and enter its appropriate tax classification.

New line 3b has been added to this form. A flow-through entity is required to complete this line to indicate that it has direct or indirect foreign partners, owners, or beneficiaries when it provides the Form W-9 to another flow-through entity in which it has an ownership interest. This change is intended to provide a flow-through entity with information regarding the status of its indirect foreign partners, owners, or beneficiaries, so that it can satisfy any applicable reporting requirements. For example, a partnership that has any indirect foreign partners may be required to complete Schedules K-2 and K-3. See the Partnership Instructions for Schedules K-2 and K-3 (Form 1065).

Purpose of Form

An individual or entity (Form W-9 requester) who is required to file an information return with the IRS is giving you this form because they

City of Port Orange Local Business Tax Receipt

CONTRACTOR - GENERAL (CLASS A)

City of Port Orange
Community Development
1000 City Center Circle
Port Orange, FL 32129
(386) 506-5602

CONTRACTOR - GENERAL (CLASS A) **License Number: L-0000001954**

Masci General Contractor Inc.
5752 RIDGEWOOD AVE
PORT ORANGE FL 32127

Fees Paid: **$100.00**
Issued Date: **08/05/2024**

08/05/2024 - 09/30/2025
Valid Dates

CERTIFICATE OF LIABILITY INSURANCE

DATE (MM/DD/YYYY): 11/12/2024

THIS CERTIFICATE IS ISSUED AS A MATTER OF INFORMATION ONLY AND CONFERS NO RIGHTS UPON THE CERTIFICATE HOLDER. THIS CERTIFICATE DOES NOT AFFIRMATIVELY OR NEGATIVELY AMEND, EXTEND OR ALTER THE COVERAGE AFFORDED BY THE POLICIES BELOW. THIS CERTIFICATE OF INSURANCE DOES NOT CONSTITUTE A CONTRACT BETWEEN THE ISSUING INSURER(S), AUTHORIZED REPRESENTATIVE OR PRODUCER, AND THE CERTIFICATE HOLDER.

IMPORTANT: If the certificate holder is an ADDITIONAL INSURED, the policy(ies) must have ADDITIONAL INSURED provisions or be endorsed. If SUBROGATION IS WAIVED, subject to the terms and conditions of the policy, certain policies may require an endorsement. A statement on this certificate does not confer rights to the certificate holder in lieu of such endorsement(s).

PRODUCER	CONTACT NAME: Julie Kuhlman
Brown & Brown Insurance Services, Inc. 300 N Beach Street Daytona Beach FL 32114	PHONE (A/C, No, Ext): (386) 239-5742 FAX (A/C, No): E-MAIL ADDRESS: Julie.Kuhlman@bbrown.com
INSURED Masci General Contractor, Inc Masci Construction Inc 5752 S Ridgewood Ave Port Orange FL 32127	INSURER(S) AFFORDING COVERAGE — NAIC # INSURER A : Allied World Surplus Lines Insurance Company — 24319 INSURER B : Starstone National Insurance Company — 25496 INSURER C : Great American Insurance Company — 16691 INSURER D : Bridgefield Casualty Insurance Company — 10335 INSURER E : Markel American Insurance Company — 28932 INSURER F : Indian Harbor Insurance Company — 36940

COVERAGES **CERTIFICATE NUMBER:** 24-25 **REVISION NUMBER:**

THIS IS TO CERTIFY THAT THE POLICIES OF INSURANCE LISTED BELOW HAVE BEEN ISSUED TO THE INSURED NAMED ABOVE FOR THE POLICY PERIOD INDICATED. NOTWITHSTANDING ANY REQUIREMENT, TERM OR CONDITION OF ANY CONTRACT OR OTHER DOCUMENT WITH RESPECT TO WHICH THIS CERTIFICATE MAY BE ISSUED OR MAY PERTAIN, THE INSURANCE AFFORDED BY THE POLICIES DESCRIBED HEREIN IS SUBJECT TO ALL THE TERMS, EXCLUSIONS AND CONDITIONS OF SUCH POLICIES. LIMITS SHOWN MAY HAVE BEEN REDUCED BY PAID CLAIMS.

INSR LTR	TYPE OF INSURANCE	ADDL INSD	SUBR WVD	POLICY NUMBER	POLICY EFF (MM/DD/YYYY)	POLICY EXP (MM/DD/YYYY)	LIMITS	
A	[X] COMMERCIAL GENERAL LIABILITY [ ] CLAIMS-MADE [X] OCCUR GEN'L AGGREGATE LIMIT APPLIES PER: [ ] POLICY [X] PRO-JECT [ ] LOC [ ] OTHER:			6004-1592	08/08/2024	08/08/2025	EACH OCCURRENCE DAMAGE TO RENTED PREMISES (Ea occurrence) MED EXP (Any one person) PERSONAL & ADV INJURY GENERAL AGGREGATE PRODUCTS - COMP/OP AGG [ ]	$ 2,000,000 $ 500,000 $ 5,000 $ 2,000,000 $ 4,000,000 $ 4,000,000 $
B	AUTOMOBILE LIABILITY [ ] ANY AUTO [ ] OWNED AUTOS ONLY [X] SCHEDULED AUTOS [ ] HIRED AUTOS ONLY [X] NON-OWNED AUTOS ONLY			APB4000035#2	08/08/2024	08/08/2025	COMBINED SINGLE LIMIT (Ea accident) BODILY INJURY (Per person) BODILY INJURY (Per accident) PROPERTY DAMAGE (Per accident) PIP	$ 1,000,000 $ $ $ $ 10,000
C	[X] UMBRELLA LIAB [X] OCCUR [ ] EXCESS LIAB [X] CLAIMS-MADE [ ] DED [X] RETENTION $ 0			TUU 4-05-55-16-03	08/08/2024	08/08/2025	EACH OCCURRENCE AGGREGATE Prods/C-ops	$ 4,000,000 $ 4,000,000 $ 4,000,000
D	WORKERS COMPENSATION AND EMPLOYERS' LIABILITY ANY PROPRIETOR/PARTNER/EXECUTIVE OFFICER/MEMBER EXCLUDED? (Mandatory in NH) Y/N [ ] If yes, describe under DESCRIPTION OF OPERATIONS below	N/A		0196-58610	08/08/2024	08/08/2025	[X] PER STATUTE [ ] OTH-ER E.L. EACH ACCIDENT E.L. DISEASE - EA EMPLOYEE E.L. DISEASE - POLICY LIMIT	 $ 1,000,000 $ 1,000,000 $ 1,000,000
E	Inland Marine			MKLM1IM0002689	08/08/2024	08/08/2025	Leased/Rented Per Item: Leased/Rented Per Occ: INSTALLATION	$750,000 $1,500,000 $500,000

DESCRIPTION OF OPERATIONS / LOCATIONS / VEHICLES (ACORD 101, Additional Remarks Schedule, may be attached if more space is required)

SEE NOTES FOR POLICY COVERAGE FORMS
FOR BIDDING PURPOSES ONLY

CERTIFICATE HOLDER

MASCI GENERAL CONTRACTORS INC
5752 S. RIDGEWOOD AVENUE
PORT ORANGE FL 32127

CANCELLATION

SHOULD ANY OF THE ABOVE DESCRIBED POLICIES BE CANCELLED BEFORE THE EXPIRATION DATE THEREOF, NOTICE WILL BE DELIVERED IN ACCORDANCE WITH THE POLICY PROVISIONS.

AUTHORIZED REPRESENTATIVE

© 1988-2015 ACORD CORPORATION. All rights reserved.

The ACORD name and logo are registered marks of ACORD

AGENCY CUSTOMER ID: _____

LOC #: _____

ADDITIONAL REMARKS SCHEDULE

AGENCY	NAMED INSURED
Brown & Brown Insurance Services, Inc.	Masci General Contractor, Inc
POLICY NUMBER	
CARRIER / NAIC CODE	EFFECTIVE DATE:

ADDITIONAL REMARKS

THIS ADDITIONAL REMARKS FORM IS A SCHEDULE TO ACORD FORM,

FORM NUMBER: 25 FORM TITLE: Certificate of Liability Insurance: Notes

PROFESSIONAL / POLLUTION LIABILITY:
POLICY NUMBER: PEC005962603
08/08/2024 – 08/08/2025
INSURER:F
PROFESSIONAL LIABILITY: $1,000,000
POLLUTION LIABILITY: $1,000,000
AGGREGATE LIMIT: $2,000,000

WORKERS COMPENSATION (MASCI CONSTRUCTION, INC)
POLICY NUMBER: 0196-58609
08/08/2024 - 08/08/2025:
INSURER: D
- E.L. EACH ACCIDENT $1,000,000
- E.L. DISEASE - EA EMPLOYEE $1,000,000
- E.L. DISEASE - POLICY LIMIT $1,000,000

EXCESS AUTO LIABILITY ($1M X $3M)
CARRIER: UPLAND SPECIALTY INSURANCE COMPANY / NAIC: 16988
POLICY # USXTL0712524
TERM: 08/08/2024 - 08/08/2025
EACH OCCURRENCE: $1,000,000
AGGREGATE: $1,000,000
EXCESS OVER PRIMARY AUTO & UMBRELLA (AUTO ONLY)

CURRENT BLANKET POLICY FORMS

GENERAL LIABILITY
1) CG2010 1219 - ADDITIONAL INSURED-OWNERS, LESSEES OR CONTRACTORS - AUTOMATIC STATUS WHEN REQUIRED IN CONSTRUCTION AGREEMENT WITH YOU (ADDITIONAL INSURED - ONGOING OPERATIONS)
2) CG2037 1219- ADDITIONAL INSURED – OWNERS, LESSEES OR CONTRACTORS – COMPLETED OPERATIONS (ADDITIONAL INSURED - COMPLETED OPERATIONS)
3) CG2034 1219 - ADDITIONAL INSURED – LESSOR OF LEASED EQUIPMENT – AUTOMATIC STATUS WHEN REQUIRED IN LEASE AGREEMENT WITH YOU
4) CG2404 1219 - WAIVER OF TRANSFER OF RIGHTS OF RECOVER AGAINST OTHERS TO US (WAIVER OF SUBROGATION)
5) CG2001 1219 - PRIMARY AND NON-CONTRIBUTORY - OTHER INSURANCE CONDITION

AUTO LIABILITY
1)CA2048B 1013 - DESIGNATED INSURED - BLANKET
2) CA0444B 1013 -WAIVER OF SUBROGATION- BLANKET

WORKERS COMPENSATION
1) WC000313 0484 - WAIVER OF OUR RIGHT TO RECOVER FROM OTHERS ENDORSEMENT (WAIVER OF SUBROGATION)

UMBRELLA LIABILITY
1.) GAI6002 0697 - THE PROTECTOR COMMERCIAL UMBRELLA COVERAGE FORM (ADDITIONAL INSURED, WAIVER OF SUBROGATION)
THE UMBRELLA POLICY APPLIES IN EXCESS OF THE GENERAL LIABILITY, AUTO LIABILITY AND EMPLOYERS LIABILITY

INLAND MARINE
1) IM7902 0112 - LOSS PAYABLE SCHEDULE (LOSS PAYEE)

POLLUTION LIABILITY
1) EVPCPOCCP 0424 - (ADDITIONAL INSURED, PRIMARY NON-CONTRIBUTORY, WAIVER OF SUBROGATION)

© 2008 ACORD CORPORATION. All rights reserved.
The ACORD name and logo are registered marks of ACORD

- 5 year -

COMPLETED CONTRACTS AND REFERENCES					
CONTRACT AMOUNT	**NAME OF PROJECT**	**YEAR COMPLETED**	**LOCATION**	**PROJECT CONTACT**	**SCOPE**
$500,000.00	E5x97-RO, roadway repair	2024	Volusia, Flagler, Seminole, Brevard County	FDOT - District 5 - 605 Suwannee St. Tallahassee, FL.	roadway repair, as needed
$1,023,128.69	City of Ormond Beach 2023 Road Resurfacing	2024	City of Ormond Beach	City of Ormond Beach, Public Works, 22 S. Beach Street, Room 104, Ormond Beach, Fl 32174m 386-676-3269	2023 Road Resurfacing
$16,029,260.78	CFX - SR 417 Resurfacing	2024	CFX	Central Florda Expressway Authority,	Resurfacing
$4,343,700.56	T5742- Wickham Rd @I95 Ramp	2024	Brevard County	FDOT - District 5 - 605 Suwannee St. Tallahassee, FL.	improvements, road widening
$787,145.48	E58A3 (sub to Chinchor)	2024	Brevard County	FDOT - 719 S. Woodland Blvd., Deland, FL 32720	improvements & resurfacing
$844,923.00	G1T27- Graham Swamp Trail	2023	Flagler County	Flagler County Board of County Commissioners	Trail and Pedestrain Bridge over State Road 100
$8,780,809.70	T5711 - Bridge Fiske	2023	Brevard County	FDOT - District 5 - 605 Suwannee St. Tallahassee, FL.	SR 519 (Fiske Blvd) Bridge
$13,106,590.67	Howland Blvd. Deltona, Widening	2022	Volusia County	Howland Boulevard, Deltona, FL	Road Widening & Drainage Improvements
$ 17,848,966.12	T5642 - SR46 Seminole County	2022	Seminole County	FDOT - District 5 - 605 Suwannee St. Tallahassee, FL.	Road Construction
$ 399,844.00	City of Ormond Beach Roadway Resurfacing	2022	Volusia County	Alex Schumann, 22 South Beach St, Ormond Beach, FL.	Resurfacing
$ 165,989.45	City of Titusville Neighborhood Services Department	2021	Brevard County	Kevin Cook, City of Titusville, 555 S. Washington Ave., Titusville, FL. (386) 567-3845	Minor Repairs
$ 1,556,034.12	City of Titusville Annual Resurfacing - Public Works	2021	Brevard County	William Larese, 555 S. Washington Ave., Titusville, FL. (321) 567-3682	Resurfacing

$ 237,197.28	City of Lake Mary Citywide Milling & Paving	2021	Seminole County	Kevin Smith, City of Lake Mary, 911 Wallace Ct. Lake Mary, FL.	Milling & Paving
$ 345,460.13	City of Ormond Beach Roadway Repaving	2021	Volusia County	Alex Schumann, 22 South Beach St, Ormond Beach, FL.	Repaving
$ 2,319,234.97	City of Palm Coast Street Resurfacing	2021	Flagler County	Tyler Gibson, City of Palm Coast, 160 Lake Ave Palm Coast, FL. (386) 986-3730	Resurfacing
$ 5,811,030.74	T5681 -SR 400 (I-4) Seminole County	2021	Seminole County	FDOT - District 5 - 605 Suwannee St. Tallahassee, FL.	Road Construction
$ 12,045,287.37	Riverwalk Phase III	2021	Seminole County	City of Sanford, 300 N. Park Ave. Sanford, FL. 32771, Bilal Iftikhar, (407) 688-5012	Trail Construction
$ 1,331,946.72	Fort Florida Rd	2021	Volusia County	Volusia County, 123 W. Indiana Avenue, Deland, FL	Road Construction
$ 4,976,836.09	T5680 Seminole County	2021	Seminole County	FDOT - District 5 - 605 Suwannee St. Tallahassee, FL.	Road Construction
$ 4,878,954.76	Williamson Blvd Widening	2021	Volusia County	Volusia County, 123 W. Indiana Avenue, Deland, FL.	Road Expansion
$ 4,979,528.50	Design Build	2020	Volusia County	Volusia County, 123 W. Indiana Avenue, Deland, FL.	Design Build
$ 1,514,579.45	S. Park Ave Stormwater	2020	Seminole County	City of Sanford, 300 N. Park Ave. Sanford, FL. 32771, Bilal Iftikhar, (407) 688-5012	Stormwater Improvements
$ 2,204,501.12	T5670, SRA1A & SR520	2020	Brevard County	FDOT - District 5 - 605 Suwannee St. Tallahassee, FL.	Road Construction
$ 4,991,772.04	T5660 - US 1 @ SR 44	2020	Volusia County	FDOT - District 5 - 605 Suwannee St. Tallahassee, FL.	Road Construction
$ 28,838,467.02	T5636 - I-95 - Palm Coast Pkwy to Flagler/St Johns County Line	2020	Flagler/St Johns County	FDOT - District 5 - Ronald Meade (386) 740-3401 Ron.Meade@dot.state.fl.us	Road Construction
$ 7,136,709.34	T5625 SR 414 - Maitland Blvd	2020	Orange County	FDOT - District 5 - 605 Suwannee St. Tallahassee, FL.	Road Construction

REFERENCES - PROJECTS COMPLETED

Project Name/Location:	FDOT #T5767, SR 528, Brevard County, Florida SR 528, from SR 5 to E of SR 3, Brevard County, Florida
Type of Project/Services:	milling, paving, grading, drainage, concrete, guardrail, signs/signals, striping
Owner/Agent:	Florida Department of Transporation / Pinnacle Doug Schumann dschumann@pinnaclecei.com (407) 496-9627
Contract Amount:	$ 10,858,007.49
Completed:	2024

Project Name/Location:	FDOT #T5727, SR 5, Volusia County, Florida SR 5, from Brevard Co Line to South St, Volusia County, Florida
Type of Project/Services:	milling, paving, grading, drainage, concrete, guardrail, signs, striping
Owner/Agent:	Florida Department of Transporation / Mehta Engineering Aun Shah ashah@mehtaeng.com (850) 341-6114
Contract Amount:	$ 6,972,041.32
Completed:	2022

Project Name/Location:	FDOT #E57A1, SR 600, Volusia County, Florida SR 5, from Brevard Co Line to South St, Volusia County, Florida
Type of Project/Services:	milling, paving, grading, drainage, concrete, signs/signals, striping
Owner/Agent:	Florida Department of Transporation / AE Engineering Terry Phillips tphillips@aeengineeringinc.com (407) 743-2799
Contract Amount:	$ 5,312,936.32
Completed:	2023

Project Name/Location:	Graham Swamp Trail & Pedestrian Bridge over SR 100, Flagler County, Florida Graham Swamp Trail, Palm Coast, Florida
Type of Project/Services:	milling, paving, bridge, grading, drainage, concrete, signs/signals, striping
Owner/Agent:	Flagler County Board of County Commissioners Amy Stroger astroger@flaglercounty.gov (386) 313-4047
Contract Amount:	$ 9,478,640.33
Completed:	2023

REFERENCES - PROJECTS COMPLETED

Project Name/Location:	FDOT #E57A4, SR 442, Volusia County, Florida SR 442, from W of I-95 to US 1, Volusia County, Florida
Type of Project/Services:	milling, paving, grading, drainage, concrete, signs/signals, striping
Owner/Agent:	Florida Department of Transporation / Mehta Engineering Aun Shah ashah@mehtaeng.com (850) 341-6114
Contract Amount:	$ 7,425,368.89
Completed:	2024 *****FDOT - Smoothest Pavement of the Year Award 2024*****

Project Name/Location:	FY24 Annual Road Resurfacing, Titusville, Florida Various Streets
Type of Project/Services:	milling & paving
Owner/Agent:	City of Titusville Kevin Cook kevin.cook@titusville.com (321) 383-5704
Contract Amount:	$ 1,589,544.95
Completed:	2024

Project Name/Location:	2024 Citywide Paving Project, City of Ormond Beach, Florida Various Streets
Type of Project/Services:	milling & paving
Owner/Agent:	City of Ormond Beach Alex Shumann alex.schumann@ormondbeach.org (321) 567-3775
Contract Amount:	$ 791,358.35
Completed:	2024

Project Name/Location:	SR 417 Resurfacing, Orlando, Florida SR 417, SR 528 to Berry Dease Rd, Orange County, Florida
Type of Project/Services:	milling & paving
Owner/Agent:	Central Florida Expressway Authority (CFX) / RK&K Chas Starr cstarr@rkk.com (407) 923-4908
Contract Amount:	$ 16,029,260.78
Completed:	2024

Project Name/Location:	FDOT #E5X97, Volusia, Flagler, Seminole & Brevard County Florida Resurfacing Various Streets
Type of Project/Services:	milling & paving
Owner/Agent:	Florida Department of Transporation (FDOT) Brahim Sahraoui brahim.sahraoui@dot.state.fl.us
Contract Amount:	$ 500,000.00 budgetary ceiling
Completed:	2023

Masci Equipment List - Owned and Available

Equipment #	Year	Make/Model	VIN/Serial #
		DUMP TRUCKS	
DPT001-4435	2002	Mack RD688S	1M2P267C82M064435
DPT002-6387	2006	Mack CV713	1M2AG11C36M036387
DPT007-8803	2010	Mack GU713	1M2AX07C2AM008803
DPT010-6681	2009	Mack GU713	1M2AX07CX9M006681
DPT011-8175	2010	Mack GU713	1M2AX07CXAM008175
DPT012-1964	2007	Mack CV713	1M2AG11C67M061964
DPT014-7057	2009	Mack GU713 - Black	1M2AX04CX9M007057
DPT015-6201	2009	Mack GU713 - Orange	1M2AX04C89M006201
DPT016-7375	2009	Mack GU713 - Orange	1M2AX04C29M007375
DPT020-0621	2000	Mack RD690S - White	1M2P264C4YM030621
DPT021-8147	2010	Mack GU713 - Orange	1M2AX04CXAM008147
DPT023-9196	2004	Mack CV713 - White/Red	1M2AG11C84M009196
DPT024-4764	2007	Mack CTP713 - White	1M2AT04C87M004764
DPT025-4762	2007	Mack CTP713 - White	1M2AT04C47M004762
DPT027-7238	2009	Mack GU713 - Blue	1M2AX09C29M007238
DPT029-7236	2009	Mack GU713 - Blue	1M2AX09C99M007236
DPT030-7237	2009	Mack GU713 - Blue	1M2AX09C09M007237
DPT031-7352	2016	Mack CU713 - White	1M2AX09C5GM027352
DPT032-3101	2010	Kenworth T800 - White	1NKDL40X4AJ263101
DPT033-1617	2015	Kenworth T800	1NKDX4TXXFJ441617
DPT034-8856	2011	Mack GU713 - White/Red Body	1M2AX04C4BM008856
DPT039-6293	2023	MACK GR64B	1M2GR3GC4PM036293
DPT040-8005	2018	MACK GU713	1M2AX09C7JM038005
DPT041-8008	2018	MACK GU713	1M2AX09C2JM038008
DPT042-4367	2021	FRHT M2106	3ALACXFC4MDMS4367
DPT043-8757	2024	MACK GR64F	1M2GR4GC7RM038757
DPT044-8751	2024	MACK GR64F	1M2GR4GC6RM038751
DPT045-1876	2023	MACK GR64F	1M2GR4GC6PM031876
DPT046-8531	2025	MACK GR64F	1M2GR4GC1SM048531
DPT047-4653	2025	MACK GR64F	1M2GR4GC6SM044653
		TRACTOR TRAILER TRUCKS	
TTR003-6404	2010	Mack CH613	1M1AN07Y0AN006404
TTR004-6532	2009	Mack GU713	1M2AX07C49M006532
TTR005-7559	2009	Mack GU713	1M1AX09Y09M007559
TTR006-6784	2015	MACK - CXU613	1M1AW02Y3FM046784
TTR007-6737	2015	MACK - CXU613	1M1AW02Y5FM046737
TTR008-4863	2015	Peterbilt 389	1XPXP4EXXFD274863
TTR009-0499	2024	KENWORTH W990 HEAVY HAUL	1XK1P4EX0RJ370499
TTR010-0277	2023	MACK P164T DAY CAB	1M1PN4GY6PM010277
		SERVICE TRUCKS	
SER001-8265	2006	Freightliner M2-106	1FVACXCS86HV78265
SER002-2530	2015	Dodge Ram 5500	3C7WRNFL9FG502530
SER003-0906	2009	GMC C-5500 (BLUE)	1GDG5C3969F400906
SER003-8585	2016	Dodge Ram 4500	3C7WRLBLOGG148585
SER004-0983	2004	Freightliner FL-70	1FVABSDC84HN00983
SER005-6684	2007	International 4300	1HTMMAAN47H456684

SER006-1228	2016	Isuzu NQR Service Truck - RED	JALE5W161G7901228
SER007-2175	2011	RAM 5500 SLT - White	3D6WA7EL7BG502175
SER008-1095	2015	Freightliner M2-106	3ALACWDT9FDGC1095
SER009-0052	2023	ISUZU FTR	54DK6S1FXPSA50052
SER010-0243	2025	Freightliner M2-106 plus	1FVHCYFEXSHVK0243
SER011-1731	2025	ISUZU NRR	JALE5W166S7P01731
SER012-0588	2024	RAM 5500	3C7WRNBL8RG240588
		WATER TRUCKS	
WT001-3498	1992	Ford Water Truck F700	1FDXK74C8NVA33498
WT002-4648	1995	International 4700	1HTSMABM2SH664648
WT003-6800	1999	International 4700	1HTSCAAM4XH676800
WT005-6304	2001	Isuzu COE Water Truck	JALB4B14817016304
WT006-9028	2015	Freightliner m2 106 medium duty	3ALACXDT3FDGA9028
WT007-9109	2014	Freightliner m2	3ALACXCY4EDFV9109
		MISC. TRUCKS	
FBT003-8944	2000	Int'l. Flatbed 4700	1HTSCABM2YH228944
FBT-4351	2010	Isuzu Flatbed NPR	JALC4W165A7004351
FBT-3115	1998	International 4900	1HTSDAAN8WH523115
FBT-8642	1994	Ford F-700 Flat Bed	1FDWK74C0RVA18642
FBT-1476	1970	Mack Dump	DM487S1476
FBT-0296	2018	Isuzu Flatbed NPR	JALB4W176J7F00296
FBT-0943	2013	Isuzu Flatbed NPR	JALB4W174D7400943
FBT-7022	2023	ISUZU NRR	JALE5VV162P7307022
FBT-3678	2009	INTERNATIONAL 7400 6X4	1HTWGAAR29J143678
		SUPERVISOR / MGMT TRUCKS	
PKU006-6028	2006	Chevy C-1500 - Blue	2GCEC13T261226028
PKU011-8590	2011	Toyota Tundra	5TFEY5F17BX108590
PKU013-0862	2012	Toyota Tundra	5TFRM5F1XCX050862
PKU014-2687	2012	Toyota Tundra	5TFDW5F11CX212687
PKU-3096	2018	Toyota Tundra 4x2 - White	5TFRM5F13JX123096
PKU-0419	2017	Toyota Tundra- White	5TFRM5F1XHX110419
PKU-6039	2019	Toyota Tundra - White	5TFRM5F1XKX136039
PKU-7700	2016	Nissan Titan XD	1N6BA1F43GN517700
PKU-7962	2022	Chevy Silverado 1500	3GCNAAED9NG567962
PKU-7747	2019	Toyota Tundra	5TFAY5F18KX797747
PKU-2549	2019	Toyota Tundra	5TFHY5F18KX782549
		BACKHOES	
BH004-3882	2010	Caterpillar 420E	HLS03882
BH005-0543	2013	Caterpillar 420 FIT	JWJ00543
		DOZERS	
DZ003-0351	2013	Caterpillar D5K	YYY00351
DZ004-9851	2009	John Deere 650J	JX169851
DZ006-1927	2013	Komatsu D65WX-17	1927
		EXCAVATORS	
EXC001-7358	1987	Komatsu PC 200	27358
EXC006-3812	2006	Kobelco SK135SRLC	YH04-03812
EXC007-0616	2006	Hyundai ROBEX360LC-7	NA0110616
EXC009-0074	2007	Hyundai ROBEX450LC-7A	NB0310074
EXC010-0062	2007	Hyundai ROBEX450LC-7A	NB0310062

EXC011-0380	2008	Hyundai ROBEX210LC-7A	N6120380
EXC012-1463	2009	Hitachi ZX135HYD	FF01SCQ071463
EXC013-0215	2010	Komatsu PC308USLC-3	20215
EXC014-0288	2010	Komatsu PC308MSLC	20288
EXC015-0413	2012	Caterpillar 304ECR	TTN00413
EXC016-0321	2012	Caterpillar M318D	D8W00321
EXC017-0136	2008	Komatsu PC308USLC-8	30136
EXC-6339	2006	Komatsu PC50MR-2	6339
EXC-8614	2017	Kubota KX040-4R1T w/ 6 way Blade	28614-24QC
EXC-0464	2019	Kubota KX057-4R1A Excavator	30464
EXC-0274	2017	Hyundai 220LC-9A Hydraulic Excavator	HHKHZ610VE0000274
EXC-0117	2011	Hyundia Robex 480LC-9 Track	HHIHQB01LB0000117
EXC-1051	2005	Kobelco SK250	LL09U1051
EXC-1243	2019	John Deere 135G FT	1FF135QXAKF501243
EXC-5525	2020	KOBELCO SK140SRLC-7	YY09045525
EXC-5452	2017	Komatsu PC360LC-11	A35452
EXC-0364	2022	HYUNDAI HX210AL HYDRAULIC	CE0000364
EXC-1425	2018	LINKBELT 300X4 HYDRAULIC	LBX300Q7NJHEX1425
EXC-3616	2022	JOHN DEERE 85G	1FF085GXTNJ023616
EXC-0106	2022	KUBOTA KX060-5 HYDRAULIC	KBCDZ37EHN3G10106
EXC-0191	2008	KOMATSU PC308USLC-3E0	KMTPC160A02030191
EXC-1930	2023	HYUNDAI R35Z	HHKHMH04LE0001930
EXC-1485	2020	JOHN DEERE 135G HYDRAULIC	1FF135GXLKF501485
EXC-1490	2023	LINK BELT 75X3	LBX075Q6NNHEX1490
EXC-2184	2023	HYUNDAI R35Z-9A	HHKHMH04VE0002184
EXC-1155	2018	LINKBELT 490X	LBX49007NHHEX1155
EXC-1102	2023	KOBELCO SK55SRX-7	PS05061102
EXC-0189	2024	HITACHI ZX50U-5N	HCMAED60P00300189
EXC-0317	2024	MIVA VA 20	VA20240317
EXC-1921	2021	LINK-BELT 145X4DZ	LBX145Q7NLHEX1921
EXC-0019	2025	HYUNDAI HX355ALCRD	DWGCECHZHR1010019
		LOADERS	
LDR002-7045	2006	John Deere 444J	DW444JZ607045
LDR003-1702	2006	John Deere 444J	DW444JZ611702
LDR004-7637	2006	John Deere 544J	DW544JZ607637
LDR005-7297	2006	John Deere 544J	DW544JZ607297
LDR007-0768	2006	Hyundai HL757-7	LD0110768
LDR008-7877	2007	John Deere 544J	DW544JZ607877
LDR010-0090	2008	Hyundai HL740-7A	LF0710090
LDR015-2020	2012	John Deere 544K	1DW544KZEBD642020
LDR016-1131	2011	John Deere 544K	1DW544KZTBD641131
LDR017-9761	2017	John Deere 544KII	1DW544KXEHF679761
LDR019-6145	2017	Case 621F Rubber Tired	NGF236145
LDR020-6291	2017	Case 521F Rubber Tired	6291
LDR023-1729	2021	John Deere 544P	1DW544PAPMLZ11729
LDR024-2012	2021	John Deere 544K-II	1DW544KZLHF682012
LDR025-0876	2022	HYUNDAI HL940	HHKHW400PK0000876

LDR026-0354	2018	HYUNDAI HL960	HHKHW600KI0000354
LDR027-0711	2020	HYUNDAI HL960	HHKHW600EL0000711
LDR029-0433	2022	HYUNDAI HL940A	HHKHWL40KL0000433
LDR030-0401	2023	JOHN DEERE 544-G TIER	1YN544GAHPLA00401
LDR031-0464	2023	JOHN DEERE 544-G TIER	1YN544GAEPLA00464
LDR032-0242	2024	HYUNDAI HL975	HHKHW770KL0000242
LDR033-8917	2024	HITACHI ZW95-6C	W09P10355RBA08917
LDR034-6350	2023	CASE 321F	FNH321FHNPH06350
		SWEEPERS	
SWP002-6191	2006	Lay Mor 6HC	26191-002
SWP004-3160	2008	Lay Mor 8HC	33160
SWP005-2223	2008	Lay Mor 8HC	32223
SWP006-3525	2010	Lay Mor 8HC	33525
SWP009-7923	2012	Kubota MX5100	SN57923
SWP010-7285	2016	Lay Mor Sweepster SM300	SN37285
SWP-5739	2014	John Deere 5055E Broom Tractor	1LV5055ECEY245739
SWP-9619	2008	Rosco 4820 Broom	49619
SWP-7791	2015	Rosco Sweep Pro 4930	127791
SWP-6883	2019	Kubota MX5200HST Tractor	66883
SWP-4320	2013	Lay Mor SM300	34320
SWP-4276	2013	Lay Mor 8HC	34276
SWP-4344	2013	Lay Mor 8HC	34344
SWP-6595	2018	FRHT M2 W/ JOHNSTON ES351	1FVACXFC9KHKL6595
SWP-2776		Kubota L4760	42776
SWP-7719	2022	KUBOTA MX5400	17719
SWP-7326	2019	ROSCO RB50 BROOM`	207326
SWP-2562	2024	ODRA MT4H ROAD SWEEPER/CHEVY 5500XD	JALEEW165R7302562
SWP-0817	2022	LAYMOR SM300	40817
SWP-1477	2021	ROSCO NV55	NV55-291477
		ROLLERS	
RL006-5607	2007	Ingersoll Rand SD450-TF	185607
RL007-1863	2007	Bomag BW-211-D3	9.01581E+11
RL008-1060	2008	Bomag BW-145-DH3	9.01581E+11
RL011-0962	2008	Caterpillar CB-434D	CNH00962
RL012-0469	2013	Caterpillar CB-534D	EAA00469
RL013-1074	2010	Caterpillar CB-434D	CNH01074
RL-0152	1999	Dynapac CS141	21720152
RL-9813	2014	Leeboy/Rosco 915	79813
RL-2235	1984	Hyster C340B Tandem	B146C-2235F
RL-0637	2012	Hamm HD140VO Asphalt Roller	H1840637
RL-1786	2014	Sakai SW850II Asphalt Roller	4SW56-501786
RL-0177	2014	Sakai SW850II Asphalt Roller	4SW56-50177C
RL-0254	2015	Hamm H7i	H2220254
RL-2749	2019	Hamm HD12VV	H2302749
RL-0798		HYUNDAI HR30T-R	3603110E120798

RL-1065	2012	HAMM HD 70	H1871065
RL-1486	2018	BOMAG BW211D-5 84" SMOOTH DRUM	101586081486
RL-0264		Sakai SW850ND	4SW56-50264
RL-1239		DEMO DYNAPAC CC1000	31239
RL-2122	2008	LEEBOY/TRUPAC 915	915-52122
RL-3405	2022	DYNAPAC CC950 DOUBLE DRUM	10000381CNA033405
RL-6894	2023	HAMM HD12VV ASPHALT ROLLER	WGH0H230EHAA06894
RL-6424	2023	DYNAPAC CC950 DOUBLE DRUM	10000381PPA036424
RL-7018	2023	DYNAPAC CA1400D	10000186EPA037018
RL-3880	2022	DYNAPAC CA3500D	33880
RL-1231	2024	BOMAG BW120AD-5	961880891231
RL-1050	2022	BOMAG BW206AD-5	101921811050
RL-0354	2019	HAMM HD120IVO	WGH0H243VHAA00354
RL-1101	2025	BOMAG BW28RH	961538501101
SKID STEERS			
SKD006-1423	2011	Caterpillar 279C	MBT01423
SKD-1569	2017	Case SV185	NHM431569
SKD-4158	2016	Takeuchi TL8RW	200804158
SKD-4838	2019	Caterpillar 246D Skid Steer	BYF04838
SKD-4835	2019	Caterpillar246D	BYF04835
SKD-6558	2020	John Deere 333G	1T0333GKPLF386558
SKD-0261	2014	Cat 236D skid steer loader	CAT0236DHBGZ00261
SKD-1368	2013	Takeuchi TL 230	223101368
SKD-0246	2020	Takeuchi TL8R20-R	408000246
SKD-2600	2022	Takeuchi TL8R-2CH	408002600
SKD-7498	2021	John Deere 332G	1T00332GMLMF397498
SKD-2732	2022	Takeuchi TL8R-2	408002732
SKD-0483		Takeichi TL8R2 Track Loader	408000483
SKD-4552	2022	MANITOU 1350RT TRACK LOADER	MAN1350TC0D304552
SKD-6239	2021	JOHN DEERE 325G RUBBER TRACK	1T0325GKKMJ406239
SKD-0862	2023	CAT 246D3	CAT0246DKT9Z00862
SKD-4046	2023	JOHN DEERE 325G	1T0325GKEPJ454046
SKD-5269	2023	TaKeuchi TL8R-2	408005269
SKD-5975	2023	JOHN DEERE 325G	1T0325GKTPJ455975
SKD-4052	2021	JOHN DEERE 333G	1T0333GMLMF404052
SKD-1144		CAT 246D3	CAT0246DAT9Z01144
PAVING EQUIPMENT			
PX008-0977	2014	Hamm HD120VO	H1840977
PX009-3043	2014	Roadtec Paver 190E	RP190E-X3043
PX010-0008		Blaw-Knox RW-100 Road Widener	0980-008
PX011-6389	2014	International Leeboy MAXIII	1HTWAAAN8DJ196389
PX012-1327	2017	Wirtgen W200i Milling Machine	14201327
PX014-0731	2004	Roadtec SB2500C Shuttle Buggy	731
PX015-0002	2019	Kenworth Tack Truck w/Etnyre Centennial Tank	2NKHHM7X9KM300002 / S7678
PX017-0738	2004	Roadtec SB2500C Shuttle Buggy	SB2500C-738
PX018-1133	2014	CAT Weiler E1250A Shuttle Buggy	1133
PX019-0008	2019	Kenworth Tack Truck w/Etnyre Centennial	2NKHHM7XXKM300008
PX020-1034	2015	Wirtgen W210i Milling Machine	15201034
PX021-0049	2017	Vogele 2003-3i	975.0049
PX022-0117	2018	VOGELE SUPER 1300-3i	14110117

PX023-0071	2017	VOGELE SUPER 2003-3i	9750071
PX024-1165	2016	Wirtgen W210i Milling Machine	15201165
PX025-0054	2017	VOGELE 2003-3I PAVER	975.0054
PX026-0067	2017	VOGELE 2003-3I PAVER	975.0067
PX027-0034	2020	Wirtgen W220Fi tracked cold planer	11220034
PX028-2963	2024	CAT PC306 24" HIGH FLOW COLD PLANER	0ERC02963
PX029-3237	2020	DYNAPAC MF2500CS	10002459LKG003237
PX030-1002		BOMAG BMF2500	1002
PX031-3045	2024	KENWORTH T380	2NK4HM7X5RM353045
PX032-0552	2025	VOGELE SUPER 1700-3i	WGV01982TJVA00552
		ROAD GRADERS	
RG002-9379		Leeboy Grader 685B	49379
RG004-5433	2015	Case 865B	NFAF05433
RG005-0196	2019	SANY SMG200 14'	PY1220BH0196
RG006-0013	2019	SANY SMG200 12'	PY1220BJ0013
		TRAILERS	
TRL005-9077	1994	Wabash Flatbed Trailer	1JJF45266RL249077
TRL006-0127	2006	Lark Storage Trailer	5RTBE12136D000127
TRL007-912T	2006	Lark Storage Trailer	5RTBE12136D99912T
TRL010-0216	2007	Witzco Challenger / RN35	1W8B21F3X7S000216
TRL012-5177	2009	VMA/Pace/Cargo	4FPUB14259G135177
TRL013-3646	2009	EASD Red Tilt Trailer ET20-14	4YZET202691013646
TRL016-9535	2012	Haulmark Utility	16HCB1013CG099535
TRL017-3710	2013	Big T Black / Trailer	16VNX1627D3C73710
TRL018-0753	2013	Freedom Trailer	5WKBE1620D1020753
TRL019-4412	2013	Bendron/Titan Cargo	5UZBE1225DD024412
TRL020-1900		Mobile 60x12Office Trailer	DBI01900
TRL022-0298	2013	Econoline Trailer	42ETPFG22D1000298
TRL024-0445	2015	Eager Beaver / Low Boy 50-60 Tn	112SD3532FL080445
TRL-8977	2015	FVCG/Cargo Trailer	5NHUNS629FU108977
TRL-0124	1997	Dorsey Dump Trailer (Aluminum)	1DTD18D24VS080124
TRL025-T201	2005	SSP - Dewatering Trailer	SST05025143EQT201
TRL026-9701	2003	ASPT Dewatering Trailer	NOVIN0200299701
TRL-2622	2017	Anvil Trailer AT7X12TA2 (7x12)	7FYBE122XHD002622
TRL029-9567	2011	Leeboy Trailer	1B9AA1112B1309567
TRL-3742	2017	COTC Trailer	4YMBU1019HG023742
TRL-0068	2018	Witzco Challenger Low Boy Trailer	1W8A11F32JS000068
TRL-1089	2019	Anvil Trailer AT7X12TA2 (7x12)	7FYBE1229KD011089
TRL-3279	2019	Covered TA Gold series white (7x12)	53FBE1224KF053279
TRL-3306	2019	Down to Earth DTE58G29 8' black	5MYUU0811KB063306
TRL-7524	2019	Anderson Trailer 6x14	4YNBN1428KC087524
TRL-3479	2019	Down to Earth DTE58G29 8' black	5MYUU081XKB063479
TRL-9869	2020	Anderson Trailer	4YNBN1213LC089869
TRL-7123	1984	Etnyre LWR/ tr6	1E9T42206GE007123
TRL-0384	2006	DETA	1S9BU101665460384
TRL-6244	2021	PDQ UT6X12TA BLACK 12FT	1P91U1223MD796244
TRL-3451	2022	BIG TEX 16' BUMPER PULL	16V1U1925N3163451
TRL-2740	2022	BIG TEX 16' BUMPER PULL	16VIU2029N3172740
TRL-2272	2024	TRAILSTAR ALUMINUM DUMP	5MADS2431RC082272

TRL-1013	2023	CARRY ON TRAILER/UTILITY LANDSCAPE	4YMBU0816PG011013
TRL-0320	2024	WITZCO RG52 DETACHABLE GOOSENECK	1W8A11E31RS000320
TRL-5094	2024	SURE TRAC UTILITY TRAILER	5JW1U1217R1415094
TRL-6160	2025	MAC ALUMINUM DUMP	5MADS2437SC076160
TRL-4899	2023	NVAE 6X10	5JW1U1015P1404899
TRL-7249	2023	NVAE 7X18	5JW1U1821P2387249
TRL-0616	2025	BIG TEX UTILITY TRAILER	16V1U1722S3380616
TRL-0785	2025	CARRY-ON TRAILER	4YMBU0819SG010785
TRL-7976	2025	NVAE 7X16+4 TILT BED	5JW1U2029S1437976
		MISC. EQUIPMENT	
MIC006-0623	2006	Gomaco GT3600 G21	902900623
MIC007-2899	2016	John Deere Mower Z540M-48A	1GXZ540MEGG012899
MIC008-1099	1989	Caterpillar R80 Rough Terrain Forklift	49A01099
MIC010-9145	2014	Terex-Finlay 684 Screener	TRX00684JDGE89145
MIC011-6670	2017	Buffalo Turbine EFI Cyclone KB5	S/N: 26670
MIC012-1530	2007	Genie Z80 Manlift	Z80071530
MIC013-0167	2014	Caterpillar Asphalt Compactor 44B	NSL00167
MIC015-0269	2002	Caterpillar RM-250C	CATRM250CAWG00269
MIC018	2014	GENIE GS1930 19' ELECTRIC	
MIC019-2762	2016	DOOSAN G30P-5 5500 LB PNEUMATIC TIRE	FGA0C-1790-02762
MIC020-0368	2016	Snorkel A46JRT boom lift 4X4	A46JRT-04-000368
MIC021-7939		TEREX FINLAY 120RS CRUSHER	TRX120RSC0MN37939
		All Pro Concrete Pulverizer Direct Connect	APCP-235
MIC022-0506	2022	TOYOTA 8FGU25 FORKLIFT	10506
MIC023-5389	2018	GENIE SX125XCV	SX125-389
MIC024-9916	2021	BELL B30E ARTICULATING DUMP	B93A631EA03009916

E-Verify

Company ID Number: 1454791

THE E-VERIFY MEMORANDUM OF UNDERSTANDING FOR EMPLOYERS

ARTICLE I
PURPOSE AND AUTHORITY

The parties to this agreement are the Department of Homeland Security (DHS) and Masci General Contractor, Inc. (Employer). The purpose of this agreement is to set forth terms and conditions which the Employer will follow while participating in E-Verify.

E-Verify is a program that electronically confirms an employee's eligibility to work in the United States after completion of Form I-9, Employment Eligibility Verification (Form I-9). This Memorandum of Understanding (MOU) explains certain features of the E-Verify program and describes specific responsibilities of the Employer, the Social Security Administration (SSA), and DHS.

Authority for the E-Verify program is found in Title IV, Subtitle A, of the Illegal Immigration Reform and Immigrant Responsibility Act of 1996 (IIRIRA), Pub. L. 104-208, 110 Stat. 3009, as amended (8 U.S.C. § 1324a note). The Federal Acquisition Regulation (FAR) Subpart 22.18, "Employment Eligibility Verification" and Executive Order 12989, as amended, provide authority for Federal contractors and subcontractors (Federal contractor) to use E-Verify to verify the employment eligibility of certain employees working on Federal contracts.

ARTICLE II
RESPONSIBILITIES

A. RESPONSIBILITIES OF THE EMPLOYER

1. The Employer agrees to display the following notices supplied by DHS in a prominent place that is clearly visible to prospective employees and all employees who are to be verified through the system:

   a. Notice of E-Verify Participation

   b. Notice of Right to Work

2. The Employer agrees to provide to the SSA and DHS the names, titles, addresses, and telephone numbers of the Employer representatives to be contacted about E-Verify. The Employer also agrees to keep such information current by providing updated information to SSA and DHS whenever the representatives' contact information changes.

3. The Employer agrees to grant E-Verify access only to current employees who need E-Verify access. Employers must promptly terminate an employee's E-Verify access if the employer is separated from the company or no longer needs access to E-Verify.

4. The Employer agrees to become familiar with and comply with the most recent version of the E-Verify User Manual.

5. The Employer agrees that any Employer Representative who will create E-Verify cases will complete the E-Verify Tutorial before that individual creates any cases.

a. The Employer agrees that all Employer representatives will take the refresher tutorials when prompted by E-Verify in order to continue using E-Verify. Failure to complete a refresher tutorial will prevent the Employer Representative from continued use of E-Verify.

6. The Employer agrees to comply with current Form I-9 procedures, with two exceptions:

a. If an employee presents a "List B" identity document, the Employer agrees to only accept "List B" documents that contain a photo. (List B documents identified in 8 C.F.R. § 274a.2(b)(1)(B)) can be presented during the Form I-9 process to establish identity.) If an employee objects to the photo requirement for religious reasons, the Employer should contact E-Verify at 888-464-4218.

b. If an employee presents a DHS Form I-551 (Permanent Resident Card), Form I-766 (Employment Authorization Document), or U.S. Passport or Passport Card to complete Form I-9, the Employer agrees to make a photocopy of the document and to retain the photocopy with the employee's Form I-9. The Employer will use the photocopy to verify the photo and to assist DHS with its review of photo mismatches that employees contest. DHS may in the future designate other documents that activate the photo screening tool.

Note: Subject only to the exceptions noted previously in this paragraph, employees still retain the right to present any List A, or List B and List C, document(s) to complete the Form I-9.

7. The Employer agrees to record the case verification number on the employee's Form I-9 or to print the screen containing the case verification number and attach it to the employee's Form I-9.

8. The Employer agrees that, although it participates in E-Verify, the Employer has a responsibility to complete, retain, and make available for inspection Forms I-9 that relate to its employees, or from other requirements of applicable regulations or laws, including the obligation to comply with the antidiscrimination requirements of section 274B of the INA with respect to Form I-9 procedures.

a. The following modified requirements are the only exceptions to an Employer's obligation to not employ unauthorized workers and comply with the anti-discrimination provision of the INA: (1) List B identity documents must have photos, as described in paragraph 6 above; (2) When an Employer confirms the identity and employment eligibility of newly hired employee using E-Verify procedures, the Employer establishes a rebuttable presumption that it has not violated section 274A(a)(1)(A) of the Immigration and Nationality Act (INA) with respect to the hiring of that employee; (3) If the Employer receives a final nonconfirmation for an employee, but continues to employ that person, the Employer must notify DHS and the Employer is subject to a civil money penalty between $550 and $1,100 for each failure to notify DHS of continued employment following a final nonconfirmation; (4) If the Employer continues to employ an employee after receiving a final nonconfirmation, then the Employer is subject to a rebuttable presumption that it has knowingly

employed an unauthorized alien in violation of section 274A(a)(1)(A); and (5) no E-Verify participant is civilly or criminally liable under any law for any action taken in good faith based on information provided through the E-Verify.

b. DHS reserves the right to conduct Form I-9 compliance inspections, as well as any other enforcement or compliance activity authorized by law, including site visits, to ensure proper use of E-Verify.

9. The Employer is strictly prohibited from creating an E-Verify case before the employee has been hired, meaning that a firm offer of employment was extended and accepted and Form I-9 was completed. The Employer agrees to create an E-Verify case for new employees within three Employer business days after each employee has been hired (after both Sections 1 and 2 of Form I-9 have been completed), and to complete as many steps of the E-Verify process as are necessary according to the E-Verify User Manual. If E-Verify is temporarily unavailable, the three-day time period will be extended until it is again operational in order to accommodate the Employer's attempting, in good faith, to make inquiries during the period of unavailability.

10. The Employer agrees not to use E-Verify for pre-employment screening of job applicants, in support of any unlawful employment practice, or for any other use that this MOU or the E-Verify User Manual does not authorize.

11. The Employer must use E-Verify for all new employees. The Employer will not verify selectively and will not verify employees hired before the effective date of this MOU. Employers who are Federal contractors may qualify for exceptions to this requirement as described in Article II.B of this MOU.

12. The Employer agrees to follow appropriate procedures (see Article III below) regarding tentative nonconfirmations. The Employer must promptly notify employees in private of the finding and provide them with the notice and letter containing information specific to the employee's E-Verify case. The Employer agrees to provide both the English and the translated notice and letter for employees with limited English proficiency to employees. The Employer agrees to provide written referral instructions to employees and instruct affected employees to bring the English copy of the letter to the SSA. The Employer must allow employees to contest the finding, and not take adverse action against employees if they choose to contest the finding, while their case is still pending. Further, when employees contest a tentative nonconfirmation based upon a photo mismatch, the Employer must take additional steps (see Article III.B. below) to contact DHS with information necessary to resolve the challenge.

13. The Employer agrees not to take any adverse action against an employee based upon the employee's perceived employment eligibility status while SSA or DHS is processing the verification request unless the Employer obtains knowledge (as defined in 8 C.F.R. § 274a.1(l)) that the employee is not work authorized. The Employer understands that an initial inability of the SSA or DHS automated verification system to verify work authorization, a tentative nonconfirmation, a case in continuance (indicating the need for additional time for the government to resolve a case), or the finding of a photo mismatch, does not establish, and should not be interpreted as, evidence that the employee is not work authorized. In any of such cases, the employee must be provided a full and fair opportunity to contest the finding, and if he or she does so, the employee may not be terminated or suffer any adverse employment consequences based upon the employee's perceived employment eligibility status

(including denying, reducing, or extending work hours, delaying or preventing training, requiring an employee to work in poorer conditions, withholding pay, refusing to assign the employee to a Federal contract or other assignment, or otherwise assuming that he or she is unauthorized to work) until and unless secondary verification by SSA or DHS has been completed and a final nonconfirmation has been issued. If the employee does not choose to contest a tentative nonconfirmation or a photo mismatch or if a secondary verification is completed and a final nonconfirmation is issued, then the Employer can find the employee is not work authorized and terminate the employee's employment. Employers or employees with questions about a final nonconfirmation may call E-Verify at 1-888-464-4218 (customer service) or 1-888-897-7781 (worker hotline).

14. The Employer agrees to comply with Title VII of the Civil Rights Act of 1964 and section 274B of the INA as applicable by not discriminating unlawfully against any individual in hiring, firing, employment eligibility verification, or recruitment or referral practices because of his or her national origin or citizenship status, or by committing discriminatory documentary practices. The Employer understands that such illegal practices can include selective verification or use of E-Verify except as provided in part D below, or discharging or refusing to hire employees because they appear or sound "foreign" or have received tentative nonconfirmations. The Employer further understands that any violation of the immigration-related unfair employment practices provisions in section 274B of the INA could subject the Employer to civil penalties, back pay awards, and other sanctions, and violations of Title VII could subject the Employer to back pay awards, compensatory and punitive damages. Violations of either section 274B of the INA or Title VII may also lead to the termination of its participation in E-Verify. If the Employer has any questions relating to the anti-discrimination provision, it should contact OSC at 1-800-255-8155 or 1-800-237-2515 (TDD).

15. The Employer agrees that it will use the information it receives from E-Verify only to confirm the employment eligibility of employees as authorized by this MOU. The Employer agrees that it will safeguard this information, and means of access to it (such as PINS and passwords), to ensure that it is not used for any other purpose and as necessary to protect its confidentiality, including ensuring that it is not disseminated to any person other than employees of the Employer who are authorized to perform the Employer's responsibilities under this MOU, except for such dissemination as may be authorized in advance by SSA or DHS for legitimate purposes.

16. The Employer agrees to notify DHS immediately in the event of a breach of personal information. Breaches are defined as loss of control or unauthorized access to E-Verify personal data. All suspected or confirmed breaches should be reported by calling 1-888-464-4218 or via email at E-Verify@dhs.gov. Please use "Privacy Incident – Password" in the subject line of your email when sending a breach report to E-Verify.

17. The Employer acknowledges that the information it receives from SSA is governed by the Privacy Act (5 U.S.C. § 552a(i)(1) and (3)) and the Social Security Act (42 U.S.C. 1306(a)). Any person who obtains this information under false pretenses or uses it for any purpose other than as provided for in this MOU may be subject to criminal penalties.

18. The Employer agrees to cooperate with DHS and SSA in their compliance monitoring and evaluation of E-Verify, which includes permitting DHS, SSA, their contractors and other agents, upon

reasonable notice, to review Forms I-9 and other employment records and to interview it and its employees regarding the Employer's use of E-Verify, and to respond in a prompt and accurate manner to DHS requests for information relating to their participation in E-Verify.

19. The Employer shall not make any false or unauthorized claims or references about its participation in E-Verify on its website, in advertising materials, or other media. The Employer shall not describe its services as federally-approved, federally-certified, or federally-recognized, or use language with a similar intent on its website or other materials provided to the public. Entering into this MOU does not mean that E-Verify endorses or authorizes your E-Verify services and any claim to that effect is false.

20. The Employer shall not state in its website or other public documents that any language used therein has been provided or approved by DHS, USCIS or the Verification Division, without first obtaining the prior written consent of DHS.

21. The Employer agrees that E-Verify trademarks and logos may be used only under license by DHS/USCIS (see M-795 (Web)) and, other than pursuant to the specific terms of such license, may not be used in any manner that might imply that the Employer's services, products, websites, or publications are sponsored by, endorsed by, licensed by, or affiliated with DHS, USCIS, or E-Verify.

22. The Employer understands that if it uses E-Verify procedures for any purpose other than as authorized by this MOU, the Employer may be subject to appropriate legal action and termination of its participation in E-Verify according to this MOU.

B. RESPONSIBILITIES OF FEDERAL CONTRACTORS

1. If the Employer is a Federal contractor with the FAR E-Verify clause subject to the employment verification terms in Subpart 22.18 of the FAR, it will become familiar with and comply with the most current version of the E-Verify User Manual for Federal Contractors as well as the E-Verify Supplemental Guide for Federal Contractors.

2. In addition to the responsibilities of every employer outlined in this MOU, the Employer understands that if it is a Federal contractor subject to the employment verification terms in Subpart 22.18 of the FAR it must verify the employment eligibility of any "employee assigned to the contract" (as defined in FAR 22.1801). Once an employee has been verified through E-Verify by the Employer, the Employer may not create a second case for the employee through E-Verify.

a. An Employer that is not enrolled in E-Verify as a Federal contractor at the time of a contract award must enroll as a Federal contractor in the E-Verify program within 30 calendar days of contract award and, within 90 days of enrollment, begin to verify employment eligibility of new hires using E-Verify. The Employer must verify those employees who are working in the United States, whether or not they are assigned to the contract. Once the Employer begins verifying new hires, such verification of new hires must be initiated within three business days after the hire date. Once enrolled in E-Verify as a Federal contractor, the Employer must begin verification of employees assigned to the contract within 90 calendar days after the date of enrollment or within 30 days of an employee's assignment to the contract, whichever date is later.

b. Employers enrolled in E-Verify as a Federal contractor for 90 days or more at the time of a contract award must use E-Verify to begin verification of employment eligibility for new hires of the Employer who are working in the United States, whether or not assigned to the contract, within three business days after the date of hire. If the Employer is enrolled in E-Verify as a Federal contractor for 90 calendar days or less at the time of contract award, the Employer must, within 90 days of enrollment, begin to use E-Verify to initiate verification of new hires of the contractor who are working in the United States, whether or not assigned to the contract. Such verification of new hires must be initiated within three business days after the date of hire. An Employer enrolled as a Federal contractor in E-Verify must begin verification of each employee assigned to the contract within 90 calendar days after date of contract award or within 30 days after assignment to the contract, whichever is later.

c. Federal contractors that are institutions of higher education (as defined at 20 U.S.C. 1001(a)), state or local governments, governments of Federally recognized Indian tribes, or sureties performing under a takeover agreement entered into with a Federal agency under a performance bond may choose to only verify new and existing employees assigned to the Federal contract. Such Federal contractors may, however, elect to verify all new hires, and/or all existing employees hired after November 6, 1986. Employers in this category must begin verification of employees assigned to the contract within 90 calendar days after the date of enrollment or within 30 days of an employee's assignment to the contract, whichever date is later.

d. Upon enrollment, Employers who are Federal contractors may elect to verify employment eligibility of all existing employees working in the United States who were hired after November 6, 1986, instead of verifying only those employees assigned to a covered Federal contract. After enrollment, Employers must elect to verify existing staff following DHS procedures and begin E-Verify verification of all existing employees within 180 days after the election.

e. The Employer may use a previously completed Form I-9 as the basis for creating an E-Verify case for an employee assigned to a contract as long as:

i. That Form I-9 is complete (including the SSN) and complies with Article II.A.6,

ii. The employee's work authorization has not expired, and

iii. The Employer has reviewed the Form I-9 information either in person or in communications with the employee to ensure that the employee's Section 1, Form I-9 attestation has not changed (including, but not limited to, a lawful permanent resident alien having become a naturalized U.S. citizen).

f. The Employer shall complete a new Form I-9 consistent with Article II.A.6 or update the previous Form I-9 to provide the necessary information if:

i. The Employer cannot determine that Form I-9 complies with Article II.A.6,

ii. The employee's basis for work authorization as attested in Section 1 has expired or changed, or

iii. The Form I-9 contains no SSN or is otherwise incomplete.

Note: If Section 1 of Form I-9 is otherwise valid and up-to-date and the form otherwise complies with

Article II.C.5, but reflects documentation (such as a U.S. passport or Form I-551) that expired after completing Form I-9, the Employer shall not require the production of additional documentation, or use the photo screening tool described in Article II.A.5, subject to any additional or superseding instructions that may be provided on this subject in the E-Verify User Manual.

g. The Employer agrees not to require a second verification using E-Verify of any assigned employee who has previously been verified as a newly hired employee under this MOU or to authorize verification of any existing employee by any Employer that is not a Federal contractor based on this Article.

3. The Employer understands that if it is a Federal contractor, its compliance with this MOU is a performance requirement under the terms of the Federal contract or subcontract, and the Employer consents to the release of information relating to compliance with its verification responsibilities under this MOU to contracting officers or other officials authorized to review the Employer's compliance with Federal contracting requirements.

C. RESPONSIBILITIES OF SSA

1. SSA agrees to allow DHS to compare data provided by the Employer against SSA's database. SSA sends DHS confirmation that the data sent either matches or does not match the information in SSA's database.

2. SSA agrees to safeguard the information the Employer provides through E-Verify procedures. SSA also agrees to limit access to such information, as is appropriate by law, to individuals responsible for the verification of Social Security numbers or responsible for evaluation of E-Verify or such other persons or entities who may be authorized by SSA as governed by the Privacy Act (5 U.S.C. § 552a), the Social Security Act (42 U.S.C. 1306(a)), and SSA regulations (20 CFR Part 401).

3. SSA agrees to provide case results from its database within three Federal Government work days of the initial inquiry. E-Verify provides the information to the Employer.

4. SSA agrees to update SSA records as necessary if the employee who contests the SSA tentative nonconfirmation visits an SSA field office and provides the required evidence. If the employee visits an SSA field office within the eight Federal Government work days from the date of referral to SSA, SSA agrees to update SSA records, if appropriate, within the eight-day period unless SSA determines that more than eight days may be necessary. In such cases, SSA will provide additional instructions to the employee. If the employee does not visit SSA in the time allowed, E-Verify may provide a final nonconfirmation to the employer.

Note: If an Employer experiences technical problems, or has a policy question, the employer should contact E-Verify at 1-888-464-4218.

D. RESPONSIBILITIES OF DHS

1. DHS agrees to provide the Employer with selected data from DHS databases to enable the Employer to conduct, to the extent authorized by this MOU:

a. Automated verification checks on alien employees by electronic means, and

b. Photo verification checks (when available) on employees.

2. DHS agrees to assist the Employer with operational problems associated with the Employer's participation in E-Verify. DHS agrees to provide the Employer names, titles, addresses, and telephone numbers of DHS representatives to be contacted during the E-Verify process.

3. DHS agrees to provide to the Employer with access to E-Verify training materials as well as an E-Verify User Manual that contain instructions on E-Verify policies, procedures, and requirements for both SSA and DHS, including restrictions on the use of E-Verify.

4. DHS agrees to train Employers on all important changes made to E-Verify through the use of mandatory refresher tutorials and updates to the E-Verify User Manual. Even without changes to E-Verify, DHS reserves the right to require employers to take mandatory refresher tutorials.

5. DHS agrees to provide to the Employer a notice, which indicates the Employer's participation in E-Verify. DHS also agrees to provide to the Employer anti-discrimination notices issued by the Office of Special Counsel for Immigration-Related Unfair Employment Practices (OSC), Civil Rights Division, U.S. Department of Justice.

6. DHS agrees to issue each of the Employer's E-Verify users a unique user identification number and password that permits them to log in to E-Verify.

7. DHS agrees to safeguard the information the Employer provides, and to limit access to such information to individuals responsible for the verification process, for evaluation of E-Verify, or to such other persons or entities as may be authorized by applicable law. Information will be used only to verify the accuracy of Social Security numbers and employment eligibility, to enforce the INA and Federal criminal laws, and to administer Federal contracting requirements.

8. DHS agrees to provide a means of automated verification that provides (in conjunction with SSA verification procedures) confirmation or tentative nonconfirmation of employees' employment eligibility within three Federal Government work days of the initial inquiry.

9. DHS agrees to provide a means of secondary verification (including updating DHS records) for employees who contest DHS tentative nonconfirmations and photo mismatch tentative nonconfirmations. This provides final confirmation or nonconfirmation of the employees' employment eligibility within 10 Federal Government work days of the date of referral to DHS, unless DHS determines that more than 10 days may be necessary. In such cases, DHS will provide additional verification instructions.

ARTICLE III
REFERRAL OF INDIVIDUALS TO SSA AND DHS

A. REFERRAL TO SSA

1. If the Employer receives a tentative nonconfirmation issued by SSA, the Employer must print the notice as directed by E-Verify. The Employer must promptly notify employees in private of the finding and provide them with the notice and letter containing information specific to the employee's E-Verify

case. The Employer also agrees to provide both the English and the translated notice and letter for employees with limited English proficiency to employees. The Employer agrees to provide written referral instructions to employees and instruct affected employees to bring the English copy of the letter to the SSA. The Employer must allow employees to contest the finding, and not take adverse action against employees if they choose to contest the finding, while their case is still pending.

2. The Employer agrees to obtain the employee's response about whether he or she will contest the tentative nonconfirmation as soon as possible after the Employer receives the tentative nonconfirmation. Only the employee may determine whether he or she will contest the tentative nonconfirmation.

3. After a tentative nonconfirmation, the Employer will refer employees to SSA field offices only as directed by E-Verify. The Employer must record the case verification number, review the employee information submitted to E-Verify to identify any errors, and find out whether the employee contests the tentative nonconfirmation. The Employer will transmit the Social Security number, or any other corrected employee information that SSA requests, to SSA for verification again if this review indicates a need to do so.

4. The Employer will instruct the employee to visit an SSA office within eight Federal Government work days. SSA will electronically transmit the result of the referral to the Employer within 10 Federal Government work days of the referral unless it determines that more than 10 days is necessary.

5. While waiting for case results, the Employer agrees to check the E-Verify system regularly for case updates.

6. The Employer agrees not to ask the employee to obtain a printout from the Social Security Administration number database (the Numident) or other written verification of the SSN from the SSA.

B. REFERRAL TO DHS

1. If the Employer receives a tentative nonconfirmation issued by DHS, the Employer must promptly notify employees in private of the finding and provide them with the notice and letter containing information specific to the employee's E-Verify case. The Employer also agrees to provide both the English and the translated notice and letter for employees with limited English proficiency to employees. The Employer must allow employees to contest the finding, and not take adverse action against employees if they choose to contest the finding, while their case is still pending.

2. The Employer agrees to obtain the employee's response about whether he or she will contest the tentative nonconfirmation as soon as possible after the Employer receives the tentative nonconfirmation. Only the employee may determine whether he or she will contest the tentative nonconfirmation.

3. The Employer agrees to refer individuals to DHS only when the employee chooses to contest a tentative nonconfirmation.

4. If the employee contests a tentative nonconfirmation issued by DHS, the Employer will instruct the

employee to contact DHS through its toll-free hotline (as found on the referral letter) within eight Federal Government work days.

5. If the Employer finds a photo mismatch, the Employer must provide the photo mismatch tentative nonconfirmation notice and follow the instructions outlined in paragraph 1 of this section for tentative nonconfirmations, generally.

6. The Employer agrees that if an employee contests a tentative nonconfirmation based upon a photo mismatch, the Employer will send a copy of the employee's Form I-551, Form I-766, U.S. Passport, or passport card to DHS for review by:

a. Scanning and uploading the document, or

b. Sending a photocopy of the document by express mail (furnished and paid for by the employer).

7. The Employer understands that if it cannot determine whether there is a photo match/mismatch, the Employer must forward the employee's documentation to DHS as described in the preceding paragraph. The Employer agrees to resolve the case as specified by the DHS representative who will determine the photo match or mismatch.

8. DHS will electronically transmit the result of the referral to the Employer within 10 Federal Government work days of the referral unless it determines that more than 10 days is necessary.

9. While waiting for case results, the Employer agrees to check the E-Verify system regularly for case updates.

ARTICLE IV
SERVICE PROVISIONS

A. NO SERVICE FEES

1. SSA and DHS will not charge the Employer for verification services performed under this MOU. The Employer is responsible for providing equipment needed to make inquiries. To access E-Verify, an Employer will need a personal computer with Internet access.

ARTICLE V
MODIFICATION AND TERMINATION

A. MODIFICATION

1. This MOU is effective upon the signature of all parties and shall continue in effect for as long as the SSA and DHS operates the E-Verify program unless modified in writing by the mutual consent of all parties.

2. Any and all E-Verify system enhancements by DHS or SSA, including but not limited to E-Verify checking against additional data sources and instituting new verification policies or procedures, will be covered under this MOU and will not cause the need for a supplemental MOU that outlines these changes.

B. TERMINATION

1. The Employer may terminate this MOU and its participation in E-Verify at any time upon 30 days prior written notice to the other parties.

2. Notwithstanding Article V, part A of this MOU, DHS may terminate this MOU, and thereby the Employer's participation in E-Verify, with or without notice at any time if deemed necessary because of the requirements of law or policy, or upon a determination by SSA or DHS that there has been a breach of system integrity or security by the Employer, or a failure on the part of the Employer to comply with established E-Verify procedures and/or legal requirements. The Employer understands that if it is a Federal contractor, termination of this MOU by any party for any reason may negatively affect the performance of its contractual responsibilities. Similarly, the Employer understands that if it is in a state where E-Verify is mandatory, termination of this by any party MOU may negatively affect the Employer's business.

3. An Employer that is a Federal contractor may terminate this MOU when the Federal contract that requires its participation in E-Verify is terminated or completed. In such cases, the Federal contractor must provide written notice to DHS. If an Employer that is a Federal contractor fails to provide such notice, then that Employer will remain an E-Verify participant, will remain bound by the terms of this MOU that apply to non-Federal contractor participants, and will be required to use the E-Verify procedures to verify the employment eligibility of all newly hired employees.

4. The Employer agrees that E-Verify is not liable for any losses, financial or otherwise, if the Employer is terminated from E-Verify.

ARTICLE VI
PARTIES

A. Some or all SSA and DHS responsibilities under this MOU may be performed by contractor(s), and SSA and DHS may adjust verification responsibilities between each other as necessary. By separate agreement with DHS, SSA has agreed to perform its responsibilities as described in this MOU.

B. Nothing in this MOU is intended, or should be construed, to create any right or benefit, substantive or procedural, enforceable at law by any third party against the United States, its agencies, officers, or employees, or against the Employer, its agents, officers, or employees.

C. The Employer may not assign, directly or indirectly, whether by operation of law, change of control or merger, all or any part of its rights or obligations under this MOU without the prior written consent of DHS, which consent shall not be unreasonably withheld or delayed. Any attempt to sublicense, assign, or transfer any of the rights, duties, or obligations herein is void.

D. Each party shall be solely responsible for defending any claim or action against it arising out of or related to E-Verify or this MOU, whether civil or criminal, and for any liability wherefrom, including (but not limited to) any dispute between the Employer and any other person or entity regarding the applicability of Section 403(d) of IIRIRA to any action taken or allegedly taken by the Employer.

E. The Employer understands that its participation in E-Verify is not confidential information and may be disclosed as authorized or required by law and DHS or SSA policy, including but not limited to,

Congressional oversight, E-Verify publicity and media inquiries, determinations of compliance with Federal contractual requirements, and responses to inquiries under the Freedom of Information Act (FOIA).

F. The individuals whose signatures appear below represent that they are authorized to enter into this MOU on behalf of the Employer and DHS respectively. The Employer understands that any inaccurate statement, representation, data or other information provided to DHS may subject the Employer, its subcontractors, its employees, or its representatives to: (1) prosecution for false statements pursuant to 18 U.S.C. 1001 and/or; (2) immediate termination of its MOU and/or; (3) possible debarment or suspension.

G. The foregoing constitutes the full agreement on this subject between DHS and the Employer.

To be accepted as an E-Verify participant, you should only sign the Employer's Section of the signature page. If you have any questions, contact E-Verify at 1-888-464-4218.

E-Verify

Company ID Number: 1454791

Approved by:

Employer Masci General Contractor, Inc.	
Name (Please Type or Print) Leticia M Ferreira	Title
Signature Electronically Signed	Date 09/30/2019
Department of Homeland Security – Verification Division	
Name (Please Type or Print) USCIS Verification Division	Title
Signature Electronically Signed	Date 09/30/2019

E-Verify

Company ID Number: 1454791

Information Required for the E-Verify Program **Information relating to your Company:**	
Company Name	Masci General Contractor, Inc.
Company Facility Address	5752 South Ridgewood Ave Port Orange, FL 32127
Company Alternate Address	
County or Parish	VOLUSIA
Employer Identification Number	202045800
North American Industry Classification Systems Code	237
Parent Company	
Number of Employees	100 to 499
Number of Sites Verified for	1 site(s)

E-Verify

Company ID Number: 1454791

Are you verifying for more than 1 site? If yes, please provide the number of sites verified for in each State:

FL	1

Company ID Number: 1454791

Information relating to the Program Administrator(s) for your Company on policy questions or operational problems:

Name	Leticia M Ferreira
Phone Number	3863224500
Fax	3863224600
Email	leticiamasci@masciqc.com

STATUS OF CONTRACTS ON HAND

Give full information about all of your contracts, whether prime or subcontracts; whether in progress or awarded but not yet begun; and regardless of its location and with whom contracted.

1	2	3	4	5	6	7
CLASSES OF WORK	**DOT PROJECTS AND LOCATION OF WORK YOU ARE PERFORMING**	**CONTRACT (OR SUBCONTRACT) AMOUNT**	**AMOUNT SUBLET TO OTHERS**	**BALANCE OF CONTRACT AMOUNT**	**UNCOMPLETED AMOUNT TO BE DONE BY APPLICANT**	
					AS PRIME CONTRACTOR	**AS SUBCONTRACTOR**
	T5736, SR 426, Oviedo, Seminole Co	$19,997,789.33	$5,115,784.29	$14,882,005.04	$50,000.00	
	T5791, US 192, Brevard Co	$5,374,095.14	$1,264,086.53	$4,110,008.61	$150,000.00	
	E57B7, SR 501, Brevard Co	$13,078,909.55	$2,661,014.82	$10,417,894.73	$300,000.00	
	T5809, SR 11, Flagler Co	$19,059,006.92	$2,345,254.00	$16,713,752.92	$900,000.00	
	T5824, SR 46, Seminole Co	$16,711,370.19	$5,133,545.00	$11,577,825.19	$500,000.00	
	E57B2, SR 46, Seminole Co	$5,768,392.74	$1,000,000.00	$4,768,392.74	$807,500.00	
	T5841, SR 401, Brevard Co	$5,577,919.09	$1,600,000.00	$3,977,919.09	$3,500,000.00	
	T5838, US 441, Orange Co	$7,714,913.47	$1,083,500.00	$6,631,413.47	$6,631,413.47	
	E8V62, SR 417 Resurf, Seminole Co	$17,398,818.51	$0.00	$17,398,818.51	$17,398,818.51	
	E53F1, SR 404, Brevard Co	$10,698,155.67	$0.00	$10,698,155.67	$10,698,155.67	
	T5842, SR 600, Volusia Co (Sub to Carr)	$668,781.34	$0.00	$668,781.34	$668,781.34	
			DOT WORK	$101,844,967.31		
				(Col. 5 Subtotal)	$41,604,668.99	
CLASSES OF WORK	**OTHER (Non-DOT) PROJECTS, OWNER, AND LOCATION OF WORK YOU ARE PERFORMING**	CONTRACT (OR SUBCONTRACT) AMOUNT	AMOUNT SUBLET TO OTHERS	BALANCE OF CONTRACT AMOUNT		
	Volusia County - Turnbull Bay	$3,510,615.07	$490,049.63	$3,020,565.44	$11,650.00	
	City of New Smyrna Beach - Airport Taxiway Improv	$4,847,128.64	$1,744,948.75	$3,102,179.89	$2,100,000.00	
	Seminole County - Oxford Road Improv	$40,065,087.29	$9,571,091.31	$30,493,995.98	$23,000,000.00	
	Volusia County - Countywide Resurfacing	$5,580,301.02	$200,000.00	$5,380,301.02	$1,550,000.00	
	City of Casselberry - Road Rehab	$2,998,077.02	$200,000.00	$2,798,077.02	$2,200,000.00	
	City of New Smyrna Beach - N. Atlantic Ave Drainage	$1,570,607.59	$0.00	$1,570,607.59	$1,570,607.00	
	City of New Smyrna Beach Utilities - N. Atlantic Ave	$1,385,488.15	$0.00	$1,385,488.15	$1,385,488.00	
			OTHER WORK	$47,751,215.09		
				(Col. 5 Subtotal)	$31,817,745.00	
PLEASE ENTER ATTACHMENT TOTALS ON THIS LINE						
				TOTAL UNCOMPLETED WORK ON HAND TO BE DONE BY YOU	$73,422,413.99	
				GRAND TOTAL		

NOTE: Columns 3 and 4 to show total contract (or subcontract) amounts. Column 5 to be difference between columns 3 and 4. Amount in columns 6 or 7 to be uncompleted portion of amount in column 5. All amounts to be shown to nearest $100.00. The Contractor may consolidate and list as a single item all contracts which individually do not exceed 3% of the total, and which, in the aggregate, amount to less than 20% of the total.

Total of Columns 6 and 7 Must Be Filled In and Must Agree with Related Attachment(s), if furnished.

MASCI
General Contractor

Richard Sanchez
Superintendent

Education and Certifications

- Advanced Maintenance of Traffic Certified
- OSHA Certified

Richard "Richie" Sanchez has over 40 years of experience in project supervising. He is skilled in all aspects of roadway construction. Richie has managed numerous projects and his experience ranges from large government capital improvement projects to private development projects. He continuously demonstrates the drive and skill to complete projects both on time and within budget.

EXPERIENCE

2015 – Present	Superintendent	Masci General Contractor, Inc.	Port Orange, FL

Recent Projects Completed:

$	8,940,784	Central Beach Phase III Flood Mitigation Improvements	City of New Smyrna Beach
$	1,019,727	Roosevelt Avenue	Satellite Beach
$	11,252,308	Howland Boulevard Widening	Deltona
$	2,178,372	Ft. Smith Boulevard, Section 4B	Deltona
$	213,475	Herbert St. @ Clyde Morris	Port Orange

MASCI
General Contractor

Luis Beitia
Pipe Superintendent

Education and Certifications

- Advanced Maintenance of Traffic Certified
- OSHA Certified

Luis Beitia has over 45 years of experience in project supervising. He is skilled in all aspects of underground utilities including, water, sewer, force main, reclaimed water and drainage structures installation. Luis has managed numerous projects and his experience ranges from large government capital improvement projects to private development projects. He continuously demonstrates the drive and skill of completing projects both on time and within budget.

EXPERIENCE

2008 – Present Superintendent Masci General Contractor, Inc. Port Orange, FL

Recent Projects Completed:

$	8,940,784	Central Beach Phase III Flood Mitigation Improvements	City of New Smyrna Beach
$	2,901,022	Atlantic Ave Sidewalk	Ponce Inlet
$	1,124,704	FDOT #E5W88, SR 426 (Aloma Ave), Orange County	Winter Park
$	1,019,727	Roosevelt Avenue	Satellite Beach
$	860,550	FDOT #T5541, SR 406 (Garden St), Brevard County	Titusville
$	1,837,115	FDOT #T5545, SR 40, Marion County	Ocala
$	501,311	Turnbull Bay Bridge Utilities	New Smyrna Beach
$	11,252,308	Howland Boulevard Widening	Deltona
$	2,178,372	Ft Smith Boulevard, Section 4B	Deltona

Leonard Witkowski
Project Manager

2012 to Present Masci Corporation
Project Manager

417 Widening Project Curry Ford Road to Lake Underhill 3/2014 to Present Project Manager
Drainage improvements and widening of 4 bridges with adding lanes.
CEI: Jon Gibson

Wickham Road Melbourne Fl. 5/2012 to 12/2013 Project Superintendent
Widen road with drainage, sidewalk, curbs and signalization
For Brevard County with Bruce Auchter

2005 to 2010 APAC Southeast Inc.
Project Manager

Jobs Worked On

FDOT SR 507 & SR 5 5/2009 to 11/2009 Project Manager
Mill and Resurface with reconstruction of handicap ramps.
For Florida Department of Transportation with Kim Navarro Project Administrator

FDOT SR 518 & SR 5 1/2009 to 6/2009 Project Manager
Mill and Resurface with handicap ramps, drainage improvements and signalization.
For Florida Department of Transportation with Robert Martens Project Administrator

Micco Road Sidewalk & Intersection Improvement 6/2007 to 1/2009 Project Superintendent
Reconstructed 2 miles of road with new turn lanes, drainage improvements, curb and 2 miles of sidewalk with Jesse Forst P.E. with RS&H
For Brevard County with Bruce Auchter and Matt Currier lead inspector.

Viera Overpass over I 95 8/2006 to 1/2008 Project Superintendent
Built bridge over I 95 with 2 miles of 4 lane road including drainage, sidewalk, curbs and new signalization.
Contracted with The Viera Company with Mary Ellen McKibben, Project Director.
Constructed with Parsons Engineering Bryan Rerko P.E. Senior Project Engineer.

Edward White Patrick Air Force Base 4/2006 to 8/2006 Project Superintendent
Reconstructed road with drainage improvement and sidewalk.
Working under Sherri Richardson with lead inspector Paul Johnson.

Patrick Air Force Base Medical Clinic 11/2005 to 8/2006 Project Superintendent
Reconstruct parking lot with new curb, sidewalk and pavement for PAFB under the IDIQ contract.
Working under Sherri Richardson Contracting Officer for 45 CONS/LGCA

Experience

Operating Heavy Equipment, All Types
Scheduling Subcontractors and Employees
Customer Relations with Engineers, Department of Transportation, County, City and Federal Employees.
Checking Jobs to meet Standard Specification.
Job Related Accounting

Education

1975 to 1979 Lancaster Central High School / Majors: Math, History and Mechanical Drawing
1979 to 1982 Erie Community College / Major: Business Management and Accounting

Certifications

ATSSA Traffic Control Supervisor
Competent Person
Storm water Certified Inspector
CTQP Asphalt Paving Level I and II

MASCI
General Contractor

Leonel A. Masci, P.E.
President / C.E.O.

Education and Certifications

- Bachelor of Science in Civil Engineering University of Massachusetts at Lowell (1994)
- State of Florida General Contractor
- Professional Engineer, Lic. No.: 68418
- State of Florida Underground Utility Contractor
- Certified by Boston Water & Sewer Commission
- Hydraulics License
- Florida Engineering Society
- OSHA Certified

Leonel A. Masci, P.E. has over 30 years of experience in the construction industry as a project manager and as a general contractor on numerous government and private construction projects. His experience in the construction industry is founded through both his invested time in construction as well as formal his formal education and licensure as a Professional Engineer. Mr. Masci embodies the Design/Build future of the construction industry and brings this talent to the client's projects he represents.

RELEVANT EXPERIENCE

Design/Build Contractor, Rymfire Drive Multi-Use Path, Palm Coast, FL: Design of a 2,400-ft long multi use path which includes a 120-ft pedestrian bridge system to cross a drainage canal. This project is a joint venture between the City of Palm Coast and FDOT-5. Responsibilities include design, permitting, project management, and construction.

Project Manager, Williamson Blvd. Widening, Volusia County, FL: General Contractor for the widening of Williamson Blvd from two lanes to four. Project include the installation of 5,400-ft of concrete sidewalk with ADA curb ramps and signage and marking.

Project Manager, Exercise Trail, St. Johns County School Board, FL: Responsible for the construction of a three,¼-mile track systems at various school sites. Project involves the coordination of construction to be conducted when no classes are being held and a precise timeline for completion prior to the start of the school year.

Project Manager, Lehigh Rail Trail, Flagler County, FL: Installation of 4.5 miles of trails for walking and bicycling. This project included the construction of 10-ft wide concrete path including a 1,000-ft elevated boardwalk over wetlands.

Project Manager, Spring to Spring, Volusia County, FL: Construction of 2.5 miles of concrete multi-use trail. This project required significant routing of the concrete trail to minimize impact to numerous significant and historic trees along the route.

Project Manager, Spruce Creek Road Utility and Sidewalk Improvements, City of Port Orange, FL: General Contractor for the installation of a force main system, sanitary sewer utilities and drainage structures. In addition, this project included the construction of 7,900-ft of 8' concrete sidewalk.

Project Manager, Saxon Dr Sidewalk A1A to Schoolway Ave., Volusia County, FL: Responsible for the construction of 5,000-ft of concrete sidewalk.

MASCI
General Contractor

David Jewett
Project Manager

Education and Certifications

- Civil Engineering – Pennsylvania College of Technology, 2016
- Maintenance of Traffic Advanced Certified
- Asphalt Mix Design Certified
- Asphalt Paving Level 1 & 2 Certified
- Asphalt Plant Level 1 & 2 Certified
- Quality Control Management Certified

David Jewett has nine years experience in project management. He is skilled in all aspects of asphalt manufacturing and paving. David has managed numerous projects and his experience ranges from asphalt paving to water/wastewater projects in municipal, federal, and private sectors. He continuously demonstrates the drive and skill of completing projects both on time and within budget.

EXPERIENCE

2016 – Present - Masci General Contractor, Inc. – Project Manager

T5636, I-95 Resurfacing, Florida Department of Transportation
Project consisted of milling 1,398,772 square yards at varied depths, laying 213,318 tons of asphalt from N of Palm Coast Pkwy to Flagler/St. Johns County line in Flagler County, permanent pavement markings, signs and signalization improvements.

T5681, I-4 Resurfacing Westbound 17/92 to Lake Mary Blvd, Florida Department of Transportation
Project consisted of milling 224,886 square yards at varied depths, laying 33,993 tons of asphalt 33,993 tons of asphalt from W of Lake Mary Blvd. to the Seminole/Volusia County line, permanent pavement markings, signs and signalization improvements.

2020 Resurfacing, City of Palm Coast
Project consisted of milling 195,231 square yards, laying 18,336 tons of asphalt on residential roads throughout Palm Coast, permanent pavement markings, reflective pavement markers, 50 manhole adjustments and 37 water valve adjustments.

David E. Hinson

Foreman – Concrete Crew

David E. Hinson has over 20 years of experience in the Construction industry as a supervisor on numerous government and private construction projects. He has been responsible for managing concrete construction crews in concrete structure work such as bridges, conspan bridges, bridge decks, concrete chlorine chamber, DOT Cast in Place Box Culvert and retaining walls. David is also proficient in concrete flatwork such as curb, sidewalk, traffic separators and concrete repair work.

RELEVANT EXPERIENCE

2011 – Present Concrete Foreman Masci General Contractor, Inc. Port Orange, FL

Projects Completed:

- Eustis, FL – Retaining Wall
- Palatka, FL – Constructed New Chlorine Chamber for Water Treatment Plant
- Lake Mary, FL – Retaining Wall
- Palm Bay, FL – Poured in Place Box Culvert
- Cocoa Beach, FL- Poured in Place Box Culvert
- Ormond Beach, FL – Wing Walls/ Head Walls/ Cast in Place Box Culvert
- Port Orange, FL – Poured in Place Retaining Wall for Water Treatment Plant

2006-2010 – Concrete Foreman Westwind Contracting Pembroke Park, FL

2003-2006 – Concrete Crew Leader Yelvington Construction Pierson, FL

MASCI
General Contractor

Chris Wright
Project Manager

Education and Certifications

- Bachelor of Science – Ball State University, Indiana 2003
- Maintenance of Traffic Certified
- OSHA Certified

Chris Wright has 17 years experience in project management. He is skilled in all aspects of sales, underground utilities including, water, sewer, force main, reclaimed water and drainage structures installation. Chris has supervised numerous projects and his experience ranges from large government capital improvement programs to private development projects. He continuously demonstrates the drive and skill of completing projects both on time and within budget.

EXPERIENCE

2010 – Present - Masci General Contractor, Inc. – Project Manager

Isleboro Subdivision Stormwater Improvements Project (New Smyrna Beach)
Project consisted of 25,000 LF of new storm water pipe improvements, 17,000 LF of potable water, 2,000 LF of sanitary improvements and 3,000 LF of wastewater expansion upgrades. Additional improvements on this project included construction/excavation of 2 ponds, milling and overlaying of 16,000 SY of roadway, 22,000 SY of new roadway on existing shell roads, 35,000 LF of new curbing and 7,100 SY of removal & replacement of new driveways.

Reclaimed Water Main Extension - Phases I, II & III (City of Edgewater)
Project consisted of 10,700 LF of PVC reclaimed water main, 9,000 LF of HDPE directionally drilled reclaimed water main, 16" water main, curb and gutters, sidewalks, asphalt removal/replacement and construction/excavation of a large retention pond.

T5660 - A1A (Satellite Beach to Indialantic - FDOT)
Project consisted of drainage improvements including 1,200 LF of new drainage pipe, 80 new manholes, ditch bottom and curb inlets. Intersection upgrades that included 18 new signal mast arms, 75 new pedestrian signals, pull boxes, conduits, etc. Asphalt improvements included milling and paving this 9 mile stretch of 5 lane highway - 341,200 SY of milling and 38,200 TN of new asphalt.

CITY COUNCIL AGENDA ITEM

COUNCIL MEETING DATE 8/19/2025

SUBJECT: (B6c) Approval of Change Order No. 1 to Task Authorization No. 4 with Zev Cohen and Associates, Inc for the City Center Ballfield Rehabilitation

DEPARTMENT: Engineering

GOAL: 2 - Infrastructure

RECOMMENDED MOTION: Move to approve Change Order No. 1 to Task Authorization No. 4 with Zev Cohen and Associates, Inc. for the City Center Ballfield Rehabilitation for the amount not to exceed $24,750 and authorize the Mayor and City Clerk to execute all required documents.

SUMMARY: On May 21, 2024, Council approved Task Authorization No. 4 under the Master Contract for Engineering Services CA7764 (RSFQ #21-03) for the City Center Ballfield Rehabilitation Project in the amount of $286,500.

The Engineering Department is requesting approval of Change Order No. 1 to Task Authorization No. 4 in the amount of $24,750 for a revised amount of $311,250.

Change Order No. 1 is necessary for additional services for electrical engineering associated with the ballfield lighting and for the design and permitting of a sanitary sewer line to serve the future restroom facility. The sanitary sewer line was originally planned to be installed as part of the upcoming Restroom & Concession project at the City Center Sports Complex, intended to serve Fields 4, 5, and the soccer fields. However, since the City Center Ballfield Rehabilitation project is scheduled to begin before the restroom project, Parks & Recreation and Engineering have coordinated to include the design and installation of the sewer line in the rehabilitation project instead. This will avoid the need to dig up newly completed work later to install the line with the restroom project.



PRESENTER: Junos Reed

ATTACHMENTS:

1.	Zev Cohen and Associates, Inc. Change Order No. 1 to Task Authorization No. 4 - Change Order 1 - City Center Ballfield Rehab	Zev Cohen and Associates, Inc. TChange Order No. 1 to Task Authorization No. 4 - Change Order 1 - City Center Ballfield Rehab.pdf
2.	Zev Cohen TA4 CO1 Scope	Zev Cohen TA4 CO1 Scope.pdf
3.	Executed NTP	Executed NTP.pdf
4.	Executed Zev Cohen Renewal Form 1-13-2025	Executed Zev Cohen Renewal Form 1-13-2025.pdf

5.	Master Contract Zev Cohen and Associates CA7764	Master Contract Zev Cohen and Associates CA7764.pdf
6.	Zev Cohen COI 2025	Zev Cohen COI 2025.pdf

Julia Wiggins	Created/Initiated - 05/29/2025
Richard Colby	Approved - 05/29/2025
Junos Reed	Approved - 06/05/2025
Jill Poolman	Approved - 06/10/2025
Mark Simpson	Approved - 06/12/2025
Matthew Jones	Approved - 08/06/2025
Wayne Clark	Approved - 08/07/2025
Amanda Bonin	Final Approval - 08/08/2025

CHANGE ORDER NO. 1
To Task Authorization 4, dated May 21, 2024
ZEV COHEN AND ASSOCIATES, INC. Contractor

Project: City Center Ball Field Rehabilitation Project

The following changes are hereby made to the Contract Documents:

CHANGE IN CONTRACT PRICE:	**CHANGE IN CONTRACT TIMES**:
Original Contract Price: $286,500.00	Original Contract Times: 36 months Notice to Proceed (NTP) Issued: June 5, 2024 Completion: June 5, 2027
Net changes from previous Change Order: N/A	Changes in contract time from previous Change Orders: N/A
Contract Price prior to this Change Order: $286,500.00	Contract Completion Date prior to this Change Order: June 5, 2027
Net Increase (decrease) of this Change Order: No. 1 $24,750.00	Changes in contract time requested this Change Order: No. 1 0 days
Contract Price with all approved Change Orders: $311,250.00	Contract Times with all approved Change Orders: Completion: June 5, 2027

CHANGES ORDERED:

I. GENERAL: This Change Order is necessary to cover changes in the work to be performed under the Task Authorization No 4; entered into by and between the parties on May 21, 2024.

II. REQUIRED CHANGES: Change Order is necessary to provide additional electrical engineering associated with ballfield lighting and for design and permitting of sanitary sewer line to serve the future restroom facility.

III. JUSTIFICATION: Change Order is necessary for the additional engineering services to complete the project.

IV. PAYMENT: Payment for this Change Order shall be made in accordance with the terms of Task Authorization No 4; subject to a limit not to exceed $24,750.00; revised amount of $311,250.00. All payments shall be governed by the Local Government Prompt Payment Act as set forth in Florida Statutes Section 218.70 through 218.79, as amended.

V. This Change Order may be executed in one or more counterparts, each of which shall be deemed to be an original but all of which together shall constitute one and the same instrument. The delivery by facsimile or e-mail of an executed copy of this Change Order shall be deemed valid as if an original signature was delivered. No contract shall be formed between the Contractor and the City until the City signs this Change Order.

Acknowledgments:

The aforementioned change, and work affected thereby, is subject to all provisions of the original contract not specifically changed by this Change Order;

It is expressly understood and agreed that the approval of the Change Order shall have no effect on the original contract other than matters expressly provided herein;

The prices quoted are fair and reasonable and in proper ratio to the cost of the original work contracted for under competitive bidding; and,

The change in price and/or delivery date described is considered to be fair and reasonable and has been mutually agreed upon in full agreement and final settlement of all claims arising out of this modification including all claims for delays and disruptions resulting from, caused by, or incident to such modifications and change orders.

RECOMMENDED BY: **RICHARD COLBY** Department Project Manager	ACCEPTED BY: **ROBERT J. BALL** Zev Cohen and Associates, Inc.
By:_____ Richard Colby, Construction Manager	By:_____ Robert J, Ball President
Date Signed:_____	Date Signed:_____
RECOMMENDED BY: **N/A** City's Representative	RECOMMENDED BY: **N/A** Engineer of Record
By:_____ Printed Name:_____ Title:_____	By:_____ Printed Name:_____ Title:_____
Date Signed:_____	Date Signed:_____

APPROVED BY:
CITY OF PORT ORANGE
Department Head

By:_____
Junos Reed, City Engineer

Date Signed:_____

City Manager

By:_____
Wayne Clark, City Manager

Date Signed:_____

If Council approval is required:

Affirmed:

By:_____
Scott Stiltner, Mayor

_____
Robin L. Fenwick, MMC, City Clerk

Date Signed:_____

Date Signed:_____

Zev Cohen and Associates, Inc.

General Scope of Work Per the request of City of Port Orange (CITY) staff, ZCA has prepared the following Scope of Services for a task assignment to provide professional engineering services to assist CITY staff with short-term and long-term stabilization of recreation playing fields that have been constructed over an old municipal dump site. Through services provided by ZCA and it's subcontractor (Haddad Engineering, Inc.) this task assignment is to address required electrical changes in the project which were not previously contemplated.

In addition, in an effort to combine projects and consolidate some construction activities, the City wants to install the adjacent restroom sanitary sewer main with this project. As a result, ZCA shall incorporate the sewer design into the current project. Similar to the remainder of the project, we assume City approval will occur internally.

Task 1.0 Electrical Design

- Site investigation to survey existing panelboards and lighting control.
- Prepare electrical drawings for new circuits to existing pole.
- Construction administration, review shop drawings, respond to RFI's and one (1) site visit to inspect the electrical installation (if required).

Task 2.0 Sanitary Sewer Design

- Sanitary sewer design (plan and profile) and specifications.
- DEP permitting for wastewater.

Fee Schedule

Task 1 – $10,000.00
Task 2 - $14,750.00

Lump Sum Fixed Fee: $24,750.00

RJB/ns
24043c02 TA #2 REV 5.6.25

Zev Cohen and Associates, Inc.

General Scope of Work Per the request of City of Port Orange (CITY) staff, ZCA has prepared the following Scope of Services for a task assignment to provide professional engineering services to assist CITY staff with short-term and long-term stabilization of recreation playing fields that have been constructed over an old municipal dump site. Through services provided by ZCA and it's subcontractor (Haddad Engineering, Inc.) this task assignment is to address required electrical changes in the project which were not previously contemplated.

In addition, in an effort to combine projects and consolidate some construction activities, the City wants to install the adjacent restroom sanitary sewer main with this project. As a result, ZCA shall incorporate the sewer design into the current project. Similar to the remainder of the project, we assume City approval will occur internally.

Task 1.0 Electrical Design

- Site investigation to survey existing panelboards and lighting control.
- Prepare electrical drawings for new circuits to existing pole.
- Construction administration, review shop drawings, respond to RFI's and one (1) site visit to inspect the electrical installation (if required).

Task 2.0 Sanitary Sewer Design

- Sanitary sewer design (plan and profile) and specifications.
- DEP permitting for wastewater.

Fee Schedule

Task 1 – $10,000.00
Task 2 - $14,750.00

Lump Sum Fixed Fee: $24,750.00

RJB/ns
24043c02 TA #2 REV 5.6.25

CITY OF PORT ORANGE
NOTICE TO PROCEED

Issued By: Junos Reed, City Engineer
Engineering Department
1395 Dunlawton Avenue
Port Orange, FL 32129
Ph:(386) 506-5751
jwiggins@port-orange.org

Issued To: Zev Cohen & Associates, Inc
300 Interchange Blvd
Suite C
Ormond Beach, FL 32714

PROJECT TITLE: **Task Authorization No 4 – City Center Ball Field Rehabilitation Project**
Project QIO206 (PO-003909)

This **Notice to Proceed** issued to your company is for the above referenced project and in accordance with Task Authorization No 4, under the Master Contract for Services CA7764, and all terms and conditions of the agreement between the City of Port Orange and **Zev Cohen & Associates, Inc.** The **effective date** of this **Notice to Proceed** is **June 5, 2024,** with a **Final Completion** by **June 5, 2027**.

Please sign below acknowledging and agreeing to the contents of this Notice to Proceed and return a copy of this form to Julia Wiggins, Engineering Business Manager via email jwiggins@port-orange.org.

Project Manager: Junos Reed, City Engineer

All future correspondence or requests for changes to the contract must be addressed to City Engineer

---

ISSUED BY:

Owner: City of Port Orange

This 17th day of June, 2024

By: _____
Junos Reed

Title: City Engineer

ACCEPTANCE NOTICE:

Receipt of the foregoing Notice to Proceed is hereby acknowledged and agreed by:

Company: Zev Cohen & Associates, Inc.

This 14th day of June, 2024

By: _____
Robert J. Ball

Title: President

CITY OF PORT ORANGE

Agreement

RENEWAL FORM

*****THIS FORM IS VALID IF EXECUTED PRIOR TO THE ORIGINAL AGREEMENT/CONTRACT EXPIRATION DATE*****

Verify your records by providing the following information:

Name of Company/Organization: Zev Cohen and Associates, Inc. ("Contractor")

Name of Contact Person: M.Dwight Durant, Director

Mailing Address: 300 Interchange Blvd, Suite C
Ormond Beach, FL 32174

E-Mail Contact Address: ddurant@zevcohen.com

Phone: (386) 677-2482 Fax: (386) 677-2505

- ☒ Standard Contract for Service CA No. 7764
- ☐ Piggyback Agreement CA No. _____
- ☐ Purchase Order No. _____

Renewal Term: From January 18, 2025 To: January 17, 2026

Contractor to Provide to City:

- ☐ ~~Updated Bond~~ N/A
- ☑ Insurance Certificate/City as additional insured and Waiver of Subrogation for WC

To be completed by the Contractor:

YES X Contractor desires to renew this Agreement for another term at the same price, requirements, specifications, and conditions as provided for above.

NO _____ Contractor does not desire to renew this Agreement for another term.

If this Contract is signed by an individual not identified as an Officer of the Entity in the records of the Florida Department of State, Division of Corporations, please provide written authorization for that individual to enter into contracts on behalf of the Entity.

Contractor's Authorized Representative: _____ **Date:** 1-8-2025
Signature

Please return to the City of Port Orange as follows:

Department: Engineering Department Telephone: (386) 506-5751

Contract: Julia Wiggins, Business Manager Fax: (386) 756-5370

E-Mai: **jwiggins@port-orange.org**

For City Use Only:

Department Completes the Following:

- ☒ Renewal Accepted by the Department
- ☐ Bond received by the Department ***OR*** ☒ Bond not applicable
- ☒ Insurance Certificate received by the Department ***OR*** ☐ Insurance waived by City Manager

City Manager: _____ **Date:** 1/13/2025

Original Signed Form Must Be Returned to the City Clerk

CITY OF PORT ORANGE MASTER CONTRACT PROFESSIONAL ENGINEERING SERVICES FOR PUBLIC WORKS, UTILITIES AND ENVIRONMENTAL SERVICES

This Standard Contract for Services ("Contract") is entered into this 18 day of Jan, **2022**, by and between the **CITY OF PORT ORANGE**, a Florida municipal corporation, whose principal address is 1000 City Center Circle, Port Orange, Florida 32129 (the "City"), and **ZEV COHEN AND ASSOCIATES, INC.**, a Florida corporation, whose principal address is 300 Interchange Boulevard, Suite C, Ormond Beach, Florida 32174. ("Engineer"). The City and Engineer are collectively referred to herein as the "Parties."

The City and the Engineer for Ten Dollars ($10.00) and other good and valuable consideration hereby covenant and agree as set forth below.

1. *Provision of Services*

(a) The Engineer hereby agrees to provide the following services to the City of Port Orange:

(i) Professional continuous utility engineering consulting services to complete a wide range of projects led by the City of Port Orange Public Works and Utilities Department in accordance with Consultants Competitive Negotiation Act, and as more specifically described in Request for Statement of Qualifications 21-03 ("RFSQ 21-03"). This Contract together with RFSQ 21-03, Addendum No. 1, Addendum No. 2, and Engineer's Proposal, all of which may be referred to as the "Contract" and all of which are made a part hereof by reference shall constitute the formal written Contract between the City and Engineer. For convenience, Section 3, Scope of Services, of RFSQ 21-03, and the Hourly Rate Schedule as submitted by Engineer in Engineer's Proposal are attached hereto as Exhibit "1." A complete copy of RFSQ 21-03 is available in the Office of the City Clerk. Engineer represents that they are familiar with the documents that make up the Contract, as referenced hereinabove.

(b) The time, manner and place for performance of such services shall be:

Term: The term of this Contract shall commence on the date this Contract is signed by both of the Parties, and shall continue for a period of three (3) years, or until either party provides the other party written notice of its intent to terminate as provided in this Contract.

Renewals: Upon written agreement of the Parties and appropriation by City Council, this Contract may be renewed for up to two (2) additional one (1) year periods.

Manner and Place: The Engineer shall perform the services as outlined in each project assignment, in accordance with Standard Construction Details as required on all City owned facilities and properties (i.e. rights-of-way) and in a manner as required by all current federal, state, county, fire, building and land development codes, laws, ordinances and regulations, and with applicable permits and licenses per the City Code of Ordinances. Engineer shall not deliver goods or services without a fully executed task authorization and a written purchase order, signed by an authorized agent of the City of Port Orange.

Time and Essence: Engineer acknowledges that time is of the essence in the completion of the services contemplated by this contract, and shall complete all services within the timeline specified by this contract, and shall complete all services within the timeline specified in the project, and as reflected on the Notice to Proceed.

2. *Authorization for Services* This Contract standing alone does not authorize the performance of any work or services to be provided by the Engineer or require the City to place any orders for work or service. Authorization for performance of services by the Engineer under this Contract shall be in the form of written Task Authorization(s) ("Task Authorization") issued and executed by the City and signed by the Engineer. A sample Task Authorization is attached hereto as Exhibit "2."

   a. All Task Authorizations issued under this Contract shall terminate at the expiration of the term of the Task Authorization, unless amended in writing by the parties. If a Task Authorization issued before the expiration of this Contract cannot be completed until after the expiration of this Contract, then this Contract shall expire on the Completion of Services under said Task Authorization, including any Amendments thereto, and after all work or services under the Task Authorization have been approved and accepted by the City's Contract Administrator. The obligations entered herein by both parties under this Contract and said Task Authorizations shall remain in full force and effect until completion of all work or services performed under this Contract and/or the Task Authorization.

   b. No new or additional Task Authorization shall be issued after the original expiration date of this Contract. The extension of this Contract to coincide with the completion of an existing Task Authorization issued prior to the original expiration date of this Contract shall not be construed as or constitute authorization by the City or the Engineer to enter into a new or additional Task Authorization after the original expiration date of this Contract, unless this Contract is renewed prior to entering into a Contract for a new or additional Task Authorization.

3. *City Obligations* The City reserves the right to utilize lump sum or hourly rate compensation, at the hourly rate compensation as set forth in Exhibit "1." Rates may be adjusted on the anniversary of the effective date of this Contract, upon mutual written agreement of the Parties. The City's obligation to pay Engineer under this Contract is limited to an amount not to exceed the appropriated budget per fiscal year. All payments shall be governed by the Local Government Prompt Payment Act as set forth in Sections 218.70 through 218.79, Florida Statutes, as amended. The Engineer shall be paid compensation for all services, labor and material required thereby, and for all expenditures as specified in each Task Authorization. The fee shall be negotiated for each Project Task Authorization to this Contract. The Engineer shall submit a monthly statement for professional services rendered and expenses incurred to date of the statement. The statements for lump sum shall be based upon Engineer's estimate of the proportion of the total services actually completed at the time of billing to the total services to be performed. Such estimates are to be prepared by the Engineer and accompanied by such supporting data as may be required by the Contract Administrator. Compensation for any authorized cost which is not set forth in the Contract shall not exceed the actual, documented out-of-pocket cost to the Engineer. The Contract and Task Authorization(s) do not include retainer fees, nor is there a minimum fee guaranteed during the Contract period.

4. *Contract Administration* The Public Works and Utilities Director, Lynn Stevens, shall perform contract administration of this Contract. The City may change the contract administrator, from time to time and at any time, upon written notice to Engineer. For notice provisions, see the paragraph below entitled "Notice."

5. *Liens* Engineer acknowledges that Engineer shall not be entitled to lien the City or other public property.

6. *Statement of Engineering Services* The Engineer shall:

(a) Provide all certifications ("Engineer of Record" function) surveys, calculations, drawings, and any other documents required for special permits and authorizations from various government bodies or agencies having jurisdiction over the project;

(b) Prepare a time scaled diagram showing the dates of completion of various design phases and scheduled completion of working drawings and specifications and submit for Contract Administrator's review and approval;

(c) Verify and evaluate technical proposals furnished by the construction Engineer if requested by the City and provide such amplifications and explanations that may be necessary to clarify the intent of the drawings and specifications.

(d) Furnish consultation and advice as requested by the City during the construction of project, including Construction Administration Services (unless otherwise stipulated in a specific amendment attached hereto and made a part thereof);

(e) Furnish all other engineering services including without limitation those specified hereinafter and those required for the completion of specific projects as described in amendments to this contract:

(i) *Site Visits/Special Permits* The Engineer shall visit the site and shall initiate and hold such conferences with representatives of the City and other agencies, boards or government bodies having jurisdiction over the area the project covers and take such other action as may be necessary to obtain permits and authorizations (except the construction permits) and other data upon which to develop the design and preliminary sketches showing the contemplated project.

(ii) *Preliminary Sketches and Opinion of Probable Construction Costs* The preliminary sketches shall include plans, elevations and sections development in such detail and with such descriptive specifications as will clearly indicate the scope of work, and make possible a reasonable opinion of the construction cost and satisfy the requirements of permitting and regulatory agencies having jurisdiction. An opinion of probable construction costs shall be prepared.

(iii) *Working Drawings and Specifications* After the preliminary sketches and opinion of probable construction costs have been approved, the Engineer shall proceed with the preparation of working drawings and specifications as required by the Contract Administrator for the construction of said project. Working drawings, specifications and estimates shall be delivered to the Contract Administrator in such sequence and at such times as required by the City such that the construction work can be initiated promptly, procurement of materials made without delay and continuous prosecution of the work promoted, all in strict accordance with the approved design schedule as provided in Paragraph 5 (b) above. Working drawings and specifications shall be revised as necessary and as required by the Contract Administrator. After working drawings and specifications have been approved by the Contract Administrator, the Engineer shall furnish such number of sets of prints of the approved working drawings and such number of sets of the approved specifications, as may be required by the Contract Administrator.

(iv) *Original Drawings - Final Plans* Upon approval of final plans the Engineer shall deliver to the City one set of original drawings, in such medium and on such materials, as may be required by the Contract Administrator, suitable for blueprinting, showing approved constructed requirements (not of "as-built" construction unless otherwise stipulated), provided, however, that should this contract be terminated by the City the Engineer shall deliver to the City one set of originals as they exist at the time of termination. Such plans as are delivered shall become and remain the property of the City.

(v) *Revision of Final Drawings and Specifications* The engineer shall without additional fee correct and revise the drawings, specifications, or other materials furnished under this contract, if the Contract Administrator finds that such revision is necessary to correct errors or deficiencies for which the Engineer is responsible.

(vi) *Bidding* The Engineer shall perform all necessary engineering services required in connection with the competitive bidding for construction of the project and the preparation of all documents required thereof, including preparation of documents for separate bid packages for multiple contractors if so required by Contract Administrator.

7. *Responsibility of the Engineer* The Engineer shall be responsible for the professional and technical accuracy and the coordination of all designs, drawings, and specifications and other work or materials furnished by the Engineer under this contract. The Engineer shall without additional cost or fee to the City, correct or revise any errors or deficiencies in his performance.

8. *Reuse of Documents* The City shall have unlimited rights, for the benefit of the City in all drawings, designs, specifications, notes and other engineer's work produced in the performance of this contract, or in contemplation thereof, and all as-built drawings produced after completion of the work, including the right to use same on any other City work without additional cost to the City. All documents including Drawings and Specifications prepared by Engineer pursuant to this Contract are instruments of service in respect of the Project. They are not intended or represented to be suitable for reuse by City or others for any other project. Reuse for another project without written verification or adaption by Engineer for the specific purpose intended will be at City's risk. Any such verification or adaption will entitle Engineer to further compensation at rates to be agreed upon by City and Engineer. A reproducible set of plans and specifications shall be delivered to and become the property of the City upon completion of the Project by the Engineer.

9. *Expert Witness* The Engineer shall serve as an expert witness for the City in any legal proceedings regarding this project if the City so requests. The expert witness fee for Engineer shall be negotiated at the time the Engineer is called as an expert.

10. *Modifications to Scope of Work/Change Orders*

(a) Change Orders. The Contract Administrator, upon written approval as required by the City's Purchasing Policy, shall without notice to any sureties, have the authority to order changes in this Contract which affect the cost or time of performance. Such changes shall be ordered in writing specifically designated to be a change order. Such orders shall be limited to reasonable changes in one or more of the following: the services to be performed, the contract price or the time of the performance. The City will not be held liable for any changes which have not been properly authorized and approved in accordance with this Contract.

(b) If any change under this clause causes an increase or decrease in Engineer's cost of, or time required for the performance of the work hereunder, Engineer shall receive an equitable adjustment and the contract

shall be modified in writing accordingly. Any change shall include all costs and damages related to or incidental to such change.

(c) Any claim by the Engineer for adjustment under this clause shall be asserted in writing within thirty (30) days from the date of receipt by the Engineer of the notification of change unless the Contract Administrator grants a further period of time before the date of final payment under the contract. The Engineer shall proceed with the prosecution of the work as changed. Except as provided in this Contract, the Engineer shall not be entitled to payment for a charge for any extra work or material.

11. *Subcontractors or Sub-Subcontractors*

(a) Any subcontractors and outside associates or consultants required by the Engineer in connection with the services covered by the Contract will be limited to such individuals or firms as are specifically identified in an amendment to this Contract. Any substitution in such subcontractors, associates, or consultants shall be subject to the prior approval of the Contract Administrator.

(b) Engineer shall save and hold the City harmless from any and all claims or actions by Engineer's Subcontractors or Sub-subcontractors for payment of monies such Subcontractor of Sub-subcontractor claims to be owed by Engineer for work performed under this Contract.

(c) Nothing in this Contract shall create any obligation on the part of the City to pay directly to any Subcontractors of Sub-subcontractors or claims of a Subcontractor or Sub-subcontractors for amounts owed by Engineer to Subcontractor or Sub-subcontractor for work performed under this Contract.

(d) Engineer shall be fully responsible for all negligent acts and omissions of it Subcontractors and Sub-subcontractors and of persons directly or indirectly employed by them and of persons of whose negligent acts any of them may be liable to the same extent that it is responsible for the negligent acts and omissions of persons directly employed by it. Nothing in the Contract documents shall create any contractual relationship between any subcontractor and the City or any obligation on the part of the City to pay or to see to the payment of any moneys due any subcontractor to the extent practicable, evidence of amounts paid to the Engineer on account of specific work done in accordance with the schedule of values.

(e) The Engineer shall require all subcontractors or sub-subcontractors or outside associates employed in connection with the performance of this Contract to comply fully with the terms and conditions of this Contract between the City and the Engineer.

12. Termination

(a) The performance of work under this Contract may be terminated by the City in accordance with this clause in whole, or from time to time in part, whenever the Contract Administrator shall determine that such termination is in the best interest of the City. Any such termination shall be effected by delivery to the Engineer of a Notice of Termination specifying the extent to which performance of work under the Contract is terminated, and the date upon which such termination becomes effective.

(b) After receipt of a Notice of Termination, and except as otherwise directed by the Contract Administrator, the Engineer shall:

(i) Stop work under the Contract on the date and to the extent specified in the Notice of Termination.

(ii) Place no further orders or subcontracts for materials, services or facilities, except as may be necessary for completion of such portion of the work under the Contract as it is not terminated.

(iii) Terminate all orders and subcontracts to the extent that they relate to the performance of work terminated by the Notice of Termination.

(iv) Assign to the City in the manner, at the times and to the extent directed by the Contract Administrator, all of the right, title, and interest of the Engineer under the orders and subcontracts so terminated, in which case the City shall have the right, in its discretion, to settle or pay any or all claims arising out of the termination of such orders and subcontracts.

(v) Settle all outstanding liabilities and all claims arising out of such termination of orders and subcontracts, with the approval or ratification of the Contract Administrator, to the extent the City may require which approval or ratification shall be final for all the purposes of this clause.

(vi) Transfer title and deliver to the City in the manner, at the times, and to the extent, if any, directed by the Contract Administrator.

a. The fabricated or unfabricated parts, work in process, completed work, supplies, and other material produced as a part of, or acquired in connection with the performance of, the work terminated by the Notice of Termination; and

b. The completed or partially completed plans, drawings, information, and other property which, if the contract has been completed, would have been required to be furnished to the City.

(vii) Complete performance of such part of the work as shall not have been terminated by the Notice of Termination.

(c) After receipt of a Notice of Termination, the Engineer shall submit to the City's Contract Administrator his termination claim, in the form and with certification prescribed by the Contract Administrator. Such claim shall be submitted promptly but in no event later than thirty (30) days from the effective date of termination, unless one or more extensions in writing are granted by the Contract Administrator, upon request of the Engineer made in writing within such thirty (30) days period or authorized extension thereof. Upon failure of the Engineer to submit his termination claim within the time allowed, the Contract Administrator may determine on the basis of information available to him, the amount, if any, due to the Engineer by reason of the termination and shall thereupon pay to the Engineer the amount so determined.

(d) Subject to the provisions of Paragraph 11 (c), the Engineer and the Contract Administrator may agree upon the whole or any part of the amount or amounts to be paid the Engineer by reason of the total or partial termination of work pursuant to this clause, the total or partial termination of work pursuant to this clause, which amount or amounts may include a reasonable allowance for profit on work done; provided, that such agreed amount or amounts exclusive of settlement costs, shall not exceed the total contract price as reduced by the amount of payments otherwise made and as further reduced by the contract price of work not terminated. The Contract shall be amended accordingly and the Engineer shall be paid the agreed amount. Nothing in Paragraph 11 prescribing the amount to be paid to the Engineer, shall be deemed to limit, restrict, or otherwise determine or affect the amount or amounts which may be agreed upon to be paid.

(e) In the event of the failure of the Engineer and the Contract Administrator to agree as provided in Paragraph 11 (d), upon the whole amount to be paid to the Engineer by reason of the termination of work pursuant to this subparagraph, the Contract Administrator shall pay to the Engineer the amounts determined by the Contract Administrator, but without duplication of any amounts agreed upon, as follows:

(i) For completed work and services accepted by the City, the price or prices specified in the contract for such work, less any payments previously made.

(ii) The total of:

a. The costs incurred in the performance of the work and service terminated, including initial costs and preparatory expenses allocable thereto, but exclusive of any costs attributable to the work and services paid or to be paid for under Paragraph 11 (e)(i) hereof;

b. The cost of settling and paying claims arising out of the termination of work or services under subcontracts or orders as provided in Paragraph 11 (b)(v) above, which are properly chargeable to the terminated portion of the contract exclusive of amounts paid or payable on account of work or services delivered or furnished by subcontractors prior to the effective date of termination, which amounts shall be included in the costs payable under Paragraph 11 (a) above; and

c. A sum, as profit on Paragraph 11 (a) above, determined by the Contract Administrator to be fair and reasonable, not to exceed 5% of the Task Authorization.

(iii) In the event the contract is terminated because of Engineer's default, the City may take over the work and services and complete the same by contract or otherwise, and the Engineer shall be liable to the City for any increased cost of the project.

13. *Termination for Non-Appropriation of Funds*

(a) If funds are not appropriated for any succeeding fiscal years subsequent to the one in which this contract is entered into, for the purpose of this Contract, then the City may terminate this Contract upon thirty (30) days prior written notice to the Engineer. Should termination be accomplished in accordance with this Section, the City shall be liable only for payments due through the date of termination. The City agrees that should it terminate in accordance with this Section, it shall not obtain services which are substantially equal to or similar to those for which this contract was entered into. This provision shall survive any termination of the Contract.

14. *Engineer's Records*. The design, permits and all other records prepared by the Engineer, assembled for the City, subcontracted for the City, and any other records related to the scope of work in the possession of the Engineer shall be retained by the Engineer for the requisite time set forth in Florida Administrative Code Rule 1 B-24 http://dos.myflorida.com/library-archives/records-management/. Engineer may dispose of the records in accordance with Florida law, upon receipt of a signed written release signed by the City Attorney. During the term of this Contract, as amended from time to time, Engineer agrees to indemnify the City for failure to comply with the requirements of this paragraph including costs of litigation and legal fees incurred through all appeals. City reserves the right to select and approve the defense attorney. The Engineer's obligations pursuant to this paragraph shall survive the termination of this Contract, and as amended from time to time.

15. *Examination of Records*

(a) The Engineer agrees that the City, or any duly authorized representative, shall, until the expiration of five (5) years after final payment hereunder, have access to and the right to examine and copy any pertinent books, documents, papers and records of the Engineer involving transactions related to this Contract.

(b) The Engineer further agrees to include in any subcontract for more than $10,000 entered into as a result of this Contract, a provision to the effect that the subcontractor agrees that the City or any duly authorized representative shall, until the expiration of five (5) years after final payment under the subcontract, have access to

and the right to examine and copy any pertinent books, documents, papers and records of such Engineer involved in transactions related to such subcontract, or this Contract. The term subcontract as used herein shall exclude purchase orders for public utility services at rates established for uniform applicability to the general public.

(c) The period of access provided in subparagraphs (a) and (b) above for records, books, documents and papers which may relate to any arbitration, litigation, or the settlement of claims arising out of the performance of this contract or any subcontract shall continue until any appeals, arbitration, litigation or claims shall have been finally disposed of.

16. *Public Records Compliance* Engineer shall comply with public records laws as set forth in Chapter 119, Florida Statutes, and shall specifically:

(a) Keep and maintain public records required by the City to perform the service.

(b) Upon request from the City's custodian of public records, provide the City with a copy of the requested record or allow the records to be inspected or copied within a reasonable time at a cost that does not exceed the cost provided in Section 119, Florida Statutes, or as otherwise provided by law.

(c) Ensure that public records that are exempt from public records disclosure requirements are not disclosed except as authorized by law for the duration of the Contract term and following completion of the Contract if the Engineer does not transfer the records to the City.

(d) Upon completion of the Contract, Engineer shall transfer to the City, at no cost, all public records in possession of the Engineer and destroy any duplicate public records that are exempt from public records disclosure requirements. All records stored electronically must be provided to the City, upon request from the City's custodian of public records, in a format that is compatible with the information technology systems of the City.

If Engineer does not comply with a public records request, the City shall deem the non-compliance a breach of this Contract, and the Engineer may be subject to penalties under Section 119.0701, Florida Statutes.

ENGINEER QUESTIONS RELATING TO ENGINEER'S DUTIES TO PROVIDE PUBLIC RECORDS RELATING TO THIS CONTRACT MUST BE FORWARDED TO THE OFFICE OF THE CITY CLERK, CITY HALL, 1000 CITY CENTER CIRCLE, PORT ORANGE, FLORIDA 32129; TELEPHONE: (386) 506-5563; E-MAIL: CITYCLERK@PORT-ORANGE.ORG.

17. *Insurance* Engineer shall maintain insurance, as required herein, during the life of this Contract. Engineer shall provide to the City, a certificate of insurance endorsing the City of Port Orange as an additional named insured. All insurance coverages of the Engineer shall be primary and non-contributory. All insurance coverages of the Engineer shall not seek contribution from any other insurance or self-insurance available to the City. For workers' compensation coverage, the Engineer's insurance certificate shall include the insurer's waiver of subrogation in lieu of endorsing the City as an additional insured for workers' compensation. The City shall not accept Workers' Compensation Exemptions Engineer may use leased employees if the Engineer ensures that all workers who access the jobsite are employees covered by the employee leasing company, and no non-employees are permitted to access the jobsite. Any Engineer using a leased employee shall complete the City's Leased Employee Affidavit Form Exhibit. Policies for Workers' Compensation may be issued by companies authorized as a group self-insurer by F.S. 440.572.

Policies other than Workers' Compensation shall be issued by insurers licensed and/or duly authorized under Florida Law to do business in the State of Florida and all insuring companies are required to have a minimum rating of "A-" in the "Best Key Rating Guide" published by A.M. Best & Company, Inc. Engineer shall not commence work under this Contract until the City has received a certificate or certificates of insurance with endorsement evidencing

the required insurance. Insurer shall provide the City written notice of cancellation, nonrenewal or any other changes in coverage no later than thirty (30) days prior to the effective date of the change and shall provide notice to the City no later than 10 days after non-payment. The Certificates of Insurance and required insurance policies shall contain provisions that thirty (30) days prior written notice shall be given to the City of any cancellation, intent not to renew, or reduction in the policies or coverages.

Engineer shall require and ensure each of its subcontractors to maintain, until the completion of the subcontractor's work, insurance of the types and to the limits set forth herein. All insurance coverages shall be primary and non-contributory. All insurance coverages of the subcontractors shall not seek contribution from any other insurance or self-insurance available to the City. The Engineer is responsible for ensuring that its subcontractors maintain the required coverage. Failure of the Engineer to ensure the subcontractors maintain the required coverage, shall not relieve the Engineer of any contractual responsibility, obligation or liability.

The City reserves the right to increase insurance coverage as determined for higher risk contracts.

The acceptance by the City of any Certificate of Insurance does not constitute approval or agreement by the City that the insurance requirements have been satisfied or that the insurance policy shown on the Certificate of Insurance is in compliance with this Contract and does not waive the insurance required by this Contract.

Should at any time the Engineer or subcontractors not maintain the insurance coverages required herein, the City may terminate the Contract or at its sole discretion shall be authorized to purchase such coverages and charge the Engineer for such coverages purchased. The City shall be under no obligation to purchase such insurance, nor shall it be responsible for the coverages purchased or the insurance company or companies used. The decision of the City to purchase such insurance coverages shall in no way be construed to be a waiver of any of its rights under the Contract.

Standard Insurance Requirements			
	Insurance	**Standards**	**Additional Requirements**
☒	Workers' Compensation The Engineer shall maintain coverage for its employees with statutory workers' compensation limits, and no less than the limits indicated in the Schedule of Limits for Employers' Liability. Said coverage shall include a waiver of subrogation in favor of the City. **The City will not accept elective exemptions.** Any Engineer using an employee leasing company shall complete the Leased Employee Affidavit (Exhibit A).	Contract Amount — Limits Up to $10 million — Statutory/$500,000 $10 - $20 million — Statutory/$1,000,000 Contracts over $20 million To Be Determined by the City.	☐If Contract requires work on or about navigable waters, Longshoreman's and Harbor Workers' Coverage required. ☐If vessels involved, Jones Act coverage with limits of $500,000 required.

☒	Comprehensive General Liability (including Completed Operations and Contractual Liability	Limits:	Combined Single Limit Bodily Injury and Property damage $1,000,000 occurrence $1,000,000 aggregate	☐When work is on or under Railroad rights of way or properties, the Engineer shall take out and maintain during the life of the Contract, Railroad protective liability and property damage insurance in amounts as requested by the Railroad.
☒	Comprehensive Business, Automobile Liability to include all owned, hired and non-owned automobiles.	Limits:	Auto Liability Body Injury and Property Damage: $1,000,000 each occurrence $1,000,000 aggregate	
	Additional Insurance Requirements			
☐	Property Insurance Builders Risk. Additional Coverage:	Limits:	Buildings - Completed value of Contract. "All Risk" coverage on latest ISO for or its equivalent. Permission granted to occupy. Owner named as insured AIMA	If Agreement requires handling or installation of Owner's equipment, coverage should be furnished on "All Risk" form, including transit and Owner shall be named.
☒	Professional Liability	Limits:	Coverage - $1,000,000	
☐	Installation Floater (IT)	Limits:	Coverage - $ To be determined.	
☐	Engineer Pollution Liability	Limits:	Coverage - $1,000,000	
☒	Errors and Omissions	Limits:	Coverage - $1,000,000	
☐	Umbrella Policy	Limits:	Coverage – $ To be determined.	
☐	Payment and Performance Bond Required	Limits:	Coverage - Equal to amount of Contract.	
☐	**City Manager waives Payment and Performance Bond for work under $25,000.00.**			
☐	**Unless otherwise required by law, City Manager waives Insurance for FOB goods under $25,000.00.**			

18. *Assignability of Contract* Neither this contract, nor any part hereof, may be assigned by the Engineer to any other party without the express written approval of the City Council.

19. *Sovereign Immunity*. The City expressly retains all rights, benefits and immunities of sovereign immunity in accordance with Section 768.28, Florida Statutes. Notwithstanding anything set forth in any section of this Contract to the contrary, nothing in this Contract shall be deemed as a waiver of immunity or limits of liability of the City beyond any statutory limited waiver of immunity or limits of liability which may have been adopted by the Florida Legislature or may be adopted by the Florida Legislature and the cap on the amount and liability of the City for damages regardless of the number or nature of claims in tort or equity shall not exceed the dollar amount set by the legislature for tort. Nothing in this Contract shall inure to the benefit of any third party for the purpose of allowing any claim against the City which would otherwise be barred under the Doctrine of Sovereign Immunity or operation of law.

20. *Liability for Loss or Damage*

(a) Engineer shall be liable for any loss of, or damage to, City property caused by the negligence, recklessness, or intended wrongful misconduct of Engineer, his/its agents, servants and employees and shall indemnify and save the City harmless against all actions, proceedings, claims, demands, costs, damages and expenses, including attorney's fees, by reason of any suit or action brought for any actual or alleged injury to or death

of any person or damage to property other than City property, to the extent caused by negligent performance of the Contract by Engineer, his/its agents, servants and employees. Engineer shall submit a full written report to the Finance Director within twenty-four (24) hours following the occurrence of such damage, loss or injury.

21. *Non-discrimination*. During the performance of this Contract, Engineer agrees as follows:

(a) Engineer will not discriminate against any employee or applicant for employment because of race, religion, color, sex, disability, marital status, age or national origin, except where such is a bona-fide occupational qualification reasonably necessary to the normal operation of Engineer. Engineer agrees to post in conspicuous places, available to employees and applicants for employment, notices setting forth the provisions of this non-discrimination clause. Engineer agrees and fully supports and complies with the Americans with Disabilities Act of 1990.

(b) Engineer shall state in all solicitations or advertisements for employees placed by or on behalf of Engineer that Engineer is an equal opportunity employer.

(c) Notices, advertisements and solicitations placed in accordance with federal law, rule or regulation shall be deemed sufficient compliance with this provision. Engineer shall include the provisions of the foregoing subparagraphs (a), (b), and (c) in every subcontract or purchase order of over $10,000 so that the provisions will be binding upon each subcontractor or vendor.

22. *E-Verify*. Engineer shall utilize the U.S. Department of Homeland Security's E-Verify system to verify the employment eligibility of all new employees hired by the Engineer on or after the effective date of this Contract and thereafter during the remaining term of this Contract, including all subcontractors. Any subcontract entered into by Engineer with any subcontractor performing work under this Contract shall include the following language: "The Sub-Engineer shall utilize the U.S. Department of Homeland Security's E-Verify system to verify the employment eligibility of all new employees hired by the Engineer on or after the effective date of this Contract and thereafter during the remaining term of the Contract." The Engineer covenants and agrees that if it is found in violation of this section of the Executive Order, such violation shall be a material breach of this Contract and Engineer shall indemnify, defend and hold harmless the City from any fines or penalties levied by a government agency, including the loss or repayment of grant funds by the City.

23. *Disputes* The City Manager, who shall reduce his decision to writing and mail or otherwise furnish a copy thereof to Engineer, shall decide disputes with respect to this Contract in the first instance. The decision shall be final and binding unless, within ten (10) days from the date of receipt of the decision of the City Manager, appeal is made to the City Council. The decision of the City Council shall be final and binding unless set aside by a court of competent jurisdiction as fraudulent, capricious, arbitrary, or so grossly erroneous as necessary to imply bad faith, or not to be supported by any evidence. Pending a final determination of a properly appealed decision of the City Council, Engineer shall proceed diligently with the performance of this Contract in accordance with that decision.

24. *Force Majeure* Neither party shall be liable for any delay in performance or failure to perform any obligation hereunder if, and to the extent that, such failure or delay is caused by an event of Force Majeure. Force Majeure shall mean any act, event or condition that is beyond the party's reasonable control, that materially and adversely affects the party's ability to perform its obligations hereunder, and that is not the result of the party's willful neglect, error, omission or failure to exercise reasonable due diligence.

25. *Controlling Law* **THIS AGREEMENT CONTAINS IMPORTANT MATTERS AFFECTING LEGAL RIGHTS AND IS ACCEPTED AND ENTERED INTO IN FLORIDA AND ANY QUESTION REGARDING ITS VALIDITY, CONSTRUCTION, ENFORCEMENT, OR PERFORMANCE SHALL BE GOVERNED BY FLORIDA LAW. ANY**

LEGAL PROCEEDING ARISING FROM OR IN ANY WAY REGARDING THE AGREEMENT SHALL HAVE ITS VENUE LOCATED EXCLUSIVELY IN THE CIRCUIT COURT OF VOLUSIA COUNTY, FLORIDA, AND THE PARTIES HEREBY EXPRESSLY CONSENT AND SUBMIT THEMSELVES TO THE PERSONAL JURISDICTION AND VENUE OF THE COURT.

26. *Additional Provisions*. This Contract includes all additional provisions as may have been outlined in written quotes and purchase orders and any attachments or exhibits to this Contract whether delivered herewith or subsequently approved as a part hereof, such as drawings or technical specifications prepared in the performance of this work. In the event of a conflict between any attachments or exhibits to this Contract, and this Contract, the language of this Contract shall control.

28. *Integration* This Contract and the documents incorporated herein by reference shall constitute the whole agreement between the parties. There are no promises, terms, conditions, or obligations other than those contained herein, and this Contract shall supersede all previous communications, representations, or agreements, written or verbal, between the parties hereto.

29. *Notice* For purposes of this agreement, notices shall be sent as follows:

City:
City of Port Orange
Attention: City Manager
1000 City Center Circle
Port Orange, Florida 32129
(386) 506-5501

Copy to:
City of Port Orange
Attention: Lynn Stevens, Public Works & Utilities Director
1000 City Center Circle
Port Orange, Florida 32129
(386) 506-5575

Engineer:
Zev Cohen and Associates, Inc.
Attention: M. Dwight Durant, Director
300 Interchange Boulevard
Suite C
Ormond Beach, Florida 32174
(386) 677-2482 - Telephone
(386) 677-2505 – Facsimile
ddurant@zevcohen.com

Any notice or other communication given under the Contract will be in writing and delivered by hand, sent by facsimile (provided acknowledgement of receipt thereof is delivered to the sender), sent by certified, registered mail, or sent by any nationally recognized overnight courier service to the addresses provided herein. The parties may, from time to time and at any time, change their respective addresses and each will have the right to specify as its address any other address by at least 10 days written notice to the other party.

30. *Truth-in-Negotiations*

(a) For any fixed fee, cost-plus-a-fixed-fee or guaranteed maximum-not-to-exceed compensation professional service contract or compensation in a Task Authorization over $150,000.00, Engineer shall execute a truth-in-

negotiation certificate stating that wage rates and other factual unit costs supporting the compensation are accurate, complete, and current at the time of contracting. Any professional service contract or Task Authorization under which such certificate is required must contain a provision that the original contract price or compensation and any additions thereto will be adjusted to exclude any significant sums by which the City determines the contract price or compensation was increased due to inaccurate, incomplete, or noncurrent wage rates and other factual unit costs. All such contract or compensation adjustments must be made within one (1) year following the end of the Contract. Otherwise, such adjustments shall be deemed waived by the Engineer and null and void for the purposes of this Contract or Task Authorization. The signature on this Contract by the Engineer shall act as the execution of a truth-in-negotiation certificate stating that the wage rates and other factual unit costs supporting the compensation of this Contract are accurate, complete, and current at the time of contracting.

(b) Engineer's signature on this Contract or a Task Authorization shall act as execution of a truth-in-negotiation certificate stating that wage rates and other factual unit costs supporting the compensation set forth in this Contract or a Task Authorization are accurate, complete, and current at the time of contract. The certification shall also constitute an affirmation that Engineer has disclosed all debts or fees owed to or that are pending before the City prior to the execution of this Contract of Task Authorization.

31. *Waiver of Breach and Materiality* Failure to enforce any provision of this Contract shall not be deemed a waiver of such provision or modification of this Contract. A waiver of any breach of a provision of this Contract shall not be deemed a waiver of any subsequent breach and shall not be construed as a modification of the terms of this Contract.

32. *Contract Construction*

This Agreement may be executed in one or more counterparts, each of which shall be deemed to be an original but all of which together shall constitute one and the same instrument. The delivery by facsimile or e-mail of an executed copy of this Agreement shall be deemed valid as if an original signature was delivered. No contract shall be formed between Engineer and the City until the City signs this Agreement.

33. *Authority to Sign* Each person signing this Agreement warrants that he or she is duly authorized to do so and to bind the respective party to the Agreement.

[Remainder of this page intentionally left blank]

Witnesses:

Printed Name: Jill Eckstein

Printed Name: Nina Squires

ZEV COHEN AND ASSOCIATES, INC.

By: _____
M. Dwight Durant, Director

If this Contract is signed by an individual not identified as the President of the corporation in the records of the Florida Department of State, Division of Corporations, please provide written authorization for that individual to enter into contracts on behalf of the corporation.

Date: 1/6/2022

STATE OF FLORIDA
COUNTY OF VOLUSIA

The foregoing instrument was acknowledged before me by means of ✓ physical presence or ___ online notarization, this 6th day of January, 2022, by M. Dwight Durant, as Director of Zev Cohen and Associates, Inc., a Florida corporation. He is ✓ personally known or ___ produced _____ as identification.

Notary Public State of Florida
Elizabeth J. Dobelbower
My Commission GG 947389
Expires 01/14/2024

_____
Notary Public, State of Florida
Printed, typed or stamped name, commission and expiration:

Witnesses:

Printed Name: Jamie Miller

Printed Name: Matt Jones

CITY OF PORT ORANGE

By: _____
Donald O. Burnette, Mayor

Date: 1/18/2022

STATE OF FLORIDA
COUNTY OF VOLUSIA

The foregoing instrument was acknowledged before me by means of ✓ physical presence or ___ online notarization, this 18 day of Jan., 2022, by Donald O. Burnette, as Mayor of the City of Port Orange, a Florida municipal corporation, on behalf of the city. He is ✓ personally known or ___ produced _____ as identification.

MATTHEW J. JONES
Commission # GG 931831
Expires January 23, 2024
Bonded Thru Troy Fain Insurance 800-385-7019

_____
Notary Public, State of Florida
Printed, typed or stamped name, commission and expiration:

Witnesses:

Printed Name: Jamie Miller

Printed Name: Matt Jones

ATTEST:

By: _____
Robin L. Fenwick, MMC, City Clerk

Date: 1/18/2022

STATE OF FLORIDA
COUNTY OF VOLUSIA

The foregoing instrument was acknowledged before me, by means of ✓ physical presence or ___ online notarization, this 18 day of Jan., 2022, by Robin L. Fenwick, as City Clerk of the City of Port Orange, a Florida municipal corporation, on behalf of the city. She is ✓ personally known or ___ produced _____ as identification.

MATTHEW J. JONES
Commission # GG 931831
Expires January 23, 2024
Bonded Thru Troy Fain Insurance 800-385-7019

_____
Notary Public, State of Florida
Printed, typed or stamped name, commission and expiration:

EXHIBIT "1"

Engineer's Billing Rate Schedule and RFSQ 21-03 Section 3

Consisting of 2 Pages

ZEVCOHEN
& ASSOCIATES INC

300 Interchange Blvd., Suite C
Ormond Beach, FL 32174
386-677-2482 • Fax: 386-677-2505
www.ZevCohen.com

2021 Hourly Rate Schedule

Principal	$190.00
Department Director	$175.00
Senior Professional Engineer	$155.00
Senior Registered Landscape Architect	$150.00
Project Manager	$155.00
Senior Planner	$140.00
Senior Biologist/Env. Scientist/GIS Analyst	$140.00
Professional Engineer	$140.00
Registered Landscape Architect	$135.00
Environmental Scientist II/GIS Specialist II	$105.00
Engineer II	$110.00
Landscape Architect II	$105.00
Planner II	$105.00
Senior Designer	$100.00
Environmental Scientist I/GIS Specialist I	$ 95.00
Engineer I	$ 95.00
Landscape Architect I	$ 95.00
Planner I	$ 95.00
Designer	$ 85.00
CADD Manager	$110.00
Senior CADD Technician	$100.00
CADD Technician	$ 90.00
Construction Administration Manager	$130.00
Construction Administrator	$110.00
Construction Administration Technician	$ 90.00
IT Manager	$ 95.00
Certified Soil Scientist	$155.00
Certified Arborist	$100.00
Landscape Designer	$ 85.00
Engineering Technician	$ 75.00
Biological Technician	$ 65.00
Technical Assistant	$ 65.00
Senior Clerical	$ 60.00
Clerical	$ 50.00

SECTION 3 – SCOPE OF SERVICES AND REQUIREMENTS

SCOPE OF SERVICES

The City of Port Orange is soliciting proposals from qualified firms for professional continuous engineering consulting services to complete a wide range of needs lead by the City of Port Orange Public Works & Utilities Department. The City will select a minimum of three, and up to five firms who can provide all, some, or one of the category service disciplines outlined in the scope of services. Firms do not have to be able to provide all of the services listed in the scope of services. For instance, if a firm only provides Environmental Services then they should state that in their initial Statement and provide all of the supporting data within the submittal to support the type of services provided. Individual firms are the focus of this RFSQ process, therefore the City will not accept Statements of Qualifications submitted with multiple firms (i.e., teams). The City is seeking the most highly qualified firms in the following category service disciplines;

- **Public Utilities (Water, Wastewater, & Reclaimed Water):**
  - Analysis, survey, design, permitting, bidding assistance, engineering services during construction, and State Revolving Funds (SRF) loan assistance for the Cities water, wastewater, and reuse systems. Including but not limited to the Cities wastewater collection and treatment systems, raw water wells, raw water transmission, water treatment, and reclaimed water storage and distribution systems
- **Public Works (Stormwater, Roadways, and Sidewalls/Trails):**
  - Analysis, survey, design, permitting, bidding assistance and engineering during construction for the Cities roadways and sidewalks
  - General stormwater needs as required by the Stormwater Utility Program. The list of services shall consist of, but not be limited to, the following:
  - National Pollutant Discharge Elimination System (NPDES) program assistance and implementation,
  - Total Maximum Daily Load (TMDL) program assistance and implementation including, but not limited to, the evaluation and establishment of estuarine TMDLS and NNC, developing ecosystem goals and targets based on the requirements of the environmental and biological indicators, hydrodynamic modeling, water quality statistical analysis, natural systems analysis and habitat analysis,
  - Watershed management planning including, but not limited to, initial hydrologic and hydraulic modeling of the watersheds in Port Orange, as well as pollutant loading modeling and updates to existing Stormwater Management Master Plans of the watersheds,
  - Engineering analysis/design and permitting of capital improvement projects, and
  - Other stormwater/environmental needs that may arise.
- **Environmental Services:**
  - Provide services related to wetlands mitigation bank management, gopher tortoise mitigation bank management, potable drinking water Consumptive Use Permit (CUP) permit monitoring, reporting, and compliance assistance, hydrologic services related to potable water wellfield management and development
  - Monitoring, sampling, and reporting services as required for permits issued and regulated by various local and State agencies such as Consumptive Use Permitting and other operational permits issued to the City by St. Johns River Water Management, U.S. Army Corps of Engineers, and the Florida Department of Environmental Protection for the operation of the Cities Wetlands Mitigation Bank, Gopher Tortoise Mitigation Bank each have very specific and differing water sampling, monitoring, and reporting procedures and requirements.
- **Grant Compliance Assistance:**
  - Provide Grant Compliance assistance for local, state, and federally administered grants, including but not limited to, HUD Community Development Block Grants, FEMA Hazard Mitigation Grant Program, FDEP Legislative Appropriation grants. Services will include tasks such as; Assistance with U.S. Department of Housing and Urban Development Environmental Review Record Development for projects funded with Community Development Block Grant Funds. Reviewing, monitoring, evaluating and acting upon documentation required for Construction Contract compliance.

[End of Scope of Services - Remainder of this page left intentionally blank]

EXHIBIT "2"

Task Authorization Template

Consisting of 4 Pages

TASK AUTHORIZATION NO. ___
Master Contract for Services dated _____
Between the City of Port Orange, Florida and Zev Cohen and Associates, Inc.

THIS Task Authorization is entered into by and between the **CITY OF PORT ORANGE, FLORIDA**, a chartered municipal corporation with its principal place of business at 1000 City Center Circle, Port Orange, Florida 32129 (the "City") and **ZEV COHEN AND ASSOCIATES, INC.**, Florida corporation, with its principal place of business at 300 Interchange Boulevard, Suite C, Ormond Beach, Florida 32174 ("Engineer"), and hereinafter collectively referred to as the "Parties," and is to that certain Master Contract relating to Professional Engineering Services for Public Works, Utilities and Environmental Services, as dated above, and any amendments thereto, hereinafter collectively referred to as the "Contract." The Parties, in exchange for the mutual covenants contained herein and in the Contract, agree as follows:

1. This Task Authorization expressly modifies the Contract and in the event of a conflict, the terms and conditions of this Task Authorization shall prevail.

2. In addition to all other terms and conditions contained in the Contract, Engineer shall provide services relating to _____, as more particularly described in the Scope of Services attached hereto and incorporated herein as Task Authorization Exhibit "1."

3. Engineer shall complete the services to be provided herein within _____ days of the date of written notice by the City to the Engineer.

4. In return for the services identified above, the City agrees to compensate Engineer at the prices set forth in Exhibit "1" attached hereto and made a part hereof, subject to a limit not to exceed $_____. All payments shall be governed by the Local Government Prompt Payment Act as Set forth in Sections 218.70 through 218.79, Florida Statutes, as amended.

5. *Truth-in-Negotiations*

(a) For any fixed fee, cost-plus-a-fixed-fee or guaranteed maximum-not-to-exceed compensation professional service contract or compensation in a Task Authorization over $150,000.00, Engineer shall execute a truth-in-negotiation certificate stating that wage rates and other factual unit costs supporting the compensation are accurate, complete, and current at the time of contracting. Any professional service contract or Task Authorization under which such certificate is required must contain a provision that the original contract price or compensation and any additions thereto will be adjusted to exclude any significant sums by which the City determines the contract price or compensation was increased due to inaccurate, incomplete, or noncurrent wage rates and other factual unit costs. All such contract or compensation adjustments must be made within one (1) year following the end of the Contract. Otherwise, such adjustments shall be deemed waived by the Engineer and null and void for the purposes of this Contract or Task Authorization. The signature on this Contract by the Engineer shall act as the execution of a truth- in-negotiation certificate stating that the wage rates and other factual unit costs supporting the compensation of this Contract are accurate, complete, and current at the time of contracting.

(b) Engineer's signature on this Contract or a Task Authorization shall act as execution of a truth-in-negotiation certificate stating that wage rates and other factual unit costs supporting the compensation set forth in this Contract or a Task Authorization are accurate, complete, and currentat the time of contract. The certification shall also constitute an affirmation that Engineer has disclosed all debts or fees owed to or that are pending before the City prior to the execution of this Contract of Task Authorization

6. This Task Authorization may be executed in one or more counterparts, each of which shall be deemed to be an original but all of which together shall constitute one and the same instrument. The delivery by facsimile or e-mail of an executed copy of this Task Authorization shall be deemed valid as if an original signature was delivered. No contract shall be formed between the Engineer and the City until the City signs this Task Authorization.

IN WITNESS WHEREOF, the Parties have made and executed this Task Authorization for the purposes herein expressed on the dates set forth below.

Witnesses:

ZEV COHEN AND ASSOCIATES, INC.

_____

Printed Name:_____

By:_____
M. Dwight Durant, Director

_____

Printed Name:_____

Date:_____

Witnesses:

CITY OF PORT ORANGE

_____

Printed Name:_____

By:_____
Donald Burnette, Mayor ***or***
Wayne Clark, City Manager

_____

Printed Name:_____

Date:_____

Witnesses:

ATTEST:

_____

Printed Name:_____

By:_____
Robin L. Fenwick, MMC, City Clerk

_____

Printed Name:_____

Date:_____

ZEVCOHE-01 LHAMPTON

CERTIFICATE OF LIABILITY INSURANCE

DATE (MM/DD/YYYY) 11/14/2024

THIS CERTIFICATE IS ISSUED AS A MATTER OF INFORMATION ONLY AND CONFERS NO RIGHTS UPON THE CERTIFICATE HOLDER. THIS CERTIFICATE DOES NOT AFFIRMATIVELY OR NEGATIVELY AMEND, EXTEND OR ALTER THE COVERAGE AFFORDED BY THE POLICIES BELOW. THIS CERTIFICATE OF INSURANCE DOES NOT CONSTITUTE A CONTRACT BETWEEN THE ISSUING INSURER(S), AUTHORIZED REPRESENTATIVE OR PRODUCER, AND THE CERTIFICATE HOLDER.

IMPORTANT: If the certificate holder is an ADDITIONAL INSURED, the policy(ies) must have ADDITIONAL INSURED provisions or be endorsed. If SUBROGATION IS WAIVED, subject to the terms and conditions of the policy, certain policies may require an endorsement. A statement on this certificate does not confer rights to the certificate holder in lieu of such endorsement(s).

PRODUCER JCJ Insurance Agency, LLC 2208 Hillcrest Street Orlando, FL 32803	CONTACT NAME: PHONE (A/C, No, Ext): (321) 445-1117 FAX (A/C, No): (321) 445-1076 E-MAIL ADDRESS: certs@jcj-insurance.com
INSURED Zev Cohen & Associates Inc. 300 Interchange Blvd. Suite C Ormond Beach, FL 32174	INSURER(S) AFFORDING COVERAGE — NAIC # INSURER A : Travelers Property & Casualty of America — 25674 INSURER B : Phoenix Insurance Co. (Travelers) — 25623 INSURER C : Travelers Casualty & Surety Co — 19038 INSURER D : Arch Insurance Company — 11150 INSURER E : INSURER F :

COVERAGES **CERTIFICATE NUMBER:** **REVISION NUMBER:**

THIS IS TO CERTIFY THAT THE POLICIES OF INSURANCE LISTED BELOW HAVE BEEN ISSUED TO THE INSURED NAMED ABOVE FOR THE POLICY PERIOD INDICATED. NOTWITHSTANDING ANY REQUIREMENT, TERM OR CONDITION OF ANY CONTRACT OR OTHER DOCUMENT WITH RESPECT TO WHICH THIS CERTIFICATE MAY BE ISSUED OR MAY PERTAIN, THE INSURANCE AFFORDED BY THE POLICIES DESCRIBED HEREIN IS SUBJECT TO ALL THE TERMS, EXCLUSIONS AND CONDITIONS OF SUCH POLICIES. LIMITS SHOWN MAY HAVE BEEN REDUCED BY PAID CLAIMS.

INSR LTR	TYPE OF INSURANCE	ADDL INSD	SUBR WVD	POLICY NUMBER	POLICY EFF (MM/DD/YYYY)	POLICY EXP (MM/DD/YYYY)	LIMITS	
A	X COMMERCIAL GENERAL LIABILITY CLAIMS-MADE [X] OCCUR GEN'L AGGREGATE LIMIT APPLIES PER: POLICY [X] PRO-JECT [ ] LOC OTHER:	X		6602P382574	11/21/2024	11/21/2025	EACH OCCURRENCE DAMAGE TO RENTED PREMISES (Ea occurrence) MED EXP (Any one person) PERSONAL & ADV INJURY GENERAL AGGREGATE PRODUCTS - COMP/OP AGG	$ 1,000,000 $ 1,000,000 $ 5,000 $ 1,000,000 $ 2,000,000 $ 2,000,000
B	AUTOMOBILE LIABILITY X ANY AUTO OWNED AUTOS ONLY / SCHEDULED AUTOS HIRED AUTOS ONLY / NON-OWNED AUTOS ONLY	X		BA1R863945	11/21/2024	11/21/2025	COMBINED SINGLE LIMIT (Ea accident) BODILY INJURY (Per person) BODILY INJURY (Per accident) PROPERTY DAMAGE (Per accident)	$ 1,000,000 $ $ $
A	X UMBRELLA LIAB [X] OCCUR EXCESS LIAB [ ] CLAIMS-MADE DED [X] RETENTION $ 10,000			CUP2P385607	11/21/2024	11/21/2025	EACH OCCURRENCE AGGREGATE	$ 2,000,000 $ 2,000,000
C	WORKERS COMPENSATION AND EMPLOYERS' LIABILITY ANY PROPRIETOR/PARTNER/EXECUTIVE OFFICER/MEMBER EXCLUDED? Y/N [ ] (Mandatory in NH) If yes, describe under DESCRIPTION OF OPERATIONS below	N/A	X	UB7S340867	11/21/2024	11/21/2025	X PER STATUTE / OTH-ER E.L. EACH ACCIDENT E.L. DISEASE - EA EMPLOYEE E.L. DISEASE - POLICY LIMIT	$ 1,000,000 $ 1,000,000 $ 1,000,000
D	Professional Liab			PAAEP0163000	11/21/2024	11/21/2025	Per Claim/Aggregate	2,000,000

DESCRIPTION OF OPERATIONS / LOCATIONS / VEHICLES (ACORD 101, Additional Remarks Schedule, may be attached if more space is required)
RE: RFSQ 21-03 "Professional Engineering Services." Certificate Holder is an Additional Insureds with regards to General & Auto Liability when required by written contract. A Waiver of Subrogation applies to Workers Compensation when required by written contract.

CERTIFICATE HOLDER

City of Port Orange
1000 City Center Circle
Port Orange, FL 32129

CANCELLATION

SHOULD ANY OF THE ABOVE DESCRIBED POLICIES BE CANCELLED BEFORE THE EXPIRATION DATE THEREOF, NOTICE WILL BE DELIVERED IN ACCORDANCE WITH THE POLICY PROVISIONS.

AUTHORIZED REPRESENTATIVE
Erin K. Kelley

© 1988-2015 ACORD CORPORATION. All rights reserved.
The ACORD name and logo are registered marks of ACORD

CITY COUNCIL AGENDA ITEM

COUNCIL MEETING DATE 8/19/2025

SUBJECT: (B6d) Approval of Task Authorization No. 11 with Mead & Hunt for Wellfield Consumptive Use Permit (CUP) and Reclaimed Lakes Monitoring

DEPARTMENT: Public Utilities

GOAL: 2 - Infrastructure 3 - Quality of Life 6 - Organizational Excellence

RECOMMENDED MOTION: Move to approve Task Authorization No. 11 with Mead & Hunt for compliance monitoring of the City wellfields, pursuant to Consumptive Use Permit No. 8595-7 and authorize the Mayor and City Clerk to sign all necessary documents.

SUMMARY: Monitoring is required for compliance with the operational permits issued to the City of Port Orange ("City") by the St. Johns River Water Management District ("District"). This includes the Consumptive Use Permit #8595-7 (CUP) and the District's Permit #86929-4.

As a condition of the City's CUP and the District's permit, the City is required to monitor the wetlands and the reclaimed lakes in the Wellfield areas. The City has consistently been able to demonstrate to the District our outstanding stewardship and management of groundwater. This has resulted in the issuance of a 20-year CUP by the District.

The scope of services requested in this Task Authorization provides for the requisite monitoring of both the wetlands and the reclaimed lakes, pursuant to the above-referenced permits. This Task Authorization is in conformance with the Master Contract for Engineering Services pursuant to RFSQ #21-03 for Public Works, Utilities, and Environmental Services. The term for this Task Authorization is for 365 days.

PRESENTER: Steve Parnell

ATTACHMENTS:

1.	Mead and Hunt Inc. Task Authorization No. 11 CUP Monitoring	Mead and Hunt Inc. Task Authorization No. 11 CUP Monitoring.pdf
2.	PO 2025 Wellfield CUP and Reclaimed Lakes Monitoring Proposal 061025	PO 2025 Wellfield CUP and Reclaimed Lakes Monitoring Proposal 061025.pdf

Steve Parnell Created/Initiated - 07/30/2025

Christopher Wall	Approved - 07/31/2025
Steve Parnell	Approved - 08/07/2025
Linda Truitt	Approved - 08/08/2025
Matthew Jones	Approved - 08/08/2025
Wayne Clark	Final Approval - 08/11/2025

TASK AUTHORIZATION NO. 11
Master Contract for Professional Engineering Services for
Public Works, Utilities and Environmental Services
dated January 18, 2022,
Between the City of Port Orange, Florida and Mead and Hunt, Inc.

THIS Task Authorization is entered into by and between the **CITY OF PORT ORANGE, FLORIDA**, a chartered municipal corporation with its principal place of business at 1000 City Center Circle, Port Orange, Florida 32129 (the "City") and **Mead and Hunt, INC.**, Florida corporation, with its principal place of business at 2440 Deming Way, Middleton, Wisconsin 53562-1562 ("Engineer"), and hereinafter collectively referred to as the "Parties," and is to that certain Master Contract relating to Professional Engineering Services for Public Works, Utilities and Environmental Services, as dated above, and any amendments thereto, hereinafter collectively referred to as the "Contract." The Parties, in exchange for the mutual covenants contained herein and in the Contract, agree as follows:

1. This Task Authorization expressly modifies the Contract and in the event of a conflict, the terms and conditions of this Task Authorization shall prevail.

2. In addition to all other terms and conditions contained in the Contract, Engineer shall provide Wellfield Consumptive Use Permit (CUP) and Reclaimed Lakes Monitoring, and as more particularly described in the Scope of Services attached hereto and incorporated herein as **Task Authorization Exhibit "1."**

3. Engineer shall complete the services to be provided herein and the Compliance Plan shall be completed no later than 365 days from the date of issuance of a written Notice to Proceed by the City to the Engineer.

4. In return for the services identified above, the City agrees to compensate Engineer at the prices set forth in Exhibit "1," attached hereto and made a part hereof, subject to a limit not to exceed **$45,835.00.** All payments shall be governed by the Local Government Prompt Payment Act as Set forth in Sections 218.70 through 218.79, Florida Statutes, as amended.

5. *Truth-in-Negotiations*

(a) For any fixed fee, cost-plus-a-fixed-fee or guaranteed maximum-not-to-exceed compensation professional service contract or compensation in a Task Authorization over $150,000.00, Engineer shall execute a truth-in-negotiation certificate stating that wage rates and other factual unit costs supporting the compensation are accurate, complete, and current at the time of contracting. Any professional service contract or Task Authorization under which such certificate is required must contain a provision that the original contract price or compensation and any additions thereto will be adjusted to exclude any significant sums by which the City determines the contract price or compensation was increased due to inaccurate, incomplete, or noncurrent wage rates and other factual unit costs. All such contract or compensation adjustments must be made within one (1) year following the end of the Contract. Otherwise, such adjustments shall be deemed waived by the Engineer and null and void for the purposes of this Contract or Task Authorization. The signature on this Contract by the Engineer shall act as the execution of a truth- in-negotiation certificate stating that the wage rates and other factual unit costs supporting the compensation of this Contract are accurate, complete, and current at the time of contracting.

(b) Engineer's signature on this Contract or a Task Authorization shall act as execution of a truth-in-negotiation certificate stating that wage rates and other factual unit costs supporting the compensation set forth in this Contract or a Task Authorization are accurate, complete, and current at the time of contract. The certification shall also constitute an affirmation that Engineer has disclosed all debts or fees owed to or that are pending before the City prior to the execution of this Contract of Task Authorization.

6. This Task Authorization may be executed in one or more counterparts, each of which shall be deemed to be an original but all of which together shall constitute one and the same instrument. The delivery by facsimile or e-mail of an executed copy of this Task Authorization shall be deemed valid as if an original signature was delivered. No contract shall be formed between the Engineer and the City until the City signs this Task Authorization.

IN WITNESS WHEREOF, the Parties have made and executed this Task Authorization for the purposes herein expressed on the dates set forth below.

Witnesses:

MEAD AND HUNT, INC.

_____ By: _____

Printed Name: _____ Brad Blais, Vice President

_____ Date: _____

Printed Name: _____

Please note that at this time the City does not accept electronic/digital signatures. A wet signature is required for this document.

CITY OF PORT ORANGE

By:_____
Scott Stiltner, Mayor

Date:_____

ATTEST:

By:_____
Robin L. Fenwick, MMC, City Clerk

Date:_____

EXHIBIT "1"

Engineer's Proposal

Consisting of 8 Pages

June 10, 2025

Steve Parnell
Public Utility Director
City of Port Orange
1000 City Center Circle
Port Orange, FL 32129

Email: sparnell@port-orange.org

Subject: Port Orange 2025 Wellfield Consumptive Use Permit (CUP) and Reclaimed Lakes Monitoring

Dear Mr. Parnell,

Our firm is pleased to present the enclosed proposal for professional services associated with environmental monitoring and reporting services required for compliance with the City's Consumptive Use Permit 8597-7 and compliance with SJRWMD Permit 86929-4. Thank you for this opportunity to continue to be of service.

Sincerely,
MEAD & HUNT, Inc.

Brad T. Blais, P.E.
Vice President/Market Leader

Cassandra "Casey" Cissell, P.E. ENV SP
Project Manager

BTB/CMC; cc

Enclosure Scope of Services
Biological Consulting Services Inc. Port Orange Reclaimed Lakes Monitoring Proposal
Biological Consulting Services Inc. Port Orange Wellfield CUP – Baseline Wetlands Monitoring Proposal

CITY OF PORT ORANGE
SCOPE OF SERVICES
FOR
2025 WELLFIELD CUP AND RECLAIMED LAKES MONITORING

This Task Order is in conformance with the Master Contract for Engineering Services, pursuant to RFSQ #21-03, Professional Engineering Services for Public Works, Utilities, and Environmental Services dated January 28, 2022, between the City of Port Orange (OWNER) and Mead & Hunt, Inc. (MEAD & HUNT) and is referred to herein as the Contract.

GENERAL
As a requirement of the City of Port Orange's Consumptive Use Permit (CUP 8597-7), the City is required to monitor the wetlands at the City's wellfield. Additionally, as a requirement of St. Johns River Water Management District Permit 86929-4, the City is required to monitor the Reclaimed Lakes.

SCOPE OF SERVICES
After receipt of authorization to proceed, MEAD & HUNT will provide the following services:

PHASE 1 – PROJECT MANAGEMENT

Project Coordination
MEAD & HUNT'S Project Manager (PM) will monitor and manage the project budget, schedule, and scope throughout the estimated 12-month project duration. The PM will manage the development of project work and subconsultant efforts.

PHASE 2 – SUBCONSULTANTS AND REIMBURSABLES

Items under this phase include out-of-pocket direct job expenses such as subconsultants, reproductions, postage, etc. Items included in this phase will be billed at actual cost plus 15%.

Monitoring and Reporting – Wetlands monitoring and reporting to be performed by Biological Consulting Services, Inc. The scope of work included is detailed in their proposals and are included herein.

EXCLUSIONS
This scope of services excludes all items not specifically described herein.

SCHEDULE
Mead & Hunt estimates the work included in this task order will be completed in accordance with the following schedule:

Phase/Task	Duration to Complete (calendar days)	Commencing Upon
Phase 1 – Project Management	*365 days*	*Receipt of notice to proceed*

COMPENSATION

The not-to-exceed cost for this Scope of Services is $45,835.

The above fee is based on the following breakdown:

Phase/Task	Fee/Cost	Basis
Phase 1 – Project Management	*$8,000*	*Lump Sum*
Subtotal	***$8,000***	
Phase 2 – Subconsultants/Reimbursables		
Task 1 – Biological Consulting Services, Inc – Wetland CUP Monitoring	*$28,750*	*Actual cost plus 15%*
Task 2 – Biological Consulting Services, Inc – Reclaimed Lake Monitoring	*$9,085*	*Actual cost plus 15%*
Subtotal	***$37,835***	
TOTAL	***$45,835***	

Authorization
The Scope of Services and Compensation stated in this proposal are valid for a period of thirty (30) days from date of submission. If authorization to proceed is not received during this period, this proposal may be withdrawn or modified by Mead & Hunt.

Signatures of authorized representatives of the City of Port Orange and Mead & Hunt shall convert this proposal to an Agreement between the two parties, and receipt of one signed copy shall be considered authorization to proceed with the work described in the Scope of Services.

MEAD AND HUNT, INC.		Approved by: MEAD AND HUNT, INC.	
By:	Cassandra Cissell	By:	
	Author/Submitter		*Authorized Signer Review*
Name:	Cassandra “Casey” Cissell, PE	Name:	Brad T. Blais, PE
Title:	Department Manager	Title:	Vice President/Market Leader
Date:	6-6-2025	Date:	6-6-2025

Accepted by: CITY OF PORT ORANGE

By: _____

The above person is authorized to sign for the Owner and bind the Owner to the terms hereof.

Name: See Page 4 of COPO Task Authorization No. 11

Title: _____

Date: _____

PURSUANT TO FLORIDA STATUTE SECTION 558.0035, AN INDIVIDUAL EMPLOYEE OR AGENT OF MEAD & HUNT INC. MAY NOT BE HELD INDIVIDUALLY LIABLE FOR NEGLIGENCE.

IF THE CONTRACTOR (MEAD & HUNT, INC.) HAS QUESTIONS REGARDING THE APPLICATION OF CHAPTER 119, FLORIDA STATUTES, TO THE CONTRACTOR’S (MEAD & HUNT, INC.’s) DUTY TO PROVIDE PUBLIC RECORDS RELATING TO THIS CONTRACT (PROPOSAL), CONTACT THE CUSTODIAN OF PUBLIC RECORDS AT CITY HALL, CITY OF PORT ORANGE, 1000 CITY CENTER CIRCLE, PORT ORANGE, FL 32129 City Clerk, Robin Fenwick, (386) 506-5566, rfenwick@port-orange.org

BIOLOGICAL CONSULTING SERVICES, INC.

May 23, 2025

Ms. Cassandra Cissell, PE
Mead & Hunt
4401 Eastport Parkway
Port Orange, Florida 32127
Cassandra.cissell@meadhunt.com

Project: Port Orange Wellfield CUP – Baseline Wetlands Monitoring per CUP 8597-7

Dear Casey,

I have attached a Scope of Services for your review and preparation of a Work Order for the Baseline Wetlands Monitoring required by the Port Orange Wellfield CUP 8597-7 for the above referenced project.

If you should have any questions or concerns, please feel free to contact me.

Sincerely,

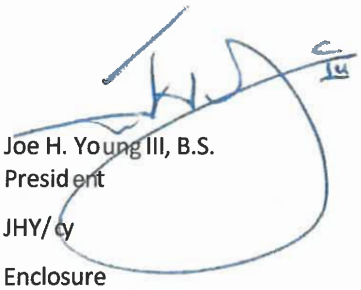

Joe H. Young III, B.S.
President

JHY/cy

Enclosure

xc: David King PE
File

802 Magnolia Street • New Smyrna Beach, FL 32168 • 386-423-3402
Web: biologicalconsultingservices.com • Email: biocon@bellsouth.net

SCOPE OF WORK

BCS's scope of work for providing wetlands monitoring to Mead & Hunt Inc. for the Port Orange Wellfield shall include the following tasks as outlined below:

1.0 Quarterly Water Level Monitoring

1.1 Conduct four (4) quarterly reviews to download data from the water level data loggers at each of the monitoring stations.

1.2 Conduct two (2) semi-annual maintenance events during the 1st and 3rd quarters to inspect loggers, change batteries, clean probes.

1.3 Prepare two (2) semiannual water level data reports for submittal to the St. Johns River Water Management District (SJRWMD).

2.0 Data Logger Repair/Replacement - Four (4) Stations

2.1 BCS staff will remove data logger from monitoring station if not working correctly and ship to manufacturer for inspection and repair. **Repair/refurbishment costs and new data logger purchase costs are not included.** The City of Port Orange will be responsible for payment to the manufacturer for the repair or refurbishment costs. BCS will provide coordination with the manufacturer and City staff for the repair/refurbishment.

2.2 BCS will install a temporary data logger (if available) at the monitoring station for continued water level data collection.

2.3 BCS will test the repaired data logger in house prior to installation in the field. BCS will install the repaired water level data logger.

3.0 Baseline Monitoring – New CUP Monitoring Protocol

3.1 BCS will conduct the Baseline Monitoring per the Wetland Monitoring Plan submitted to the District on December 8, 2022. BCS staff will coordinate with the project surveyor for the survey work required by the monitoring plan. **BCS does not provide boundary or other land survey; therefore, survey costs are not included in this scope.**

This agreement does not include costs for new surficial aquifer ground water monitoring wells or installation at new locations at Stations PO-7 and PO-8.

DELIVERABLES

BCS shall provide copies of all correspondence and exhibits produced in the above scope of work to Mead & Hunt.

COMPENSATION

Compensation for all services, material, supplies, any other items, or requirements necessary to complete the work as described herein, except as noted, shall be for a fixed fee grand total amount of **TWENTY-FIVE THOUSAND DOLLARS and 00/100 ($25,000.00).**

TASK 1: $4,400.00
TASK 2: $2,400.00
TASK 3: $18,200.00

BIOLOGICAL CONSULTING SERVICES, INC.

May 23, 2025

Ms. Cassandra Cissell, PE
Mead & Hunt
4401 Eastport Parkway
Port Orange, Florida 32127
Cassandra.cissell@meadhunt.com

Project: Port Orange Reclaimed Lakes Monitoring to satisfy SJRWMD Permit 86929-4

Dear Casey,

I have attached a Scope of Services for your review and preparation of a Work Order for the monitoring required by SJRWMD Permit 86929-4 for the above referenced project.

If you should have any questions or concerns, please feel free to contact me.

Sincerely,

Joe H. Young III, B.S.
President

JHY/cy

Enclosure

xc: David King, PE
File

802 Magnolia Street • New Smyrna Beach, FL 32168 • 386-423-3402
Web: biologicalconsultingservices.com • Email: biocon@bellsouth.net

SCOPE OF WORK

BCS's scope of work for providing wetlands monitoring for the Port Orange Reclaimed Lakes shall include the following tasks as outlined below:

1.0 Quarterly Water Level Monitoring

1.1 Conduct four (4) quarterly reviews to download data from the water level data loggers at each of the monitoring stations.

1.2 Conduct two (2) semi-annual maintenance events during the 1st and 3rd quarters to inspect loggers, change batteries, clean probes.

1.3 Prepare two (2) semiannual water level data reports for submittal to the St. Johns River Water Management District (SJRWMD).

2.0 Data Logger Repair/Replacement - Four (4) Stations

2.1 BCS staff will remove data logger from a monitoring station if not working correctly and ship to manufacturer for inspection and repair. **Repair/refurbishment costs and new data logger purchase costs are not included.** The City of Port Orange will be responsible for payment to the manufacturer for the repair and refurbishment costs and/or cost of new data logger. BCS will provide coordination with the manufacturer and City staff.

2.2 BCS will install a temporary data logger (if available) at the monitoring station for continued water level data collection.

2.3 BCS will test the repaired data logger in house prior to installation in the field. BCS will install the repaired water level data logger.

DELIVERABLES

BCS shall provide copies of all correspondence and exhibits produced in the above scope of work to Mead & Hunt.

COMPENSATION

Compensation for all services, material, supplies, any other items, or requirements necessary to complete the work as described herein, except as noted, shall be for a fixed fee grand total amount of **SEVEN THOUSAND NINE HUNDRED DOLLARS and 00/100 ($7,900.00).**

Task 1: Monitoring/Reporting: $5,500.00

Task 1.1: $3,600.00 ($900.00/event)
Task 1.2: $1,200.00 ($600.00/semi-annual event)
Task 1.3: $700.00 ($350.00/semi-annual submittal)

Task 2: Data Logger Refurbishment: $2,400.00 ($600.00/event)

June 10, 2025

Steve Parnell
Public Utility Director
City of Port Orange
1000 City Center Circle
Port Orange, FL 32129

Email: sparnell@port-orange.org

Subject: Port Orange 2025 Wellfield Consumptive Use Permit (CUP) and Reclaimed Lakes Monitoring

Dear Mr. Parnell,

Our firm is pleased to present the enclosed proposal for professional services associated with environmental monitoring and reporting services required for compliance with the City's Consumptive Use Permit 8597-7 and compliance with SJRWMD Permit 86929-4. Thank you for this opportunity to continue to be of service.

Sincerely,
MEAD & HUNT, Inc.

Brad T. Blais, P.E.
Vice President/Market Leader

Cassandra "Casey" Cissell, P.E. ENV SP
Project Manager

BTB/CMC; cc

Enclosure Scope of Services
Biological Consulting Services Inc. Port Orange Reclaimed Lakes Monitoring Proposal
Biological Consulting Services Inc. Port Orange Wellfield CUP – Baseline Wetlands Monitoring Proposal

CITY OF PORT ORANGE
SCOPE OF SERVICES
FOR
2025 WELLFIELD CUP AND RECLAIMED LAKES MONITORING

This Task Order is in conformance with the Master Contract for Engineering Services, pursuant to RFSQ #21-03, Professional Engineering Services for Public Works, Utilities, and Environmental Services dated January 28, 2022, between the City of Port Orange (OWNER) and Mead & Hunt, Inc. (MEAD & HUNT) and is referred to herein as the Contract.

GENERAL
As a requirement of the City of Port Orange's Consumptive Use Permit (CUP 8597-7), the City is required to monitor the wetlands at the City's wellfield. Additionally, as a requirement of St. Johns River Water Management District Permit 86929-4, the City is required to monitor the Reclaimed Lakes.

SCOPE OF SERVICES
After receipt of authorization to proceed, MEAD & HUNT will provide the following services:

PHASE 1 – PROJECT MANAGEMENT

Project Coordination
MEAD & HUNT'S Project Manager (PM) will monitor and manage the project budget, schedule, and scope throughout the estimated 12-month project duration. The PM will manage the development of project work and subconsultant efforts.

PHASE 2 – SUBCONSULTANTS AND REIMBURSABLES

Items under this phase include out-of-pocket direct job expenses such as subconsultants, reproductions, postage, etc. Items included in this phase will be billed at actual cost plus 15%.

Monitoring and Reporting – Wetlands monitoring and reporting to be performed by Biological Consulting Services, Inc. The scope of work included is detailed in their proposals and are included herein.

EXCLUSIONS
This scope of services excludes all items not specifically described herein.

SCHEDULE
Mead & Hunt estimates the work included in this task order will be completed in accordance with the following schedule:

Phase/Task	Duration to Complete (calendar days)	Commencing Upon
Phase 1 – Project Management	*365 days*	*Receipt of notice to proceed*

COMPENSATION

The not-to-exceed cost for this Scope of Services is $45,835.

The above fee is based on the following breakdown:

Phase/Task	Fee/Cost	Basis
Phase 1 – Project Management	*$8,000*	*Lump Sum*
Subtotal	***$8,000***	
Phase 2 – Subconsultants/Reimbursables		
Task 1 – Biological Consulting Services, Inc – Wetland CUP Monitoring	*$28,750*	*Actual cost plus 15%*
Task 2 – Biological Consulting Services, Inc – Reclaimed Lake Monitoring	*$9,085*	*Actual cost plus 15%*
Subtotal	***$37,835***	
TOTAL	***$45,835***	

Authorization
The Scope of Services and Compensation stated in this proposal are valid for a period of thirty (30) days from date of submission. If authorization to proceed is not received during this period, this proposal may be withdrawn or modified by Mead & Hunt.

Signatures of authorized representatives of the City of Port Orange and Mead & Hunt shall convert this proposal to an Agreement between the two parties, and receipt of one signed copy shall be considered authorization to proceed with the work described in the Scope of Services.

MEAD AND HUNT, INC.		Approved by: MEAD AND HUNT, INC.	
By:	Cassandra Cissell	By:	
	Author/Submitter		*Authorized Signer Review*
Name:	Cassandra “Casey” Cissell, PE	Name:	Brad T. Blais, PE
Title:	Department Manager	Title:	Vice President/Market Leader
Date:	6-6-2025	Date:	6-6-2025

Accepted by: CITY OF PORT ORANGE

By: _____

The above person is authorized to sign for the Owner and bind the Owner to the terms hereof.

Name: _____

Title: _____

Date: _____

PURSUANT TO FLORIDA STATUTE SECTION 558.0035, AN INDIVIDUAL EMPLOYEE OR AGENT OF MEAD & HUNT INC. MAY NOT BE HELD INDIVIDUALLY LIABLE FOR NEGLIGENCE.

IF THE CONTRACTOR (MEAD & HUNT, INC.) HAS QUESTIONS REGARDING THE APPLICATION OF CHAPTER 119, FLORIDA STATUTES, TO THE CONTRACTOR’S (MEAD & HUNT, INC.’s) DUTY TO PROVIDE PUBLIC RECORDS RELATING TO THIS CONTRACT (PROPOSAL), CONTACT THE CUSTODIAN OF PUBLIC RECORDS AT CITY HALL, CITY OF PORT ORANGE, 1000 CITY CENTER CIRCLE, PORT ORANGE, FL 32129 City Clerk, Robin Fenwick, (386) 506-5566, rfenwick@port-orange.org

BIOLOGICAL CONSULTING SERVICES, INC.

May 23, 2025

Ms. Cassandra Cissell, PE
Mead & Hunt
4401 Eastport Parkway
Port Orange, Florida 32127
Cassandra.cissell@meadhunt.com

Project: Port Orange Wellfield CUP – Baseline Wetlands Monitoring per CUP 8597-7

Dear Casey,

I have attached a Scope of Services for your review and preparation of a Work Order for the Baseline Wetlands Monitoring required by the Port Orange Wellfield CUP 8597-7 for the above referenced project.

If you should have any questions or concerns, please feel free to contact me.

Sincerely,

Joe H. Young III, B.S.
President

JHY/cy

Enclosure

xc: David King PE
File

802 Magnolia Street • New Smyrna Beach, FL 32168 • 386-423-3402
Web: biologicalconsultingservices.com • Email: biocon@bellsouth.net

SCOPE OF WORK

BCS's scope of work for providing wetlands monitoring to Mead & Hunt Inc. for the Port Orange Wellfield shall include the following tasks as outlined below:

1.0 Quarterly Water Level Monitoring

1.1 Conduct four (4) quarterly reviews to download data from the water level data loggers at each of the monitoring stations.

1.2 Conduct two (2) semi-annual maintenance events during the 1st and 3rd quarters to inspect loggers, change batteries, clean probes.

1.3 Prepare two (2) semiannual water level data reports for submittal to the St. Johns River Water Management District (SJRWMD).

2.0 Data Logger Repair/Replacement - Four (4) Stations

2.1 BCS staff will remove data logger from monitoring station if not working correctly and ship to manufacturer for inspection and repair. **Repair/refurbishment costs and new data logger purchase costs are not included**. The City of Port Orange will be responsible for payment to the manufacturer for the repair or refurbishment costs. BCS will provide coordination with the manufacturer and City staff for the repair/refurbishment.

2.2 BCS will install a temporary data logger (if available) at the monitoring station for continued water level data collection.

2.3 BCS will test the repaired data logger in house prior to installation in the field. BCS will install the repaired water level data logger.

3.0 Baseline Monitoring – New CUP Monitoring Protocol

3.1 BCS will conduct the Baseline Monitoring per the Wetland Monitoring Plan submitted to the District on December 8, 2022. BCS staff will coordinate with the project surveyor for the survey work required by the monitoring plan. **BCS does not provide boundary or other land survey; therefore, survey costs are not included in this scope.**

This agreement does not include costs for new surficial aquifer ground water monitoring wells or installation at new locations at Stations PO-7 and PO-8.

DELIVERABLES

BCS shall provide copies of all correspondence and exhibits produced in the above scope of work to Mead & Hunt.

COMPENSATION

Compensation for all services, material, supplies, any other items, or requirements necessary to complete the work as described herein, except as noted, shall be for a fixed fee grand total amount of **TWENTY-FIVE THOUSAND DOLLARS and 00/100 ($25,000.00).**

TASK 1: $4,400.00
TASK 2: $2,400.00
TASK 3: $18,200.00

BIOLOGICAL CONSULTING SERVICES, INC.

May 23, 2025

Ms. Cassandra Cissell, PE
Mead & Hunt
4401 Eastport Parkway
Port Orange, Florida 32127
Cassandra.cissell@meadhunt.com

Project: Port Orange Reclaimed Lakes Monitoring to satisfy SJRWMD Permit 86929-4

Dear Casey,

I have attached a Scope of Services for your review and preparation of a Work Order for the monitoring required by SJRWMD Permit 86929-4 for the above referenced project.

If you should have any questions or concerns, please feel free to contact me.

Sincerely,

Joe H. Young III, B.S.
President

JHY/cy

Enclosure

xc: David King, PE
File

802 Magnolia Street • New Smyrna Beach, FL 32168 • 386-423-3402
Web: biologicalconsultingservices.com • Email: biocon@bellsouth.net

SCOPE OF WORK

BCS's scope of work for providing wetlands monitoring for the Port Orange Reclaimed Lakes shall include the following tasks as outlined below:

1.0 Quarterly Water Level Monitoring

1.1 Conduct four (4) quarterly reviews to download data from the water level data loggers at each of the monitoring stations.

1.2 Conduct two (2) semi-annual maintenance events during the 1st and 3rd quarters to inspect loggers, change batteries, clean probes.

1.3 Prepare two (2) semiannual water level data reports for submittal to the St. Johns River Water Management District (SJRWMD).

2.0 Data Logger Repair/Replacement - Four (4) Stations

2.1 BCS staff will remove data logger from a monitoring station if not working correctly and ship to manufacturer for inspection and repair. **Repair/refurbishment costs and new data logger purchase costs are not included.** The City of Port Orange will be responsible for payment to the manufacturer for the repair and refurbishment costs and/or cost of new data logger. BCS will provide coordination with the manufacturer and City staff.

2.2 BCS will install a temporary data logger (if available) at the monitoring station for continued water level data collection.

2.3 BCS will test the repaired data logger in house prior to installation in the field. BCS will install the repaired water level data logger.

DELIVERABLES

BCS shall provide copies of all correspondence and exhibits produced in the above scope of work to Mead & Hunt.

COMPENSATION

Compensation for all services, material, supplies, any other items, or requirements necessary to complete the work as described herein, except as noted, shall be for a fixed fee grand total amount of **SEVEN THOUSAND NINE HUNDRED DOLLARS and 00/100 ($7,900.00).**

Task 1: Monitoring/Reporting: $5,500.00

Task 1.1: $3,600.00 ($900.00/event)
Task 1.2: $1,200.00 ($600.00/semi-annual event)
Task 1.3: $700.00 ($350.00/semi-annual submittal)

Task 2: Data Logger Refurbishment: $2,400.00 ($600.00/event)

CITY COUNCIL AGENDA ITEM

COUNCIL MEETING DATE 8/19/2025

SUBJECT: (B7) Approval of a Memorandum of Understanding (MOU) with the International Union of Police Associations (IUPA)

DEPARTMENT: Human Resources

GOAL: 1- Public Safety
5 - Fiscal Sustainability

RECOMMENDED MOTION: Motion to approve the Memorandum of Understanding (MOU) with the International Union of Police Associations (IUPA)

SUMMARY: The current International Union of Police Associations (IUPA) Collective Bargaining Agreement (CBA) is a three-year agreement that expires on 09/30/2026. This agreement contains a requirement for a re-opener on wages, and allows for one additional mutually agreed opener. In April 2025, staff opened negotiations on Article 28 - “Wages”, and Article 29 - "Retirement".

On July 18, 2025, the City received notification that IUPA members agreed to withdraw the proposal for retirement and they subsequently voted in favor of the negotiated Memorandum of Understanding (MOU) to the Collective Bargaining Agreement (CBA) that was tentatively agreed to by the City's bargaining team.

Below is a summary of changes to the wages article:

Article 28 - Wages

- Officers will be adjusted by a percentage between steps. For Steps 1-5, the distance between steps will be increased from 1.5% to 3.0%. For Steps 6-20, the distance between steps will be increased from 1.5% to 2.0%.
- For Sergeants, the start rate was increased to $35.00, and the distance between each step was increased to 2.0%, bringing the maximum rate for Sergeants to $42.66.
- School Resource Officer Incentive Pay - $75/pay period = $1,950/yr

Article 29 - Retirement
The Union agreed to withdraw their proposal and will present proposals during the next negotiation session which will commence in 2026 for a new full book contract beginning FY2027.

PRESENTER: Michelle Olk

ATTACHMENTS:

1.	SIGNED MOU IUPA - 08-11-2025	SIGNED MOU IUPA - 08-11-2025.pdf

Meghan Meyer	Created/Initiated - 07/30/2025
Michelle Olk	Approved - 08/05/2025
Linda Truitt	Approved - 08/05/2025
Matthew Jones	Approved - 08/12/2025
Wayne Clark	Final Approval - 08/12/2025

MEMORANDUM OF UNDERSTANDING
BETWEEN THE
CITY OF PORT ORANGE
AND THE
INTERNATIONAL UNION OF POLICE ASSOCIATIONS
PERC CERTIFICATION #1983

This Memorandum of Understanding ("MOU") is entered into between International Union of Police Associations Local 6051- PERC Certification #1983 ("Association") and the City of Port Orange ("City") herein collectively referred to as the "parties," to modify the provision of the 2023-2026 collective bargaining agreement ("Agreement"), as amended.

1. The Agreement was amended by an MOU on September 17, 2024, to revise Articles 5, 15, 19, 28, and 29 of the Agreement.

2. Upon execution by the parties, this MOU shall further amend the Agreement – specifically Sections 28.3 and 28.7 of the Agreement as delineated below.

3. For purposes of this MOU, words with bold **(bold)** and underlined (underlined) type shall constitute additions to the original text of the Agreement and words with strikethrough ~~(strikethrough)~~ type shall constitute deletions from the original text of the Agreement.

4. By executing this MOU, it is understood and agreed by the parties that Sections 28.3 and 28.7 of the Agreement are hereby amended to read as follows:

28.3 Effective the first full pay period or following October 1, 2025, whichever is later, for fiscal year 2026 employees will be slotted into the following pay schedule:

Officers YOS	Pay/HR.
Prob	~~$25.00~~ **25.75**
1	~~$25.49~~ **26.52**
2	~~$26.66~~ **27.32**
3	~~$27.03~~ **28.14**
4	~~$27.42~~ **28.98**
5	~~$27.80~~ **29.85**
6	~~$28.20~~ **30.45**
7	~~$28.59~~ **31.06**
8	~~$29.00~~ **31.68**
9	~~$29.42~~ **32.31**
10	~~$29.83~~ **32.96**
11	~~$30.25~~ **33.62**
12	~~$30.68~~ **34.29**
13	~~$31.12~~ **34.98**
14	~~$31.56~~ **35.68**
15	~~$32.00~~ **36.39**
16	~~$32.46~~ **37.12**
17	~~$32.92~~ **37.86**
18	~~$33.38~~ **38.62**
19	~~$33.86~~ **39.39**
20	~~$34.34~~ **40.18**

Sergeants TIG	Pay/HR.
Prob	~~$32.00~~ **35.00**
1	~~$33.17~~ **35.70**
2	~~$34.17~~ **36.41**
3	~~$34.65~~ **37.14**
4	~~$35.13~~ **37.88**
5	~~$35.62~~ **38.64**
6	~~$36.12~~ **39.41**
7	~~$36.63~~ **40.20**
8	~~$37.14~~ **41.00**
9	~~$37.66~~ **41.82**
10	~~$38.18~~ **42.66**

28.~~6~~7. In addition to wages, incentive pay, if appropriate, shall be provided in accordance with pertinent Florida Statutes or in accordance with this contract.

Specialty pay will be provided to all employees who are assigned as members of a specialized or hazardous unit (division) or other groups which are herein specified as follows:

Specialty Assignment	Amount of Pay
Canine Officer	$75.00/pay period
Crime Suppression Team	$75.00/pay period
Crisis Negotiation Team	$75.00/pay period
Detective Assignment	$110.00/pay period
Drug Recognition Expert	$75.00/pay period
Emergency Response Team	$75.00/pay period
Field Training Officer	$75.00/pay period
Meth Team	$75.00/pay period
Motorcycle Officer	$75.00/pay period
Range Master	$75.00/pay period
Traffic Homicide Investigator	$75.00/pay period
School Resource Officer	**$75.00/pay period**

[*28.3 -- 28.7 shall be renumbered accordingly*]

The above amended terms and conditions are the entire understanding of the MOU between the parties. Except as provided above, no other changes are being made to the Agreement and all other provisions thereof remain in full force and effect.

This MOU shall become effective upon ratification by the Union members, approval by City Council, and execution by both parties.

[Signature Pages to Follow]

INTERNATIONAL UNION OF POLICE ASSOCIATIONS PERC CERTIFICATION #1983, IUPA, FLA:

MIKE U315 Date: 8/11/25

President, Unit Representation

CITY OF PORT ORANGE, FLORIDA

_____ Date:_____

Scott Stiltner, Mayor

Attest:

_____

Robin Fenwick, City Clerk

CITY COUNCIL AGENDA ITEM

COUNCIL MEETING DATE 8/19/2025

SUBJECT: (B8) Resolution No. 25-38 - Approval of Grant Subcontract in the amount of $17,521.87 from University of North Florida Training and Services, Institute Inc., d/b/a Institute of Police Technology and Management for Florida's Bicycle Pedestrian Focused Initiative: Communication and High Visibility and Enforcement Project

DEPARTMENT: Police Services

GOAL: 1 - Public Safety

RECOMMENDED MOTION: Move to approve Resolution No. 25-38.

SUMMARY: The University of North Florida Training and Services, Institute Inc., d/b/a Institute of Police Technology and Management (IPTM) received a Florida Department of Transportation (FDOT) grant for Florida's Bicycle Pedestrian Focused Initiative: Communication and High Visibility and Enforcement Project. The subcontract between IPTM and the City in the amount of $17,521.87 encompasses a project that will utilize law enforcement staff to reinforce safe pedestrian, bicyclist, and driver behavior in priority counties. The goal of the effort is to reduce traffic crashes resulting in serious and fatal injuries to pedestrians and bicyclists using high-visibility education and enforcement details. This reimbursement contract will cover project expenses, including overtime hours for sworn law enforcement officers.

The grant aims to develop and implement effective community-level high-visibility education and enforcement details in areas with the highest representation of traffic crashes resulting in serious and fatal injuries to pedestrians and bicyclists. The goal is to mitigate crashes by increasing awareness of the laws and compliance with traffic laws that protect the safety of pedestrians and bicyclists by providing high-visibility education and enforcement of all road users (pedestrians, bicyclists, and motorists) to change behaviors and improve safety. The Police Department will conduct on-street education and enforcement details at pre-approved locations within pre-approved times and distribute educational materials with each contact.

The Police Department will use the funds to provide additional high-visibility patrols to focus on pedestrian, bicycle, and crosswalk safety violations through education and enforcement. Personnel assigned to this initiative will be paid overtime and will not affect minimum patrol staffing levels. Staff participating in this program will receive the required training.

The pre-approved locations for this High Visibility education and enforcement are:

- Dunlawton Avenue, from Village Trail to Nova Road
- Ridgewood Avenue, from Niver Street to Katherine Street
- Taylor Road/Dunlawton Avenue, from Summer Trees Road to Clyde Morris Boulevard
- Nova Road, from Samms Avenue to Gordon Street
- Clyde Morris Boulevard, Madeline Avenue to Reed Canal Road
- Nova Road from Palm Boulevard to Tree Garden Drive

This will be a part of the Fiscal Year 2025-26 budget.

PRESENTER: Manuel Marino

ATTACHMENTS:

1.	Resolution No 25-38 w exhibit	Resolution No 25-38 w exhibit.pdf
2.	2025 Pedestrian and Bicycle Safety HVE Program Agreement	2025 Pedestrian and Bicycle Safety HVE Program.pdf

Manuel Marino	Created/Initiated - 07/29/2025
Manuel Marino	Approved - 07/29/2025
Linda Truitt	Approved - 08/01/2025
Matthew Jones	Approved - 08/06/2025
Wayne Clark	Final Approval - 08/07/2025

RESOLUTION NO. 25-38

A RESOLUTION OF THE CITY COUNCIL OF THE CITY OF PORT ORANGE, VOLUSIA COUNTY, FLORIDA; APPROVING THE SUBCONTRACT FROM THE UNIVERSITY OF NORTH FLORIDA TRAINING AND SERVICES INSTITUTE, INC., D/B/A INSTITUTE OF POLICE TECHNOLOGY AND MANAGEMENT, FOR FLORIDA'S BICYCLE PEDESTRIAN FOCUSED INITIATIVE: COMMUNICATION AND HIGH VISIBILITY AND ENFORCEMENT PROJECT GRANT IN THE AMOUNT OF $17,521.87; AUTHORIZING BUDGET AMENDMENTS FOR REVENUES AND EXPENDITURES NECESSARY TO APPROPRIATE SAID GRANT FUNDS; AUTHORIZING THE MAYOR AND CITY CLERK TO EXECUTE ANY AGREEMENTS OR CONTRACTS; AND PROVIDING AN EFFECTIVE DATE.

WHEREAS, the University of North Florida Training and Services Institute Inc., d/b/a Institute of Police Technology and Management (IPTM) received a Florida Department of Transportation (FDOT) grant for Florida's Bicycle Pedestrian Focused Initiative: Communication and High Visibility and Enforcement Project; and

WHEREAS, the University of North Florida Training and Services, Institute Inc., d/b/a Institute of Police Technology and Management (IPTM) approved a grant amount of $17,521.87 for the Port Orange Police Department; and

WHEREAS, Florida Department of Transportation approved the subcontract agreement with the City of Port Orange in the amount of $17,521.87, attached hereto as **Exhibit "A"** and made a part hereof by reference ("Subcontract"); and

WHEREAS, the City Council of the City of Port Orange approves submitting reimbursements for eligible project expenditures; and

WHEREAS, The City Council desires to budget for the reimbursement grant from the University of North Florida Training and Services Institute Inc., d/b/a Institute of Police Technology and Management (IPTM) funded by Florida Department of Transportation (FDOT) for Florida's Bicycle Pedestrian Focused Initiative; Communication and High Visibility and Enforcement Project in the amount of $17,521.87.

NOW, THEREFORE, BE IT RESOLVED BY THE CITY COUNCIL OF THE CITY OF PORT ORANGE, VOLUSIA COUNTY, FLORIDA:

Section 1. The City Council of the City of Port Orange hereby approves the Subcontract with the University of North Florida Training and Services Institute Inc., d/b/a Institute of Police Technology and Management (IPTM), and thereby accepts the grant funding in the amount of $17,521.87.

Section 2. The City Manager is hereby authorized and directed to take such action as may be deemed necessary and appropriate in order to implement the provisions of this Resolution related to the budgeting of said grant for the revenues and expenditures for the above-referenced project. The City Manager may, as deemed appropriate, necessary, and convenient, delegate the powers of implementation as set forth herein to such City employees as deemed effectual and prudent in furtherance thereof.

Section 3. The Mayor and City Clerk are hereby authorized to sign any and all necessary documents to implement the provisions of this Resolution.

Section 4. This resolution shall become effective immediately upon adoption.

_____
MAYOR SCOTT STILTNER

ATTEST:

_____
Robin L. Fenwick, MMC, City Clerk

Adopted on the day of

Reviewed and Approved: _____
Shannon K. Balmer, Senior Assistant City Attorney

Docusign Envelope ID: C106C731-5B53-4452-B494-5A8802BEEE1F

EXHIBIT "A"

Letter of Agreement and Contract

In this contract between the City of Port Orange ("Vendor") and University of North Florida Training and Services Institute, Inc., d/b/a Institute of Police Technology and Management ("IPTM"), a direct support organization of the University of North Florida ("University"), the Vendor shall perform the services as outlined in the scope of services (Exhibits A & B). The contract period will begin upon execution and will end on May 8, 2026.

Total contract amount will not exceed $17,521.87

The parties to this contract shall be bound by all applicable state and federal requirements as outlined in Florida Department of Transportation (FDOT) Project # 433144-1-8404, FDOT Contract # G3E95. All services must be completed by May 8, 2026. The final invoice must be received by June 5, 2026 or payment will be forfeited.

It is expressly understood that the Vendor is an independent contractor, and not an agent of the FDOT or the University of North Florida. The FDOT and the University's ("State Agencies" or individually "State Agency") respective total liability in negligence or indemnity for acts of its employees or officers shall not exceed the limits of their waiver of sovereign immunity provided under Section 768.28, Florida Statutes. The FDOT, the University, and the Vendor shall each be responsible for its own attorney fees in the event of a dispute.

To the fullest extent permitted by law, the vendor shall indemnify and hold harmless IPTM and the State of Florida, Department of Transportation, including the Department's officers and employees, from liabilities, damages, losses and costs, including, but not limited to, reasonable attorney's fees, to the extent caused by the negligence, recklessness or intentional wrongful misconduct of the contractor/consultant and persons employed or utilized by the contractor/consultant in the performance of this Agreement.

This indemnification shall survive the termination of this Agreement. Nothing contained in this paragraph is intended to nor shall it constitute a waiver of the State of Florida and IPTM's sovereign immunity.

Vendor is a subdivision, as defined in Section 768.28, Florida Statutes, and Vendor agrees to be fully responsible only to the extent provided by Section 768.28, Florida Statutes, for the negligent or wrongful acts or omission of any employee of the Vendor while the employee is acting within the course and scope of the employee's employment, and for any damages proximately caused by said acts or omissions or torts.

Nothing herein shall be construed as consent by a State Agency or political subdivision of the State of Florida to be sued by third parties in any matter arising out of this contract. No State Agency or subdivision indemnifies any other party or person beyond the extent permitted under the law, no matter what the circumstances. Nothing herein shall be construed as a waiver by the FDOT, the University, and the Vendor of any rights or limits to liability existing under Section 768.28, Florida Statutes.

In accordance with the contract, the Vendor is authorized to perform the tasks detailed in the scope of services (Exhibits A & B) and is fully responsible for satisfactory completion of all services. Services performed prior to receiving an executed contract from the University will not be eligible for reimbursement. This contract does not involve the purchase of Tangible Personal Property, as defined in Chapter 273, Florida Statutes.

This is a cost reimbursable contract. To be eligible for reimbursement, all costs must be allowable pursuant to state and federal expenditure laws, rules and regulations and must be essential to the successful completion of the tasks identified in this contract for services.

If a cost benefits more than one project, a determination must be made and documentation provided to support that the cost is distributed in a reasonable and consistent manner across all benefiting projects.

CANCELLATION: This contract may be unilaterally cancelled by FDOT or the University for refusal by the Vendor to allow public access to all documents, papers, letters, or other material made or received by the Vendor in conjunction with this contract, unless Florida law provides that the records are confidential and/or exempt from the disclosure requirements of section 24(1) of Article 1 of the state constitution and section 119.07(1), Florida Statutes.

Docusign Envelope ID: C106C731-5B53-4452-B494-5A8802BEEE1F

EXHIBIT "A"

SCOPE OF SERVICES
PEDESTRIAN AND BICYCLE SAFETY
HIGH VISIBILITY EDUCATION AND ENFORCEMENT CAMPAIGN

I. OBJECTIVE:

The Florida Department of Transportation ("FDOT"), through a subgrant with University of North Florida ("University"), will utilize law enforcement support to reinforce safe pedestrian, bicyclist, and driver behaviors in priority counties in Florida. The goal of this effort is to reduce traffic crashes resulting in serious and fatal injuries to pedestrians and bicyclists using high visibility education and enforcement details.

II. PURPOSE:

In 2023, 3,375 people lost their lives in traffic crashes on Florida's roadways. More than 23% of them were pedestrians (791) and more than 6% were bicyclists (234).

The **Purpose** of this funding opportunity is to develop and implement effective community level High Visibility education and enforcement details in areas with the highest representation of traffic crashes resulting in serious and fatal injuries to pedestrians and bicyclists.

The project **Goal** is to mitigate crashes by increasing awareness of and compliance with traffic laws that protect the safety of pedestrians and bicyclists on Florida's roads.

Pedestrians and bicyclists are more vulnerable than all other road users. Traffic crashes involving pedestrians and bicyclists are more likely to result in fatal or serious injuries than any other types of traffic crashes.

Speed, impairment, and distractions contribute to unsafe conditions for pedestrians and bicyclists and may be included in enforcement operations where there is data to support the need for these interventions to improve the safety of pedestrians and bicyclists.

Pedestrian decoys may only be included in enforcement operations to improve driver yield rates at mid-block crossing locations to improve the safety of pedestrians and bicyclists.

This campaign is a component of Florida's Bicycle/Pedestrian Focused Initiative and is implemented by the Institute of Police Technology and Management (IPTM) under the direction of the Florida Department of Transportation (FDOT). This campaign supports the goals established in Florida's Pedestrian and Bicycle Strategic Safety Plan. High Visibility Enforcement activities are being implemented to mitigate crashes by educating pedestrians, bicyclists, and motorists on traffic laws pertaining to pedestrian and bicycle safety and increasing compliance with those laws.

III. IPTM RESPONSIBILITIES:

IPTM will provide the required training/training materials, a copy of Florida's Pedestrian and Bicycle Strategic Safety Plan, and educational materials to the Vendor for distribution during enforcement operations upon contract execution. Additional educational materials, bicycle lights, and electronic media may be requested by the Vendor but are subject to availability. IPTM reserves the right to review and audit the Vendor's compliance with the terms of this Letter of Agreement and Contract. IPTM also reserves the right to reduce the amount of funding allocated under this Letter of Agreement and Contract when it is determined that the Vendor will be unable to properly utilize the full funding amount as outlined herein.

IV. VENDOR SERVICES AND RESPONSIBILITIES:

Vendor will provide high visibility education and enforcement of all road users, including pedestrians, bicyclists, and motorists, to change behaviors and improve the safety of pedestrians and bicyclists. Vendor will conduct on-street education and enforcement details at pre-approved locations within pre-approved times and distribute educational materials with each contact. Education is the preferred method of behavior correction. Warnings and/or citations to pedestrians, bicyclists, and motorists will be guided by

Docusign Envelope ID: C106C731-5B53-4452-B494-5A8802BEEE1F

the Vendor's policies and procedures and must comply with Florida law. These operations are designed to reach more than just the individuals who are stopped or contacted, they should also be highly visible to anyone driving, walking, or biking in the area in a way that associates the enforcement activity with the safety awareness campaign. The Vendor shall record all detail activity that documents the education and enforcement outputs for each detail conducted during the contract period using the provided online platform.

To be reimbursable, activities conducted by the Vendor must meet the requirements listed in this Letter of Agreement and Contract to include the following:

- Operations must begin within 60 days of the contract execution date. Exceptions require the approval of IPTM.
- Only overtime hours for sworn law enforcement officers are eligible for reimbursement (non-sworn civilian personnel are not eligible unless explicitly approved in writing by IPTM).
- Operations must be highly visible to anyone driving, walking, or biking in the area. It is strongly suggested that operations include a combination of high visibility elements with a coordinated media awareness campaign similar to those used in sobriety checkpoints or other enforcement mobilizations.
- Funds may not to be used to supplant the Vendor's enforcement and educational efforts funded by other local, state, or federal sources. Duplicated efforts are not eligible for reimbursement.
- Vendor will not be reimbursed for education and enforcement details that take place at locations outside of those pre-approved by the FDOT and outlined in Exhibit C of this agreement.
- Vendor will not be reimbursed for education and enforcement details that take place outside of the day(s) and times of day pre-approved by the FDOT and outlined in Exhibit C of this agreement (each detail location may have different pre-approved days and times of day).

Minimum Level of Service

Vendor shall conduct highly visible education and enforcement operations at each of the identified locations outlined in Exhibit C of this agreement, prioritizing efforts towards higher ranked (Tier 1) locations.

☒Both Tier 1 and Tier 2 locations: Tier 1 locations shall be worked from contract execution through May 8, 2026. Tier 2 locations can be worked in addition to Tier 1 locations from February 1, 2026 through May 8, 2026.

☐Only Tier 2 locations shall be worked from contract execution through May 8, 2026.

A minimum of two (2) media engagements should be conducted in conjunction with these high visibility enforcement operations during the contract period.

Vendor performance will be evaluated based on their prioritization of enforcement details to areas with the highest representation of traffic crashes resulting in serious and fatal injuries to pedestrians and bicyclists and on the visibility of the mobilization.

- Vendor will not be reimbursed for administrative time, travel time, meal breaks or other hours that are not for participation in the education and enforcement overtime details aimed at reducing traffic crashes resulting in serious or fatal injuries to pedestrians or bicyclists, or attendance at required training outside of the training requirement listed within this contractual service agreement.
- Each officer is limited to a maximum of eight (8) hours of reimbursable overtime in any single day (defined as 12:00 a.m. to 11:59 p.m.), unless there are extenuating circumstances at the end of a shift

Docusign Envelope ID: C106C731-5B53-4452-B494-5A8802BEEE1F

that causes the hours to exceed this limit. **Extenuating circumstances must be documented in the activity report.** There is no pay period limit.

- Officer training is mandatory. For their overtime hours to be reimbursable, officers working the education and enforcement details must first complete the required four-hour training course titled *"Pedestrian and Bicycle Law Enforcement: Laws, Procedures and Best Practices."* To remain eligible, officer "refresher training" is required for any officer who completed the four-hour training course titled *"Pedestrian and Bicycle Law Enforcement: Laws, Procedures and Best Practices"* **prior to June 30, 2024.** The refresher training class titled "*Pedestrian & Bicycle Safety: A Law Enforcement Review"* is not a substitute for the 4-hour classroom course for initial eligibility into this program.

- Vendor may be reimbursed for a limited number of sworn law enforcement officers to attend the required four-hour training course titled *"Pedestrian and Bicycle Law Enforcement: Laws, Procedures and Best Practices"* or the two (2) hour online refresher training course titled "*Pedestrian & Bicycle Safety: A Law Enforcement Review".* For their overtime hours to be reimbursable, attendance at the training must be within the contract period and must be on overtime status. Although every sworn law enforcement officer may attend the training, overtime reimbursement is limited to those officers who will actually take part in education and enforcement details.

- Public awareness is a key element of the high visibility enforcement model. The Vendor is strongly encouraged to distribute a minimum of two (2) media releases during the contract period. The first media release announcing that operations are beginning should be distributed a minimum of seven (7) days in advance of the first education/enforcement detail. The second media release should include a reminder that details are ongoing. This second media release should be distributed approximately halfway through the contract period. Additional media engagement is also encouraged throughout the contract period. Media releases may include social or digital media but must also be distributed through local media outlets. Proof of media engagement should be provided within 30 days of the press release or news report.

- The Vendor shall distribute the provided safety educational materials during all education and enforcement details. Materials will be provided to Vendor free of charge for this purpose.

- Vendor may elect to participate in bicycle light distribution to improve nighttime visibility and compliance with F.S. 316.2065(7). A Bicycle Light Distribution Assurance Form provided by IPTM is required for each bicycle light set that is distributed. The required documentation must be signed by the officer and submitted to IPTM or through the provided online platform along with the detail report for the period in which the lights were distributed.

- Invoice submissions must document that each officer was on overtime status while working the education and enforcement details in order to be eligible for reimbursement.

HIGH VISIBILITY ENFORCEMENT (HVE)

All law enforcement agencies shall conduct High Visibility Enforcement while conducting enforcement under this contractual service agreement.

High Visibility Enforcement is defined as:

Intense:	Enforcement activities are over and above what normally takes place.
Frequent:	Enforcement occurs often enough to create general deterrence.
Visible:	A majority of the public sees or hears about the enforcement.
Strategic:	Enforcement targets high-risk locations during high-risk times.

Docusign Envelope ID: C106C731-5B53-4452-B494-5A8802BEEE1F

APPROVED PERSONNEL LIST

Prior to commencing the services outlined under this contract, Vendor must submit a list of personnel authorized to participate in overtime details under this agreement through the provided online platform. The name and fully loaded hourly overtime rates to be used for each officer must be submitted. The overtime rates may include the costs of hourly overtime plus associated fringe benefits paid upon the overtime. Only hours from officers listed shown on the authorized personnel list are eligible for reimbursement under this agreement. The authorized personnel list shall be updated as needed to add officers and update overtime pay rates.

METHOD OF COMPENSATION/PAYMENT SCHEDULE

Invoices must be submitted at least monthly (every 30 days), beginning within 90 days of the contract execution date. Invoices must contain the following:

- **Invoice** to include summary of hours charged and total due.

- **Payroll documentation:** Vendor must submit payroll documentation to accompany each invoice. This payroll documentation should clearly indicate that the detail hours worked under this contract were on overtime status along with the overtime rates that were paid. As this is a cost-reimbursable contract, IPTM can only reimburse the Vendor for an amount up to the total costs incurred for the overtime worked; therefore, Vendor must include either a pay stub or payroll ledger documenting payment to each officer for which reimbursement is requested. It is the responsibility of the Vendor to redact any personally identifiable information such as Social Security numbers prior to submission.

  The overtime pay rate for personnel shall be based on the actual cost per employee in accordance with the agency's payroll policy. Each agency shall comply with Fair Labor Standards Act (FLSA) requirements and thresholds for overtime accrual and payment and its own policies and procedures, insofar as those policies apply uniformly to both federally financed and other activities of the agency, as required by 2 CFR 200.403(c). Additional hours may be called overtime, call-out, off duty, extra, additional, etc.

  As part of the "fully burdened" overtime costs, the agency can be reimbursed for the additional benefit costs paid on the overtime worked. These benefit costs must be additional costs incurred specifically as a result of the overtime being reimbursed. These benefits may include associated portions of FICA (Social Security and Medicare), Worker's Compensation, Retirement benefits, and fixed shift differential costs. Prorated portions of leave accrual, health/life insurance, uniform allowance, vehicle usage, salary incentive, and other standard benefits cannot be reimbursed as they are not additional costs incurred specifically as a result of the overtime worked.

- **Detail Activity:** Vendor shall record detail activity that documents the education and enforcement outputs for each detail conducted through the provided online platform. The activity will document that each detail conducted meets the minimum level of service as outlined in this agreement and show the officers assigned, date, days and/or times, location, contacts made, number of materials distributed, and the numbers of educational contacts, warnings and citations issued to motorists, pedestrians, and bicyclists for each statute. Detail Activity submissions shall be consistent with the corresponding invoices and payroll documentation.

All invoices must be submitted through the provided online platform. In case the provided online platform is unavailable, invoice documentation can be sent electronically to ped.bike.safety@iptm.org.

All requests for reimbursement shall be signed by an Authorized Representative of the Vendor, or their delegate.

The University has 40-days to review and process invoices for services. This process begins on the date the Vendor invoice is received, inspected, and approved. Invoices may be returned if not completed properly. If a payment is not available within 40 days from the University approval, a separate interest

Docusign Envelope ID: C106C731-5B53-4452-B494-5A8802BEEE1F

penalty at a rate as established pursuant to Section 55.03(1), F.S., will be due and payable, in addition to the invoice amount, to the Vendor. Interest penalties of less than one (1) dollar will not be enforced unless the Vendor requests payment. Invoices that have to be returned to a Vendor because of Vendor preparation errors will result in a delay in the payment and is not subject to the interest penalty. The Vendor payment requirements do not start until a properly completed financial reimbursement request is provided to the University.

FINANCIAL CONSEQUENCES

Payment shall be made only after receipt and approval of services provided. If the University determines that the performance of the Vendor does not comply with the contract requirements, the University shall notify the Vendor of the deficiency to be corrected, and the correction shall be made within a timeframe to be specified by the University. If the deficiency is subsequently resolved, the University agrees to pay the invoice(s) for the unpaid amount(s) during the next billing period. If the Vendor is unable to resolve the deficiency, the funds shall be forfeited at the end of this contractual service agreement.

PRE-APPROVED HVE LOCATIONS

Education and enforcement overtime details are only authorized at locations (specific intersections, corridors, and/or regions) that have been pre-approved by the FDOT. Vendor may not be reimbursed for efforts conducted at locations that have not been pre-approved, that take place prior to the date of the approval of this agreement, or that do not comply with the minimum level of service as outlined in this agreement.

Maximum number of officers permitted at pre-approved locations:

- 0.5 mile or less - 3 officers permitted
- 0.51 miles to 0.75 miles – 5 officers permitted
- 0.76 miles or more – 8 officers permitted

The Vendor will not be eligible for reimbursement for officers that exceed the maximum number permitted.

Each pre-approved location will have clearly defined boundaries; day(s) and times of day in which the overtime details can be worked and will be outlined in Exhibit C.

REQUESTS FOR ADDITIONAL FUNDING

The Vendor may request an increase to the total funding amount of this contract during the contract period. If the funding is available, the increased funding request may be considered if the Vendor has:

- satisfied all of the provision listed within this contract
- submitted timely invoices and record of detail activity submissions
- conducted HVE overtime detail efforts in a manner that supports the stated goal
- expended 80% or more of the current contract funding amount
- pedestrian and bicyclist crash circumstances within the Vendor's jurisdiction support the increased funding amount

Increased funding will be based upon availability and must be approved by the FDOT.

Increased funding will be accomplished through an amendment to this contract which must be signed by the FDOT, Vendor, and IPTM.

Requests for increased funding must be submitted to IPTM and received on or before February 27, 2026.

Docusign Envelope ID: C106C731-5B53-4452-B494-5A8802BEEE1F

NON-DISCRIMINATION AND ETHICAL STANDARDS

No person shall, on the ground of race, color, religion, sex, handicap, or national origin, be subjected to discrimination under any program or activity supported by this contract. The agency agrees to comply with the Florida Civil Rights Act (F.S. 760)
http://www.leg.state.fl.us/statutes/index.cfm?App_mode=Display_Statute&URL=0700-0799/0760/0760.html

All officers participating in High Visibility Enforcement activities are required to comply with the Law Enforcement Officer Ethical Standards of Conduct as established by the Florida Department of Law Enforcement. https://www.fdle.state.fl.us/Content/CJST/Menu/Officer-Requirements-Main-Page/LE-Ethical-Standards-of-Conduct.aspx

CORE ACTIVITY PERFORMANCE MEASURES / MINIMUM LEVEL OF SERVICE TO BE PERFORMED AND CRITERIA FOR EVALUATING SUCCESSFUL COMPLETION.

Each law enforcement agency is encouraged to complete all of the tasks as outlined within this contract. All agencies are required to complete a minimum of (80%) eighty percent of contracted efforts within the contract period to be eligible for "agency of the year award" consideration. Each successive fiscal year, agencies will be prioritized for funding based on percentage of performance expectations that were met.

CONSEQUENCES FOR NON-PERFORMANCE

If the Vendor is unable to properly utilize the full funding amount as outlined herein, the amount of funding for subsequent periods may be reduced. In the event that the required services are in dispute, the invoice may be pro-rated, reduced, or payment withheld until adequate documentation is provided to support the completion of such services and the dispute is resolved. If requirements are not met, the invoice will be pro-rated and payment will only be made for services that were completed as outlined in this agreement. Failure to submit invoices, detail activity reports, or other deliverables as outlined in this contract may result in termination of the agreement.

Docusign Envelope ID: C106C731-5B53-4452-B494-5A8802BEEE1F

EXHIBIT "B"

EFFORT SUMMARY

FLORIDA'S PEDESTRIAN AND BICYCLE FOCUSED INTITIATIVE
HIGH VISIBILITY ENFORCEMENT CAMPAIGN

QUANTIFIABLE, MEASURABLE, AND VERIFIABLE DELIVERABLES

- A minimum of two (2) media engagements should be conducted in conjunction with these high visibility enforcement operations during the contract period.
- Detail Activity Reports shall be submitted for each education and enforcement detail worked.
- Bicycle Light Distribution Assurance Forms shall be submitted for each bicycle light kit distributed.
- Invoices shall be submitted for each month or payroll period in which overtime details were performed beginning the month following contract execution.

PERFORMANCE MEASURES

Proof of performance documentation shall be submitted. This includes, but is not limited to, the following:

- Detail Activity Submissions
- Proof of media engagements
- Proof of overtime hours worked

BUDGET/COST ANALYSIS

- The name and fully loaded hourly overtime rates to be used for each officer must be submitted.
- The overtime rates may include the costs of hourly overtime plus associated fringe benefits paid upon the overtime.
- Only hours from officers listed and shown on the authorized personnel list are eligible for reimbursement under this agreement.
- Only overtime hours for sworn law enforcement officers are eligible for reimbursement (non-sworn civilian personnel are not eligible unless explicitly approved in writing by IPTM).
- Each officer is limited to a maximum of eight (8) hours of reimbursable overtime in any single day (defined as 12:00 a.m. to 11:59 p.m.).
- Only maximum number of officers permitted at pre-approved locations are eligible for reimbursement under this agreement.
- Payroll documentation should clearly indicate that the detail hours worked under this contract were on overtime status along with the overtime rates that were paid.
- ☒Both Tier 1 and Tier 2 locations: Tier 1 locations shall be worked from contract execution through May 8, 2026. Tier 2 locations can be worked in addition to Tier 1 locations from February 1, 2026 through May 8, 2026.
  ☐Only Tier 2 locations shall be worked from contract execution through May 8, 2026.
- Payment shall be made only after receipt and approval of services provided.

Total contract amount not to exceed: $17,521.87

Docusign Envelope ID: C106C731-5B53-4452-B494-5A8802BEEE1F

EXHIBIT "C"

Locations for Port Orange Police Department
Florida's Pedestrian and Bicycle Focused Initiative
High Visibility Enforcement Campaign

Rank	Roadway Name	From	To	Length (miles)	Tier	Time Range		Day of the Week
						From	To	
3	DUNLAWTON AVENUE	VILLAGE TRAIL	NOVA ROAD	0.53	1	900	2200	MONDAY, WEDNESDAY, THURSDAY, FRIDAY, SUNDAY
5	RIDGEWOOD AVENUE	NIVER STREET	KATHERINE STREET	0.62	1	1300	2000	MONDAY, TUESDAY, WEDNESDAY, SATURDAY
10	TAYLOR ROAD/ DUNLAWTON AVENUE	SUMMER TREES ROAD	CLYDE MORRIS BLVD	1.29	1	600	2300	MONDAY, TUESDAY, WEDNESDAY, THURSDAY, FRIDAY, SUNDAY
14	NOVA ROAD	SAMMS AVENUE	GORDON STREET	0.38	1	700	1700	MONDAY, TUESDAY, WEDNESDAY
15	CLYDE MORRIS BLVD	MADELINE AVENUE	REED CANAL ROAD	0.50	1	600	2100	MONDAY, TUESDAY, THURSDAY, SUNDAY
33	NOVA ROAD	PALM BLVD	TREE GARDEN DRIVE	0.46	2	1000	1200	TUESDAY, WEDNESDAY, THURSDAY, FRIDAY, SATURDAY, SUNDAY

Data Source: Signal 4 Analytics 7/1/2019-6/30/2024 (downloaded March 2025). Table lists roadway segments with high representation of traffic crashes resulting in serious injuries and fatalities to pedestrians and bicyclists.

Docusign Envelope ID: C106C731-5B53-4452-B494-5A8802BEEE1F

EXHIBIT "C"

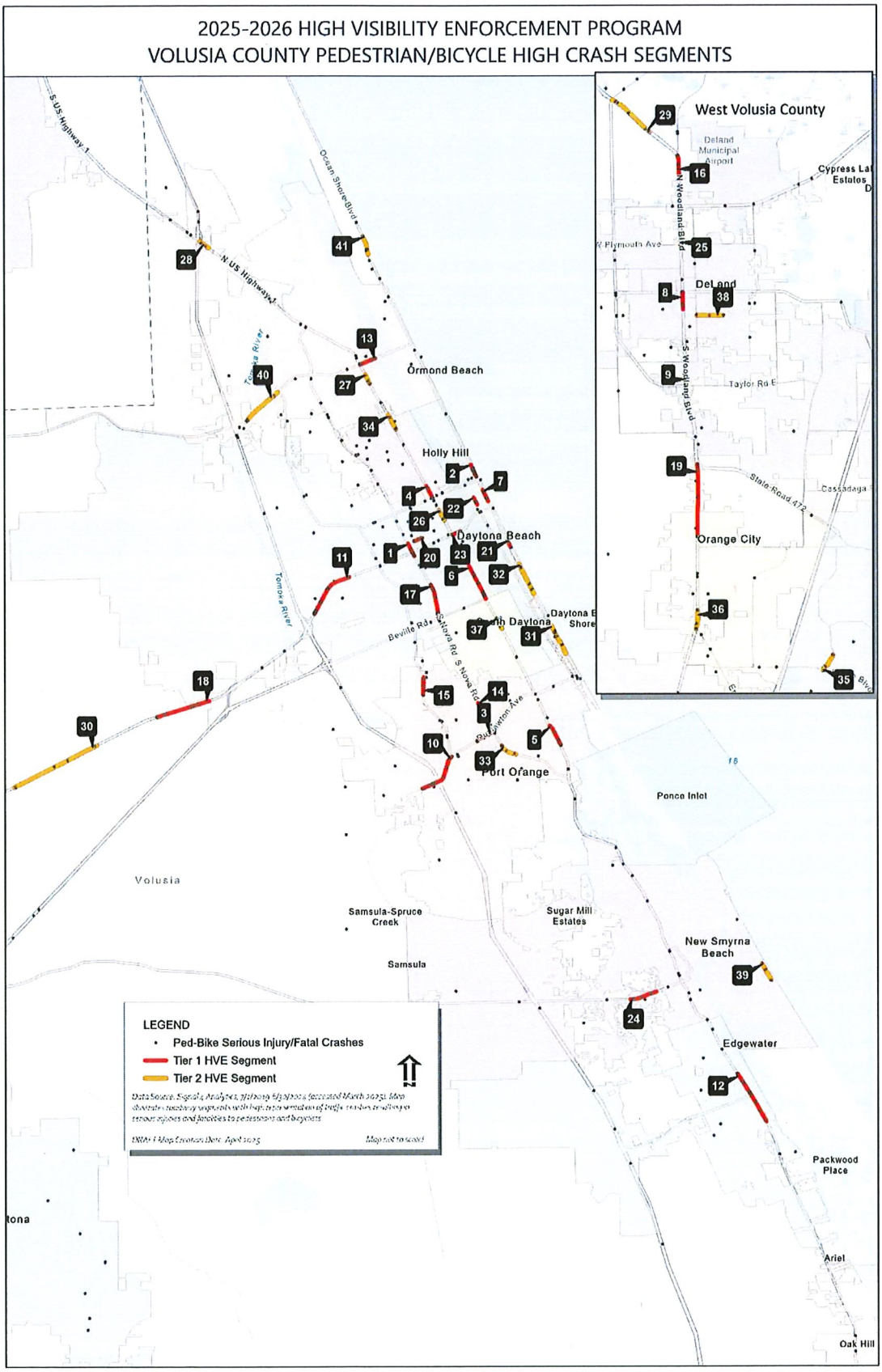

Docusign Envelope ID: C106C731-5B53-4452-B494-5A8802BEEE1F

Letter of Agreement and Contract

Execution of Agreement. This Agreement may be simultaneously executed in a minimum of two counterparts, each of which so executed shall be deemed to be an original, and such counterparts together shall constitute one in the same instrument.

University of North Florida Training and Services Institute, Inc.
d/b/a Institute of Police Technology and Management

George Androuin, Assistant Vice President — Date

Cameron Pucci, Director — Date

VENDOR ACKNOWLEDGEMENT: By signing below, I certify that I have read the entire document, agree to abide by the pricing and all terms and conditions of this Letter of Agreement and Contract, and that I am authorized to sign for the Vendor.

Vendor Name: City of Port Orange

Address: 4545 South Clyde Morris Blvd, Port Orange, FL 32129

Vendor's Authorized Agent Signature — Date

Printed Name — Title

DocuSigned by:
Chris Craig
B67DFADA5D7C4E4...
07/09/2025 | 12:23 PM EDT
FDOT APPROVAL

Docusign Envelope ID: C106C731-5B53-4452-B494-5A8802BEEE1F

Exhibit "D"

FY2025 - Subcontract Agreement Required Federal Clauses, Per Part V

i. The parties to this subcontract shall be bound by all applicable sections of Part V: Acceptance and Agreement of Project # 433144-1-8404, FDOT Contract # G3E95. A final invoice must be received by June 5, 2026 or payment will be forfeited.

ii. **Buy America Act.** The Buy America Act prohibits the use of Federal highway safety grant funds to purchase any manufactured product or software/information technology systems whose unit purchase price is $5,000 or more, including motor vehicles, that is not produced in the United States. NHTSA may waive those requirements if (1) their application would be inconsistent with the public interest; (2) such materials and products are not produced in the United States in sufficient and reasonably available quantities and of a satisfactory quality; or (3) the inclusion of domestic material will increase the cost of the overall Project contract by more than 25 percent.

iii. **Certification Regarding Federal Lobbying.** The subcontractor certifies, to the best of his or her knowledge and belief, that:

1. No Federal appropriated funds have been paid or will be paid, by or on behalf of the undersigned, to any person for influencing or attempting to influence an officer or employee of any agency, a Member of Congress, an officer or employee of Congress, or an employee of a Member of Congress in connection with the awarding of any Federal contract, the making of any Federal grant, the making of any Federal loan, the entering into of any cooperative agreement, and the extension, continuation, renewal, amendment, or modification of any Federal contract, grant, loan, or cooperative agreement.

2. If any funds other than Federal appropriated funds have been paid or will be paid to any person for influencing or attempting to influence an officer or employee of any agency, a Member of Congress, an officer or employee of Congress, or an employee of a Member of Congress in connection with this Federal contract, grant, loan, or cooperative agreement, the undersigned shall complete and submit Standard Form-LLL, "Disclosure Form to Report Lobbying," in accordance with its instructions.

3. This certification is a material representation of fact upon which reliance was placed when this transaction was made or entered into. Submission of this certification is a prerequisite for making or entering into this transaction imposed by section 31 U.S.C 1352. Any person who fails to file the required certification shall be subject to a civil penalty of not less than $10,000 and not more than $100,000 for each such failure.

iv. **Cooperation with the Inspector General.** It is the duty of every subcontractor to cooperate with the inspector general in any investigation, audit, inspection, review, or hearing pursuant to this Agreement. Section 20.055(5), F.S.

v. **DBE Assurance**. The consultant or contractor and subconsultant or subcontractor shall not discriminate on the basis of race, color, national origin, or sex in the performance of this contract. The consultant or contractor shall carry out applicable requirements of 49 CFR, Part 26 in the award and administration of USDOT-assisted contracts. Failure by the consultant or contractor to carry out these requirements is a material breach of this contract, which may result in the termination of this contract or such other remedy, as the Subrecipient or the Department deems appropriate.

Docusign Envelope ID: C106C731-5B53-4452-B494-5A8802BEEE1F

vi. **E-Verify**. Any subcontractors performing work or providing services pursuant to the subgrant agreement are required to utilize the U.S. Department of Homeland Security's E-Verify system to verify the employment eligibility of all new employees hired by the subcontractor during the term of the Agreement.

vii. **Nondiscrimination**. During the performance of this subcontract, the Subcontractor agrees:

1. To comply with all Federal nondiscrimination laws and regulations, as may be amended from time to time

2. Not to participate directly or indirectly in the discrimination prohibited by any Federal non-discrimination law or regulation, as set forth in Appendix B of 49 CFR part 21 and herein

3. To permit access to its books, records, accounts, other sources of information, and its facilities as required by the FDOT State Safety Office, USDOT, or NHTSA

4. That, in the event a Subcontractor fails to comply with any nondiscrimination provisions in this subgrant, the Subrecipient will have the right to impose such subgrant sanctions as it or NHTSA determines are appropriate, including but not limited to withholding payments to the Subcontractor under the contract/agreement until the Subcontractor complies; and/or canceling, terminating, or suspending a contract or funding agreement, in whole or in part.

viii. **Clean Air Act and Federal Water Pollution Control Act**. Subcontracts for amounts in excess of $150,000 must comply with all applicable standards, orders or regulations issued pursuant to the Clean Air Act (42 U.S.C. 7401-7671q) as amended, and the Federal Water Pollution Control Act as amended (33 U.S.C. 1251-1387) as amended. Violations must be reported to the Federal awarding agency and the Regional Office of the Environmental Protection Agency (EPA).

ix. **Integrity Certification**. The Subcontractor certifies that neither it nor its contractors are presently debarred, suspended, proposed for debarment, declared ineligible, or voluntarily excluded from participating in this Agreement by any federal department or agency. This certification is a material representation of fact upon which the Department is relying in entering this Agreement. If it is later determined that the Subcontractor knowingly rendered an erroneous certification, in addition to other remedies available to the federal government, the department or agency with which this transaction originated may pursue available remedies, including suspension and/or debarment. The Subcontractor shall provide to the Department immediate written notice if at any time the Subcontractor learns that its certification was erroneous when submitted or has become erroneous by reason of changed circumstances.

x. **Contract Work Hours and Safety Standards Act**. All subcontracts in excess of $100,000 that involve the employment of mechanics or laborers must include a provision for compliance with 40 U.S.C. 3702 and 3704, as supplemented by Department of Labor regulations (29 CFR Part 5). Under 40 U.S.C. 3702 of the Act, each contractor must be required to compute the wages of every mechanic and laborer on the basis of a standard work week of 40 hours. Work in excess of the standard work week is permissible provided that the worker is compensated at a rate of not less than one and a half times the basic rate of pay for all hours worked in excess of 40 hours in the work week. The requirements of 40 U.S.C. 3704 are applicable to construction work and provide that no laborer or mechanic must be required to work in surroundings or under working conditions which are unsanitary, hazardous or dangerous. These requirements do not apply to the purchases of supplies or materials or articles ordinarily available on the open market, or contracts for transportation or transmission of intelligence.

xi. **Indemnification and Insurance**. To the extent permitted by law and as limited by and pursuant to the provisions of Section 768.28, F.S., the Subcontractor shall indemnify and hold harmless the Subrecipient and the State of Florida, Department of Transportation, including the Department's officers and employees, from

liabilities, damages, losses and costs, including, but not limited to, reasonable attorney's fees, to the extent caused by the negligence, recklessness or intentional wrongful misconduct of the contractor/consultant and persons employed or utilized by the contractor/consultant in the performance of this Agreement. This indemnification shall survive the termination of this Agreement. Nothing contained in this paragraph is intended to nor shall it constitute a waiver of the State of Florida and the Subrecipient's sovereign immunity.

xii. **Policy on Banning Text Messaging While Driving Act**. In accordance with Executive Order 13513, Federal Leadership on Reducing Text Messaging While Driving, and DOT Order 3902.10, Text Messaging While Driving, subcontractors are encouraged to:

Adopt and enforce workplace safety policies to decrease crashes caused by distracted driving, including policies to ban text messaging while driving company-owned or rented vehicles, Government-owned, leased or rented vehicles, or privately-owned vehicles when on official business or when performing any work on behalf of the Subrecipient agency and/or the Government.

Conduct workplace safety initiatives in a manner commensurate with the size of the business, such as establishment of new rules and programs or re-evaluation of existing programs to prohibit text messaging while driving, and education, awareness, and other outreach to employees about the safety risks associated with texting and driving.

Insert the substance of this section, including this sentence, in all sub-agreement/subcontracts funded with the subaward provided under this Agreement that are $15,000 or more.

xiii. **Human Trafficking**. The Subcontractor agrees that it and its employees that perform any work on the subcontract shall not, during the term of this Agreement, engage in trafficking in persons, procure a commercial sex act, or use forced labor in the performance of work on the subcontract.

xiv. **Contracting with Small and Minority Businesses, Women's Business Enterprises, and Labor Surplus Area Firms.** The Subcontractor agrees to take the following affirmative steps to assure that minority businesses, women's business enterprise, and labor surplus are used when possible:

1. Place qualified small and minority businesses and women's business enterprises on solicitation lists;
2. Assure that small and minority businesses, and women's business enterprises are solicited whenever they are potential sources;
3. Divide total requirements, when economically feasible, into smaller tasks or quantities to permit maximum participation by small and minority businesses, and women's business enterprises;
4. Establish delivery schedules, where the requirement permits, which encourage participation by small and minority businesses, and women's business enterprises;
5. Use the services and assistance, as appropriate, of such organizations as the Small Business Administration and the Minority Business Development Agency of the Department of Commerce; and
6. Requiring the prime contractor, if subcontracts are to be let, to take the affirmative steps listed in paragraphs (b)(1) through (5) of this section.

xv. **Termination for Convenience**. In accordance with Appendix II to 2 CFR Part 200—Contract Provisions for Non-Federal Entity Contracts Under Federal Awards, either Party may terminate this Agreement for convenience upon thirty (30) calendar days' advance written notice to the other Party. Termination of this Agreement, as such, will not affect payment for services satisfactorily furnished prior to the termination.

Docusign Envelope ID: C106C731-5B53-4452-B494-5A8802BEEE1F

Institute of Police Technology and Management

University of North Florida
12000 Alumni Drive | Jacksonville, Florida 32224
Phone: (904) 620-4786 | Fax: (904) 620-2453
www.iptm.org

July 1, 2025

Mr. Chris Craig
Traffic Safety Administrator
Florida Department of Transportation
605 Suwannee Street, MS 53
Tallahassee, Florida 32399

RE: Pedestrian and Bicycle Safety High Visibility Enforcement and Support Program
Project Number: 433144-1-8404
Contract Number: G3E95

Dear Mr. Craig,

We are requesting subcontract approval under the aforementioned subgrant agreement. The request is for approval of a contractual services agreement between IPTM and City of Port Orange in the amount of $17,521.87. Under the contract, Port Orange Police Department will conduct overtime high visibility education and enforcement operations through May 8, 2026.

I appreciate your consideration of this request.

Sincerely,

Angel Williams
Coordinator

Attachment

Docusign Envelope ID: C106C731-5B53-4452-B494-5A8802BEEE1F

Letter of Agreement and Contract

In this contract between the City of Port Orange ("Vendor") and University of North Florida Training and Services Institute, Inc., d/b/a Institute of Police Technology and Management ("IPTM"), a direct support organization of the University of North Florida ("University"), the Vendor shall perform the services as outlined in the scope of services (Exhibits A & B). The contract period will begin upon execution and will end on May 8, 2026.

Total contract amount will not exceed $17,521.87

The parties to this contract shall be bound by all applicable state and federal requirements as outlined in Florida Department of Transportation (FDOT) Project # 433144-1-8404, FDOT Contract # G3E95. All services must be completed by May 8, 2026. The final invoice must be received by June 5, 2026 or payment will be forfeited.

It is expressly understood that the Vendor is an independent contractor, and not an agent of the FDOT or the University of North Florida. The FDOT and the University's ("State Agencies" or individually "State Agency") respective total liability in negligence or indemnity for acts of its employees or officers shall not exceed the limits of their waiver of sovereign immunity provided under Section 768.28, Florida Statutes. The FDOT, the University, and the Vendor shall each be responsible for its own attorney fees in the event of a dispute.

To the fullest extent permitted by law, the vendor shall indemnify and hold harmless IPTM and the State of Florida, Department of Transportation, including the Department's officers and employees, from liabilities, damages, losses and costs, including, but not limited to, reasonable attorney's fees, to the extent caused by the negligence, recklessness or intentional wrongful misconduct of the contractor/consultant and persons employed or utilized by the contractor/consultant in the performance of this Agreement.

This indemnification shall survive the termination of this Agreement. Nothing contained in this paragraph is intended to nor shall it constitute a waiver of the State of Florida and IPTM's sovereign immunity.

Vendor is a subdivision, as defined in Section 768.28, Florida Statutes, and Vendor agrees to be fully responsible only to the extent provided by Section 768.28, Florida Statutes, for the negligent or wrongful acts or omission of any employee of the Vendor while the employee is acting within the course and scope of the employee's employment, and for any damages proximately caused by said acts or omissions or torts.

Nothing herein shall be construed as consent by a State Agency or political subdivision of the State of Florida to be sued by third parties in any matter arising out of this contract. No State Agency or subdivision indemnifies any other party or person beyond the extent permitted under the law, no matter what the circumstances. Nothing herein shall be construed as a waiver by the FDOT, the University, and the Vendor of any rights or limits to liability existing under Section 768.28, Florida Statutes.

In accordance with the contract, the Vendor is authorized to perform the tasks detailed in the scope of services (Exhibits A & B) and is fully responsible for satisfactory completion of all services. Services performed prior to receiving an executed contract from the University will not be eligible for reimbursement. This contract does not involve the purchase of Tangible Personal Property, as defined in Chapter 273, Florida Statutes.

This is a cost reimbursable contract. To be eligible for reimbursement, all costs must be allowable pursuant to state and federal expenditure laws, rules and regulations and must be essential to the successful completion of the tasks identified in this contract for services.

If a cost benefits more than one project, a determination must be made and documentation provided to support that the cost is distributed in a reasonable and consistent manner across all benefiting projects.

CANCELLATION: This contract may be unilaterally cancelled by FDOT or the University for refusal by the Vendor to allow public access to all documents, papers, letters, or other material made or received by the Vendor in conjunction with this contract, unless Florida law provides that the records are confidential and/or exempt from the disclosure requirements of section 24(1) of Article 1 of the state constitution and section 119.07(1), Florida Statutes.

Docusign Envelope ID: C106C731-5B53-4452-B494-5A8802BEEE1F

EXHIBIT "A"

SCOPE OF SERVICES
PEDESTRIAN AND BICYCLE SAFETY
HIGH VISIBILITY EDUCATION AND ENFORCEMENT CAMPAIGN

I. OBJECTIVE:

The Florida Department of Transportation ("FDOT"), through a subgrant with University of North Florida ("University"), will utilize law enforcement support to reinforce safe pedestrian, bicyclist, and driver behaviors in priority counties in Florida. The goal of this effort is to reduce traffic crashes resulting in serious and fatal injuries to pedestrians and bicyclists using high visibility education and enforcement details.

II. PURPOSE:

In 2023, 3,375 people lost their lives in traffic crashes on Florida's roadways. More than 23% of them were pedestrians (791) and more than 6% were bicyclists (234).

The **Purpose** of this funding opportunity is to develop and implement effective community level High Visibility education and enforcement details in areas with the highest representation of traffic crashes resulting in serious and fatal injuries to pedestrians and bicyclists.

The project **Goal** is to mitigate crashes by increasing awareness of and compliance with traffic laws that protect the safety of pedestrians and bicyclists on Florida's roads.

Pedestrians and bicyclists are more vulnerable than all other road users. Traffic crashes involving pedestrians and bicyclists are more likely to result in fatal or serious injuries than any other types of traffic crashes.

Speed, impairment, and distractions contribute to unsafe conditions for pedestrians and bicyclists and may be included in enforcement operations where there is data to support the need for these interventions to improve the safety of pedestrians and bicyclists.

Pedestrian decoys may only be included in enforcement operations to improve driver yield rates at mid-block crossing locations to improve the safety of pedestrians and bicyclists.

This campaign is a component of Florida's Bicycle/Pedestrian Focused Initiative and is implemented by the Institute of Police Technology and Management (IPTM) under the direction of the Florida Department of Transportation (FDOT). This campaign supports the goals established in Florida's Pedestrian and Bicycle Strategic Safety Plan. High Visibility Enforcement activities are being implemented to mitigate crashes by educating pedestrians, bicyclists, and motorists on traffic laws pertaining to pedestrian and bicycle safety and increasing compliance with those laws.

III. IPTM RESPONSIBILITIES:

IPTM will provide the required training/training materials, a copy of Florida's Pedestrian and Bicycle Strategic Safety Plan, and educational materials to the Vendor for distribution during enforcement operations upon contract execution. Additional educational materials, bicycle lights, and electronic media may be requested by the Vendor but are subject to availability. IPTM reserves the right to review and audit the Vendor's compliance with the terms of this Letter of Agreement and Contract. IPTM also reserves the right to reduce the amount of funding allocated under this Letter of Agreement and Contract when it is determined that the Vendor will be unable to properly utilize the full funding amount as outlined herein.

IV. VENDOR SERVICES AND RESPONSIBILITIES:

Vendor will provide high visibility education and enforcement of all road users, including pedestrians, bicyclists, and motorists, to change behaviors and improve the safety of pedestrians and bicyclists. Vendor will conduct on-street education and enforcement details at pre-approved locations within pre-approved times and distribute educational materials with each contact. Education is the preferred method of behavior correction. Warnings and/or citations to pedestrians, bicyclists, and motorists will be guided by

Docusign Envelope ID: C106C731-5B53-4452-B494-5A8802BEEE1F

the Vendor's policies and procedures and must comply with Florida law. These operations are designed to reach more than just the individuals who are stopped or contacted, they should also be highly visible to anyone driving, walking, or biking in the area in a way that associates the enforcement activity with the safety awareness campaign. The Vendor shall record all detail activity that documents the education and enforcement outputs for each detail conducted during the contract period using the provided online platform.

To be reimbursable, activities conducted by the Vendor must meet the requirements listed in this Letter of Agreement and Contract to include the following:

- Operations must begin within 60 days of the contract execution date. Exceptions require the approval of IPTM.
- Only overtime hours for sworn law enforcement officers are eligible for reimbursement (non-sworn civilian personnel are not eligible unless explicitly approved in writing by IPTM).
- Operations must be highly visible to anyone driving, walking, or biking in the area. It is strongly suggested that operations include a combination of high visibility elements with a coordinated media awareness campaign similar to those used in sobriety checkpoints or other enforcement mobilizations.
- Funds may not to be used to supplant the Vendor's enforcement and educational efforts funded by other local, state, or federal sources. Duplicated efforts are not eligible for reimbursement.
- Vendor will not be reimbursed for education and enforcement details that take place at locations outside of those pre-approved by the FDOT and outlined in Exhibit C of this agreement.
- Vendor will not be reimbursed for education and enforcement details that take place outside of the day(s) and times of day pre-approved by the FDOT and outlined in Exhibit C of this agreement (each detail location may have different pre-approved days and times of day).

Minimum Level of Service

Vendor shall conduct highly visible education and enforcement operations at each of the identified locations outlined in Exhibit C of this agreement, prioritizing efforts towards higher ranked (Tier 1) locations.

☒Both Tier 1 and Tier 2 locations: Tier 1 locations shall be worked from contract execution through May 8, 2026. Tier 2 locations can be worked in addition to Tier 1 locations from February 1, 2026 through May 8, 2026.

☐Only Tier 2 locations shall be worked from contract execution through May 8, 2026.

A minimum of two (2) media engagements should be conducted in conjunction with these high visibility enforcement operations during the contract period.

Vendor performance will be evaluated based on their prioritization of enforcement details to areas with the highest representation of traffic crashes resulting in serious and fatal injuries to pedestrians and bicyclists and on the visibility of the mobilization.

- Vendor will not be reimbursed for administrative time, travel time, meal breaks or other hours that are not for participation in the education and enforcement overtime details aimed at reducing traffic crashes resulting in serious or fatal injuries to pedestrians or bicyclists, or attendance at required training outside of the training requirement listed within this contractual service agreement.
- Each officer is limited to a maximum of eight (8) hours of reimbursable overtime in any single day (defined as 12:00 a.m. to 11:59 p.m.), unless there are extenuating circumstances at the end of a shift

Docusign Envelope ID: C106C731-5B53-4452-B494-5A8802BEEE1F

that causes the hours to exceed this limit. **Extenuating circumstances must be documented in the activity report.** There is no pay period limit.

- Officer training is mandatory. For their overtime hours to be reimbursable, officers working the education and enforcement details must first complete the required four-hour training course titled *"Pedestrian and Bicycle Law Enforcement: Laws, Procedures and Best Practices."* To remain eligible, officer "refresher training" is required for any officer who completed the four-hour training course titled *"Pedestrian and Bicycle Law Enforcement: Laws, Procedures and Best Practices"* **prior to June 30, 2024.** The refresher training class titled "*Pedestrian & Bicycle Safety: A Law Enforcement Review"* is not a substitute for the 4-hour classroom course for initial eligibility into this program.

- Vendor may be reimbursed for a limited number of sworn law enforcement officers to attend the required four-hour training course titled *"Pedestrian and Bicycle Law Enforcement: Laws, Procedures and Best Practices"* or the two (2) hour online refresher training course titled "*Pedestrian & Bicycle Safety: A Law Enforcement Review".* For their overtime hours to be reimbursable, attendance at the training must be within the contract period and must be on overtime status. Although every sworn law enforcement officer may attend the training, overtime reimbursement is limited to those officers who will actually take part in education and enforcement details.

- Public awareness is a key element of the high visibility enforcement model. The Vendor is strongly encouraged to distribute a minimum of two (2) media releases during the contract period. The first media release announcing that operations are beginning should be distributed a minimum of seven (7) days in advance of the first education/enforcement detail. The second media release should include a reminder that details are ongoing. This second media release should be distributed approximately halfway through the contract period. Additional media engagement is also encouraged throughout the contract period. Media releases may include social or digital media but must also be distributed through local media outlets. Proof of media engagement should be provided within 30 days of the press release or news report.

- The Vendor shall distribute the provided safety educational materials during all education and enforcement details. Materials will be provided to Vendor free of charge for this purpose.

- Vendor may elect to participate in bicycle light distribution to improve nighttime visibility and compliance with F.S. 316.2065(7). A Bicycle Light Distribution Assurance Form provided by IPTM is required for each bicycle light set that is distributed. The required documentation must be signed by the officer and submitted to IPTM or through the provided online platform along with the detail report for the period in which the lights were distributed.

- Invoice submissions must document that each officer was on overtime status while working the education and enforcement details in order to be eligible for reimbursement.

HIGH VISIBILITY ENFORCEMENT (HVE)

All law enforcement agencies shall conduct High Visibility Enforcement while conducting enforcement under this contractual service agreement.

High Visibility Enforcement is defined as:

Intense:	Enforcement activities are over and above what normally takes place.
Frequent:	Enforcement occurs often enough to create general deterrence.
Visible:	A majority of the public sees or hears about the enforcement.
Strategic:	Enforcement targets high-risk locations during high-risk times.

Docusign Envelope ID: C106C731-5B53-4452-B494-5A8802BEEE1F

APPROVED PERSONNEL LIST

Prior to commencing the services outlined under this contract, Vendor must submit a list of personnel authorized to participate in overtime details under this agreement through the provided online platform. The name and fully loaded hourly overtime rates to be used for each officer must be submitted. The overtime rates may include the costs of hourly overtime plus associated fringe benefits paid upon the overtime. Only hours from officers listed shown on the authorized personnel list are eligible for reimbursement under this agreement. The authorized personnel list shall be updated as needed to add officers and update overtime pay rates.

METHOD OF COMPENSATION/PAYMENT SCHEDULE

Invoices must be submitted at least monthly (every 30 days), beginning within 90 days of the contract execution date. Invoices must contain the following:

- **Invoice** to include summary of hours charged and total due.

- **Payroll documentation:** Vendor must submit payroll documentation to accompany each invoice. This payroll documentation should clearly indicate that the detail hours worked under this contract were on overtime status along with the overtime rates that were paid. As this is a cost-reimbursable contract, IPTM can only reimburse the Vendor for an amount up to the total costs incurred for the overtime worked; therefore, Vendor must include either a pay stub or payroll ledger documenting payment to each officer for which reimbursement is requested. It is the responsibility of the Vendor to redact any personally identifiable information such as Social Security numbers prior to submission.

  The overtime pay rate for personnel shall be based on the actual cost per employee in accordance with the agency's payroll policy. Each agency shall comply with Fair Labor Standards Act (FLSA) requirements and thresholds for overtime accrual and payment and its own policies and procedures, insofar as those policies apply uniformly to both federally financed and other activities of the agency, as required by 2 CFR 200.403(c). Additional hours may be called overtime, call-out, off duty, extra, additional, etc.

  As part of the "fully burdened" overtime costs, the agency can be reimbursed for the additional benefit costs paid on the overtime worked. These benefit costs must be additional costs incurred specifically as a result of the overtime being reimbursed. These benefits may include associated portions of FICA (Social Security and Medicare), Worker's Compensation, Retirement benefits, and fixed shift differential costs. Prorated portions of leave accrual, health/life insurance, uniform allowance, vehicle usage, salary incentive, and other standard benefits cannot be reimbursed as they are not additional costs incurred specifically as a result of the overtime worked.

- **Detail Activity:** Vendor shall record detail activity that documents the education and enforcement outputs for each detail conducted through the provided online platform. The activity will document that each detail conducted meets the minimum level of service as outlined in this agreement and show the officers assigned, date, days and/or times, location, contacts made, number of materials distributed, and the numbers of educational contacts, warnings and citations issued to motorists, pedestrians, and bicyclists for each statute. Detail Activity submissions shall be consistent with the corresponding invoices and payroll documentation.

All invoices must be submitted through the provided online platform. In case the provided online platform is unavailable, invoice documentation can be sent electronically to ped.bike.safety@iptm.org.

All requests for reimbursement shall be signed by an Authorized Representative of the Vendor, or their delegate.

The University has 40-days to review and process invoices for services. This process begins on the date the Vendor invoice is received, inspected, and approved. Invoices may be returned if not completed properly. If a payment is not available within 40 days from the University approval, a separate interest

Docusign Envelope ID: C106C731-5B53-4452-B494-5A8802BEEE1F

penalty at a rate as established pursuant to Section 55.03(1), F.S., will be due and payable, in addition to the invoice amount, to the Vendor. Interest penalties of less than one (1) dollar will not be enforced unless the Vendor requests payment. Invoices that have to be returned to a Vendor because of Vendor preparation errors will result in a delay in the payment and is not subject to the interest penalty. The Vendor payment requirements do not start until a properly completed financial reimbursement request is provided to the University.

FINANCIAL CONSEQUENCES

Payment shall be made only after receipt and approval of services provided. If the University determines that the performance of the Vendor does not comply with the contract requirements, the University shall notify the Vendor of the deficiency to be corrected, and the correction shall be made within a timeframe to be specified by the University. If the deficiency is subsequently resolved, the University agrees to pay the invoice(s) for the unpaid amount(s) during the next billing period. If the Vendor is unable to resolve the deficiency, the funds shall be forfeited at the end of this contractual service agreement.

PRE-APPROVED HVE LOCATIONS

Education and enforcement overtime details are only authorized at locations (specific intersections, corridors, and/or regions) that have been pre-approved by the FDOT. Vendor may not be reimbursed for efforts conducted at locations that have not been pre-approved, that take place prior to the date of the approval of this agreement, or that do not comply with the minimum level of service as outlined in this agreement.

Maximum number of officers permitted at pre-approved locations:

- 0.5 mile or less - 3 officers permitted
- 0.51 miles to 0.75 miles – 5 officers permitted
- 0.76 miles or more – 8 officers permitted

The Vendor will not be eligible for reimbursement for officers that exceed the maximum number permitted.

Each pre-approved location will have clearly defined boundaries; day(s) and times of day in which the overtime details can be worked and will be outlined in Exhibit C.

REQUESTS FOR ADDITIONAL FUNDING

The Vendor may request an increase to the total funding amount of this contract during the contract period. If the funding is available, the increased funding request may be considered if the Vendor has:

- satisfied all of the provision listed within this contract
- submitted timely invoices and record of detail activity submissions
- conducted HVE overtime detail efforts in a manner that supports the stated goal
- expended 80% or more of the current contract funding amount
- pedestrian and bicyclist crash circumstances within the Vendor's jurisdiction support the increased funding amount

Increased funding will be based upon availability and must be approved by the FDOT.

Increased funding will be accomplished through an amendment to this contract which must be signed by the FDOT, Vendor, and IPTM.

Requests for increased funding must be submitted to IPTM and received on or before February 27, 2026.

Docusign Envelope ID: C106C731-5B53-4452-B494-5A8802BEEE1F

NON-DISCRIMINATION AND ETHICAL STANDARDS

No person shall, on the ground of race, color, religion, sex, handicap, or national origin, be subjected to discrimination under any program or activity supported by this contract. The agency agrees to comply with the Florida Civil Rights Act (F.S. 760)
http://www.leg.state.fl.us/statutes/index.cfm?App_mode=Display_Statute&URL=0700-0799/0760/0760.html

All officers participating in High Visibility Enforcement activities are required to comply with the Law Enforcement Officer Ethical Standards of Conduct as established by the Florida Department of Law Enforcement. https://www.fdle.state.fl.us/Content/CJST/Menu/Officer-Requirements-Main-Page/LE-Ethical-Standards-of-Conduct.aspx

CORE ACTIVITY PERFORMANCE MEASURES / MINIMUM LEVEL OF SERVICE TO BE PERFORMED AND CRITERIA FOR EVALUATING SUCCESSFUL COMPLETION.

Each law enforcement agency is encouraged to complete all of the tasks as outlined within this contract. All agencies are required to complete a minimum of (80%) eighty percent of contracted efforts within the contract period to be eligible for "agency of the year award" consideration. Each successive fiscal year, agencies will be prioritized for funding based on percentage of performance expectations that were met.

CONSEQUENCES FOR NON-PERFORMANCE

If the Vendor is unable to properly utilize the full funding amount as outlined herein, the amount of funding for subsequent periods may be reduced. In the event that the required services are in dispute, the invoice may be pro-rated, reduced, or payment withheld until adequate documentation is provided to support the completion of such services and the dispute is resolved. If requirements are not met, the invoice will be pro-rated and payment will only be made for services that were completed as outlined in this agreement. Failure to submit invoices, detail activity reports, or other deliverables as outlined in this contract may result in termination of the agreement.

Docusign Envelope ID: C106C731-5B53-4452-B494-5A8802BEEE1F

EXHIBIT "B"

EFFORT SUMMARY

FLORIDA'S PEDESTRIAN AND BICYCLE FOCUSED INTITIATIVE
HIGH VISIBILITY ENFORCEMENT CAMPAIGN

QUANTIFIABLE, MEASURABLE, AND VERIFIABLE DELIVERABLES

- A minimum of two (2) media engagements should be conducted in conjunction with these high visibility enforcement operations during the contract period.
- Detail Activity Reports shall be submitted for each education and enforcement detail worked.
- Bicycle Light Distribution Assurance Forms shall be submitted for each bicycle light kit distributed.
- Invoices shall be submitted for each month or payroll period in which overtime details were performed beginning the month following contract execution.

PERFORMANCE MEASURES

Proof of performance documentation shall be submitted. This includes, but is not limited to, the following:

- Detail Activity Submissions
- Proof of media engagements
- Proof of overtime hours worked

BUDGET/COST ANALYSIS

- The name and fully loaded hourly overtime rates to be used for each officer must be submitted.
- The overtime rates may include the costs of hourly overtime plus associated fringe benefits paid upon the overtime.
- Only hours from officers listed and shown on the authorized personnel list are eligible for reimbursement under this agreement.
- Only overtime hours for sworn law enforcement officers are eligible for reimbursement (non-sworn civilian personnel are not eligible unless explicitly approved in writing by IPTM).
- Each officer is limited to a maximum of eight (8) hours of reimbursable overtime in any single day (defined as 12:00 a.m. to 11:59 p.m.).
- Only maximum number of officers permitted at pre-approved locations are eligible for reimbursement under this agreement.
- Payroll documentation should clearly indicate that the detail hours worked under this contract were on overtime status along with the overtime rates that were paid.
- ☒Both Tier 1 and Tier 2 locations: Tier 1 locations shall be worked from contract execution through May 8, 2026. Tier 2 locations can be worked in addition to Tier 1 locations from February 1, 2026 through May 8, 2026.
  ☐Only Tier 2 locations shall be worked from contract execution through May 8, 2026.
- Payment shall be made only after receipt and approval of services provided.

Total contract amount not to exceed: $17,521.87

Docusign Envelope ID: C106C731-5B53-4452-B494-5A8802BEEE1F

EXHIBIT "C"

Locations for Port Orange Police Department
Florida's Pedestrian and Bicycle Focused Initiative
High Visibility Enforcement Campaign

Rank	Roadway Name	From	To	Length (miles)	Tier	Time Range		Day of the Week
						From	To	
3	DUNLAWTON AVENUE	VILLAGE TRAIL	NOVA ROAD	0.53	1	900	2200	MONDAY, WEDNESDAY, THURSDAY, FRIDAY, SUNDAY
5	RIDGEWOOD AVENUE	NIVER STREET	KATHERINE STREET	0.62	1	1300	2000	MONDAY, TUESDAY, WEDNESDAY, SATURDAY
10	TAYLOR ROAD/ DUNLAWTON AVENUE	SUMMER TREES ROAD	CLYDE MORRIS BLVD	1.29	1	600	2300	MONDAY, TUESDAY, WEDNESDAY, THURSDAY, FRIDAY, SUNDAY
14	NOVA ROAD	SAMMS AVENUE	GORDON STREET	0.38	1	700	1700	MONDAY, TUESDAY, WEDNESDAY
15	CLYDE MORRIS BLVD	MADELINE AVENUE	REED CANAL ROAD	0.50	1	600	2100	MONDAY, TUESDAY, THURSDAY, SUNDAY
33	NOVA ROAD	PALM BLVD	TREE GARDEN DRIVE	0.46	2	1000	1200	TUESDAY, WEDNESDAY, THURSDAY, FRIDAY, SATURDAY, SUNDAY

Data Source: Signal 4 Analytics 7/1/2019-6/30/2024 (downloaded March 2025). Table lists roadway segments with high representation of traffic crashes resulting in serious injuries and fatalities to pedestrians and bicyclists.

Docusign Envelope ID: C106C731-5B53-4452-B494-5A8802BEEE1F

EXHIBIT "C"

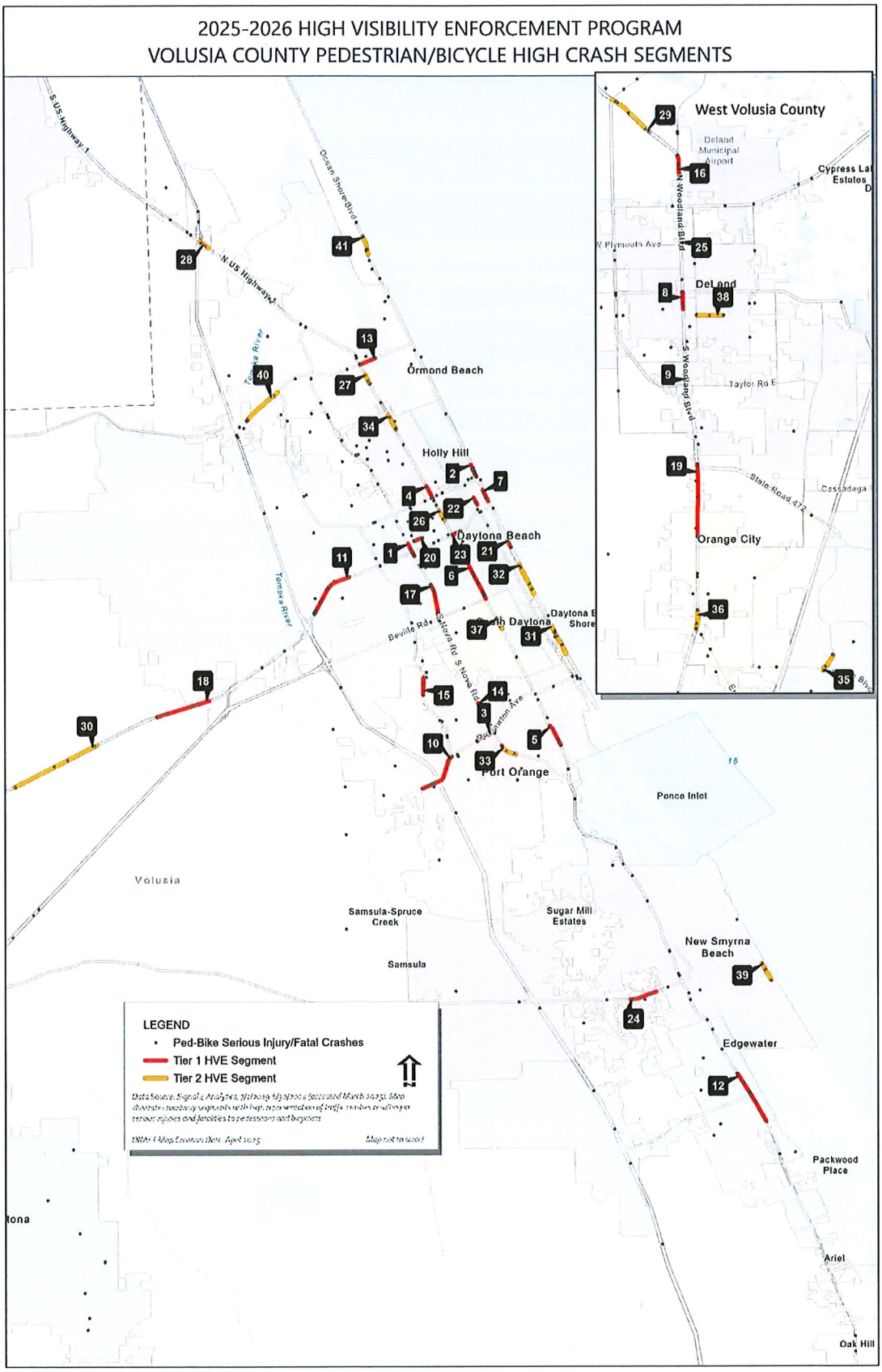

Docusign Envelope ID: C106C731-5B53-4452-B494-5A8802BEEE1F

Letter of Agreement and Contract

Execution of Agreement. This Agreement may be simultaneously executed in a minimum of two counterparts, each of which so executed shall be deemed to be an original, and such counterparts together shall constitute one in the same instrument.

University of North Florida Training and Services Institute, Inc.
d/b/a Institute of Police Technology and Management

George Androuin, Assistant Vice President — Date

Cameron Pucci, Director — Date

VENDOR ACKNOWLEDGEMENT: By signing below, I certify that I have read the entire document, agree to abide by the pricing and all terms and conditions of this Letter of Agreement and Contract, and that I am authorized to sign for the Vendor.

Vendor Name: City of Port Orange

Address: 4545 South Clyde Morris Blvd, Port Orange, FL 32129

Vendor's Authorized Agent Signature — Date

Printed Name — Title

DocuSigned by:
Chris Craig
B67DFADA5D7C4E4...
07/09/2025 | 12:23 PM EDT
FDOT APPROVAL

Docusign Envelope ID: C106C731-5B53-4452-B494-5A8802BEEE1F

Exhibit "D"

FY2025 - Subcontract Agreement Required Federal Clauses, Per Part V

i. The parties to this subcontract shall be bound by all applicable sections of Part V: Acceptance and Agreement of Project # 433144-1-8404, FDOT Contract # G3E95. A final invoice must be received by June 5, 2026 or payment will be forfeited.

ii. **Buy America Act.** The Buy America Act prohibits the use of Federal highway safety grant funds to purchase any manufactured product or software/information technology systems whose unit purchase price is $5,000 or more, including motor vehicles, that is not produced in the United States. NHTSA may waive those requirements if (1) their application would be inconsistent with the public interest; (2) such materials and products are not produced in the United States in sufficient and reasonably available quantities and of a satisfactory quality; or (3) the inclusion of domestic material will increase the cost of the overall Project contract by more than 25 percent.

iii. **Certification Regarding Federal Lobbying.** The subcontractor certifies, to the best of his or her knowledge and belief, that:

1. No Federal appropriated funds have been paid or will be paid, by or on behalf of the undersigned, to any person for influencing or attempting to influence an officer or employee of any agency, a Member of Congress, an officer or employee of Congress, or an employee of a Member of Congress in connection with the awarding of any Federal contract, the making of any Federal grant, the making of any Federal loan, the entering into of any cooperative agreement, and the extension, continuation, renewal, amendment, or modification of any Federal contract, grant, loan, or cooperative agreement.

2. If any funds other than Federal appropriated funds have been paid or will be paid to any person for influencing or attempting to influence an officer or employee of any agency, a Member of Congress, an officer or employee of Congress, or an employee of a Member of Congress in connection with this Federal contract, grant, loan, or cooperative agreement, the undersigned shall complete and submit Standard Form-LLL, "Disclosure Form to Report Lobbying," in accordance with its instructions.

3. This certification is a material representation of fact upon which reliance was placed when this transaction was made or entered into. Submission of this certification is a prerequisite for making or entering into this transaction imposed by section 31 U.S.C 1352. Any person who fails to file the required certification shall be subject to a civil penalty of not less than $10,000 and not more than $100,000 for each such failure.

iv. **Cooperation with the Inspector General.** It is the duty of every subcontractor to cooperate with the inspector general in any investigation, audit, inspection, review, or hearing pursuant to this Agreement. Section 20.055(5), F.S.

v. **DBE Assurance**. The consultant or contractor and subconsultant or subcontractor shall not discriminate on the basis of race, color, national origin, or sex in the performance of this contract. The consultant or contractor shall carry out applicable requirements of 49 CFR, Part 26 in the award and administration of USDOT-assisted contracts. Failure by the consultant or contractor to carry out these requirements is a material breach of this contract, which may result in the termination of this contract or such other remedy, as the Subrecipient or the Department deems appropriate.

Docusign Envelope ID: C106C731-5B53-4452-B494-5A8802BEEE1F

vi. **E-Verify**. Any subcontractors performing work or providing services pursuant to the subgrant agreement are required to utilize the U.S. Department of Homeland Security's E-Verify system to verify the employment eligibility of all new employees hired by the subcontractor during the term of the Agreement.

vii. **Nondiscrimination**. During the performance of this subcontract, the Subcontractor agrees:

1. To comply with all Federal nondiscrimination laws and regulations, as may be amended from time to time

2. Not to participate directly or indirectly in the discrimination prohibited by any Federal non-discrimination law or regulation, as set forth in Appendix B of 49 CFR part 21 and herein

3. To permit access to its books, records, accounts, other sources of information, and its facilities as required by the FDOT State Safety Office, USDOT, or NHTSA

4. That, in the event a Subcontractor fails to comply with any nondiscrimination provisions in this subgrant, the Subrecipient will have the right to impose such subgrant sanctions as it or NHTSA determines are appropriate, including but not limited to withholding payments to the Subcontractor under the contract/agreement until the Subcontractor complies; and/or canceling, terminating, or suspending a contract or funding agreement, in whole or in part.

viii. **Clean Air Act and Federal Water Pollution Control Act**. Subcontracts for amounts in excess of $150,000 must comply with all applicable standards, orders or regulations issued pursuant to the Clean Air Act (42 U.S.C. 7401-7671q) as amended, and the Federal Water Pollution Control Act as amended (33 U.S.C. 1251-1387) as amended. Violations must be reported to the Federal awarding agency and the Regional Office of the Environmental Protection Agency (EPA).

ix. **Integrity Certification**. The Subcontractor certifies that neither it nor its contractors are presently debarred, suspended, proposed for debarment, declared ineligible, or voluntarily excluded from participating in this Agreement by any federal department or agency. This certification is a material representation of fact upon which the Department is relying in entering this Agreement. If it is later determined that the Subcontractor knowingly rendered an erroneous certification, in addition to other remedies available to the federal government, the department or agency with which this transaction originated may pursue available remedies, including suspension and/or debarment. The Subcontractor shall provide to the Department immediate written notice if at any time the Subcontractor learns that its certification was erroneous when submitted or has become erroneous by reason of changed circumstances.

x. **Contract Work Hours and Safety Standards Act**. All subcontracts in excess of $100,000 that involve the employment of mechanics or laborers must include a provision for compliance with 40 U.S.C. 3702 and 3704, as supplemented by Department of Labor regulations (29 CFR Part 5). Under 40 U.S.C. 3702 of the Act, each contractor must be required to compute the wages of every mechanic and laborer on the basis of a standard work week of 40 hours. Work in excess of the standard work week is permissible provided that the worker is compensated at a rate of not less than one and a half times the basic rate of pay for all hours worked in excess of 40 hours in the work week. The requirements of 40 U.S.C. 3704 are applicable to construction work and provide that no laborer or mechanic must be required to work in surroundings or under working conditions which are unsanitary, hazardous or dangerous. These requirements do not apply to the purchases of supplies or materials or articles ordinarily available on the open market, or contracts for transportation or transmission of intelligence.

xi. **Indemnification and Insurance**. To the extent permitted by law and as limited by and pursuant to the provisions of Section 768.28, F.S., the Subcontractor shall indemnify and hold harmless the Subrecipient and the State of Florida, Department of Transportation, including the Department's officers and employees, from

liabilities, damages, losses and costs, including, but not limited to, reasonable attorney's fees, to the extent caused by the negligence, recklessness or intentional wrongful misconduct of the contractor/consultant and persons employed or utilized by the contractor/consultant in the performance of this Agreement. This indemnification shall survive the termination of this Agreement. Nothing contained in this paragraph is intended to nor shall it constitute a waiver of the State of Florida and the Subrecipient's sovereign immunity.

xii. **Policy on Banning Text Messaging While Driving Act**. In accordance with Executive Order 13513, Federal Leadership on Reducing Text Messaging While Driving, and DOT Order 3902.10, Text Messaging While Driving, subcontractors are encouraged to:

Adopt and enforce workplace safety policies to decrease crashes caused by distracted driving, including policies to ban text messaging while driving company-owned or rented vehicles, Government-owned, leased or rented vehicles, or privately-owned vehicles when on official business or when performing any work on behalf of the Subrecipient agency and/or the Government.

Conduct workplace safety initiatives in a manner commensurate with the size of the business, such as establishment of new rules and programs or re-evaluation of existing programs to prohibit text messaging while driving, and education, awareness, and other outreach to employees about the safety risks associated with texting and driving.

Insert the substance of this section, including this sentence, in all sub-agreement/subcontracts funded with the subaward provided under this Agreement that are $15,000 or more.

xiii. **Human Trafficking**. The Subcontractor agrees that it and its employees that perform any work on the subcontract shall not, during the term of this Agreement, engage in trafficking in persons, procure a commercial sex act, or use forced labor in the performance of work on the subcontract.

xiv. **Contracting with Small and Minority Businesses, Women's Business Enterprises, and Labor Surplus Area Firms.** The Subcontractor agrees to take the following affirmative steps to assure that minority businesses, women's business enterprise, and labor surplus are used when possible:

1. Place qualified small and minority businesses and women's business enterprises on solicitation lists;
2. Assure that small and minority businesses, and women's business enterprises are solicited whenever they are potential sources;
3. Divide total requirements, when economically feasible, into smaller tasks or quantities to permit maximum participation by small and minority businesses, and women's business enterprises;
4. Establish delivery schedules, where the requirement permits, which encourage participation by small and minority businesses, and women's business enterprises;
5. Use the services and assistance, as appropriate, of such organizations as the Small Business Administration and the Minority Business Development Agency of the Department of Commerce; and
6. Requiring the prime contractor, if subcontracts are to be let, to take the affirmative steps listed in paragraphs (b)(1) through (5) of this section.

xv. **Termination for Convenience**. In accordance with Appendix II to 2 CFR Part 200—Contract Provisions for Non-Federal Entity Contracts Under Federal Awards, either Party may terminate this Agreement for convenience upon thirty (30) calendar days' advance written notice to the other Party. Termination of this Agreement, as such, will not affect payment for services satisfactorily furnished prior to the termination.

CITY COUNCIL AGENDA ITEM

COUNCIL MEETING DATE 8/19/2025

SUBJECT: (B9) Resolution No. 25-39 - Approval of Contract #H1201 Project #4734-002-R Hurricane Idalia Hazard Mitigation Grant Program (HMGP) to Acquire and Demolish 3 Homes

DEPARTMENT: Community Development

GOAL: 1 - Public Safety; 2 - Infrastructure; 3 - Quality of Life

---

RECOMMENDED MOTION: Move to approve Contract #H1201 Project #4734-002-R Hurricane Idalia Hazard Mitigation Grant to Acquire and Demolish 3 Homes and authorize the Mayor and City Clerk to execute associated contract documents.

SUMMARY: At their April 2, 2024, meeting, the City Council approved Resolution No. 24-06 authorizing staff to submit an application to FDEM for a Hurricane Idalia HMGP grant to acquire four (4) homes at approximately $2,000,000. Prior to submitting the application, one property owner withdrew, so the application was submitted to acquire and demolish three (3) homes at a cost of $1,348,360.

On July 1, 2025, the Florida Division of Emergency Management (FDEM) provided the City with an agreement (No.H1201) to reimburse the City 75% of the cost to acquire and demolish three (3) single-family homes at 5899 Trailwood Drive, 798 Sugar House Drive, and 893 Sugar House Drive with funds from Federal Emergency Management Agency (FEMA) Hazard Mitigation Grant Program (HMGP) Project Number 4734-002-R. The HMGP assists communities in implementing hazard mitigation measures following a Presidential major disaster declaration that reduce the risk of future impacts from future disasters.

Once the properties have been purchased by the City, the homes will be demolished, and the properties will be maintained by the City as open space or can be used for stormwater improvements. At this time, the three properties are intended to be used as open space.

The Hurricane Idalia HMGP Grant Agreement (No.H1201) is for $1,062,140 in federal funds toward the purchase and demolition of the three homes with the remaining $337,090 being the City's cost share. The City's cost share was budgeted in the FY 25 Capital Improvement Plan.

The acquisition of these homes will permanently eliminate the risk of future flood damage. All acquisition activities are voluntary and conducted in compliance with 44 Code of Federal Regulation (CFR) Part 80. All activities associated with the acquisition

and demolition will be done in compliance with Federal, State and Local applicable Rules and Regulations. In addition, staff is requesting the City Manager be authorized to sign the grant agreement and all other administrative documents associated with said grant.

Once the City receives a Notice to Proceed from FDEM, the process to acquire the properties will begin. Selection of a demolition contractor in compliance with federal procurement requirements is anticipated to occur later this year. After closing on the properties, demolition will follow. Reimbursement can be requested once the properties have been demolished. It is anticipated that the project will be complete in mid-2026. The City has until April 30, 2029, to perform, if needed, in accordance with the agreement terms.

PRESENTER: Tim Burman

ATTACHMENTS:

1.	Resolution No. 25-39 w exhibit	819 Resolution No. 25-39 w exhibit.pdf
2.	4734-002-R - For Subrecipient Signature - 07-01-2025	4734-002-R - For Subrecipient Signature - 07-01-2025.pdf
3.	HMGP Idalia Acquisitions Maps	HMGP Idalia Acquisitions Maps.pdf

Amanda Bonin	Created/Initiated - 07/30/2025
Tim Burman	Approved - 08/01/2025
Linda Truitt	Approved - 08/04/2025
Shannon Balmer	Approved - 08/11/2025
Wayne Clark	Final Approval - 08/11/2025

RESOLUTION NO. 25-39

A RESOLUTION OF THE CITY COUNCIL OF THE CITY OF PORT ORANGE, VOLUSIA COUNTY, FLORIDA; ACCEPTING THE FEDERAL EMERGENCY MANAGEMENT AGENCY ("FEMA") HAZARD MITIGATION GRANT PROGRAM ("HMGP") AWARD, ADMINISTERED BY FLORIDA DIVISION OF EMERGENCY MANAGEMENT ("FDEM"), IDENTIFIED AS PROJECT NO. 4734-002-R (AGREEMENT NO. H1201) FOR THE PURPOSE OF ACQUISITION AND DEMOLITION OF APPROXIMATELY THREE HOMES LOCATED WITHIN FLOOD ZONE X AREA; AUTHORIZING THE CITY MANAGER TO EXECUTE THE GRANT AGREEMENT AND NECESSARY DOCUMENTS RELATED TO THE FACILITATION OF THEGRANT AGREEMENT; AND PROVIDING AN EFFECTIVE DATE.

WHEREAS, the Hazard Mitigation Grant Program (HMGP) provides grants to states and local governments to implement long-term hazard mitigation measures after a major disaster declaration; and

WHEREAS, the City of Port Orange ("City") has been awarded funding through the Federal Emergency Management Agency's (FEMA) Hazard Mitigation Grant Program (HMGP), administered by the Florida Division of Emergency Management (FDEM), under Project No.4734-002-R (Agreement No. H1201), hereinafter "Grant"; and

WHEREAS, HMGP provides funding for technically feasible, cost-effective, activities that reduce or eliminate long-term risk to people and property from natural disasters; and

WHEREAS, the properties located at 5899 Trailwood Drive, 798 Sugar House Drive, and 893 Sugar House Drive have sustained heavy flood damage on numerous occasions; and

WHEREAS, the owners of the properties located at 5899 Trailwood Drive, 798 Sugar House Drive, and 893 Sugar House Drive voluntarily elect to participate in the Hazard Mitigation Grant Program; and

WHEREAS, on April 2, 2024, the City Council approved Resolution No. 24-06 authorizing staff to submit an application to FDEM for a Hurricane Idalia HMGP grant for acquisition and demolition of four (4) homes at cost of approximately $2,000,000; and

WHEREAS, prior to submitting the application, one property owner withdrew, and the application was submitted to acquire and demolish three (3) homes at a cost of $1,348,360; and

WHEREAS, the Florida Division of Emergency Management has provided a Grant agreement (Project No.4734-002-R (Agreement No. H1201)) for funds in the amount of $ 1,062,140 (federal cost share), a copy of which is attached to this resolution and marked as **Exhibit "A"** and made a part hereof by reference; and

WHEREAS, City of Port Orange, has identified funding sources for the City's cost share of $337,090; and

WHEREAS, after a review of the Grant conditions and requirements, the City of Port Orange has determined that applying for the Grant serves the overall interests of the City.

NOW, THEREFORE, BE IT RESOLVED BY THE CITY COUNCIL OF THE CITY OF PORT ORANGE, VOLUSIA COUNTY, FLORIDA:

Section 1. That the foregoing "WHEREAS" clauses are ratified and confirmed as being true and correct and are incorporated in this Resolution.

Section 2. The City Council of the City of Port Orange, Florida, hereby approves the terms, conditions and requirements of the Grant.

Section 3. The City Manager is authorized to execute the Grant agreement and any required documents necessary to effectuate the intent of this Resolution, including administrative actions for compliance, reporting, and reimbursement.

Section 4. That this Resolution shall be in full force and effect immediately upon its passage and adoption.

_____
MAYOR SCOTT STILTNER

ATTEST:

_____
Robin L. Fenwick, MMC CITY CLERK

Adopted on the day of

Reviewed and Approved: _____
Shannon K. Balmer, Senior Assistant City Attorney

EXHIBIT "A"

SUB-RECIPIENT AGREEMENT CHECKLIST

DIVISION OF EMERGENCY MANAGEMENT
MITIGATION BUREAU
FISCAL OPERATIONS UNIT
HMGP

REQUEST FOR REVIEW AND APPROVAL	
SUB-RECIPIENT:	City of Port Orange
PROJECT #:	4734-002-R
PROJECT TITLE:	City of Port Orange, Flood-Prone Homes, Acquisition
CONTRACT #:	H1201
MODIFICATION #:	N/A

SUB-RECIPIENT REPRESENTATIVE (POINT OF CONTACT)
Valerie Duhl, P.E. Community Development Engineer 1000 City Center Circle Port Orange, Florida 32129

Enclosed is your copy of the proposed contract/modification between **City of Port Orange** and the Florida Division of Emergency Management (FDEM).

	COMPLETE
☐	This form is required to be included with all Reviews, Approvals, and Submittals
☐	Reviewed and Approved
☐	Signed & Dated Electronic Copy by Official Representative
☐	**Copy of the organization's resolution or charter** that specifically identifies the person or position that is authorized to sign, if not Chairman, Mayor, or Chief
☐	Attachment I - Federal Funding Accountability and Transparency Act (FFATA) - completed, signed, and dated ☐ N/A for Modifications or State Funded Agreements
☐	Attachment K – Certification Regarding Lobbying - completed, signed, and dated ☐ N/A for Modifications or State Funded Agreements
☐	Attachment L – FACTS - completed, signed, and dated ☐ N/A for Modifications or State Funded Agreements
☐	Attachment M – Foreign County of Concern Affivadit completed, signed, and dated ☐ N/A for Modifications or State Funded Agreements
☐	Electronic Submittal to the Grant Specialist

If you have any questions regarding this contract, or who is authorized to sign it, please contact your Project Manager at (618) 619-8015 or email me at Hannah.Abbott@em.myflorida.com.

Agreement Number: **H1201**

Project Number: **4734-002-R**

FEDERALLY-FUNDED SUBAWARD AND GRANT AGREEMENT

2 C.F.R. §200.1 states that a "subaward may be provided through any form of legal agreement, including an agreement that the pass-through entity considers a contract."

As defined by 2 C.F.R. §200.1, "pass-through entity" means "a non-Federal entity that provides a subaward to a subrecipient to carry out part of a Federal program."

As defined by 2 C.F.R. §200.1, "Sub-Recipient" means "an entity, usually but not limited to non-Federal entities that receives a subaward from a pass-through entity to carry out part of a Federal program."

As defined by 2 C.F.R. §200.1, "Federal award" means "Federal financial assistance that a non-Federal entity receives directly from a Federal awarding agency or indirectly from a pass-through entity."

As defined by 2 C.F.R. §200.1, "subaward" means "an award provided by a pass-through entity to a Sub-Recipient for the Sub-Recipient to carry out part of a Federal award received by the pass-through entity."

The following information is provided pursuant to 2 C.F.R. §200.332:

Sub-Recipient's name:	City of Port Orange
Sub-Recipient's unique entity identifier (UEI/FEIN):	LV8ZD1LYF3H4 / 59-6000412
Federal Award Identification Number (FAIN):	FEMA-DR-4734-FL
Federal Award Date:	April 14, 2025
Subaward Period of Performance Start and End Date:	January 15, 2024 – April 30, 2029
Amount of Federal Funds Obligated by this Agreement:	$1,062,140.00
Total Amount of Federal Funds Obligated to the Sub-Recipient by the pass-through entity to include this Agreement:	$1,062,140.00
Total Amount of the Federal Award committed to the Sub-Recipient by the pass-through entity	$1,062,140.00
Federal award project description (see FFATA):	Acquisition
Name of Federal awarding agency:	Federal Emergency Management Agency
Name of pass-through entity:	FL Division of Emergency Management
Contact information for the pass-through entity:	Hannah.Abbott@em.myflorida.com
Catalog of Federal Domestic Assistance (CFDA) Number and Name:	97.039 Hazard Mitigation Grant Program
Whether the award is R&D:	N/A
Indirect cost rate for the Federal award:	N/A

THIS AGREEMENT is entered into by the State of Florida, Division of Emergency Management, with headquarters in Tallahassee, Florida (hereinafter referred to as the "Division"), and the City of Port Orange, (hereinafter referred to as the "Sub-Recipient").

For the purposes of this Agreement, the Division serves as the pass-through entity for a Federal award, and the Sub-Recipient serves as the recipient of a subaward.

THIS AGREEMENT IS ENTERED INTO BASED ON THE FOLLOWING REPRESENTATIONS:

A. The Sub-Recipient represents that it is fully qualified and eligible to receive these grant funds to provide the services identified herein;

B. The State of Florida received these grant funds from the Federal government, and the Division has the authority to subgrant these funds to the Sub-Recipient upon the terms and conditions outlined below; and,

C. The Division has statutory authority to disburse the funds under this Agreement.

THEREFORE, the Division and the Sub-Recipient agree to the following:

(1) APPLICATION OF STATE LAW TO THIS AGREEMENT

2 C.F.R. §200.302(a) provides: “Each state must expend and account for the Federal award in accordance with state laws and procedures for expending and accounting for the state's own funds.” Therefore, section 215.971, Florida Statutes, entitled “Agreements funded with federal or state assistance”, applies to this Agreement.

(2) LAWS, RULES, REGULATIONS AND POLICIES

a. The Sub-Recipient's performance under this Agreement is subject to 2 C.F.R. Part 200, entitled “Uniform Administrative Requirements, Cost Principles, and Audit Requirements for Federal Awards.”

b. As required by section 215.971(1), Florida Statutes, this Agreement includes:

i. A provision specifying a scope of work that clearly establishes the tasks that the Sub-Recipient is required to perform.

ii. A provision dividing the agreement into quantifiable units of deliverables that must be received and accepted in writing by the Division before payment. Each deliverable must be directly related to the scope of work and specify the required minimum level of service to be performed and the criteria for evaluating the successful completion of each deliverable.

iii. A provision specifying the financial consequences that apply if the Sub-Recipient fails to perform the minimum level of service required by the agreement.

iv. A provision specifying that the Sub-Recipient may expend funds only for allowable costs resulting from obligations incurred during the specified agreement period.

v. A provision specifying that any balance of unobligated funds which has been advanced or paid must be refunded to the Division.

vi. A provision specifying that any funds paid in excess of the amount to which the Sub-Recipient is entitled under the terms and conditions of the agreement must be refunded to the Division.

c. In addition to the foregoing, the Sub-Recipient and the Division shall be governed by all applicable State and Federal laws, rules and regulations, including those identified in Attachment B. Any express reference in this Agreement to a particular statute, rule, or regulation in no way implies that no other statute, rule, or regulation applies.

(3) CONTACT

a. In accordance with section 215.971(2), Florida Statutes, the Division's Grant Manager shall be responsible for enforcing performance of this Agreement's terms and conditions and shall serve as the Division's liaison with the Sub-Recipient. As part of his/her duties, the Grant Manager for the Division shall:

i. Monitor and document Sub-Recipient performance; and,

ii. Review and document all deliverables for which the Sub-Recipient requests payment.

b. The Division's Grant Manager for this Agreement is:

Hannah Abbott
Project Manager
Bureau of Mitigation
Florida Division of Emergency Management
2555 Shumard Oak Blvd.
Tallahassee, FL 32399-2100
Telephone: 618-619-8015
Email: Hannah.Abbott@em.myflorida.com

The Division's Alternate Grant Manager for this Agreement is:

Kathleen Marshall
Community Program Manager
Bureau of Mitigation
Florida Division of Emergency Management
2555 Shumard Oak Boulevard
Tallahassee, FL 32399
Telephone: 850-815-4503
Email: Kathleen.Marshall@em.myflorida.com

1. The name and address of the Representative of the Sub-Recipient responsible for the administration of this Agreement is:

Valerie Duhl, P.E.
1000 City Center Circle
Port Orange, Florida 32129
Telephone: 386-506-5664
Email: vduhl@port-orange.org

2. In the event that different representatives or addresses are designated by either party after execution of this Agreement, notice of the name, title and address of the new representative will be provided to the other party.

(4) TERMS AND CONDITIONS

This Agreement contains all the terms and conditions agreed upon by the parties.

(5) EXECUTION

This Agreement may be executed in any number of counterparts, any one of which may be taken as an original.

(6) MODIFICATION

Either party may request modification of the provisions of this Agreement. Changes which are agreed upon shall be valid only when in writing, signed by each of the parties, and attached to the original of this Agreement.

(7) SCOPE OF WORK

The Sub-Recipient shall perform the work in accordance with the Budget and Scope of Work, Attachment A of this Agreement.

(8) PERIOD OF AGREEMENT

This Agreement shall begin on January 15, 2024, and shall end on April 30, 2029, unless terminated earlier in accordance with the provisions of Paragraph (17) of this Agreement. Consistent with the definition of "period of performance" contained in 2 C.F.R. §200.1, the term "period of agreement" refers to the time during which the Sub-Recipient "may incur new obligations to carry out the work authorized under" this Agreement. In accordance with section 215.971(1)(d), Florida Statutes, the Sub-Recipient may expend funds authorized by this Agreement "only for allowable costs resulting from obligations incurred during" the period of agreement.

The terms of this Agreement are intended to encompass the Pre-Award period. If applicable, the Pre-Award period and FEMA approved Pre-Award costs shall be outlined in Attachment A of this Agreement ("Budget and Scope of Work").

(9) FUNDING

a. This is a cost-reimbursement Agreement, subject to the availability of funds.

b. The State of Florida's performance and obligation to pay under this Agreement is contingent upon an annual appropriation by the Legislature, and subject to any modification in accordance with either chapter 216, Florida Statutes, or the Florida Constitution.

c. The Division will reimburse the Sub-Recipient only for allowable costs incurred by the Sub-Recipient in the successful completion of each deliverable. The maximum reimbursement amount for each deliverable is outlined in Attachment A of this Agreement ("Budget and Scope of Work"). The maximum reimbursement amount for the entirety of this Agreement is **$1,062,140.00**.

d. As required by 2 C.F.R. §200.415(a), any request for payment under this Agreement must include a certification, signed by an official who is authorized to legally bind the Sub-Recipient, which reads as follows: "By signing this report, I certify to the best of my knowledge and belief that the report is true, complete, and accurate, and the expenditures, disbursements and cash receipts are for the purposes and objectives set forth in the terms and conditions of the Federal award. I am aware that any false, fictitious, or fraudulent information, or the omission of any material fact, may subject me to criminal, civil or administrative penalties for fraud, false statements, false claims or otherwise. (U.S. Code Title 18, Section 1001 and Title 31, Sections 3729-3730 and 3801-3812)."

e. The Division will review any request for reimbursement by comparing the documentation provided by the Sub-Recipient against a performance measure, outlined in Attachment A, that clearly delineates:

i. The required minimum acceptable level of service to be performed; and,

ii. The criteria for evaluating the successful completion of each deliverable.

f. The performance measure required by section 215.971(1)(b), Florida Statutes, remains consistent with the requirement for a "performance goal", which is defined in 2 C.F.R. §200.1 as "a target level of performance expressed as a tangible, measurable objective, against which actual achievement can be compared." It also remains consistent with the requirement, contained in 2 C.F.R. §200.329, that the Division and the Sub-Recipient "relate financial data to performance goals and objectives of the Federal award."

g. If authorized by the Federal Awarding Agency, then the Division will reimburse the Sub-Recipient for overtime expenses in accordance with 2 C.F.R. §200.430 ("Compensation—personal services") and 2 C.F.R. §200.431 ("Compensation—fringe benefits"). If the Sub-Recipient seeks reimbursement for overtime expenses for periods when no work is performed due to vacation, holiday, illness, failure of the employer to provide sufficient work, or other similar cause (*See* 29 U.S.C. §207(e)(2)), then the Division will treat the expense as a fringe benefit. 2 C.F.R. §200.431(a) defines fringe benefits as "allowances and services provided by employers to their employees as compensation in addition to regular salaries and wages." Fringe benefits are allowable under this Agreement as long as

the benefits are reasonable and are required by law, Sub-Recipient-employee agreement, or an established policy of the Sub-Recipient. 2 C.F.R. §200.431(b) provides that the cost of fringe benefits in the form of regular compensation paid to employees during periods of authorized absences from the job, such as for annual leave, family-related leave, sick leave, holidays, court leave, military leave, administrative leave, and other similar benefits, are allowable if all of the following criteria are met:

i. They are provided under established written leave policies;

ii. The costs are equitably allocated to all related activities, including Federal awards; and,

iii. The accounting basis (cash or accrual) selected for costing each type of leave is consistently followed by the non-Federal entity or specified grouping of employees.

h. If authorized by the Federal Awarding Agency, then the Division will reimburse the Sub-Recipient for travel expenses in accordance with 2 C.F.R. §200.474. As required by the Reference Guide for State Expenditures, reimbursement for travel must be in accordance with section 112.061, Florida Statutes, which includes submission of the claim on the approved state travel voucher. If the Sub-Recipient seeks reimbursement for travel costs that exceed the amounts stated in section 112.061(6)(b), Florida Statutes ($6 for breakfast, $11 for lunch, and $19 for dinner), then the Sub-Recipient must provide documentation that:

i. The costs are reasonable and do not exceed charges normally allowed by the Sub-Recipient in its regular operations as a result of the Sub-Recipient's written travel policy; and,

ii. Participation of the individual in the travel is necessary to the Federal award.

i. The Division's grant manager, as required by section 215.971(2)(c), Florida Statutes, shall reconcile and verify all funds received against all funds expended during the grant agreement period and produce a final reconciliation report. The final report must identify any funds paid in excess of the expenditures incurred by the Sub-Recipient.

j. As defined by 2 C.F.R. §200.1, the term "improper payment" means or includes:

i. Any payment that should not have been made or that was made in an incorrect amount (including overpayments and underpayments) under statutory, contractual, administrative, or other legally applicable requirements; and,

ii. Any payment to an ineligible party, any payment for an ineligible good or service, any duplicate payment, any payment for a good or service not received (except for such payments where authorized by law), any payment that does not account for credit for applicable discounts, and any payment where insufficient or lack of documentation prevents a reviewer from discerning whether a payment was proper.

k. No reimbursements shall be made for costs outside the period of agreement, as defined in paragraph (8) of this Agreement.

(10) <u>RECORDS</u>

a. As required by 2 C.F.R. §200.336, the Federal awarding agency, Inspectors General, the Comptroller General of the United States, and the Division, or any of their authorized representatives, shall enjoy the right of access to any documents, papers, or other records of the Sub-Recipient which are pertinent to the Federal award, in order to make audits, examinations, excerpts, and transcripts. The right of access also includes timely and reasonable access to the Sub-Recipient's personnel for the purpose of interview and discussion related to such documents. Finally, the right of access is not limited to the required retention period but lasts as long as the records are retained.

b. As required by 2 C.F.R. §200.332(a)(5), the Division, the Chief Inspector General of the State of Florida, the Florida Auditor General, or any of their authorized representatives, shall enjoy the right of access to any documents, financial statements, papers, or other records of the Sub-Recipient which are pertinent to this Agreement, in order to make audits, examinations, excerpts, and transcripts. The right of access also includes timely and reasonable access to the Sub-Recipient's personnel for the purpose of interview and discussion related to such documents.

c. As required by Florida Department of State's record retention requirements (Chapter 119, Florida Statutes) and by 2 C.F.R. §200.334, the Sub-Recipient shall retain sufficient records to show its compliance with the terms of this Agreement, as well as the compliance of all subcontractors or consultants paid from funds under this Agreement, for a period of five (5) years from the date of submission of the final expenditure report. The following are the only exceptions to the five (5) year requirement:

i. If any litigation, claim, or audit is started before the expiration of the 5-year period, then the records must be retained until all litigation, claims, or audit findings involving the records have been resolved and final action taken.

ii. When the Division or the Sub-Recipient is notified in writing by the Federal awarding agency, cognizant agency for audit, oversight agency for audit, cognizant agency for indirect costs, or pass-through entity to extend the retention period.

iii. Records for real property and equipment acquired with Federal funds must be retained for 5 years after final disposition.

iv. When records are transferred to or maintained by the Federal awarding agency or pass-through entity, the 5-year retention requirement is not applicable to the Sub-Recipient.

v. Records for program income transactions after the period of performance. In some cases, recipients must report program income after the period of performance. Where there is such a requirement, the retention period for the records pertaining to the earning of the program income starts from the end of the non-Federal entity's fiscal year in which the program income is earned.

vi. Indirect cost rate proposals and cost allocations plans. This paragraph applies to the following types of documents and their supporting records: indirect cost rate computations or proposals, cost allocation plans, and any similar accounting computations of the rate at which a

particular group of costs is chargeable (such as computer usage chargeback rates or composite fringe benefit rates).

d. In accordance with 2 C.F.R. §200.335, the Federal awarding agency must request transfer of certain records to its custody from the Division or the Sub-Recipient when it determines that the records possess long-term retention value.

e. In accordance with 2 C.F.R. §200.336, the Division must always provide or accept paper versions of Agreement information to and from the Sub-Recipient upon request. If paper copies are submitted, then the Division must not require more than an original and two copies. When original records are electronic and cannot be altered, there is no need to create and retain paper copies. When original records are paper, electronic versions may be substituted through the use of duplication or other forms of electronic media provided that they are subject to periodic quality control reviews, provide reasonable safeguards against alteration, and remain readable.

f. As required by 2 C.F.R. §200.303, the Sub-Recipient shall take reasonable measures to safeguard protected personally identifiable information and other information the Federal awarding agency or the Division designates as sensitive or the Sub-Recipient considers sensitive consistent with applicable Federal, state, local, and tribal laws regarding privacy and obligations of confidentiality.

g. Florida's Government in the Sunshine Law (Section 286.011, Florida Statutes) provides the citizens of Florida with a right of access to governmental proceedings and mandates three, basic requirements: (1) meetings of public boards or commissions must be open to the public; (2) reasonable notice of such meetings must be given; and, (3) minutes of the meetings must be taken and promptly recorded. The mere receipt of public funds by a private entity, standing alone, is insufficient to bring that entity within the ambit of the open government requirements. However, the Government in the Sunshine Law applies to private entities that provide services to governmental agencies and that act on behalf of those agencies in the agencies' performance of their public duties. If a public agency delegates the performance of its public purpose to a private entity, then, to the extent that private entity is performing that public purpose, the Government in the Sunshine Law applies. For example, if a volunteer fire department provides firefighting services to a governmental entity and uses facilities and equipment purchased with public funds, then the Government in the Sunshine Law applies to board of directors for that volunteer fire department. Thus, to the extent that the Government in the Sunshine Law applies to the Sub-Recipient based upon the funds provided under this Agreement, the meetings of the Sub-Recipient's governing board or the meetings of any subcommittee making recommendations to the governing board may be subject to open government requirements. These meetings shall be publicly noticed, open to the public, and the minutes of all the meetings shall be public records, available to the public in accordance with chapter 119, Florida Statutes.

h. Florida's Public Records Law provides a right of access to the records of the state and local governments as well as to private entities acting on their behalf. Unless specifically exempted

from disclosure by the Legislature, all materials made or received by a governmental agency (or a private entity acting on behalf of such an agency) in conjunction with official business which are used to perpetuate, communicate, or formalize knowledge qualify as public records subject to public inspection. The mere receipt of public funds by a private entity, standing alone, is insufficient to bring that entity within the ambit of the public record requirements. However, when a public entity delegates a public function to a private entity, the records generated by the private entity's performance of that duty become public records. Thus, the nature and scope of the services provided by a private entity determine whether that entity is acting on behalf of a public agency and is therefore subject to the requirements of Florida's Public Records Law.

i. The Sub-Recipient shall maintain all records for the Sub-Recipient and for all subcontractors or consultants to be paid from funds provided under this Agreement, including documentation of all program costs, in a form sufficient to determine compliance with the requirements and objectives of the Budget and Scope of Work - Attachment A - and all other applicable laws and regulations.

IF THE CONTRACTOR HAS QUESTIONS REGARDING THE APPLICATION OF CHAPTER 119, FLORIDA STATUTES, TO THE CONTRACTOR'S DUTY TO PROVIDE PUBLIC RECORDS RELATING TO THIS CONTRACT, CONTACT THE CUSTODIAN OF PUBLIC RECORDS AT: (850) 815-7671 Records@em.myflorida.com, or 2555 Shumard Oak Boulevard, Tallahassee, FL 32399.

(11) AUDITS

a. The Sub-Recipient shall comply with the audit requirements contained in 2 C.F.R. Part 200, Subpart F.

b. In accounting for the receipt and expenditure of funds under this Agreement, the Sub-Recipient shall follow Generally Accepted Accounting Principles ("GAAP"). As defined by 2 C.F.R. §200.1, GAAP "has the meaning specified in accounting standards issued by the Government Accounting Standards Board (GASB) and the Financial Accounting Standards Board (FASB)."

c. When conducting an audit of the Sub-Recipient's performance under this Agreement, the Division shall use Generally Accepted Government Auditing Standards ("GAGAS"). As defined by 2 C.F.R. §200.1, GAGAS, "also known as the Yellow Book, means generally accepted government auditing standards issued by the Comptroller General of the United States, which are applicable to financial audits."

d. If an audit shows that all or any portion of the funds disbursed were not spent in accordance with the conditions of this Agreement, the Sub-Recipient shall be held liable for reimbursement to the Division of all funds not spent in accordance with these applicable regulations and

Agreement provisions within thirty (30) days after the Division has notified the Sub-Recipient of such non-compliance.

e. The Sub-Recipient shall have all audits completed by an independent auditor, which is defined in section 215.97(2)(i), Florida Statutes, as "an independent certified public accountant licensed under chapter 473." The independent auditor shall state that the audit complied with the applicable provisions noted above. The audit must be received by the Division no later than nine months from the end of the Sub-Recipient's fiscal year.

f. The Sub-Recipient shall send copies of reporting packages for audits conducted in accordance with 2 C.F.R. Part 200, by or on behalf of the Sub-Recipient, to the Division at the following address:

DEMSingle_Audit@em.myflorida.com

OR

Office of the Inspector General

2555 Shumard Oak Boulevard

Tallahassee, Florida 32399-2100

g. The Sub-Recipient shall send the Single Audit reporting package and Form SF-SAC to the Federal Audit Clearinghouse by submission online at:

http://harvester.census.gov/fac/collect/ddeindex.html

h. The Sub-Recipient shall send any management letter issued by the auditor to the Division at the following address:

DEMSingle_Audit@em.myflorida.com

OR

Office of the Inspector General

2555 Shumard Oak Boulevard

Tallahassee, Florida 32399-2100

(12) REPORTS

a. Consistent with 2 C.F.R. §200.328, the Sub-Recipient shall provide the Division with quarterly reports and a close-out report. These reports shall include the current status and progress by the Sub-Recipient and all subcontractors in completing the work described in the Scope of Work and the expenditure of funds under this Agreement, in addition to any other information requested by the Division.

b. Quarterly reports are due to the Division no later than fifteen (15) days after the end of each quarter of the program year and shall be sent each quarter until submission of the administrative close-out report. The ending dates for each quarter of the program year are March 31, June 30, September 30, and December 31.

c. The close-out report is due sixty (60) days after termination of this Agreement or sixty (60) days after completion of the activities contained in this Agreement, whichever first occurs.

d. If all required reports and copies are not sent to the Division or are not completed in a manner acceptable to the Division, then the Division may withhold further payments until they are completed or may take other action as stated in Paragraph (16) REMEDIES. "Acceptable to the Division" means that the work product was completed in accordance with the Budget and Scope of Work.

e. The Sub-Recipient shall provide additional program updates or information that may be required by the Division.

f. The Sub-Recipient shall provide additional reports and information identified in Attachment F.

(13) MONITORING

a. The Sub-Recipient shall monitor its performance under this Agreement, as well as that of its subcontractors and/or consultants who are paid from funds provided under this Agreement, to ensure that time schedules are being met, the Schedule of Deliverables and Scope of Work are being accomplished within the specified time periods, and other performance goals are being achieved. A review shall be done for each function or activity in Attachment A to this Agreement and reported in the quarterly report.

b. In addition to reviews of audits, monitoring procedures may include, but not be limited to, on-site visits by Division staff, limited scope audits, and/or other procedures. The Sub-Recipient agrees to comply and cooperate with any monitoring procedures/processes deemed appropriate by the Division. In the event that the Division determines that a limited scope audit of the Sub-Recipient is appropriate, the Sub-Recipient agrees to comply with any additional instructions provided by the Division to the Sub-Recipient regarding such audit. The Sub-Recipient further agrees to comply and cooperate with any inspections, reviews, investigations or audits deemed necessary by the Florida Chief Financial Officer or Auditor General. In addition, the Division will monitor the performance and financial management by the Sub-Recipient throughout the contract term to ensure timely completion of all tasks.

(14) LIABILITY

a. Unless Sub-Recipient is a State agency or subdivision, as defined in section 768.28(2), Florida Statutes, the Sub-Recipient is solely responsible to parties it deals with in carrying out the terms of this Agreement and, as authorized by section 768.28(19), Florida Statutes, Sub-Recipient shall hold the Division harmless against all claims of whatever nature by third parties arising from the work performance under this Agreement. For purposes of this Agreement, Sub-Recipient agrees that it is not an employee or agent of the Division, but is an independent contractor.

b. As required by section 768.28(19), Florida Statutes, any Sub-Recipient which is a state agency or subdivision, as defined in section 768.28(2), Florida Statutes, agrees to be fully responsible for its negligent or tortious acts or omissions which result in claims or suits against the

Division, and agrees to be liable for any damages proximately caused by the acts or omissions to the extent set forth in section 768.28, Florida Statutes. Nothing herein is intended to serve as a waiver of sovereign immunity by any Sub-Recipient to which sovereign immunity applies. Nothing herein shall be construed as consent by a state agency or subdivision of the State of Florida to be sued by third parties in any matter arising out of any contract.

(15) DEFAULT

If any of the following events occur ("Events of Default"), all obligations on the part of the Division to make further payment of funds shall terminate and the Division has the option to exercise any of its remedies set forth in Paragraph (16); however, the Division may make payments or partial payments after any Events of Default without waiving the right to exercise such remedies, and without becoming liable to make any further payment if:

a. Any warranty or representation made by the Sub-Recipient in this Agreement or any previous agreement with the Division is or becomes false or misleading in any respect, or if the Sub-Recipient fails to keep or perform any of the obligations, terms or covenants in this Agreement or any previous agreement with the Division and has not cured them in timely fashion, or is unable or unwilling to meet its obligations under this Agreement;

b. Material adverse changes occur in the financial condition of the Sub-Recipient at any time during the term of this Agreement, and the Sub-Recipient fails to cure this adverse change within thirty (30) days from the date written notice is sent by the Division;

c. Any reports required by this Agreement have not been submitted to the Division or have been submitted with incorrect, incomplete or insufficient information; or,

d. The Sub-Recipient has failed to perform and complete on time any of its obligations under this Agreement.

(16) REMEDIES

If an Event of Default occurs, then the Division shall, after thirty (30) calendar days written notice to the Sub-Recipient and upon the Sub-Recipient's failure to cure within those thirty (30) days, exercise any one or more of the following remedies, either concurrently or consecutively:

a. Terminate this Agreement, provided that the Sub-Recipient is given at least thirty (30) days prior written notice of the termination. The notice shall be effective when placed in the United States, first class mail, postage prepaid, by registered or certified mail-return receipt requested, to the address in paragraph (3) herein;

b. Begin an appropriate legal or equitable action to enforce performance of this Agreement;

c. Withhold or suspend payment of all or any part of a request for payment;

d. Require that the Sub-Recipient refund to the Division any monies used for ineligible purposes under the laws, rules and regulations governing the use of these funds.

e. Exercise any corrective or remedial actions, to include but not be limited to:

i. Request additional information from the Sub-Recipient to determine the reasons for or the extent of non-compliance or lack of performance,

ii. Issue a written warning to advise that more serious measures may be taken if the situation is not corrected,

iii. Advise the Sub-Recipient to suspend, discontinue or refrain from incurring costs for any activities in question or

iv. Require the Sub-Recipient to reimburse the Division for the amount of costs incurred for any items determined to be ineligible;

f. Exercise any other rights or remedies which may be available under law.

Pursuing any of the above remedies will not stop the Division from pursuing any other remedies in this Agreement or provided at law or in equity. If the Division waives any right or remedy in this Agreement or fails to insist on strict performance by the Sub-Recipient, it will not affect, extend or waive any other right or remedy of the Division, or affect the later exercise of the same right or remedy by the Division for any other default by the Sub-Recipient.

(17) TERMINATION

a. The Division may terminate this Agreement for cause after thirty (30) days written notice. Cause can include misuse of funds, fraud, lack of compliance with applicable rules, laws and regulations, failure to perform on time, and refusal by the Sub-Recipient to permit public access to any document, paper, letter, or other material subject to disclosure under chapter 119, Florida Statutes, as amended.

b. The Division may terminate this Agreement for convenience or when it determines, in its sole discretion that continuing the Agreement would not produce beneficial results in line with the further expenditure of funds, by providing the Sub-Recipient with thirty (30) calendar day's prior written notice.

c. The parties may agree to terminate this Agreement for their mutual convenience through a written amendment of this Agreement. The amendment will state the effective date of the termination and the procedures for proper closeout of the Agreement.

d. In the event that this Agreement is terminated, the Sub-Recipient will not incur new obligations for the terminated portion of the Agreement after the Sub-Recipient has received the notification of termination. The Sub-Recipient will cancel as many outstanding obligations as possible. Costs incurred after receipt of the termination notice will be disallowed. The Sub-Recipient shall not be relieved of liability to the Division because of any breach of Agreement by the Sub-Recipient. The

Division may, to the extent authorized by law, withhold payments to the Sub-Recipient for the purpose of set-off until the exact amount of damages due the Division from the Sub-Recipient is determined.

(18) PROCUREMENT

a. The Sub-Recipient shall ensure that any procurement involving funds authorized by the Agreement complies with all applicable federal and state laws and regulations, to include 2 C.F.R. §§200.318 through 200.327 as well as Appendix II to 2 C.F.R. Part 200 (entitled "Contract Provisions for Non-Federal Entity Contracts Under Federal Awards").

b. As required by 2 C.F.R. §200.318(i), the Sub-Recipient shall "maintain records sufficient to detail the history of procurement. These records will include, but are not necessarily limited to the following: rationale for the method of procurement, selection of contract type, contractor selection or rejection, and the basis for the contract price."

c. As required by 2 C.F.R. §200.318(b), the Sub-Recipient shall "maintain oversight to ensure that contractors perform in accordance with the terms, conditions, and specifications of their contracts or purchase orders." In order to demonstrate compliance with this requirement, the Sub-Recipient shall document, in its quarterly report to the Division, the progress of any and all subcontractors performing work under this Agreement.

d. The Sub-Recipient agrees to include in the subcontract that (i) the subcontractor is bound by the terms of this Agreement, (ii) the subcontractor is bound by all applicable state and federal laws and regulations, and (iii) the subcontractor shall hold the Division and Sub-Recipient harmless against all claims of whatever nature arising out of the subcontractor's performance of work under this Agreement, to the extent allowed and required by law.

e. As required by 2 C.F.R. §200.318(c)(1), the Sub-Recipient shall "maintain written standards of conduct covering conflicts of interest and governing the actions of its employees engaged in the selection, award and administration of contracts."

f. As required by 2 C.F.R. §200.319(a), the Sub-Recipient shall conduct any procurement under this agreement "in a manner providing full and open competition." Accordingly, the Sub-Recipient shall not:

i. Place unreasonable requirements on firms in order for them to qualify to do business;

ii. Require unnecessary experience or excessive bonding;

iii. Use noncompetitive pricing practices between firms or between affiliated companies;

iv. Execute noncompetitive contracts to consultants that are on retainer contracts;

v. Authorize, condone, or ignore organizational conflicts of interest;

vi. Specify only a brand name product without allowing vendors to offer an equivalent;

vii. Specify a brand name product instead of describing the performance, specifications, or other relevant requirements that pertain to the commodity or service solicited by the procurement;

viii. Engage in any arbitrary action during the procurement process; or,

ix. Allow a vendor to bid on a contract if that bidder was involved with developing or drafting the specifications, requirements, statement of work, invitation to bid, or request for proposals.

g. "Except in those cases where applicable Federal statutes expressly mandate or encourage" otherwise, the Sub-Recipient, as required by 2 C.F.R. §200.319(c), shall not use a geographic preference when procuring commodities or services under this Agreement.

h. The Sub-Recipient shall conduct any procurement involving invitations to bid (i.e. sealed bids) in accordance with 2 C.F.R. §200.320(d) as well as section 287.057(1)(a), Florida Statutes.

i. The Sub-Recipient shall conduct any procurement involving requests for proposals (i.e. competitive proposals) in accordance with 2 C.F.R. §200.320(2) as well as section 287.057(1)(b), Florida Statutes.

j. For each subcontract, the Sub-Recipient shall provide a written statement to the Division as to whether that subcontractor is a minority business enterprise, as defined in section 288.703, Florida Statutes. Additionally, the Sub-Recipient shall comply with the requirements of 2 C.F.R. §200.321 ("Contracting with small and minority businesses, women's business enterprises, and labor surplus area firms").

k. If the Sub-Recipient chooses to subcontract any of the work required under this Agreement, then the Sub-Recipient shall review its competitive solicitation and subsequent contract to be awarded for compliance with the procurement standards in 2 C.F.R. §§200.318 through 200.327 and required contract provisions in Appendix II to 2 C.F.R. Part 200. If the Sub-Recipient publishes a competitive solicitation or executes a contract that is not in compliance with the Federal procurement standards in 2 C.F.R. §§200.318 through 200.327 or the requirements of Appendix II to 2 C.F.R. Part 200, then the Sub-Recipient is on notice that the Division may:

i. Terminate this Agreement in accordance with the provisions outlined in paragraph (17) above; or,

ii. Refuse to reimburse the Sub-Recipient for any costs associated with that solicitation.

l. FEMA has developed helpful resources for subgrant recipients related to compliance with the Federal procurement standards in 2 C.F.R. §§200.318 through 200.327 and required contract

provisions in Appendix II to 2 C.F.R. Part 200. These resources are generally available at https://www.fema.gov/procurement-disaster-assistance-team.

(19) ATTACHMENTS

a. All attachments to this Agreement are incorporated as if set out fully.

b. In the event of any inconsistencies or conflict between the language of this Agreement and the attachments, the language of the attachments shall control, but only to the extent of the conflict or inconsistency.

c. This Agreement has the following attachments:

i. Exhibit 1 - Funding Sources
ii. Attachment A – Budget and Scope of Work
iii. Attachment B – Program Statutes and Regulations
iv. Attachment C – Statement of Assurances
v. Attachment D – Request for Advance or Reimbursement
vi. Attachment E – Justification of Advance Payment
vii. Attachment F – Quarterly Report Form
viii. Attachment G – Warranties and Representations
ix. Attachment H – Certification Regarding Debarment
x. Attachment I – Federal Funding Accountability and Transparency Act
xi. Attachment J – Mandatory Contract Provisions
xii. Attachment K – Certification Regarding Lobbying
xiii. Attachment L – Florida Accountability Contract Tracking System
xiv. Attachment M – Foreign Country of Concern Affidavit

(20) PAYMENTS

a. Any advance payment under this Agreement is subject to 2 C.F.R. §200.305 and, as applicable, section 216.181(16), Florida Statutes. All advances are required to be held in an interest-bearing account. If an advance payment is requested, the budget data on which the request is based and a justification statement shall be included in this Agreement as Attachment E. Attachment E will specify the amount of advance payment needed and provide an explanation of the necessity for and proposed use of these funds. No advance shall be accepted for processing if a reimbursement has been paid prior to the submittal of a request for advanced payment. After the initial advance, if any, payment shall be made on a reimbursement basis as needed.

b. Invoices shall be submitted at least quarterly and shall include the supporting documentation for all costs of the project or services. The final invoice shall be submitted within sixty (60) days after the expiration date of the agreement. An explanation of any circumstances prohibiting the submittal of quarterly invoices shall be submitted to the Division grant manager as part of the Sub-Recipient's quarterly reporting as referenced in Paragraph (12) of this Agreement.

c. If the necessary funds are not available to fund this Agreement as a result of action by the United States Congress, the federal Office of Management and Budgeting, the State Chief Financial Officer or under subparagraph (9)b. of this Agreement, all obligations on the part of the Division to make any further payment of funds shall terminate, and the Sub-Recipient shall submit its closeout report within thirty (30) days of receiving notice from the Division.

(21) REPAYMENTS

a. All refunds or repayments due to the Division under this Agreement are to be made payable to the order of "Division of Emergency Management", and mailed directly to the following address:

Division of Emergency Management
Cashier
2555 Shumard Oak Boulevard
Tallahassee FL 32399-2100

b. In accordance with section 215.34(2), Florida Statutes, if a check or other draft is returned to the Division for collection, Sub-Recipient shall pay the Division a service fee of $15.00 or 5% of the face amount of the returned check or draft, whichever is greater.

(22) MANDATED CONDITIONS

a. The validity of this Agreement is subject to the truth and accuracy of all the information, representations, and materials submitted or provided by the Sub-Recipient in this Agreement, in any later submission or response to a Division request, or in any submission or response to fulfill the requirements of this Agreement. All of said information, representations, and materials are incorporated by reference. The inaccuracy of the submissions or any material changes shall, at the option of the Division and with thirty (30) days written notice to the Sub-Recipient, cause the termination of this Agreement and the release of the Division from all its obligations to the Sub-Recipient.

b. This Agreement shall be construed under the laws of the State of Florida, and venue for any actions arising out of this Agreement shall be in the Circuit Court of Leon County. If any provision of this Agreement is in conflict with any applicable statute or rule, or is unenforceable, then the provision shall be null and void to the extent of the conflict, and shall be severable, but shall not invalidate any other provision of this Agreement.

c. Any power of approval or disapproval granted to the Division under the terms of this Agreement shall survive the term of this Agreement.

d. The Sub-Recipient agrees to comply with the Americans With Disabilities Act (Public Law 101-336, 42 U.S.C. Section 12101 et seq.), which prohibits discrimination by public and private entities on the basis of disability in employment, public accommodations, transportation, State and local government services, and telecommunications.

e. Those who have been placed on the convicted vendor list following a conviction for a public entity crime or on the discriminatory vendor list may not submit a bid on a contract to provide any goods or services to a public entity, may not submit a bid on a contract with a public entity for the construction or repair of a public building or public work, may not submit bids on leases of real property to a public entity, may not be awarded or perform work as a contractor, supplier, subcontractor, or consultant under a contract with a public entity, and may not transact business with any public entity in excess of $25,000.00 for a period of 36 months from the date of being placed on the convicted vendor list or on the discriminatory vendor list.

f. Any Sub-Recipient which is not a local government or state agency, and which receives funds under this Agreement from the federal government, certifies, to the best of its knowledge and belief, that it and its principals or affiliates:

i. Are not presently debarred, suspended, proposed for debarment, declared ineligible, voluntarily excluded or disqualified from covered transactions by a federal department or agency;

ii. Have not, within a five-year period preceding this proposal been convicted of or had a civil judgment rendered against them for fraud or a criminal offense in connection with obtaining, attempting to obtain, or performing a public (federal, state or local) transaction or contract under public transaction; violation of federal or state antitrust statutes or commission of embezzlement, theft, forgery, bribery, falsification or destruction of records, making false statements, or receiving stolen property;

iii. Are not presently indicted or otherwise criminally or civilly charged by a governmental entity (federal, state or local) with commission of any offenses enumerated in paragraph (22) f. ii. of this certification; and,

iv. Have not within a five-year period preceding this Agreement had one or more public transactions (federal, state or local) terminated for cause or default.

g. **In addition, the Sub-Recipient shall send to the Division (by email or by facsimile transmission) the completed "Certification Regarding Debarment, Suspension, Ineligibility And Voluntary Exclusion" (Attachment H) for each intended subcontractor which Sub-Recipient plans to fund under this Agreement. The form must be received by the Division before the Sub-Recipient enters into a contract with any subcontractor.**

h. The Division reserves the right to unilaterally cancel this Agreement if the Sub-Recipient refuses to allow public access to all documents, papers, letters or other material subject to the provisions of chapter 119, Florida Statutes, which the Sub-Recipient created or received under this Agreement.

i. If the Sub-Recipient is allowed to temporarily invest any advances of funds under this Agreement, any interest income shall either be returned to the Division or be applied against the Division's obligation to pay the contract amount.

j. The State of Florida will not intentionally award publicly-funded contracts to any contractor who knowingly employs unauthorized alien workers, constituting a violation of the employment provisions contained in 8 U.S.C. Section 1324a(e) [Section 274A(e) of the Immigration and Nationality Act ("INA")]. The Division shall consider the employment by any contractor of unauthorized aliens a violation of Section 274A(e) of the INA. Such violation by the Sub-Recipient of the employment provisions contained in Section 274A(e) of the INA shall be grounds for unilateral cancellation of this Agreement by the Division.

k. Section 287.05805, Florida Statutes, requires that any state funds provided for the purchase of or improvements to real property are contingent upon the contractor or political subdivision granting to the state a security interest in the property at least to the amount of state funds provided for at least 5 years from the date of purchase or the completion of the improvements or as further required by law.

l. The Division may, at its option, terminate the Contract if the Contractor is found to have submitted a false certification as provided under section 287.135(5), Florida Statutes, or been placed on the Scrutinized Companies with Activities in Sudan List or the Scrutinized Companies with Activities in the Iran Petroleum Energy Sector List, or been engaged in business operations in Cuba or Syria, or to have been placed on the Scrutinized Companies that Boycott Israel List or is engaged in a boycott of Israel.

m. If applicable, pursuant to Section 255.0993, Florida Statutes, the Sub-Recipient shall ensure that any iron or steel product, as defined in Section 255.0993(1)(b), Florida Statutes, that is permanently incorporated in the deliverable(s) resulting from this project, must be produced in the United States.

(23) LOBBYING PROHIBITION

a. 2 C.F.R. §200.450 prohibits reimbursement for costs associated with certain lobbying activities.

b. Section 216.347, Florida Statutes, prohibits "any disbursement of grants and aids appropriations pursuant to a contract or grant to any person or organization unless the terms of the grant or contract prohibit the expenditure of funds for the purpose of lobbying the Legislature, the judicial branch, or a state agency."

c. No funds or other resources received from the Division under this Agreement may be used directly or indirectly to influence legislation or any other official action by the Florida Legislature or any state agency.

d. The Sub-Recipient certifies, by its signature to this Agreement, that to the best of his or her knowledge and belief:

i. No Federal appropriated funds have been paid or will be paid, by or on behalf of the Sub-Recipient, to any person for influencing or attempting to influence an officer or

employee of any agency, a Member of Congress, an officer or employee of Congress, or an employee of a Member of Congress in connection with the awarding of any Federal contract, the making of any Federal grant, the making of any Federal loan, the entering into of any cooperative agreement, and the extension, continuation, renewal, amendment or modification of any Federal contract, grant, loan or cooperative agreement.

ii. If any funds other than Federal appropriated funds have been paid or will be paid to any person for influencing or attempting to influence an officer or employee of any agency, a Member of Congress, an officer or employee of Congress, or an employee of a Member of Congress in connection with this Federal contract, grant, loan or cooperative agreement, the Sub-Recipient shall complete and submit Standard Form-LLL, "Disclosure of Lobbying Activities."

iii. The Sub-Recipient shall require that this certification be included in the award documents for all subawards (including subcontracts, subgrants, and contracts under grants, loans, and cooperative agreements) and that all Sub-Recipients shall certify and disclose.

iv. This certification is a material representation of fact upon which reliance was placed when this transaction was made or entered into. Submission of this certification is a prerequisite for making or entering into this transaction imposed by Section 1352, Title 31, U.S. Code. Any person who fails to file the required certification shall be subject to a civil penalty of not less than $10,000 and not more than $100,000 for each such failure.

(24) COPYRIGHT, PATENT AND TRADEMARK

EXCEPT AS PROVIDED BELOW, ANY AND ALL PATENT RIGHTS ACCRUING UNDER OR IN CONNECTION WITH THE PERFORMANCE OF THIS AGREEMENT ARE HEREBY RESERVED TO THE STATE OF FLORIDA; AND, ANY AND ALL COPYRIGHTS ACCRUING UNDER OR IN CONNECTION WITH THE PERFORMANCE OF THIS AGREEMENT ARE HEREBY TRANSFERRED BY THE SUB-RECIPIENT TO THE STATE OF FLORIDA.

a. If the Sub-Recipient has a pre-existing patent or copyright, the Sub-Recipient shall retain all rights and entitlements to that pre-existing patent or copyright unless the Agreement provides otherwise.

b. If any discovery or invention is developed in the course of or as a result of work or services performed under this Agreement, or in any way connected with it, the Sub-Recipient shall refer the discovery or invention to the Division for a determination whether the State of Florida will seek patent protection in its name. Any patent rights accruing under or in connection with the performance of this Agreement are reserved to the State of Florida. If any books, manuals, films, or other copyrightable material are produced, the Sub-Recipient shall notify the Division. Any copyrights accruing under or in connection with the performance under this Agreement are transferred by the Sub-Recipient to the State of Florida.

c. Within thirty (30) days of execution of this Agreement, the Sub-Recipient shall disclose all intellectual properties relating to the performance of this Agreement which he or she knows or should know could give rise to a patent or copyright. The Sub-Recipient shall retain all rights and entitlements to any pre-existing intellectual property which is disclosed. Failure to disclose will indicate that no such property exists. The Division shall then, under Paragraph (24) b., have the right to all patents and copyrights which accrue during performance of the Agreement.

d. If the Sub-Recipient qualifies as a state university under Florida law, then, pursuant to section 1004.23, Florida Statutes, any invention conceived exclusively by the employees of the Sub-Recipient shall become the sole property of the Sub-Recipient. In the case of joint inventions, that is inventions made jointly by one or more employees of both parties hereto, each party shall have an equal, undivided interest in and to such joint inventions. The Division shall retain a perpetual, irrevocable, fully-paid, nonexclusive license, for its use and the use of its contractors of any resulting patented, copyrighted or trademarked work products, developed solely by the Sub-Recipient, under this Agreement, for Florida government purposes.

(25) LEGAL AUTHORIZATION

The Sub-Recipient certifies that it has the legal authority to receive the funds under this Agreement and that its governing body has authorized the execution and acceptance of this Agreement. The Sub-Recipient also certifies that the undersigned person has the authority to legally execute and bind Sub-Recipient to the terms of this Agreement.

(26) EQUAL OPPORTUNITY EMPLOYMENT

a. In accordance with 41 C.F.R. §60-1.4(b), the Sub-Recipient hereby agrees that it will incorporate or cause to be incorporated into any contract for construction work, or modification thereof, as defined in the regulations of the Secretary of Labor at 41 C.F.R. Chapter 60, which is paid for in whole or in part with funds obtained from the Federal Government or borrowed on the credit of the Federal Government pursuant to a grant, contract, loan insurance, or guarantee, or undertaken pursuant to any Federal program involving such grant, contract, loan, insurance, or guarantee, the following equal opportunity clause:

> During the performance of this contract, the contractor agrees as follows:
>
> i. The contractor will not discriminate against any employee or applicant for employment because of race, color, religion, sex, sexual orientation, gender identity, or national origin. The contractor will take affirmative action to ensure that applicants are employed, and that employees are treated during employment without regard to their race, color, religion, sex, sexual orientation, gender identity, or national origin. Such action shall include, but not be limited to the following:

Employment, upgrading, demotion, or transfer; recruitment or recruitment advertising; layoff or termination; rates of pay or other forms of compensation; and selection for training, including apprenticeship. The contractor agrees to post in conspicuous places, available to employees and applicants for employment, notices to be provided setting forth the provisions of this nondiscrimination clause.

ii. The contractor will, in all solicitations or advertisements for employees placed by or on behalf of the contractor, state that all qualified applicants will receive considerations for employment without regard to race, color, religion, sex, sexual orientation, gender identity, or national origin.

iii. The contractor will not discharge or in any other manner discriminate against any employee or applicant for employment because such employee or applicant has inquired about, discussed, or disclosed the compensation of the employee or applicant or another employee or applicant. This provision shall not apply to instances in which an employee who has access to the compensation information of other employees or applicants as a part of such employee's essential job functions discloses the compensation of such other employees or applicants to individuals who do not otherwise have access to such information, unless such disclosure is in response to a formal complaint or charge, in furtherance of an investigation, proceeding, hearing, or action, including an investigation conducted by the employer, or is consistent with the contractor's legal duty to furnish information.

iv. The contractor will send to each labor union or representative of workers with which he has a collective bargaining agreement or other contract or understanding, a notice to be provided advising the said labor union or workers' representatives of the contractor's commitments under this section, and shall post copies of the notice in conspicuous places available to employees and applicants for employment.

v. The contractor will comply with all provisions of Executive Order 11246 of September 24, 1965, and of the rules, regulations, and relevant orders of the Secretary of Labor.

vi. The contractor will furnish all information and reports required by Executive Order 11246 of September 24, 1965, and by rules, regulations, and orders of the Secretary of Labor, or pursuant thereto, and will permit access to his books, records, and accounts by the administering agency and the Secretary of Labor for purposes of investigation to ascertain compliance with such rules, regulations, and orders.

vii. In the event of the contractor's noncompliance with the nondiscrimination clauses of this contract or with any of the said rules, regulations, or orders, this contract may be canceled, terminated, or suspended in whole or in part and the contractor may be declared ineligible for further Government contracts or federally assisted construction contracts in accordance with procedures authorized in Executive Order 11246 of September 24, 1965, and such other sanctions may be imposed and remedies invoked as provided in Executive Order

11246 of September 24, 1965, or by rule, regulation, or order of the Secretary of Labor, or as otherwise provided by law.

viii. The contractor will include the portion of the sentence immediately preceding paragraph (1) and the provisions of paragraphs (1) through (8) in every subcontract or purchase order unless exempted by rules, regulations, or orders of the Secretary of Labor issued pursuant to section 204 of Executive Order 11246 of September 24, 1965, so that such provisions will be binding upon each subcontractor or vendor. The contractor will take such action with respect to any subcontract or purchase order as the administering agency may direct as a means of enforcing such provisions, including sanctions for noncompliance:

Provided, however, that in the event a contractor becomes involved in, or is threatened with, litigation with a subcontractor or vendor as a result of such direction by the administering agency the contractor may request the United States to enter into such litigation to protect the interests of the United States.

b. The Sub-Recipient further agrees that it will be bound by the above equal opportunity clause with respect to its own employment practices when it participates in federally assisted construction work: *Provided*, that if the applicant so participating is a State or local government, the above equal opportunity clause is not applicable to any agency, instrumentality or subdivision of such government which does not participate in work on or under the contract.

c. The Sub-Recipient agrees that it will assist and cooperate actively with the administering agency and the Secretary of Labor in obtaining the compliance of contractors and subcontractors with the equal opportunity clause and the rules, regulations, and relevant orders of the Secretary of Labor, that it will furnish the administering agency and the Secretary of Labor such information as they may require for the supervision of such compliance, and that it will otherwise assist the administering agency in the discharge of the agency's primary responsibility for securing compliance.

d. The Sub-Recipient further agrees that it will refrain from entering into any contract or contract modification subject to Executive Order 11246 of September 24, 1965, with a contractor debarred from, or who has not demonstrated eligibility for, Government contracts and federally assisted construction contracts pursuant to the Executive order and will carry out such sanctions and penalties for violation of the equal opportunity clause as may be imposed upon contractors and subcontractors by the administering agency or the Secretary of Labor pursuant to Part II, Subpart D of the Executive order. In addition, the Sub-Recipient agrees that if it fails or refuses to comply with these undertakings, the administering agency may take any or all of the following actions: cancel, terminate, or suspend in whole or in part this grant (contract, loan, insurance, guarantee); refrain from extending any further assistance to the Sub-Recipient under the program with respect to which the failure or refund occurred until satisfactory assurance of future compliance has been received from such Sub-Recipient; and refer the case to the Department of Justice for appropriate legal proceedings.

(27) COPELAND ANTI-KICKBACK ACT

The Sub-Recipient hereby agrees that, unless exempt under Federal law, it will incorporate or cause to be incorporated into any contract for construction work, or modification thereof, the following clause:

i. Contractor. The contractor shall comply with 18 U.S.C. § 874, 40 U.S.C. § 3145, and the requirements of 29 C.F.R. pt. 3 as may be applicable, which are incorporated by reference into this contract.

ii. Subcontracts. The contractor or subcontractor shall insert in any subcontracts the clause above and such other clauses as the FEMA may by appropriate instructions require, and also a clause requiring the subcontractors to include these clauses in any lower tier subcontracts. The prime contractor shall be responsible for the compliance by any subcontractor or lower tier subcontractor with all of these contract clauses.

iii. Breach. A breach of the contract clauses above may be grounds for termination of the contract, and for debarment as a contractor and subcontractor as provided in 29 C.F.R. § 5.12.

(28) CONTRACT WORK HOURS AND SAFETY STANDARDS

If the Sub-Recipient, with the funds authorized by this Agreement, enters into a contract that exceeds $100,000 and involves the employment of mechanics or laborers, then any such contract must include a provision for compliance with 40 U.S.C. 3702 and 3704, as supplemented by Department of Labor regulations (29 C.F.R. Part 5). Under 40 U.S.C. 3702 of the Act, each contractor must be required to compute the wages of every mechanic and laborer on the basis of a standard work week of 40 hours. Work in excess of the standard work week is permissible provided that the worker is compensated at a rate of not less than one and a half times the basic rate of pay for all hours worked in excess of 40 hours in the work week. The requirements of 40 U.S.C. 3704 are applicable to construction work and provide that no laborer or mechanic must be required to work in surroundings or under working conditions which are unsanitary, hazardous or dangerous. These requirements do not apply to the purchases of supplies or materials or articles ordinarily available on the open market, or contracts for transportation.

(29) CLEAN AIR ACT AND THE FEDERAL WATER POLLUTION CONTROL ACT

If the Sub-Recipient, with the funds authorized by this Agreement, enters into a contract that exceeds $150,000, then any such contract must include the following provision:

Contractor agrees to comply with all applicable standards, orders or regulations issued pursuant to the Clean Air Act (42 U.S.C. 7401-7671q) and the Federal Water Pollution Control Act as amended (33 U.S.C. 1251-1387), and will report violations to FEMA and the Regional Office of the Environmental Protection Agency (EPA).

(30) SUSPENSION AND DEBARMENT

If the Sub-Recipient, with the funds authorized by this Agreement, enters into a contract, then any such contract must include the following provisions:

i. This contract is a covered transaction for purposes of 2 C.F.R. pt. 180 and 2 C.F.R. pt. 3000. As such the contractor is required to verify that none of the contractor, its principals (defined at 2 C.F.R. § 180.995), or its affiliates (defined at 2 C.F.R. § 180.905) are excluded (defined at 2 C.F.R. § 180.940) or disqualified (defined at 2 C.F.R. § 180.935).

ii. The contractor must comply with 2 C.F.R. pt. 180, subpart C and 2 C.F.R. pt. 3000, subpart C and must include a requirement to comply with these regulations in any lower tier covered transaction it enters into.

iii. This certification is a material representation of fact relied upon by the Division. If it is later determined that the contractor did not comply with 2 C.F.R. pt. 180, subpart C and 2 C.F.R. pt. 3000, subpart C, in addition to remedies available to the Division, the Federal Government may pursue available remedies, including but not limited to suspension and/or debarment.

iv. The bidder or proposer agrees to comply with the requirements of 2 C.F.R. pt. 180, subpart C and 2 C.F.R. pt. 3000, subpart C while this offer is valid and throughout the period of any contract that may arise from this offer. The bidder or proposer further agrees to include a provision requiring such compliance in its lower tier covered transactions.

(31) BYRD ANTI-LOBBYING AMENDMENT

If the Sub-Recipient, with the funds authorized by this Agreement, enters into a contract, then any such contract must include the following clause:

Byrd Anti-Lobbying Amendment, 31 U.S.C. § 1352 (as amended). Contractors who apply or bid for an award of $100,000 or more shall file the required certification. Each tier certifies to the tier above that it will not and has not used Federal appropriated funds to pay any person or organization for influencing or attempting to influence an officer or employee of any agency, a member of Congress, officer or employee of Congress, or an employee of a member of Congress in connection with obtaining any Federal contract, grant, or any other award covered by 31 U.S.C. § 1352. Each tier shall also disclose any lobbying with non-Federal funds that takes place in connection with obtaining any Federal award. Such disclosures are forwarded from tier to tier up to the recipient.

If this subgrant agreement amount is $100,000 or more, the Sub-Recipient, and subcontractors as applicable, shall sign Attachment K – Certification Regarding Lobbying.

(32) CONTRACTING WITH SMALL AND MINORITY BUSINESSES, WOMEN'S BUSINESS ENTERPRISES, AND LABOR SURPLUS AREA FIRMS

a. If the Sub-Recipient, with the funds authorized by this Agreement, seeks to procure goods or services, then, in accordance with 2 C.F.R. §200.321, the Sub-Recipient shall take the following

affirmative steps to assure that minority businesses, women's business enterprises, and labor surplus area firms are used whenever possible:

i. Placing qualified small and minority businesses and women's business enterprises on solicitation lists;

ii. Assuring that small and minority businesses, and women's business enterprises are solicited whenever they are potential sources;

iii. Dividing total requirements, when economically feasible, into smaller tasks or quantities to permit maximum participation by small and minority businesses, and women's business enterprises;

iv. Establishing delivery schedules, where the requirement permits, which encourage participation by small and minority businesses, and women's business enterprises;

v. Using the services and assistance, as appropriate, of such organizations as the Small Business Administration and the Minority Business Development Agency of the Department of Commerce; and

vi. Requiring the prime contractor, if subcontracts are to be let, to take the affirmative steps listed in paragraphs i. through v. of this subparagraph.

b. The requirement outlined in subparagraph a. above, sometimes referred to as "socioeconomic contracting," does not impose an obligation to set aside either the solicitation or award of a contract to these types of firms. Rather, the requirement only imposes an obligation to carry out and document the six affirmative steps identified above.

c. The "socioeconomic contracting" requirement outlines the affirmative steps that the Sub-Recipient must take; the requirements do not preclude the Sub-Recipient from undertaking additional steps to involve small and minority businesses and women's business enterprises.

d. The requirement to divide total requirements, when economically feasible, into smaller tasks or quantities to permit maximum participation by small and minority businesses, and women's business enterprises, does not authorize the Sub-Recipient to break a single project down into smaller components in order to circumvent the micro-purchase or small purchase thresholds so as to utilize streamlined acquisition procedures (e.g. "project splitting").

(33) ASSURANCES

The Sub-Recipient shall comply with any Statement of Assurances incorporated as Attachment C.

IN WITNESS WHEREOF, the parties hereto have executed this Agreement.

SUB-RECIPIENT: CITY OF PORT ORANGE

By: _____

Name and Title: _____

Date: _____

FEID#: _____

STATE OF FLORIDA
DIVISION OF EMERGENCY MANAGEMENT

By: _____

Name and Title: Kevin Guthrie, Director

Date: _____

EXHIBIT – 1

THE FOLLOWING FEDERAL RESOURCES ARE AWARDED TO THE SUB-RECIPIENT UNDER THIS AGREEMENT:

Federal Program
Federal agency: **Federal Emergency Management Agency: Hazard Mitigation Grant**
Catalog of Federal Domestic Assistance title and number: **97.039**
Award amount: **$1,062,140.00**

THE FOLLOWING COMPLIANCE REQUIREMENTS APPLY TO THE FEDERAL RESOURCES AWARDED UNDER THIS AGREEMENT:

- 2 C.F.R. Part 200 Uniform Administrative Requirements, Cost Principles, and Audit Requirements for Federal Awards
- The Robert T. Stafford Disaster Relief and Emergency Assistance Act, Public Law 93-288, as amended, 42 U.S.C. 5121 et seq., and Related Authorities
- Sections 1361(A) of the National Flood Insurance Act of 1968, 42 U.S.C. 4104c, as amended by the National Flood Insurance Reform Act of 1994, Public Law 103-325 and the Bunning-Bereuter-Blumenauer Flood Insurance Reform Act of 2004, Public Law 108-264
- 31 C.F.R. Part 205 Rules and Procedures for Funds Transfers

Federal Program:

1. Sub-Recipient is to use funding to perform the following eligible activities:
   - Acquisition of hazard prone properties
2. Sub-Recipient is subject to all administrative and financial requirements as set forth in this Agreement, or will be in violation of the terms of the Agreement.

Attachment A

Budget and Scope of Work

STATEMENT OF PURPOSE:

The purpose of this Scope of Work is to acquire three (3) single-family residential structures in Port Orange, Volusia County, Florida, funded through the Hazard Mitigation Grant Program (HMGP) **DR-4734-002-R**, as approved by the Florida Division of Emergency Management (Division) and the Federal Emergency Management Agency (FEMA).

The Sub-Recipient, City of Port Orange, agrees to administer and complete the project per scope of work as submitted by the Sub-Recipient and subsequently approved by the Division and FEMA. The Sub-Recipient shall complete the work in accordance with all applicable Federal, State and Local Laws, Regulations and Codes. All acquisition activities shall be voluntary and conducted in compliance with 44 CFR Part 80.

PROJECT OVERVIEW:

As a Hazard Mitigation Grant Program project, the Sub-Recipient proposes to mitigate three (3) single-family residential structures located in Port Orange, Florida, 32127, 32129.

The scope of work proposes to acquire and demolish three (3) single-family residential structures built on a slab-on-grade foundation. Demolition activities include the removal of the foundation at least one foot below the finish grade, removal of utilities, septic tank, and underground improvements. All associated debris shall be removed to an approved landfill following demolition. These properties are prone to flooding from the Halifax River during hurricanes and have experienced frequent flooding. The proposed acquisition project intends to permanently eliminate the risk of future flood damage and protect the occupants from future flood loss.

Mitigation activities shall include the removal of all associated debris to clear the site and the land to be converted into open space and deed restricted as set forth in the FEMA program requirements concerning the acquisition of property for open space [44 CFR 206.434 (e)].

The project shall provide protection against a 100-year storm event. Activities shall be completed in strict compliance with Federal, State and Local applicable Rules and Regulations.

Project Locations:

ID#	Location	Coordinates
1.	5899 Trailwood Drive, Port Orange, Florida, 32127	(29.100922, -80.986862)
2.	798 Sugar House Drive, Port Orange, Florida, 32129	(29.145480, -81.010360)
3.	893 Sugar House Drive, Port Orange, Florida, 32129	(29.147720, -81.004780)

TASKS & DELIVERABLES:

A) Tasks

1) The Sub-Recipient shall procure the services of a qualified and licensed Florida contractor and execute a contract with the selected bidder to complete the scope of work as approved by the Division and FEMA. The Sub-Recipient shall select the qualified, licensed Florida contractor in accordance with the Sub-Recipient's procurement policy as well as all federal and state laws and regulations. All procurement activities shall contain sufficient source documentation and be in accordance with all applicable regulations.

The Sub-Recipient shall be responsible for furnishing or contracting all labor, materials, equipment, tools, transportation and supervision and for performing all work per sealed engineering designs and construction plans presented to the Division by the Sub-Recipient and subsequently approved by the Division and FEMA.

The Sub-Recipient and contractor shall be responsible for maintaining a safe and secure worksite for the duration of the work. The contractor shall maintain all work staging areas in a neat and presentable condition.

The Sub-Recipient shall ensure that no contractors or subcontractors are debarred or suspended from participating in federally funded projects.

The selected contractor shall have a current and valid occupational license/business tax receipt issued for the type of services being performed.

The Sub-Recipient shall provide documentation demonstrating the results of the procurement process. This shall include a rationale for the method of procurement and selection of contract type, contractor selection and/or rejection and bid tabulation and listing, and the basis of contract price.

The Sub-Recipient shall provide an executed "Debarment, Suspension, Ineligibility, Voluntary Exclusion Form" for each contractor and/or subcontractor performing services under this agreement.

Executed contracts with contractors and/or subcontractors shall be provided to the Division by the Sub-Recipient.

The Sub-Recipient shall provide copies of professional licenses for contractors selected to perform services. The Sub-Recipient shall provide a copy of a current and valid occupational license or business tax receipt issued for the type of services to be performed by the selected contractor.

2) The Sub-Recipient shall monitor and manage the acquisition of property subjected to or in danger of repetitive damage. The project shall be implemented in accordance with the approved scope of work previously presented to the Division by the Sub-Recipient and subsequently approved by the Division and FEMA. The Sub-Recipient shall ensure that all applicable state, local and federal laws and regulations are followed and documented, as appropriate.

   The project consists of the general construction and furnishing of all materials, equipment, labor and fees to acquire and demolish property.

   The Sub-Recipient shall fully perform the approved project, as described in the submitted documents, in accordance with the approved scope of work, budget line item, allocation of funds and applicable terms and conditions indicated herein. The Sub-Recipient shall not deviate from the approved project terms and conditions.

   Construction activities shall be completed by a qualified and licensed Florida contractor. All construction activities shall be monitored by the professional of record. The Sub-Recipient shall complete the project in accordance with all required permits. All work shall be completed in accordance with applicable codes and standards.

   Upon completion of the work, the Sub-Recipient shall schedule and participate in a final inspection of the completed project by the local municipal or county official, or another approving official, as applicable. The official shall inspect and certify that all installation was in accordance with the manufacturer's specifications. Any deficiencies found during this final inspection shall be corrected by the Sub-Recipient prior to Sub-Recipient's submittal of the final inspection request to the Division.

   Upon completion of Task 2, the Sub-Recipient shall submit the following documents with sufficient supporting documentation and provide a summary of all contract scope of work and scope of work changes, if any. Additional documentation for closeout shall include:

   a) Local Building Official Inspection Report, Local Permits, Certificate of Completion, Lead-based paint report, and Final Approval, as applicable.

b) Letter from corresponding entities certifying the termination of any utilities. This may include but is not limited to decommissioning of septic systems and potable water wells.

c) Copy of Warranty Deeds.

d) Letter verifying if human remains or archaeological features or deposits were encountered during project activities and, if so, how they were handled.

e) Letter verifying if prehistoric or historic artifacts or any other physical remains that could be associated with Native American, early European, or American settlement were encountered during project activities and, if so, how they were handled.

f) Verification letter or documentation showing that all construction activities occurred within the existing footprint of the property and that there was no staging of equipment in the areas designated as a floodplain.

g) Letter verifying that construction activities, staging activities, and storage did not occur in or impact any adjacent wetlands.

h) Letter verifying that construction vehicles and equipment were stored onsite during the project or at existing access points within the Sub-Recipient's right-of-way.

i) A Notice of Demolition or Asbestos Renovation forms and confirmation that any asbestos containing materials were taken to an authorized landfill for such materials.

j) Letter verifying that the Sub-Recipient complied with all federal, state, and local abatement and disposal requirements if any asbestos containing materials, lead-based paint, or other hazardous materials were found during construction activities.

k) Copy of all coordination with the Florida Department of Environmental Protection (FDEP) Division of Air Resource Management or the local pollution control agency that occurred prior to any demolition or renovations of buildings containing asbestos or asbestos containing material.

l) Letter verifying if any potentially hazardous waste, universal waste, or hazardous materials were encountered during project activities, and if so, how they were handled, managed, and disposed of in accordance with the requirements of local, state, and federal regulations, to include the site of disposal.

m) Copies of all required hazardous waste permits required by local, state and/or federal agencies must be submitted if any hazardous materials were encountered.

n) Letter verifying all demolition debris was disposed of in a manner consistent with FDEP regulations, to include the disposal location.

o) Proof of compliance with Project Conditions and Requirements contained herein.

3) During the course of this agreement, the Sub-Recipient shall submit requests for reimbursement on a quarterly basis. Adequate and complete source documentation shall be submitted to support all costs (federal share and local share) related to the project. In some cases, all project activities may not be fully complete prior to requesting reimbursement of costs incurred in completion of this scope of work; however, a partial reimbursement may be requested.

The Sub-Recipient shall submit an Affidavit signed by the Sub-Recipient's project personnel with each reimbursement request attesting to the completion of the work, that disbursements or payments were made in accordance with all agreement and regulatory conditions, and that reimbursement is due and has not been previously requested.

The Sub-Recipient shall maintain accurate time records. The Sub-Recipient shall ensure invoices are accurate and any contracted services were rendered within the terms and timelines of this agreement. All supporting documentation shall agree with the requested billing period. All costs submitted for reimbursement shall contain adequate source documentation, which may include but

not be limited to cancelled checks, bank statements, Electronic Funds Transfer, paid bills and invoices, payrolls, time and attendance records, contract and subcontract award documents.

Construction Expense: The Sub-Recipient shall pre-audit bills, invoices, and/or charges submitted by the contractors and subcontractors and pay the contractors and subcontractors for approved bills, invoices, and/or charges. Sub-Recipient shall ensure that all contractor/subcontractor bills, invoices, and/or charges are legitimate and clearly identify the activities being performed and associated costs.

Sub-Recipient Management Costs (SRMC) expenditure must adhere to FEMA Policy #104-11-1 HMGP Management Costs (Interim) signed November 14, 2018. FEMA defines management costs as any: Indirect costs, Direct administrative costs, and other administrative expenses associated with a specific project. Administrative costs are expenses incurred by a Sub-Recipient in managing and administering the federal award to ensure that federal, state requirements are met including: solicitation, development, review, and processing of sub-applications; delivery of technical assistance; quarterly progress and fiscal reporting; project monitoring; technical monitoring; compliance activities associated with federal procurement requirements; documentation of quality of work verification for quarterly reports and closeout; payment of claims; closeout review and liquidation; and records retention.

Any activities that are directly related to a project are not eligible under management costs. For example, architectural, engineering, and design services are project costs and cannot be included under management costs. Similarly, construction management activities that manage, coordinate, and supervise the construction process from project scoping to project completion are project costs. These activities cannot be included under management costs.

Due to Strategic Funds Management (SFM), SRMC Interim Policy requires management costs to be obligated in increments sufficient to cover Sub-Recipient needs, for no more than one year, unless contractual agreements require additional funding. FEMA has established a threshold where annual increments shall be applied to larger awards allowing smaller awards to be fully obligated. Obligations shall be handled by the size of the total subaward.

The Sub-Recipient shall pre-audit all SRMC source documentation – personnel, fringe benefits, travel, equipment, supplies, contractual, and indirect costs. A brief narrative is required to identify what the funds shall be used for. Documentation shall be detailed and clearly describe each approved task performed, hours devoted to each task, and the hourly rate charged including enough information to calculate the hourly rates based on payroll records. Employee benefits and tasks shall be clearly shown on the Personnel Activity Form, and all Personnel or Contractual SRMC shall be invoiced separate from all other project costs.

Project Management Expenses (only applies to disasters prior to August 1, 2017, all others adhere to FEMA Policy #104-11-1 for SRMC): The Sub-Recipient shall pre-audit source documentation such as payroll records, project time sheets, attendance logs, etc. Documentation shall be detailed information describing tasks performed, hours devoted to each task, and the hourly rate charged for each hour including enough information to calculate the hourly rates based on payroll records. Employee benefits shall be clearly shown.

The Division shall review all submitted requests for reimbursement for basic accuracy of information. Further, the Division shall ensure that no unauthorized work was completed prior to the approved project start date by verifying vendor and contractor invoices. The Division shall verify that reported costs were incurred in the performance of eligible work, that the approved work was completed, and that the mitigation measures are in compliance with the approved scope of work prior to processing any requests for reimbursement.

Review and approval of any third-party in-kind services, if applicable, shall be conducted by the Division in coordination with the Sub-Recipient.

Quarterly reports shall be submitted by the Sub-Recipient and received by the Division at the times provided in this agreement prior to the processing of any reimbursement.

The Sub-Recipient shall submit to the Division requests for reimbursement of actual construction and managerial costs related to the project as identified in the project application, sealed engineering designs, and construction plans. The requests for reimbursement shall include (per property):

a) Contractor, subcontractor, and/or vendor invoices which clearly display dates of services performed, description of services performed, location of services performed, cost of services performed, name of service provider and any other pertinent information;

b) Proof of payment from the Sub-Recipient to the contractor, subcontractor, and/or vendor for invoiced services;

c) Clear identification of amount of costs being requested for reimbursement as well as costs being applied against the local match amount.

The Sub-Recipient's final request for reimbursement shall include the final construction project cost. Supporting documentation shall show that all contractors and subcontractors have been paid.

B) Deliverables:

Mitigation Activities consist of acquiring, demolishing, and removing debris from three (3) single-family residential structures located in Port Orange, Florida, to include the removal of the foundation, utilities, septic tank, and underground improvements.

Mitigation activities shall include the removal of all associated debris to clear the site and the land to be converted into open space and deed restricted as set forth in the FEMA program requirements concerning the acquisition of property for open space [44 CFR 206.434 (e)].

The project shall provide protection against a 100-year storm event. Activities shall be completed in strict compliance with Federal, State and Local applicable Rules and Regulations.

Provided the Sub-Recipient performs in accordance with the Scope of Work outlined in this Agreement, the Division shall reimburse the Sub-Recipient based on the percentage of overall project completion.

PROJECT CONDITIONS AND REQUIREMENTS:

C) Engineering:

1) The Sub-Recipient shall submit to the Division an official letter stating that the project is 100% complete and ready for the Division's Final Inspection of the project.

2) The Sub-Recipient shall provide a copy of the Notice of Commencement, and any local official Inspection Report and/or Final Approval, as applicable.

3) The Sub-Recipient should submit a copy of the Warranty Deed.

4) The Sub-Recipient shall provide a copy of any letters issued by the utility companies involved, confirming that all services have been terminated, as applicable.

D) Environmental:

1) Sub-Recipient shall follow all applicable state, local and federal laws, regulations and requirements, and obtain (before starting project work) and comply with all required permits and approvals. Failure to obtain all appropriate federal, state, and local environmental permits and clearances may jeopardize federal funding.

2) Any change, addition or supplement to the approved Scope of Work that alters the project (including other work not funded by FEMA, but done substantially at the same time), regardless of the budget implications, shall require re-submission to the Division and FEMA for National Environmental Policy Act (NEPA) and National Historic Preservation Act (NHPA) re-evaluation before starting project work.

3) If human remains or intact archaeological features or deposits (e.g., arrowheads, pottery, glass, metal, etc.) are uncovered, work in the vicinity of the discovery shall stop immediately and all reasonable measures to avoid or minimize harm to the finds shall be taken. The Sub-Recipient shall ensure that archaeological discoveries are secured in place, that access to the sensitive areas is restricted, and that all reasonable measures are taken to avoid further disturbance of the discoveries. The Sub-Recipient's contractor shall provide immediate notice of such discoveries to the Sub-Recipient. The Sub-Recipient shall notify the Florida Division of Historical Resources, the Division, and FEMA within 24 hours of the discovery. Work in the vicinity of the discovery may not resume until FEMA has completed consultation with SHPO, Tribes, and other consulting parties as necessary.

   In the event that unmarked human remains are encountered during permitted activities, all work shall stop immediately, and the proper authorities notified in accordance with ***Florida Statutes, Section 872.05***.

4) Construction vehicles and equipment used for this project shall be maintained in good working order to minimize pollutant emissions.

5) If prehistoric or historic artifacts, such as pottery or ceramics, projectile points, dugout canoes, metal implements, historic building materials, or any other physical remains that could be associated with Native American, early European, or American settlement are encountered at any time within the project site area, the permitted project shall cease all activities involving subsurface disturbance in the vicinity of the discovery. The Sub-Recipient shall contact the Florida Department of State, Division of Historical Resources, Compliance Review Section at (850)-245-6333. Project activities shall not resume without verbal and/or written authorization. In the event that unmarked human remains are encountered during permitted activities, all work shall stop immediately and the proper authorities notified in accordance with Section 872.05, Florida Statutes.

6) All construction activities must occur within the existing footprint of the property. There shall be no staging of equipment in the areas designated as a floodplain. Failure to comply with these conditions may jeopardize FEMA funding; verification of compliance shall be required at project closeout.

7) Construction activities, staging activities, and storage shall not be located in or impact any adjacent wetlands. Failure to comply with this condition may jeopardize FEMA funding; verification of compliance shall be required at project closeout.

8) Construction vehicles and equipment shall be stored onsite during the project or at existing access points within the Sub-Recipient's right-of-way.

9) The Sub-Recipient shall handle, manage, and dispose of potentially hazardous waste, universal waste, and hazardous materials in accordance with the requirements of local, state, and federal regulations. These materials may include, but are not limited to asbestos, lead-based paint, laboratory reagents, propane cylinders, paints and solvents, coolants containing chlorofluorocarbons (CFCs), used oil, polychlorinated biphenyls (PCBs), other petroleum products, used oil filters, fuel filters, cleaning chemicals, pesticides, batteries, and unlabeled tanks and containers. Equipment that may include these materials are ice machines, refrigerators, generators, computers, televisions, mercury switches, fluorescent lights, fluorescent light ballasts, sandblast units, paint sprayers, etc. Failure to comply with these conditions may jeopardize FEMA funding; verification of compliance shall be required at project closeout.

10) If any asbestos containing material, lead-based paint, or other hazardous materials are found during the implementation of the project, the Sub-Recipient must comply with all federal, state, and local abatement and disposal requirements. Coordination with the Florida Department of Environmental Protection (FDEP) Division of Air Resource Management or the local pollution control agency prior to any demolition or renovations of buildings that contain asbestos or asbestos containing material is required. Failure to comply with these conditions may jeopardize FEMA funding; verification of compliance shall be required at project closeout.

11) The Sub-Recipient shall ensure that all demolition debris is disposed of in a manner consistent with FDEP regulations. Failure to comply with these conditions may jeopardize FEMA funding; verification of compliance shall be required at project closeout.

E) Programmatic:

1) A change in the scope of work *must* be approved by the Division and FEMA in advance regardless of the impact to the budget.

2) The Sub-Recipient must notify the Division as soon as significant developments become known, such as delays or adverse conditions that might raise costs or delay completion, or favorable conditions allowing lower costs or earlier completion.

3) The Sub-Recipient must "obtain prior written approval for any budget revision which would result in a need for additional funds" [44 CFR 13(c)], from the Division and FEMA.

4) Any extension of the Period of Performance shall be submitted to FEMA 60 days prior to the expiration date. Therefore, any request for a Period of Performance Extension shall be in writing and submitted, along with substantiation of the new expiration date and a new schedule of work, to the Division a minimum of seventy (70) days prior to the expiration date, for Division processing to FEMA.

5) A copy of the executed subcontract agreement must be forwarded to the Division within 10 days of execution.

6) The Sub-Recipient must avoid duplication of benefits between the HMGP and any other form of assistance, as required by Section 312 of the Stafford Act, and further clarification in 44 CFR 206.191. The Sub-Recipient shall identify and ensure that any duplication of benefits is properly documented and accounted for in the final mitigation offer.

7) If the Sub-Recipient is not the current titleholder of the affected properties, the Sub-Recipient shall provide documentation confirming the property acquisition and easement rights were obtained voluntarily. If condemnation or eminent domain is used to obtain easement rights, FEMA shall not pay for any associated costs or payments to the property owner. Furthermore, FEMA shall not consider it an eligible contribution to the Non-Federal cost share requirement and shall not financially participate in that component of a project if land or easements are obtained involuntarily.

8) The Sub-Recipient shall ensure that all property acquisition activities are voluntary and conducted in compliance with 44 CFR Part 80. In addition, the Sub-Recipient shall ensure that fair procedures are in place to compensate property owners and tenants affected by this property acquisition. This includes but may not be limited to determination of property values, the amount of mitigation offers, and the review and resolution of mitigation offer disputes.

9) The Sub-Recipient shall ensure that a title search is conducted on the subject properties. All known encumbrances that are incompatible with open space use shall be revised or extinguished to ensure that each property use is consistent with the open space requirements in 44 CFR Part 80 and applicable guidance.

10) The Sub-Recipient shall obtain a title insurance policy reflecting that all incompatible easements or other encumbrances to the title have been extinguished to demonstrate clear title in conformance with 44 CFR Section 80.17 (b).

11) The Sub-Recipient shall remove incompatible facilities by demolition or by relocation outside the hazard area within 90 days of settlement of the property transaction, in conformance with 44 CFR Section 80.17 (d).

12) The Sub-Recipient shall comply with the Uniform Relocation Assistance Act and document compliance as appropriate, if applicable.

13) Recording of the deed and required deed restrictions shall take place in accordance with State law and within 14 days after the settlement and closing.

14) The Sub-Recipient shall record each property purchased on the applicable quarterly report, when the property was acquired; and shall be reported by the property Identification number (ID#) from the Project Overview section of this document, and the applicable address.

15) The Sub-Recipient shall provide the following documentation for each property:

    a) An executed **Declaration and Release** Form (FEMA Form FF-104-FY-21-128).

    b) An executed **Statement of Voluntary Participation for Acquisition of Property for Purpose of Open Space** Form (FEMA Form FF-104-FY-21-124).

    c) An executed copy of the Model Statement of Assurances for Property Acquisition Projects or an equivalent acceptable to the Division and FEMA.

    d) A recorded copy of the Property Deed conveying full property interest to City of Port Orange. This deed must include the necessary elements of **"FEMA Model of Deed Restriction"** language with all required deed restrictions.

    e) A National Flood Insurance Program (NFIP) Repetitive Loss Update Worksheet (FEMA AW-501) for any property that is identified in the FEMA Repetitive Loss Database.

    f) Project specific information relating to duplication of benefits, as applicable.

16) Documentation demonstrating the market value of each property (pre-event or current, as appropriate) and how the market value was determined.

17) Special Flood Hazard Area (SFHA): Any area having special flood, mudflow, or flood-related erosion hazards, and shown on a Flood Hazard Boundary Map or a FIRM as Zone of A, AO, A1–A30, AE, A99, AH, AR, AR/A, AR/AE, AR/AH, AR/AO, AR/A1–A30, V1–V30, VE, or V. Per the National Flood Insurance Program (NFIP) regulations, if your property is within the Special Flood Hazard Area, where the National Flood Insurance Program's (NFIP's) floodplain management regulations must be enforced and the area where the mandatory purchase of flood insurance applies and shall be provided for closeout.

18) All closeout documentation shall be delivered to the Division 30 days prior to the Period of Performance (POP) date.

19) Special Conditions required on implementation of project:

    a) **EO 11988 CONDITION:** All construction activities must occur within the existing footprint of the property. There shall be no staging of equipment in the areas designated as a floodplain. Failure to comply with these conditions may jeopardize FEMA funding; verification of compliance shall be required at project closeout. **Source of condition:** Executive Order 11988 - Floodplains **Monitoring Required: No**

    b) **EO 11990 CONDITION:** Construction activities, staging activities, and storage shall not be located in or impact any adjacent wetlands. Failure to comply with this condition may jeopardize FEMA funding; verification of compliance shall be required at project closeout. **Source of condition:** Executive Order 11990 - Wetlands **Monitoring Required: No**

    c) **NHPA CONDITION:** If human remains or intact archeological features or deposits (e.g., arrowheads, pottery, glass, metal, etc.) are uncovered, work in the vicinity of the discovery shall stop immediately and all reasonable measures to avoid or minimize harm to the finds shall be taken. The Sub-Recipient shall ensure that archeological discoveries are secured in place, that access to the sensitive area is restricted, and that all reasonable measures are taken to avoid further disturbance of the discoveries. The Sub-Recipient's contractor shall provide immediate notice of such discoveries to the Sub-Recipient. The Sub-Recipient shall contact the Florida Division of Historic Resources and FEMA within 24 hours of the discovery. Work in the vicinity

of the discovery may not resume until FEMA has completed consultation with SHPO, Tribes, and other consulting parties as necessary. In the event that unmarked human remains are encountered during permitted activities; all work shall stop immediately, and the proper authorities notified in accordance with Florida Statutes, Section 872.05. **Source of condition:** National Historic Preservation Act (NHPA) **Monitoring Required: No**

d) **NHPA CONDITION:** If prehistoric or historic artifacts, such as pottery or ceramics, projectile points, dugout canoes, metal implements, historic building materials, or any other physical remains that could be associated with Native American, early European, or American settlement are encountered at any time within the project site area, the permitted project shall cease all activities involving subsurface disturbance in the vicinity of the discovery. The Sub-Recipient shall contact the Florida Department of State, Division of Historical Resources, Compliance Review Section at (850)-245-6333. Project activities shall not resume without verbal and/or written authorization. In the event that unmarked human remains are encountered during permitted activities, all work shall stop immediately and the proper authorities notified in accordance with Section 872.05, Florida Statutes. **Source of condition:** National Historic Preservation Act (NHPA) **Monitoring Required: No**

e) **NHPA CONDITION:** Construction vehicles and equipment shall be stored onsite during the project or at existing access points within the Sub-Recipient's right-of-way. **Source of condition:** National Historic Preservation Act (NHPA) **Monitoring Required: No**

f) **RCRA CONDITION:** The Sub-Recipient shall handle, manage, and dispose of potentially hazardous waste, universal waste, and hazardous materials in accordance with the requirements of local, state, and federal regulations. These materials may include, but are not limited to asbestos, lead-based paint, laboratory reagents, propane cylinders, paints and solvents, coolants containing chlorofluorocarbons (CFCs), used oil, polychlorinated biphenyls (PCBs), other petroleum products, used oil filters, fuel filters, cleaning chemicals, pesticides, batteries, and unlabeled tanks and containers. Equipment that may include these materials are ice machines, refrigerators, generators, computers, televisions, mercury switches, fluorescent lights, fluorescent light ballasts, sandblast units, paint sprayers, etc. Failure to comply with these conditions may jeopardize FEMA funding; verification of compliance shall be required at project closeout. **Source of condition:** Resource Conservation and Recovery Act, aka Solid Waste Disposal Act (RCRA) **Monitoring Required: No**

g) **SHM&SW CONDITION:** If any asbestos containing material, lead-based paint, or other hazardous materials are found during implementation of the project, the Sub-Recipient must comply with all federal, state, local abatement and disposal requirements. Coordination with the FDEP Division of Air Resource Management or the local pollution control agency PRIOR to any demolition or renovations of buildings that contain asbestos or asbestos containing materials is required. Failure to comply with these conditions may jeopardize FEMA funding; verification of compliance shall be required at project closeout. **Source of condition:** State Hazardous Materials and Solid Waste Laws **Monitoring Required: No**

h) **SHM&SW CONDITION:** The Sub-Recipient shall ensure that all demolition debris is disposed of in a manner consistent with FDEP regulations. Failure to comply with these conditions may jeopardize FEMA funding; verification of compliance shall be required at project closeout. **Source of condition:** State Hazardous Materials and Solid Waste Laws **Monitoring Required: No**

20) Sub-Recipient Management Costs (SRMC), implemented under the Disaster Relief and Recovery Act of 2018 (DRRA), amended Section 324 of the Stafford Act, and the Hazard Mitigation Grant Program Management Costs (Interim) FEMA Policy 104-11-1, provides 100% federal funding under HMGP to Sub-Recipients to efficiently manage the grant and complete activities in a timely manner.

a) SRMC must conform to 2 CFR Part 200, Subpart E, applicable program regulations, and Hazard Mitigation Assistance (HMA) Guidance (2015), ensuring costs are reasonable, allowable, allocable and necessary to the overall project.

b) Funding is for approved indirect costs, direct administrative costs, and administrative expenses associated with this specific project and shall have adequate documentation.

c) SRMC cannot exceed 5% of the total project costs awarded.

d) SRMC is 100% federally funded and shall be reimbursed based on actual costs incurred for each individual Request for Reimbursement (RFR) submitted with the required documentation.

e) SRMC shall be reconciled against actual costs on a quarterly basis and annual basis.

f) If the Final Project Reconciliation results in a reduction of total project costs, any resulting SRMC overpayment shall be reimbursed back to the State for return to FEMA prior to FEMA Closeout.

This is FEMA project number **4734-002-R**. It is funded under HMGP, FEMA-4734-DR-FL and must adhere to all program guidelines established for the HMGP in accordance with the PAS Operational Agreement for Disaster 4734.

FEMA awarded this project on April 14, 2025; with a Pre-Award date of January 15, 2024; the Period of Performance for this project shall end on **April 30, 2029.**

F) FINANCIAL CONSEQUENCES:

If the Sub-Recipient fails to comply with any term of the award, the Division shall take one or more of the following actions, as appropriate in the circumstances:

1) Temporarily withhold cash payments pending correction of the deficiency by the Sub-Recipient;

2) Disallow all or part of the cost of the activity or action not in compliance;

3) Wholly or partly suspend or terminate the current award for the Sub-Recipient's program;

4) Withhold further awards for the program; or

5) Take other remedies that may be legally available.

SCHEDULE OF WORK

State Contracting:	3	Months
Construction Plan/Technical Specifications:	3	Months
Bidding / Local Procurement:	3	Months
Title Search, Deed Restriction/Recording:	3	Months
Asbestos Test, Abatement:	3	Months
Environmental, Permitting, Bidding:	6	Months
Demolition/Site Grading/Landscaping:	12	Months
Local Inspections Compliance:	6	Months
State Final Inspection / Compliance:	6	Months
Closeout Compliance:	3	Months
Total Period of Performance:	**48**	**Months**

BUDGET

Line Item Budget*

	Project Cost	Federal Cost	Non-Federal Cost
Materials:	$1,198,000.00	$898,500.00	$299,500.00
Labor:	$95,280.00	$71,460.00	$23,820.00
Fees:	$53,930.00	$40,447.50	$13,482.50
**Pre-Award:	$1,150.00	$862.50	$287.50
Initial Agreement Amount:	**$1,348,360.00**	**$1,011,270.00**	**$337,090.00**
***Contingency Funds:	$0.00	$0.00	$0.00
Project Total:	**$1,348,360.00**	**$1,011,270.00**	**$337,090.00**
****SRMC**			
SRMC:	$20,000.00	$20,000.00	
SRMC-Pre-Award:	$30,870.00	$30,870.00	
SRMC Total:	**$50,870.00**	**$50,870.00**	

**Any line item amount in this Budget may be increased or decreased 10% or less, with the Division's approval, without an amendment to this Agreement being required, so long as the overall amount of the funds obligated under this Agreement is not increased.*

***This project has a Pre-Award, approved by FEMA in the amount of $1,150.00 project costs with a start date of **January 15, 2024**.*

**** This project has an estimated $0.00 in contingency funds.** *Per FEMA Hazard Mitigation Assistance Guidance Part VI, D.3.4 – Contingency funds are not automatically available for use. Prior to their release, contingency funds must be re-budgeted to another direct cost category and identified. Post-award changes to the budget require prior written approval from the Division (FDEM). The written request should demonstrate what unforeseen condition related to the project arose that required the use of contingency funds.*

Project Management costs are included for this project in the amount of $0.00.

***** Sub-Recipient Management Costs (SRMC) are included for this project in the amount of $50,870.00 in Federal funding.** *Per the Hazard Mitigation Grant Program Interim FEMA Policy 104-11-1, SRMC provides HMGP funding to Sub-Recipients to efficiently manage the grant and complete activities in a timely manner. SRMC must conform to 2 CFR Part 200, Subpart E, ensuring costs are reasonable, allowable, allocable and necessary to the overall project.*

SRMC cannot exceed 5% of the approved total project costs awarded and shall be reimbursed at 5% for each Request for Reimbursement (RFR) submitted with the required documentation.

If the Final Project Reconciliation results in a reduction of total project costs, any resulting SRMC overpayment shall be reimbursed back to the State for return to FEMA prior to FEMA Closeout.

*This project has a **SRMC Pre-Award,** approved by FEMA in the amount of $30,870.00, with a start date of **April 2, 2024**.*

Funding Summary Totals

Federal Share:	$ 1,011,270.00	(75.00%)
Non-Federal Share:	$337,090.00	(25.00%)
Total Project Cost:	**$1,348,360.00**	**(100.00%)**
SRMC (100% Federal)	$50,870.00	

Attachment B

Program Statutes and Regulations

The parties to this Agreement and the Hazard Mitigation Grant Program (HMGP) are generally governed by the following statutes and regulations:

(1) The Robert T. Stafford Disaster Relief and Emergency Assistance Act;

(2) 44 C.F.R. 7, 9, 18, 25, and 206. Reference (Title 44, up to date as of August 18, 2023, and last amended January 9, 2023.), and any other applicable FEMA policy memoranda and guidance documents;

(3) State of Florida Administrative Plan for the Hazard Mitigation Grant Program;

(4) Hazard Mitigation Assistance Program and Policy Guide, 2023;

(5) All applicable laws and regulations delineated in Attachment C of this Agreement.

In addition to the above statutes and regulations, the Sub-recipient must comply with the following:

The Sub-recipient shall fully perform the approved hazard mitigation project, as described in the Application and Attachment A (Budget and Scope of Work) attached to this Agreement, in accordance with approved scope of work indicated therein, the estimate of costs indicated therein, the allocation of funds indicated therein, and the terms and conditions of this Agreement. The Sub-recipient shall not deviate from the approved project and the terms and conditions of this Agreement. The Sub-recipient shall comply with any and all applicable codes and standards in performing work funded under this Agreement, and shall provide any appropriate maintenance and security for the project.

Any development permit issued by, or development activity undertaken by, the Sub-recipient and any land use permitted by or engaged in by the Sub-recipient, shall be consistent with the local comprehensive plan and land development regulations prepared and adopted pursuant to chapter 163, Part II, Florida Statutes. Funds shall be expended for, and development activities and land uses authorized for, only those uses which are permitted under the comprehensive plan and land development regulations. The Sub-recipient shall be responsible for ensuring that any development permit issued and any development activity or land use undertaken is, where applicable, also authorized by the Water Management District, the Florida Department of Environmental Protection, the Florida Department of Health, the Florida Game and Fish Commission, and any Federal, State, or local environmental or land use permitting authority, where required. The Sub-recipient agrees that any repair or construction shall be in accordance with applicable standards of safety, decency, and sanitation, and in conformity with applicable codes, specifications and standards.

The Sub-recipient will provide and maintain competent and adequate engineering supervision at the construction site to ensure that the completed work conforms with the approved plans and specifications and will furnish progress reports and such other information to HMGP as may be required.

If the hazard mitigation project described in Attachment A includes an acquisition or relocation project, then the Sub-recipient shall ensure that, as a condition of funding under this Agreement, the owner of the affected real property shall record in the public records of the county where it is located the following covenants and restrictions, which shall run with and apply to any property acquired, accepted, or from which a structure will be removed pursuant to the project.

(1) The property will be dedicated and maintained in perpetuity for a use that is compatible with open space, recreational, or wetlands management practices;

(2) No new structure will be erected on property other than:
   a. a public facility that is open on all sides and functionally related to a designed open space;
   b. a restroom; or

(3) A structure that the Director of the Federal Emergency Management Agency approves in writing before the commencement of the construction of the structure;

(4) After the date of the acquisition or relocation no application for disaster assistance for any purpose will be made to any Federal entity and no disaster assistance will be provided for the property by any Federal source; and

(5) If any of these covenants and restrictions is violated by the owner or by some third party with the knowledge of the owner, fee simple title to the Property described herein shall be conveyed to the Board of Trustees of the Internal Improvement Trust Fund of the State of Florida without further notice to the owner, its successors and assigns, and the owner, its successors and assigns shall forfeit all right, title and interest in and to the property.

HMGP Contract Manager will evaluate requests for cost overruns and submit to the regional Director written determination of cost overrun eligibility. Cost overruns shall meet Federal regulations set forth in 44 C.F.R. §206.438(b).

The National Environmental Policy Act (NEPA) stipulates that additions or amendments to a HMGP Sub-Recipient Scope of Work (SOW) shall be reviewed by all State and Federal agencies participating in the NEPA process.

As a reminder, the Sub-recipient must obtain prior approval from the State, before implementing changes to the approved project Scope of Work (SOW). Per the Uniform Administrative Requirements for Grants and Cooperative Agreements to State and Local Governments:

(1) For Construction projects, the grantee must "obtain prior written approval for any budget revision which result in a need for additional funds" (2 C.F.R. § 200.308);

(2) A change in the Scope of Work must be approved by FEMA in advance regardless of the budget implications; and

(3) The Sub-recipient must notify the State as soon as significant developments become known, such as delays or adverse conditions that might raise costs or delay completion, or favorable conditions allowing lower cost or earlier completion. Any extensions of the period of performance must be submitted to FEMA ninety (90) calendar days prior to the project expiration date. Reference, HMA Program and Policy Guide, 2023, G.3. Award Extensions, paragraph 3.

The Sub-recipient assures that it will comply with the following statutes and regulations to the extent applicable:

(1) 53 Federal Register 8034
(2) Federal Acquisition Regulations 31.2
(3) Section 1352, Title 31, US Code
(4) Chapter 473, Florida Statutes
(5) Chapter 215, Florida Statutes
(6) Section 768.28, Florida Statutes
(7) Chapter 119, Florida Statutes

(8) Section 216.181(6), Florida Statutes
(9) Cash Management Improvement Act of 1990
(10) American with Disabilities Act
(11) Section 112.061, Florida Statutes
(12) Immigration and Nationality Act
(13) Section 286.011, Florida Statutes
(14) 2 C.F.R. Part 200 – Uniform Administrative Requirements, Cost Principles, and Audit Requirements for Federal Awards
(15) Uniform Relocation Assistance and Real Property Acquisitions Act of 1970
(16) Title I of the Omnibus Crime Control and Safe Streets Act of 1968
(17) Juvenile Justice and Delinquency Prevention Act, or the Victims of Crime Act
(18) Omnibus Crime Control and Safe Streets Act of 1968, as amended
(19) Victims of Crime Act (as appropriate)
(20) Section 504 of the Rehabilitation Act of 1973, as amended
(21) Subtitle A, Title II of the Americans with Disabilities Act (ADA) (1990)
(22) Department of Justice regulations on disability discrimination, 28 C.F.R., Part 35 and Part 39
(23) 42 U.S.C. 5154a

Attachment C

Statement of Assurances

To the extent the following provisions apply to this Agreement, the Sub-recipient certifies that:

(a) It possesses legal authority to enter into this Agreement and to carry out the proposed program;

(b) Its governing body has duly adopted or passed as an official act of resolution, motion or similar action authorizing the execution of the hazard mitigation agreement with the Division of Emergency Management (DEM), including all understandings and assurances contained in it, and directing and authorizing the Sub-recipient's chief administrative officer or designee to act in connection with the application and to provide such additional information as may be required;

(c) No member of or delegate to the Congress of the United States, and no Resident Commissioner, shall receive any share or part of this Agreement or any benefit. No member, officer, or employee of the Sub-recipient or its designees or agents, no member of the governing body of the locality in which this program is situated, and no other public official of the locality or localities who exercises any functions or responsibilities with respect to the program during his tenure or for one year after, shall have any interest, direct or indirect, in any contract or subcontract, or the proceeds, for work be performed in connection with the program assisted under this Agreement. The Sub-recipient shall incorporate, in all contracts or subcontracts a provision prohibiting any interest pursuant to the purpose stated above;

(d) All Sub-recipient contracts for which the State Legislature is in any part a funding source, shall contain language to provide for termination with reasonable costs to be paid by the Sub-recipient for eligible contract work completed prior to the date the notice of suspension of funding was received by the Sub-recipient. Any cost incurred after a notice of suspension or termination is received by the Sub-recipient may not be funded with funds provided under this Agreement unless previously approved in writing by the Division. All Sub-recipient contracts shall contain provisions for termination for cause or convenience and shall provide for the method of payment in such event;

(e) It will comply with:

(1) Contract Work Hours and Safety Standards Act of 1962, 40 U.S.C. 327 et seq., requiring that mechanics and laborers (including watchmen and guards) employed on federally assisted contracts be paid wages of not less than one and one-half times their basic wage rates for all hours worked in excess of forty hours in a work week; and

(2) Federal Fair Labor Standards Act, 29 U.S.C. Section 201 et seq., requiring that covered employees be paid at least minimum prescribed wage, and also that they be paid one and one-half times their basic wage rates for all hours worked in excess of the prescribed work-week.

(f) It will comply with

(1) Title VI of the Civil Rights Act of 1964 (P.L. 88-352), and the regulations issued pursuant thereto, which provides that no person in the United States shall on the grounds of race, color, or national origin, be excluded from participation in, be denied the benefits of, or be otherwise subjected to discrimination under any program or activity for which the Sub-recipient received Federal financial assistance and will immediately take any measures necessary to effectuate this assurance. If any real property or structure thereon is provided or improved with the aid of Federal financial assistance extended to the Sub-

recipient, this assurance shall obligate the Sub-recipient, or in the case of any transfer of such property, any transferee, for the period during which the real property or structure is used for a purpose for which the Federal financial assistance is extended, or for another purpose involving the provision of similar services or benefits;

(2) Any prohibition against discrimination on the basis of age under the Age Discrimination Act of 1975, as amended (42 U.S.C. 6101-6107) which prohibits discrimination on the basis of age or with respect to otherwise qualifies handicapped individuals as provided in Section 504 of the Rehabilitation Act of 1973;

(3) Executive Order 11246, as amended by Executive Orders 11375 and 12086, and the regulations issued pursuant thereto, which provide that no person shall be discriminated against on the basis of race, color, religion, sex or national origin in all phases of employment during the performance of federal or federally assisted construction contracts; affirmative action to insure fair treatment in employment, upgrading, demotion, or transfer; recruitment or recruitment advertising; layoff/termination, rates of pay or other forms of compensation; and election for training and apprenticeship;

(g) It will establish safeguards to prohibit employees from using positions for a purpose that is or gives the appearance of being motivated by a desire for private gain for themselves or others, particularly those with whom they have family, business, or other ties pursuant to section 112.313 and section 112.3135, Florida Statutes;

(h) It will comply with the Anti-Kickback Act of 1986, 41 U.S.C. Chapter 87 which outlaws and prescribes penalties for “kickbacks” of wages in federally financed or assisted construction activities;

(i) It will comply with the provisions of 5 U.S.C. 7323 (further known as the Hatch Act) which limits the political activities of employees;

(j) It will comply with the flood insurance purchase and other requirements of the Flood Disaster Protection Act of 1973, as amended, 42 U.S.C. 50, including requirements regarding the purchase of flood insurance in communities where such insurance is available as a condition for the receipt of any Federal financial assistance for construction or acquisition purposes for use in any area having special flood hazards. The phrase “Federal financial assistance” includes any form of loan, grant, guaranty, insurance payment, rebate, subsidy, disaster assistance loan or grant, or any other form of direct or indirect Federal assistance;

For sites located within Special Flood Hazard Areas (SFHA), the Sub-recipient must include a FEMA Model Acknowledgement of Conditions of Mitigation of Property in a Special Flood Hazard Area with FEMA Grant Funds executed by the title holder with the closeout request verifying that certain SFHA requirements were satisfied on each of the properties. The Model Acknowledgement can be found at www.fema.gov/governmenta/grant/sfha_conditions.shtm

(k) It will require every building or facility (other than a privately owned residential structure) designed, constructed, or altered with funds provided under this Agreement to comply with the “Uniform Federal Accessibility Standards,” (AS) which is Appendix A to 41 C.F.R. Section 101-19.6 for general type buildings and Appendix A to 24 C.F.R., Part 40 for residential structures. The Sub-recipient will be responsible for conducting inspections to ensure compliance with these specifications by the contractor;

(l) It will, in connection with its performance of environmental assessments under the National Environmental Policy Act of 1969, comply with Section 106 of the National Historic Preservation Act of 1966 (54 U.S.C.), Executive Order 11593, 36 C.F.R., Part 800, and the Preservation of Archaeological and Historical Data Act of 1966 (54 U.S.C. 3125) by:

(1) Consulting with the State Historic Preservation Office to identify properties listed in or eligible for inclusion in the National Register of Historic Places that are subject to adverse effects (see 36 C.F.R., Section 800.8) by the proposed activity; and

(2) Complying with all requirements established by the State to avoid or mitigate adverse effects upon such properties.

(3) Abiding by the terms and conditions of the **"Programmatic Agreement Among the Federal Emergency Management Agency, the Florida State Historic Preservation Office, the Florida Division of Emergency Management and the Advisory Council on Historic Preservation, (PA)"** which addresses roles and responsibilities of Federal and State entities in implementing Section 106 of the National Historic Preservation Act (NHPA), 54 U.S.C., and implementing regulations in 36 C.F.R., Part 800.

(4) When any of the Sub-recipient's projects funded under this Agreement may affect a historic property, as defined in 36 C.F.R., Part 800.16 (l)(1), the Federal Emergency Management Agency (FEMA) may require the Sub-recipient to review the eligible scope of work in consultation with the State Historic Preservation Office (SHPO) and suggest methods of repair or construction that will conform with the recommended approaches set out in the **Secretary of Interior's Standards for Rehabilitation and Guidelines for Rehabilitating Historic Buildings 1992 (Standards),** the **Secretary of the Interior's Guidelines for Archeological Documentation (Guidelines)** (48 Federal Register 44734-37), or any other applicable Secretary of Interior standards. If FEMA determines that the eligible scope of work will not conform with the **Standards**, the Sub-recipient agrees to participate in consultations to develop, and after execution by all parties, to abide by, a written agreement that establishes mitigation and recondition measures, including but not limited to, impacts to archeological sites, and the salvage, storage, and reuse of any significant architectural features that may otherwise be demolished.

(5) The Sub-recipient agrees to notify FEMA and the Division if any project funded under this Agreement will involve ground disturbing activities, including, but not limited to: subsurface disturbance; removal of trees; excavation of footings and foundations, and installation of utilities (such as water, sewer, storm drains, electrical, gas, leach lines and septic tanks) except where these activities are restricted solely to areas previously disturbed by the installation, replacement or maintenance of such utilities. FEMA will request the SHPO's opinion on the potential that archeological properties may be present and be affected by such activities. The SHPO will advise the Sub-recipient on any feasible steps to be accomplished to avoid any National Register eligible archeological property or will make recommendations for the development of a treatment plan for the recovery or archeological data from the property.

If the Sub-recipient is unable to avoid the archeological property, develop, in consultation with SHPO, a treatment plan consistent with the **Guidelines** and take into account the Advisory Council on Historic Preservation (Council) publication "Treatment of Archeological Properties". The Sub-recipient shall forward information regarding the treatment plan to FEMA, the SHPO and the Council for review. If the SHPO and the Council do not object within fifteen (15) calendar days of receipt of the treatment plan, FEMA may direct the Sub-recipient to implement the treatment plan. If either the Council or the SHPO object, Sub-recipient shall not proceed with the project until the objection is resolved.

(6) The Sub-recipient shall notify the Division and FEMA as soon as practicable: (a) of any changes in the approved scope of work for a National Register eligible or listed property; (b) of all changes to a project that may result in a supplemental DSR or modify a HMGP project for a National Register eligible or listed property; (c) if it appears that a project funded under this Agreement will affect a previously unidentified property that may be

eligible for inclusion in the National Register or affect a known historic property in an unanticipated manner. The Sub-recipient acknowledges that FEMA may require the Sub-recipient to stop construction in the vicinity of the discovery of a previously unidentified property that may eligible for inclusion in the National Register or upon learning that construction may affect a known historic property in an unanticipated manner. The Sub-recipient further acknowledges that FEMA may require the Sub-recipient to take all reasonable measures to avoid or minimize harm to such property until FEMA concludes consultation with the SHPO. The Sub-recipient also acknowledges that FEMA will require, and the Sub-recipient shall comply with, modifications to the project scope of work necessary to implement recommendations to address the project and the property.

(7) The Sub-recipient acknowledges that, unless FEMA specifically stipulates otherwise, it shall not receive funding for projects when, with intent to avoid the requirements of the PA or the NHPA, the Sub-recipient intentionally and significantly adversely affects a historic property, or having the legal power to prevent it, allowed such significant adverse effect to occur.

(m) It will comply with applicable provisions of the following laws and policies prohibiting discrimination:

(1) Title VI of the Civil Rights Act of 1964, as amended, which prohibits discrimination based on race, color, or national origin (including limited English proficiency).

(2) Section 504 of the Rehabilitation Act of 1973, as amended, which prohibits discrimination based on disability.

(3) Title IX of the Education Amendments Act of 1972, as amended, which prohibits discrimination based on sex in education programs or activities.

(4) Age Discrimination Act of 1975, which prohibits discrimination based on age.

(5) U.S. Department of Homeland Security regulation 6 C.F.R. Part 19, which prohibits discrimination based on religion in social service programs.

(n) It will comply with Title IX of the Education Amendments of 1972, as amended (20 U.S.C. 1681-1683 and 1685-1686) which prohibits discrimination on the basis of sex;

(o) It will comply with the Comprehensive Alcohol Abuse and Alcoholism Prevention, Treatment and Rehabilitation Act of 1970, (42 U.S.C. 4541-45-94) relating to nondiscrimination on the basis of alcohol abuse or alcoholism;

(p) It will comply with 523 and 527 of the Public Health Service Act of 1912 (42 U.S.C. 290 dd-3 and 290 ee-3), as amended, relating to confidentiality of alcohol and drug abuse patient records;

(q) It will comply with Lead-Based Paint Poison Prevention Act (42 U.S.C. 4821 et seq.) which prohibits the use of lead based paint in construction of rehabilitation or residential structures;

(r) It will comply with the Energy Policy and Conservation Act (P.L. 94-163; 42 U.S.C. 6201-6422), and the provisions of the State Energy Conservation Plan adopted pursuant thereto;

(s) It will comply with the Laboratory Animal Welfare Act of 1966, (7 U.S.C. 2131-2159), pertaining to the care, handling, and treatment of warm blooded animals held for research, teaching, or other activities supported by an award of assistance under this Agreement;

(t) It will comply with Title VIII of the Civil Rights Act of 1968, (42 U.S.C 2000c and 42 U.S.C. 3601-3619), as amended, relating to non-discrimination in the sale, rental, or financing of housing, and

Title VI of the Civil Rights Act of 1964 (P.L. 88-352), which prohibits discrimination on the basis of race, color or national origin;

(u) It will comply with the Clean Air Act of 1955, as amended, 42 U.S.C. 7401-7675;

(v) It will comply with the Clean Water Act of 1977, as amended, 33 U.S.C. 1251-1388

(w) It will comply with the endangered Species Act of 1973, 16 U.S.C. 1531-1544;

(x) It will comply with the Intergovernmental Personnel Act of 1970, 42 U.S.C. 4701-4772;

(y) It will assist the awarding agency in assuring compliance with the National Historic Preservation Act of 1966, as amended, 54 U.S.C.;

(z) It will comply with environmental standards which may be prescribed pursuant to the National Environmental Policy Act of 1969, 42 U.S.C. 4321-4347;

(aa) It will assist the awarding agency in assuring compliance with the Preservation of Archeological and Historical Preservation Act of 1966, 16 U.S.C. 54 U.S.C. 3125

(bb) It will comply with the Rehabilitation Act of 1973, Section 504, 29 U.S.C. 794, regarding non-discrimination;

(cc) It will comply with the environmental standards which may be prescribed pursuant to the Safe Drinking Water Act of 1974, 42 U.S.C. 300f-300j-27, regarding the protection of underground water sources;

(dd) It will comply with the requirements of Titles II and III of the Uniform Relocation Assistance and Property Acquisition Policies Act of 1970, 42 U.S.C. 4621-4638, which provide for fair and equitable treatment of persons displaced or whose property is acquired as a result of Federal or Federally assisted programs;

(ee) It will comply with the Wild and Scenic Rivers Act of 1968, 16 U.S.C. 1271-1287, related to protecting components or potential components of the national wild and scenic rivers system;

(ff) It will comply with the following Executive Orders: EO 11514 (NEPA); EO 11738 (violating facilities); EO 11988 (Floodplain Management); EO 11990 (Wetlands); and EO 12898 (Environmental Justice);

(gg) It will comply with the Coastal Barrier Resources Act of 1977, 16 U.S.C. 3501-3510;

(hh) It will assure project consistency with the approved State program developed under the Coastal Zone Management Act of 1972, 16 U.S.C. 1451-14674; and

(ii) It will comply with the Fish and Wildlife Coordination Act of 1958, 16 U.S.C. 661-668.

(jj) With respect to demolition activities, it will:

(1) Create and make available documentation sufficient to demonstrate that the Sub-recipient and its demolition contractor have sufficient manpower and equipment to comply with the obligations as outlined in this Agreement.

(2) Return the property to its natural state as though no improvements had ever been contained thereon.

(3) Furnish documentation of all qualified personnel, licenses and all equipment necessary to inspect buildings located in the Sub-recipient's jurisdiction to detect the presence of asbestos and lead in accordance with requirements of the U.S. Environmental Protection Agency, the Florida Department of Environmental Protection and the County Health Department.

(4) Provide documentation of the inspection results for each structure to indicate:
   a. Safety Hazard Present
   b. Health Hazards Present
   c. Hazardous Materials Present

(5) Provide supervision over contractors or employees employed by the Sub-recipient to remove asbestos and lead from demolished or otherwise applicable structures.

(6) Leave the demolished site clean, level and free of debris.

(7) Notify the Division promptly of any unusual existing condition which hampers the contractor's work.

(8) Obtain all required permits.

(9) Provide addresses and marked maps for each site where water wells and septic tanks are to be closed along with the number of wells and septic tanks located on each site. Provide documentation of closures.

(10) Comply with mandatory standards and policies relating to energy efficiency which are contained in the State Energy Conservation Plan issued in compliance with the Energy Policy and Conservation Act (Public Law 94-163).

(11) Comply with all applicable standards, orders, or requirements issued under Section 112 and 306 of the Clean Air Act (42 U.S.C. 1857), Section 508 of the Clean Water Act (33 U.S.C. 1251-1388), Executive Order 11738, and the U.S. Environmental Protection Agency regulations (40 C.F.R., Part 15 and 61). This clause shall be added to any subcontracts.

(12) Provide documentation of public notices for demolition activities.

Attachment D

REQUEST FOR ADVANCE OR REIMBURSEMENT
OF HAZARD MITIGATION ASSISTANCE PROGRAM FUNDS

SUB-RECIPIENT: City of Port Orange

REMIT ADDRESS: City of Port Orange Depository Account, Truist Bank, 3500 East Silver Springs Boulevard

CITY: Ocala STATE: Florida ZIP CODE: 34470-6404

PROJECT TYPE: Acquisition PROJECT #: 4734-002-R

PROGRAM: Hazard Mitigation Grant Program CONTRACT #: H1201

BUDGET: _____ FEDERAL SHARE: _____ LOCAL: _____

ADVANCED RECEIVED: _____ N/A _____ AMOUNT: _____ SETTLED? _____

Invoice Period: _____ through _____ Payment No: _____

Total of Previous Payments to Date: _____ (Federal)
Total of Previous SRMC to Date: (SRMC Federal)
Total Federal to Date: _____ (Total Federal Paid)

Eligible Amount 100% (Current Request)	Obligated Federal Amount 75%	Obligated Local Non-Federal 25%	**Division Use Only**	
			Approved	Comments

TOTAL CURRENT REQUEST: $ _____

By signing this report, I certify to the best of my knowledge and belief that the report is true, complete, and accurate, and the expenditures, disbursements and cash receipts are for the purposes and objectives set forth in the terms and conditions of the Federal award. I am aware that any false, fictitious, or fraudulent information, or the omission of any material fact, may subject me to criminal, civil or administrative penalties for fraud, false statements, false claims or otherwise. (U.S. Code Title 18, Section 1001 and Title 31, Sections 3729-3730 and 3801-3812.

SUB-RECIPIENT SIGNATURE: _____

NAME: _____ TITLE: _____ DATE: _____

TO BE COMPLETED BY THE DIVISION

APPROVED PROJECT TOTAL $ _____

APPROVED SRMC TOTAL: $ _____

APPROVED FOR PAYMENT $ _____

_____
DIVISION DIRECTOR

_____
DATE

Attachment D (cont.)
SUMMARY OF DOCUMENTATION IN SUPPORT OF AMOUNT CLAIMED FOR ELIGIBLE DISASTER WORK UNDER THE HAZARD MITIGATION ASSISTANCE PROGRAM

SUB-RECIPIENT: City of Port Orange PAYMENT #:

PROJECT TYPE: Acquisition PROJECT #: 4734-002-R

PROGRAM: Hazard Mitigation Grant Program CONTRACT #: H1201

	REF NO[2]	DATE[3]	DOCUMENTATION[4]	*(Check) AMOUNT*	ELIGIBLE COSTS (100%)
1					
2					
3					
4					
5					
6					
7					
8					
This payment represents		***%***	***completion of the project.***	***TOTAL***	

[2] *Recipient's internal reference number (e.g., Invoice, Receipt, Warrant, Voucher, Claim Check, or Schedule #)*
[3] *Date of delivery of articles, completion of work or performance services. (per document)*
[4] *List Documentation (Recipient's payroll, material out of recipient's stock, recipient owned equipment and name of vendor or contractor) by category (Materials, Labor, Fees) and line item in the approved project line item budget. Provide a brief description of the articles or services. List service dates per each invoice.*

Attachment E
JUSTIFICATION OF ADVANCE PAYMENT

SUB-RECIPIENT: CITY OF PORT ORANGE

If you are requesting an advance, indicate same by checking the box below.

[ ] **ADVANCE REQUESTED** Advance payment of $ _____ is requested. Balance of payments will be made on a reimbursement basis. These funds are needed to pay staff, award benefits to clients, duplicate forms and purchase start-up supplies and equipment. We would not be able to operate the program without this advance.

If you are requesting an advance, complete the following chart and line item justification below. PLEASE NOTE: Calculate your estimated expenses at 100% of your expected needs for ninety (90) days. Submit Attachment D with the cost share breakdown along with Attachment E and all supporting documentation.

ESTIMATED EXPENSES

BUDGET CATEGORY/LINE ITEMS (list applicable line items)	**20___-20___ Anticipated Expenditures for First Three Months of Contract**
For example **ADMINISTRATIVE COSTS** **(Include Secondary Administration.)**	
For example **PROGRAM EXPENSES**	
TOTAL EXPENSES	

LINE ITEM JUSTIFICATION **(For each line item, provide a detailed justification explaining the need for the cash advance. The justification must include supporting documentation that clearly shows the advance will be expended within the first ninety (90) days of the contract term. Support documentation should include quotes for purchases, delivery timelines, salary and expense projections, etc. to provide the Division reasonable and necessary support that the advance will be expended within the first ninety (90) days of the contract term. Any advance funds not expended within the first ninety (90) days of the contract term as evidenced by copies of invoices and cancelled checks as required by the Budget and Scope of work showing 100% of expenditures for the 90 day period shall be returned to the Division Cashier, 2555 Shumard Oak Boulevard, Tallahassee, Florida 32399, within thirty (30) days of receipt, along with any interest earned on the advance.**

Attachment F

QUARTERLY REPORT FORM

***Instructions**: Complete and submit this form to State Project Manager within15-days after each quarter:*

SUB-RECIPIENT: City of Port Orange **PROJECT #:** 4734-002-R

PROJECT TYPE: Acquisition **CONTRACT #:** H1201

PROGRAM: Hazard Mitigation Grant Program **QUARTER ENDING:** _____

Advance Payment Information:

Advance Received ☐ N/A ☐ Amount: $ _____ Advance Settled? Yes ☐ No ☐

Financial Amount to Date:

Sub-Recipient Total Project Expenditures to date (federal & local): $

Target Dates (State Agreement):

Contract Execution Date: _____ Contract Expiration Date: _____

Date Deliverables Submitted: _____ Closeout Requested Date: _____

Describe **Milestones** achieved during this quarter:

Project Proceeding on **Schedule**? ☐ Yes ☐ No (*If No, Describe under **Issues** below)*

Percentage of Milestones completed to Date: _____%

Describe Activities - Milestones completed this quarter only:

Schedule of the Milestones-Activities:

Milestone	**Dates** (estimated)
State Contracting	
Closeout Compliance	
Estimated Project Completion Date:	

Issues or circumstances affecting completion date, milestones, scope of work, and/or cost:

Cost Status: ☐ Cost Unchanged ☐ Under Budget ☐ Over Budget

Cost / Financial **Comments:**

NOTE: Events may occur between quarterly reports, which have significant impact upon your project(s), such as anticipated overruns, changes in scope of work, extensions. Contact the Division as soon as these conditions are known, otherwise you could be non-compliant with your sub-grant award.

Sub-Recipient Contract Representative (POC): _____

Signature: _____ Phone: _____

~ To be completed by Florida Division of Emergency Management Project Manager ~

Project Manager Statement: ☐ *No Action Required, OR*

☐ *Action Required:* _____

PM Percentage of Activates competed per PM Review QR Milestones Spreadsheet: ____%

Date Reviewed: _____ *Reviewer:* _____ *Project Manager*

Attachment G

Warranties and Representations

Financial Management

The Sub-Recipient's financial management system must comply with 2 C.F.R. §200.302.

Procurements

Any procurement undertaken with funds authorized by this Agreement must comply with the requirements of 2 C.F.R. §200, Part D—Post Federal Award Requirements—Procurement Standards (2 C.F.R. §§200.317 through 200.327).

Business Hours

The Sub-Recipient shall have its offices open for business, with the entrance door open to the public, and at least one employee on site, from: **8:00 AM - 5:00 PM, Monday Thru Friday, as applicable.**

Licensing and Permitting

All subcontractors or employees hired by the Sub-Recipient shall have all current licenses and permits required for all of the particular work for which they are hired by the Sub-Recipient.

Attachment H

Certification Regarding
Debarment, Suspension, Ineligibility
And Voluntary Exclusion

Subcontractor Covered Transactions

The prospective subcontractor, _____, of the Sub-Recipient certifies, by submission of this document, that neither it, its principals, nor affiliates are presently debarred, suspended, proposed for debarment, declared ineligible, voluntarily excluded, or disqualified from participation in this transaction by any Federal department or agency.

SUBCONTRACTOR

_____

By: _____
Signature

_____
Name and Title

_____
Street Address

_____
City, State, Zip

_____
Date

City of Port Orange
Sub-Recipient's Name

H1201
DEM Contract Number

4734-002-R
FEMA Project Number

Attachment I

Federal Funding Accountability and Transparency Act

Instructions and Worksheet

PURPOSE: The Federal Funding Accountability and Transparency Act (FFATA) was signed on September 26, 2006. The intent of this legislation is to empower every American with the ability to hold the government accountable for each spending decision. The FFATA legislation requires information on federal awards (federal assistance and expenditures) be made available to the public via a single, searchable website, which is http://www.usaspending.gov/.

The FFATA Sub-award Reporting System (FSRS) is the reporting tool the Florida Division of Emergency Management ("FDEM" or "Division") must use to capture and report sub-award and executive compensation data regarding first-tier sub-awards that obligate $25,000 or more in Federal funds (excluding Recovery funds as defined in section 1512(a)(2) of the American Recovery and Reinvestment Act of 2009, Pub. L. 111-5).

Note: This "Instructions and Worksheet" is meant to explain the requirements of the FFATA and give clarity to the FFATA Form distributed to sub-awardees for completion. All pertinent information below should be filled out, signed, and returned to the project manager.

ORGANIZATION AND PROJECT INFORMATION

The following information must be provided to the FDEM prior to the FDEM's issuance of a sub-award (Agreement) that obligates $25,000 or more in federal funds as described above. Please provide the following information and return the signed form to the Division as requested.

PROJECT #: 4734-002-R

FUNDING AGENCY: Federal Emergency Management Agency

AWARD AMOUNT: $ 1,062,140.00

OBLIGATION/ACTION DATE: January 15, 2024

SUBAWARD DATE (if applicable): _____

UEID/SAM#: LV8ZD1LYF3H4

*If your company or organization does not have a UEID/SAM number, you will need to obtain one from https://sam.gov/content/entity-registrationThe process to request a UEID/SAM number takes about ten minutes and is free of charge.

BUSINESS NAME: _____

DBA NAME (IF APPLICABLE): _____

PRINCIPAL PLACE OF BUSINESS ADDRESS: _____

ADDRESS LINE 1: _____

ADDRESS LINE 2: _____

ADDRESS LINE 3: _____

CITY _____ STATE _____ ZIP CODE+4** _____

PARENT COMPANY UEID/SAM# (if applicable): _____

CATALOG OF FEDERAL DOMESTIC ASSISTANCE (CFDA#): _____

DESCRIPTION OF PROJECT (Up to 4000 Characters)

As a Hazard Mitigation Grant Program project, the Sub-Recipient proposes to mitigate three (3) single-family residential structures located in Port Orange, Florida, 32127, 32129.

The scope of work proposes to acquire and demolish three (3) single-family residential structures built on a slab-on-grade foundation. Demolition activities include the removal of the foundation at least one foot below the finish grade, removal of utilities, septic tank, and underground improvements. All associated debris shall be removed to an approved landfill following demolition. These properties are prone to flooding from the Halifax River during hurricanes and have experienced frequent flooding. The proposed acquisition project intends to permanently eliminate the risk of future flood damage and protect the occupants from future flood loss.

Mitigation activities shall include the removal of all associated debris to clear the site and the land to be converted into open space and deed restricted as set forth in the FEMA program requirements concerning the acquisition of property for open space [44 CFR 206.434 (e)].

The project shall provide protection against a 100-year storm event. Activities shall be completed in strict compliance with Federal, State and Local applicable Rules and Regulations.

Project Locations:

ID#	Location	Coordinates
1.	5899 Trailwood Drive, Port Orange, Florida, 32127	(29.100922, -80.986862)
2.	798 Sugar House Drive, Port Orange, Florida, 32129	(29.145480, -81.010360)
3.	893 Sugar House Drive, Port Orange, Florida, 32129	(29.147720, -81.004780)

Verify the approved project description above, if there is any discrepancy, please contact the project manager.

PRINCIPAL PLACE OF PROJECT PERFORMANCE (IF DIFFERENT THAN PRINCIPAL PLACE OF BUSINESS):

ADDRESS LINE 1: _____

ADDRESS LINE 2: _____

ADDRESS LINE 3: _____

CITY _____ STATE _____ ZIP CODE+4** _____

CONGRESSIONAL DISTRICT FOR PRINCIPAL PLACE OF PROJECT PERFORMANCE:

**Providing the Zip+4 ensures that the correct Congressional District is reported.

EXECUTIVE COMPENSATION INFORMATION:

1. In your business or organization's previous fiscal year, did your business or organization (including parent organization, all branches, and all affiliates worldwide) receive (a) 80 percent or more of your annual gross revenues from Federal procurement contracts (and subcontracts) and Federal financial assistance (e.g. loans, grants, subgrants, and/or cooperative agreements, etc.) subject to the Transparency Act, as defined at 2 C.F.R. 170.320; , (b) $25,000,000 or more in annual gross revenues from U.S. Federal procurement contracts (and subcontracts) and Federal financial assistance (e.g. loans, grants, subgrants, and/or cooperative agreements, etc.) subject to the Transparency Act?

   Yes ☐ No ☐

If the answer to Question 1 is "Yes," continue to Question 2. If the answer to Question 1 is "No", move to the signature block below to complete the certification and submittal process.

2. Does the public have access to information about the compensation of the executives in your business or organization (including parent organization, all branches, and all affiliates worldwide) through periodic reports filed under section 13(a) or 15(d) of the Securities Exchange Act of 1934 (15 U.S.C. 78m(a), 78o(d)) Section 6104 of the Internal Revenue Code of 1986?

   Yes ☐ No ☐

If the answer to Question 2 is "Yes," move to the signature block below to complete the certification and submittal process. [Note: Securities Exchange Commission information should be accessible at http//www.sec.gov/answers/execomp.htm. Requests for Internal Revenue Service (IRS) information should be directed to the local IRS for further assistance.]

If the answer to Question 2 is "No" FFATA reporting is required. Provide the information required in the "TOTAL COMPENSATION CHART FOR MOST RECENTLY COMPLETED FISCAL YEAR" appearing below to report the "Total Compensation" for the five (5) most highly compensated "Executives", in rank order, in your organization. For purposes of this request, the following terms apply as defined in 2 C.F.R. Ch. 1 Part 170 Appendix A:

"Executive" is defined as "officers, managing partners, or other employees in management positions".

"Total Compensation" is defined as the cash and noncash dollar value earned by the executive during the most recently completed fiscal year and includes the following:

i. Salary and bonus.

ii. Awards of stock, stock options, and stock appreciation rights. Use the dollar amount recognized for financial statement reporting purposes with respect to the fiscal year in accordance with the Statement of Financial Accounting Standards No. 123 (Revised 2004) (FAS 123R), Shared Based Payments.

iii. Earnings for services under non-equity incentive plans. This does not include group life, health, hospitalization or medical reimbursement plans that do not discriminate in favor of executives, and are available generally to all salaried employees.

iv. Change in pension value. This is the change in present value of defined benefit and actuarial pension plans.

v. Above-market earnings on deferred compensation which is not tax-qualified.

vi. Other compensation, if the aggregate value of all such other compensation (e.g. severance, termination payments, value of life insurance paid on behalf of the employee, perquisites or property) for the executive exceeds $10,000.

TOTAL COMPENSATION CHART FOR MOST RECENTLY COMPLETED FISCAL YEAR

(Date of Fiscal Year Completion _____)

Rank (Highest to Lowest)	**Name (Last, First, MI)**	**Title**	**Total Compensation for Most Recently Completed Fiscal Year**
1			
2			
3			
4			
5			

THE UNDERSIGNED CERTIFIES THAT ON THE DATE WRITTEN BELOW, THE INFORMATION PROVIDED HEREIN IS ACCURATE.

SIGNATURE: _____

NAME AND TITLE: _____

DATE: _____

Attachment J

Mandatory Contract Provisions

Provisions:

Any contract or subcontract funded by this Agreement must contain the applicable provisions outlined in Appendix II to 2 C.F.R. Part 200. It is the responsibility of the sub-recipient to include the required provisions. The following is a list of sample provisions from Appendix II to 2 C.F.R. Part 200 that may be required:[1]

Appendix II to Part 200—Contract Provisions for Non-Federal Entity Contracts Under Federal Awards

In addition to other provisions required by the Federal agency or non-Federal entity, all contracts made by the non-Federal entity under the Federal award must contain provisions covering the following, as applicable.

(A) Contracts for more than the simplified acquisition threshold, which is the inflation adjusted amount determined by the Civilian Agency Acquisition Council and the Defense Acquisition Regulations Council (Councils) as authorized by 41 U.S.C. 1908, must address administrative, contractual, or legal remedies in instances where contractors violate or breach contract terms, and provide for such sanctions and penalties as appropriate.

(B) All contracts in excess of $10,000 must address termination for cause and for convenience by the non-Federal entity including the manner by which it will be affected and the basis for settlement.

(C) Equal Employment Opportunity. Except as otherwise provided under 41 C.F.R. Part 60, all contracts that meet the definition of "federally assisted construction contract" in 41 C.F.R. Part 60-1.3 must include the equal opportunity clause provided under 41 C.F.R. 60-1.4(b), in accordance with Executive Order 11246, "Equal Employment Opportunity" (30 FR 12319, 12935, 3 C.F.R. Part, 1964-1965 Comp., p. 339), as amended by Executive Order 11375, "Amending Executive Order 11246 Relating to Equal Employment Opportunity," and implementing regulations at 41 C.F.R. part 60, "Office of Federal Contract Compliance Programs, Equal Employment Opportunity, Department of Labor."

(D) Davis-Bacon Act, as amended (40 U.S.C. 3141-3148). When required by Federal program legislation, all prime construction contracts in excess of $2,000 awarded by non-Federal entities must include a provision for compliance with the Davis-Bacon Act (40 U.S.C. 3141-3144, and 3146-3148) as supplemented by Department of Labor regulations (29 C.F.R. Part 5, "Labor Standards Provisions Applicable to Contracts Covering Federally Financed and Assisted Construction"). In accordance with the statute, contractors must be required to pay wages to laborers and mechanics at a rate not less than the prevailing wages specified in a wage determination made by the Secretary of Labor. In addition, contractors must be required to pay wages not less than once a week. The non-Federal entity must place a copy of the current prevailing wage determination issued by the Department of Labor in each solicitation. The decision to award a contract or subcontract must be conditioned upon the acceptance of the wage determination. The non-Federal entity must report all suspected or reported violations to the Federal awarding agency. The contracts must also include a provision for compliance with the Copeland "Anti-Kickback" Act (40 U.S.C. 3145), as supplemented by Department of Labor regulations (29 C.F.R. Part 3, "Contractors and Subcontractors on Public Building or Public Work Financed in Whole or in Part by Loans or Grants from the United States"). The Act provides that each contractor or Sub-recipient must be prohibited from inducing, by any means, any person employed in the construction, completion, or

[1] For example, the Davis-Bacon Act is not applicable to other FEMA grant and cooperative agreement programs, including the Public Assistance Program or Hazard Mitigation Grant Program; however, sub-recipient may include the provision in its subcontracts.

repair of public work, to give up any part of the compensation to which he or she is otherwise entitled. The non-Federal entity must report all suspected or reported violations to the Federal awarding agency.

(E) Contract Work Hours and Safety Standards Act (40 U.S.C. 3701-3708). Where applicable, all contracts awarded by the non-Federal entity in excess of $100,000 that involve the employment of mechanics or laborers must include a provision for compliance with 40 U.S.C. 3702 and 3704, as supplemented by Department of Labor regulations (29 C.F.R. Part 5). Under 40 U.S.C. 3702 of the Act, each contractor must be required to compute the wages of every mechanic and laborer on the basis of a standard work week of 40 hours. Work in excess of the standard work week is permissible provided that the worker is compensated at a rate of not less than one and a half times the basic rate of pay for all hours worked in excess of 40 hours in the work week. The requirements of 40 U.S.C. 3704 are applicable to construction work and provide that no laborer or mechanic must be required to work in surroundings or under working conditions which are unsanitary, hazardous or dangerous. These requirements do not apply to the purchases of supplies or materials or articles ordinarily available on the open market, or contracts for transportation or transmission of intelligence.

(F) Rights to Inventions Made Under a Contract or Agreement. If the Federal award meets the definition of "funding agreement" under 37 C.F.R. § 401.2 (a) and the recipient or Sub-recipient wishes to enter into a contract with a small business firm or nonprofit organization regarding the substitution of parties, assignment or performance of experimental, developmental, or research work under that "funding agreement," the recipient or Sub-recipient must comply with the requirements of 37 C.F.R. Part 401, "Rights to Inventions Made by Nonprofit Organizations and Small Business Firms Under Government Grants, Contracts and Cooperative Agreements," and any implementing regulations issued by the awarding agency.

(G) Clean Air Act (42 U.S.C. 7401-7671q.) and the Federal Water Pollution Control Act (33 U.S.C. 1251-1387), as amended—Contracts and subgrants of amounts in excess of $150,000 must contain a provision that requires the non-Federal award to agree to comply with all applicable standards, orders or regulations issued pursuant to the Clean Air Act (42 U.S.C. 7401-7671q) and the Federal Water Pollution Control Act as amended (33 U.S.C. 1251-1387). Violations must be reported to the Federal awarding agency and the Regional Office of the Environmental Protection Agency (EPA).

(H) Debarment and Suspension (Executive Orders 12549 and 12689)—A contract award (see 2 C.F.R. 180.220) must not be made to parties listed on the governmentwide Excluded Parties List System in the System for Award Management (SAM), in accordance with the OMB guidelines at 2 C.F.R. 180 that implement Executive Orders 12549 (3 C.F.R. Part 1986 Comp., p. 189) and 12689 (3 C.F.R. Part 1989 Comp., p. 235), "Debarment and Suspension." The Excluded Parties List System in SAM contains the names of parties debarred, suspended, or otherwise excluded by agencies, as well as parties declared ineligible under statutory or regulatory authority other than Executive Order 12549.

(I) Byrd Anti-Lobbying Amendment (31 U.S.C. 1352)—Contractors that apply or bid for an award of $100,000 or more must file the required certification. Each tier certifies to the tier above that it will not and has not used Federal appropriated funds to pay any person or organization for influencing or attempting to influence an officer or employee of any agency, a member of Congress, officer or employee of Congress, or an employee of a member of Congress in connection with obtaining any Federal contract, grant or any other award covered by 31 U.S.C. 1352. Each tier must also disclose any lobbying with non-Federal funds that takes place in connection with obtaining any Federal award. Such disclosures are forwarded from tier to tier up to the non-Federal award.

(J) See 2 C.F.R, § 200.323 Procurement of recovered materials.

(K) See 2 C.F.R, §200.216 Prohibition on certain telecommunication and video surveillance services or equipment.

(L) See 2 C.F.R, §200.322 Domestic preferences for procurements

(Appendix II to Part 200, Revised Eff. 11/12/2020).

FEMA created the 2019 PDAT Contract Provisions Template to assist non-Federal entities. It is *available at* https://www.fema.gov/media-library-data/1569959119092-92358d63e00d17639d5db4de015184c9/PDAT_ContractProvisionsTemplate_9-30-19.pdf.

Please note that the sub-recipient alone is responsible for ensuring that all language included in its contracts meets the requirements of 2 C.F.R. § 200.327 and 2 C.F.R. Part 200, Appendix II.

Attachment K

Certification Regarding Lobbying

Check the appropriate box:

☐ This Certification Regarding Lobbying is required because the Contract, Grant, Loan, or Cooperative Agreement will exceed $100,000 pursuant to 2 C.F.R. Part 200, Appendix II(I); 31 U.S.C. § 1352; and 44 C.F.R. Part 18.

☐ This Certification is not required because the Contract, Grant, Loan, or Cooperative Agreement will be less than $100,000.

APPENDIX A, 44 C.F.R. PART 18 – CERTIFICATION REGARDING LOBBYING

Certification for Contracts, Grants, Loans, and Cooperative Agreements

The undersigned certifies, to the best of his or her knowledge and belief, that:

1. No Federal appropriated funds have been paid or will be paid, by or on behalf of the undersigned, to any person for influencing or attempting to influence an officer or employee of an agency, a Member of Congress, an officer or employee of Congress, or an employee of a Member of Congress in connection with the awarding of any Federal contract, the making of any Federal grant, the making of any Federal loan, the entering into of any cooperative agreement, and the extension, continuation, renewal, amendment, or modification of any Federal contract, grant, loan, or cooperative agreement.

2. If any funds other than Federal appropriated funds have been paid or will be paid to any person for influencing or attempting to influence an officer or employee of any agency, a Member of Congress, an officer or employee of Congress, or an employee of a Member of Congress in connection with this Federal contract, grant, loan, or cooperative agreement, the undersigned shall complete and submit Standard Form-LLL, "Disclosure Form to Report Lobbying," in accordance with its instructions.

3. The undersigned shall require that the language of this certification be included in the award documents for all subawards at all tiers (including subcontracts, subgrants, and contracts under grants, loans, and cooperative agreements) and that all subrecipients shall certify and disclose accordingly.

This certification is a material representation of fact upon which reliance was placed when this transaction was made or entered into. Submission of this certification is a prerequisite for making or entering into this transaction imposed by section 1352, title 31, U.S. Code. Any person who fails to file the required certification shall be subject to a civil penalty of not less than $10,000 and not more than $100,000 for each such failure.

The Sub-Recipient or subcontractor, _____, certifies or affirms the truthfulness and accuracy of each statement of its certification and disclosure, if any. In addition, the Contractor understands and agrees that the provisions of 31 U.S.C. Chap. 38, Administrative Remedies for False Claims and Statements, apply to this certification and disclosure, if any.

_____

Signature of Sub-Recipient/subcontractor's Authorized Official

_____

Name and Title of Sub-Recipient/subcontractor's Authorized Official

_____

Date

Attachment L

Florida Accountability Contract Tracking System (FACTS)
Requirements for Non-profit Organizations Under Section 216.1366, Florida Statutes
Instructions and Worksheet

CONTRACT DOCUMENTATION REQUIREMENTS

Section 216.1366, F.S., amended in 2023, establishes new documentation requirements for any contract for services executed, amended, or extended on or after July 1, 2023, with non-profit organizations as defined in s. 215.97 (2)(m). F.S. The contract must require the contractor to provide documentation that indicates the amount of state funds:

- Allocated to be used during the full term of the contract for remuneration to any member of the board of directors or an officer of the contractor.
- Allocated under each payment by the public agency to be used for remuneration of any member of the board of directors or an officer of the contractor. The documentation must indicate the amounts and recipients of the remuneration.

Such information must be included in the contract tracking system maintained pursuant to s. 215.985 F.S. and must be posted on the contractor's website if the contractor maintains a website.

- As used in this subsection, the term:

o "Officer" means a Chief Executive Officer (CEO), Chief Financial Officer (CFO), Chief Operating Officer (COO), or any other position performing an equivalent function.

o "Remuneration" means all compensation earned by or awarded to personnel, whether paid or accrued, regardless of contingency, including bonuses, accrued paid time off, severance payments, incentive payments, contributions to a retirement plan, or in-kind payments, reimbursements, or allowances for moving expenses, vehicles and other transportation, telephone services, medical services, housing, and meals.

o "State funds" means funds paid from the General Revenue Fund or any state trust fund, funds allocated by the Federal Government and distributed by the state, or funds appropriated by the state for distribution through any grant program. The term does not include funds used for the state Medicaid program.

Note: This "Instructions and Worksheet" is meant to explain the requirements of the Section 216.1366, F.S., amended in 2023, and give clarity to the attached form distributed to recipients and sub-recipients for completion. All pertinent information below should be filled out, signed, and returned to the project manager.

NON-PROFIT ORGANIZATION REMUNERATION INFORMATION

1. Is your business or organization a non-profit organization as defined in s. 215.97 (2)(m). F.S.?
Yes ☐ No ☐

If the answer to Question 1 is "Yes," continue to Question 2. If the answer to Question 1 is "No", move to the signature block below to complete the certification and submittal process.

2. Will state funds be used as remuneration to any member of the board of directors or an officer in your business or organization?
Yes ☐ No ☐

If the answer to Question 2 is "Yes," provide the information required in the "Total Compensation Paid to Non-Profit Personnel Using State Funds" form below. A separate form should be completed for each member of the board of directors or officer being compensated using state funds. If the answer to Question 2 is "No", move to the signature block below to complete the certification and submittal process.

Total Compensation Paid to Non-Profit Personnel Using State Funds

Name:		
Title:		
Agency Agreement/Contract #		
Total Contract Amount		
Contract Term:		
Line Item Budget Category	**Total Amount Paid**	**Amount Paid from State Funds**
Salaries		
Fringe Benefits		
Bonuses		
Accrued Paid Time Off		
Severance Payments		
Retirement Contributions		
In-Kind Payments		
Incentive Payments		
Reimbursements/Allowances		
Moving Expenses		
Transportation Costs		
Telephone Services		
Medical Services Costs		
Housing Costs		
Meals		

CERTIFICATION: I certify that the amounts listed above are true and accurate and in accordance with the approved budget.

Name:	
Signature:	
Title:	
Date:	

ATTACHMENT M

FOREIGN COUNTRY OF CONCERN AFFIDAVIT –
PERSONAL IDENTIFYING INFORMATION CONTRACT

Section 287.138, Florida Statutes, prohibits a Florida "Governmental entity"[2] from entering into or extending contracts with any other entity whereby such a contract, or extension thereof, could grant the other entity access to an individual's personal identifying information if that entity is associated with a "Foreign Country of Concern."[3] Specifically, section 287.138(2), Florida Statutes, prohibits such contracts with any entity that is owned by the government of a Foreign Country of Concern, any entity in which the government of a Foreign Country of Concern has a "controlling interest,"[4] and any entity organized under the laws of or which has its principal place of business in a Foreign Country of Concern.

As the person authorized to sign on behalf of Respondent, I hereby attest that the company identified above in the section entitled "Respondent Vendor Name" is not an entity owned by the government of a Foreign Country of Concern, no government of a Foreign Country of Concern has a controlling interest in the entity, and the entity has not been organized under the laws of or has its principal place of business in a Foreign Country of Concern.

I understand that pursuant to section 287.138, Florida Statutes, I am submitting this affidavit under penalty of perjury.

Respondent Vendor Name: _____

Vendor FEIN: _____

Vendor's Authorized Representative Name and Title: _____

Address: _____

City:_____State:_____Zip: _____

Phone Number: _____

Email Address:_____

Certified By: _____
AUTHORIZED SIGNATURE

Print Name and Title: _____

Date: _____

[2] As defined in Section 287.138 (1)(d), Florida Statutes.
[3] As defined in Section 287.138 (1)(c), Florida Statutes.
[4] As defined in Section 287.138 (1)(a), Florida Statutes.

SUB-RECIPIENT AGREEMENT CHECKLIST

DIVISION OF EMERGENCY MANAGEMENT
MITIGATION BUREAU
FISCAL OPERATIONS UNIT
HMGP

REQUEST FOR REVIEW AND APPROVAL	
SUB-RECIPIENT:	City of Port Orange
PROJECT #:	4734-002-R
PROJECT TITLE:	City of Port Orange, Flood-Prone Homes, Acquisition
CONTRACT #:	H1201
MODIFICATION #:	N/A

SUB-RECIPIENT REPRESENTATIVE (POINT OF CONTACT)	
	Valerie Duhl, P.E. Community Development Engineer 1000 City Center Circle Port Orange, Florida 32129

Enclosed is your copy of the proposed contract/modification between **City of Port Orange** and the Florida Division of Emergency Management (FDEM).

	COMPLETE
☐	This form is required to be included with all Reviews, Approvals, and Submittals
☐	Reviewed and Approved
☐	Signed & Dated Electronic Copy by Official Representative
☐	**Copy of the organization's resolution or charter** that specifically identifies the person or position that is authorized to sign, if not Chairman, Mayor, or Chief
☐	Attachment I - Federal Funding Accountability and Transparency Act (FFATA) - completed, signed, and dated ☐ N/A for Modifications or State Funded Agreements
☐	Attachment K – Certification Regarding Lobbying - completed, signed, and dated ☐ N/A for Modifications or State Funded Agreements
☐	Attachment L – FACTS - completed, signed, and dated ☐ N/A for Modifications or State Funded Agreements
☐	Attachment M – Foreign County of Concern Affivadit completed, signed, and dated ☐ N/A for Modifications or State Funded Agreements
☐	Electronic Submittal to the Grant Specialist

If you have any questions regarding this contract, or who is authorized to sign it, please contact your Project Manager at (618) 619-8015 or email me at Hannah.Abbott@em.myflorida.com.

Agreement Number: **H1201**

Project Number: **4734-002-R**

FEDERALLY-FUNDED SUBAWARD AND GRANT AGREEMENT

2 C.F.R. §200.1 states that a "subaward may be provided through any form of legal agreement, including an agreement that the pass-through entity considers a contract."

As defined by 2 C.F.R. §200.1, "pass-through entity" means "a non-Federal entity that provides a subaward to a subrecipient to carry out part of a Federal program."

As defined by 2 C.F.R. §200.1, "Sub-Recipient" means "an entity, usually but not limited to non-Federal entities that receives a subaward from a pass-through entity to carry out part of a Federal program."

As defined by 2 C.F.R. §200.1, "Federal award" means "Federal financial assistance that a non-Federal entity receives directly from a Federal awarding agency or indirectly from a pass-through entity."

As defined by 2 C.F.R. §200.1, "subaward" means "an award provided by a pass-through entity to a Sub-Recipient for the Sub-Recipient to carry out part of a Federal award received by the pass-through entity."

The following information is provided pursuant to 2 C.F.R. §200.332:

Sub-Recipient's name:	City of Port Orange
Sub-Recipient's unique entity identifier (UEI/FEIN):	LV8ZD1LYF3H4 / 59-6000412
Federal Award Identification Number (FAIN):	FEMA-DR-4734-FL
Federal Award Date:	April 14, 2025
Subaward Period of Performance Start and End Date:	January 15, 2024 – April 30, 2029
Amount of Federal Funds Obligated by this Agreement:	$1,062,140.00
Total Amount of Federal Funds Obligated to the Sub-Recipient by the pass-through entity to include this Agreement:	$1,062,140.00
Total Amount of the Federal Award committed to the Sub-Recipient by the pass-through entity	$1,062,140.00
Federal award project description (see FFATA):	Acquisition
Name of Federal awarding agency:	Federal Emergency Management Agency
Name of pass-through entity:	FL Division of Emergency Management
Contact information for the pass-through entity:	Hannah.Abbott@em.myflorida.com
Catalog of Federal Domestic Assistance (CFDA) Number and Name:	97.039 Hazard Mitigation Grant Program
Whether the award is R&D:	N/A
Indirect cost rate for the Federal award:	N/A

THIS AGREEMENT is entered into by the State of Florida, Division of Emergency Management, with headquarters in Tallahassee, Florida (hereinafter referred to as the "Division"), and the City of Port Orange, (hereinafter referred to as the "Sub-Recipient").

For the purposes of this Agreement, the Division serves as the pass-through entity for a Federal award, and the Sub-Recipient serves as the recipient of a subaward.

THIS AGREEMENT IS ENTERED INTO BASED ON THE FOLLOWING REPRESENTATIONS:

A. The Sub-Recipient represents that it is fully qualified and eligible to receive these grant funds to provide the services identified herein;

B. The State of Florida received these grant funds from the Federal government, and the Division has the authority to subgrant these funds to the Sub-Recipient upon the terms and conditions outlined below; and,

C. The Division has statutory authority to disburse the funds under this Agreement.

THEREFORE, the Division and the Sub-Recipient agree to the following:

(1) APPLICATION OF STATE LAW TO THIS AGREEMENT

2 C.F.R. §200.302(a) provides: “Each state must expend and account for the Federal award in accordance with state laws and procedures for expending and accounting for the state's own funds.” Therefore, section 215.971, Florida Statutes, entitled “Agreements funded with federal or state assistance”, applies to this Agreement.

(2) LAWS, RULES, REGULATIONS AND POLICIES

a. The Sub-Recipient's performance under this Agreement is subject to 2 C.F.R. Part 200, entitled “Uniform Administrative Requirements, Cost Principles, and Audit Requirements for Federal Awards.”

b. As required by section 215.971(1), Florida Statutes, this Agreement includes:

i. A provision specifying a scope of work that clearly establishes the tasks that the Sub-Recipient is required to perform.

ii. A provision dividing the agreement into quantifiable units of deliverables that must be received and accepted in writing by the Division before payment. Each deliverable must be directly related to the scope of work and specify the required minimum level of service to be performed and the criteria for evaluating the successful completion of each deliverable.

iii. A provision specifying the financial consequences that apply if the Sub-Recipient fails to perform the minimum level of service required by the agreement.

iv. A provision specifying that the Sub-Recipient may expend funds only for allowable costs resulting from obligations incurred during the specified agreement period.

v. A provision specifying that any balance of unobligated funds which has been advanced or paid must be refunded to the Division.

vi. A provision specifying that any funds paid in excess of the amount to which the Sub-Recipient is entitled under the terms and conditions of the agreement must be refunded to the Division.

c. In addition to the foregoing, the Sub-Recipient and the Division shall be governed by all applicable State and Federal laws, rules and regulations, including those identified in Attachment B. Any express reference in this Agreement to a particular statute, rule, or regulation in no way implies that no other statute, rule, or regulation applies.

(3) CONTACT

a. In accordance with section 215.971(2), Florida Statutes, the Division's Grant Manager shall be responsible for enforcing performance of this Agreement's terms and conditions and shall serve as the Division's liaison with the Sub-Recipient. As part of his/her duties, the Grant Manager for the Division shall:

i. Monitor and document Sub-Recipient performance; and,

ii. Review and document all deliverables for which the Sub-Recipient requests payment.

b. The Division's Grant Manager for this Agreement is:

Hannah Abbott
Project Manager
Bureau of Mitigation
Florida Division of Emergency Management
2555 Shumard Oak Blvd.
Tallahassee, FL 32399-2100
Telephone: 618-619-8015
Email: Hannah.Abbott@em.myflorida.com

The Division's Alternate Grant Manager for this Agreement is:

Kathleen Marshall
Community Program Manager
Bureau of Mitigation
Florida Division of Emergency Management
2555 Shumard Oak Boulevard
Tallahassee, FL 32399
Telephone: 850-815-4503
Email: Kathleen.Marshall@em.myflorida.com

1. The name and address of the Representative of the Sub-Recipient responsible for the administration of this Agreement is:

Valerie Duhl, P.E.
1000 City Center Circle
Port Orange, Florida 32129
Telephone: 386-506-5664
Email: vduhl@port-orange.org

2. In the event that different representatives or addresses are designated by either party after execution of this Agreement, notice of the name, title and address of the new representative will be provided to the other party.

(4) TERMS AND CONDITIONS

This Agreement contains all the terms and conditions agreed upon by the parties.

(5) EXECUTION

This Agreement may be executed in any number of counterparts, any one of which may be taken as an original.

(6) MODIFICATION

Either party may request modification of the provisions of this Agreement. Changes which are agreed upon shall be valid only when in writing, signed by each of the parties, and attached to the original of this Agreement.

(7) SCOPE OF WORK

The Sub-Recipient shall perform the work in accordance with the Budget and Scope of Work, Attachment A of this Agreement.

(8) PERIOD OF AGREEMENT

This Agreement shall begin on January 15, 2024, and shall end on April 30, 2029, unless terminated earlier in accordance with the provisions of Paragraph (17) of this Agreement. Consistent with the definition of "period of performance" contained in 2 C.F.R. §200.1, the term "period of agreement" refers to the time during which the Sub-Recipient "may incur new obligations to carry out the work authorized under" this Agreement. In accordance with section 215.971(1)(d), Florida Statutes, the Sub-Recipient may expend funds authorized by this Agreement "only for allowable costs resulting from obligations incurred during" the period of agreement.

The terms of this Agreement are intended to encompass the Pre-Award period. If applicable, the Pre-Award period and FEMA approved Pre-Award costs shall be outlined in Attachment A of this Agreement ("Budget and Scope of Work").

(9) FUNDING

a. This is a cost-reimbursement Agreement, subject to the availability of funds.

b. The State of Florida's performance and obligation to pay under this Agreement is contingent upon an annual appropriation by the Legislature, and subject to any modification in accordance with either chapter 216, Florida Statutes, or the Florida Constitution.

c. The Division will reimburse the Sub-Recipient only for allowable costs incurred by the Sub-Recipient in the successful completion of each deliverable. The maximum reimbursement amount for each deliverable is outlined in Attachment A of this Agreement ("Budget and Scope of Work"). The maximum reimbursement amount for the entirety of this Agreement is **$1,062,140.00**.

d. As required by 2 C.F.R. §200.415(a), any request for payment under this Agreement must include a certification, signed by an official who is authorized to legally bind the Sub-Recipient, which reads as follows: "By signing this report, I certify to the best of my knowledge and belief that the report is true, complete, and accurate, and the expenditures, disbursements and cash receipts are for the purposes and objectives set forth in the terms and conditions of the Federal award. I am aware that any false, fictitious, or fraudulent information, or the omission of any material fact, may subject me to criminal, civil or administrative penalties for fraud, false statements, false claims or otherwise. (U.S. Code Title 18, Section 1001 and Title 31, Sections 3729-3730 and 3801-3812)."

e. The Division will review any request for reimbursement by comparing the documentation provided by the Sub-Recipient against a performance measure, outlined in Attachment A, that clearly delineates:

i. The required minimum acceptable level of service to be performed; and,

ii. The criteria for evaluating the successful completion of each deliverable.

f. The performance measure required by section 215.971(1)(b), Florida Statutes, remains consistent with the requirement for a "performance goal", which is defined in 2 C.F.R. §200.1 as "a target level of performance expressed as a tangible, measurable objective, against which actual achievement can be compared." It also remains consistent with the requirement, contained in 2 C.F.R. §200.329, that the Division and the Sub-Recipient "relate financial data to performance goals and objectives of the Federal award."

g. If authorized by the Federal Awarding Agency, then the Division will reimburse the Sub-Recipient for overtime expenses in accordance with 2 C.F.R. §200.430 ("Compensation—personal services") and 2 C.F.R. §200.431 ("Compensation—fringe benefits"). If the Sub-Recipient seeks reimbursement for overtime expenses for periods when no work is performed due to vacation, holiday, illness, failure of the employer to provide sufficient work, or other similar cause (*See* 29 U.S.C. §207(e)(2)), then the Division will treat the expense as a fringe benefit. 2 C.F.R. §200.431(a) defines fringe benefits as "allowances and services provided by employers to their employees as compensation in addition to regular salaries and wages." Fringe benefits are allowable under this Agreement as long as

the benefits are reasonable and are required by law, Sub-Recipient-employee agreement, or an established policy of the Sub-Recipient. 2 C.F.R. §200.431(b) provides that the cost of fringe benefits in the form of regular compensation paid to employees during periods of authorized absences from the job, such as for annual leave, family-related leave, sick leave, holidays, court leave, military leave, administrative leave, and other similar benefits, are allowable if all of the following criteria are met:

i. They are provided under established written leave policies;

ii. The costs are equitably allocated to all related activities, including Federal awards; and,

iii. The accounting basis (cash or accrual) selected for costing each type of leave is consistently followed by the non-Federal entity or specified grouping of employees.

h. If authorized by the Federal Awarding Agency, then the Division will reimburse the Sub-Recipient for travel expenses in accordance with 2 C.F.R. §200.474. As required by the Reference Guide for State Expenditures, reimbursement for travel must be in accordance with section 112.061, Florida Statutes, which includes submission of the claim on the approved state travel voucher. If the Sub-Recipient seeks reimbursement for travel costs that exceed the amounts stated in section 112.061(6)(b), Florida Statutes ($6 for breakfast, $11 for lunch, and $19 for dinner), then the Sub-Recipient must provide documentation that:

i. The costs are reasonable and do not exceed charges normally allowed by the Sub-Recipient in its regular operations as a result of the Sub-Recipient's written travel policy; and,

ii. Participation of the individual in the travel is necessary to the Federal award.

i. The Division's grant manager, as required by section 215.971(2)(c), Florida Statutes, shall reconcile and verify all funds received against all funds expended during the grant agreement period and produce a final reconciliation report. The final report must identify any funds paid in excess of the expenditures incurred by the Sub-Recipient.

j. As defined by 2 C.F.R. §200.1, the term "improper payment" means or includes:

i. Any payment that should not have been made or that was made in an incorrect amount (including overpayments and underpayments) under statutory, contractual, administrative, or other legally applicable requirements; and,

ii. Any payment to an ineligible party, any payment for an ineligible good or service, any duplicate payment, any payment for a good or service not received (except for such payments where authorized by law), any payment that does not account for credit for applicable discounts, and any payment where insufficient or lack of documentation prevents a reviewer from discerning whether a payment was proper.

k. No reimbursements shall be made for costs outside the period of agreement, as defined in paragraph (8) of this Agreement.

(10) <u>RECORDS</u>

a. As required by 2 C.F.R. §200.336, the Federal awarding agency, Inspectors General, the Comptroller General of the United States, and the Division, or any of their authorized representatives, shall enjoy the right of access to any documents, papers, or other records of the Sub-Recipient which are pertinent to the Federal award, in order to make audits, examinations, excerpts, and transcripts. The right of access also includes timely and reasonable access to the Sub-Recipient's personnel for the purpose of interview and discussion related to such documents. Finally, the right of access is not limited to the required retention period but lasts as long as the records are retained.

b. As required by 2 C.F.R. §200.332(a)(5), the Division, the Chief Inspector General of the State of Florida, the Florida Auditor General, or any of their authorized representatives, shall enjoy the right of access to any documents, financial statements, papers, or other records of the Sub-Recipient which are pertinent to this Agreement, in order to make audits, examinations, excerpts, and transcripts. The right of access also includes timely and reasonable access to the Sub-Recipient's personnel for the purpose of interview and discussion related to such documents.

c. As required by Florida Department of State's record retention requirements (Chapter 119, Florida Statutes) and by 2 C.F.R. §200.334, the Sub-Recipient shall retain sufficient records to show its compliance with the terms of this Agreement, as well as the compliance of all subcontractors or consultants paid from funds under this Agreement, for a period of five (5) years from the date of submission of the final expenditure report. The following are the only exceptions to the five (5) year requirement:

i. If any litigation, claim, or audit is started before the expiration of the 5-year period, then the records must be retained until all litigation, claims, or audit findings involving the records have been resolved and final action taken.

ii. When the Division or the Sub-Recipient is notified in writing by the Federal awarding agency, cognizant agency for audit, oversight agency for audit, cognizant agency for indirect costs, or pass-through entity to extend the retention period.

iii. Records for real property and equipment acquired with Federal funds must be retained for 5 years after final disposition.

iv. When records are transferred to or maintained by the Federal awarding agency or pass-through entity, the 5-year retention requirement is not applicable to the Sub-Recipient.

v. Records for program income transactions after the period of performance. In some cases, recipients must report program income after the period of performance. Where there is such a requirement, the retention period for the records pertaining to the earning of the program income starts from the end of the non-Federal entity's fiscal year in which the program income is earned.

vi. Indirect cost rate proposals and cost allocations plans. This paragraph applies to the following types of documents and their supporting records: indirect cost rate computations or proposals, cost allocation plans, and any similar accounting computations of the rate at which a

particular group of costs is chargeable (such as computer usage chargeback rates or composite fringe benefit rates).

d. In accordance with 2 C.F.R. §200.335, the Federal awarding agency must request transfer of certain records to its custody from the Division or the Sub-Recipient when it determines that the records possess long-term retention value.

e. In accordance with 2 C.F.R. §200.336, the Division must always provide or accept paper versions of Agreement information to and from the Sub-Recipient upon request. If paper copies are submitted, then the Division must not require more than an original and two copies. When original records are electronic and cannot be altered, there is no need to create and retain paper copies. When original records are paper, electronic versions may be substituted through the use of duplication or other forms of electronic media provided that they are subject to periodic quality control reviews, provide reasonable safeguards against alteration, and remain readable.

f. As required by 2 C.F.R. §200.303, the Sub-Recipient shall take reasonable measures to safeguard protected personally identifiable information and other information the Federal awarding agency or the Division designates as sensitive or the Sub-Recipient considers sensitive consistent with applicable Federal, state, local, and tribal laws regarding privacy and obligations of confidentiality.

g. Florida's Government in the Sunshine Law (Section 286.011, Florida Statutes) provides the citizens of Florida with a right of access to governmental proceedings and mandates three, basic requirements: (1) meetings of public boards or commissions must be open to the public; (2) reasonable notice of such meetings must be given; and, (3) minutes of the meetings must be taken and promptly recorded. The mere receipt of public funds by a private entity, standing alone, is insufficient to bring that entity within the ambit of the open government requirements. However, the Government in the Sunshine Law applies to private entities that provide services to governmental agencies and that act on behalf of those agencies in the agencies' performance of their public duties. If a public agency delegates the performance of its public purpose to a private entity, then, to the extent that private entity is performing that public purpose, the Government in the Sunshine Law applies. For example, if a volunteer fire department provides firefighting services to a governmental entity and uses facilities and equipment purchased with public funds, then the Government in the Sunshine Law applies to board of directors for that volunteer fire department. Thus, to the extent that the Government in the Sunshine Law applies to the Sub-Recipient based upon the funds provided under this Agreement, the meetings of the Sub-Recipient's governing board or the meetings of any subcommittee making recommendations to the governing board may be subject to open government requirements. These meetings shall be publicly noticed, open to the public, and the minutes of all the meetings shall be public records, available to the public in accordance with chapter 119, Florida Statutes.

h. Florida's Public Records Law provides a right of access to the records of the state and local governments as well as to private entities acting on their behalf. Unless specifically exempted

from disclosure by the Legislature, all materials made or received by a governmental agency (or a private entity acting on behalf of such an agency) in conjunction with official business which are used to perpetuate, communicate, or formalize knowledge qualify as public records subject to public inspection. The mere receipt of public funds by a private entity, standing alone, is insufficient to bring that entity within the ambit of the public record requirements. However, when a public entity delegates a public function to a private entity, the records generated by the private entity's performance of that duty become public records. Thus, the nature and scope of the services provided by a private entity determine whether that entity is acting on behalf of a public agency and is therefore subject to the requirements of Florida's Public Records Law.

i. The Sub-Recipient shall maintain all records for the Sub-Recipient and for all subcontractors or consultants to be paid from funds provided under this Agreement, including documentation of all program costs, in a form sufficient to determine compliance with the requirements and objectives of the Budget and Scope of Work - Attachment A - and all other applicable laws and regulations.

IF THE CONTRACTOR HAS QUESTIONS REGARDING THE APPLICATION OF CHAPTER 119, FLORIDA STATUTES, TO THE CONTRACTOR'S DUTY TO PROVIDE PUBLIC RECORDS RELATING TO THIS CONTRACT, CONTACT THE CUSTODIAN OF PUBLIC RECORDS AT: (850) 815-7671 Records@em.myflorida.com, or 2555 Shumard Oak Boulevard, Tallahassee, FL 32399.

(11) AUDITS

a. The Sub-Recipient shall comply with the audit requirements contained in 2 C.F.R. Part 200, Subpart F.

b. In accounting for the receipt and expenditure of funds under this Agreement, the Sub-Recipient shall follow Generally Accepted Accounting Principles ("GAAP"). As defined by 2 C.F.R. §200.1, GAAP "has the meaning specified in accounting standards issued by the Government Accounting Standards Board (GASB) and the Financial Accounting Standards Board (FASB)."

c. When conducting an audit of the Sub-Recipient's performance under this Agreement, the Division shall use Generally Accepted Government Auditing Standards ("GAGAS"). As defined by 2 C.F.R. §200.1, GAGAS, "also known as the Yellow Book, means generally accepted government auditing standards issued by the Comptroller General of the United States, which are applicable to financial audits."

d. If an audit shows that all or any portion of the funds disbursed were not spent in accordance with the conditions of this Agreement, the Sub-Recipient shall be held liable for reimbursement to the Division of all funds not spent in accordance with these applicable regulations and

Agreement provisions within thirty (30) days after the Division has notified the Sub-Recipient of such non-compliance.

e. The Sub-Recipient shall have all audits completed by an independent auditor, which is defined in section 215.97(2)(i), Florida Statutes, as "an independent certified public accountant licensed under chapter 473." The independent auditor shall state that the audit complied with the applicable provisions noted above. The audit must be received by the Division no later than nine months from the end of the Sub-Recipient's fiscal year.

f. The Sub-Recipient shall send copies of reporting packages for audits conducted in accordance with 2 C.F.R. Part 200, by or on behalf of the Sub-Recipient, to the Division at the following address:

DEMSingle_Audit@em.myflorida.com

OR

Office of the Inspector General

2555 Shumard Oak Boulevard

Tallahassee, Florida 32399-2100

g. The Sub-Recipient shall send the Single Audit reporting package and Form SF-SAC to the Federal Audit Clearinghouse by submission online at:

http://harvester.census.gov/fac/collect/ddeindex.html

h. The Sub-Recipient shall send any management letter issued by the auditor to the Division at the following address:

DEMSingle_Audit@em.myflorida.com

OR

Office of the Inspector General

2555 Shumard Oak Boulevard

Tallahassee, Florida 32399-2100

(12) REPORTS

a. Consistent with 2 C.F.R. §200.328, the Sub-Recipient shall provide the Division with quarterly reports and a close-out report. These reports shall include the current status and progress by the Sub-Recipient and all subcontractors in completing the work described in the Scope of Work and the expenditure of funds under this Agreement, in addition to any other information requested by the Division.

b. Quarterly reports are due to the Division no later than fifteen (15) days after the end of each quarter of the program year and shall be sent each quarter until submission of the administrative close-out report. The ending dates for each quarter of the program year are March 31, June 30, September 30, and December 31.

c. The close-out report is due sixty (60) days after termination of this Agreement or sixty (60) days after completion of the activities contained in this Agreement, whichever first occurs.

d. If all required reports and copies are not sent to the Division or are not completed in a manner acceptable to the Division, then the Division may withhold further payments until they are completed or may take other action as stated in Paragraph (16) REMEDIES. "Acceptable to the Division" means that the work product was completed in accordance with the Budget and Scope of Work.

e. The Sub-Recipient shall provide additional program updates or information that may be required by the Division.

f. The Sub-Recipient shall provide additional reports and information identified in Attachment F.

(13) MONITORING

a. The Sub-Recipient shall monitor its performance under this Agreement, as well as that of its subcontractors and/or consultants who are paid from funds provided under this Agreement, to ensure that time schedules are being met, the Schedule of Deliverables and Scope of Work are being accomplished within the specified time periods, and other performance goals are being achieved. A review shall be done for each function or activity in Attachment A to this Agreement and reported in the quarterly report.

b. In addition to reviews of audits, monitoring procedures may include, but not be limited to, on-site visits by Division staff, limited scope audits, and/or other procedures. The Sub-Recipient agrees to comply and cooperate with any monitoring procedures/processes deemed appropriate by the Division. In the event that the Division determines that a limited scope audit of the Sub-Recipient is appropriate, the Sub-Recipient agrees to comply with any additional instructions provided by the Division to the Sub-Recipient regarding such audit. The Sub-Recipient further agrees to comply and cooperate with any inspections, reviews, investigations or audits deemed necessary by the Florida Chief Financial Officer or Auditor General. In addition, the Division will monitor the performance and financial management by the Sub-Recipient throughout the contract term to ensure timely completion of all tasks.

(14) LIABILITY

a. Unless Sub-Recipient is a State agency or subdivision, as defined in section 768.28(2), Florida Statutes, the Sub-Recipient is solely responsible to parties it deals with in carrying out the terms of this Agreement and, as authorized by section 768.28(19), Florida Statutes, Sub-Recipient shall hold the Division harmless against all claims of whatever nature by third parties arising from the work performance under this Agreement. For purposes of this Agreement, Sub-Recipient agrees that it is not an employee or agent of the Division, but is an independent contractor.

b. As required by section 768.28(19), Florida Statutes, any Sub-Recipient which is a state agency or subdivision, as defined in section 768.28(2), Florida Statutes, agrees to be fully responsible for its negligent or tortious acts or omissions which result in claims or suits against the

Division, and agrees to be liable for any damages proximately caused by the acts or omissions to the extent set forth in section 768.28, Florida Statutes. Nothing herein is intended to serve as a waiver of sovereign immunity by any Sub-Recipient to which sovereign immunity applies. Nothing herein shall be construed as consent by a state agency or subdivision of the State of Florida to be sued by third parties in any matter arising out of any contract.

(15) DEFAULT

If any of the following events occur ("Events of Default"), all obligations on the part of the Division to make further payment of funds shall terminate and the Division has the option to exercise any of its remedies set forth in Paragraph (16); however, the Division may make payments or partial payments after any Events of Default without waiving the right to exercise such remedies, and without becoming liable to make any further payment if:

a. Any warranty or representation made by the Sub-Recipient in this Agreement or any previous agreement with the Division is or becomes false or misleading in any respect, or if the Sub-Recipient fails to keep or perform any of the obligations, terms or covenants in this Agreement or any previous agreement with the Division and has not cured them in timely fashion, or is unable or unwilling to meet its obligations under this Agreement;

b. Material adverse changes occur in the financial condition of the Sub-Recipient at any time during the term of this Agreement, and the Sub-Recipient fails to cure this adverse change within thirty (30) days from the date written notice is sent by the Division;

c. Any reports required by this Agreement have not been submitted to the Division or have been submitted with incorrect, incomplete or insufficient information; or,

d. The Sub-Recipient has failed to perform and complete on time any of its obligations under this Agreement.

(16) REMEDIES

If an Event of Default occurs, then the Division shall, after thirty (30) calendar days written notice to the Sub-Recipient and upon the Sub-Recipient's failure to cure within those thirty (30) days, exercise any one or more of the following remedies, either concurrently or consecutively:

a. Terminate this Agreement, provided that the Sub-Recipient is given at least thirty (30) days prior written notice of the termination. The notice shall be effective when placed in the United States, first class mail, postage prepaid, by registered or certified mail-return receipt requested, to the address in paragraph (3) herein;

b. Begin an appropriate legal or equitable action to enforce performance of this Agreement;

c. Withhold or suspend payment of all or any part of a request for payment;

d. Require that the Sub-Recipient refund to the Division any monies used for ineligible purposes under the laws, rules and regulations governing the use of these funds.

e. Exercise any corrective or remedial actions, to include but not be limited to:

i. Request additional information from the Sub-Recipient to determine the reasons for or the extent of non-compliance or lack of performance,

ii. Issue a written warning to advise that more serious measures may be taken if the situation is not corrected,

iii. Advise the Sub-Recipient to suspend, discontinue or refrain from incurring costs for any activities in question or

iv. Require the Sub-Recipient to reimburse the Division for the amount of costs incurred for any items determined to be ineligible;

f. Exercise any other rights or remedies which may be available under law.

Pursuing any of the above remedies will not stop the Division from pursuing any other remedies in this Agreement or provided at law or in equity. If the Division waives any right or remedy in this Agreement or fails to insist on strict performance by the Sub-Recipient, it will not affect, extend or waive any other right or remedy of the Division, or affect the later exercise of the same right or remedy by the Division for any other default by the Sub-Recipient.

(17) TERMINATION

a. The Division may terminate this Agreement for cause after thirty (30) days written notice. Cause can include misuse of funds, fraud, lack of compliance with applicable rules, laws and regulations, failure to perform on time, and refusal by the Sub-Recipient to permit public access to any document, paper, letter, or other material subject to disclosure under chapter 119, Florida Statutes, as amended.

b. The Division may terminate this Agreement for convenience or when it determines, in its sole discretion that continuing the Agreement would not produce beneficial results in line with the further expenditure of funds, by providing the Sub-Recipient with thirty (30) calendar day's prior written notice.

c. The parties may agree to terminate this Agreement for their mutual convenience through a written amendment of this Agreement. The amendment will state the effective date of the termination and the procedures for proper closeout of the Agreement.

d. In the event that this Agreement is terminated, the Sub-Recipient will not incur new obligations for the terminated portion of the Agreement after the Sub-Recipient has received the notification of termination. The Sub-Recipient will cancel as many outstanding obligations as possible. Costs incurred after receipt of the termination notice will be disallowed. The Sub-Recipient shall not be relieved of liability to the Division because of any breach of Agreement by the Sub-Recipient. The

Division may, to the extent authorized by law, withhold payments to the Sub-Recipient for the purpose of set-off until the exact amount of damages due the Division from the Sub-Recipient is determined.

(18) PROCUREMENT

a. The Sub-Recipient shall ensure that any procurement involving funds authorized by the Agreement complies with all applicable federal and state laws and regulations, to include 2 C.F.R. §§200.318 through 200.327 as well as Appendix II to 2 C.F.R. Part 200 (entitled "Contract Provisions for Non-Federal Entity Contracts Under Federal Awards").

b. As required by 2 C.F.R. §200.318(i), the Sub-Recipient shall "maintain records sufficient to detail the history of procurement. These records will include, but are not necessarily limited to the following: rationale for the method of procurement, selection of contract type, contractor selection or rejection, and the basis for the contract price."

c. As required by 2 C.F.R. §200.318(b), the Sub-Recipient shall "maintain oversight to ensure that contractors perform in accordance with the terms, conditions, and specifications of their contracts or purchase orders." In order to demonstrate compliance with this requirement, the Sub-Recipient shall document, in its quarterly report to the Division, the progress of any and all subcontractors performing work under this Agreement.

d. The Sub-Recipient agrees to include in the subcontract that (i) the subcontractor is bound by the terms of this Agreement, (ii) the subcontractor is bound by all applicable state and federal laws and regulations, and (iii) the subcontractor shall hold the Division and Sub-Recipient harmless against all claims of whatever nature arising out of the subcontractor's performance of work under this Agreement, to the extent allowed and required by law.

e. As required by 2 C.F.R. §200.318(c)(1), the Sub-Recipient shall "maintain written standards of conduct covering conflicts of interest and governing the actions of its employees engaged in the selection, award and administration of contracts."

f. As required by 2 C.F.R. §200.319(a), the Sub-Recipient shall conduct any procurement under this agreement "in a manner providing full and open competition." Accordingly, the Sub-Recipient shall not:

i. Place unreasonable requirements on firms in order for them to qualify to do business;

ii. Require unnecessary experience or excessive bonding;

iii. Use noncompetitive pricing practices between firms or between affiliated companies;

iv. Execute noncompetitive contracts to consultants that are on retainer contracts;

v. Authorize, condone, or ignore organizational conflicts of interest;

vi. Specify only a brand name product without allowing vendors to offer an equivalent;

vii. Specify a brand name product instead of describing the performance, specifications, or other relevant requirements that pertain to the commodity or service solicited by the procurement;

viii. Engage in any arbitrary action during the procurement process; or,

ix. Allow a vendor to bid on a contract if that bidder was involved with developing or drafting the specifications, requirements, statement of work, invitation to bid, or request for proposals.

g. "Except in those cases where applicable Federal statutes expressly mandate or encourage" otherwise, the Sub-Recipient, as required by 2 C.F.R. §200.319(c), shall not use a geographic preference when procuring commodities or services under this Agreement.

h. The Sub-Recipient shall conduct any procurement involving invitations to bid (i.e. sealed bids) in accordance with 2 C.F.R. §200.320(d) as well as section 287.057(1)(a), Florida Statutes.

i. The Sub-Recipient shall conduct any procurement involving requests for proposals (i.e. competitive proposals) in accordance with 2 C.F.R. §200.320(2) as well as section 287.057(1)(b), Florida Statutes.

j. For each subcontract, the Sub-Recipient shall provide a written statement to the Division as to whether that subcontractor is a minority business enterprise, as defined in section 288.703, Florida Statutes. Additionally, the Sub-Recipient shall comply with the requirements of 2 C.F.R. §200.321 ("Contracting with small and minority businesses, women's business enterprises, and labor surplus area firms").

k. If the Sub-Recipient chooses to subcontract any of the work required under this Agreement, then the Sub-Recipient shall review its competitive solicitation and subsequent contract to be awarded for compliance with the procurement standards in 2 C.F.R. §§200.318 through 200.327 and required contract provisions in Appendix II to 2 C.F.R. Part 200. If the Sub-Recipient publishes a competitive solicitation or executes a contract that is not in compliance with the Federal procurement standards in 2 C.F.R. §§200.318 through 200.327 or the requirements of Appendix II to 2 C.F.R. Part 200, then the Sub-Recipient is on notice that the Division may:

i. Terminate this Agreement in accordance with the provisions outlined in paragraph (17) above; or,

ii. Refuse to reimburse the Sub-Recipient for any costs associated with that solicitation.

l. FEMA has developed helpful resources for subgrant recipients related to compliance with the Federal procurement standards in 2 C.F.R. §§200.318 through 200.327 and required contract

provisions in Appendix II to 2 C.F.R. Part 200. These resources are generally available at https://www.fema.gov/procurement-disaster-assistance-team.

(19) ATTACHMENTS

a. All attachments to this Agreement are incorporated as if set out fully.

b. In the event of any inconsistencies or conflict between the language of this Agreement and the attachments, the language of the attachments shall control, but only to the extent of the conflict or inconsistency.

c. This Agreement has the following attachments:

i. Exhibit 1 - Funding Sources
ii. Attachment A – Budget and Scope of Work
iii. Attachment B – Program Statutes and Regulations
iv. Attachment C – Statement of Assurances
v. Attachment D – Request for Advance or Reimbursement
vi. Attachment E – Justification of Advance Payment
vii. Attachment F – Quarterly Report Form
viii. Attachment G – Warranties and Representations
ix. Attachment H – Certification Regarding Debarment
x. Attachment I – Federal Funding Accountability and Transparency Act
xi. Attachment J – Mandatory Contract Provisions
xii. Attachment K – Certification Regarding Lobbying
xiii. Attachment L – Florida Accountability Contract Tracking System
xiv. Attachment M – Foreign Country of Concern Affidavit

(20) PAYMENTS

a. Any advance payment under this Agreement is subject to 2 C.F.R. §200.305 and, as applicable, section 216.181(16), Florida Statutes. All advances are required to be held in an interest-bearing account. If an advance payment is requested, the budget data on which the request is based and a justification statement shall be included in this Agreement as Attachment E. Attachment E will specify the amount of advance payment needed and provide an explanation of the necessity for and proposed use of these funds. No advance shall be accepted for processing if a reimbursement has been paid prior to the submittal of a request for advanced payment. After the initial advance, if any, payment shall be made on a reimbursement basis as needed.

b. Invoices shall be submitted at least quarterly and shall include the supporting documentation for all costs of the project or services. The final invoice shall be submitted within sixty (60) days after the expiration date of the agreement. An explanation of any circumstances prohibiting the submittal of quarterly invoices shall be submitted to the Division grant manager as part of the Sub-Recipient's quarterly reporting as referenced in Paragraph (12) of this Agreement.

c. If the necessary funds are not available to fund this Agreement as a result of action by the United States Congress, the federal Office of Management and Budgeting, the State Chief Financial Officer or under subparagraph (9)b. of this Agreement, all obligations on the part of the Division to make any further payment of funds shall terminate, and the Sub-Recipient shall submit its closeout report within thirty (30) days of receiving notice from the Division.

(21) REPAYMENTS

a. All refunds or repayments due to the Division under this Agreement are to be made payable to the order of "Division of Emergency Management", and mailed directly to the following address:

Division of Emergency Management
Cashier
2555 Shumard Oak Boulevard
Tallahassee FL 32399-2100

b. In accordance with section 215.34(2), Florida Statutes, if a check or other draft is returned to the Division for collection, Sub-Recipient shall pay the Division a service fee of $15.00 or 5% of the face amount of the returned check or draft, whichever is greater.

(22) MANDATED CONDITIONS

a. The validity of this Agreement is subject to the truth and accuracy of all the information, representations, and materials submitted or provided by the Sub-Recipient in this Agreement, in any later submission or response to a Division request, or in any submission or response to fulfill the requirements of this Agreement. All of said information, representations, and materials are incorporated by reference. The inaccuracy of the submissions or any material changes shall, at the option of the Division and with thirty (30) days written notice to the Sub-Recipient, cause the termination of this Agreement and the release of the Division from all its obligations to the Sub-Recipient.

b. This Agreement shall be construed under the laws of the State of Florida, and venue for any actions arising out of this Agreement shall be in the Circuit Court of Leon County. If any provision of this Agreement is in conflict with any applicable statute or rule, or is unenforceable, then the provision shall be null and void to the extent of the conflict, and shall be severable, but shall not invalidate any other provision of this Agreement.

c. Any power of approval or disapproval granted to the Division under the terms of this Agreement shall survive the term of this Agreement.

d. The Sub-Recipient agrees to comply with the Americans With Disabilities Act (Public Law 101-336, 42 U.S.C. Section 12101 et seq.), which prohibits discrimination by public and private entities on the basis of disability in employment, public accommodations, transportation, State and local government services, and telecommunications.

e. Those who have been placed on the convicted vendor list following a conviction for a public entity crime or on the discriminatory vendor list may not submit a bid on a contract to provide any goods or services to a public entity, may not submit a bid on a contract with a public entity for the construction or repair of a public building or public work, may not submit bids on leases of real property to a public entity, may not be awarded or perform work as a contractor, supplier, subcontractor, or consultant under a contract with a public entity, and may not transact business with any public entity in excess of $25,000.00 for a period of 36 months from the date of being placed on the convicted vendor list or on the discriminatory vendor list.

f. Any Sub-Recipient which is not a local government or state agency, and which receives funds under this Agreement from the federal government, certifies, to the best of its knowledge and belief, that it and its principals or affiliates:

i. Are not presently debarred, suspended, proposed for debarment, declared ineligible, voluntarily excluded or disqualified from covered transactions by a federal department or agency;

ii. Have not, within a five-year period preceding this proposal been convicted of or had a civil judgment rendered against them for fraud or a criminal offense in connection with obtaining, attempting to obtain, or performing a public (federal, state or local) transaction or contract under public transaction; violation of federal or state antitrust statutes or commission of embezzlement, theft, forgery, bribery, falsification or destruction of records, making false statements, or receiving stolen property;

iii. Are not presently indicted or otherwise criminally or civilly charged by a governmental entity (federal, state or local) with commission of any offenses enumerated in paragraph (22) f. ii. of this certification; and,

iv. Have not within a five-year period preceding this Agreement had one or more public transactions (federal, state or local) terminated for cause or default.

g. **In addition, the Sub-Recipient shall send to the Division (by email or by facsimile transmission) the completed "Certification Regarding Debarment, Suspension, Ineligibility And Voluntary Exclusion" (Attachment H) for each intended subcontractor which Sub-Recipient plans to fund under this Agreement. The form must be received by the Division before the Sub-Recipient enters into a contract with any subcontractor.**

h. The Division reserves the right to unilaterally cancel this Agreement if the Sub-Recipient refuses to allow public access to all documents, papers, letters or other material subject to the provisions of chapter 119, Florida Statutes, which the Sub-Recipient created or received under this Agreement.

i. If the Sub-Recipient is allowed to temporarily invest any advances of funds under this Agreement, any interest income shall either be returned to the Division or be applied against the Division's obligation to pay the contract amount.

j. The State of Florida will not intentionally award publicly-funded contracts to any contractor who knowingly employs unauthorized alien workers, constituting a violation of the employment provisions contained in 8 U.S.C. Section 1324a(e) [Section 274A(e) of the Immigration and Nationality Act ("INA")]. The Division shall consider the employment by any contractor of unauthorized aliens a violation of Section 274A(e) of the INA. Such violation by the Sub-Recipient of the employment provisions contained in Section 274A(e) of the INA shall be grounds for unilateral cancellation of this Agreement by the Division.

k. Section 287.05805, Florida Statutes, requires that any state funds provided for the purchase of or improvements to real property are contingent upon the contractor or political subdivision granting to the state a security interest in the property at least to the amount of state funds provided for at least 5 years from the date of purchase or the completion of the improvements or as further required by law.

l. The Division may, at its option, terminate the Contract if the Contractor is found to have submitted a false certification as provided under section 287.135(5), Florida Statutes, or been placed on the Scrutinized Companies with Activities in Sudan List or the Scrutinized Companies with Activities in the Iran Petroleum Energy Sector List, or been engaged in business operations in Cuba or Syria, or to have been placed on the Scrutinized Companies that Boycott Israel List or is engaged in a boycott of Israel.

m. If applicable, pursuant to Section 255.0993, Florida Statutes, the Sub-Recipient shall ensure that any iron or steel product, as defined in Section 255.0993(1)(b), Florida Statutes, that is permanently incorporated in the deliverable(s) resulting from this project, must be produced in the United States.

(23) LOBBYING PROHIBITION

a. 2 C.F.R. §200.450 prohibits reimbursement for costs associated with certain lobbying activities.

b. Section 216.347, Florida Statutes, prohibits "any disbursement of grants and aids appropriations pursuant to a contract or grant to any person or organization unless the terms of the grant or contract prohibit the expenditure of funds for the purpose of lobbying the Legislature, the judicial branch, or a state agency."

c. No funds or other resources received from the Division under this Agreement may be used directly or indirectly to influence legislation or any other official action by the Florida Legislature or any state agency.

d. The Sub-Recipient certifies, by its signature to this Agreement, that to the best of his or her knowledge and belief:

i. No Federal appropriated funds have been paid or will be paid, by or on behalf of the Sub-Recipient, to any person for influencing or attempting to influence an officer or

employee of any agency, a Member of Congress, an officer or employee of Congress, or an employee of a Member of Congress in connection with the awarding of any Federal contract, the making of any Federal grant, the making of any Federal loan, the entering into of any cooperative agreement, and the extension, continuation, renewal, amendment or modification of any Federal contract, grant, loan or cooperative agreement.

ii. If any funds other than Federal appropriated funds have been paid or will be paid to any person for influencing or attempting to influence an officer or employee of any agency, a Member of Congress, an officer or employee of Congress, or an employee of a Member of Congress in connection with this Federal contract, grant, loan or cooperative agreement, the Sub-Recipient shall complete and submit Standard Form-LLL, "Disclosure of Lobbying Activities."

iii. The Sub-Recipient shall require that this certification be included in the award documents for all subawards (including subcontracts, subgrants, and contracts under grants, loans, and cooperative agreements) and that all Sub-Recipients shall certify and disclose.

iv. This certification is a material representation of fact upon which reliance was placed when this transaction was made or entered into. Submission of this certification is a prerequisite for making or entering into this transaction imposed by Section 1352, Title 31, U.S. Code. Any person who fails to file the required certification shall be subject to a civil penalty of not less than $10,000 and not more than $100,000 for each such failure.

(24) COPYRIGHT, PATENT AND TRADEMARK

EXCEPT AS PROVIDED BELOW, ANY AND ALL PATENT RIGHTS ACCRUING UNDER OR IN CONNECTION WITH THE PERFORMANCE OF THIS AGREEMENT ARE HEREBY RESERVED TO THE STATE OF FLORIDA; AND, ANY AND ALL COPYRIGHTS ACCRUING UNDER OR IN CONNECTION WITH THE PERFORMANCE OF THIS AGREEMENT ARE HEREBY TRANSFERRED BY THE SUB-RECIPIENT TO THE STATE OF FLORIDA.

a. If the Sub-Recipient has a pre-existing patent or copyright, the Sub-Recipient shall retain all rights and entitlements to that pre-existing patent or copyright unless the Agreement provides otherwise.

b. If any discovery or invention is developed in the course of or as a result of work or services performed under this Agreement, or in any way connected with it, the Sub-Recipient shall refer the discovery or invention to the Division for a determination whether the State of Florida will seek patent protection in its name. Any patent rights accruing under or in connection with the performance of this Agreement are reserved to the State of Florida. If any books, manuals, films, or other copyrightable material are produced, the Sub-Recipient shall notify the Division. Any copyrights accruing under or in connection with the performance under this Agreement are transferred by the Sub-Recipient to the State of Florida.

c. Within thirty (30) days of execution of this Agreement, the Sub-Recipient shall disclose all intellectual properties relating to the performance of this Agreement which he or she knows or should know could give rise to a patent or copyright. The Sub-Recipient shall retain all rights and entitlements to any pre-existing intellectual property which is disclosed. Failure to disclose will indicate that no such property exists. The Division shall then, under Paragraph (24) b., have the right to all patents and copyrights which accrue during performance of the Agreement.

d. If the Sub-Recipient qualifies as a state university under Florida law, then, pursuant to section 1004.23, Florida Statutes, any invention conceived exclusively by the employees of the Sub-Recipient shall become the sole property of the Sub-Recipient. In the case of joint inventions, that is inventions made jointly by one or more employees of both parties hereto, each party shall have an equal, undivided interest in and to such joint inventions. The Division shall retain a perpetual, irrevocable, fully-paid, nonexclusive license, for its use and the use of its contractors of any resulting patented, copyrighted or trademarked work products, developed solely by the Sub-Recipient, under this Agreement, for Florida government purposes.

(25) LEGAL AUTHORIZATION

The Sub-Recipient certifies that it has the legal authority to receive the funds under this Agreement and that its governing body has authorized the execution and acceptance of this Agreement. The Sub-Recipient also certifies that the undersigned person has the authority to legally execute and bind Sub-Recipient to the terms of this Agreement.

(26) EQUAL OPPORTUNITY EMPLOYMENT

a. In accordance with 41 C.F.R. §60-1.4(b), the Sub-Recipient hereby agrees that it will incorporate or cause to be incorporated into any contract for construction work, or modification thereof, as defined in the regulations of the Secretary of Labor at 41 C.F.R. Chapter 60, which is paid for in whole or in part with funds obtained from the Federal Government or borrowed on the credit of the Federal Government pursuant to a grant, contract, loan insurance, or guarantee, or undertaken pursuant to any Federal program involving such grant, contract, loan, insurance, or guarantee, the following equal opportunity clause:

> During the performance of this contract, the contractor agrees as follows:
>
> i. The contractor will not discriminate against any employee or applicant for employment because of race, color, religion, sex, sexual orientation, gender identity, or national origin. The contractor will take affirmative action to ensure that applicants are employed, and that employees are treated during employment without regard to their race, color, religion, sex, sexual orientation, gender identity, or national origin. Such action shall include, but not be limited to the following:

Employment, upgrading, demotion, or transfer; recruitment or recruitment advertising; layoff or termination; rates of pay or other forms of compensation; and selection for training, including apprenticeship. The contractor agrees to post in conspicuous places, available to employees and applicants for employment, notices to be provided setting forth the provisions of this nondiscrimination clause.

ii. The contractor will, in all solicitations or advertisements for employees placed by or on behalf of the contractor, state that all qualified applicants will receive considerations for employment without regard to race, color, religion, sex, sexual orientation, gender identity, or national origin.

iii. The contractor will not discharge or in any other manner discriminate against any employee or applicant for employment because such employee or applicant has inquired about, discussed, or disclosed the compensation of the employee or applicant or another employee or applicant. This provision shall not apply to instances in which an employee who has access to the compensation information of other employees or applicants as a part of such employee's essential job functions discloses the compensation of such other employees or applicants to individuals who do not otherwise have access to such information, unless such disclosure is in response to a formal complaint or charge, in furtherance of an investigation, proceeding, hearing, or action, including an investigation conducted by the employer, or is consistent with the contractor's legal duty to furnish information.

iv. The contractor will send to each labor union or representative of workers with which he has a collective bargaining agreement or other contract or understanding, a notice to be provided advising the said labor union or workers' representatives of the contractor's commitments under this section, and shall post copies of the notice in conspicuous places available to employees and applicants for employment.

v. The contractor will comply with all provisions of Executive Order 11246 of September 24, 1965, and of the rules, regulations, and relevant orders of the Secretary of Labor.

vi. The contractor will furnish all information and reports required by Executive Order 11246 of September 24, 1965, and by rules, regulations, and orders of the Secretary of Labor, or pursuant thereto, and will permit access to his books, records, and accounts by the administering agency and the Secretary of Labor for purposes of investigation to ascertain compliance with such rules, regulations, and orders.

vii. In the event of the contractor's noncompliance with the nondiscrimination clauses of this contract or with any of the said rules, regulations, or orders, this contract may be canceled, terminated, or suspended in whole or in part and the contractor may be declared ineligible for further Government contracts or federally assisted construction contracts in accordance with procedures authorized in Executive Order 11246 of September 24, 1965, and such other sanctions may be imposed and remedies invoked as provided in Executive Order

11246 of September 24, 1965, or by rule, regulation, or order of the Secretary of Labor, or as otherwise provided by law.

viii. The contractor will include the portion of the sentence immediately preceding paragraph (1) and the provisions of paragraphs (1) through (8) in every subcontract or purchase order unless exempted by rules, regulations, or orders of the Secretary of Labor issued pursuant to section 204 of Executive Order 11246 of September 24, 1965, so that such provisions will be binding upon each subcontractor or vendor. The contractor will take such action with respect to any subcontract or purchase order as the administering agency may direct as a means of enforcing such provisions, including sanctions for noncompliance:

Provided, however, that in the event a contractor becomes involved in, or is threatened with, litigation with a subcontractor or vendor as a result of such direction by the administering agency the contractor may request the United States to enter into such litigation to protect the interests of the United States.

b. The Sub-Recipient further agrees that it will be bound by the above equal opportunity clause with respect to its own employment practices when it participates in federally assisted construction work: *Provided*, that if the applicant so participating is a State or local government, the above equal opportunity clause is not applicable to any agency, instrumentality or subdivision of such government which does not participate in work on or under the contract.

c. The Sub-Recipient agrees that it will assist and cooperate actively with the administering agency and the Secretary of Labor in obtaining the compliance of contractors and subcontractors with the equal opportunity clause and the rules, regulations, and relevant orders of the Secretary of Labor, that it will furnish the administering agency and the Secretary of Labor such information as they may require for the supervision of such compliance, and that it will otherwise assist the administering agency in the discharge of the agency's primary responsibility for securing compliance.

d. The Sub-Recipient further agrees that it will refrain from entering into any contract or contract modification subject to Executive Order 11246 of September 24, 1965, with a contractor debarred from, or who has not demonstrated eligibility for, Government contracts and federally assisted construction contracts pursuant to the Executive order and will carry out such sanctions and penalties for violation of the equal opportunity clause as may be imposed upon contractors and subcontractors by the administering agency or the Secretary of Labor pursuant to Part II, Subpart D of the Executive order. In addition, the Sub-Recipient agrees that if it fails or refuses to comply with these undertakings, the administering agency may take any or all of the following actions: cancel, terminate, or suspend in whole or in part this grant (contract, loan, insurance, guarantee); refrain from extending any further assistance to the Sub-Recipient under the program with respect to which the failure or refund occurred until satisfactory assurance of future compliance has been received from such Sub-Recipient; and refer the case to the Department of Justice for appropriate legal proceedings.

(27) COPELAND ANTI-KICKBACK ACT

The Sub-Recipient hereby agrees that, unless exempt under Federal law, it will incorporate or cause to be incorporated into any contract for construction work, or modification thereof, the following clause:

i. Contractor. The contractor shall comply with 18 U.S.C. § 874, 40 U.S.C. § 3145, and the requirements of 29 C.F.R. pt. 3 as may be applicable, which are incorporated by reference into this contract.

ii. Subcontracts. The contractor or subcontractor shall insert in any subcontracts the clause above and such other clauses as the FEMA may by appropriate instructions require, and also a clause requiring the subcontractors to include these clauses in any lower tier subcontracts. The prime contractor shall be responsible for the compliance by any subcontractor or lower tier subcontractor with all of these contract clauses.

iii. Breach. A breach of the contract clauses above may be grounds for termination of the contract, and for debarment as a contractor and subcontractor as provided in 29 C.F.R. § 5.12.

(28) CONTRACT WORK HOURS AND SAFETY STANDARDS

If the Sub-Recipient, with the funds authorized by this Agreement, enters into a contract that exceeds $100,000 and involves the employment of mechanics or laborers, then any such contract must include a provision for compliance with 40 U.S.C. 3702 and 3704, as supplemented by Department of Labor regulations (29 C.F.R. Part 5). Under 40 U.S.C. 3702 of the Act, each contractor must be required to compute the wages of every mechanic and laborer on the basis of a standard work week of 40 hours. Work in excess of the standard work week is permissible provided that the worker is compensated at a rate of not less than one and a half times the basic rate of pay for all hours worked in excess of 40 hours in the work week. The requirements of 40 U.S.C. 3704 are applicable to construction work and provide that no laborer or mechanic must be required to work in surroundings or under working conditions which are unsanitary, hazardous or dangerous. These requirements do not apply to the purchases of supplies or materials or articles ordinarily available on the open market, or contracts for transportation.

(29) CLEAN AIR ACT AND THE FEDERAL WATER POLLUTION CONTROL ACT

If the Sub-Recipient, with the funds authorized by this Agreement, enters into a contract that exceeds $150,000, then any such contract must include the following provision:

Contractor agrees to comply with all applicable standards, orders or regulations issued pursuant to the Clean Air Act (42 U.S.C. 7401-7671q) and the Federal Water Pollution Control Act as amended (33 U.S.C. 1251-1387), and will report violations to FEMA and the Regional Office of the Environmental Protection Agency (EPA).

(30) SUSPENSION AND DEBARMENT

If the Sub-Recipient, with the funds authorized by this Agreement, enters into a contract, then any such contract must include the following provisions:

i. This contract is a covered transaction for purposes of 2 C.F.R. pt. 180 and 2 C.F.R. pt. 3000. As such the contractor is required to verify that none of the contractor, its principals (defined at 2 C.F.R. § 180.995), or its affiliates (defined at 2 C.F.R. § 180.905) are excluded (defined at 2 C.F.R. § 180.940) or disqualified (defined at 2 C.F.R. § 180.935).

ii. The contractor must comply with 2 C.F.R. pt. 180, subpart C and 2 C.F.R. pt. 3000, subpart C and must include a requirement to comply with these regulations in any lower tier covered transaction it enters into.

iii. This certification is a material representation of fact relied upon by the Division. If it is later determined that the contractor did not comply with 2 C.F.R. pt. 180, subpart C and 2 C.F.R. pt. 3000, subpart C, in addition to remedies available to the Division, the Federal Government may pursue available remedies, including but not limited to suspension and/or debarment.

iv. The bidder or proposer agrees to comply with the requirements of 2 C.F.R. pt. 180, subpart C and 2 C.F.R. pt. 3000, subpart C while this offer is valid and throughout the period of any contract that may arise from this offer. The bidder or proposer further agrees to include a provision requiring such compliance in its lower tier covered transactions.

(31) BYRD ANTI-LOBBYING AMENDMENT

If the Sub-Recipient, with the funds authorized by this Agreement, enters into a contract, then any such contract must include the following clause:

Byrd Anti-Lobbying Amendment, 31 U.S.C. § 1352 (as amended). Contractors who apply or bid for an award of $100,000 or more shall file the required certification. Each tier certifies to the tier above that it will not and has not used Federal appropriated funds to pay any person or organization for influencing or attempting to influence an officer or employee of any agency, a member of Congress, officer or employee of Congress, or an employee of a member of Congress in connection with obtaining any Federal contract, grant, or any other award covered by 31 U.S.C. § 1352. Each tier shall also disclose any lobbying with non-Federal funds that takes place in connection with obtaining any Federal award. Such disclosures are forwarded from tier to tier up to the recipient.

If this subgrant agreement amount is $100,000 or more, the Sub-Recipient, and subcontractors as applicable, shall sign Attachment K – Certification Regarding Lobbying.

(32) CONTRACTING WITH SMALL AND MINORITY BUSINESSES, WOMEN'S BUSINESS ENTERPRISES, AND LABOR SURPLUS AREA FIRMS

a. If the Sub-Recipient, with the funds authorized by this Agreement, seeks to procure goods or services, then, in accordance with 2 C.F.R. §200.321, the Sub-Recipient shall take the following

affirmative steps to assure that minority businesses, women's business enterprises, and labor surplus area firms are used whenever possible:

i. Placing qualified small and minority businesses and women's business enterprises on solicitation lists;

ii. Assuring that small and minority businesses, and women's business enterprises are solicited whenever they are potential sources;

iii. Dividing total requirements, when economically feasible, into smaller tasks or quantities to permit maximum participation by small and minority businesses, and women's business enterprises;

iv. Establishing delivery schedules, where the requirement permits, which encourage participation by small and minority businesses, and women's business enterprises;

v. Using the services and assistance, as appropriate, of such organizations as the Small Business Administration and the Minority Business Development Agency of the Department of Commerce; and

vi. Requiring the prime contractor, if subcontracts are to be let, to take the affirmative steps listed in paragraphs i. through v. of this subparagraph.

b. The requirement outlined in subparagraph a. above, sometimes referred to as "socioeconomic contracting," does not impose an obligation to set aside either the solicitation or award of a contract to these types of firms. Rather, the requirement only imposes an obligation to carry out and document the six affirmative steps identified above.

c. The "socioeconomic contracting" requirement outlines the affirmative steps that the Sub-Recipient must take; the requirements do not preclude the Sub-Recipient from undertaking additional steps to involve small and minority businesses and women's business enterprises.

d. The requirement to divide total requirements, when economically feasible, into smaller tasks or quantities to permit maximum participation by small and minority businesses, and women's business enterprises, does not authorize the Sub-Recipient to break a single project down into smaller components in order to circumvent the micro-purchase or small purchase thresholds so as to utilize streamlined acquisition procedures (e.g. "project splitting").

(33) ASSURANCES

The Sub-Recipient shall comply with any Statement of Assurances incorporated as Attachment C.

IN WITNESS WHEREOF, the parties hereto have executed this Agreement.

SUB-RECIPIENT: CITY OF PORT ORANGE

By: _____

Name and Title: _____

Date: _____

FEID#: _____

STATE OF FLORIDA
DIVISION OF EMERGENCY MANAGEMENT

By: _____

Name and Title: Kevin Guthrie, Director

Date: _____

EXHIBIT – 1

THE FOLLOWING FEDERAL RESOURCES ARE AWARDED TO THE SUB-RECIPIENT UNDER THIS AGREEMENT:

Federal Program
Federal agency: **Federal Emergency Management Agency: Hazard Mitigation Grant**
Catalog of Federal Domestic Assistance title and number: **97.039**
Award amount: **$1,062,140.00**

THE FOLLOWING COMPLIANCE REQUIREMENTS APPLY TO THE FEDERAL RESOURCES AWARDED UNDER THIS AGREEMENT:

- 2 C.F.R. Part 200 Uniform Administrative Requirements, Cost Principles, and Audit Requirements for Federal Awards
- The Robert T. Stafford Disaster Relief and Emergency Assistance Act, Public Law 93-288, as amended, 42 U.S.C. 5121 et seq., and Related Authorities
- Sections 1361(A) of the National Flood Insurance Act of 1968, 42 U.S.C. 4104c, as amended by the National Flood Insurance Reform Act of 1994, Public Law 103-325 and the Bunning-Bereuter-Blumenauer Flood Insurance Reform Act of 2004, Public Law 108-264
- 31 C.F.R. Part 205 Rules and Procedures for Funds Transfers

Federal Program:

1. Sub-Recipient is to use funding to perform the following eligible activities:
   - Acquisition of hazard prone properties
2. Sub-Recipient is subject to all administrative and financial requirements as set forth in this Agreement, or will be in violation of the terms of the Agreement.

Attachment A

Budget and Scope of Work

STATEMENT OF PURPOSE:

The purpose of this Scope of Work is to acquire three (3) single-family residential structures in Port Orange, Volusia County, Florida, funded through the Hazard Mitigation Grant Program (HMGP) **DR-4734-002-R**, as approved by the Florida Division of Emergency Management (Division) and the Federal Emergency Management Agency (FEMA).

The Sub-Recipient, City of Port Orange, agrees to administer and complete the project per scope of work as submitted by the Sub-Recipient and subsequently approved by the Division and FEMA. The Sub-Recipient shall complete the work in accordance with all applicable Federal, State and Local Laws, Regulations and Codes. All acquisition activities shall be voluntary and conducted in compliance with 44 CFR Part 80.

PROJECT OVERVIEW:

As a Hazard Mitigation Grant Program project, the Sub-Recipient proposes to mitigate three (3) single-family residential structures located in Port Orange, Florida, 32127, 32129.

The scope of work proposes to acquire and demolish three (3) single-family residential structures built on a slab-on-grade foundation. Demolition activities include the removal of the foundation at least one foot below the finish grade, removal of utilities, septic tank, and underground improvements. All associated debris shall be removed to an approved landfill following demolition. These properties are prone to flooding from the Halifax River during hurricanes and have experienced frequent flooding. The proposed acquisition project intends to permanently eliminate the risk of future flood damage and protect the occupants from future flood loss.

Mitigation activities shall include the removal of all associated debris to clear the site and the land to be converted into open space and deed restricted as set forth in the FEMA program requirements concerning the acquisition of property for open space [44 CFR 206.434 (e)].

The project shall provide protection against a 100-year storm event. Activities shall be completed in strict compliance with Federal, State and Local applicable Rules and Regulations.

Project Locations:

ID#	Location	Coordinates
1.	5899 Trailwood Drive, Port Orange, Florida, 32127	(29.100922, -80.986862)
2.	798 Sugar House Drive, Port Orange, Florida, 32129	(29.145480, -81.010360)
3.	893 Sugar House Drive, Port Orange, Florida, 32129	(29.147720, -81.004780)

TASKS & DELIVERABLES:

A) Tasks

1) The Sub-Recipient shall procure the services of a qualified and licensed Florida contractor and execute a contract with the selected bidder to complete the scope of work as approved by the Division and FEMA. The Sub-Recipient shall select the qualified, licensed Florida contractor in accordance with the Sub-Recipient's procurement policy as well as all federal and state laws and regulations. All procurement activities shall contain sufficient source documentation and be in accordance with all applicable regulations.

The Sub-Recipient shall be responsible for furnishing or contracting all labor, materials, equipment, tools, transportation and supervision and for performing all work per sealed engineering designs and construction plans presented to the Division by the Sub-Recipient and subsequently approved by the Division and FEMA.

The Sub-Recipient and contractor shall be responsible for maintaining a safe and secure worksite for the duration of the work. The contractor shall maintain all work staging areas in a neat and presentable condition.

The Sub-Recipient shall ensure that no contractors or subcontractors are debarred or suspended from participating in federally funded projects.

The selected contractor shall have a current and valid occupational license/business tax receipt issued for the type of services being performed.

The Sub-Recipient shall provide documentation demonstrating the results of the procurement process. This shall include a rationale for the method of procurement and selection of contract type, contractor selection and/or rejection and bid tabulation and listing, and the basis of contract price.

The Sub-Recipient shall provide an executed "Debarment, Suspension, Ineligibility, Voluntary Exclusion Form" for each contractor and/or subcontractor performing services under this agreement.

Executed contracts with contractors and/or subcontractors shall be provided to the Division by the Sub-Recipient.

The Sub-Recipient shall provide copies of professional licenses for contractors selected to perform services. The Sub-Recipient shall provide a copy of a current and valid occupational license or business tax receipt issued for the type of services to be performed by the selected contractor.

2) The Sub-Recipient shall monitor and manage the acquisition of property subjected to or in danger of repetitive damage. The project shall be implemented in accordance with the approved scope of work previously presented to the Division by the Sub-Recipient and subsequently approved by the Division and FEMA. The Sub-Recipient shall ensure that all applicable state, local and federal laws and regulations are followed and documented, as appropriate.

   The project consists of the general construction and furnishing of all materials, equipment, labor and fees to acquire and demolish property.

   The Sub-Recipient shall fully perform the approved project, as described in the submitted documents, in accordance with the approved scope of work, budget line item, allocation of funds and applicable terms and conditions indicated herein. The Sub-Recipient shall not deviate from the approved project terms and conditions.

   Construction activities shall be completed by a qualified and licensed Florida contractor. All construction activities shall be monitored by the professional of record. The Sub-Recipient shall complete the project in accordance with all required permits. All work shall be completed in accordance with applicable codes and standards.

   Upon completion of the work, the Sub-Recipient shall schedule and participate in a final inspection of the completed project by the local municipal or county official, or another approving official, as applicable. The official shall inspect and certify that all installation was in accordance with the manufacturer's specifications. Any deficiencies found during this final inspection shall be corrected by the Sub-Recipient prior to Sub-Recipient's submittal of the final inspection request to the Division.

   Upon completion of Task 2, the Sub-Recipient shall submit the following documents with sufficient supporting documentation and provide a summary of all contract scope of work and scope of work changes, if any. Additional documentation for closeout shall include:

   a) Local Building Official Inspection Report, Local Permits, Certificate of Completion, Lead-based paint report, and Final Approval, as applicable.

b) Letter from corresponding entities certifying the termination of any utilities. This may include but is not limited to decommissioning of septic systems and potable water wells.

c) Copy of Warranty Deeds.

d) Letter verifying if human remains or archaeological features or deposits were encountered during project activities and, if so, how they were handled.

e) Letter verifying if prehistoric or historic artifacts or any other physical remains that could be associated with Native American, early European, or American settlement were encountered during project activities and, if so, how they were handled.

f) Verification letter or documentation showing that all construction activities occurred within the existing footprint of the property and that there was no staging of equipment in the areas designated as a floodplain.

g) Letter verifying that construction activities, staging activities, and storage did not occur in or impact any adjacent wetlands.

h) Letter verifying that construction vehicles and equipment were stored onsite during the project or at existing access points within the Sub-Recipient's right-of-way.

i) A Notice of Demolition or Asbestos Renovation forms and confirmation that any asbestos containing materials were taken to an authorized landfill for such materials.

j) Letter verifying that the Sub-Recipient complied with all federal, state, and local abatement and disposal requirements if any asbestos containing materials, lead-based paint, or other hazardous materials were found during construction activities.

k) Copy of all coordination with the Florida Department of Environmental Protection (FDEP) Division of Air Resource Management or the local pollution control agency that occurred prior to any demolition or renovations of buildings containing asbestos or asbestos containing material.

l) Letter verifying if any potentially hazardous waste, universal waste, or hazardous materials were encountered during project activities, and if so, how they were handled, managed, and disposed of in accordance with the requirements of local, state, and federal regulations, to include the site of disposal.

m) Copies of all required hazardous waste permits required by local, state and/or federal agencies must be submitted if any hazardous materials were encountered.

n) Letter verifying all demolition debris was disposed of in a manner consistent with FDEP regulations, to include the disposal location.

o) Proof of compliance with Project Conditions and Requirements contained herein.

3) During the course of this agreement, the Sub-Recipient shall submit requests for reimbursement on a quarterly basis. Adequate and complete source documentation shall be submitted to support all costs (federal share and local share) related to the project. In some cases, all project activities may not be fully complete prior to requesting reimbursement of costs incurred in completion of this scope of work; however, a partial reimbursement may be requested.

The Sub-Recipient shall submit an Affidavit signed by the Sub-Recipient's project personnel with each reimbursement request attesting to the completion of the work, that disbursements or payments were made in accordance with all agreement and regulatory conditions, and that reimbursement is due and has not been previously requested.

The Sub-Recipient shall maintain accurate time records. The Sub-Recipient shall ensure invoices are accurate and any contracted services were rendered within the terms and timelines of this agreement. All supporting documentation shall agree with the requested billing period. All costs submitted for reimbursement shall contain adequate source documentation, which may include but

not be limited to cancelled checks, bank statements, Electronic Funds Transfer, paid bills and invoices, payrolls, time and attendance records, contract and subcontract award documents.

Construction Expense: The Sub-Recipient shall pre-audit bills, invoices, and/or charges submitted by the contractors and subcontractors and pay the contractors and subcontractors for approved bills, invoices, and/or charges. Sub-Recipient shall ensure that all contractor/subcontractor bills, invoices, and/or charges are legitimate and clearly identify the activities being performed and associated costs.

Sub-Recipient Management Costs (SRMC) expenditure must adhere to FEMA Policy #104-11-1 HMGP Management Costs (Interim) signed November 14, 2018. FEMA defines management costs as any: Indirect costs, Direct administrative costs, and other administrative expenses associated with a specific project. Administrative costs are expenses incurred by a Sub-Recipient in managing and administering the federal award to ensure that federal, state requirements are met including: solicitation, development, review, and processing of sub-applications; delivery of technical assistance; quarterly progress and fiscal reporting; project monitoring; technical monitoring; compliance activities associated with federal procurement requirements; documentation of quality of work verification for quarterly reports and closeout; payment of claims; closeout review and liquidation; and records retention.

Any activities that are directly related to a project are not eligible under management costs. For example, architectural, engineering, and design services are project costs and cannot be included under management costs. Similarly, construction management activities that manage, coordinate, and supervise the construction process from project scoping to project completion are project costs. These activities cannot be included under management costs.

Due to Strategic Funds Management (SFM), SRMC Interim Policy requires management costs to be obligated in increments sufficient to cover Sub-Recipient needs, for no more than one year, unless contractual agreements require additional funding. FEMA has established a threshold where annual increments shall be applied to larger awards allowing smaller awards to be fully obligated. Obligations shall be handled by the size of the total subaward.

The Sub-Recipient shall pre-audit all SRMC source documentation – personnel, fringe benefits, travel, equipment, supplies, contractual, and indirect costs. A brief narrative is required to identify what the funds shall be used for. Documentation shall be detailed and clearly describe each approved task performed, hours devoted to each task, and the hourly rate charged including enough information to calculate the hourly rates based on payroll records. Employee benefits and tasks shall be clearly shown on the Personnel Activity Form, and all Personnel or Contractual SRMC shall be invoiced separate from all other project costs.

Project Management Expenses (only applies to disasters prior to August 1, 2017, all others adhere to FEMA Policy #104-11-1 for SRMC): The Sub-Recipient shall pre-audit source documentation such as payroll records, project time sheets, attendance logs, etc. Documentation shall be detailed information describing tasks performed, hours devoted to each task, and the hourly rate charged for each hour including enough information to calculate the hourly rates based on payroll records. Employee benefits shall be clearly shown.

The Division shall review all submitted requests for reimbursement for basic accuracy of information. Further, the Division shall ensure that no unauthorized work was completed prior to the approved project start date by verifying vendor and contractor invoices. The Division shall verify that reported costs were incurred in the performance of eligible work, that the approved work was completed, and that the mitigation measures are in compliance with the approved scope of work prior to processing any requests for reimbursement.

Review and approval of any third-party in-kind services, if applicable, shall be conducted by the Division in coordination with the Sub-Recipient.

Quarterly reports shall be submitted by the Sub-Recipient and received by the Division at the times provided in this agreement prior to the processing of any reimbursement.

The Sub-Recipient shall submit to the Division requests for reimbursement of actual construction and managerial costs related to the project as identified in the project application, sealed engineering designs, and construction plans. The requests for reimbursement shall include (per property):

a) Contractor, subcontractor, and/or vendor invoices which clearly display dates of services performed, description of services performed, location of services performed, cost of services performed, name of service provider and any other pertinent information;

b) Proof of payment from the Sub-Recipient to the contractor, subcontractor, and/or vendor for invoiced services;

c) Clear identification of amount of costs being requested for reimbursement as well as costs being applied against the local match amount.

The Sub-Recipient's final request for reimbursement shall include the final construction project cost. Supporting documentation shall show that all contractors and subcontractors have been paid.

B) Deliverables:

Mitigation Activities consist of acquiring, demolishing, and removing debris from three (3) single-family residential structures located in Port Orange, Florida, to include the removal of the foundation, utilities, septic tank, and underground improvements.

Mitigation activities shall include the removal of all associated debris to clear the site and the land to be converted into open space and deed restricted as set forth in the FEMA program requirements concerning the acquisition of property for open space [44 CFR 206.434 (e)].

The project shall provide protection against a 100-year storm event. Activities shall be completed in strict compliance with Federal, State and Local applicable Rules and Regulations.

Provided the Sub-Recipient performs in accordance with the Scope of Work outlined in this Agreement, the Division shall reimburse the Sub-Recipient based on the percentage of overall project completion.

PROJECT CONDITIONS AND REQUIREMENTS:

C) Engineering:

1) The Sub-Recipient shall submit to the Division an official letter stating that the project is 100% complete and ready for the Division's Final Inspection of the project.

2) The Sub-Recipient shall provide a copy of the Notice of Commencement, and any local official Inspection Report and/or Final Approval, as applicable.

3) The Sub-Recipient should submit a copy of the Warranty Deed.

4) The Sub-Recipient shall provide a copy of any letters issued by the utility companies involved, confirming that all services have been terminated, as applicable.

D) Environmental:

1) Sub-Recipient shall follow all applicable state, local and federal laws, regulations and requirements, and obtain (before starting project work) and comply with all required permits and approvals. Failure to obtain all appropriate federal, state, and local environmental permits and clearances may jeopardize federal funding.

2) Any change, addition or supplement to the approved Scope of Work that alters the project (including other work not funded by FEMA, but done substantially at the same time), regardless of the budget implications, shall require re-submission to the Division and FEMA for National Environmental Policy Act (NEPA) and National Historic Preservation Act (NHPA) re-evaluation before starting project work.

3) If human remains or intact archaeological features or deposits (e.g., arrowheads, pottery, glass, metal, etc.) are uncovered, work in the vicinity of the discovery shall stop immediately and all reasonable measures to avoid or minimize harm to the finds shall be taken. The Sub-Recipient shall ensure that archaeological discoveries are secured in place, that access to the sensitive areas is restricted, and that all reasonable measures are taken to avoid further disturbance of the discoveries. The Sub-Recipient's contractor shall provide immediate notice of such discoveries to the Sub-Recipient. The Sub-Recipient shall notify the Florida Division of Historical Resources, the Division, and FEMA within 24 hours of the discovery. Work in the vicinity of the discovery may not resume until FEMA has completed consultation with SHPO, Tribes, and other consulting parties as necessary.

   In the event that unmarked human remains are encountered during permitted activities, all work shall stop immediately, and the proper authorities notified in accordance with ***Florida Statutes, Section 872.05***.

4) Construction vehicles and equipment used for this project shall be maintained in good working order to minimize pollutant emissions.

5) If prehistoric or historic artifacts, such as pottery or ceramics, projectile points, dugout canoes, metal implements, historic building materials, or any other physical remains that could be associated with Native American, early European, or American settlement are encountered at any time within the project site area, the permitted project shall cease all activities involving subsurface disturbance in the vicinity of the discovery. The Sub-Recipient shall contact the Florida Department of State, Division of Historical Resources, Compliance Review Section at (850)-245-6333. Project activities shall not resume without verbal and/or written authorization. In the event that unmarked human remains are encountered during permitted activities, all work shall stop immediately and the proper authorities notified in accordance with Section 872.05, Florida Statutes.

6) All construction activities must occur within the existing footprint of the property. There shall be no staging of equipment in the areas designated as a floodplain. Failure to comply with these conditions may jeopardize FEMA funding; verification of compliance shall be required at project closeout.

7) Construction activities, staging activities, and storage shall not be located in or impact any adjacent wetlands. Failure to comply with this condition may jeopardize FEMA funding; verification of compliance shall be required at project closeout.

8) Construction vehicles and equipment shall be stored onsite during the project or at existing access points within the Sub-Recipient's right-of-way.

9) The Sub-Recipient shall handle, manage, and dispose of potentially hazardous waste, universal waste, and hazardous materials in accordance with the requirements of local, state, and federal regulations. These materials may include, but are not limited to asbestos, lead-based paint, laboratory reagents, propane cylinders, paints and solvents, coolants containing chlorofluorocarbons (CFCs), used oil, polychlorinated biphenyls (PCBs), other petroleum products, used oil filters, fuel filters, cleaning chemicals, pesticides, batteries, and unlabeled tanks and containers. Equipment that may include these materials are ice machines, refrigerators, generators, computers, televisions, mercury switches, fluorescent lights, fluorescent light ballasts, sandblast units, paint sprayers, etc. Failure to comply with these conditions may jeopardize FEMA funding; verification of compliance shall be required at project closeout.

10) If any asbestos containing material, lead-based paint, or other hazardous materials are found during the implementation of the project, the Sub-Recipient must comply with all federal, state, and local abatement and disposal requirements. Coordination with the Florida Department of Environmental Protection (FDEP) Division of Air Resource Management or the local pollution control agency prior to any demolition or renovations of buildings that contain asbestos or asbestos containing material is required. Failure to comply with these conditions may jeopardize FEMA funding; verification of compliance shall be required at project closeout.

11) The Sub-Recipient shall ensure that all demolition debris is disposed of in a manner consistent with FDEP regulations. Failure to comply with these conditions may jeopardize FEMA funding; verification of compliance shall be required at project closeout.

E) Programmatic:

1) A change in the scope of work *must* be approved by the Division and FEMA in advance regardless of the impact to the budget.

2) The Sub-Recipient must notify the Division as soon as significant developments become known, such as delays or adverse conditions that might raise costs or delay completion, or favorable conditions allowing lower costs or earlier completion.

3) The Sub-Recipient must "obtain prior written approval for any budget revision which would result in a need for additional funds" [44 CFR 13(c)], from the Division and FEMA.

4) Any extension of the Period of Performance shall be submitted to FEMA 60 days prior to the expiration date. Therefore, any request for a Period of Performance Extension shall be in writing and submitted, along with substantiation of the new expiration date and a new schedule of work, to the Division a minimum of seventy (70) days prior to the expiration date, for Division processing to FEMA.

5) A copy of the executed subcontract agreement must be forwarded to the Division within 10 days of execution.

6) The Sub-Recipient must avoid duplication of benefits between the HMGP and any other form of assistance, as required by Section 312 of the Stafford Act, and further clarification in 44 CFR 206.191. The Sub-Recipient shall identify and ensure that any duplication of benefits is properly documented and accounted for in the final mitigation offer.

7) If the Sub-Recipient is not the current titleholder of the affected properties, the Sub-Recipient shall provide documentation confirming the property acquisition and easement rights were obtained voluntarily. If condemnation or eminent domain is used to obtain easement rights, FEMA shall not pay for any associated costs or payments to the property owner. Furthermore, FEMA shall not consider it an eligible contribution to the Non-Federal cost share requirement and shall not financially participate in that component of a project if land or easements are obtained involuntarily.

8) The Sub-Recipient shall ensure that all property acquisition activities are voluntary and conducted in compliance with 44 CFR Part 80. In addition, the Sub-Recipient shall ensure that fair procedures are in place to compensate property owners and tenants affected by this property acquisition. This includes but may not be limited to determination of property values, the amount of mitigation offers, and the review and resolution of mitigation offer disputes.

9) The Sub-Recipient shall ensure that a title search is conducted on the subject properties. All known encumbrances that are incompatible with open space use shall be revised or extinguished to ensure that each property use is consistent with the open space requirements in 44 CFR Part 80 and applicable guidance.

10) The Sub-Recipient shall obtain a title insurance policy reflecting that all incompatible easements or other encumbrances to the title have been extinguished to demonstrate clear title in conformance with 44 CFR Section 80.17 (b).

11) The Sub-Recipient shall remove incompatible facilities by demolition or by relocation outside the hazard area within 90 days of settlement of the property transaction, in conformance with 44 CFR Section 80.17 (d).

12) The Sub-Recipient shall comply with the Uniform Relocation Assistance Act and document compliance as appropriate, if applicable.

13) Recording of the deed and required deed restrictions shall take place in accordance with State law and within 14 days after the settlement and closing.

14) The Sub-Recipient shall record each property purchased on the applicable quarterly report, when the property was acquired; and shall be reported by the property Identification number (ID#) from the Project Overview section of this document, and the applicable address.

15) The Sub-Recipient shall provide the following documentation for each property:

    a) An executed **Declaration and Release** Form (FEMA Form FF-104-FY-21-128).

    b) An executed **Statement of Voluntary Participation for Acquisition of Property for Purpose of Open Space** Form (FEMA Form FF-104-FY-21-124).

    c) An executed copy of the Model Statement of Assurances for Property Acquisition Projects or an equivalent acceptable to the Division and FEMA.

    d) A recorded copy of the Property Deed conveying full property interest to City of Port Orange. This deed must include the necessary elements of **"FEMA Model of Deed Restriction"** language with all required deed restrictions.

    e) A National Flood Insurance Program (NFIP) Repetitive Loss Update Worksheet (FEMA AW-501) for any property that is identified in the FEMA Repetitive Loss Database.

    f) Project specific information relating to duplication of benefits, as applicable.

16) Documentation demonstrating the market value of each property (pre-event or current, as appropriate) and how the market value was determined.

17) Special Flood Hazard Area (SFHA): Any area having special flood, mudflow, or flood-related erosion hazards, and shown on a Flood Hazard Boundary Map or a FIRM as Zone of A, AO, A1–A30, AE, A99, AH, AR, AR/A, AR/AE, AR/AH, AR/AO, AR/A1–A30, V1–V30, VE, or V. Per the National Flood Insurance Program (NFIP) regulations, if your property is within the Special Flood Hazard Area, where the National Flood Insurance Program's (NFIP's) floodplain management regulations must be enforced and the area where the mandatory purchase of flood insurance applies and shall be provided for closeout.

18) All closeout documentation shall be delivered to the Division 30 days prior to the Period of Performance (POP) date.

19) Special Conditions required on implementation of project:

    a) **EO 11988 CONDITION:** All construction activities must occur within the existing footprint of the property. There shall be no staging of equipment in the areas designated as a floodplain. Failure to comply with these conditions may jeopardize FEMA funding; verification of compliance shall be required at project closeout. **Source of condition:** Executive Order 11988 - Floodplains **Monitoring Required: No**

    b) **EO 11990 CONDITION:** Construction activities, staging activities, and storage shall not be located in or impact any adjacent wetlands. Failure to comply with this condition may jeopardize FEMA funding; verification of compliance shall be required at project closeout. **Source of condition:** Executive Order 11990 - Wetlands **Monitoring Required: No**

    c) **NHPA CONDITION:** If human remains or intact archeological features or deposits (e.g., arrowheads, pottery, glass, metal, etc.) are uncovered, work in the vicinity of the discovery shall stop immediately and all reasonable measures to avoid or minimize harm to the finds shall be taken. The Sub-Recipient shall ensure that archeological discoveries are secured in place, that access to the sensitive area is restricted, and that all reasonable measures are taken to avoid further disturbance of the discoveries. The Sub-Recipient's contractor shall provide immediate notice of such discoveries to the Sub-Recipient. The Sub-Recipient shall contact the Florida Division of Historic Resources and FEMA within 24 hours of the discovery. Work in the vicinity

of the discovery may not resume until FEMA has completed consultation with SHPO, Tribes, and other consulting parties as necessary. In the event that unmarked human remains are encountered during permitted activities; all work shall stop immediately, and the proper authorities notified in accordance with Florida Statutes, Section 872.05. **Source of condition:** National Historic Preservation Act (NHPA) **Monitoring Required: No**

d) **NHPA CONDITION:** If prehistoric or historic artifacts, such as pottery or ceramics, projectile points, dugout canoes, metal implements, historic building materials, or any other physical remains that could be associated with Native American, early European, or American settlement are encountered at any time within the project site area, the permitted project shall cease all activities involving subsurface disturbance in the vicinity of the discovery. The Sub-Recipient shall contact the Florida Department of State, Division of Historical Resources, Compliance Review Section at (850)-245-6333. Project activities shall not resume without verbal and/or written authorization. In the event that unmarked human remains are encountered during permitted activities, all work shall stop immediately and the proper authorities notified in accordance with Section 872.05, Florida Statutes. **Source of condition:** National Historic Preservation Act (NHPA) **Monitoring Required: No**

e) **NHPA CONDITION:** Construction vehicles and equipment shall be stored onsite during the project or at existing access points within the Sub-Recipient's right-of-way. **Source of condition:** National Historic Preservation Act (NHPA) **Monitoring Required: No**

f) **RCRA CONDITION:** The Sub-Recipient shall handle, manage, and dispose of potentially hazardous waste, universal waste, and hazardous materials in accordance with the requirements of local, state, and federal regulations. These materials may include, but are not limited to asbestos, lead-based paint, laboratory reagents, propane cylinders, paints and solvents, coolants containing chlorofluorocarbons (CFCs), used oil, polychlorinated biphenyls (PCBs), other petroleum products, used oil filters, fuel filters, cleaning chemicals, pesticides, batteries, and unlabeled tanks and containers. Equipment that may include these materials are ice machines, refrigerators, generators, computers, televisions, mercury switches, fluorescent lights, fluorescent light ballasts, sandblast units, paint sprayers, etc. Failure to comply with these conditions may jeopardize FEMA funding; verification of compliance shall be required at project closeout. **Source of condition:** Resource Conservation and Recovery Act, aka Solid Waste Disposal Act (RCRA) **Monitoring Required: No**

g) **SHM&SW CONDITION:** If any asbestos containing material, lead-based paint, or other hazardous materials are found during implementation of the project, the Sub-Recipient must comply with all federal, state, local abatement and disposal requirements. Coordination with the FDEP Division of Air Resource Management or the local pollution control agency PRIOR to any demolition or renovations of buildings that contain asbestos or asbestos containing materials is required. Failure to comply with these conditions may jeopardize FEMA funding; verification of compliance shall be required at project closeout. **Source of condition:** State Hazardous Materials and Solid Waste Laws **Monitoring Required: No**

h) **SHM&SW CONDITION:** The Sub-Recipient shall ensure that all demolition debris is disposed of in a manner consistent with FDEP regulations. Failure to comply with these conditions may jeopardize FEMA funding; verification of compliance shall be required at project closeout. **Source of condition:** State Hazardous Materials and Solid Waste Laws **Monitoring Required: No**

20) Sub-Recipient Management Costs (SRMC), implemented under the Disaster Relief and Recovery Act of 2018 (DRRA), amended Section 324 of the Stafford Act, and the Hazard Mitigation Grant Program Management Costs (Interim) FEMA Policy 104-11-1, provides 100% federal funding under HMGP to Sub-Recipients to efficiently manage the grant and complete activities in a timely manner.

a) SRMC must conform to 2 CFR Part 200, Subpart E, applicable program regulations, and Hazard Mitigation Assistance (HMA) Guidance (2015), ensuring costs are reasonable, allowable, allocable and necessary to the overall project.

b) Funding is for approved indirect costs, direct administrative costs, and administrative expenses associated with this specific project and shall have adequate documentation.

c) SRMC cannot exceed 5% of the total project costs awarded.

d) SRMC is 100% federally funded and shall be reimbursed based on actual costs incurred for each individual Request for Reimbursement (RFR) submitted with the required documentation.

e) SRMC shall be reconciled against actual costs on a quarterly basis and annual basis.

f) If the Final Project Reconciliation results in a reduction of total project costs, any resulting SRMC overpayment shall be reimbursed back to the State for return to FEMA prior to FEMA Closeout.

This is FEMA project number **4734-002-R**. It is funded under HMGP, FEMA-4734-DR-FL and must adhere to all program guidelines established for the HMGP in accordance with the PAS Operational Agreement for Disaster 4734.

FEMA awarded this project on April 14, 2025; with a Pre-Award date of January 15, 2024; the Period of Performance for this project shall end on **April 30, 2029.**

F) FINANCIAL CONSEQUENCES:

If the Sub-Recipient fails to comply with any term of the award, the Division shall take one or more of the following actions, as appropriate in the circumstances:

1) Temporarily withhold cash payments pending correction of the deficiency by the Sub-Recipient;

2) Disallow all or part of the cost of the activity or action not in compliance;

3) Wholly or partly suspend or terminate the current award for the Sub-Recipient's program;

4) Withhold further awards for the program; or

5) Take other remedies that may be legally available.

SCHEDULE OF WORK

State Contracting:	3	Months
Construction Plan/Technical Specifications:	3	Months
Bidding / Local Procurement:	3	Months
Title Search, Deed Restriction/Recording:	3	Months
Asbestos Test, Abatement:	3	Months
Environmental, Permitting, Bidding:	6	Months
Demolition/Site Grading/Landscaping:	12	Months
Local Inspections Compliance:	6	Months
State Final Inspection / Compliance:	6	Months
Closeout Compliance:	3	Months
Total Period of Performance:	**48**	**Months**

BUDGET

Line Item Budget*

	Project Cost	Federal Cost	Non-Federal Cost
Materials:	$1,198,000.00	$898,500.00	$299,500.00
Labor:	$95,280.00	$71,460.00	$23,820.00
Fees:	$53,930.00	$40,447.50	$13,482.50
**Pre-Award:	$1,150.00	$862.50	$287.50
Initial Agreement Amount:	**$1,348,360.00**	**$1,011,270.00**	**$337,090.00**
***Contingency Funds:	$0.00	$0.00	$0.00
Project Total:	**$1,348,360.00**	**$1,011,270.00**	**$337,090.00**
****SRMC**			
SRMC:	$20,000.00	$20,000.00	
SRMC-Pre-Award:	$30,870.00	$30,870.00	
SRMC Total:	**$50,870.00**	**$50,870.00**	

**Any line item amount in this Budget may be increased or decreased 10% or less, with the Division's approval, without an amendment to this Agreement being required, so long as the overall amount of the funds obligated under this Agreement is not increased.*

***This project has a Pre-Award, approved by FEMA in the amount of $1,150.00 project costs with a start date of **January 15, 2024**.*

**** This project has an estimated $0.00 in contingency funds.** *Per FEMA Hazard Mitigation Assistance Guidance Part VI, D.3.4 – Contingency funds are not automatically available for use. Prior to their release, contingency funds must be re-budgeted to another direct cost category and identified. Post-award changes to the budget require prior written approval from the Division (FDEM). The written request should demonstrate what unforeseen condition related to the project arose that required the use of contingency funds.*

Project Management costs are included for this project in the amount of $0.00.

***** Sub-Recipient Management Costs (SRMC) are included for this project in the amount of $50,870.00 in Federal funding.** *Per the Hazard Mitigation Grant Program Interim FEMA Policy 104-11-1, SRMC provides HMGP funding to Sub-Recipients to efficiently manage the grant and complete activities in a timely manner. SRMC must conform to 2 CFR Part 200, Subpart E, ensuring costs are reasonable, allowable, allocable and necessary to the overall project.*

SRMC cannot exceed 5% of the approved total project costs awarded and shall be reimbursed at 5% for each Request for Reimbursement (RFR) submitted with the required documentation.

If the Final Project Reconciliation results in a reduction of total project costs, any resulting SRMC overpayment shall be reimbursed back to the State for return to FEMA prior to FEMA Closeout.

*This project has a **SRMC Pre-Award,** approved by FEMA in the amount of $30,870.00, with a start date of **April 2, 2024**.*

Funding Summary Totals

Federal Share:	$ 1,011,270.00	(75.00%)
Non-Federal Share:	$337,090.00	(25.00%)
Total Project Cost:	**$1,348,360.00**	**(100.00%)**
SRMC (100% Federal)	$50,870.00	

Attachment B

Program Statutes and Regulations

The parties to this Agreement and the Hazard Mitigation Grant Program (HMGP) are generally governed by the following statutes and regulations:

(1) The Robert T. Stafford Disaster Relief and Emergency Assistance Act;

(2) 44 C.F.R. 7, 9, 18, 25, and 206. Reference (Title 44, up to date as of August 18, 2023, and last amended January 9, 2023.), and any other applicable FEMA policy memoranda and guidance documents;

(3) State of Florida Administrative Plan for the Hazard Mitigation Grant Program;

(4) Hazard Mitigation Assistance Program and Policy Guide, 2023;

(5) All applicable laws and regulations delineated in Attachment C of this Agreement.

In addition to the above statutes and regulations, the Sub-recipient must comply with the following:

The Sub-recipient shall fully perform the approved hazard mitigation project, as described in the Application and Attachment A (Budget and Scope of Work) attached to this Agreement, in accordance with approved scope of work indicated therein, the estimate of costs indicated therein, the allocation of funds indicated therein, and the terms and conditions of this Agreement. The Sub-recipient shall not deviate from the approved project and the terms and conditions of this Agreement. The Sub-recipient shall comply with any and all applicable codes and standards in performing work funded under this Agreement, and shall provide any appropriate maintenance and security for the project.

Any development permit issued by, or development activity undertaken by, the Sub-recipient and any land use permitted by or engaged in by the Sub-recipient, shall be consistent with the local comprehensive plan and land development regulations prepared and adopted pursuant to chapter 163, Part II, Florida Statutes. Funds shall be expended for, and development activities and land uses authorized for, only those uses which are permitted under the comprehensive plan and land development regulations. The Sub-recipient shall be responsible for ensuring that any development permit issued and any development activity or land use undertaken is, where applicable, also authorized by the Water Management District, the Florida Department of Environmental Protection, the Florida Department of Health, the Florida Game and Fish Commission, and any Federal, State, or local environmental or land use permitting authority, where required. The Sub-recipient agrees that any repair or construction shall be in accordance with applicable standards of safety, decency, and sanitation, and in conformity with applicable codes, specifications and standards.

The Sub-recipient will provide and maintain competent and adequate engineering supervision at the construction site to ensure that the completed work conforms with the approved plans and specifications and will furnish progress reports and such other information to HMGP as may be required.

If the hazard mitigation project described in Attachment A includes an acquisition or relocation project, then the Sub-recipient shall ensure that, as a condition of funding under this Agreement, the owner of the affected real property shall record in the public records of the county where it is located the following covenants and restrictions, which shall run with and apply to any property acquired, accepted, or from which a structure will be removed pursuant to the project.

(1) The property will be dedicated and maintained in perpetuity for a use that is compatible with open space, recreational, or wetlands management practices;

(2) No new structure will be erected on property other than:
   a. a public facility that is open on all sides and functionally related to a designed open space;
   b. a restroom; or

(3) A structure that the Director of the Federal Emergency Management Agency approves in writing before the commencement of the construction of the structure;

(4) After the date of the acquisition or relocation no application for disaster assistance for any purpose will be made to any Federal entity and no disaster assistance will be provided for the property by any Federal source; and

(5) If any of these covenants and restrictions is violated by the owner or by some third party with the knowledge of the owner, fee simple title to the Property described herein shall be conveyed to the Board of Trustees of the Internal Improvement Trust Fund of the State of Florida without further notice to the owner, its successors and assigns, and the owner, its successors and assigns shall forfeit all right, title and interest in and to the property.

HMGP Contract Manager will evaluate requests for cost overruns and submit to the regional Director written determination of cost overrun eligibility. Cost overruns shall meet Federal regulations set forth in 44 C.F.R. §206.438(b).

The National Environmental Policy Act (NEPA) stipulates that additions or amendments to a HMGP Sub-Recipient Scope of Work (SOW) shall be reviewed by all State and Federal agencies participating in the NEPA process.

As a reminder, the Sub-recipient must obtain prior approval from the State, before implementing changes to the approved project Scope of Work (SOW). Per the Uniform Administrative Requirements for Grants and Cooperative Agreements to State and Local Governments:

(1) For Construction projects, the grantee must "obtain prior written approval for any budget revision which result in a need for additional funds" (2 C.F.R. § 200.308);

(2) A change in the Scope of Work must be approved by FEMA in advance regardless of the budget implications; and

(3) The Sub-recipient must notify the State as soon as significant developments become known, such as delays or adverse conditions that might raise costs or delay completion, or favorable conditions allowing lower cost or earlier completion. Any extensions of the period of performance must be submitted to FEMA ninety (90) calendar days prior to the project expiration date. Reference, HMA Program and Policy Guide, 2023, G.3. Award Extensions, paragraph 3.

The Sub-recipient assures that it will comply with the following statutes and regulations to the extent applicable:

(1) 53 Federal Register 8034
(2) Federal Acquisition Regulations 31.2
(3) Section 1352, Title 31, US Code
(4) Chapter 473, Florida Statutes
(5) Chapter 215, Florida Statutes
(6) Section 768.28, Florida Statutes
(7) Chapter 119, Florida Statutes

(8) Section 216.181(6), Florida Statutes
(9) Cash Management Improvement Act of 1990
(10) American with Disabilities Act
(11) Section 112.061, Florida Statutes
(12) Immigration and Nationality Act
(13) Section 286.011, Florida Statutes
(14) 2 C.F.R. Part 200 – Uniform Administrative Requirements, Cost Principles, and Audit Requirements for Federal Awards
(15) Uniform Relocation Assistance and Real Property Acquisitions Act of 1970
(16) Title I of the Omnibus Crime Control and Safe Streets Act of 1968
(17) Juvenile Justice and Delinquency Prevention Act, or the Victims of Crime Act
(18) Omnibus Crime Control and Safe Streets Act of 1968, as amended
(19) Victims of Crime Act (as appropriate)
(20) Section 504 of the Rehabilitation Act of 1973, as amended
(21) Subtitle A, Title II of the Americans with Disabilities Act (ADA) (1990)
(22) Department of Justice regulations on disability discrimination, 28 C.F.R., Part 35 and Part 39
(23) 42 U.S.C. 5154a

Attachment C

Statement of Assurances

To the extent the following provisions apply to this Agreement, the Sub-recipient certifies that:

(a) It possesses legal authority to enter into this Agreement and to carry out the proposed program;

(b) Its governing body has duly adopted or passed as an official act of resolution, motion or similar action authorizing the execution of the hazard mitigation agreement with the Division of Emergency Management (DEM), including all understandings and assurances contained in it, and directing and authorizing the Sub-recipient's chief administrative officer or designee to act in connection with the application and to provide such additional information as may be required;

(c) No member of or delegate to the Congress of the United States, and no Resident Commissioner, shall receive any share or part of this Agreement or any benefit. No member, officer, or employee of the Sub-recipient or its designees or agents, no member of the governing body of the locality in which this program is situated, and no other public official of the locality or localities who exercises any functions or responsibilities with respect to the program during his tenure or for one year after, shall have any interest, direct or indirect, in any contract or subcontract, or the proceeds, for work be performed in connection with the program assisted under this Agreement. The Sub-recipient shall incorporate, in all contracts or subcontracts a provision prohibiting any interest pursuant to the purpose stated above;

(d) All Sub-recipient contracts for which the State Legislature is in any part a funding source, shall contain language to provide for termination with reasonable costs to be paid by the Sub-recipient for eligible contract work completed prior to the date the notice of suspension of funding was received by the Sub-recipient. Any cost incurred after a notice of suspension or termination is received by the Sub-recipient may not be funded with funds provided under this Agreement unless previously approved in writing by the Division. All Sub-recipient contracts shall contain provisions for termination for cause or convenience and shall provide for the method of payment in such event;

(e) It will comply with:

(1) Contract Work Hours and Safety Standards Act of 1962, 40 U.S.C. 327 et seq., requiring that mechanics and laborers (including watchmen and guards) employed on federally assisted contracts be paid wages of not less than one and one-half times their basic wage rates for all hours worked in excess of forty hours in a work week; and

(2) Federal Fair Labor Standards Act, 29 U.S.C. Section 201 et seq., requiring that covered employees be paid at least minimum prescribed wage, and also that they be paid one and one-half times their basic wage rates for all hours worked in excess of the prescribed work-week.

(f) It will comply with

(1) Title VI of the Civil Rights Act of 1964 (P.L. 88-352), and the regulations issued pursuant thereto, which provides that no person in the United States shall on the grounds of race, color, or national origin, be excluded from participation in, be denied the benefits of, or be otherwise subjected to discrimination under any program or activity for which the Sub-recipient received Federal financial assistance and will immediately take any measures necessary to effectuate this assurance. If any real property or structure thereon is provided or improved with the aid of Federal financial assistance extended to the Sub-

recipient, this assurance shall obligate the Sub-recipient, or in the case of any transfer of such property, any transferee, for the period during which the real property or structure is used for a purpose for which the Federal financial assistance is extended, or for another purpose involving the provision of similar services or benefits;

(2) Any prohibition against discrimination on the basis of age under the Age Discrimination Act of 1975, as amended (42 U.S.C. 6101-6107) which prohibits discrimination on the basis of age or with respect to otherwise qualifies handicapped individuals as provided in Section 504 of the Rehabilitation Act of 1973;

(3) Executive Order 11246, as amended by Executive Orders 11375 and 12086, and the regulations issued pursuant thereto, which provide that no person shall be discriminated against on the basis of race, color, religion, sex or national origin in all phases of employment during the performance of federal or federally assisted construction contracts; affirmative action to insure fair treatment in employment, upgrading, demotion, or transfer; recruitment or recruitment advertising; layoff/termination, rates of pay or other forms of compensation; and election for training and apprenticeship;

(g) It will establish safeguards to prohibit employees from using positions for a purpose that is or gives the appearance of being motivated by a desire for private gain for themselves or others, particularly those with whom they have family, business, or other ties pursuant to section 112.313 and section 112.3135, Florida Statutes;

(h) It will comply with the Anti-Kickback Act of 1986, 41 U.S.C. Chapter 87 which outlaws and prescribes penalties for “kickbacks” of wages in federally financed or assisted construction activities;

(i) It will comply with the provisions of 5 U.S.C. 7323 (further known as the Hatch Act) which limits the political activities of employees;

(j) It will comply with the flood insurance purchase and other requirements of the Flood Disaster Protection Act of 1973, as amended, 42 U.S.C. 50, including requirements regarding the purchase of flood insurance in communities where such insurance is available as a condition for the receipt of any Federal financial assistance for construction or acquisition purposes for use in any area having special flood hazards. The phrase “Federal financial assistance” includes any form of loan, grant, guaranty, insurance payment, rebate, subsidy, disaster assistance loan or grant, or any other form of direct or indirect Federal assistance;

For sites located within Special Flood Hazard Areas (SFHA), the Sub-recipient must include a FEMA Model Acknowledgement of Conditions of Mitigation of Property in a Special Flood Hazard Area with FEMA Grant Funds executed by the title holder with the closeout request verifying that certain SFHA requirements were satisfied on each of the properties. The Model Acknowledgement can be found at www.fema.gov/governmenta/grant/sfha_conditions.shtm

(k) It will require every building or facility (other than a privately owned residential structure) designed, constructed, or altered with funds provided under this Agreement to comply with the “Uniform Federal Accessibility Standards,” (AS) which is Appendix A to 41 C.F.R. Section 101-19.6 for general type buildings and Appendix A to 24 C.F.R., Part 40 for residential structures. The Sub-recipient will be responsible for conducting inspections to ensure compliance with these specifications by the contractor;

(l) It will, in connection with its performance of environmental assessments under the National Environmental Policy Act of 1969, comply with Section 106 of the National Historic Preservation Act of 1966 (54 U.S.C.), Executive Order 11593, 36 C.F.R., Part 800, and the Preservation of Archaeological and Historical Data Act of 1966 (54 U.S.C. 3125) by:

(1) Consulting with the State Historic Preservation Office to identify properties listed in or eligible for inclusion in the National Register of Historic Places that are subject to adverse effects (see 36 C.F.R., Section 800.8) by the proposed activity; and

(2) Complying with all requirements established by the State to avoid or mitigate adverse effects upon such properties.

(3) Abiding by the terms and conditions of the **"Programmatic Agreement Among the Federal Emergency Management Agency, the Florida State Historic Preservation Office, the Florida Division of Emergency Management and the Advisory Council on Historic Preservation, (PA)"** which addresses roles and responsibilities of Federal and State entities in implementing Section 106 of the National Historic Preservation Act (NHPA), 54 U.S.C., and implementing regulations in 36 C.F.R., Part 800.

(4) When any of the Sub-recipient's projects funded under this Agreement may affect a historic property, as defined in 36 C.F.R., Part 800.16 (l)(1), the Federal Emergency Management Agency (FEMA) may require the Sub-recipient to review the eligible scope of work in consultation with the State Historic Preservation Office (SHPO) and suggest methods of repair or construction that will conform with the recommended approaches set out in the **Secretary of Interior's Standards for Rehabilitation and Guidelines for Rehabilitating Historic Buildings 1992 (Standards),** the **Secretary of the Interior's Guidelines for Archeological Documentation (Guidelines)** (48 Federal Register 44734-37), or any other applicable Secretary of Interior standards. If FEMA determines that the eligible scope of work will not conform with the **Standards**, the Sub-recipient agrees to participate in consultations to develop, and after execution by all parties, to abide by, a written agreement that establishes mitigation and recondition measures, including but not limited to, impacts to archeological sites, and the salvage, storage, and reuse of any significant architectural features that may otherwise be demolished.

(5) The Sub-recipient agrees to notify FEMA and the Division if any project funded under this Agreement will involve ground disturbing activities, including, but not limited to: subsurface disturbance; removal of trees; excavation of footings and foundations, and installation of utilities (such as water, sewer, storm drains, electrical, gas, leach lines and septic tanks) except where these activities are restricted solely to areas previously disturbed by the installation, replacement or maintenance of such utilities. FEMA will request the SHPO's opinion on the potential that archeological properties may be present and be affected by such activities. The SHPO will advise the Sub-recipient on any feasible steps to be accomplished to avoid any National Register eligible archeological property or will make recommendations for the development of a treatment plan for the recovery or archeological data from the property.

If the Sub-recipient is unable to avoid the archeological property, develop, in consultation with SHPO, a treatment plan consistent with the **Guidelines** and take into account the Advisory Council on Historic Preservation (Council) publication "Treatment of Archeological Properties". The Sub-recipient shall forward information regarding the treatment plan to FEMA, the SHPO and the Council for review. If the SHPO and the Council do not object within fifteen (15) calendar days of receipt of the treatment plan, FEMA may direct the Sub-recipient to implement the treatment plan. If either the Council or the SHPO object, Sub-recipient shall not proceed with the project until the objection is resolved.

(6) The Sub-recipient shall notify the Division and FEMA as soon as practicable: (a) of any changes in the approved scope of work for a National Register eligible or listed property; (b) of all changes to a project that may result in a supplemental DSR or modify a HMGP project for a National Register eligible or listed property; (c) if it appears that a project funded under this Agreement will affect a previously unidentified property that may be

eligible for inclusion in the National Register or affect a known historic property in an unanticipated manner. The Sub-recipient acknowledges that FEMA may require the Sub-recipient to stop construction in the vicinity of the discovery of a previously unidentified property that may eligible for inclusion in the National Register or upon learning that construction may affect a known historic property in an unanticipated manner. The Sub-recipient further acknowledges that FEMA may require the Sub-recipient to take all reasonable measures to avoid or minimize harm to such property until FEMA concludes consultation with the SHPO. The Sub-recipient also acknowledges that FEMA will require, and the Sub-recipient shall comply with, modifications to the project scope of work necessary to implement recommendations to address the project and the property.

(7) The Sub-recipient acknowledges that, unless FEMA specifically stipulates otherwise, it shall not receive funding for projects when, with intent to avoid the requirements of the PA or the NHPA, the Sub-recipient intentionally and significantly adversely affects a historic property, or having the legal power to prevent it, allowed such significant adverse effect to occur.

(m) It will comply with applicable provisions of the following laws and policies prohibiting discrimination:

(1) Title VI of the Civil Rights Act of 1964, as amended, which prohibits discrimination based on race, color, or national origin (including limited English proficiency).

(2) Section 504 of the Rehabilitation Act of 1973, as amended, which prohibits discrimination based on disability.

(3) Title IX of the Education Amendments Act of 1972, as amended, which prohibits discrimination based on sex in education programs or activities.

(4) Age Discrimination Act of 1975, which prohibits discrimination based on age.

(5) U.S. Department of Homeland Security regulation 6 C.F.R. Part 19, which prohibits discrimination based on religion in social service programs.

(n) It will comply with Title IX of the Education Amendments of 1972, as amended (20 U.S.C. 1681-1683 and 1685-1686) which prohibits discrimination on the basis of sex;

(o) It will comply with the Comprehensive Alcohol Abuse and Alcoholism Prevention, Treatment and Rehabilitation Act of 1970, (42 U.S.C. 4541-45-94) relating to nondiscrimination on the basis of alcohol abuse or alcoholism;

(p) It will comply with 523 and 527 of the Public Health Service Act of 1912 (42 U.S.C. 290 dd-3 and 290 ee-3), as amended, relating to confidentiality of alcohol and drug abuse patient records;

(q) It will comply with Lead-Based Paint Poison Prevention Act (42 U.S.C. 4821 et seq.) which prohibits the use of lead based paint in construction of rehabilitation or residential structures;

(r) It will comply with the Energy Policy and Conservation Act (P.L. 94-163; 42 U.S.C. 6201-6422), and the provisions of the State Energy Conservation Plan adopted pursuant thereto;

(s) It will comply with the Laboratory Animal Welfare Act of 1966, (7 U.S.C. 2131-2159), pertaining to the care, handling, and treatment of warm blooded animals held for research, teaching, or other activities supported by an award of assistance under this Agreement;

(t) It will comply with Title VIII of the Civil Rights Act of 1968, (42 U.S.C 2000c and 42 U.S.C. 3601-3619), as amended, relating to non-discrimination in the sale, rental, or financing of housing, and

Title VI of the Civil Rights Act of 1964 (P.L. 88-352), which prohibits discrimination on the basis of race, color or national origin;

(u) It will comply with the Clean Air Act of 1955, as amended, 42 U.S.C. 7401-7675;

(v) It will comply with the Clean Water Act of 1977, as amended, 33 U.S.C. 1251-1388

(w) It will comply with the endangered Species Act of 1973, 16 U.S.C. 1531-1544;

(x) It will comply with the Intergovernmental Personnel Act of 1970, 42 U.S.C. 4701-4772;

(y) It will assist the awarding agency in assuring compliance with the National Historic Preservation Act of 1966, as amended, 54 U.S.C.;

(z) It will comply with environmental standards which may be prescribed pursuant to the National Environmental Policy Act of 1969, 42 U.S.C. 4321-4347;

(aa) It will assist the awarding agency in assuring compliance with the Preservation of Archeological and Historical Preservation Act of 1966, 16 U.S.C. 54 U.S.C. 3125

(bb) It will comply with the Rehabilitation Act of 1973, Section 504, 29 U.S.C. 794, regarding non-discrimination;

(cc) It will comply with the environmental standards which may be prescribed pursuant to the Safe Drinking Water Act of 1974, 42 U.S.C. 300f-300j-27, regarding the protection of underground water sources;

(dd) It will comply with the requirements of Titles II and III of the Uniform Relocation Assistance and Property Acquisition Policies Act of 1970, 42 U.S.C. 4621-4638, which provide for fair and equitable treatment of persons displaced or whose property is acquired as a result of Federal or Federally assisted programs;

(ee) It will comply with the Wild and Scenic Rivers Act of 1968, 16 U.S.C. 1271-1287, related to protecting components or potential components of the national wild and scenic rivers system;

(ff) It will comply with the following Executive Orders: EO 11514 (NEPA); EO 11738 (violating facilities); EO 11988 (Floodplain Management); EO 11990 (Wetlands); and EO 12898 (Environmental Justice);

(gg) It will comply with the Coastal Barrier Resources Act of 1977, 16 U.S.C. 3501-3510;

(hh) It will assure project consistency with the approved State program developed under the Coastal Zone Management Act of 1972, 16 U.S.C. 1451-14674; and

(ii) It will comply with the Fish and Wildlife Coordination Act of 1958, 16 U.S.C. 661-668.

(jj) With respect to demolition activities, it will:

(1) Create and make available documentation sufficient to demonstrate that the Sub-recipient and its demolition contractor have sufficient manpower and equipment to comply with the obligations as outlined in this Agreement.

(2) Return the property to its natural state as though no improvements had ever been contained thereon.

(3) Furnish documentation of all qualified personnel, licenses and all equipment necessary to inspect buildings located in the Sub-recipient's jurisdiction to detect the presence of asbestos and lead in accordance with requirements of the U.S. Environmental Protection Agency, the Florida Department of Environmental Protection and the County Health Department.

(4) Provide documentation of the inspection results for each structure to indicate:
   a. Safety Hazard Present
   b. Health Hazards Present
   c. Hazardous Materials Present

(5) Provide supervision over contractors or employees employed by the Sub-recipient to remove asbestos and lead from demolished or otherwise applicable structures.

(6) Leave the demolished site clean, level and free of debris.

(7) Notify the Division promptly of any unusual existing condition which hampers the contractor's work.

(8) Obtain all required permits.

(9) Provide addresses and marked maps for each site where water wells and septic tanks are to be closed along with the number of wells and septic tanks located on each site. Provide documentation of closures.

(10) Comply with mandatory standards and policies relating to energy efficiency which are contained in the State Energy Conservation Plan issued in compliance with the Energy Policy and Conservation Act (Public Law 94-163).

(11) Comply with all applicable standards, orders, or requirements issued under Section 112 and 306 of the Clean Air Act (42 U.S.C. 1857), Section 508 of the Clean Water Act (33 U.S.C. 1251-1388), Executive Order 11738, and the U.S. Environmental Protection Agency regulations (40 C.F.R., Part 15 and 61). This clause shall be added to any subcontracts.

(12) Provide documentation of public notices for demolition activities.

Attachment D

REQUEST FOR ADVANCE OR REIMBURSEMENT
OF HAZARD MITIGATION ASSISTANCE PROGRAM FUNDS

SUB-RECIPIENT: City of Port Orange

REMIT ADDRESS: City of Port Orange Depository Account, Truist Bank, 3500 East Silver Springs Boulevard

CITY: Ocala STATE: Florida ZIP CODE: 34470-6404

PROJECT TYPE: Acquisition PROJECT #: 4734-002-R

PROGRAM: Hazard Mitigation Grant Program CONTRACT #: H1201

BUDGET: _____ FEDERAL SHARE: _____ LOCAL: _____

ADVANCED RECEIVED: _____ N/A _____ AMOUNT: _____ SETTLED? _____

Invoice Period: _____ through _____ Payment No: _____

Total of Previous Payments to Date: _____ (Federal)
Total of Previous SRMC to Date: (SRMC Federal)
Total Federal to Date: _____ (Total Federal Paid)

Eligible Amount 100% (Current Request)	Obligated Federal Amount 75%	Obligated Local Non-Federal 25%	**Division Use Only**	
			Approved	Comments

TOTAL CURRENT REQUEST: $ _____

By signing this report, I certify to the best of my knowledge and belief that the report is true, complete, and accurate, and the expenditures, disbursements and cash receipts are for the purposes and objectives set forth in the terms and conditions of the Federal award. I am aware that any false, fictitious, or fraudulent information, or the omission of any material fact, may subject me to criminal, civil or administrative penalties for fraud, false statements, false claims or otherwise. (U.S. Code Title 18, Section 1001 and Title 31, Sections 3729-3730 and 3801-3812.

SUB-RECIPIENT SIGNATURE: _____

NAME: _____ TITLE: _____ DATE: _____

TO BE COMPLETED BY THE DIVISION

APPROVED PROJECT TOTAL $ _____

APPROVED SRMC TOTAL: $ _____

APPROVED FOR PAYMENT $ _____

_____
DIVISION DIRECTOR

_____
DATE

Attachment D (cont.)
SUMMARY OF DOCUMENTATION IN SUPPORT OF AMOUNT CLAIMED FOR ELIGIBLE DISASTER WORK UNDER THE HAZARD MITIGATION ASSISTANCE PROGRAM

SUB-RECIPIENT: City of Port Orange PAYMENT #:

PROJECT TYPE: Acquisition PROJECT #: 4734-002-R

PROGRAM: Hazard Mitigation Grant Program CONTRACT #: H1201

	REF NO[2]	DATE[3]	DOCUMENTATION[4]	*(Check) AMOUNT*	ELIGIBLE COSTS (100%)
1					
2					
3					
4					
5					
6					
7					
8					
This payment represents		***%***	***completion of the project.***	***TOTAL***	

[2] *Recipient's internal reference number (e.g., Invoice, Receipt, Warrant, Voucher, Claim Check, or Schedule #)*
[3] *Date of delivery of articles, completion of work or performance services. (per document)*
[4] *List Documentation (Recipient's payroll, material out of recipient's stock, recipient owned equipment and name of vendor or contractor) by category (Materials, Labor, Fees) and line item in the approved project line item budget. Provide a brief description of the articles or services. List service dates per each invoice.*

Attachment E
JUSTIFICATION OF ADVANCE PAYMENT

SUB-RECIPIENT: CITY OF PORT ORANGE

If you are requesting an advance, indicate same by checking the box below.

[ ] **ADVANCE REQUESTED** Advance payment of $ _____ is requested. Balance of payments will be made on a reimbursement basis. These funds are needed to pay staff, award benefits to clients, duplicate forms and purchase start-up supplies and equipment. We would not be able to operate the program without this advance.

If you are requesting an advance, complete the following chart and line item justification below. PLEASE NOTE: Calculate your estimated expenses at 100% of your expected needs for ninety (90) days. Submit Attachment D with the cost share breakdown along with Attachment E and all supporting documentation.

ESTIMATED EXPENSES

BUDGET CATEGORY/LINE ITEMS (list applicable line items)	**20___-20___ Anticipated Expenditures for First Three Months of Contract**
For example **ADMINISTRATIVE COSTS** **(Include Secondary Administration.)**	
For example **PROGRAM EXPENSES**	
TOTAL EXPENSES	

LINE ITEM JUSTIFICATION **(For each line item, provide a detailed justification explaining the need for the cash advance. The justification must include supporting documentation that clearly shows the advance will be expended within the first ninety (90) days of the contract term. Support documentation should include quotes for purchases, delivery timelines, salary and expense projections, etc. to provide the Division reasonable and necessary support that the advance will be expended within the first ninety (90) days of the contract term. Any advance funds not expended within the first ninety (90) days of the contract term as evidenced by copies of invoices and cancelled checks as required by the Budget and Scope of work showing 100% of expenditures for the 90 day period shall be returned to the Division Cashier, 2555 Shumard Oak Boulevard, Tallahassee, Florida 32399, within thirty (30) days of receipt, along with any interest earned on the advance.**

Attachment F

QUARTERLY REPORT FORM

***Instructions**: Complete and submit this form to State Project Manager within15-days after each quarter:*

SUB-RECIPIENT: City of Port Orange **PROJECT #:** 4734-002-R

PROJECT TYPE: Acquisition **CONTRACT #:** H1201

PROGRAM: Hazard Mitigation Grant Program **QUARTER ENDING:** _____

Advance Payment Information:

Advance Received ☐ N/A ☐ Amount: $ _____ Advance Settled? Yes ☐ No ☐

Financial Amount to Date:

Sub-Recipient Total Project Expenditures to date (federal & local): $

Target Dates (State Agreement):

Contract Execution Date: _____ Contract Expiration Date: _____

Date Deliverables Submitted: _____ Closeout Requested Date: _____

Describe **Milestones** achieved during this quarter:

Project Proceeding on **Schedule**? ☐ Yes ☐ No (*If No, Describe under **Issues** below)*

Percentage of Milestones completed to Date: _____%

Describe Activities - Milestones completed this quarter only:

Schedule of the Milestones-Activities:

Milestone	**Dates** (estimated)
State Contracting	
Closeout Compliance	
Estimated Project Completion Date:	

Issues or circumstances affecting completion date, milestones, scope of work, and/or cost:

Cost Status: ☐ Cost Unchanged ☐ Under Budget ☐ Over Budget

Cost / Financial **Comments:**

NOTE: Events may occur between quarterly reports, which have significant impact upon your project(s), such as anticipated overruns, changes in scope of work, extensions. Contact the Division as soon as these conditions are known, otherwise you could be non-compliant with your sub-grant award.

Sub-Recipient Contract Representative (POC): _____

Signature: _____ Phone: _____

~ To be completed by Florida Division of Emergency Management Project Manager ~

Project Manager Statement: ☐ *No Action Required, OR*

☐ *Action Required:* _____

PM Percentage of Activates competed per PM Review QR Milestones Spreadsheet: ____%

Date Reviewed: _____ *Reviewer:* _____ *Project Manager*

Attachment G

Warranties and Representations

Financial Management

The Sub-Recipient's financial management system must comply with 2 C.F.R. §200.302.

Procurements

Any procurement undertaken with funds authorized by this Agreement must comply with the requirements of 2 C.F.R. §200, Part D—Post Federal Award Requirements—Procurement Standards (2 C.F.R. §§200.317 through 200.327).

Business Hours

The Sub-Recipient shall have its offices open for business, with the entrance door open to the public, and at least one employee on site, from: **8:00 AM - 5:00 PM, Monday Thru Friday, as applicable.**

Licensing and Permitting

All subcontractors or employees hired by the Sub-Recipient shall have all current licenses and permits required for all of the particular work for which they are hired by the Sub-Recipient.

Attachment H

Certification Regarding
Debarment, Suspension, Ineligibility
And Voluntary Exclusion

Subcontractor Covered Transactions

The prospective subcontractor, _____, of the Sub-Recipient certifies, by submission of this document, that neither it, its principals, nor affiliates are presently debarred, suspended, proposed for debarment, declared ineligible, voluntarily excluded, or disqualified from participation in this transaction by any Federal department or agency.

SUBCONTRACTOR

_____

By: _____
Signature

_____
Name and Title

_____
Street Address

_____
City, State, Zip

_____
Date

City of Port Orange
Sub-Recipient's Name

H1201
DEM Contract Number

4734-002-R
FEMA Project Number

Attachment I

Federal Funding Accountability and Transparency Act

Instructions and Worksheet

PURPOSE: The Federal Funding Accountability and Transparency Act (FFATA) was signed on September 26, 2006. The intent of this legislation is to empower every American with the ability to hold the government accountable for each spending decision. The FFATA legislation requires information on federal awards (federal assistance and expenditures) be made available to the public via a single, searchable website, which is http://www.usaspending.gov/.

The FFATA Sub-award Reporting System (FSRS) is the reporting tool the Florida Division of Emergency Management ("FDEM" or "Division") must use to capture and report sub-award and executive compensation data regarding first-tier sub-awards that obligate $25,000 or more in Federal funds (excluding Recovery funds as defined in section 1512(a)(2) of the American Recovery and Reinvestment Act of 2009, Pub. L. 111-5).

Note: This "Instructions and Worksheet" is meant to explain the requirements of the FFATA and give clarity to the FFATA Form distributed to sub-awardees for completion. All pertinent information below should be filled out, signed, and returned to the project manager.

ORGANIZATION AND PROJECT INFORMATION

The following information must be provided to the FDEM prior to the FDEM's issuance of a sub-award (Agreement) that obligates $25,000 or more in federal funds as described above. Please provide the following information and return the signed form to the Division as requested.

PROJECT #: 4734-002-R

FUNDING AGENCY: Federal Emergency Management Agency

AWARD AMOUNT: $ 1,062,140.00

OBLIGATION/ACTION DATE: January 15, 2024

SUBAWARD DATE (if applicable): _____

UEID/SAM#: LV8ZD1LYF3H4

*If your company or organization does not have a UEID/SAM number, you will need to obtain one from https://sam.gov/content/entity-registrationThe process to request a UEID/SAM number takes about ten minutes and is free of charge.

BUSINESS NAME: _____

DBA NAME (IF APPLICABLE): _____

PRINCIPAL PLACE OF BUSINESS ADDRESS: _____

ADDRESS LINE 1: _____

ADDRESS LINE 2: _____

ADDRESS LINE 3: _____

CITY _____ STATE _____ ZIP CODE+4** _____

PARENT COMPANY UEID/SAM# (if applicable): _____

CATALOG OF FEDERAL DOMESTIC ASSISTANCE (CFDA#): _____

DESCRIPTION OF PROJECT (Up to 4000 Characters)

As a Hazard Mitigation Grant Program project, the Sub-Recipient proposes to mitigate three (3) single-family residential structures located in Port Orange, Florida, 32127, 32129.

The scope of work proposes to acquire and demolish three (3) single-family residential structures built on a slab-on-grade foundation. Demolition activities include the removal of the foundation at least one foot below the finish grade, removal of utilities, septic tank, and underground improvements. All associated debris shall be removed to an approved landfill following demolition. These properties are prone to flooding from the Halifax River during hurricanes and have experienced frequent flooding. The proposed acquisition project intends to permanently eliminate the risk of future flood damage and protect the occupants from future flood loss.

Mitigation activities shall include the removal of all associated debris to clear the site and the land to be converted into open space and deed restricted as set forth in the FEMA program requirements concerning the acquisition of property for open space [44 CFR 206.434 (e)].

The project shall provide protection against a 100-year storm event. Activities shall be completed in strict compliance with Federal, State and Local applicable Rules and Regulations.

Project Locations:

ID#	Location	Coordinates
1.	5899 Trailwood Drive, Port Orange, Florida, 32127	(29.100922, -80.986862)
2.	798 Sugar House Drive, Port Orange, Florida, 32129	(29.145480, -81.010360)
3.	893 Sugar House Drive, Port Orange, Florida, 32129	(29.147720, -81.004780)

Verify the approved project description above, if there is any discrepancy, please contact the project manager.

PRINCIPAL PLACE OF PROJECT PERFORMANCE (IF DIFFERENT THAN PRINCIPAL PLACE OF BUSINESS):

ADDRESS LINE 1: _____

ADDRESS LINE 2: _____

ADDRESS LINE 3: _____

CITY _____ STATE _____ ZIP CODE+4** _____

CONGRESSIONAL DISTRICT FOR PRINCIPAL PLACE OF PROJECT PERFORMANCE:

**Providing the Zip+4 ensures that the correct Congressional District is reported.

EXECUTIVE COMPENSATION INFORMATION:

1. In your business or organization's previous fiscal year, did your business or organization (including parent organization, all branches, and all affiliates worldwide) receive (a) 80 percent or more of your annual gross revenues from Federal procurement contracts (and subcontracts) and Federal financial assistance (e.g. loans, grants, subgrants, and/or cooperative agreements, etc.) subject to the Transparency Act, as defined at 2 C.F.R. 170.320; , (b) $25,000,000 or more in annual gross revenues from U.S. Federal procurement contracts (and subcontracts) and Federal financial assistance (e.g. loans, grants, subgrants, and/or cooperative agreements, etc.) subject to the Transparency Act?

   Yes ☐ No ☐

If the answer to Question 1 is "Yes," continue to Question 2. If the answer to Question 1 is "No", move to the signature block below to complete the certification and submittal process.

2. Does the public have access to information about the compensation of the executives in your business or organization (including parent organization, all branches, and all affiliates worldwide) through periodic reports filed under section 13(a) or 15(d) of the Securities Exchange Act of 1934 (15 U.S.C. 78m(a), 78o(d)) Section 6104 of the Internal Revenue Code of 1986?

   Yes ☐ No ☐

If the answer to Question 2 is "Yes," move to the signature block below to complete the certification and submittal process. [Note: Securities Exchange Commission information should be accessible at http//www.sec.gov/answers/execomp.htm. Requests for Internal Revenue Service (IRS) information should be directed to the local IRS for further assistance.]

If the answer to Question 2 is "No" FFATA reporting is required. Provide the information required in the "TOTAL COMPENSATION CHART FOR MOST RECENTLY COMPLETED FISCAL YEAR" appearing below to report the "Total Compensation" for the five (5) most highly compensated "Executives", in rank order, in your organization. For purposes of this request, the following terms apply as defined in 2 C.F.R. Ch. 1 Part 170 Appendix A:

"Executive" is defined as "officers, managing partners, or other employees in management positions".

"Total Compensation" is defined as the cash and noncash dollar value earned by the executive during the most recently completed fiscal year and includes the following:

i. Salary and bonus.

ii. Awards of stock, stock options, and stock appreciation rights. Use the dollar amount recognized for financial statement reporting purposes with respect to the fiscal year in accordance with the Statement of Financial Accounting Standards No. 123 (Revised 2004) (FAS 123R), Shared Based Payments.

iii. Earnings for services under non-equity incentive plans. This does not include group life, health, hospitalization or medical reimbursement plans that do not discriminate in favor of executives, and are available generally to all salaried employees.

iv. Change in pension value. This is the change in present value of defined benefit and actuarial pension plans.

v. Above-market earnings on deferred compensation which is not tax-qualified.

vi. Other compensation, if the aggregate value of all such other compensation (e.g. severance, termination payments, value of life insurance paid on behalf of the employee, perquisites or property) for the executive exceeds $10,000.

TOTAL COMPENSATION CHART FOR MOST RECENTLY COMPLETED FISCAL YEAR

(Date of Fiscal Year Completion _____)

Rank (Highest to Lowest)	**Name (Last, First, MI)**	**Title**	**Total Compensation for Most Recently Completed Fiscal Year**
1			
2			
3			
4			
5			

THE UNDERSIGNED CERTIFIES THAT ON THE DATE WRITTEN BELOW, THE INFORMATION PROVIDED HEREIN IS ACCURATE.

SIGNATURE: _____

NAME AND TITLE: _____

DATE: _____

Attachment J

Mandatory Contract Provisions

Provisions:

Any contract or subcontract funded by this Agreement must contain the applicable provisions outlined in Appendix II to 2 C.F.R. Part 200. It is the responsibility of the sub-recipient to include the required provisions. The following is a list of sample provisions from Appendix II to 2 C.F.R. Part 200 that may be required:[1]

Appendix II to Part 200—Contract Provisions for Non-Federal Entity Contracts Under Federal Awards

In addition to other provisions required by the Federal agency or non-Federal entity, all contracts made by the non-Federal entity under the Federal award must contain provisions covering the following, as applicable.

(A) Contracts for more than the simplified acquisition threshold, which is the inflation adjusted amount determined by the Civilian Agency Acquisition Council and the Defense Acquisition Regulations Council (Councils) as authorized by 41 U.S.C. 1908, must address administrative, contractual, or legal remedies in instances where contractors violate or breach contract terms, and provide for such sanctions and penalties as appropriate.

(B) All contracts in excess of $10,000 must address termination for cause and for convenience by the non-Federal entity including the manner by which it will be affected and the basis for settlement.

(C) Equal Employment Opportunity. Except as otherwise provided under 41 C.F.R. Part 60, all contracts that meet the definition of "federally assisted construction contract" in 41 C.F.R. Part 60-1.3 must include the equal opportunity clause provided under 41 C.F.R. 60-1.4(b), in accordance with Executive Order 11246, "Equal Employment Opportunity" (30 FR 12319, 12935, 3 C.F.R. Part, 1964-1965 Comp., p. 339), as amended by Executive Order 11375, "Amending Executive Order 11246 Relating to Equal Employment Opportunity," and implementing regulations at 41 C.F.R. part 60, "Office of Federal Contract Compliance Programs, Equal Employment Opportunity, Department of Labor."

(D) Davis-Bacon Act, as amended (40 U.S.C. 3141-3148). When required by Federal program legislation, all prime construction contracts in excess of $2,000 awarded by non-Federal entities must include a provision for compliance with the Davis-Bacon Act (40 U.S.C. 3141-3144, and 3146-3148) as supplemented by Department of Labor regulations (29 C.F.R. Part 5, "Labor Standards Provisions Applicable to Contracts Covering Federally Financed and Assisted Construction"). In accordance with the statute, contractors must be required to pay wages to laborers and mechanics at a rate not less than the prevailing wages specified in a wage determination made by the Secretary of Labor. In addition, contractors must be required to pay wages not less than once a week. The non-Federal entity must place a copy of the current prevailing wage determination issued by the Department of Labor in each solicitation. The decision to award a contract or subcontract must be conditioned upon the acceptance of the wage determination. The non-Federal entity must report all suspected or reported violations to the Federal awarding agency. The contracts must also include a provision for compliance with the Copeland "Anti-Kickback" Act (40 U.S.C. 3145), as supplemented by Department of Labor regulations (29 C.F.R. Part 3, "Contractors and Subcontractors on Public Building or Public Work Financed in Whole or in Part by Loans or Grants from the United States"). The Act provides that each contractor or Sub-recipient must be prohibited from inducing, by any means, any person employed in the construction, completion, or

[1] For example, the Davis-Bacon Act is not applicable to other FEMA grant and cooperative agreement programs, including the Public Assistance Program or Hazard Mitigation Grant Program; however, sub-recipient may include the provision in its subcontracts.

repair of public work, to give up any part of the compensation to which he or she is otherwise entitled. The non-Federal entity must report all suspected or reported violations to the Federal awarding agency.

(E) Contract Work Hours and Safety Standards Act (40 U.S.C. 3701-3708). Where applicable, all contracts awarded by the non-Federal entity in excess of $100,000 that involve the employment of mechanics or laborers must include a provision for compliance with 40 U.S.C. 3702 and 3704, as supplemented by Department of Labor regulations (29 C.F.R. Part 5). Under 40 U.S.C. 3702 of the Act, each contractor must be required to compute the wages of every mechanic and laborer on the basis of a standard work week of 40 hours. Work in excess of the standard work week is permissible provided that the worker is compensated at a rate of not less than one and a half times the basic rate of pay for all hours worked in excess of 40 hours in the work week. The requirements of 40 U.S.C. 3704 are applicable to construction work and provide that no laborer or mechanic must be required to work in surroundings or under working conditions which are unsanitary, hazardous or dangerous. These requirements do not apply to the purchases of supplies or materials or articles ordinarily available on the open market, or contracts for transportation or transmission of intelligence.

(F) Rights to Inventions Made Under a Contract or Agreement. If the Federal award meets the definition of "funding agreement" under 37 C.F.R. § 401.2 (a) and the recipient or Sub-recipient wishes to enter into a contract with a small business firm or nonprofit organization regarding the substitution of parties, assignment or performance of experimental, developmental, or research work under that "funding agreement," the recipient or Sub-recipient must comply with the requirements of 37 C.F.R. Part 401, "Rights to Inventions Made by Nonprofit Organizations and Small Business Firms Under Government Grants, Contracts and Cooperative Agreements," and any implementing regulations issued by the awarding agency.

(G) Clean Air Act (42 U.S.C. 7401-7671q.) and the Federal Water Pollution Control Act (33 U.S.C. 1251-1387), as amended—Contracts and subgrants of amounts in excess of $150,000 must contain a provision that requires the non-Federal award to agree to comply with all applicable standards, orders or regulations issued pursuant to the Clean Air Act (42 U.S.C. 7401-7671q) and the Federal Water Pollution Control Act as amended (33 U.S.C. 1251-1387). Violations must be reported to the Federal awarding agency and the Regional Office of the Environmental Protection Agency (EPA).

(H) Debarment and Suspension (Executive Orders 12549 and 12689)—A contract award (see 2 C.F.R. 180.220) must not be made to parties listed on the governmentwide Excluded Parties List System in the System for Award Management (SAM), in accordance with the OMB guidelines at 2 C.F.R. 180 that implement Executive Orders 12549 (3 C.F.R. Part 1986 Comp., p. 189) and 12689 (3 C.F.R. Part 1989 Comp., p. 235), "Debarment and Suspension." The Excluded Parties List System in SAM contains the names of parties debarred, suspended, or otherwise excluded by agencies, as well as parties declared ineligible under statutory or regulatory authority other than Executive Order 12549.

(I) Byrd Anti-Lobbying Amendment (31 U.S.C. 1352)—Contractors that apply or bid for an award of $100,000 or more must file the required certification. Each tier certifies to the tier above that it will not and has not used Federal appropriated funds to pay any person or organization for influencing or attempting to influence an officer or employee of any agency, a member of Congress, officer or employee of Congress, or an employee of a member of Congress in connection with obtaining any Federal contract, grant or any other award covered by 31 U.S.C. 1352. Each tier must also disclose any lobbying with non-Federal funds that takes place in connection with obtaining any Federal award. Such disclosures are forwarded from tier to tier up to the non-Federal award.

(J) See 2 C.F.R, § 200.323 Procurement of recovered materials.

(K) See 2 C.F.R, §200.216 Prohibition on certain telecommunication and video surveillance services or equipment.

(L) See 2 C.F.R, §200.322 Domestic preferences for procurements

(Appendix II to Part 200, Revised Eff. 11/12/2020).

FEMA created the 2019 PDAT Contract Provisions Template to assist non-Federal entities. It is *available at* https://www.fema.gov/media-library-data/1569959119092-92358d63e00d17639d5db4de015184c9/PDAT_ContractProvisionsTemplate_9-30-19.pdf.

Please note that the sub-recipient alone is responsible for ensuring that all language included in its contracts meets the requirements of 2 C.F.R. § 200.327 and 2 C.F.R. Part 200, Appendix II.

Attachment K

Certification Regarding Lobbying

Check the appropriate box:

☐ This Certification Regarding Lobbying is required because the Contract, Grant, Loan, or Cooperative Agreement will exceed $100,000 pursuant to 2 C.F.R. Part 200, Appendix II(I); 31 U.S.C. § 1352; and 44 C.F.R. Part 18.

☐ This Certification is not required because the Contract, Grant, Loan, or Cooperative Agreement will be less than $100,000.

APPENDIX A, 44 C.F.R. PART 18 – CERTIFICATION REGARDING LOBBYING

Certification for Contracts, Grants, Loans, and Cooperative Agreements

The undersigned certifies, to the best of his or her knowledge and belief, that:

1. No Federal appropriated funds have been paid or will be paid, by or on behalf of the undersigned, to any person for influencing or attempting to influence an officer or employee of an agency, a Member of Congress, an officer or employee of Congress, or an employee of a Member of Congress in connection with the awarding of any Federal contract, the making of any Federal grant, the making of any Federal loan, the entering into of any cooperative agreement, and the extension, continuation, renewal, amendment, or modification of any Federal contract, grant, loan, or cooperative agreement.

2. If any funds other than Federal appropriated funds have been paid or will be paid to any person for influencing or attempting to influence an officer or employee of any agency, a Member of Congress, an officer or employee of Congress, or an employee of a Member of Congress in connection with this Federal contract, grant, loan, or cooperative agreement, the undersigned shall complete and submit Standard Form-LLL, "Disclosure Form to Report Lobbying," in accordance with its instructions.

3. The undersigned shall require that the language of this certification be included in the award documents for all subawards at all tiers (including subcontracts, subgrants, and contracts under grants, loans, and cooperative agreements) and that all subrecipients shall certify and disclose accordingly.

This certification is a material representation of fact upon which reliance was placed when this transaction was made or entered into. Submission of this certification is a prerequisite for making or entering into this transaction imposed by section 1352, title 31, U.S. Code. Any person who fails to file the required certification shall be subject to a civil penalty of not less than $10,000 and not more than $100,000 for each such failure.

The Sub-Recipient or subcontractor, _____, certifies or affirms the truthfulness and accuracy of each statement of its certification and disclosure, if any. In addition, the Contractor understands and agrees that the provisions of 31 U.S.C. Chap. 38, Administrative Remedies for False Claims and Statements, apply to this certification and disclosure, if any.

_____

Signature of Sub-Recipient/subcontractor's Authorized Official

_____

Name and Title of Sub-Recipient/subcontractor's Authorized Official

_____

Date

Attachment L

Florida Accountability Contract Tracking System (FACTS)
Requirements for Non-profit Organizations Under Section 216.1366, Florida Statutes
Instructions and Worksheet

CONTRACT DOCUMENTATION REQUIREMENTS

Section 216.1366, F.S., amended in 2023, establishes new documentation requirements for any contract for services executed, amended, or extended on or after July 1, 2023, with non-profit organizations as defined in s. 215.97 (2)(m). F.S. The contract must require the contractor to provide documentation that indicates the amount of state funds:

- Allocated to be used during the full term of the contract for remuneration to any member of the board of directors or an officer of the contractor.
- Allocated under each payment by the public agency to be used for remuneration of any member of the board of directors or an officer of the contractor. The documentation must indicate the amounts and recipients of the remuneration.

Such information must be included in the contract tracking system maintained pursuant to s. 215.985 F.S. and must be posted on the contractor's website if the contractor maintains a website.

- As used in this subsection, the term:

o "Officer" means a Chief Executive Officer (CEO), Chief Financial Officer (CFO), Chief Operating Officer (COO), or any other position performing an equivalent function.

o "Remuneration" means all compensation earned by or awarded to personnel, whether paid or accrued, regardless of contingency, including bonuses, accrued paid time off, severance payments, incentive payments, contributions to a retirement plan, or in-kind payments, reimbursements, or allowances for moving expenses, vehicles and other transportation, telephone services, medical services, housing, and meals.

o "State funds" means funds paid from the General Revenue Fund or any state trust fund, funds allocated by the Federal Government and distributed by the state, or funds appropriated by the state for distribution through any grant program. The term does not include funds used for the state Medicaid program.

Note: This "Instructions and Worksheet" is meant to explain the requirements of the Section 216.1366, F.S., amended in 2023, and give clarity to the attached form distributed to recipients and sub-recipients for completion. All pertinent information below should be filled out, signed, and returned to the project manager.

NON-PROFIT ORGANIZATION REMUNERATION INFORMATION

1. Is your business or organization a non-profit organization as defined in s. 215.97 (2)(m). F.S.?
Yes ☐ No ☐

If the answer to Question 1 is "Yes," continue to Question 2. If the answer to Question 1 is "No", move to the signature block below to complete the certification and submittal process.

2. Will state funds be used as remuneration to any member of the board of directors or an officer in your business or organization?
Yes ☐ No ☐

If the answer to Question 2 is "Yes," provide the information required in the "Total Compensation Paid to Non-Profit Personnel Using State Funds" form below. A separate form should be completed for each member of the board of directors or officer being compensated using state funds. If the answer to Question 2 is "No", move to the signature block below to complete the certification and submittal process.

Total Compensation Paid to Non-Profit Personnel Using State Funds

Name:		
Title:		
Agency Agreement/Contract #		
Total Contract Amount		
Contract Term:		
Line Item Budget Category	**Total Amount Paid**	**Amount Paid from State Funds**
Salaries		
Fringe Benefits		
Bonuses		
Accrued Paid Time Off		
Severance Payments		
Retirement Contributions		
In-Kind Payments		
Incentive Payments		
Reimbursements/Allowances		
Moving Expenses		
Transportation Costs		
Telephone Services		
Medical Services Costs		
Housing Costs		
Meals		

CERTIFICATION: I certify that the amounts listed above are true and accurate and in accordance with the approved budget.

Name:	
Signature:	
Title:	
Date:	

ATTACHMENT M

FOREIGN COUNTRY OF CONCERN AFFIDAVIT –
PERSONAL IDENTIFYING INFORMATION CONTRACT

Section 287.138, Florida Statutes, prohibits a Florida "Governmental entity"[2] from entering into or extending contracts with any other entity whereby such a contract, or extension thereof, could grant the other entity access to an individual's personal identifying information if that entity is associated with a "Foreign Country of Concern."[3] Specifically, section 287.138(2), Florida Statutes, prohibits such contracts with any entity that is owned by the government of a Foreign Country of Concern, any entity in which the government of a Foreign Country of Concern has a "controlling interest,"[4] and any entity organized under the laws of or which has its principal place of business in a Foreign Country of Concern.

As the person authorized to sign on behalf of Respondent, I hereby attest that the company identified above in the section entitled "Respondent Vendor Name" is not an entity owned by the government of a Foreign Country of Concern, no government of a Foreign Country of Concern has a controlling interest in the entity, and the entity has not been organized under the laws of or has its principal place of business in a Foreign Country of Concern.

I understand that pursuant to section 287.138, Florida Statutes, I am submitting this affidavit under penalty of perjury.

Respondent Vendor Name: _____

Vendor FEIN: _____

Vendor's Authorized Representative Name and Title: _____

Address: _____

City:_____State:_____Zip: _____

Phone Number: _____

Email Address:_____

Certified By: _____
AUTHORIZED SIGNATURE

Print Name and Title: _____

Date: _____

[2] As defined in Section 287.138 (1)(d), Florida Statutes.
[3] As defined in Section 287.138 (1)(c), Florida Statutes.
[4] As defined in Section 287.138 (1)(a), Florida Statutes.

LOCATION OF PROPERTIES TO BE ACQUIRED

Address 893 Sugar House Dr.
Parcel 633708020480
Size 0.23 AC

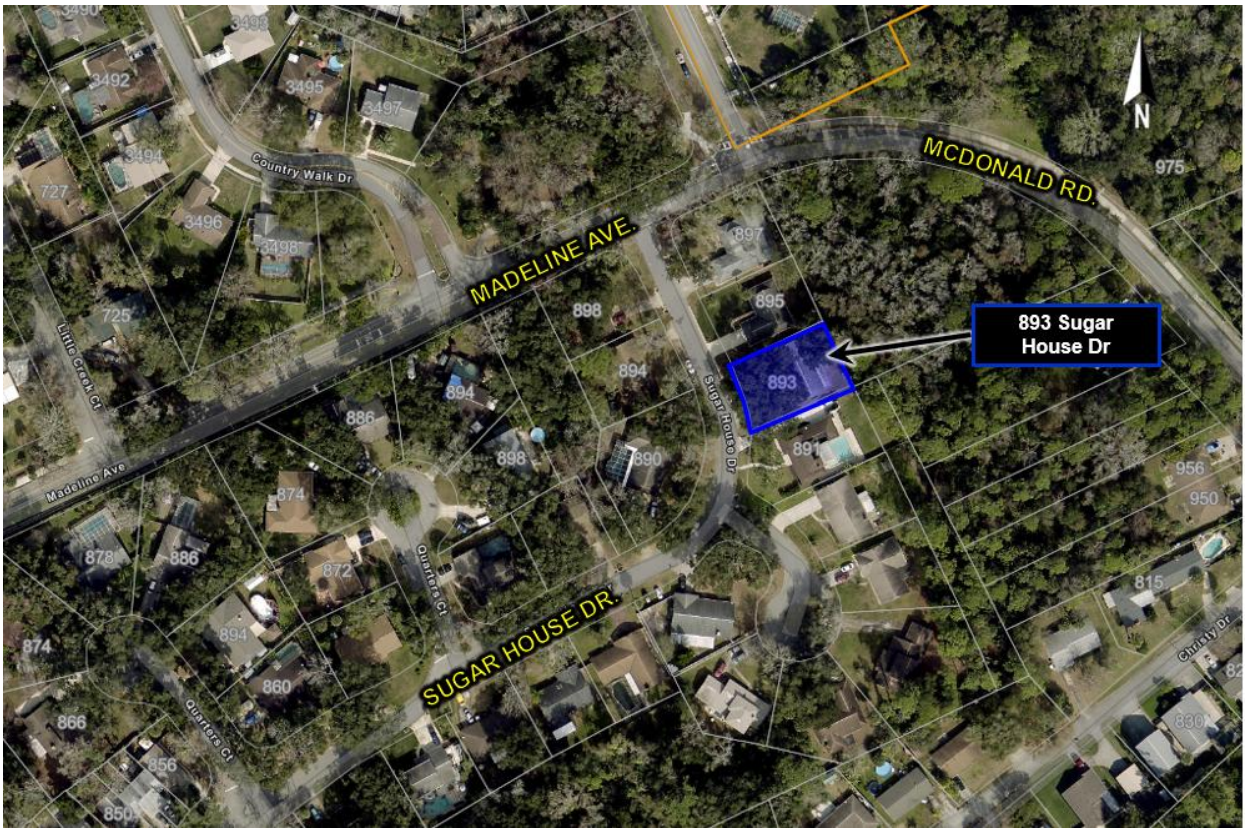

Address 798 Sugar House Dr.
Parcel 633708030760
Size 0.20 AC



LOCATION OF PROPERTIES TO BE ACQUIRED

Address	5899 Trailwood Dr.
Parcel	632202000080
Size	2.06 AC



CITY COUNCIL AGENDA ITEM

COUNCIL MEETING DATE 8/19/2025

SUBJECT: (E13) Presentation of Vulnerability Assessment

DEPARTMENT: Engineering

GOAL: 2 - Infrastructure

RECOMMENDED MOTION: Discussion only. No motion needed.

SUMMARY: City Engineering Staff and representatives from Kimley-Horn will deliver a brief presentation on the ongoing Comprehensive Vulnerability Assessment. This assessment is a critical component of the city's long-term resilience planning, aimed at identifying infrastructure vulnerabilities related to flooding, sea level rise, extreme weather events, and other environmental stressors. The presentation will provide an overview of the assessment's scope, methodology, preliminary findings, and how the results will inform future capital improvement planning and policy development. Completion of the Vulnerability Assessment is required to be eligible to receive Resilient Florida implementation grants, which provide funding to help local governments and other eligible entities implement projects that address flooding and sea level rise vulnerabilities.

PRESENTER: Junos Reed

ATTACHMENTS:

1.	PortOrange_VA PublicPresentation	PortOrange_VA PublicPresentation.pdf

Robin Fenwick	Created/Initiated - 07/25/2025
Junos Reed	Approved - 07/30/2025
Wayne Clark	Final Approval - 08/12/2025

City of Port Orange Vulnerability Assessment

Task 12: Public Presentation

August 19, 2025
Agreement No. 24PLN74

Kimley»Horn





Project Introduction

This project has been collaboratively funded by the City of Port Orange and the Florida Department of Environmental Protection's Resilient Florida Grant Program.

Project Objective

To conduct a Vulnerability Assessment compliant with s. 380.093, F.S. identifying risks associated with flooding events in the City of Port Orange.





What is a Vulnerability Assessment?

Definition: A Vulnerability Assessment is a study conducted at the City or County level to evaluate the impact of flooding on critical assets.

Purpose

- To identify risks associated with flooding and sea level rise
- To identify vulnerable property or infrastructure
- To prioritize high-risk areas
- To devise resilience-based strategies to target risks

What is Included?

- Inventory of City-Owned Critical Assets
  - Examples: Roadways, Utilities, City Buildings, Parks, and More.
- A Planning-level Flood Risk Analysis
  - Terrain-based floodplain modeling to generate rainfall, storm surge, sea level rise, and tidal impacts
- Public Outreach & Community Engagement
  - Local input used to guide planning and analysis decisions



Why is this Important?

- Vulnerability Assessments are required per F.S. 380.093
- City received FDEP grant funding to complete
- Results of the Assessment are used to apply for State funding through the Resilient Florida Grant Program
- Supports long-term planning efforts and emergency preparedness
- Builds a stronger, more resilient community

Project Schedule

Task #	Task Title	Date
1	Identify Vulnerability Assessment Data Standards	October 2024
2	Kickoff Meeting	November 2024
3	Assemble Steering Committee	December 2024
4	Conduct Steering Committee Meetings	July 2025
5	Public Outreach Meeting #1	January 2025
6	Acquire Background Data	December 2024
7	Exposure Analysis	January 2025
8	Sensitivity Analysis	March 2025
9	Public Outreach Meeting #2	June 2025
10	Identify Focus Areas	June 2025
11	Final Vulnerability Assessment Report, Maps, and Tables	July 2025
12	Public Presentation	August 2025
13	Local Mitigation Strategy	October 2025
14	Adaptation Plan	October 2025

Data Collection

Data Required:

- Topographic Data
- Flood Scenario Data
  - Rainfall
  - Sea Level Rise
  - Storm Surge
- Inventory of City-Owned Assets
  - Transportation Assets and Evacuation Routes
  - Critical Infrastructure
  - Critical Community and Emergency Facilities
  - Natural, Cultural, and Historical Resources

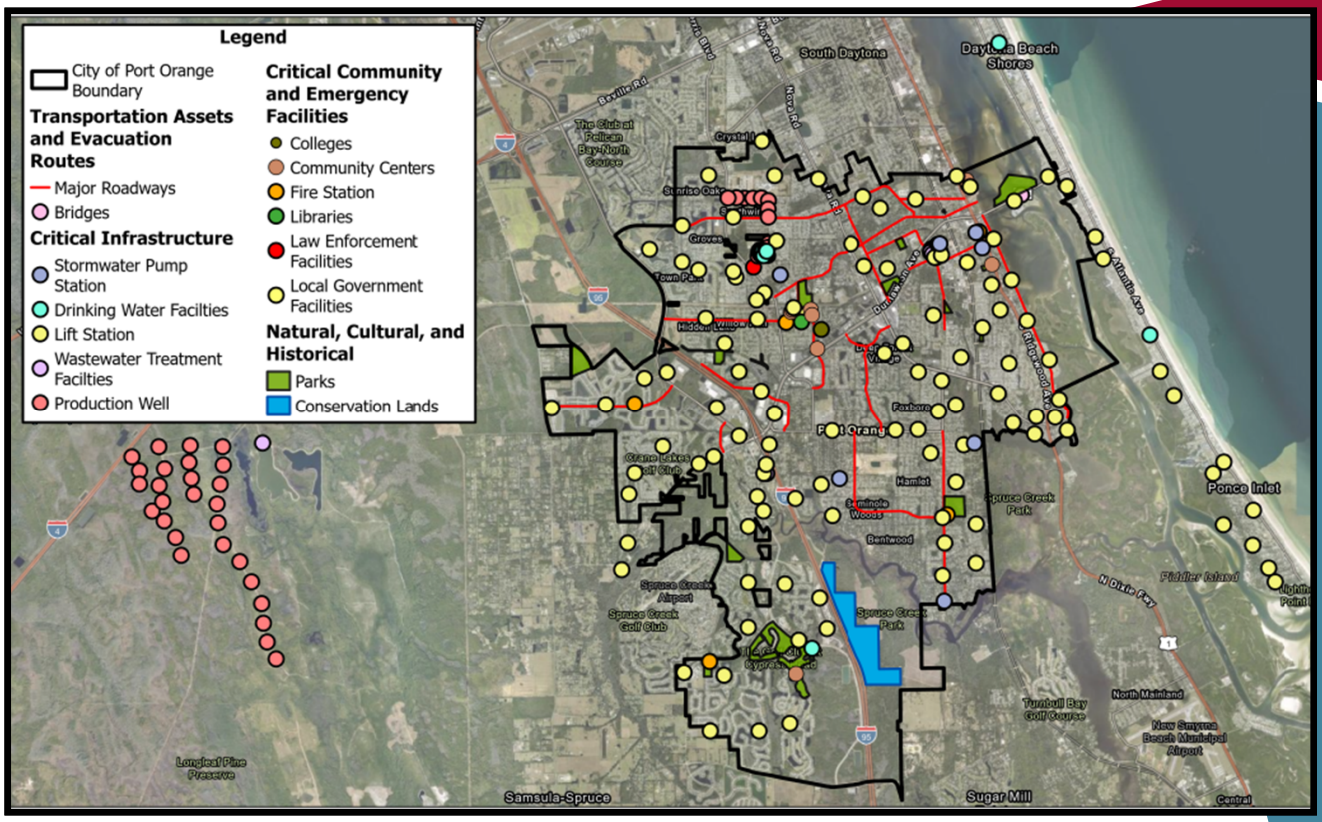

Flood Scenarios

Scenario Number	Scenario Name	Source
Rainfall		
1	100Y24H	NOAA Atlas 14
2	500Y24H	NOAA Atlas 14
3	Future 100Y24H (2050 Low)	NOAA Atlas 14 & FIU CF's
4	Future 100Y24H (2050 High)	NOAA Atlas 14 & FIU CF's
5	Future 100Y24H (2080 Low)	NOAA Atlas 14 & FIU CF's
6	Future 100Y24H (2080 High)	NOAA Atlas 14 & FIU CF's
7	Future 500Y24H (2050 Low)	NOAA Atlas 14 & FIU CF's
8	Future 500Y24H (2050 High)	NOAA Atlas 14 & FIU CF's
9	Future 500Y24H (2080 Low)	NOAA Atlas 14 & FIU CF's
10	Future 500Y24H (2080 High)	NOAA Atlas 14 & FIU CF's
Sea Level Rise		
11	2050 Intermediate-Low	NOAA 2022 SLR Projections
12	2050 Intermediate	NOAA 2022 SLR Projections
13	2080 Intermediate-Low	NOAA 2022 SLR Projections
14	2080 Intermediate	NOAA 2022 SLR Projections
High Tide		
15	High Tide Flooding	NOAA Tides and Currents
16	Compound High Tide/SLR (2050 Intermediate-Low)	NOAA Tides and Currents & NOAA 2022 SLR Projections
17	Compound High Tide/SLR (2050 Intermediate)	NOAA Tides and Currents & NOAA 2022 SLR Projections
18	Compound High Tide/SLR (2080 Intermediate-Low)	NOAA Tides and Currents & NOAA 2022 SLR Projections
19	Compound High Tide/SLR (2080 Intermediate)	NOAA Tides and Currents & NOAA 2022 SLR Projections
Storm Surge		
20	100-Year Storm Surge	FEMA FIS
21	Compound Storm Surge/100Y24H Rainfall	FEMA FIS & NOAA Atlas 14
22	Compound Storm Surge/SLR (2050 Intermediate-Low)	FEMA & NOAA 2022
23	Compound Storm Surge/SLR (2050 Intermediate)	FEMA & NOAA 2022
24	Compound Storm Surge/SLR (2080 Intermediate-Low)	FEMA & NOAA 2022
25	Compound Storm Surge/SLR (2080 Intermediate)	FEMA & NOAA 2022

Exposure Analysis

Objective:

To identify water depth for flood scenarios including:

- Rainfall-Induced Flooding
- Sea-Level Rise
- High Tides
- Storm Surge
- Compound Flooding

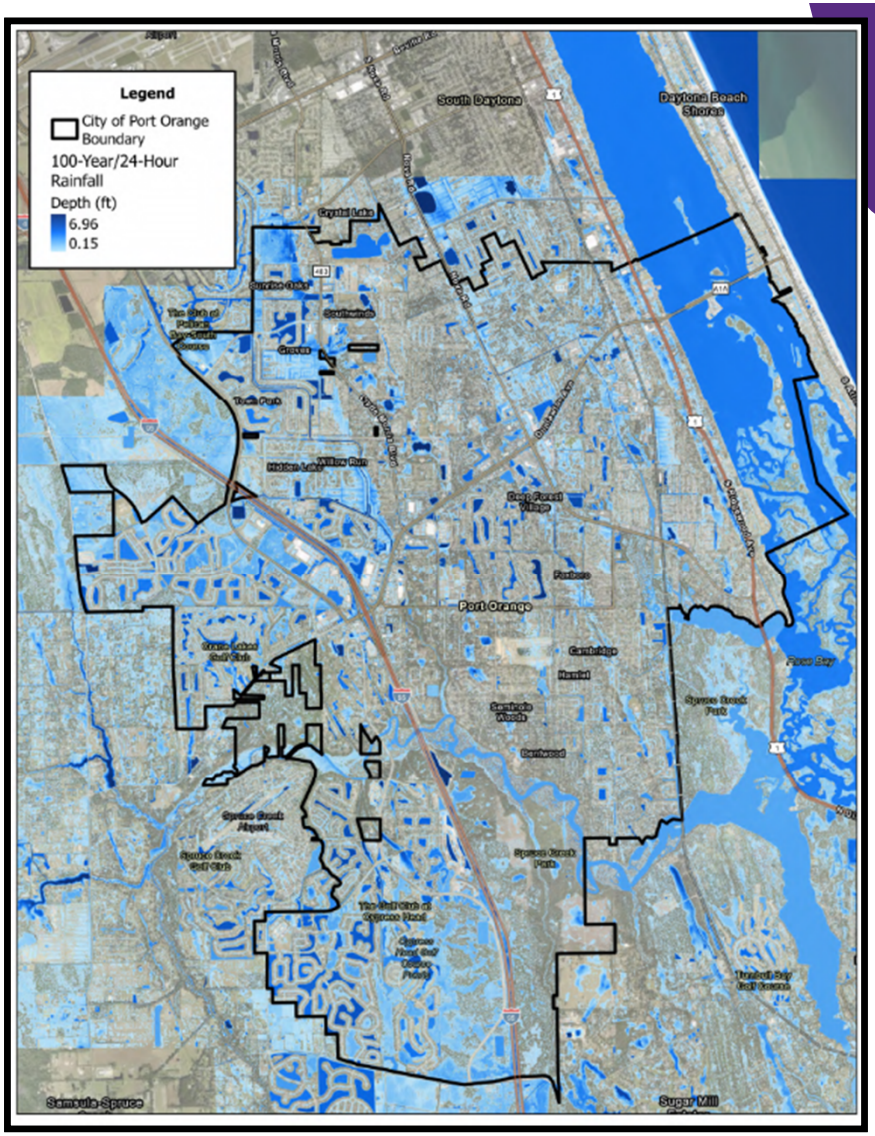

100-Year Rainfall

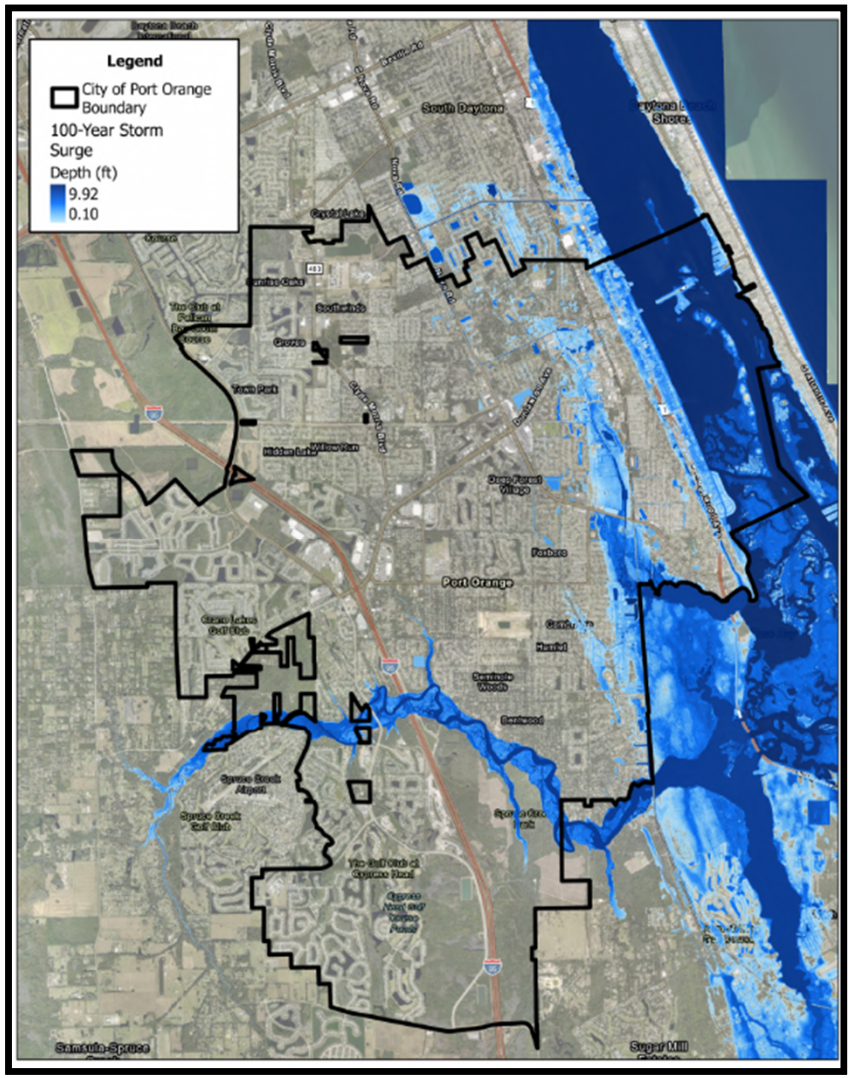

100-Year Storm Surge

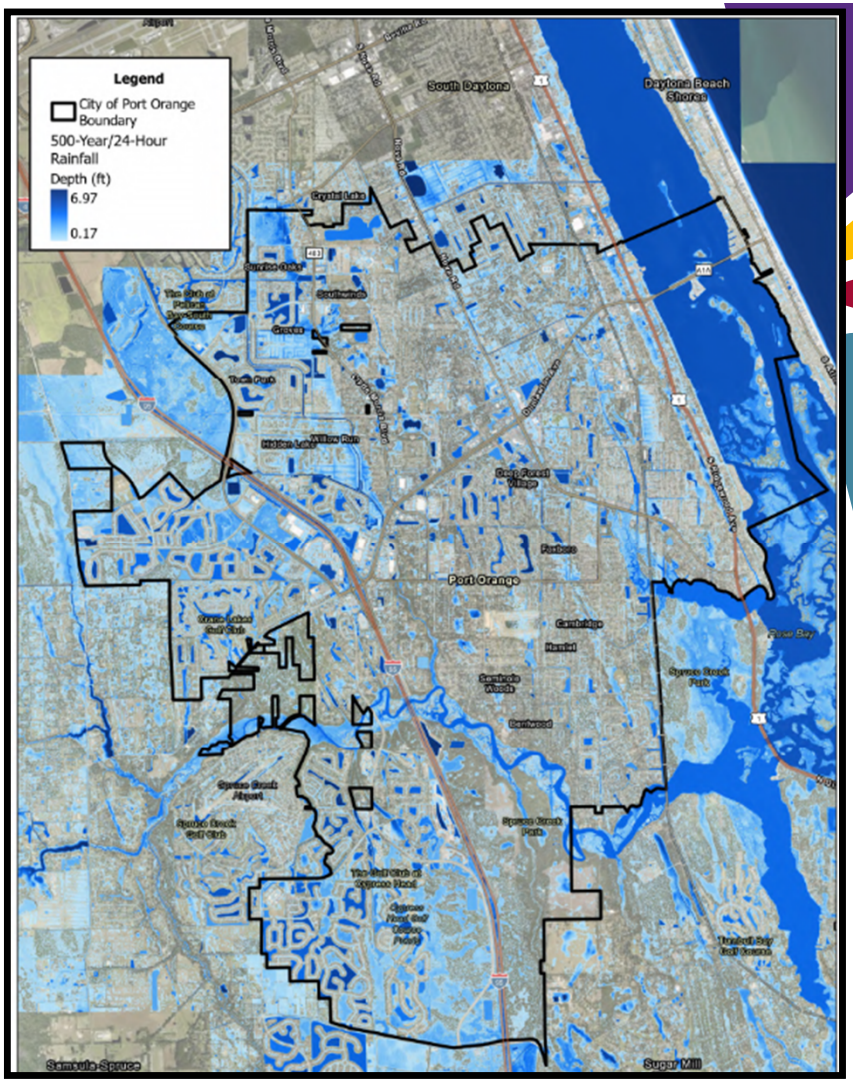

500-Year Rainfall

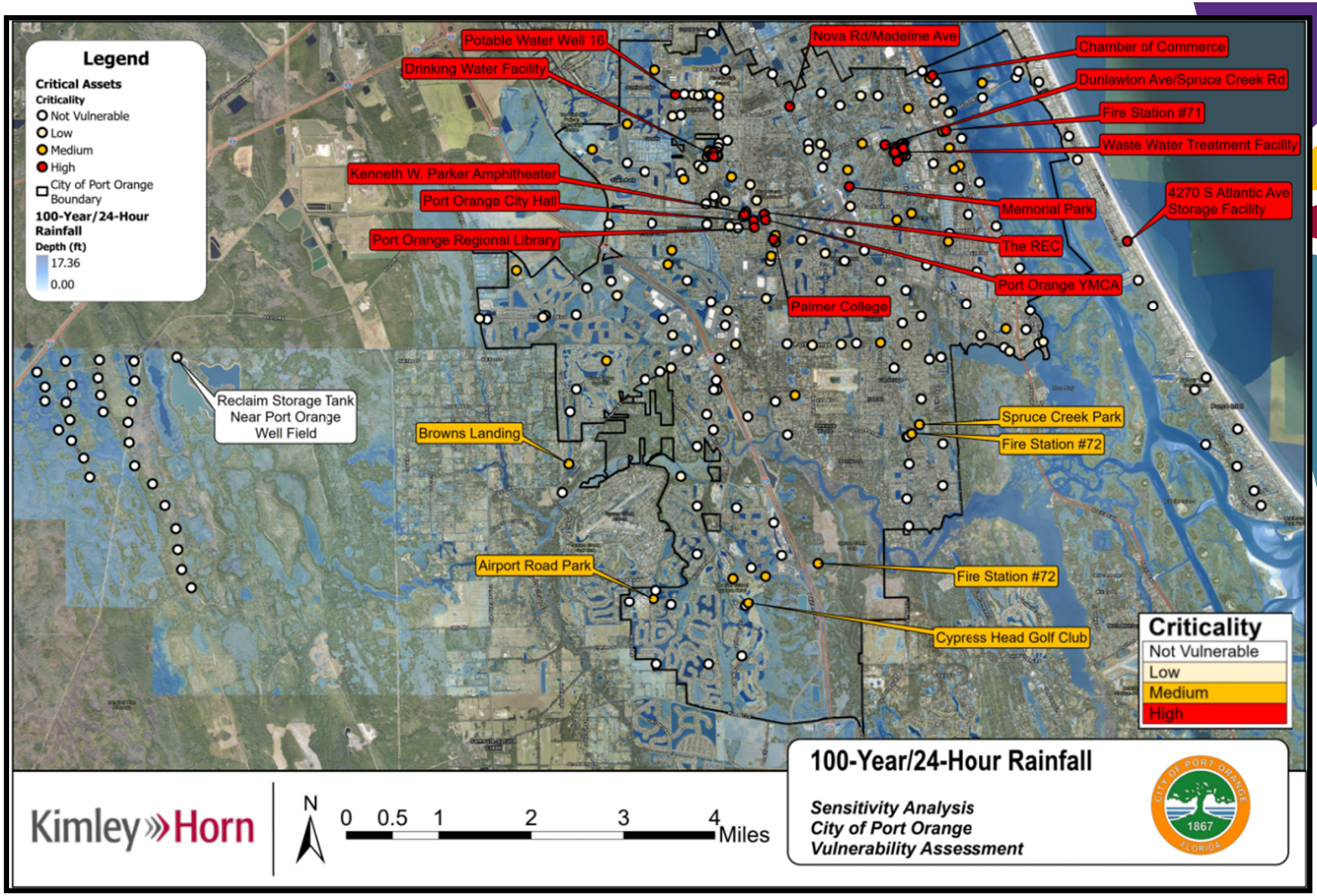
Legend
Critical Assets
Criticality
Not Vulnerable
Low
Medium
High
City of Port Orange Boundary
100-Year/24-Hour Rainfall
Depth (ft)
17.36
0.00
Potable Water Well 16
Drinking Water Facility
Nova Rd/Madeline Ave
Chamber of Commerce
Dunlawton Ave/Spruce Creek Rd
Fire Station #71
Waste Water Treatment Facility
4270 S Atlantic Ave Storage Facility
Kenneth W. Parker Amphitheater
Port Orange City Hall
Port Orange Regional Library
Memorial Park
The REC
Port Orange YMCA
Palmer College
Reclaim Storage Tank Near Port Orange Well Field
Browns Landing
Spruce Creek Park
Fire Station #72
Airport Road Park
Fire Station #72
Cypress Head Golf Club
Criticality
Not Vulnerable
Low
Medium
High
Kimley»Horn
N
0 0.5 1 2 3 4 Miles
100-Year/24-Hour Rainfall
Sensitivity Analysis
City of Port Orange
Vulnerability Assessment
CITY OF PORT ORANGE 1867 FLORIDA

Identify Focus Areas

Objective:

Identify highly vulnerable focus areas within the City which can benefit from future adaptation strategies.

Methodology:

- Exposure/Sensitivity Analysis Results
- City and Resident Input

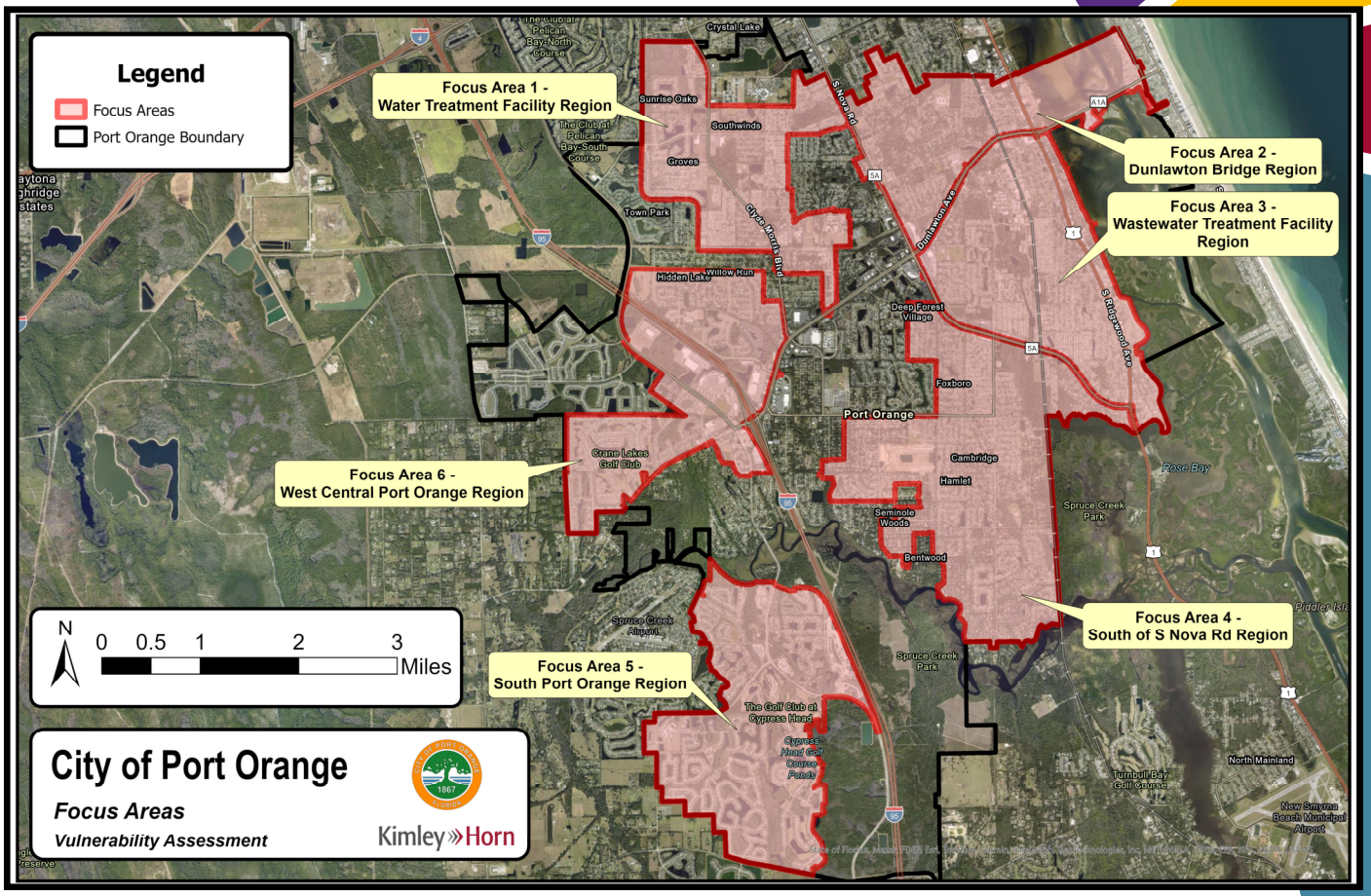

Adaptation Plan

Objective:

To devise adaptation interventions and/or strategies to increase resiliency.

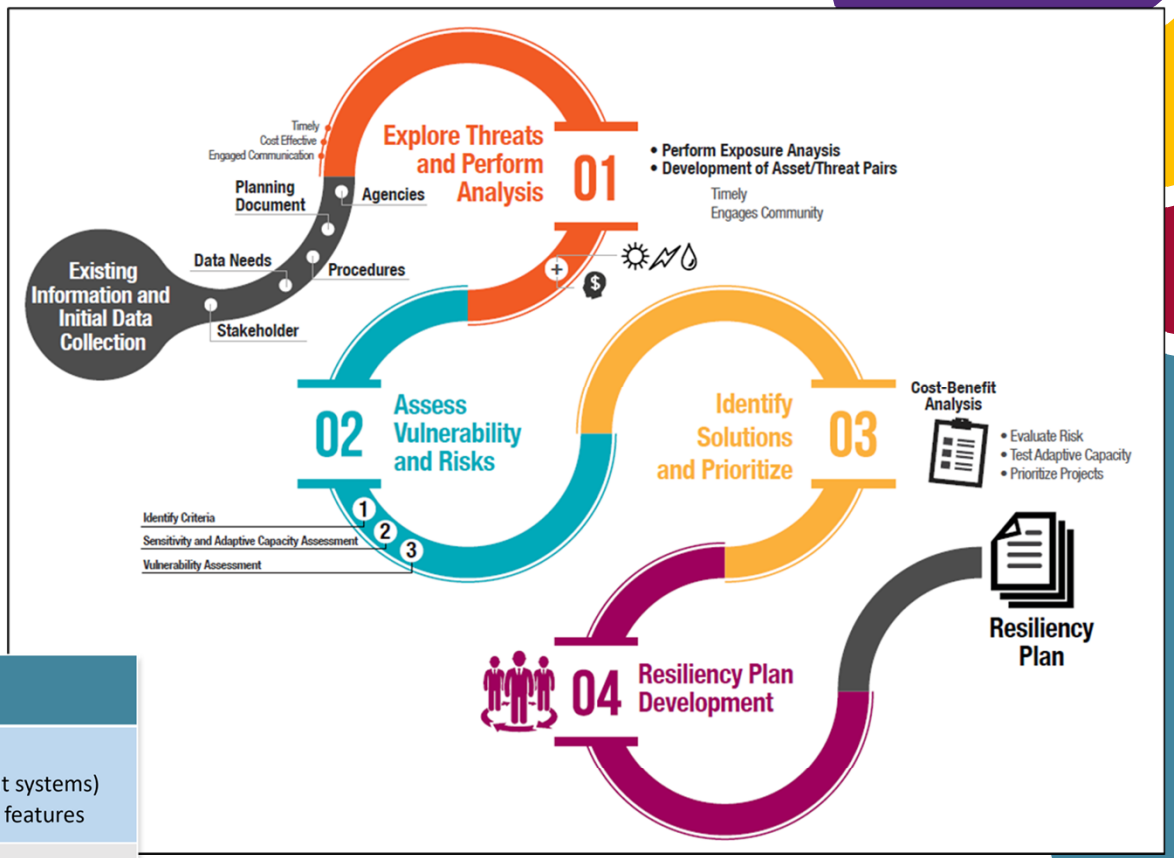

Intervention	Example
Blue, Gray and Green Infrastructure	**Blue** • Regional stormwater facilities (credit systems) • Integrated passive parks with water features
	Gray • Hardening or raising of infrastructure • Adding storage/capacity • Diverting flows
	Green • Living shorelines • Bioswales, upflow filters, filter marshes • Landscaping – green roofs, canopy coverage

Next Steps

- Finalize the Vulnerability Assessment
  - Submit Final Vulnerability Assessment Report, Maps, and Tables
- Complete the Adaptation Plan
- Participate in County LMS Meetings
- Submit for FDEP Resilient Florida Grant Funding
- Begin implementation of resilience projects

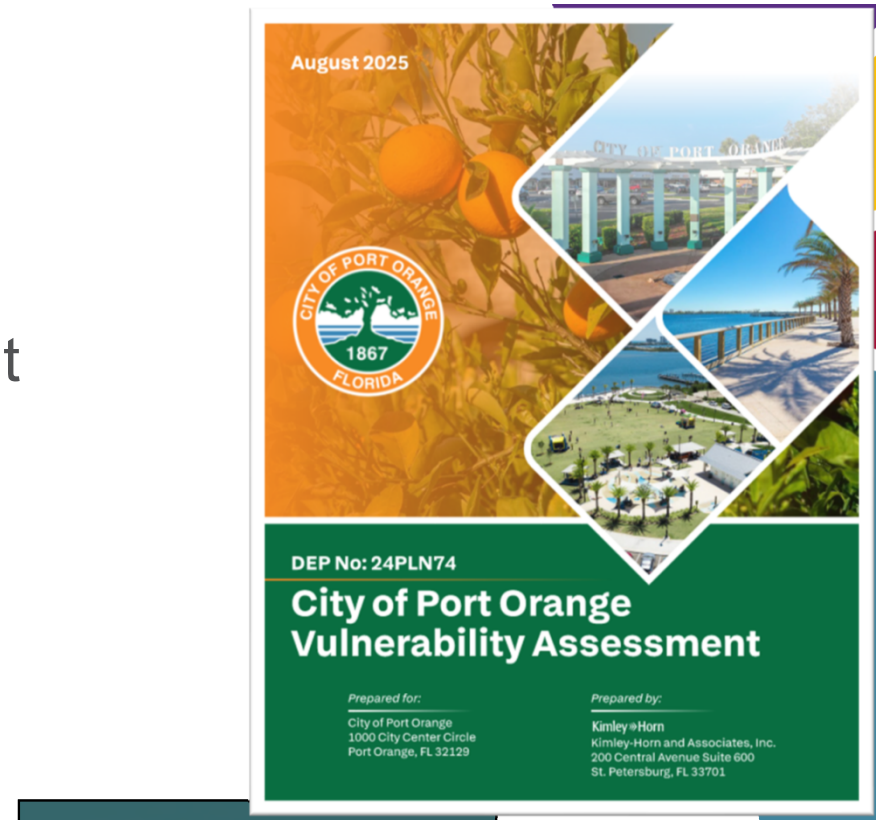

VOLUSIA COUNTY, FLORIDA

Volusia County
FLORIDA

MULTI-JURISDICTIONAL
LOCAL MITIGATION STRATEGY

Thank you!





CITY COUNCIL AGENDA ITEM

COUNCIL MEETING DATE 8/19/2025

SUBJECT: (G15) First Reading - Ordinance No. 2025-20 - Administrative Rezoning/Various Locations East of Nova Road

DEPARTMENT: Community Development

GOAL: 3 - Quality of Life

RECOMMENDED MOTION: Move to approve Ordinance No. 2025-20.

SUMMARY: Planning Commission Action: (7/31/25): Recommended Approval (Vote 6-0)

The proposed administrative rezoning (Case No. REZONING-25-0004) involves 12 properties generally located on the east side of the City of Port Orange, east of Nova Road. The rezoning is to address zoning inconsistencies with the current Future Land Use designation for the properties. Of the twelve properties, six are privately owned, while the remaining six are owned by the City of Port Orange. The owners of the privately-owned properties all submitted signed consent forms to the City in support of the proposed zoning changes. Staff have prepared the administrative rezoning to bring the properties into compliance with the City's Future Land Use Map and ensure consistency with the surrounding area, as well as the historic and/or intended use of the properties.

The proposed administrative rezoning changes for the 12 properties are detailed below and are listed and shown on Exhibits 2 and 3 of the attached staff report.
1. Rezone 3 privately owned properties (±0.46 acres total) from Community Commercial (CC) to Neighborhood Preservation (NP)
2. Rezone 1 privately owned property (±0.18 acres total) from Ridgewood Development (RD) to Neighborhood Preservation (NP)
3. Rezone 2 privately owned properties (±0.77 acres total) from Neighborhood Preservation (NP) to Office/Residential Transition (ORT)
4. Rezone 1 city-owned property (±0.24 acres total) from Neighborhood Preservation (NP) to Government Public Use (GPU)
5. Rezone 2 city-owned properties (±1.07 acres total) from Planned Commercial Development (PCD) to Government Public Use (GPU)
6. Rezone 2 city-owned properties (±1.66 acres total) from Multi-Family Residential (R-3M) to Government Public Use (GPU)
7. Rezone 1 city-owned property (±0.31 acres total) from Single-Family Residential (R-10SF) to Government Public Use (GPU)

The properties proposed to be rezoned to the NP (Neighborhood Preservation) zoning district have historically been developed with a single-family home. The properties proposed to be rezoned to the ORT (Office/Residential Transition) zoning district will establish consistency between the properties' current Future Land Use (FLU) designation and zoning. Lastly, the properties proposed to be rezoned to the GPU (Government/Public Use) zoning district are owned by the City and are either currently developed or planned to be developed for public purposes. At this time, none of the 12 properties associated with this administrative rezoning are included in the Volusia County Transform 386 program or the FEMA Hazard Mitigation Grant Program (HMGP).

The Staff Report is attached for more information.

PRESENTER: Penelope Cruz, Tim Burman

ATTACHMENTS:

1.	Ordinance No. 2025-20 with exhibits	Ordinance No. 2025-20 with exhibits.pdf
2.	STAFF REPORT	STAFF REPORT.pdf
3.	Business Impact Estimate - ORD 2025-19 - Admin Rezoning Various Locations Easst of Nova Rd	Business Impact Estimate - ORD 2025-19 - Admin Rezoning Various Locations Easst of Nova Rd.docx

Penelope Cruz	Created/Initiated - 08/01/2025
Tim Burman	Approved - 08/01/2025
Shannon Balmer	Approved - 08/12/2025
Wayne Clark	Final Approval - 08/12/2025

ORDINANCE NO. 2025-20

AN ORDINANCE OF THE CITY OF PORT ORANGE, VOLUSIA COUNTY, FLORIDA, REZONING ±0.46 ACRES FROM COMMUNITY COMMERCIAL (CC) TO NEIGHBORHOOD PRESERVATION (NP) LOCATED AT 412 JEFFERSON AVENUE, 414 JEFFERSON AVENUE, AND 416 JEFFERSON AVENUE; REZONING ±0.18 ACRES FROM RIDGEWOOD DEVELOPMENT (RD) TO NEIGHBORHOOD PRESERVATION (NP) LOCATED AT 117 FLEMING AVENUE; REZONING ±0.77 ACRES OF FROM NEIGHBORHOOD PRESERVATION (NP) TO OFFICE/RESIDENTIAL TRANSITION (ORT) LOCATED AT 608 ROSELLE STREET AND PARCEL NO. 6304-07-00-0760, GENERALLY LOCATED ON DUNLAWTON AVENUE; REZONING ±0.24 ACRES FROM NEIGHBORHOOD PRESERVATION (NP) TO GOVERNMENT PUBLIC USE (GPU) LOCATED AT 413 HERBERT STREET; REZONING ±1.07 ACRES FROM PLANNED COMMERCIAL DEVELOPMENT (PCD) TO GOVERNMENT PUBLIC USE (GPU) BEING IDENTIFIED AS PARCEL NOS. 6304-07-00-1820 AND 6304-07-00-1401, GENERALLY LOCATED AT SPRUCE CREEK ROAD & DUNLAWTON AVENUE; REZONING ±1.66 ACRES FROM MULTI-FAMILY RESIDENTIAL (R-3M) TO GOVERNMENT PUBLIC USE (GPU) BEING IDENTIFIED AS PARCEL NOS. 6341-05-00-0010 AND 6341-04-03-0142, GENERALLY LOCATED ON RUTH STREET; REZONING ±0.31 ACRES FROM SINGLE-FAMILY RESIDENTIAL (R-10SF) TO GOVERNMENT PUBLIC USE (GPU) LOCATED AT 5797 DEVON STREET; AUTHORIZING REVISION OF THE OFFICIAL ZONING ATLAS; AND PROVIDING AN EFFECTIVE DATE.

WHEREAS, the property to be rezoned from Community Commercial (CC) to Neighborhood Preservation (NP) consisting of ±0.46 acres located at 412 Jefferson Avenue, 414 Jefferson Avenue, and 416 Jefferson Avenue; and

WHEREAS, the property to be rezoned from Ridgewood Development (RD) to Neighborhood Preservation (NP) consisting of ±0.18 acres of property located at 117 Fleming Avenue; and

WHEREAS, the property to be rezoned from Neighborhood Preservation (NP) to Office/Residential Transition (ORT) consisting of ±0.77 acres total located at 608 Roselle Street and Parcel No. 6304-07-00-0760, generally located on Dunlawton Avenue; and

WHEREAS, the property to be rezoned from Neighborhood Preservation (NP) to Government Public Use (GPU) consisting of ±0.24 acres located at 413 Herbert Street; and

WHEREAS, the property to be rezoned from Planned Commercial Development (PCD) to Government Public Use (GPU) consisting of ±1.07 acres being identified as Parcel Nos. 6304-07-00-1820 and 6304-07-00-1401, generally located at Spruce Creek Road and Dunlawton Avenue; and

WHEREAS, the property to be rezoned from Multi-Family Residential (R-3M) to Government Public Use (GPU) consisting of ±1.66 acres being identified as Parcel Nos. 6341-05-00-0010 and 6341-04-03-0142, generally located on Ruth Street; and

WHEREAS, the property to be rezoned from Single-Family Residential (R-10SF) to Government Public Use (GPU) consisting of ±0.31 acres located at 5797 Devon Street; and

WHEREAS, a public hearing was held following public notice as prescribed by ordinance; and

WHEREAS, the Planning Commission has by a majority vote recommended approval of the proposed rezonings; and

WHEREAS, the City Council has approved by a majority vote of the members present the rezoning of the described property; and

NOW, THEREFORE, BE IT ORDAINED BY THE CITY COUNCIL OF THE CITY OF PORT ORANGE, VOLUSIA COUNTY, FLORIDA:

Section 1. The City Council of the City of Port Orange does hereby rezone the following described property located at 412 Jefferson Avenue, 414 Jefferson Avenue, and 416 Jefferson Avenue from Community Commercial (CC) to Neighborhood Preservation (NP).

Section 2. The City Council of the City of Port Orange does hereby rezone the following described property located at 117 Fleming Avenue from Ridgewood Development (RD) to Neighborhood Preservation (NP).

Section 3. The City Council of the City of Port Orange does hereby rezone the following described property located at 608 Roselle Street and Parcel No. 6304-07-00-0760, generally located on Dunlawton Avenue from Neighborhood Preservation (NP) to Office/Residential Transition (ORT).

Section 4. The City Council of the City of Port Orange does hereby rezone the following described property located at 413 Herbert Street from Neighborhood Preservation (NP) to Government Public Use (GPU).

Section 5. The City Council of the City of Port Orange does hereby rezone the following described property being identified as Parcel Nos. 6304-07-00-1820 and 6304-07-00-1401, generally located at Spruce Creek Road and Dunlawton Avenue from Planned Commercial Development (PCD) to Government Public Use (GPU).

Section 6. The City Council of the City of Port Orange does hereby rezone the following described property being identified as Parcel Nos. 6341-05-00-0010 and 6341-04-03-0142, generally located on Ruth Street from Multi-Family Residential (R-3M) to

Government Public Use (GPU).

Section 7. The City Council of the City of Port Orange does hereby rezone the following described property being located at 5797 Devon Street from Single-Family Residential (R-10SF) to Government Public Use (GPU).

Section 8. The property rezoned consisting of ±0.46 acres located at 412 Jefferson Avenue, 414 Jefferson Avenue, and 416 Jefferson Avenue is more particularly described on **Exhibit "1"** attached hereto.

Section 9. The property rezoned consisting of ±0.18 acres located at 117 Fleming Avenue is more particularly described on **Exhibit "1"** attached hereto.

Section 10. The property rezoned consisting of ±0.77 acres located at 608 Roselle Street and Parcel No. 6304-07-00-0760, generally located on Dunlawton Avenue, is more particularly described on **Exhibit "1"** attached hereto.

Section 11. The property rezoned consisting of ±0.24 acres located at 413 Herbert Street is more particularly described on **Exhibit "1"** attached hereto.

Section 12. The property rezoned consisting of ±1.07 acres being identified as Parcel Nos. 6304-07-00-1820 and 6304-07-00-1401, generally located at Spruce Creek Road and Dunlawton Avenue, is more particularly described on **Exhibit "1"** attached hereto.

Section 13. The property rezoned consisting of ±1.66 acres being identified as Parcel Nos. 6341-05-00-0010 and 6341-04-03-0142, generally located on Ruth Street, is more particularly described on **Exhibit "1"** attached hereto.

Section 14. The property rezoned consisting of ±0.31 acres located at 5797 Devon Street is more particularly described on **Exhibit "1"** attached hereto.

Section 15. The City Council of the City of Port Orange does hereby approve, authorize and direct the revision of the City's Official Zoning Atlas to show the classification for the areas as hereby rezoned as shown on **Exhibit "2"**, attached hereto.

Section 16. This ordinance shall become effective immediately upon adoption.

_____
MAYOR SCOTT STILTNER

ATTEST:

_____
Robin L. Fenwick, MMC, City Clerk

Passed on first reading on the day of

Passed and adopted on second and final reading on the day of

Reviewed and Approved: _____
Shannon K. Balmer, Senior Assistant City Attorney

Exhibit "1"

Address	Owner	Legal Description
412 Jefferson Avenue	Brenda McMillian	W 100 FT OF LOT 1 & S 20 FT OF LOT 2 BLK J VIRGINIA HEIGHTS PORT ORANGE PER OR 4334 PGS 525-526 PER OR 8397 PG 0058 PER OR 8406 PG 3122
414 Jefferson Avenue	Natalie Cappiello & John Labosco	N 30 FT OF LOT 2 & S 35 FT OF LOT 3 BLK J VIRGINIA HEIGHTS PORT ORANGE MB 9 PG 92 PER OR 5288 PG 4853 PER OR 5595 PG 4399
416 Jefferson Avenue	Anthony McDermott	N 15 FT OF LOT 3 & LOT 4 BLK J VIRGINIA HEIGHTS PORT ORANGE MB 9 PG 92 PER OR 4725 PG 4641 PER OR 6843 PG 0499 PER OR 7027 PG 0259
117 Fleming Avenue	Thomas Appelfeller & Lorna Linke	E 80 FT LOT 13 BLK 2 FLEMING PORT ORANGE MB 1 PG 100 PER OR 5027 PG 2781 PER OR 5564 PG 3556 PER OR 7711 PG 1497 PER OR 8626 PG 0843
608 Roselle Street	Roselle Capital Holding LLC	LOTS 86 THRU 88 EXC ST & LOTS 89 THRU 91 & LOTS 74 & 75 POWERS SUB PORT ORANGE PER OR 1771 PG 1295 PER OR 8556 PG 4993 PER OR 8570 PG 0164
Parcel ID: 630407000760	Eric V. Gill	LOTS 76 77 & 78 POWERS SUB PORT ORANGE EXC ST MB 10 PG 138 PER OR 2903 PG 0407
413 Herbert Street	City of Port Orange	LOT C SUB LOTS 1 & 2 BLK L WILSONS PORT ORANGE PER OR 3179 PG 485 PER OR 5596 PG 3853 PER OR 8726 PG 4608
Parcel ID: 630407001820	City of Port Orange	DRAINAGE RETENTION AREA LOTS 182 TO 187 INC EXC R/W POWERS ALLOTMENT PORT ORANGE MB 10 PG 138 PER OR 5236 PG 1068
Parcel ID: 630407001401	City of Port Orange	04 16 33 IRREG PARCEL BEING IN LOTS 188 TO 193 INC LYING S OF SR 415 & W OF ROSELLE ST & E OF SRRUCE CREEK RD & INC VAC DORA STREET ADJ EXC N 20 FT OF W 125.21 FT POWERS SUB OF PORT ORANGE PER 2551 PG 0525 PER OR 6489 PG 3802
Parcel ID: 634105000010	City of Port Orange	LOTS 1TO 16 INC & PARCEL A RUTH WOODS MB 36 PG 139 PER OR 4272 PG 0835
Parcel ID: 634104030142	City of Port Orange	TRI PARCEL IN LOT 3D BUNCH GRANT MB 3 PG 128 E OF W/L OF LOCUST ST & W OF RUTH WOODS MB 36 PG 139 BEING 99 FT ON W/L & 123.62 FT ON E/L PER OR 3206 PG 1723
5797 Devon Street	City of Port Orange	LOT 1 FOXBORO SUB MB 34 PG 117 PER OR 2977 PG 1804 PER OR 8482 PG 3368

EXHIBIT "2"

ZONING MAP

N
W E
S

Parcel ID: 630407000760
413 HERBERT ST
608 ROSELLE ST
Parcel ID: 630407001401
416 JEFFERSON AVE
414 JEFFERSON AVE
Parcel ID: 630407001820
412 JEFFERSON AVE
Parcel ID: 634104030142
117 FLEMING AVE
Parcel ID: 634105000010
DUNLAWTON AVE
RIDGEWOOD AVE
FEC RAILROAD
SPRUCE CREEK RD
NOVA RD
5797 DEVON ST
TAYLOR RD

Subject Property

Zoning

- Agriculture
- Commercial/Industrial
- Community Commercial
- Flood Plain-Conservation
- Government/Public Use
- Light Industrial
- Neighborhood Commercial
- Neighborhood Preservation
- Office Residential Transition
- Planned Commercial Development
- Planned Community-PO Riverwalk
- Planned Unit Development
- Professional Office
- R-10SF Single Family Residential
- R-2D Two Family Residential
- R-3L Multi-Family Residential
- R-3M Multi-Family Residential
- R-7SF Single Family Residential
- R-8SF Single Family Residential
- Residential Mobile Home
- Ridgewood Development
- Rural Residential
- Water Feature
- Parcel Boundaries
- City Boundary
- Major Roads

0 500 1,000 2,000 3,000 Feet

1 inch = 1000 feet

7/22/2025

STAFF REPORT
ADMINISTRATIVE REZONING
CASE NO. REZONING-25-0004

REQUEST:	An administrative rezoning for 12 properties located on the east side of the City of Port Orange to resolve zoning inconsistencies an bring the properties into compliance with the City's Comprehensive Plan.
LOCATIONS:	Various Location (see Exhibit 1 and 2)
OWNERS:	See Exhibit 1
APPLICANT:	City of Port Orange
STAFF CONTACT:	Penelope Cruz, Planning Manager (386) 506-5671
STAFF RECOMMENDATION:	Approval
PLANNING COMMISSION:	Recommended Approval 6-0 (July 31, 2025)
CITY COUNCIL:	August 19, 2025

PROPERTY OVERVIEW

The proposed administrative rezoning is to change the zoning of 12 properties generally located on the east side of the City of Port Orange, east of Nova Road, as follows:

1. ±0.46 acres of privately owned properties from Community Commercial (CC) and ±0.18 acres from Ridgewood Development (RD) to Neighborhood Preservation (NP) to allow for the existing single-family home on each property to be a conforming use.
2. ±0.77 acres of privately owned properties from Neighborhood Preservation (NP) to Office/Residential Transition (ORT)
3. ±0.24 acres of city-owned properties from Neighborhood Preservation (NP) to Government Public Use (GPU)
4. ±1.07 acres of city-owned properties from Planned Commercial Development (PCD) to Government Public Use (GPU)
5. ±1.66 acres of city-owned properties from Multi-Family Residential (R-3M) to Government Public Use (GPU)
6. ±0.31 acres of city-owned properties from Single-Family Residential (R-10SF) to Government Public Use (GPU)

DISCUSSION

The four properties proposed to be rezoned to Neighborhood Preservation (NP) have each been historically occupied by a single-family residence. Although currently designated as commercial on the City's Zoning Map, they have been developed and continuously used for residential purposes since the 1950s. The current Future Land Use designation for these properties is a Residential designation. Given the established residential character of the area, the long-term presence of single-family homes on adjacent parcels, and the consistent residential use of the subject properties, staff recommends rezoning these properties to a residential district to ensure alignment with surrounding land uses, zoning patterns, and existing development. The rezoning of these

properties *from Commercial (CC) to Neighborhood Preservation (NP)* was forecasted in the prior administrative rezoning for 422 Jefferson Avenue that was approved in May/June 2025. The Neighborhood Preservation (NP) zoning district is intended to maintain the character, housing mix, and density of established older mixed-use neighborhoods by allowing for compatible infill development and the redevelopment of single-family detached homes.

Address	Current Future Land Use	Current Use	Current Zoning	Proposed Zoning
412 Jefferson Avenue 414 Jefferson Avenue 416 Jefferson Avenue	*Suburban Residential* (2-4 units/acre)	Single-Family House	Community Commercial (CC)	Neighborhood Preservation (NP)
117 Fleming Avenue	*Urban Medium Density Residential (4-8 units/acre)*	Single-Family House	Ridgewood Development (RD)	Neighborhood Preservation (NP)

The two subject properties proposed to be rezoned to Office/Residential Transition (ORT) are currently vacant and have been designated Office/Residential Transition on the City's Future Land Use (FLU) map since 1985. However, these properties are currently zoned Neighborhood Preservation (NP) on the City's Zoning Map, which is inconsistent with their FLU designation and location along Dunlawton Avenue. The NP zoning district only permits the development of single-family detached homes, making it incompatible with the intended land use and development potential along this segment of the Dunlawton Avenue corridor.

The ORT Zoning District is a flexible, mixed-use classification that allows the development of commercial, office, and residential uses as part of a mixed-use development. Given the properties' location along Dunlawton Avenue, the proposed ORT zoning is more appropriate, aligns with the existing FLU designation, and better supports land use pattern along Dunlawton Avenue.

Address	Current Future Land Use	Current Use	Current Zoning	Proposed Zoning
608 Roselle Street	*Office/Residential Transition*	Vacant	Neighborhood Preservation (NP)	Office/Residential Transition (ORT)
PID: 630407000760	*Office/Residential Transition*	Vacant	Neighborhood Preservation (NP)	Office/Residential Transition (ORT)

The six properties proposed to be rezoned to Government Public Use (GPU) are all owned by the City of Port Orange and are either currently developed with a stormwater retention facility, the Devon Street lift station, or intended for the future expansion of the Train Depot Park. The proposed GPU zoning designation is consistent with the existing Future Land Use (FLU) designations for these properties. These properties serve a public function, and their current and planned uses are consistent with the intent of the GPU zoning classification.

The properties identified with parcel numbers are located south of Dunlawton Avenue and east of Nova Road were acquired by the City between 1998 and 2010; however, their

zoning designations were not updated at that time. The properties at 413 Herbert Street and 5797 Devon Street were recently purchased by the City.

Address	Current Future Land Use	Current Use	Current Zoning	Proposed Zoning
413 Herbert Street	*Warehouse/Industrial*	City Park	Neighborhood Preservation (NP)	Government Public Use (GPU)
Parcel ID: 630407001820 & 630407001401	*Office/Residential Transition*	City Drainage Pond	Planned Commercial Development (PCD)	Government Public Use (GPU)
Parcel ID: 634105000010 & 634104030142	*Urban Medium Density Residential (4-8 units/acre)*	City Drainage Pond	Multi-Family Residential (R-3M)	Government Public Use (GPU)
5797 Devon Street	*Suburban Residential (2-4 units/acre)*	City Lift Station	Single Family Residential (R-10SF)	Government Public Use (GPU)

To address the zoning inconsistencies, staff has prepared an administrative rezoning application for the subject properties. The proposed rezoning will bring the properties into compliance with the City's Comprehensive Plan and ensure consistency with the surrounding area, as well as the historic and/or intended use of the sites (see Exhibit 3).

The proposed rezoning of the subject properties has been reviewed in accordance with the criteria outlined in Chapter 3, Section 7 of the Land Development Code (LDC), with consideration given to consistency with the Comprehensive Plan and compatibility with surrounding land uses and zoning.

COMPATIBILITY WITH SURROUNDING USES AND ZONING DISTRICTS

The proposed zoning districts are appropriate for the subject properties and compatible with the surrounding development. The Zoning designations of adjacent properties, along with the current and proposed zoning designations for the subject properties, are illustrated on the attached maps (Exhibit 3).

CONSISTENCY WITH COMPREHENSIVE PLAN

The proposed rezonings are consistent with the pertinent Goals, Objectives, and Policies of the City's Comprehensive Plan and are compatible with adjacent properties. Compatibility is defined in the Comprehensive Plan as a condition in which dissimilar land uses can co-exist in relative proximity to one another in a stable fashion over time, such that neither use is negatively impacted by the other.

The properties proposed to be rezoned to the NP zoning district have either historically been developed with a single-family home, the properties proposed to be rezoned to ORT would allow for a consistent FLU and zoning, and the properties proposed to be rezoned to the GPU zoning district are owned by the city and are developed or will be developed for public purposes.

STAFF RECOMMENDATION

Staff recommends **approval** of the request to rezone:

1. ±0.46 acres of privately owned properties from Community Commercial (CC) and ±0.18 acres from Ridgewood Development (RD) to Neighborhood Preservation (NP) to allow for the existing single-family home on each property to be a conforming use
2. ±0.77 acres of privately owned properties from Neighborhood Preservation (NP) to Office/Residential Transition (ORT)
3. ±0.24 acres of city-owned properties from Neighborhood Preservation (NP) to Government Public Use (GPU)
4. ±1.07 acres of city-owned properties from Planned Commercial Development (PCD) to Government Public Use (GPU)
5. ±1.66 acres of city-owned properties from Multi-Family Residential (R-3M) to Government Public Use (GPU)
6. ±0.31 acres of city-owned properties from Single-Family Residential (R-10SF) to Government Public Use (GPU)

ATTACHMENTS

Exhibit 1: Ownership Information
Exhibit 2: Location Map
Exhibit 3: Current and Proposed Zoning

Exhibit 1: Ownership Information

Address	Owner
412 Jefferson Avenue	Brenda McMillian
414 Jefferson Avenue	Natalie Cappiello & John Labosco
416 Jefferson Avenue	Anthony McDermott
117 Fleming Avenue	Thomas Appelfeller & Lorna Linke
608 Roselle Street	Roselle Capital Holding LLC
Parcel ID: 630407000760	Eric V. Gill
413 Herbert Street	City of Port Orange
Parcel ID: 630407001820 & 630407001401	City of Port Orange
Parcel ID: 634105000010 & 634104030142	City of Port Orange
5797 Devon Street	City of Port Orange

Exhibit 2
Location Map

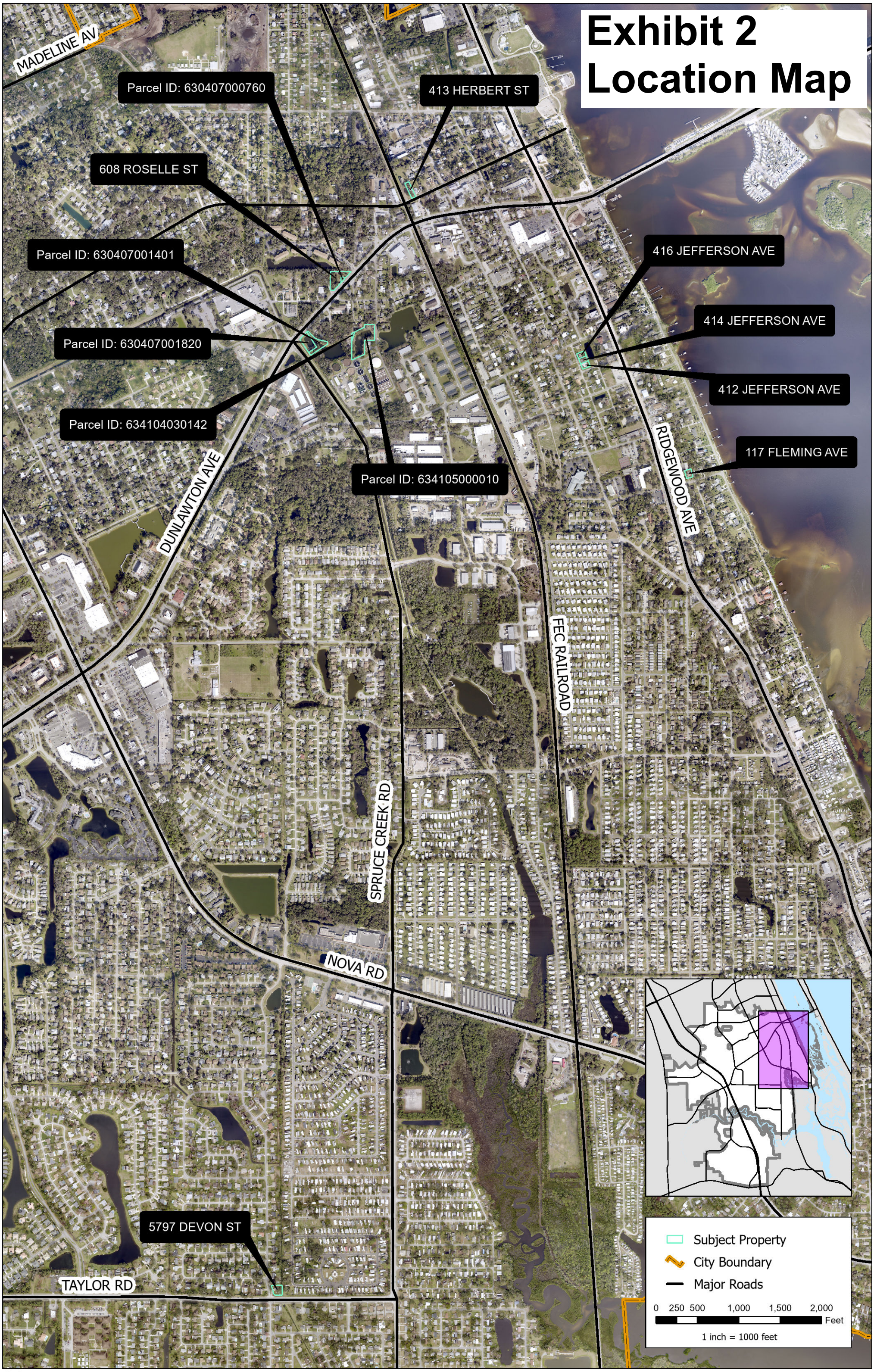

7/23/2025

Existing Zoning **Exhibit 3**

N
W E
S

Parcel ID: 630407000760
413 HERBERT ST
608 ROSELLE ST
Parcel ID: 630407001401
416 JEFFERSON AVE
414 JEFFERSON AVE
Parcel ID: 630407001820
412 JEFFERSON AVE
Parcel ID: 634104030142
117 FLEMING AVE
Parcel ID: 634105000010
DUNLAWTON AVE
RIDGEWOOD AVE
FEC RAILROAD
SPRUCE CREEK RD
NOVA RD
5797 DEVON ST
TAYLOR RD

Subject Property

Zoning

- Agriculture
- Commercial/Industrial
- Community Commercial
- Flood Plain-Conservation
- Government/Public Use
- Light Industrial
- Neighborhood Commercial
- Neighborhood Preservation
- Office Residential Transition
- Planned Commercial Development
- Planned Community-PO Riverwalk
- Planned Unit Development
- Professional Office
- R-10SF Single Family Residential
- R-2D Two Family Residential
- R-3L Multi-Family Residential
- R-3M Multi-Family Residential
- R-7SF Single Family Residential
- R-8SF Single Family Residential
- Residential Mobile Home
- Ridgewood Development
- Rural Residential
- Water Feature
- Parcel Boundaries
- City Boundary
- Major Roads

0 500 1,000 2,000 3,000 Feet

1 inch = 1000 feet

7/22/2025

Proposed Zoning **Exhibit 3**

N
W E
S

Parcel ID: 630407000760
413 HERBERT ST
608 ROSELLE ST
Parcel ID: 630407001401
416 JEFFERSON AVE
414 JEFFERSON AVE
Parcel ID: 630407001820
412 JEFFERSON AVE
Parcel ID: 634104030142
117 FLEMING AVE
Parcel ID: 634105000010
DUNLAWTON AVE
RIDGEWOOD AVE
FEC RAILROAD
SPRUCE CREEK RD
NOVA RD
5797 DEVON ST
TAYLOR RD

Subject Property

Zoning

- Agriculture
- Commercial/Industrial
- Community Commercial
- Flood Plain-Conservation
- Government/Public Use
- Light Industrial
- Neighborhood Commercial
- Neighborhood Preservation
- Office Residential Transition
- Planned Commercial Development
- Planned Community-PO Riverwalk
- Planned Unit Development
- Professional Office
- R-10SF Single Family Residential
- R-2D Two Family Residential
- R-3L Multi-Family Residential
- R-3M Multi-Family Residential
- R-7SF Single Family Residential
- R-8SF Single Family Residential
- Residential Mobile Home
- Ridgewood Development
- Rural Residential
- Water Feature
- Parcel Boundaries
- City Boundary
- Major Roads

0 500 1,000 2,000 3,000 Feet

1 inch = 1000 feet

7/22/2025

Business Impact Estimate

This form should be included in agenda packet for the item under which the proposed ordinance is to be considered, and must be posted on the City's website by the time notice of the proposed ordinance is published.

Proposed ordinance's title/reference: Ordinance No. 2025-19 – Administrative rezoning (Case No. REZONING-25-0004) involves 12 properties generally located on the east side of the City of Port Orange, east of Nova Road.

This Business Impact Estimate is provided in accordance with Section 166.041(4), Florida Statutes. If one or more boxes are checked below, this means the City is of the view that a business impact estimate is **not** required by state law[1] for the proposed ordinance, but the City is implementing the procedure required by statutory law to ensure that no inadvertent procedural issue could impact the enactment of the proposed ordinance. This Business Impact Estimate may be revised following its initial posting.

- ☐ The proposed ordinance is required for compliance with Federal or State law or regulation;
- ☐ The proposed ordinance relates to the issuance or refinancing of debt;
- ☐ The proposed ordinance relates to the adoption of budgets or budget amendments, including revenue sources necessary to fund the budget;
- ☐ The proposed ordinance is required to implement a contract or an agreement, including, but not limited to, any Federal, State, local, or private grant, or other financial assistance accepted by the municipal government;
- ☐ The proposed ordinance is an emergency ordinance;
- ☐ The ordinance relates to procurement; or
- ☒ The proposed ordinance is enacted to implement the following:
    a. Development orders, and development permits, as those terms are defined in s. 163.3164; and development agreements as authorized by the Florida Local Government Development Agreement Act under ss. 163.3220-163.3243;
    b. Comprehensive plan amendments and land development regulation amendments initiated by an application by a private party other than the municipality;
    c. Sections 190.005 and 190.046, *Florida Statutes*, regarding community development districts;
    d. Section 553.73, *Florida Statutes*, relating to the *Florida Building Code*; or
    e. Section 633.202, *Florida Statutes*, relating to the *Florida Fire Prevention Code*.

[1] See Section 166.041(4)(c), Florida Statutes.

In accordance with the provisions of controlling law, even notwithstanding the fact that, an exemption noted above may apply, the City hereby publishes the following information:

1. Summary of the proposed ordinance (must include statement of the public purpose, such as serving the public health, safety, morals, and welfare):

The proposed administrative rezoning is to address zoning inconsistencies with the current Future Land Use designation for the properties. Staff have prepared the administrative rezoning to bring the properties into compliance with the City's Future Land Use Map and ensure consistency with the surrounding area, as well as the historic and/or intended use of the properties.

2. An estimate of the direct economic impact of the proposed ordinance on private, for-profit businesses in the City, if any:

(a) An estimate of direct compliance costs that businesses may reasonably incur:
N/A

(b) Any new charge or fee imposed by the proposed ordinance or for which businesses will be financially responsible:
N/A

(c) An estimate of the City's regulatory costs, including estimated revenues from any new charges or fees to cover such costs:
N/A

3. Good faith estimate of the number of businesses likely to be impacted by the proposed ordinance: N/A

4. Additional information the governing body deems useful[2] (if any): N/A

[2] *You may wish to include in this section the methodology or data used to prepare the Business Impact Estimate. For example: City staff solicited comments from businesses in the City as to the potential impact of the proposed ordinance by contacting the local Chamber of Commerce, social media posting, direct mail or direct email, posting on City website, public workshop, etc. You may also wish to include efforts made to reduce the potential fiscal impact on businesses. You may also wish to state here that the proposed ordinance is a generally applicable ordinance that applies to all persons similarly situated (individuals as well as businesses) and, therefore, the proposed ordinance does not affect only businesses*.

CITY COUNCIL AGENDA ITEM

COUNCIL MEETING DATE 8/19/2025

SUBJECT: (G16) First Reading - Ordinance No. 2025-21- Code of Ordinances Amendment/Chapter 82 - Waterways - Installation of Private Aids to Navigation (PATONs)

DEPARTMENT: Community Development

GOAL: 1 - Public Safety; 2 - Infrastructure; 3 - Quality of Life

---

RECOMMENDED MOTION: Move to approve Ordinance No. 2025-21 and authorize the City Manager to sign all required environmental and navigational permit applications associated with the Riverwalk Park Day Dock project.

SUMMARY: The city's design consultant is currently working on permit applications for the Riverwalk Park Day Dock with outside agencies including St. Johns River Water Management District (SJRWMD), U.S. Coast Guard and Florida Fish and Wildlife Conservation Commission (FWC). The proposed day dock will extend perpendicular from the shoreline and accommodate mooring for up to ten (10) vessels, with flexibility to expand as demand grows.

As part of the permitting process, the Riverwalk Park Day Dock project is to include the installation of Private Aids to Navigation (PATONs) or regulatory markers to safely guide boaters through the access channel that will be dredged as part of the project surrounding the day dock and extending to the existing deep-water channel that leads to the Intracoastal Waterway (ICW). These PATONs to be installed are necessary for navigational safety, reducing the risk of vessel grounding, and supporting increased boat traffic in the area of the day dock.

Pursuant to the requirements of the permits for the day dock, the City is required to establish the legal authority to install and maintain the PATONs. The proposed amendment to Chapter 82 of the City's Code of Ordinances establishes the City of Port Orange's jurisdiction over the PATON plan. It also formally identifies the proposed waterway marker locations, as detailed in the attached PATON plan, which includes precise geographic coordinates for each pile installation. As designed by the city's consultant (Dredging & Marine Consultants) and reviewed by FWC and the U.S. Coast Guard, the PATON plan includes (3) green day beacons, (3) red day beacons and (2) shallow water markers. The PATONs will be installed as part of the day dock construction project.

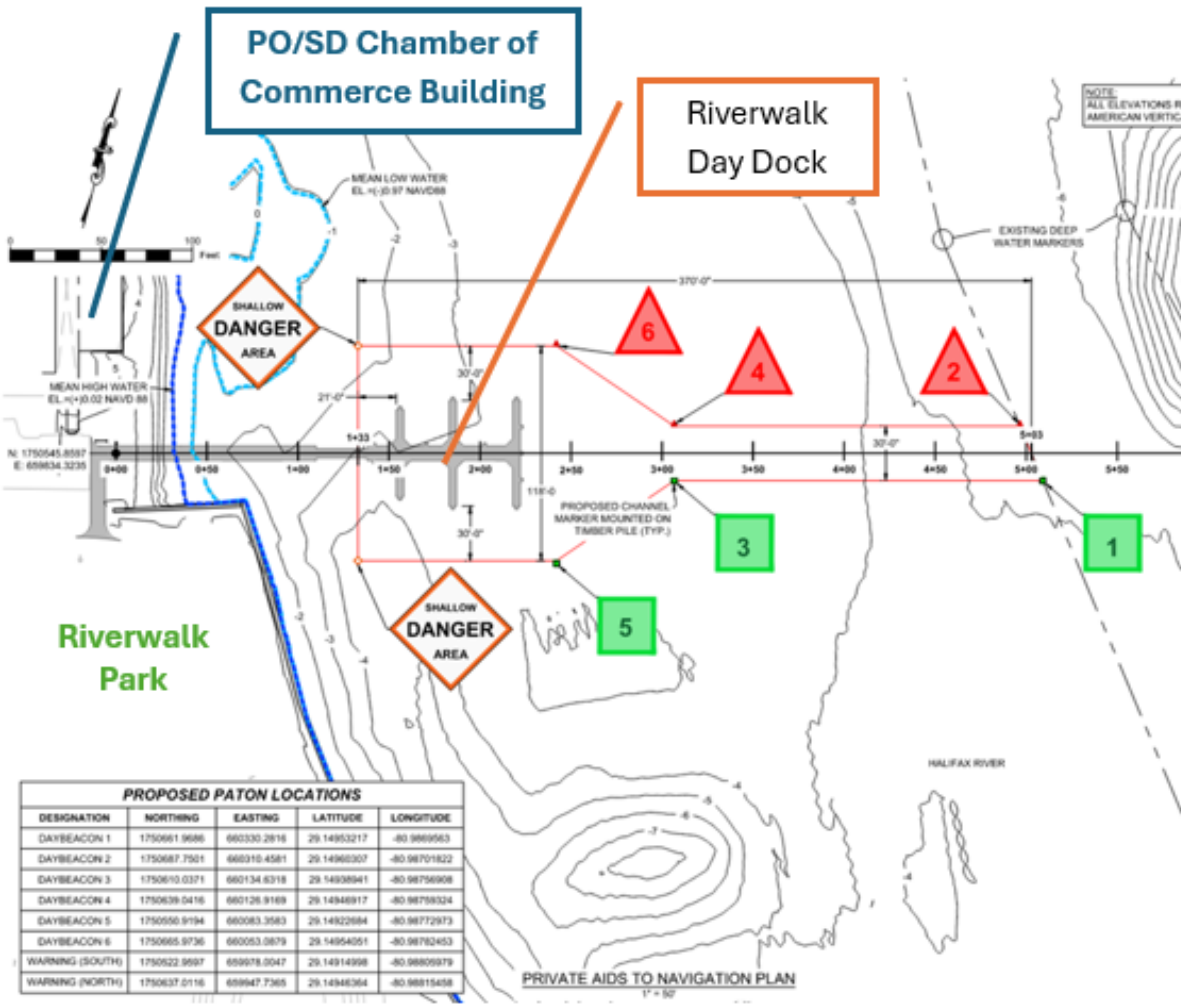

Private Aids to Navigation Plan showing the location and illustration of each waterway marker.

Once adopted by City Council, the ordinance will be submitted to the relevant permitting agencies to conclude the process for securing all required environmental and navigational permits. These permits are necessary to ensure compliance with federal, state, and local regulations protecting waterway safety.

PRESENTER: Tim Burman

ATTACHMENTS:

1.	Ordinance No. 2025-21 with exhibit	Ordinance No. 2025-21 with exhibit.pdf
2.	PATON Plan	PATON Plan.pdf
3.	Business Impact Estimate Form - Ord. 2025-21pdf	Business Impact Estimate Form - Ord. 2025-21pdf.pdf

Amanda Bonin	Created/Initiated - 07/17/2025
Tim Burman	Approved - 08/04/2025

Shannon Balmer	Approved - 08/12/2025
Wayne Clark	Final Approval - 08/13/2025

ORDINANCE NO. 2025-21

AN ORDINANCE OF THE CITY OF PORT ORANGE, VOLUSIA COUNTY, FLORIDA, AMENDING CHAPTER 82, ARTICLE I TO ESTABLISH A NEW SECTION 82-6 AUTHORIZING AND ADOPTING A PRIVATE AIDS TO NAVIGATION (PATON) PLAN FOR THE PURPOSE OF ESTALISHING JUIRDICTION TO INSTALL AND MAINTAIN UNIFORM WATERWAY MARKERS TO SAFELY GUIDE BOATERS TO AND FROM THE RIVERWALK DAY DOCK; AUTHORIZING THE CITY MANAGER TO SIGN ALL REQUIRED ENVIRONMENTAL AND NAVIGATIONAL PERMIT APPLICATIONS NECESSARY FOR THE RIVERWALK PARK DAY DOCK PROJECT; PROVIDING FOR CODIFICATION; PROVIDING FOR REPEAL OF CONFLICTING ORDINANCES; PROVIDING FOR SEVERABILITY; AND PROVIDING AN EFFECTIVE DATE.

WHEREAS, Section 327.40, Florida Statutes, sets forth the requirements and process for installing and maintaining uniform waterway markers by applying for a permit from the Division of Law Enforcement of the Fish and Wildlife Conservation Commission ("FWC"); and

WHEREAS, a requirement of the permitting process is to establish jurisdiction over the PATON plan for the purpose of implementing said plan; and

WHEREAS, the City of Port Orange desires to adopt a PATON plan, and establish jurisdiction for the purpose of installing and maintaining the PATON Plan in accordance with Chapter 327, Florida Statutes; and

WHEREAS, the City of Port Orange has determined that the adoption of the PATON plan is beneficial to the citizens of the City of Port Orange, Florida; and

WHEREAS, for purposes of this Ordinance, text with underlined (underlined) type shall constitute additions to the original text and text with strike-through (~~strike-through~~) type shall constitute deletions to the original text;

NOW, THEREFORE, BE IT ORDAINED BY THE CITY COUNCIL OF THE CITY OF PORT ORANGE, VOLUSIA COUNTY, FLORIDA:

SECTION 1. The City Council of the City of Port Orange, Florida hereby establishes Chapter 82, Article I, Section 82-6 of the Code of Ordinances to read as follows:

Sec. 82-6. – Riverwalk Park Day Dock Private Aids to Navigation (PATON) Plan.

In accordance with § 327 of the Florida Statutes related to uniform waterway markers, the city hereby adopts the Private Aids to Navigation (PATON) Plan, set forth hereinbelow as Figure 82:A. which formally identifies the proposed waterway marker locations including the precise geographic coordinates for each pile installation.

Figure 82:A – Riverwalk Park Day Dock Private Aids to Navigation (PATON) Plan

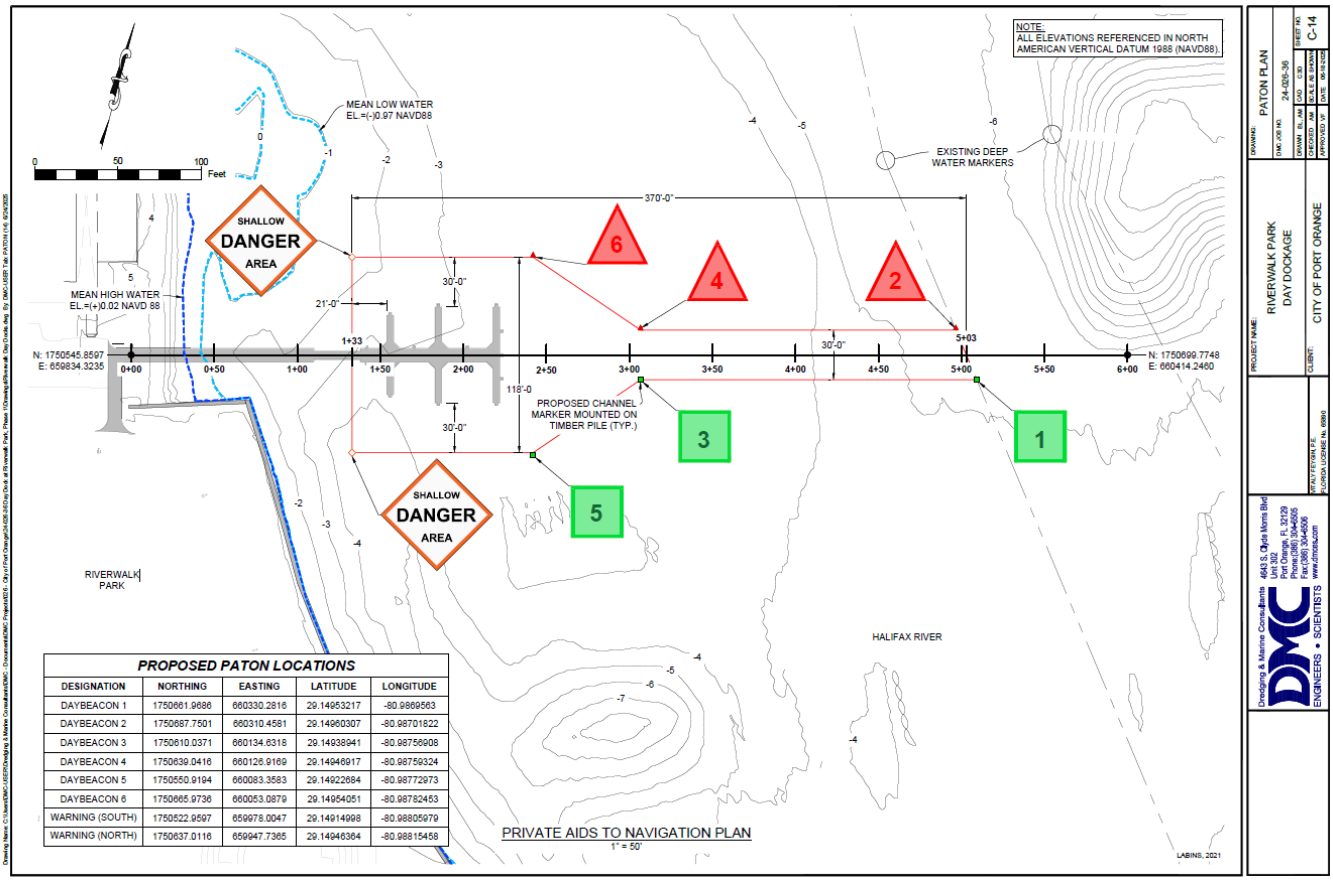

SECTION 2. The City Council of the City of Port Orange, Florida hereby adopts the PATON Plan, attached hereto as **Exhibit "A",** attached hereto and made a part hereof by reference.

SECTION 3. The City Council of the City of Port Orange, Florida hereby authorizes the City Manager to sign all necessary environmental and navigational permit applications associated with the Riverwalk Park Day Dock project.

SECTION 4. The provisions of this Ordinance shall become and be made a part of the Code of Ordinances of the City of Port Orange, and the Sections of this Ordinance may be renumbered or re-lettered to accomplish such intention. The Code codifier is granted liberal authority to codify the provisions of this Ordinance.

SECTION 5. All ordinances or parts of ordinances in conflict with the provisions of this ordinance are hereby repealed to the extent of such conflict.

SECTION 6. If any provision of this ordinance or the application thereof to any person or circumstance is held invalid, the invalidity shall not affect other provisions or applications of the ordinance which can be given effect without the invalid provision or application, and to this end the provisions of this ordinance are declared severable.

SECTION 7. This ordinance shall become effective immediately upon final passage by the City Council.

_____
MAYOR SCOTT STILTNER

ATTEST:

_____
Robin L. Fenwick, MMC, City Clerk

Passed on first reading on the day of _____, 2025

Passed and adopted on second and final reading on the day of _____, 2025

Reviewed and Approved:_____
Shannon K. Balmer, Senior Assistant City Attorney

EXHIBIT "A"

Drawing Name: C:\Users\DMC-USER\Dredging & Marine Consultants\DMC - Documents\DMC Projects\026 - City of Port Orange\24-026-36 Day Dock at Riverwalk Park, Phase 1\Drawings\Riverwalk Day Docks.dwg By: DMC-USER Tab: PATON (14) 6/24/2025

PROPOSED PATON LOCATIONS

DESIGNATION	NORTHING	EASTING	LATITUDE	LONGITUDE
DAYBEACON 1	1750661.9686	660330.2816	29.14953217	-80.9869563
DAYBEACON 2	1750687.7501	660310.4581	29.14960307	-80.98701822
DAYBEACON 3	1750610.0371	660134.6318	29.14938941	-80.98756908
DAYBEACON 4	1750639.0416	660126.9169	29.14946917	-80.98759324
DAYBEACON 5	1750550.9194	660083.3583	29.14922684	-80.98772973
DAYBEACON 6	1750665.9736	660053.0879	29.14954051	-80.98782453
WARNING (SOUTH)	1750522.9597	659978.0047	29.14914998	-80.98805979
WARNING (NORTH)	1750637.0116	659947.7365	29.14946364	-80.98815458

PRIVATE AIDS TO NAVIGATION PLAN

1" = 50'

RIVERWALK PARK

HALIFAX RIVER

MEAN HIGH WATER EL.:(+)0.02 NAVD 88

MEAN LOW WATER EL.:(-)0.97 NAVD88

N: 1750545.8597
E: 659834.3235

N: 1750699.7748
E: 660414.2460

SHALLOW DANGER AREA

SHALLOW DANGER AREA

PROPOSED CHANNEL MARKER MOUNTED ON TIMBER PILE (TYP.)

EXISTING DEEP WATER MARKERS

21'-0"

30'-0"

30'-0"

30'-0"

118'-0

370'-0"

0+00 0+50 1+00 1+33 1+50 2+00 2+50 3+00 3+50 4+00 4+50 5+00 5+03 5+50 6+00

1 2 3 4 5 6

NOTE:
ALL ELEVATIONS REFERENCED IN NORTH AMERICAN VERTICAL DATUM 1988 (NAVD88).

LABINS, 2021

Dredging & Marine Consultants
DMC
ENGINEERS • SCIENTISTS
4643 S. Clyde Morris Blvd
Unit 302
Port Orange, FL 32129
Phone:(386) 304-6505
Fax:(386) 304-6506
www.dmces.com

VITALY FEYGIN, P.E.
FLORIDA LICENSE No. 65890

PROJECT NAME:
RIVERWALK PARK
DAY DOCKAGE

CLIENT:
CITY OF PORT ORANGE

DRAWING:
PATON PLAN

DMC JOB NO.
24-026-36

DRAWN BL, AM | CAD C3D | SHEET NO. C-14
CHECKED AM | SCALE AS SHOWN
APPROVED VF | DATE 06-18-2025

NOTE:
ALL ELEVATIONS REFERENCED IN NORTH AMERICAN VERTICAL DATUM 1988 (NAVD88).

0 50 100 Feet

MEAN LOW WATER
EL.=(-)0.97 NAVD88

MEAN HIGH WATER
EL.=(+)0.02 NAVD 88

SHALLOW
DANGER
AREA

SHALLOW
DANGER
AREA

EXISTING DEEP
WATER MARKERS

370'-0"

30'-0"

21'-0"

30'-0"

118'-0

30'-0"

1+33

5+03

N: 1750545.8597
E: 659834.3235

N: 1750699.7748
E: 660414.2460

0+00 0+50 1+00 1+50 2+00 2+50 3+00 3+50 4+00 4+50 5+00 5+50 6+00

PROPOSED CHANNEL
MARKER MOUNTED ON
TIMBER PILE (TYP.)

6 4 2 3 1 5

RIVERWALK
PARK

HALIFAX RIVER

LABINS, 2021

PROPOSED PATON LOCATIONS

DESIGNATION	NORTHING	EASTING	LATITUDE	LONGITUDE
DAYBEACON 1	1750661.9686	660330.2816	29.14953217	-80.9869563
DAYBEACON 2	1750687.7501	660310.4581	29.14960307	-80.98701822
DAYBEACON 3	1750610.0371	660134.6318	29.14938941	-80.98756908
DAYBEACON 4	1750639.0416	660126.9169	29.14946917	-80.98759324
DAYBEACON 5	1750550.9194	660083.3583	29.14922684	-80.98772973
DAYBEACON 6	1750665.9736	660053.0879	29.14954051	-80.98782453
WARNING (SOUTH)	1750522.9597	659978.0047	29.14914998	-80.98805979
WARNING (NORTH)	1750637.0116	659947.7365	29.14946364	-80.98815458

PRIVATE AIDS TO NAVIGATION PLAN

1" = 50'

DRAWING: PATON PLAN
DMC JOB NO.: 24-026-36
SHEET NO.: C-14
DRAWN: BL, AM | CAD: C3D | SCALE: AS SHOWN | DATE: 06-18-2025
CHECKED: AM | APPROVED: VF

PROJECT NAME: RIVERWALK PARK DAY DOCKAGE

CLIENT: CITY OF PORT ORANGE

VITALY FEYGIN, P.E.
FLORIDA LICENSE No. 66890

Dredging & Marine Consultants
4643 S. Clyde Morris Blvd
Unit 302
Port Orange, FL 32129
Phone:(386) 304-6505
Fax:(386) 304-6506
www.dmces.com
ENGINEERS • SCIENTISTS

Drawing Name: C:\Users\DMC-USER\Dredging & Marine Consultants\DMC - Documents\DMC Projects\026 - City of Port Orange\24-026-36 Day Dock at Riverwalk Park, Phase 1\Drawings\Riverwalk Day Docks.dwg By: DMC-USER Tab: PATON (14) 6/24/2025

Print Form

Business Impact Estimate

This form should be included in the agenda packet for the item under which the proposed ordinance is to be considered and must be posted on the City's website by the time notice of the proposed ordinance is published.

Proposed ordinance's title/reference:
Ordinance No. 2025-21- Code of Ordinances Amendment/Chapter 82 - Waterways

This Business Impact Estimate is provided in accordance with Section 166.041(4), Florida Statutes. If one or more boxes are checked below, this means the City is of the view that a business impact estimate is **not** required by state law[1] for the proposed ordinance, but the City is implementing the procedure required by statutory law to ensure that no inadvertent procedural issue could impact the enactment of the proposed ordinance. This Business Impact Estimate may be revised following its initial posting.

- ☐ The proposed ordinance is required for compliance with Federal or State law or regulation;
- ☐ The proposed ordinance relates to the issuance or refinancing of debt;
- ☐ The proposed ordinance relates to the adoption of budgets or budget amendments, including revenue sources necessary to fund the budget;
- ☐ The proposed ordinance is required to implement a contract or an agreement, including, but not limited to, any Federal, State, local, or private grant, or other financial assistance accepted by the municipal government;
- ☐ The proposed ordinance is an emergency ordinance;
- ☐ The proposed ordinance relates to procurement; or
- ☑ The proposed ordinance is enacted to implement the following:
  a. Part II of Chapter 163, *Florida Statutes*, relating to growth policy, county and municipal planning, and land development regulation, including zoning, development orders, development agreements and development permits;
  b. Sections 190.005 and 190.046, *Florida Statutes*, regarding community development districts;
  c. Section 553.73, *Florida Statutes*, relating to the *Florida Building Code*; or
  d. Section 633.202, *Florida Statutes*, relating to the *Florida Fire Prevention Code*.

[1] See Section 166.041(4)(c), Florida Statutes.

In accordance with the provisions of controlling law, even notwithstanding the fact that, an exemption noted above may apply, the City hereby publishes the following information:

1. Summary of the proposed ordinance (must include statement of the public purpose, such as serving the public health, safety, morals, and welfare):

Under Florida Statutes §327.46(1)(b), the City is required to establish a boating restricted area by ordinance to have the legal authority to install and maintain the PATONs. The amendment to Chapter 82 of the Code of Ordinances establishes a boating restricted area and grants the City jurisdiction over the PATONs within the designated boating restricted area. It also formally identifies the proposed waterway marker locations, as detailed in the attached PATON plan, which includes precise geographic coordinates for each pile installation.

2. An estimate of the direct economic impact of the proposed ordinance on private, for-profit businesses in the City, if any:

(a) An estimate of direct compliance costs that businesses may reasonably incur:

N/A

(b) Any new charge or fee imposed by the proposed ordinance or for which businesses will be financially responsible:

N/A

(c) An estimate of the City's regulatory costs, including estimated revenues from any new charges or fees to cover such costs:

N/A

3. Good faith estimate of the number of businesses likely to be impacted by the proposed ordinance:

N/A

4. Additional information the governing body deems useful[2] (if any):

N/A

[2] *You may wish to include in this section the methodology or data used to prepare the Business Impact Estimate. For example: City staff solicited comments from businesses in the City as to the potential impact of the proposed ordinance by contacting the local Chamber of Commerce, social media posting, direct mail or direct email, posting on City website, public workshop, etc. You may also wish to include efforts made to reduce the potential fiscal impact on businesses. You may also wish to state here that the proposed ordinance is a generally applicable ordinance that applies to all persons similarly situated (individuals as well as businesses) and, therefore, the proposed ordinance does not affect only businesses.*

CITY COUNCIL AGENDA ITEM

COUNCIL MEETING DATE 8/19/2025

SUBJECT: (G17) Administrative Amendments to the Land Development Code (LDC)

DEPARTMENT: Community Development

GOAL: 6 - Organizational Excellence

RECOMMENDED MOTION: Move to approve Ordinance No. 2025-22/2025-23/2025-24/2025-25 to be stated with each agenda item separately.

SUMMARY: PLANNING COMMISSION ACTION (7/31/25): Recommended Approved (6-0)

Items 17a - 17d are part of a package of amendments to the Land Development Code (LDC), intended to update the Code and enhance its clarity, consistency, and overall effectiveness. As part of this ongoing maintenance effort, the proposed amendments include clarifications, procedural adjustments, and minor clean-up items designed to streamline the development review process. These amendments address issues identified during the practical application of the Code, correct inconsistencies, and ensure alignment with recently adopted state legislation.

17a. Chapter 12 Parking Space Width - Ordinance No. 2025-22: The LDC currently requires a standard off-street parking space to be a minimum of 10 feet in width by 20 feet in length. Over the past several years, multiple variances and Master Development Agreements have been approved, allowing parking spaces sized at 9 feet x 20 feet. The proposed amendment would establish the required size for a standard parking space as 9 feet by 20 feet, reduce the need for recurring variance requests or Master Development Agreements (MDAs), and streamline the development review process. To date, there have been no documented operational or safety issues within the parking lots developed with 9-foot x 20-foot spaces, including areas such as the Pavilion, LA Fitness, BJ's Wholesale Club, Target/Lowe's, Jimmy Hula's, Catfish Commons, First Watch, and Starbucks.

A 9-foot x 20-foot parking space is a common standard size across Florida and nationwide. Professional engineering organizations such as the Institute of Transportation Engineers (ITE), a professional association of transportation engineers, planners, consultants, educators, and public agency officials focused on the planning, design, operation, and management of transportation systems, have studied and documented that the 9-foot x 20-foot parking space accommodates the majority of passenger vehicles, including SUVs and light trucks. The proposed amendment to establish the width of a parking space to 9 feet is also consistent with the width standard

adopted by other municipalities in Volusia County, such as Ormond Beach, Daytona Beach, DeLand, Daytona Beach Shores, and South Daytona.

Reducing the minimum parking space width from 10 feet to 9 feet will provide greater flexibility in site design, particularly for infill, constrained, or redevelopment sites. This change allows for more efficient land use, creates additional opportunities for landscaping and stormwater management, may help reduce the overall impervious surface area, and reduces the requests for 9-foot-wide spaces through variances or MDAs.

17b. Chapter 3 Administration and Chapter 5 Subdivisions - Ordinance No. 2025-23: This proposed amendment to the LDC is to align the subdivision plat approval procedures with recent changes to Florida Statutes, effective July 1, 2025, following the enactment of Senate Bill 784 (SB 784). SB 784, titled the "Platting Reform", was passed unanimously by both the Florida Senate and House on April 29, 2025, and was signed into law by Governor Ron DeSantis on June 20, 2025 and mandates that subdivision plats and replats submitted pursuant to Section 177.091, Florida Statutes, be reviewed and approved administratively by staff, removing the requirement for a subdivision plat or replat to go to public hearings before the Planning Commission or City Council. According to SB 784, local governments must designate an administrative official to act as the approval authority for subdivision plat or replat applications.

The proposed amendment will revise the current requirements or add new requirements to the LDC to align with SB 784:
1) Designates the applicable administrative official (e.g., Community Development Director) as the authority to approve or deny plats and replats; and
2) Removes references to taking a plat or replat to a public hearing for review and approval, shifting approval from the City Council at a public hearing to administrative approval, similar to the process used for site plans.

The proposed amendment does not change any current subdivision design or standard construction details required by the LDC or change the staff review process; the requirement for a plat to be reviewed by a third-party surveyor, Planning Commission review for a variance related to a subdivision requirement in the LDC, and recording requirements for a plat all still must be met.

17c. Chapter 15 – Signs - Ordinance No. 2025-24: The LDC currently requires that messages displayed on an electronic message center (LED sign) must remain static for a minimum of 60 seconds before changing. Over the past few years, staff have received inquiries and feedback from businesses and property owner associations regarding the 60-second minimum message display time requirement being too restrictive, particularly from those with existing electronic message signs or those looking to install a sign with an electronic message center.

The proposed amendment would establish a minimum message display time for an electronic message sign of 10 seconds. This change provides greater flexibility in message rotation, allowing businesses to advertise or communicate more effectively while maintaining safeguards in the LDC, such as prohibiting rapid flashing or distracting animations that could impact traffic safety or alter the visual character of surrounding neighborhoods. The proposed 10-second message display time is consistent with

standards adopted by other nearby municipalities, such as Ormond Beach, New Smyrna Beach, South Daytona, and Volusia County, where the minimum message display time ranges between 5 and 15 seconds.

Studies conducted by the Federal Highway Administration (FHWA) and the International Sign Association (ISA) have found that message changes at intervals of 8 to 10 seconds do not pose a significant distraction to drivers when signs are properly designed, regulated, and do not flash, scroll, animate, or have excessive brightness. The proposed amendment does not change any of the existing LDC requirements that prohibit animation, flashing, or brightness limits as these safeguards will remain fully in effect.

Allowing a 10-second message display time will enable content to be displayed and updated more frequently, enhancing businesses' ability to communicate effectively with the public. The proposed change will allow a sign with an electronic message center to be used as a communication and marketing tool for businesses while maintaining visual and safety standards.

17d. Chapter 16 - Miscellaneous Regulations - Ordinance No. 2025-25: The LDC provides the setbacks for various types of accessory structures, including sheds, carports, pools, pool enclosures, concrete or paver patios, and elevated decks. For most of these accessory structures, the side and rear setbacks typically range between 5 feet to 10 feet. However, for an elevated wood deck, the required side and rear setbacks are determined by the height of the deck, using the following formula: 5 feet + 2 feet for every 1 foot above grade.

Over the past several years, several elevated wood decks have been proposed, but due to the large setbacks required under this current setback formula, many residents have either chosen not to move forward with their projects or have revised them to be structural additions to the home with rooftop decks instead of the open deck concept, since the setbacks are less than the elevated wood deck setbacks.



Figure 1. Examples of elevated decks similar to projects proposed in the past that would not comply with current setback requirements

The proposed amendment would revise the side and rear setback requirements for an elevated deck to align with either the setbacks currently required in the LDC for an elevated deck or the side and rear yard setbacks for the principal structure, based on

the property's zoning, whichever is less. For example, on a property zoned Neighborhood Preservation (NP), the setbacks for the principal structure are as follows: Side, 7.5 feet, and Rear, 25 feet.

Under the current setback requirement for an elevated deck, a deck elevated 10 feet above grade would require both side and rear setbacks of 23 feet (based on the formula: 5 feet from the property line + 2 feet for every 1 foot above grade). If the proposed amendment is adopted, the required side setback would be reduced to 7.5 feet, while the rear setback would remain 23 feet, since it is less than the zoning-required 25 feet. The proposed amendment will provide homeowners with more options for placing elevated decks by allowing them to use the smaller of the two setback requirements. This amendment also aligns elevated deck setbacks more closely with those of the principal structure, promoting uniformity within neighborhoods.

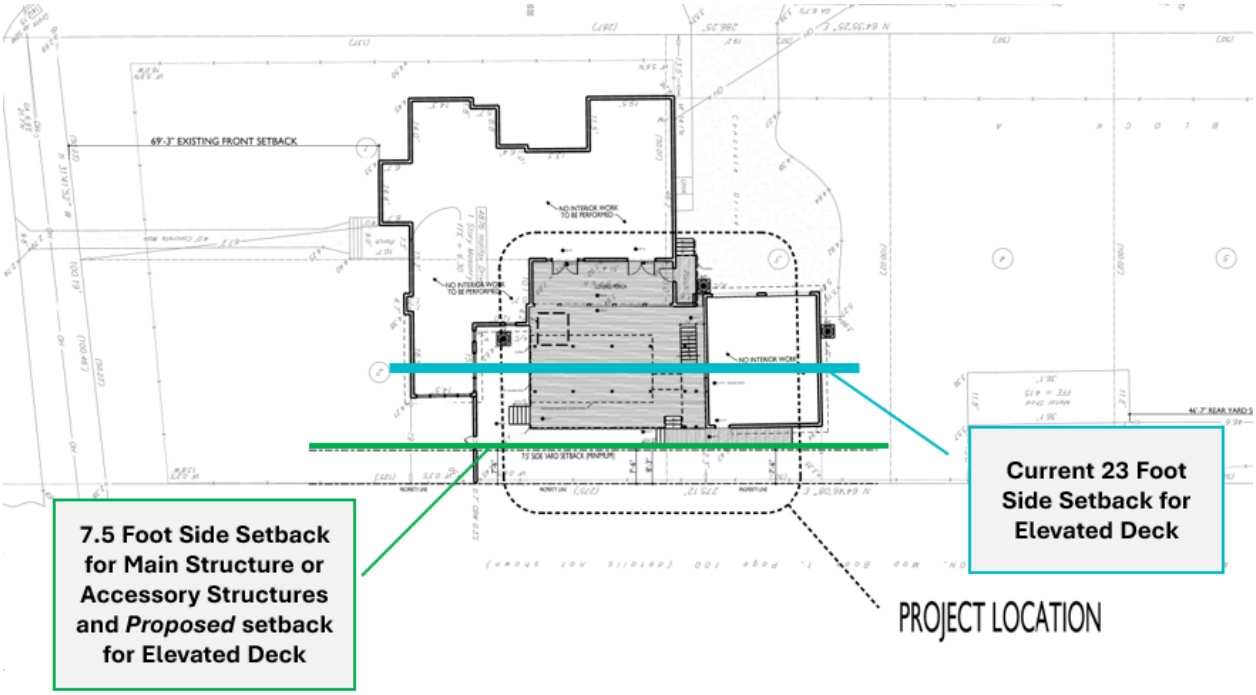

Figure 2. Site Layout for a 10-foot elevated deck with the current setback (blue) and the proposed setback (green)

PRESENTER: Tim Burman

ATTACHMENTS:

1.	Final Staff Report - Chapter 3 5 1215 and 16	Final Staff Report - Chapter 3 5 1215 and 16.pdf

Amanda Bonin	Created/Initiated - 08/01/2025
Tim Burman	Approved - 08/04/2025
Shannon Balmer	Approved - 08/12/2025
Wayne Clark	Final Approval - 08/13/2025

STAFF REPORT

CASE NO. DCAM-25-0003

LDC TEXT AMENDMENT / CHAPTERS 3, 5, 12, 15, and 16

REQUEST:	To amend Chapter 3, 5, 12, 15, and 16 of the Land Development Code (LDC), as part of an effort to update the LDC.
APPLICANT:	City of Port Orange
STAFF RECOMMENDATION:	Approval
STAFF CONTACT:	Tim Burman, Community Development Director (386) 506-5675
PLANNING COMMISSION DATE:	July 31, 2025

INTRODUCTION:

Staff has been updating the Code in phases over the past several years. Prior amendments included updates to sign regulations, the “green” building initiative, erosion control, updates to Building Code references, county-wide Traffic Impact Analysis standards, school concurrency, Construction Standards modifications, impact fees, site plan and subdivision regulations, removal of select uses from the Ridgewood Corridor zoning district, zero lot line homes in the R-2D zoning district, microbreweries, architecture requirements, economic development, Ridgewood targeted businesses, tree preservation, entertainment districts, home based businesses and others

SUMMARY OF PROPOSED AMENDMENT

The proposed amendments in this package are intended to improve the content of the existing Code, as part of this on-going maintenance effort. The proposed amendments include clarifications, procedural and minor changes that are simple clean-up items that make the Code and the development review process more efficient and consistent, or amendments to address problems or issues encountered when applying the Code.

CHAPTER 12 – ROADS AND VEHICULAR USE AREAS: The current requirement in the LDC requires standard off-street parking spaces to be a minimum of 10 feet in width by 20 feet in length. Over the past several years, multiple variances and Master Development Agreements have been approved allowing parking spaces sized at 9' x 20' to be developed. The proposed amendment to the code would establish the size of a parking space to be 9’ X 20’ and reduce the need for recurring variance requests, streamlining the development review process. To date, there have been no documented operational or safety issues within the parking lots that have been developed with 9' x 20' spaces.

A 9' x 20' parking space is a common standard size across Florida and nationwide. Professional engineering organizations such as the Institute of Transportation Engineers (ITE), a professional association of transportation engineers, planners, consultants, educators, and public agency officials focused on the planning, design, operation, and management of transportation systems, have studied and documented that the 9’ x 20’ parking space accommodates the majority of passenger vehicles, including SUVs and light trucks. The proposed parking space size is also consistent with standards adopted by other municipalities in Volusia County (Table 2), where most jurisdictions, including neighboring communities, allowing 9’ wide parking spaces.

Table 2. Parking Space Width Comparison

	Proposed Parking Space Width Requirement
***Proposed* - Port Orange**	**9’**
	Parking Space Width Requirements
Current - Port Orange	10’
New Smyrna Beach	10’
Daytona Beach	9’
Ormond Beach	9’
Deland	9’
South Daytona	9’
Daytona Beach Shores	9’

Reducing the minimum parking space size width from 10’ to 9’ will provide greater flexibility in site planning, particularly for infill or constrained sites. This allows for more efficient use of developable land, enhanced opportunities for landscaping and stormwater management, and potential reduction in impervious surface area.

CHAPTER 3 – ADMINISTRATION and CHAPTER 5 – SUBDIVISIONS: This proposed amendment to the LDC is to align the plat approval procedures with recent changes to Florida Statutes, effective July 1, 2025, following the enactment of Senate Bill 784 (SB 784). SB 784 mandates that plats and replats submitted pursuant to Section 177.091, Florida Statutes, be reviewed and approved administratively, removing the requirement for public hearings before the Planning Commission or City Council. Under the new law, local governments must designate an administrative official to act as the approval authority for such applications.

This proposed amendment will revise the current requirements or add new requirements to the LDC based on the passing of SB 784: 1) designates the applicable administrative official (e.g., Community Development Director) as the authority to approve or deny plats and replats; and 2) removes references to taking a plat or replat to a public hearing for review and approval.

The proposed amendment does not change any current subdivision design or standard construction details required by the LDC or change the staff review process, requirement for a plat to be reviewed by a third-party surveyor, Planning Commission review for a variance related to a subdivision requirement in Chapter 5 of the LDC, and recording requirements that all plats must meet. The proposed text amendment revises

the approval process for a plat or replat, shifting it from City Council at public hearing, to an administrative approval, similar to the process used for site plans

CHAPTER 15 – SIGNS: The current requirement in the LDC requires that messages displayed on an electronic message center (LED sign) remain static for a minimum of 60 seconds before changing. Over the past few years, staff have received inquiries and feedback from businesses and property owner associations regarding the 60-second minimum message display time requirement being too restrictive, particularly from those with existing electronic message signs or those looking to install one.

The proposed amendment would reduce the minimum message display time for electronic message sign from 60 seconds to 10 seconds. This change allows for greater flexibility in message rotation, enabling businesses to advertise or communicate more effectively while maintaining important safeguards, such as prohibiting rapid flashing or distracting animations that could impact traffic safety or alter the visual character of surrounding neighborhoods.

This proposed 10-second message display time is consistent with standards adopted by other municipalities in Volusia County, where most jurisdictions, including neighboring communities, allow message display to change every 5 to 15 seconds. Aligning with these minimum message display times ensures that Port Orange remains current with sign regulations (Table 1).

Table 1. Minimum Message Display Time for Electronic Message Sign

Jurisdiction	**Minimum Message Display Time**
***Proposed* - Port Orange**	**10 seconds**
Jurisdiction	**Minimum Message Display Time**
Current - Port Orange	60 seconds
Daytona Beach	60 seconds
Ormond Beach	15 seconds
New Smyrna Beach	8 seconds
Volusia County	8 seconds
South Daytona	5 seconds

Studies conducted by the Federal Highway Administration (FHWA) and the International Sign Association (ISA) have found that message changes at intervals of 8 to 10 seconds do not pose a significant distraction to drivers when signs are properly designed, regulated, and do not flash, scroll, animate, and have excessive brightness. The proposed amendment does **not** change any of the existing LDC requirements that prohibit animation, flashing, or brightness limits as these safeguards will remain fully in effect.

Allowing a 10-second message display time will enable content to be displayed and updated more frequently, enhancing businesses' ability to communicate effectively with the public. The proposed change will allow a sign with an electronic message center

(see Figure 1) to be used as a communication and marketing tool while maintaining visual and safety standards.



Figure 1. Photos of signs in Port Orange featuring electronic message signs
From left to right: a multi-tenant sign, a gas station sign, and an individual commercial sign.

For a multi-tenant commercial center in Port Orange that uses electronic message centers (LED signs) to advertise multiple businesses within a single complex, reducing the message duration allows more tenants to be featured within a given time period, improving visibility for all tenants. For individual businesses with an electronic message sign, a shorter message display time offers the opportunity to display various aspects of their operations, such as promotions, operating hours, events, and prices.

CHAPTER 16 - MISCELLANEOUS REGULATIONS: In this Chapter of the LDC, setbacks are provided for various types of accessory structures, including sheds, carports, pools, pool enclosures, concrete or paver patio, and elevated decks. For most of these accessory structures, the side and rear setbacks typically range between 5 feet to 10 feet However, for elevated wood deck, the required side and rear setbacks are determined by the height of the deck, using the following formula: 5 feet + 2 feet for every 1 foot above grade.

Over the past several years, a number of elevated wood decks have been proposed, but due to the large setbacks required under this setback formula, many residents have either chosen not to move forward with their projects or have revised them to be structural additions to the home with rooftop decks instead of the open deck concept.

The proposed amendment would revise the side and rear setback requirements for elevated decks to align with either the setbacks currently required in the LDC for elevated decks or the side and rear yard setbacks for the principal structure based on the property's zoning, whichever is less. For example, on a property zoned Neighborhood Preservation (NP), the setbacks for the principal structure are Side: 7.5 feet and Rear: 25 feet. The LDC currently only allowed elevated decks to be located within the rear and side yards only and outside of any recorded easement. This requirement is not being revised as part of this amendment.

Under the current LDC standard for elevated decks, a deck elevated 10 feet above grade would require both side and rear setbacks of 23 feet (based on the formula: 5 feet from the property line + 2 feet for every 1 foot above 1 foot above grade). If the proposed amendment is adopted, the required side setback would be reduced to 7.5

feet, while the rear setback would remain 23 feet, since it is less than the zoning-required 25 feet.

The proposed amendment will allow homeowners more options for placing elevated decks by using the smaller of two setback requirements and aligns elevated deck setbacks more closely with principal structure, promoting uniformity within neighborhoods. The modified setback addresses real-world development needs, while continuing to protect neighboring properties and uphold community character.

RECOMMENDATION:
Staff is recommending approval to amend Chapter 3, 5, 12, 15, and 16 of the Land Development Code as discussed in this staff report.

ORDINANCE NO. 2025-22

AN ORDINANCE OF THE CITY OF PORT ORANGE, VOLUSIA COUNTY, FLORIDA AMENDING THE LAND DEVELOPMENT CODE CHAPTER 12 RELATING TO DESIGN STANDARDS FOR OFF-STREET PARKING AND LOADING AREAS TO AMEND THE MINIMUM DIMENSIONAL REQUIREMENTS FOR OFF-STREET PARKING SPACES; PROVIDING FOR REPEAL OF CONFLICTING ORDINANCES; PROVIDING FOR SEVERABILITY; AND PROVIDING AN EFFECTIVE DATE.

WHEREAS, the proposed amendments are necessary to improve the content of the existing Land Development Code ("Code") as part of an ongoing maintenance effort to make the Code more efficient in its application as well as updated to respond to the current conditions in the community; and

WHEREAS, the Planning Commission has recommended amendments to the Land Development Code; and

WHEREAS, for purposes of this ordinance words with underlined (underlined) type shall constitute additions to the original text and words with strikethrough (~~strikethrough~~) type shall constitute deletions from the original text.

NOW, THEREFORE, BE IT ENACTED BY THE CITY COUNCIL OF THE CITY OF PORT ORANGE, VOLUSIA COUNTY, FLORIDA:

SECTION 1: The City Council of the City of Port Orange hereby amends Chapter 12, Section 6 of the Land Development Code, to read as follows:

Chapter 12 – ROADS AND VEHICULAR USE AREAS

Section 6: Design standards for off-street parking and loading areas.

No change to subsection (a).

(b) *Size.*

(1) *Parking spaces.*

(a) A standard parking space shall be ~~ten~~ nine feet wide and 20 feet long.

(b) Compact parking spaces shall be 8½ feet wide and 17 feet long.

(c) Parallel parking spaces shall be a minimum of ~~ten~~ nine feet wide and 22 feet long.

(d) A tandem parking space is a parking space that abuts a second parking space in such a manner that vehicular access to the second space can be made only through the abutting (tandem) space. Tandem parking spaces shall be a minimum of ~~ten~~ nine feet wide and 20 feet long, and may only be used for residential uses in accordance with requirements of this chapter.

(e) Standard motorcycle parking space shall be a minimum of four feet wide and ten feet long. Motorcycle spaces shall be constructed of concrete or other acceptable hard surfaces other than asphalt.

(f) Spaces for handicapped parking shall be the size specified by the applicable Florida Statutes.

(2) *Loading spaces.* The standard off-street loading space shall be 12 feet wide, 25 feet long, provide vertical clearance of 15 feet, and provide adequate area for maneuvering, ingress and egress. The city may require the length of one or more of the loading spaces to be increased up to 55 feet if full-length tractor-trailers are anticipated to be accommodated. Developers may install spaces that are larger than the standard, but the number of spaces shall not be reduced on that account.

(c) *Layout.*

No change to sub-subsection (1).

(2) *Dimensions.* The following table and illustration prescribe the required minimum dimensions of all parking spaces.

Figure 12:2

Minimum Dimensions for Parking Spaces

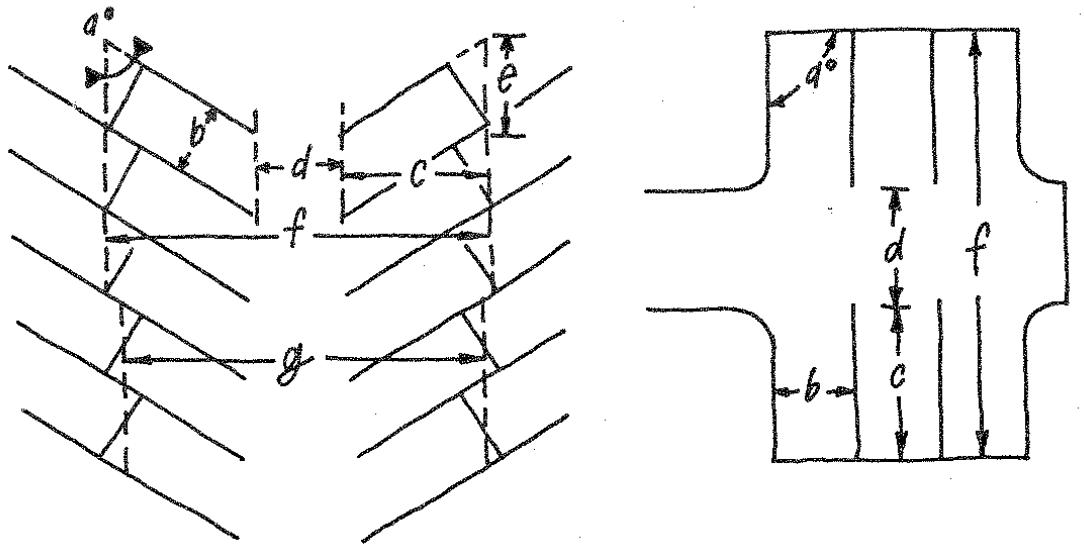

TABLE FOR PARKING LOT DIMENSIONS

a	b	c	d	e	f	g
20	~~10'~~ 9'	16.2'	11.0'	~~29.2'~~ 18.3'	43.4'	~~43.0'~~ 27.2'
30	~~10'~~ 9'	18.7'	11.0'	~~20.0'~~ 20.7'	48.4'	~~39.7'~~ 29.7'
40	~~10'~~ 9'	20.5'	12.0'	~~15.6'~~ 21.5'	53.0'	~~45.3'~~ 32.5'
45	~~10'~~ 9'	21.2'	13.0'	~~14.1'~~ 21.4'	55.4'	~~48.3'~~ 34.2'
50	~~10'~~ 9'	21.8'	12.0'	~~13.1'~~ 20.9'	55.6'	~~49.2'~~ 33.8'
60	~~10'~~ 9'	22.4'	18.0'	~~11.5'~~ 19.0'	62.8'	~~57.8'~~ 40.0'
70	~~10'~~ 9'	22.1'	18.0'	~~10.6'~~ 16.0'	62.2'	~~58.8'~~ 40.1'
80	~~10'~~ 9'	21.5'	24.0'	~~10.2'~~ 12.6'	67.0'	~~65.3'~~ 45.5'
90	~~10'~~ 9'	20.0'	24.0'	~~10.0'~~ 9.0'	64.0'	~~—~~ 44'

Reductions in required width and length may be permitted under the following conditions. Such reductions shall be utilized to reduce pavement area, preserve significant trees or vegetation or increase landscaped areas. The unpaved area resulting from such reductions shall not be credited towards required vehicular use landscaping or be included within required buffers.

~~(a) Reduced width. An unlimited number of spaces may be approved to be reduced to nine feet wide to increase internal landscaped area above the minimums specified by this code, and to preserve existing specimen trees.~~

(~~b~~a) Reduced length. Designers are encouraged to reduce paved areas by reducing the length of standard parking spaces to 18 feet of pavement with two feet of grassed

overhang area. Continuous curbing or wheel stops shall be used at the end of the 18-foot dimension.

No change to the remainder of this Section 6.

SECTION 2: The City Council of the City of Port Orange hereby amends Chapter 12, Section 7 of the Land Development Code, to read as follows:

Chapter 12 – ROADS AND VEHICULAR USE AREAS

Section 7: Required stacking area for drive-through facilities.

All commercial and office uses utilizing drive-through facilities shall provide vehicle stacking area based on the following criteria:

(a) *Size of space.* Stacking area shall be designed based on a ~~ten~~nine-foot by 22-foot space per required vehicle.

No change to the remainder of this Section 7.

SECTION 3: All ordinances or parts of ordinances in conflict with the provisions of this ordinance are hereby repealed to the extent of such conflict.

SECTION 4. Scrivener's Errors. Typographical errors and other matters of a similar nature that do not affect the intent of this Ordinance, as determined by the City Clerk and City Attorney, may be corrected.

SECTION 5. The provisions of this Ordinance shall become and be made a part of the Land Development Code of the City of Port Orange, and the Sections of this Ordinance may be renumbered or re-lettered to accomplish such intention. The Code codifier is granted liberal authority to codify the provisions of this Ordinance.

SECTION 6. If any provision of this ordinance or the application thereof to any person or circumstance is held invalid, the invalidity shall not affect other provisions or applications of the ordinance which can be given effect without the invalid provision or application, and to this end the provisions of this ordinance are declared severable.

SECTION 7. This Ordinance shall take effect immediately upon adoption.

_____
MAYOR SCOTT STILTNER

ATTEST:

_____
Robin L. Fenwick, MMC, City Clerk

Passed on first reading on the day of

Passed and adopted on second and final reading on the day of

Reviewed and Approved: _____
Shannon K. Balmer, Senior Assistant City Attorney

Print Form

Business Impact Estimate

This form should be included in the agenda packet for the item under which the proposed ordinance is to be considered and must be posted on the City's website by the time notice of the proposed ordinance is published.

Proposed ordinance's title/reference:
Ordinance No. 2025-22 - Land Development Code (LDC) Amendment/Chapter 12 Roads and Vehicular Use Areas - Parking Space Width

This Business Impact Estimate is provided in accordance with Section 166.041(4), Florida Statutes. If one or more boxes are checked below, this means the City is of the view that a business impact estimate is **not** required by state law[1] for the proposed ordinance, but the City is implementing the procedure required by statutory law to ensure that no inadvertent procedural issue could impact the enactment of the proposed ordinance. This Business Impact Estimate may be revised following its initial posting.

- ☐ The proposed ordinance is required for compliance with Federal or State law or regulation;
- ☐ The proposed ordinance relates to the issuance or refinancing of debt;
- ☐ The proposed ordinance relates to the adoption of budgets or budget amendments, including revenue sources necessary to fund the budget;
- ☐ The proposed ordinance is required to implement a contract or an agreement, including, but not limited to, any Federal, State, local, or private grant, or other financial assistance accepted by the municipal government;
- ☐ The proposed ordinance is an emergency ordinance;
- ☐ The proposed ordinance relates to procurement; or
- ☑ The proposed ordinance is enacted to implement the following:
  a. Part II of Chapter 163, *Florida Statutes*, relating to growth policy, county and municipal planning, and land development regulation, including zoning, development orders, development agreements and development permits;
  b. Sections 190.005 and 190.046, *Florida Statutes*, regarding community development districts;
  c. Section 553.73, *Florida Statutes*, relating to the *Florida Building Code*; or
  d. Section 633.202, *Florida Statutes*, relating to the *Florida Fire Prevention Code*.

[1] See Section 166.041(4)(c), Florida Statutes.

In accordance with the provisions of controlling law, even notwithstanding the fact that, an exemption noted above may apply, the City hereby publishes the following information:

1. Summary of the proposed ordinance (must include statement of the public purpose, such as serving the public health, safety, morals, and welfare):

The proposed amendment would establish the required size for a standard parking space as 9 feet by 20 feet, reduce the need for recurring variance requests or Master Development Agreements (MDAs), and streamline the development review process. To date, there have been no documented operational or safety issues within the parking lots developed with 9-foot x 20-foot spaces, including areas such as the Pavilion, La Fitness, BJ Wholesale Club, Target/Lowe's, Jimmy Hula's, Catfish Commons, First Watch, and Starbucks.

2. An estimate of the direct economic impact of the proposed ordinance on private, for-profit businesses in the City, if any:

(a) An estimate of direct compliance costs that businesses may reasonably incur:

N/A

(b) Any new charge or fee imposed by the proposed ordinance or for which businesses will be financially responsible:

N/A

(c) An estimate of the City's regulatory costs, including estimated revenues from any new charges or fees to cover such costs:

N/A

3. Good faith estimate of the number of businesses likely to be impacted by the proposed ordinance:

N/A

4. Additional information the governing body deems useful[2] (if any):

N/A

[2] *You may wish to include in this section the methodology or data used to prepare the Business Impact Estimate. For example: City staff solicited comments from businesses in the City as to the potential impact of the proposed ordinance by contacting the local Chamber of Commerce, social media posting, direct mail or direct email, posting on City website, public workshop, etc. You may also wish to include efforts made to reduce the potential fiscal impact on businesses. You may also wish to state here that the proposed ordinance is a generally applicable ordinance that applies to all persons similarly situated (individuals as well as businesses) and, therefore, the proposed ordinance does not affect only businesses.*

ORDINANCE NO. 2025-23

AN ORDINANCE OF THE CITY OF PORT ORANGE, VOLUSIA COUNTY, FLORIDA AMENDING THE LAND DEVELOPMENT CODE CHAPTER 3 ADMINISTRATION AND CHAPTER 5 SUBDIVISIONS RELATING TO PLAT APPROVAL PROCEDURES TO ENSURE CONSISTENCY AND COMPLIANCE WITH RECENTLY ADOPTED STATE LEGISLATION AMENDING SECTION 177.071, FLORIDA STATUTES, REQUIRING CERTAIN PLAT AND REPLAT SUBMITTALS BE ADMINSTRATIVELY APPROVED WITHOUT FURTHER ACTION BY THE GOVERNING BODY; REQUIRING THE DESIGNATION OF AN ADMINISTRATIVE AUTHORITY FOR THE PLAT REVIEW AND APPROVAL PROCESSES; SETTING FORTH THE REVIEW TIMEFRAME AND NOTICE REQUIREMENTS RELATED TO THE APPROVAL PROCESS FOR PLAT AND REPLAT SUBMITTALS; CONFORMING SECTION 177.111, FLORIDA STATUTES, TO BE CONSISTENT WITH SECTION 177.071, FLORIDA STATUTES; PROVIDING FOR REPEAL OF CONFLICTING ORDINANCES; PROVIDING FOR SEVERABILITY; AND PROVIDING AN EFFECTIVE DATE.

WHEREAS, the recent changes to state legislation requires changes to the Land Development Code as it relates to the regulation of home-based businesses; and

WHEREAS, amendments to Chapters 3 and 5 of the Land Development Code (“Code”) are necessary to implement the changes for consistency and compliance with Florida Statutes; and

WHEREAS, the Planning Commission has recommended amendments to the Land Development Code; and

WHEREAS, for purposes of this ordinance words with underlined (underlined) type shall constitute additions to the original text and words with strikethrough (~~strikethrough~~) type shall constitute deletions from the original text.

NOW, THEREFORE, BE IT ENACTED BY THE CITY COUNCIL OF THE CITY OF PORT ORANGE, VOLUSIA COUNTY, FLORIDA:

SECTION 1. The City Council of the City of Port Orange hereby amends Chapter 3, of the Land Development Code, to read as follows:

Chapter 3 – Administration

[No changes to sections 1 and 2]

Section 3: Development plan review process.

(a) *Designation of plans as major or minor development.* For purposes of review and approval under this code, all plans shall be designated as minor development or major development as outlined below.

(1) *Major development.* A development plan shall be designated as a major development if it meets one or more of the following criteria:

~~a. The plan includes the final plat for the subdivision of land.~~

~~b~~a. The plan is for the rezoning to PUD or PCD district and the establishment of a new master development agreement (MDA) and conceptual development plan (CDP), the establishment of a new MDA and CDP in the PC-A or PC-R district, an amendment to an approved MDA or CDP, or is so deemed a major development in an approved MDA.

~~c~~b. The plan is part of a larger development proposal or poses special development issues that require the additional review of a major development, as determined by the administrative official.

(2) *Minor development.* A development plan shall be designated as a minor development if it:

a. ~~f~~Fails to meet the criteria for a major development listed above.

b. The plan includes the final plat or replat for the subdivision of land submitted under F.S. ch. 177.

c. ~~, and is n~~Not exempt from the requirement for a development order under section 2(b) above.

(b) *Pre-application conference.* Prior to submitting a development review application, the applicant shall meet with the administrative official or his/her designee(s), in order to verify the steps necessary for application and review, and discuss potential issues regarding the development proposal. Comments made at the pre-application conference are intended to provide guidance and are nonbinding on the formal review of the development plans, except that an applicant may request a written confirmation of the designation of the proposal as a major or minor development.

(c) *Application for development plan review.* Applications for development plan review shall be made to the department utilizing the form provided by the department for that purpose, and accompanied by the appropriate review fee, as adopted by resolution of the city council. Application shall be accompanied by the appropriate number of proposed plans, as determined by the administrative official based upon the size and scope of the proposed development. Plans shall be signed and sealed by a registered engineer, architect, landscape architect, where required by this code. Plans shall be prepared according to the standards of this code.

(1) *Review of application materials.* Within two working days of the receipt of an application, the department shall determine whether the submittal is complete. Incomplete submittals shall be returned to the applicant with the deficiencies noted in writing.

(2) *Initiation of development review.* Once a completed application is submitted, it shall be scheduled for the next staff development review committee (SDRC) meeting, but no earlier than one week from the date that the application is deemed complete. Within seven days of a complete application being submitted, written notice will be provided with the timeframe for approval of the development plan. ~~The administrative official may waive the required SDRC meeting for certain development applications based on the size and scope of the proposed development.~~

(3) The administrative official may waive the required SDRC meeting for certain development applications based on the size and scope of the proposed development.

[Subsections (d) thru (h) remain unchanged]

[No changes to the remainder of Chapter 3]

SECTION 2. The City Council of the City of Port Orange hereby amends Chapter 5, of the Land Development Code, to read as follows:

[No changes to Sections 1 thru 6]

Section 7: Subdivision plat and development plans review.

Approval of subdivision plats and development plans is outlined in chapter 3, article I, section 3 of this code. Approval of the final plat and development plans results in the issuance of a development order.

(a) *Subdivision plat and development plan exhibits*. The following information and documentation shall be shown on or enclosed with the subdivision plat and development plans submitted for review. The subdivision plat and development plans shall be drawn at a scale of no smaller than one inch equal to 100 feet.

(1) The final plat drawing(s), drafted in compliance with F.S. ch. 177, and including certificates of approval for signature by the ~~mayor~~ designated administrative official and attestation by the city clerk.

[No changes to the remainder of subsection (a) and all of subsection (b)]

SECTION 3. All ordinances or parts of ordinances in conflict with the provisions of this ordinance are hereby repealed to the extent of such conflict.

SECTION 4. Scrivener's Errors. Typographical errors and other matters of a similar nature that do not affect the intent of this Ordinance, as determined by the City Clerk and City Attorney, may be corrected.

SECTION 5. The provisions of this Ordinance shall become and be made a part of the Land Development Code of the City of Port Orange, and the Sections of this Ordinance may be renumbered or re-lettered to accomplish such intention. The Code codifier is granted liberal authority to codify the provisions of this Ordinance.

SECTION 6. If any provision of this ordinance or the application thereof to any person or circumstance is held invalid, the invalidity shall not affect other provisions or applications of the ordinance which can be given effect without the invalid provision or application, and to this end the provisions of this ordinance are declared severable.

SECTION 7. This Ordinance shall take effect immediately upon adoption.

_____
MAYOR SCOTT STILTNER

ATTEST:

_____
Robin L. Fenwick, MMC, City Clerk

Passed on first reading on the day of

Passed and adopted on second and final reading on the day of

Reviewed and Approved: _____
Shannon K. Balmer, Senior Assistant City Attorney

Print Form

Business Impact Estimate

This form should be included in the agenda packet for the item under which the proposed ordinance is to be considered and must be posted on the City's website by the time notice of the proposed ordinance is published.

Proposed ordinance's title/reference:
Ordinance No. 2025-23 - Land Development Code (LDC) Amendment/ Chapter 3 Administration and Chapter 5 Subdivisions – Approval Process for a Subdivision Plat or Replat According to Senate Bill 784

This Business Impact Estimate is provided in accordance with Section 166.041(4), Florida Statutes. If one or more boxes are checked below, this means the City is of the view that a business impact estimate is **not** required by state law[1] for the proposed ordinance, but the City is implementing the procedure required by statutory law to ensure that no inadvertent procedural issue could impact the enactment of the proposed ordinance. This Business Impact Estimate may be revised following its initial posting.

- ☐ The proposed ordinance is required for compliance with Federal or State law or regulation;
- ☐ The proposed ordinance relates to the issuance or refinancing of debt;
- ☐ The proposed ordinance relates to the adoption of budgets or budget amendments, including revenue sources necessary to fund the budget;
- ☐ The proposed ordinance is required to implement a contract or an agreement, including, but not limited to, any Federal, State, local, or private grant, or other financial assistance accepted by the municipal government;
- ☐ The proposed ordinance is an emergency ordinance;
- ☐ The proposed ordinance relates to procurement; or
- ☑ The proposed ordinance is enacted to implement the following:
  a. Part II of Chapter 163, *Florida Statutes*, relating to growth policy, county and municipal planning, and land development regulation, including zoning, development orders, development agreements and development permits;
  b. Sections 190.005 and 190.046, *Florida Statutes*, regarding community development districts;
  c. Section 553.73, *Florida Statutes*, relating to the *Florida Building Code*; or
  d. Section 633.202, *Florida Statutes*, relating to the *Florida Fire Prevention Code*.

[1] See Section 166.041(4)(c), Florida Statutes.

In accordance with the provisions of controlling law, even notwithstanding the fact that, an exemption noted above may apply, the City hereby publishes the following information:

1. Summary of the proposed ordinance (must include statement of the public purpose, such as serving the public health, safety, morals, and welfare):
This proposed amendment to the LDC is to align the subdivision plat approval procedures with recent changes to Florida Statutes, effective July 1, 2025, following the enactment of Senate Bill 784 (SB?784)

2. An estimate of the direct economic impact of the proposed ordinance on private, for-profit businesses in the City, if any:

(a) An estimate of direct compliance costs that businesses may reasonably incur:

N/A

(b) Any new charge or fee imposed by the proposed ordinance or for which businesses will be financially responsible:

N/A

(c) An estimate of the City's regulatory costs, including estimated revenues from any new charges or fees to cover such costs:

N/A

3. Good faith estimate of the number of businesses likely to be impacted by the proposed ordinance:
N/A

4. Additional information the governing body deems useful[2] (if any):
N/A

[2] *You may wish to include in this section the methodology or data used to prepare the Business Impact Estimate. For example: City staff solicited comments from businesses in the City as to the potential impact of the proposed ordinance by contacting the local Chamber of Commerce, social media posting, direct mail or direct email, posting on City website, public workshop, etc. You may also wish to include efforts made to reduce the potential fiscal impact on businesses. You may also wish to state here that the proposed ordinance is a generally applicable ordinance that applies to all persons similarly situated (individuals as well as businesses) and, therefore, the proposed ordinance does not affect only businesses.*

ORDINANCE NO. 2025-24

AN ORDINANCE OF THE CITY OF PORT ORANGE, VOLUSIA COUNTY, FLORIDA AMENDING THE LAND DEVELOPMENT CODE CHAPTER 15 RELATING TO DIGITAL SIGNS AND STRING LIGHTING, AMENDING THE MESSAGE DISPLAY TIME; PROVIDING FOR REPEAL OF CONFLICTING ORDINANCES; PROVIDING FOR SEVERABILITY; AND PROVIDING AN EFFECTIVE DATE.

WHEREAS, the proposed amendments are necessary to improve the content of the existing Land Development Code ("Code") as part of an ongoing maintenance effort to make the Code more efficient in its application as well as updated to respond to the current conditions in the community; and

WHEREAS, the Planning Commission has recommended amendments to the Land Development Code; and

WHEREAS, for purposes of this ordinance words with underlined (underlined) type shall constitute additions to the original text and words with strikethrough (~~strikethrough~~) type shall constitute deletions from the original text.

NOW, THEREFORE, BE IT ENACTED BY THE CITY COUNCIL OF THE CITY OF PORT ORANGE, VOLUSIA COUNTY, FLORIDA:

SECTION 1: The City Council of the City of Port Orange hereby amends Chapter 15, of the Land Development Code, to read as follows:

Chapter 15 - SIGNS

Section 9: - Digital Signs and String Lighting.

(a) *Digital signs.* Digital signs are subject to the following standards:

Figure 15:13 Examples of digital signs



(1) The digital sign area of a monument sign shall be integrated into the design of the sign. The digital sign area shall not be an add-on feature onto the monument sign, but rather must be fully integrated into the sign design.

Figure 15:14 Examples of electronic message area integrated into a monument sign



Figure 15:15 Example of the digital sign area not being integrated into a monument sign



(2) Each message on the digital sign shall be displayed for at least ~~60~~ 10 seconds in duration. Message changes shall be completed instantaneously and shall be unnoticeable.

[No changes to the remainder of section 9]

SECTION 2: All ordinances or parts of ordinances in conflict with the provisions of this ordinance are hereby repealed to the extent of such conflict.

SECTION 3. Scrivener's Errors. Typographical errors and other matters of a similar nature that do not affect the intent of this Ordinance, as determined by the City Clerk and City Attorney, may be corrected.

SECTION 4. The provisions of this Ordinance shall become and be made a part of the Land Development Code of the City of Port Orange, and the Sections of this Ordinance may be renumbered or re-lettered to accomplish such intention. The Code codifier is granted liberal authority to codify the provisions of this Ordinance.

SECTION 5. If any provision of this ordinance or the application thereof to any person or circumstance is held invalid, the invalidity shall not affect other provisions or applications of the ordinance which can be given effect without the invalid provision or application, and to this end the provisions of this ordinance are declared severable.

SECTION 6. This Ordinance shall take effect immediately upon adoption.

_____
MAYOR SCOTT STILTNER

ATTEST:

_____
Robin L. Fenwick, MMC, City Clerk

Passed on first reading on the day of

Passed and adopted on second and final reading on the day of

Reviewed and Approved: _____
Shannon K. Balmer, Senior Assistant City Attorney

Print Form

Business Impact Estimate

This form should be included in the agenda packet for the item under which the proposed ordinance is to be considered and must be posted on the City's website by the time notice of the proposed ordinance is published.

Proposed ordinance's title/reference:
Ordinance No. 2025-24 - Land Development Code (LDC) Amendment/Chapter 15 Signs - Electronic Message Center Minimum Message Displayed Time

This Business Impact Estimate is provided in accordance with Section 166.041(4), Florida Statutes. If one or more boxes are checked below, this means the City is of the view that a business impact estimate is **not** required by state law[1] for the proposed ordinance, but the City is implementing the procedure required by statutory law to ensure that no inadvertent procedural issue could impact the enactment of the proposed ordinance. This Business Impact Estimate may be revised following its initial posting.

- ☐ The proposed ordinance is required for compliance with Federal or State law or regulation;
- ☐ The proposed ordinance relates to the issuance or refinancing of debt;
- ☐ The proposed ordinance relates to the adoption of budgets or budget amendments, including revenue sources necessary to fund the budget;
- ☐ The proposed ordinance is required to implement a contract or an agreement, including, but not limited to, any Federal, State, local, or private grant, or other financial assistance accepted by the municipal government;
- ☐ The proposed ordinance is an emergency ordinance;
- ☐ The proposed ordinance relates to procurement; or
- ☑ The proposed ordinance is enacted to implement the following:
  a. Part II of Chapter 163, *Florida Statutes*, relating to growth policy, county and municipal planning, and land development regulation, including zoning, development orders, development agreements and development permits;
  b. Sections 190.005 and 190.046, *Florida Statutes*, regarding community development districts;
  c. Section 553.73, *Florida Statutes*, relating to the *Florida Building Code*; or
  d. Section 633.202, *Florida Statutes*, relating to the *Florida Fire Prevention Code*.

[1] See Section 166.041(4)(c), Florida Statutes.

In accordance with the provisions of controlling law, even notwithstanding the fact that, an exemption noted above may apply, the City hereby publishes the following information:

1. Summary of the proposed ordinance (must include statement of the public purpose, such as serving the public health, safety, morals, and welfare):
The proposed amendment would establish a minimum message display time for an electronic message sign of 10 seconds. This change provides greater flexibility in message rotation, allowing businesses to advertise or communicate more effectively while maintaining safeguards in the LDC, such as prohibiting rapid flashing or distracting animations that could impact traffic safety or alter the visual character of surrounding neighborhoods.

2. An estimate of the direct economic impact of the proposed ordinance on private, for-profit businesses in the City, if any:

(a) An estimate of direct compliance costs that businesses may reasonably incur:

N/A

(b) Any new charge or fee imposed by the proposed ordinance or for which businesses will be financially responsible:

N/A

(c) An estimate of the City's regulatory costs, including estimated revenues from any new charges or fees to cover such costs:

N/A

3. Good faith estimate of the number of businesses likely to be impacted by the proposed ordinance:
N/A

4. Additional information the governing body deems useful[2] (if any):
N/A

[2] *You may wish to include in this section the methodology or data used to prepare the Business Impact Estimate. For example: City staff solicited comments from businesses in the City as to the potential impact of the proposed ordinance by contacting the local Chamber of Commerce, social media posting, direct mail or direct email, posting on City website, public workshop, etc. You may also wish to include efforts made to reduce the potential fiscal impact on businesses. You may also wish to state here that the proposed ordinance is a generally applicable ordinance that applies to all persons similarly situated (individuals as well as businesses) and, therefore, the proposed ordinance does not affect only businesses.*

ORDINANCE NO. 2025-25

AN ORDINANCE OF THE CITY OF PORT ORANGE, VOLUSIA COUNTY, FLORIDA AMENDING THE LAND DEVELOPMENT CODE CHAPTER 16 RELATING TO SPECIAL SETBACKS FOR ELEVATED WOOD DECKS,; PROVIDING FOR REPEAL OF CONFLICTING ORDINANCES; PROVIDING FOR SEVERABILITY; AND PROVIDING AN EFFECTIVE DATE.

WHEREAS, the proposed amendments are necessary to improve the content of the existing Land Development Code ("Code") as part of an ongoing maintenance effort to make the Code more efficient in its application as well as updated to respond to the current conditions in the community; and

WHEREAS, the Planning Commission has recommended amendments to the Land Development Code; and

WHEREAS, for purposes of this ordinance words with underlined (underlined) type shall constitute additions to the original text and words with strikethrough (~~strikethrough~~) type shall constitute deletions from the original text.

NOW, THEREFORE, BE IT ENACTED BY THE CITY COUNCIL OF THE CITY OF PORT ORANGE, VOLUSIA COUNTY, FLORIDA:

SECTION 1: The City Council of the City of Port Orange hereby amends Chapter 16, of the Land Development Code, to read as follows:

Chapter 16 – MISCELLANEOUS REULATIONS

Section 5: - Special setbacks.

[No changes to subsection (a)]

(b) *Special setbacks.*

Structure or Building Feature		Special Setback
Air conditioning unit		3.5 feet into yard (1)
Antenna, dish (2), (3), (7)		10 feet from property line
Awning		3 feet into yard (1)
Balcony, open three sides		5 feet into yard (1)
Barbecue pit, residential (2)		10 feet from property line
Boat dock/boathouse		Refer to chapter 9, article III, shoreline protection regulations
Canopy, commercial (3):		
	Bank drive-through	5 feet from side property line
	Gasoline pump island	5 feet from side property line
	Other	5 feet from side property line
Carport, residential (attached or freestanding) (3)		15 feet from rear property line 5 feet from side property line
Clothesline (5), (7)		5 feet from property line
Deck, wood (less than one foot above grade at property line) (2), (6)		5 feet from property line
Deck, wood (greater than one foot above grade at property line) (2), (3)		5 feet from property line, plus 2 feet for every 1 foot above grade <u>or the required rear and side-yard setback of the principal structure, whichever is less.</u>
Driveway, residential A		5 feet from property line
	Expansion of existing drive with pervious and nonpermanent surface	2.5 feet from property line
Fireplace and chimney (2)		3 feet into yard
LP Fuel storage tank (2), (7), (8):		
	Residential zones	Refer to NFPA 37 requirements, as may be amended
Gazebo		7.5 feet into yard or the required side-yard setback of principal structure, whichever is less (2)
Generators (stationary emergency) (1), (8)		Refer to NFPA 58 requirements, as may be amended
Outdoor play equipment (7)		7.5 feet from rear property line
Overhang		3 feet into yard (1)
Patio, at grade (2)		5 feet from property line
Pergola		7.5 feet into yard or the required side-yard setback of principal structure, whichever is less (2); 3 feet into front yard if attached to principal structure
Pool, swimming (2)		8 feet from property line (4)
Porch:		
	Entry (less than 12 square feet)	3 feet into front or rear yard
	Covered, open three sides	15 feet from rear property line
Rain barrel (2), (7), (8)		3.5 feet into yard
Screen room, residential (roof, open three sides or open two sides if dwelling is not parallel to rear lot line)		15 feet from rear property line

Screen pool enclosure (2)		5 feet from property line
Sill, window		1 foot into yard
Storage building (2), (7):		
	Residential uses (120 square feet or less)	5 feet from property line
	Residential uses (121 to 250 square feet)	10 feet from rear property line; 10 feet from side property line or the required side-yard setback of principal structure, whichever is less
	Residential uses (251 square feet up to < square footage of the principal structure)	Same setback requirement as the principal structure
	Nonresidential uses (250 square feet or less)	10 feet from property line
Tennis court, residential (2)		10 feet from property line
Treehouse (2)		1 foot for every 1 foot above grade, minimum 7.5 feet
Window, bay (3)		3 feet into yard (1)
Wingwalls		3 feet into yard (1)

NOTES:

(1) In no case shall the special setback exceed 50 percent of the minimum yard dimension.

(2) Location within required yards permitted in rear and side yards only.

(3) Setback shall be measured from the leading vertical edge of the structure. Where the structure is movable, creating an adjustable vertical edge, the setback dimension shall be measured from the greatest possible vertical edge.

(4) Structures elevated and attached to the top of aboveground pools shall be set back in accordance with the special setback provisions established for decks in this section.

(5) Location within required yards permitted in rear yards only. Structures may be allowed in side yards provided they are screened from public view by an opaque fence.

(6) Location within the side corner yard is allowed, provided that the deck is screened by an opaque fence.

(7) Location within the required rear yard is prohibited on an atypical lot if structure is greater than four feet in height.

(8) Structure shall be screened from rights-of-way and adjacent properties using architectural features, opaque fencing or walls, consistent with the surrounding primary structures, or landscaping of sufficient density and maturity at planting to provide opaque screening. For generators and LP fuel storage tanks, there shall be a three-foot clearance area in front of the service panel, if applicable, for maintenance. For rain barrels, screening shall not be required if the structure is decorative in nature, or if its color is light or dark brown, dark green, or black, or painted light or dark brown, dark green, black, or consistent with that of the primary structure.

SECTION 2: All ordinances or parts of ordinances in conflict with the provisions of this ordinance are hereby repealed to the extent of such conflict.

SECTION 3. Scrivener's Errors. Typographical errors and other matters of a similar nature that do not affect the intent of this Ordinance, as determined by the City Clerk and City Attorney, may be corrected.

SECTION 4. The provisions of this Ordinance shall become and be made a part of the Land Development Code of the City of Port Orange, and the Sections of this Ordinance may be renumbered or re-lettered to accomplish such intention. The Code codifier is granted liberal authority to codify the provisions of this Ordinance.

SECTION 5. If any provision of this ordinance or the application thereof to any person or circumstance is held invalid, the invalidity shall not affect other provisions or applications of the ordinance which can be given effect without the invalid provision or application, and to this end the provisions of this ordinance are declared severable.

SECTION 6. This Ordinance shall take effect immediately upon adoption.

_____
MAYOR SCOTT STILTNER

ATTEST:

_____
Robin L. Fenwick, MMC, City Clerk

Passed on first reading on the day of

Passed and adopted on second and final reading on the day of

Reviewed and Approved: _____
Shannon K. Balmer, Senior Assistant City Attorney

Print Form

Business Impact Estimate

This form should be included in the agenda packet for the item under which the proposed ordinance is to be considered and must be posted on the City's website by the time notice of the proposed ordinance is published.

Proposed ordinance's title/reference:
Ordinance No. 2025-25 - Land Development Code (LDC) Amendment/Chapter 16 – Miscellaneous Regulations – Setbacks for an Elevated Wood Deck

This Business Impact Estimate is provided in accordance with Section 166.041(4), Florida Statutes. If one or more boxes are checked below, this means the City is of the view that a business impact estimate is **not** required by state law[1] for the proposed ordinance, but the City is implementing the procedure required by statutory law to ensure that no inadvertent procedural issue could impact the enactment of the proposed ordinance. This Business Impact Estimate may be revised following its initial posting.

- ☐ The proposed ordinance is required for compliance with Federal or State law or regulation;
- ☐ The proposed ordinance relates to the issuance or refinancing of debt;
- ☐ The proposed ordinance relates to the adoption of budgets or budget amendments, including revenue sources necessary to fund the budget;
- ☐ The proposed ordinance is required to implement a contract or an agreement, including, but not limited to, any Federal, State, local, or private grant, or other financial assistance accepted by the municipal government;
- ☐ The proposed ordinance is an emergency ordinance;
- ☐ The proposed ordinance relates to procurement; or
- ☑ The proposed ordinance is enacted to implement the following:
  a. Part II of Chapter 163, *Florida Statutes*, relating to growth policy, county and municipal planning, and land development regulation, including zoning, development orders, development agreements and development permits;
  b. Sections 190.005 and 190.046, *Florida Statutes*, regarding community development districts;
  c. Section 553.73, *Florida Statutes*, relating to the *Florida Building Code*; or
  d. Section 633.202, *Florida Statutes*, relating to the *Florida Fire Prevention Code*.

[1] See Section 166.041(4)(c), Florida Statutes.

In accordance with the provisions of controlling law, even notwithstanding the fact that, an exemption noted above may apply, the City hereby publishes the following information:

1. Summary of the proposed ordinance (must include statement of the public purpose, such as serving the public health, safety, morals, and welfare):

The LDC provides the setbacks for various types of accessory structures, including sheds, carports, pools, pool enclosures, concrete or paver patios, and elevated decks. For most of these accessory structures, the side and rear setbacks typically range between 5 feet to 10 feet. However, for an elevated wood deck, the required side and rear setbacks are determined by the height of the deck, using the following formula: 5 feet + 2 feet for every 1 foot above grade.

2. An estimate of the direct economic impact of the proposed ordinance on private, for-profit businesses in the City, if any:

(a) An estimate of direct compliance costs that businesses may reasonably incur:

N/A

(b) Any new charge or fee imposed by the proposed ordinance or for which businesses will be financially responsible:

N/A

(c) An estimate of the City's regulatory costs, including estimated revenues from any new charges or fees to cover such costs:

N/A

3. Good faith estimate of the number of businesses likely to be impacted by the proposed ordinance:

Proposed amendment applies to residienal properties.

4. Additional information the governing body deems useful[2] (if any):

N/A

[2] *You may wish to include in this section the methodology or data used to prepare the Business Impact Estimate. For example: City staff solicited comments from businesses in the City as to the potential impact of the proposed ordinance by contacting the local Chamber of Commerce, social media posting, direct mail or direct email, posting on City website, public workshop, etc. You may also wish to include efforts made to reduce the potential fiscal impact on businesses. You may also wish to state here that the proposed ordinance is a generally applicable ordinance that applies to all persons similarly situated (individuals as well as businesses) and, therefore, the proposed ordinance does not affect only businesses.*

CITY COUNCIL AGENDA ITEM

COUNCIL MEETING DATE 8/19/2025

SUBJECT: (H18) Fund Balance Policy Discussion

DEPARTMENT: City Manager

GOAL: 5 - Fiscal Sustainability

RECOMMENDED MOTION: Provide direction on the Fund Balance Policy.

SUMMARY: At their August 5 meeting, Council asked staff to prepare an agenda item to discuss the General Fund reserve (fund balance) policy.

Adopted in 2015, the policy requires 30–35% of annual operating expenditures (including transfers) in reserve. Currently, this equals about $20–24 million (based on a $67M operating budget including transfers).

The Government Finance Officers Association (GFOA) recommends two months of operating expenses (2/12 = 16.7%) but does not include transfers in the calculation.

Staff reviewed the ACFRs of the larger cities in Volusia County and the undesignated fund balances ranged from about $10M to almost $40M with percentages from about 25%-75%. Two cities include a specific amount set aside for emergencies such as hurricanes.

Regional Comparisons
Undesignated Fund Balance/Hurricane Funds*

City	Amount	General Fund Operating Budget	Est. % of General Fund Operating
Daytona Beach	$37.5M	$115,191,231	33%
Deland	$8.8M $3.2M (Hurricane specific) $12M	$38,594,571	23% Unassigned 31% Total
Deltona	$26.5M $10.5M (Hurricane specific) $36.5M	$49,278,443	53% Unassigned 74% Total
New Smyrna Beach	$18.2M	$41,575,069	44%
Ormond Beach	$9.9M	$44,098,200	23%

*Source - Annual Comprehensive Financial Report (ACFR) for each City. Information is based on a general review; some details in the ACFRs may not have been identified during this review.

FUND BALANCE OPTIONS

To facilitate discussion on the preferred fund balance amount, Staff has provided several fund balance options for consideration.

Port Orange Fund Balance Options (amounts rounded)

% of General Fund Operating	Amount**
16.7% (GFOA)	$11.2M
20%	$13.4M
22%	$14.7M
25%	$16.75M
27%	$18.1M
30%	$20.1M
35%	$23.45M

**Based on approximately $67M General Fund Operating Budget

Additional One-Time Funds Available for Projects

- $4.02M – Sale of Allen Green Center
- $0.6M – FEMA reimbursement from Hurricane Irma

Investment Options for Fund Balance

Below are some of the currently unfunded capital projects that Council could elect to invest in if the fund balance is lowered. The discussion on these projects can be held early in the next fiscal year after the current fiscal year fund balance roll forward is known and can be added to the existing reserves.

Capital Projects for Future Investment:

• Down Under Infrastructure Phase	$2.75M
• Down Under Features Phase	$1.25M
• Minimum City Stormwater Project Match	$7.0M
• Playground Replacements	$1.2M
• All Children's Park Restroom	$636K
• Dorothy Hukill Annex Generator	$1.1M
• Dorothy Hukill Annex HVAC	$600K
• Causeway Park Improvements (North)	$1.1M
• Additional funds for sidewalk repairs, paving, &/or striping	TBD

PRESENTER: Wayne Clark, Linda Truitt

ATTACHMENTS:

Amanda Bonin	Created/Initiated - 08/07/2025
Linda Truitt	Approved - 08/08/2025
Robin Fenwick	Approved - 08/11/2025
Wayne Clark	Final Approval - 08/14/2025