REGULAR CITY COUNCIL MEETING

6:30 PM – COUNCIL CHAMBERS – CITY HALL

MARCH 18, 2025

AGENDA

ALL CITIZENS DESIRING TO ADDRESS THE PORT ORANGE CITY COUNCIL DURING PUBLIC PARTICIPATION SHOULD COMPLETE THE SPEAKER CARD WHICH IS LOCATED ON THE STANDS OUTSIDE COUNCIL CHAMBERS. AFTER COMPLETING THE SPEAKER CARD, PRESENT IT TO THE CLERK.

A. OPENING

1. Invocation by Father Matt Mello of Our Lady of Hope Catholic Church
2. Pledge of Allegiance
3. Roll Call
4. Public Comments on Consent Agenda Items Only

B. TOWN CENTER CRA REGULAR MEETING

C. EASTPORT BUSINESS CENTER CRA REGULAR MEETING

D. CONSENT AGENDA

5. Approval of Minutes
    a. March 4, 2025 - Regular City Council Meeting
6. Bid Awards and Contract Items
    a. Approval to Award ITB #25-01 to RCM Utilities, Inc. for the Lowes Gateway Lift Station Rehabilitation Project
    b. Approval to Award ITB #25-02 for the Construction of the Forestry Building to SA Casey Construction, Inc.
    c. Approval of Task Authorization No. 21 - with Kimley Horn & Associates, Inc. for Construction Phase Services for ITB #25-02 - Lowes Gateway Lift Station Rehabilitation
    d. Approval of Task Authorization No. 22 with Kimley-Horn & Associates, Inc. for the Sugar Forest Stormwater Pump Station, Collection System, and Force Main

e. Approval of Task Authorization No. 4 with Danus Utilities, Inc. for Sanitary Sewer Manhole Rehabilitation under the Standard Contract for Services pursuant to ITB #23-07

f. Approval of the First Amendment to the Second Addendum to the Third Amendment and Restatement of Lease Agreement with Palmer College Foundation, Inc. for Allen Green Center

g. Approval of Change Order No. 1 to AIA Agreement with Paul Culver Construction, Inc. for the Police Department HVAC Renovations

h. Approval of Change Order No. 2 to EJCDC Agreement for ITB #22-07 with Chinchor Electric, Inc. relating to the Water Treatment Plant Generator Replacement

7. Resolution No. 25-13 - Approval of the Application for a Florida Inland Navigation District (FIND) Waterways Assistance Program Grant for the Construction of a Day Dock at Riverwalk Park
8. Resolution No. 25-17 - Approval of Florida Division of Emergency Management Subrecipient Agreement for Hurricane Milton
9. Resolution No. 25-18 - Waiver of Building Permit Fees to bring a Substantially Damaged Structure into Compliance.
10. Resolution No. 25-20 - Budget Resolution for the Police Highwater Vehicle
11. Approval to submit the proposed project for the Volusia-Flagler TPO 2025 Transportation Improvement Program Priority List
12. Approval of Economic Incentive Agreement with Commons 4075 LLC (Catfish Commons - 4075 Ridgewood Avenue)

E. PUBLIC PARTICIPATION (Non-Agenda – 20 minutes)

F. COMMENTS AND ADDITIONAL ITEMS

13. Council Members
14. City Attorney
15. City Manager

G. BOARD APPOINTMENTS, INTERVIEWS, AND REPORTS

16. Citizen Advisory Committee for TPO

H. PUBLIC HEARING

17. First Reading - Ordinance No. 2025-09 - Comprehensive Plan Future Land Use Map Amendment/4009 & 4084 Halifax Drive (Case No. CPAM-24-0003)

18. First Reading - Ordinance No. 2025-10 - Second Restated Master Development Agreement Catfish Commons Planned Commercial Development (Case No. PRZA-24-0008)
19. First Reading - Ordinance No. 2025-11 - First Amendment to the Summer Trees Plaza PCD Master Development Agreement (Case No. PRZA-25-0001)
20. Approval of the Shoppes at Summer Trees Plat (Case No. SUBD-24-0001)

I. REGULAR AGENDA

21. Direction on the Addition of Fluoride to the City's Water Supply

J. COUNCIL COMMITTEE REPORTS

22. City Council Committee Reports
    a. First Step Shelter - Councilman Shawn Goepfert
    b. Port Orange/South Daytona Chamber of Commerce - Councilman Shawn Goepfert
    c. Arthaus - Vice Mayor Tracy Grubbs
    d. Roundtable of Elected Officials - Mayor Scott Stiltner

K. ADJOURNMENT

NOTICES – PURSUANT TO SECTION 286.0105 OF THE FLORIDA STATUTES, IF ANY PERSON DECIDES TO APPEAL ANY DECISION MADE BY THE CITY COUNCIL WITH RESPECT TO ANY MATTER CONSIDERED AT THIS PUBLIC MEETING OR HEARING, SUCH PERSON WILL NEED A RECORD OF THE PROCEEDINGS, AND THAT, FOR SUCH PURPOSE, SUCH PERSON MAY NEED TO ENSURE THAT A VERBATIM RECORD OF THE PROCEEDINGS IS MADE, WHICH RECORD INCLUDES THE TESTIMONY AND EVIDENCE UPON WHICH THE APPEAL IS TO BE BASED. THE CITY DOES NOT PREPARE OR PROVIDE SUCH A RECORD.

FOR SPECIAL ACCOMMODATIONS, PLEASE NOTIFY THE CITY CLERK'S OFFICE (PHONE: 386-506-5563) AS FAR IN ADVANCE AS POSSIBLE, BUT PREFERABLY WITHIN 2 WORKING DAYS OF YOUR RECEIPT OF THIS NOTICE OR 5 DAYS PRIOR TO THE MEETING OR HEARING DATE.

HELP FOR THE HEARING IMPAIRED IS AVAILABLE THROUGH THE ASSISTIVE LISTENING SYSTEM RECEIVERS CAN BE OBTAINED FROM THE CITY CLERKS' OFFICE.

IN ACCORDANCE WITH THE AMERICANS WITH DISABILITIES ACT (ADA), IF YOU ARE A PERSON WITH A DISABILITY WHO NEEDS AN ACCOMMODATION IN ORDER TO PARTICIPATE IN THIS PROCEEDING, YOU ARE ENTITLED, AT NO COST TO YOU, THE PROVISION OF CERTAIN ASSISTANCE. PLEASE CONTACT THE CITY CLERK FOR THE CITY OF PORT ORANGE, 1000 CITY CENTER CIRCLE, PORT ORANGE, FLORIDA 32129, TELEPHONE NUMBER 386-506-5563, CITYCLERK@PORT-ORANGE.ORG, AS FAR IN ADVANCE AS POSSIBLE, BUT PREFERABLY WITHIN 2 WORKING DAYS OF YOUR RECEIPT OF THIS NOTICE OR 5 DAYS PRIOR TO THE MEETING OR HEARING DATE. IF YOU ARE HEARING OR VOICE IMPAIRED, CONTACT THE RELAY OPERATOR AT 7-1-1 or 1-800-955-8771.

UPON REQUEST BY A QUALIFIED INDIVIDUAL WITH A DISABILITY, THIS DOCUMENT WILL BE MADE AVAILABLE IN AN ALTERNATE FORMAT. IF YOU NEED TO REQUEST THIS DOCUMENT IN AN ALTERNATE FORMAT, PLEASE CONTACT THE CITY CLERK WHOSE CONTACT INFORMATION IS PROVIDED ABOVE.

ANY INVOCATION THAT IS OFFERED BEFORE THE OFFICIAL START OF THE CITY COUNCIL MEETING SHALL BE THE VOLUNTARY OFFERING OF A PRIVATE PERSON, TO AND FOR THE BENEFIT OF THE CITY COUNCIL. THE VIEWS OR BELIEFS EXPRESSED BY THE INVOCATION SPEAKER HAVE NOT BEEN PREVIOUSLY REVIEWED OR APPROVED BY THE CITY COUNCIL OR THE CITY STAFF, AND THE CITY IS NOT ALLOWED BY LAW TO

ENDORSE THE RELIGIOUS BELIEFS OR VIEWS OF THIS, OR ANY OTHER SPEAKER. PERSONS IN ATTENDANCE AT THE CITY COUNCIL MEETING ARE INVITED TO STAND DURING THE OPENING INVOCATION AND PLEDGE OF ALLEGIANCE. HOWEVER, SUCH INVITATION SHALL NOT BE CONSTRUED AS A DEMAND, ORDER, OR ANY OTHER TYPE OF COMMAND. NO PERSON IN ATTENDANCE AT THE MEETING SHALL BE REQUIRED TO PARTICIPATE IN ANY OPENING INVOCATION THAT IS OFFERED. A PERSON MAY EXIT THE CITY COUNCIL CHAMBERS AND RETURN UPON COMPLETION OF THE OPENING INVOCATION IF A PERSON DOES NOT WISH TO PARTICIPATE IN OR WITNESS THE OPENING INVOCATION.

REGULAR CITY COUNCIL MEETING MINUTES
COUNCIL CHAMBERS – CITY HALL
1000 CITY CENTER CIRCLE
PORT ORANGE, FLORIDA
MARCH 4, 2025

THE REGULAR CITY COUNCIL MEETING of the City of Port Orange was called to order by Mayor Scott Stiltner at 6:30 p.m.

Silent Invocation

Pledge of Allegiance

Roll Call	Present:	Councilman Jonathan Foley Councilman Shawn Goepfert Councilman Lance Green Vice Mayor Tracy Grubbs Mayor Scott Stiltner
	Also Present:	City Manager Wayne Clark City Attorney Matthew Jones Deputy City Clerk Amanda Bonin

4. Public Comments on Consent Agenda Items Only

Robert Reinhagen, resident, expressed his concerns regarding the conservation area in Resolution No. 25-15 as well as an access agreement.

CONSENT AGENDA

5. Approval of Minutes
   a. February 18, 2025 - Regular City Council Meeting
6. Bid Awards and Contract Items
   a. Approval of Task Authorization No. 3 with Danus Utilities, Inc. for Sanitary Sewer Manhole Rehabilitation under the Standard Contract for Services pursuant to ITB #23-07
   b. Approval of Change Order No. 1 to Task Authorization No. 8 with Mead and Hunt, Inc. under the Master Contract for Professional Engineering Services (RFSQ #21-03) related to the Water Reclamation Facility (WRF) Filter Resiliency Emergency Power Upgrade Project
7. Resolution No. 25-01 - Supplemental Agreement to Florida Department of Transportation (FDOT) Contract for maintenance on the State Rights-of-Way
8. Resolution No. 25-14 - Approval of Non-Vehicular Access Easement Vacation - portion of Lots 70, 126, 127, 132, and 146 of Madeline Commons Subdivision
9. Resolution No. 25-15 - Approval of a Tree Conservation Easement Vacation - Madeline Commons Subdivision Plat
10. Resolution No. 25-16 - Approve Grant Award from Daytona Beach Racing & Recreational Facilities District

Motion to approve the Consent Agenda as presented was made by Councilman Jonathan Foley and Seconded by Councilman Shawn Goepfert. Motion carried unanimously by roll call vote.

PUBLIC PARTICIPATION (Non-Agenda – 20 minutes)

Peter Arnold on behalf of the Port Orange/South Daytona Chamber of Commerce, expressed their appreciation for the continuing support they received from the City of Port Orange and talked about upcoming events.

Sarah Hayes, resident, brought attention to the crosswalk and speeding issues in the Cross Creek area, and requested safety devices to slow down drivers.

Lisa Tighe, resident, expressed her thoughts and concerns regarding flooding and a code violation she received.

Alysha DeFusco, resident, expressed her concerns regarding flooding and the construction of Madeline Commons.

Shirley Rice, resident, inquired about the status of a pond, the results of the Special Flood Hazard meeting with a FEMA representative, flood prevention for Sugar Mill Elementary, and repairs needed along Herbert Street by Silver Sands Middle School.

COMMENTS AND ADDITIONAL ITEMS

11. Council Members

Councilman Lance Green expressed his apologies to the citizens of Port Orange, his family, City staff and the Police Department for a matter that occurred a few months ago.

In follow-up to some questions asked during public participation, Mayor Scott Stiltner commented that the City had previously hired Kimley Horn to do an extensive study in an effort to address stormwater concerns. The study has been completed and on March 25, 2025, there will be a public workshop at 5:30 p.m. in the City Council Chambers to go over projects that will be moving forward and encourage residents to attend.

Council members and City staff will be in Tallahassee next week to advocate for state funding. Mayor Stiltner suggested a link on the City's website for residents to easily find stormwater updates that includes a FAQ section, and he thanked the Port Orange/South Daytona Chamber of Commerce for hosting the Heroes Dinner recognizing public safety, to include the Firefighter and Police Officer of the Year.

Council members spoke on the topic of flooding, substantial damage letters, the stormwater master plan, and the speeding concerns raised in tonight's public participation section.

Councilman Jonathan Foley clarified that the money the City receives for the Park Bond can only be utilized for the Parks. FDOT reached out to let him know that Nova Road is being designed to be repaved. They are expecting the design to be completed between now and fall of 2026. Councilman Foley also commented on Port Orange University which starts on March 10, 2025, and encouraged residents to get involved.

Vice Mayor Tracy Grubbs talked about a grant the City received from the Turkey Rod Run for the All Children's Park, Atlantic High School's Law and Government Day that the City participated in, and talked about concerns involving electric bikes.

Vice Mayor Grubbs also brought up the fluoride item that will be discussed at the Council meeting on March 18, 2025, and shared a brochure with fellow Council members that the Florida Department of Health has on the topic of fluoride.

Mayor Scott Stiltner commented on speed bumps and how the City's code doesn't permit them, but it does permit traffic-calming devices such as speed humps and suggested doing a study.

12. City Attorney

There was nothing further.

13. City Manager

City Manager, Wayne Clark, indicated the concerns regarding speeding/traffic issues in Cross Creek have been given to the Police Department. The City will be completing another traffic study and will be looking for both short and long-term solutions. He further touched on a few of the stormwater projects and clarified that the workshop on March 25, 2025, will be an overview of nine stormwater projects. Following that workshop, individual meetings for each area will be set up to best accommodate everyone that has been impacted.

City Council called the Joint Annual Meeting of the Members of the Corporation and of the Board of Directors to order at 7:29 p.m., minutes of which are under separate cover.

ANNUAL CORPORATE MEETING

14. Port Orange Property Development, Inc. Joint Annual Meeting of the Members of the Corporation and of the Board of Directors

The Annual Corporate meeting adjourned at 7:32 p.m. and Council reconvened to the regular City Council meeting.

SPECIAL REPORTS

15. Report from KemperSports on the Cypress Head Golf Course

Jeff Dayton with Kemper Sports provided a report on the Cypress Head Golf Course and talked about upcoming tournaments, a bunker project, and charity events.

Council Members expressed their appreciation for the job they do and keeping the course beautiful.

Councilman Jonathan Foley inquired about the range on a month-to-month, year-over-year basis.

Mr. Dayton mentioned they are possibly looking at a Teeing Ground Expansion in 2026 and talked about an artificial tee line at the rear of it so it can be utilized more at night.

Councilman Foley would like to see what it would cost to add this and mentioned other locations that have boosted revenue in doing so.

PUBLIC HEARING

16. Second Reading - Ordinance No. 2025-07 - Amending Chapter 74 - Utilities, Article VIII. Cross Connection Control of the City of Port Orange Code of Ordinances

Attorney Jones read Ordinance No. 2025-07 into the record.

ORDINANCE NO. 2025-07

AN ORDINANCE OF THE CITY OF PORT ORANGE, VOLUSIA COUNTY, FLORIDA, AMENDING CHAPTER 74, ARTICLE VIII, CROSS CONNECTION CONTROL, SECTION 74-241 TO UPDATE REFERENCES TO THE REVISED CROSS CONNECTION CONTROL MANUAL; AMENDING SECTION 74-242 TO UPDATE REFERENCES TO THE FLORIDA ADMINISTRATIVE CODE AND PROVIDING FOR THE IMMEDIATE DISCONNECTION OF PROHIBITED CROSS CONNECTIONS; AMENDING SECTION 74-243 TO UPDATE REFERENCES TO THE CURRENT VERSION OF THE AMERICAN WATER WORKS ASSOCIATION MANUAL; AMENDING SECTION 74-247 ADDING TO THE LIST OF CONDITIONS THAT REQUIRE CROSS CONTROL PROTECTIONS; AMENDING SECTIONS 74-248 AND 74-249 UPDATING REFERENCES TO THE REVISED CROSS CONNECTION CONTROL MANUAL ALONG WITH ESTABLISHING THE FREQUENCY OF MAINTENANCE, TESTING AND INSPECTIONS; AMENDING SECTION 74-252 UPDATING REFERENCES TO THE CROSS CONNECTION CONTROL ORDINANCE; PROVIDING FOR CODIFICATION; PROVIDING FOR REPEAL OF CONFLICTING ORDINANCES; PROVIDING FOR SEVERABILITY; AND PROVIDING AN EFFECTIVE DATE.

Motion to approve Ordinance No. 2025-07 was made by Councilman Lance Green and Seconded by Councilman Shawn Goepfert. Motion carried unanimously by roll call vote.

17. Second Reading - Ordinance No. 2025-08 - First Amendment to the Madeline Commons PUD Master Development Agreement (Case No. PRZA-24-0009)

Attorney Jones read Ordinance No. 2025-08 into the record.

ORDINANCE NO. 2025-08

AN ORDINANCE OF THE CITY OF PORT ORANGE, VOLUSIA COUNTY, FLORIDA, APPROVING THE FIRST AMENDMENT TO THE MADELINE COMMONS PLANNED UNIT DEVELOPMENT MASTER DEVELOPMENT AGREEMENT AS IT RELATES TO REMOVAL OF THE REQUIREMENT TO INSTALL A FENCE ADJACENT TO SUGAR MILL ELEMENTARY SCHOOL; PROVIDING FOR THE REPEAL OF CONFLICTING ORDINANCES; PROVIDING FOR SEVERABILITY OF; AND PROVIDING AN EFFECTIVE DATE.

Motion to approve Ordinance No. 2025-08 was made by Councilman Lance Green and Seconded by Councilman Jonathan Foley. Motion carried unanimously by roll call vote.

COUNCIL COMMITTEE REPORTS

18. City Council Committee Reports

a. Volusia Flagler TPO - Councilman Jonathan Foley

Councilman Jonathan Foley advised he was unable to attend the Volusia Flagler TPO and there was nothing to report.

b. Fire Pension Board - Councilman Jonathan Foley

Councilman Jonathan Foley advised the meeting had to be rescheduled due to there not being a quorum. A definitive date has not yet been reached.

c. Police Pension Board - Councilman Lance Green

Councilman Lance Green provided an update on the Police Pension Boards' recent meeting.

d. General Employee's Pension Board - Mayor Scott Stiltner

Mayor Scott Stiltner provided an update on the General Employee's Pension Board Meeting.

ADJOURNMENT - 7:48 p.m.

_____
Mayor Scott Stiltner

Attest:

_____
Robin Fenwick, MMC
City Clerk

CITY COUNCIL AGENDA ITEM

COUNCIL MEETING DATE 3/18/2025

SUBJECT: (D6a) Approval to Award ITB #25-01 to RCM Utilities, Inc. for the Lowes Gateway Lift Station Rehabilitation Project

DEPARTMENT: Engineering

GOAL: 2 - Infrastructure

RECOMMENDED MOTION: Move to award ITB # 25-01 to RCM Utilities, Inc. for the Lowes Gateway Lift Station (LS82) Rehabilitation Project in an amount not to exceed $749,975, and authorize the Mayor and City Clerk to execute all contract required documents.

SUMMARY: The Engineering Department is requesting Council approval to award ITB #25-01 Lowes/Gateway Lift Station Rehabilitation to RCM Utilities, LLC for the bid amount of $749,975.

The wastewater transmission system improvement project for the Lowes/Gateway Lift Station aims to upgrade the station's mechanical, electrical, and site components to ensure the continuous and efficient collection and transmission of wastewater. The lift station, constructed in 1999, has not undergone any upgrades since its initial construction. As a result, it is now part of a program to systematically update and upgrade the city's aging sanitary sewer lift stations.

The primary goal of this project is to enhance the reliability and functionality of the lift station to avoid disruptions in the wastewater collection and transmission process. By modernizing the station with new technology and equipment, the city can address potential issues that may arise due to aging infrastructure. Additionally, upgrading the lift station is a proactive approach to maintain the overall efficiency and effectiveness of the city's wastewater transmission system. The project will involve several stages, including design, permitting, and construction. Once completed, the upgraded lift station will contribute to the overall improvement of the city's wastewater infrastructure and promote a cleaner and healthier environment for the community.

On December 20, 2024, the Purchasing Manager received eight (8) sealed bid responses; two (2) deemed nonresponsive.

- RCM Utilities, LLC $749,975.00
- US Water Services Corp $809,788.00
- Clearwater Solutions, LLC $886,670.98
- Sanpik, Inc. $1,087,655.00

- Danus Utilities, Inc $1,081,854.00
- All State Civil Construction, Inc Non-Responsive
- G3 Contracting dba Industry Standards $1,021,720.00
- C&R Technical, LLC Non-Responsive

Staff has reviewed and recommends RCM Utilities, LLC as the best responsive bidder.

PRESENTER: Junos Reed

ATTACHMENTS:

1.	RCM Utilities, LLC EJCDC Agreement - ITB 25-01 Lowes Gateway Lift Station (LS82) Rehabilitation (ENTIRE AGREEMENT)	RCM Utilities, LLC EJCDC Agreement - ITB 25-01 Lowes Gateway Lift Station (LS82) Rehabilitation (ENTIRE AGREEMENT).pdf
2.	ITB 25-01 RCM Utilities, LLCsubmittal 12.20.2024	ITB 25-01 RCM Utilities, LLCsubmittal 12.20.2024.pdf
3.	ITB 25-01 signed affidavits_	ITB 25-01 signed affidavits_.pdf
4.	ITB 25-01 Bid Tabulation with Unit Prices FINAL(1.7.2025)	ITB 25-01 Bid Tabulation with Unit Prices FINAL(1.7.2025).pdf
5.	ITB 25-01 Notice of Intent to Award FINAL (1.8.2025)	ITB 25-01 Notice of Intent to Award FINAL (1.8.2025).pdf
6.	ITB 25-01 Lowes Gateway Lift Station (LS82) Rehabilitation FINAL(11.1.2024)	ITB 25-01 Lowes Gateway Lift Station (LS82) Rehabilitation FINAL(11.1.2024).pdf
7.	ITB 25-01 (Attachment 1) Schedule of Unit Pricing FINAL (11.1.2024)	ITB 25-01 (Attachment 1) Schedule of Unit Pricing FINAL (11.1.2024).pdf
8.	Attachment No.2 Lowes Gateway Lift Station Rehabilitation Technical Specifications_	Attachment No.2 Lowes Gateway Lift Station Rehabilitation Technical Specifications_.pdf
9.	Attachment No.3 Lowes Gateway Lift Station 100% Drawings	Attachment No.3 Lowes Gateway Lift Station 100% Drawings.pdf
10.	ITB 25-01 Addendum No.1 FINAL (12.6.2024)	ITB 25-01 Addendum No.1 FINAL (12.6.2024).pdf
11.	ITB 25-01 Addendum No.2 FINAL (12.12.2024)	ITB 25-01 Addendum No.2 FINAL (12.12.2024).pdf
12.	D3 DETAILS	D3 DETAILS.pdf
13.	ELECTRICAL	ELECTRICAL.pdf
14.	M1 LIFT STATION MECHANICAL PLAN	M1 LIFT STATION MECHANICAL PLAN.pdf

Julia Wiggins	Created/Initiated - 1/24/2025
Richard Colby	Approved - 1/24/2025
Junos Reed	Approved - 2/12/2025
Linda Truitt	Approved - 2/12/2025
Matthew Jones	Approved - 3/5/2025

AGREEMENT BETWEEN OWNER AND CONTRACTOR FOR CONSTRUCTION CONTRACT (STIPULATED PRICE)

This Agreement is by and between **City of Port Orange, 1000 City Center Circle, Port Orange, Florida 32129** ("Owner") and **RCM Utilities, LLC, 1451 Pine Grove Road, Eustis, Florida 32726** ("Contractor").

Terms used in this Agreement have the meanings stated in the General Conditions and the Supplementary Conditions.

Owner and Contractor hereby agree as follows:

ARTICLE 1—WORK

1.01 Contractor shall complete all Work as specified or indicated in the Contract Documents. The Work is generally described as follows:

Work consists of replacing existing dry pumps with two submersible pumps, pour concrete pads and driveway, install bypass piping, place gravel around the lift station, build new fencing, and replace sod. Concrete, soil, and gravel replacement at all disturbed areas.

ARTICLE 2—THE PROJECT

2.01 The Project, of which the Work under the Contract Documents is a part, is generally described as follows:

ITB 25-01 Lowes / Gateway Lift Station (LS82) Rehabilitation.

ARTICLE 3—ENGINEER

3.01 The part of the project that pertains to the Work has been designed by the Project Engineer, **Nicole E. McConnel, P.E.** ("Engineer") **of Kimley-Horn and Associates, Inc.,** and shall act as Owner's representative, assume all duties and responsibilities, and have the rights and authority assigned to Engineer in the Contract Documents in connection with the completion of the Work in accordance with the Contract Documents.

ARTICLE 4—CONTRACT TIMES

4.01 *Time is of the Essence*

A. All time limits for Milestones, if any, Substantial Completion, and completion and readiness for final payment as stated in the Contract Documents are of the essence of the Contract.

4.02 *Contract Times: Dates*

A. Deleted in its entirety.

4.03 *Contract Times: Days*

A. The Work will be substantially complete within **330** days after the date when the Contract Times commence to run as provided in Paragraph 4.01 of the General Conditions, and

Copyright© 2018 National Society of Professional Engineers, American Council of Engineering Companies, and American Society of Civil Engineers. All rights reserved.

completed and ready for final payment in accordance with Paragraph 15.06 of the General Conditions.

4.04 *Milestones* – Deleted in its entirety.

4.05 *Liquidated Damages*

A. Contractor and Owner recognize that time is of the essence as stated in Paragraph 4.01 above and that Owner will suffer financial and other losses if the Work is not completed and Milestones not achieved within the Contract Times, as duly modified. The parties also recognize the delays, expense, and difficulties involved in proving, in a legal or arbitration proceeding, the actual loss suffered by Owner if the Work is not completed on time. Accordingly, instead of requiring any such proof, Owner and Contractor agree that as liquidated damages for delay (but not as a penalty):

1. *Substantial Completion:* Contractor shall pay Owner $0.00 for each day that expires after the time (as duly adjusted pursuant to the Contract) specified above for Substantial Completion, until the Work is substantially complete.

2. *Completion of Remaining Work:* After Substantial Completion, if Contractor shall neglect, refuse, or fail to complete the remaining Work within the Contract Times (as duly adjusted pursuant to the Contract) for completion and readiness for final payment, Contractor shall pay Owner $0.00 for each day that expires after such time until the Work is completed and ready for final payment.

3. Deleted in its entirety.

B. If Owner recovers liquidated damages for a delay in completion by Contractor, then such liquidated damages are Owner's sole and exclusive remedy for such delay, and Owner is precluded from recovering any other damages, whether actual, direct, excess, or consequential, for such delay, except for special damages (if any) specified in this Agreement.

C. Deleted in its entirety.

4.06 *Special Damages* - Deleted in its entirety.

A. Deleted in its entirety.

B. Deleted in its entirety.

C. Deleted in its entirety.

ARTICLE 5—CONTRACT PRICE

5.01 Owner shall pay Contractor for completion of the Work in accordance with the Contract Documents, the amounts that follow, subject to adjustment under the Contract:

A. Deleted in its entirety.

B. For all Unit Price Work in accordance with Paragraph 13.03 of the General Conditions, an amount equal to the sum of the established unit price for each separately identified item of Unit Price Work times the actual quantity of that item:

Copyright© 2018 National Society of Professional Engineers, American Council of Engineering Companies, and American Society of Civil Engineers. All rights reserved.

Unit Price Work					
Item No.	**Description**	**Unit**	**Estimated Quantity**	**Unit Price**	**Extended Price**
See Exhibit No. 1 Contractor's Bid Schedule.					
Total of all Extended Prices for Unit Price Work (subject to final adjustment based on actual quantities)					$749,975.00

The Bid Unit Prices set forth above are guaranteed prices. Although the Estimated Quantities are estimates and may increase or decrease based on determinations of Engineer, Contractor agrees and understands that the Bid Unit Prices shall remain the same irrespective of the quantities. Contractor understands that in agreeing to any Bid Unit Price it is agreeing to bear the risk associated with any material price increase of escalation. Owner agrees and understands that in agreeing to any Bid Unit Price it is agreeing to bear the risk associated with any material price decrease or reduction.

C. Deleted in its entirety.

D. For all Work, at the prices stated in Contractor's Bid Schedule, attached hereto as an exhibit.

ARTICLE 6—PAYMENT PROCEDURES

6.01 *Submittal and Processing of Payments*

A. Contractor shall submit Applications for Payment in accordance with Article 15 of the General Conditions. Applications for Payment will be processed by Engineer as provided in the General Conditions.

6.02 *Progress Payments; Retainage*

A. Owner shall make progress payments on the basis of Contractor's Applications for Payment on or about the **15th** day of each month during performance of the Work as provided in Paragraph 6.02.A.1 below, provided that such Applications for Payment have been submitted in a timely manner and otherwise meet the requirements of the Contract. All such payments will be measured by the Schedule of Values established as provided in the General Conditions (and in the case of Unit Price Work based on the number of units completed) or, in the event there is no Schedule of Values, as provided elsewhere in the Contract.

1. Prior to Substantial Completion, progress payments will be made in an amount equal to the percentage indicated below but, in each case, less the aggregate of payments previously made and less such amounts as Owner may withhold, including but not limited to liquidated damages, in accordance with the Contract.

a. **95%** percent of the value of the Work completed (with the balance being retainage).

1) Deleted in its entirety.

b. Deleted in its entirety.

Copyright© 2018 National Society of Professional Engineers, American Council of Engineering Companies, and American Society of Civil Engineers. All rights reserved.

B. Owner shall withhold Five percent (5%) of each progress payment as retainage.

6.03 *Final Payment*

A. Upon final completion and acceptance of the Work, Owner shall pay the remainder of the Contract Price in accordance with Paragraph 15.06 of the General Conditions.

6.04 *Consent of Surety*

A. Owner will not make final payment, or return or release retainage at Substantial Completion or any other time, unless Contractor submits written consent of the surety to such payment, return, or release.

6.05 *Interest* Deleted in its entirety.

A. Deleted in its entirety.

ARTICLE 7—CONTRACT DOCUMENTS

7.01 *Contents*

A. The Contract Documents consist of all of the following:

1. This Agreement (pages 1 to 11, inclusive).
2. Bonds:
    a. Combination Payment and Performance bond, together with power of attorney, (pages 1 to 3, inclusive).
3. General Conditions (pages 1 to 74, inclusive).
4. Deleted in its entirety.
5. Technical Specifications, on file with City Engineer, Junos Reed (pages 1 to 260, inclusive).
6. Drawings, on file with City Engineer, Junos Reed (pages 1 to 26, inclusive).
7. Electrical information, on file with City Engineer, Junos Reed (pages 1 to 8, inclusive).
8. D3 Details, on file with City Engineer, Junos Reed (page 1, inclusive).
9. M1 Lift Station Mechanical Plan, on file with City Engineer, Junos Reed (page 1, inclusive).
10. Addendum No. 1_ (page 1, inclusive).
11. Addendum No. 2 (pages 1 to 2, inclusive).
12. Exhibits to this Agreement (enumerated as follows):
    a. Exhibit No. 1 Contractor's Bid Schedule (page 1, inclusive).
    b. Exhibit No. 2 Contractor's Proposal (pages 1 to 40, inclusive).
    c. Exhibit No. 3 Composite Exhibit No. 3 City's ITB 25-01 Lowes / Gateway Lift Station (LS82) Rehabilitation (pages 1 to 158, not attached, on file with office of the City Clerk).
13. The following which may be delivered or issued on or after the Effective Date of the Contract and are not attached hereto:
    a. Notice to Proceed.

Copyright© 2018 National Society of Professional Engineers, American Council of Engineering Companies, and American Society of Civil Engineers. All rights reserved.

b. Work Change Directives.

c. Change Orders.

d. Field Orders.

e. Warranty Bond, if any.

B. The Contract Documents listed in Paragraph 7.01.A are attached to this Agreement (except as expressly noted otherwise above).

C. There are no Contract Documents other than those listed above in this Article 7.

D. The Contract Documents may only be amended, modified, or supplemented as provided in the Contract.

ARTICLE 8—REPRESENTATIONS, CERTIFICATIONS, AND STIPULATIONS

8.01 *Contractor's Representations*

A. In order to induce Owner to enter into this Contract, Contractor makes the following representations:

1. Contractor has examined and carefully studied the Contract Documents, including Addenda.

2. Contractor has visited the Site, conducted a thorough visual examination of the Site and adjacent areas, and become familiar with the general, local, and Site conditions that may affect cost, progress, and performance of the Work.

3. Contractor is familiar with all Laws and Regulations that may affect cost, progress, and performance of the Work.

4. Contractor has carefully studied the reports of explorations and tests of subsurface conditions at or adjacent to the Site and the drawings of physical conditions relating to existing surface or subsurface structures at the Site that have been identified in the Supplementary Conditions, with respect to the Technical Data in such reports and drawings.

5. Contractor has carefully studied the reports and drawings relating to Hazardous Environmental Conditions, if any, at or adjacent to the Site that have been identified in the Supplementary Conditions, with respect to Technical Data in such reports and drawings.

6. Contractor has considered the information known to Contractor itself; information commonly known to contractors doing business in the locality of the Site; information and observations obtained from visits to the Site; the Contract Documents; and the Technical Data identified in the Supplementary Conditions or by definition, with respect to the effect of such information, observations, and Technical Data on (a) the cost, progress, and performance of the Work; (b) the means, methods, techniques, sequences, and procedures of construction to be employed by Contractor; and (c) Contractor's safety precautions and programs.

7. Based on the information and observations referred to in the preceding paragraph, Contractor agrees that no further examinations, investigations, explorations, tests, studies, or data are necessary for the performance of the Work at the Contract Price,

Copyright© 2018 National Society of Professional Engineers, American Council of Engineering Companies, and American Society of Civil Engineers. All rights reserved.

within the Contract Times, and in accordance with the other terms and conditions of the Contract.

8. Contractor is aware of the general nature of work to be performed by Owner and others at the Site that relates to the Work as indicated in the Contract Documents.

9. Contractor has given Engineer written notice of all conflicts, errors, ambiguities, or discrepancies that Contractor has discovered in the Contract Documents, and of discrepancies between Site conditions and the Contract Documents, and the written resolution thereof by Engineer is acceptable to Contractor.

10. The Contract Documents are generally sufficient to indicate and convey understanding of all terms and conditions for performance and furnishing of the Work.

11. Contractor's entry into this Contract constitutes an incontrovertible representation by Contractor that without exception all prices in the Agreement are premised upon performing and furnishing the Work required by the Contract Documents.

8.02 *Contractor's Certifications*

A. Contractor certifies that it has not engaged in corrupt, fraudulent, collusive, or coercive practices in competing for or in executing the Contract. For the purposes of this Paragraph 8.02:

1. "corrupt practice" means the offering, giving, receiving, or soliciting of anything of value likely to influence the action of a public official in the bidding process or in the Contract execution;

2. "fraudulent practice" means an intentional misrepresentation of facts made (a) to influence the bidding process or the execution of the Contract to the detriment of Owner, (b) to establish Bid or Contract prices at artificial non-competitive levels, or (c) to deprive Owner of the benefits of free and open competition;

3. "collusive practice" means a scheme or arrangement between two or more Bidders, with or without the knowledge of Owner, a purpose of which is to establish Bid prices at artificial, non-competitive levels; and

4. "coercive practice" means harming or threatening to harm, directly or indirectly, persons or their property to influence their participation in the bidding process or affect the execution of the Contract.

8.03 *Standard General Conditions*

A. Owner stipulates that if the General Conditions that are made a part of this Contract are EJCDC® C-700, Standard General Conditions for the Construction Contract (2018), published by the Engineers Joint Contract Documents Committee, and if Owner is the party that has furnished said General Conditions, then Owner has plainly shown all modifications to the standard wording of such published document to the Contractor, through a process such as highlighting or "track changes" (redline/strikeout), or in the Supplementary Conditions.

B. Any reference to Supplementary Conditions throughout this document, the C-520 Agreement between Owner and Contractor for Construction Contract (2018), and the EJCDC® C-700, Standard General Conditions for the Construction Contract (2018), are hereby deleted in their entirety.

Copyright© 2018 National Society of Professional Engineers, American Council of Engineering Companies, and American Society of Civil Engineers. All rights reserved.

ARTICLE 9—MISCELLANEOUS

9.01 *Assignment of Contract*

A. No assignment by a party hereto of any rights under or interests in the Contract will be binding on another party hereto without the written consent of the party sought to be bound; and, specifically but without limitation, moneys that may become due and moneys that are due may not be assigned without such consent (except to the extent that the effect of this restriction may be limited by law), and unless specifically stated to the contrary in any written consent to an assignment, no assignment will release or discharge the assignor from any duty or responsibility under the Contract Documents.

9.02 *Successors and Assigns*

Owner and Contractor each binds itself, its partners, successors, assigns, and legal representatives to the other party hereto, its partners, successors, assigns, and legal representatives in respect to all covenants, agreements, and obligations contained in the Contract Documents.

9.03 *Severability*

Any provisions or part of the Contract Documents held to be void or unenforceable under any Law or Regulation shall be deemed stricken, and all remaining provisions and parts shall continue to be valid and binding upon Owner and Contractor, who agree that the Contract Documents shall be reformed to replace such stricken provision or part thereof with a valid and enforceable provision or part that comes as close as possible to expressing the intention of the stricken provision.

9.04 *No-Damage-for-Delay*

Contractor shall not be entitled to any damages (including, without limitation, expenses, costs, fees, extended field overhead and general conditions, equipment costs, home office overhead, lost productivity and inefficiency damages, additional payroll and labor costs, etc.) for any delay to its Work. Contractor's sole and exclusive remedy for a delay to its Work that is not caused by Contractor (or a person or entity performing a portion of Contractor's scope of Work) shall be an extension of time to substantially complete and finally complete the Project; provided, however, that Owner granting Contractor an extension of time is not a condition precedent to this no-damage-for-delay provision. Contractor shall also not be entitled to any damages for disruption or interference to its Work or for having to accelerate or incur additional labor or payroll costs in order to make up or overcome a delay to its Work so that it can maintain the dates for Substantial Completion and Final Completion. Contractor agrees that in determining and agreeing to the Contract Price it is considered this no-damage-for-delay provision and understands that it is not entitled to any damages whatsoever for a delay to its Work.

9.05 *No intended Third-Party Beneficiaries*

There are no intended third-party beneficiaries to the Contract.

9.06 *Public Record Compliance*

Contractor shall comply with public records laws as set forth in Section 119, Florida Statutes, and shall specifically: (a) keep and maintain public records that ordinarily and necessarily would be required by the City in order to perform the service; (b) provide the public with access to

Copyright© 2018 National Society of Professional Engineers, American Council of Engineering Companies, and American Society of Civil Engineers. All rights reserved.

public records on the same terms and conditions that the City would provide the records at a cost that does not exceed the cost provided in Section 119, Florida Statutes, or as otherwise provided by law; (c) ensure that public records that are exempt or confidential and exempt from public records disclosure requirements are not disclosed except as authorized by law; and (d) meet all requirements for retaining public records and transfer to the City, at no cost, all public records in possession of the Contractor upon termination of the Contract and destroy any duplicate public records that are exempt or confidential and exempt from public records disclosure requirements. All records stored electronically must be provided to the City in a format that is compatible with the information technology systems of the City.

9.07 *Records*

The design, permits and all other records prepared by the Contractor, assembled for the City, subcontracted for the City, and any other records related to the scope of work in the possession of the Contractor shall be retained by the Contractor for the requisite time set forth in Florida Administration Code Rule 1 b-24.

http://dos.myflorida.com/library-archives/records-management/. Contractor may dispose of the records in accordance with Florida law, upon receipt of a signed written release signed by the City Attorney. Contractor agrees to indemnify the City for failure to comply with the requirements of this paragraph including costs of litigation and legal fees incurred through all appeals. City reserves the right to select and approve the defense attorney.

9.08 *Force Majure*

Neither party shall be liable for any delay in performance or failure to perform any obligation hereunder if, and to the extent that, such failure or delay is caused by an event of Force Majeure. Force Majeure shall mean any act, event or condition that is beyond the party's reasonable control, that materially and adversely affects the party's ability to perform its obligations hereunder, and that is not the result of the party's willful neglect, error, omission or failure to exercise reasonable due diligence.

9.09 *Contract construction*

This Contract may be executed in one or more counterparts, each of which shall be deemed an original but all of which together constitute one and the same instrument. The delivery by facsimile or e-mail of an executed copy of this Contract shall be deemed valid as if an original signature was delivered. No contract shall be formed between the Contractor and the City until both Parties have signed this Contract.

9.10 *Financial Disclosures*

During the term of this Contract, Contractor covenants and agrees that it will keep adequate books and records of accounts in accordance with Generally Accepted Accounting Principals (GAAP). Contractor further covenants and agrees that in the event the Contractor becomes insolvent and/or fails to pay its current obligations when they become due, Contractor shall so advise Owner of such situation and, upon request from the Owner, Contractor shall provide to

Copyright© 2018 National Society of Professional Engineers, American Council of Engineering Companies, and American Society of Civil Engineers. All rights reserved.

Owner financial statements of Contractor, including current income and expense statements of Contractor, consolidated balance sheets signed by a financial officer of Contractor, and audited reports provided by Contractor to Contractor's Surety, audited financial statements certified by a Certified Public Accountant concerning the financial affairs of the Contractor and all affiliates of Contractor, and such other financial information requested by Owner. All such financial information shall comply with GAAP.

In the event that Contractor becomes insolvent and/or fails to pay its obligations when they become due, Contractor hereby authorized its sureties, lenders, financial institutions and other third parties to release Owner financial information requested by Owner, including, but not limited to, the financial information described in the preceding paragraph.

9.11 *Waiver of Jury Trial*

All parties hereby waive any and all right to any trial by jury in any action or proceeding arising directly or indirectly hereunder.

Copyright© 2018 National Society of Professional Engineers, American Council of Engineering Companies, and American Society of Civil Engineers. All rights reserved.

IN WITNESS WHEREOF, Owner and Contractor have signed this Agreement.

This Agreement will be effective on _____ (which is the Effective Date of the Contract).

Contractor: RCM Utilities, LLC
(typed or printed name of organization)

By: _____
(individual's signature)

Date: _____
(date signed)

Name: Christopher R. Creech
(typed or printed)

Title: President
(typed or printed)

(If company is a corporation, a partnership, or a joint venture, attach evidence of authority to sign.)

Attest: _____
(individual's signature)

Title: _____
(typed or printed)

Address for giving notices:

1451 Pine Grove Road

Eustis, Florida 32726

Phone: (352) 561-2990

Email: melissa@rcmutilities.com

License No.: CUC1225240

State: Florida

Copyright© 2018 National Society of Professional Engineers, American Council of Engineering Companies, and American Society of Civil Engineers. All rights reserved.

Owner:

City of Port Orange

(typed or printed name of organization)

By: _____

(individual's signature)

Date: _____

(date signed)

Name: Scott Stiltner

(typed or printed)

Title: Mayor

(typed or printed)

Attest: Robin L. Fenwick, MMC

(individual's signature)

Title: City Clerk

(typed or printed)

Address for giving notices:

1000 City Center Circle

Port Orange, Florida 32129

(386) 506-5500

Copyright© 2018 National Society of Professional Engineers, American Council of Engineering Companies, and American Society of Civil Engineers. All rights reserved.

AGREEMENT BETWEEN OWNER AND CONTRACTOR FOR CONSTRUCTION CONTRACT (STIPULATED PRICE)

This Agreement is by and between **City of Port Orange, 1000 City Center Circle, Port Orange, Florida 32129** ("Owner") and ~~_____~~ **RCM Utilities, LLC, 1451 Pine Grove Road, Eustis, Florida 32726** ("Contractor").

Terms used in this Agreement have the meanings stated in the General Conditions and the Supplementary Conditions.

Owner and Contractor hereby agree as follows:

ARTICLE 1—WORK

1.01 Contractor shall complete all Work as specified or indicated in the Contract Documents. The Work is generally described as follows:

Work consists of replacing existing dry pumps with two submersible pumps, pour concrete pads and driveway, install bypass piping, place gravel around the lift station, build new fencing, and replace sod. Concrete, soil, and gravel replacement at all disturbed areas.~~_____~~.

ARTICLE 2—THE PROJECT

2.01 The Project, of which the Work under the Contract Documents is a part, is generally described as follows:

ITB 25-01 Lowes / Gateway Lift Station (LS82) Rehabilitation.

~~_____~~.

ARTICLE 3—ENGINEER

3.01 The part of the project that pertains to the Work has been designed by the Project Engineer, ~~_____~~, **Nicole E. McConnel, P.E.** ("Engineer") **of** ~~_____~~, **Kimley-Horn and Associates, Inc.,** and shall act as Owner's representative, assume all duties and responsibilities, and have the rights and authority assigned to Engineer in the Contract Documents in connection with the completion of the Work in accordance with the Contract Documents.

ARTICLE 4—CONTRACT TIMES

4.01 *Time is of the Essence*

A. All time limits for Milestones, if any, Substantial Completion, and completion and readiness for final payment as stated in the Contract Documents are of the essence of the Contract.

4.02 *Contract Times: Dates*

A. Deleted in its entirety.

Copyright© 2018 National Society of Professional Engineers, American Council of Engineering Companies, and American Society of Civil Engineers. All rights reserved.

4.03 *Contract Times: Days*

A. The Work will be substantially complete within ~~_____~~ **330** days after the date when the Contract Times commence to run as provided in Paragraph 4.01 of the General Conditions, and completed and ready for final payment in accordance with Paragraph 15.06 of the General Conditions.

4.04 *Milestones* – Deleted in its entirety.

4.05 *Liquidated Damages*

A. Contractor and Owner recognize that time is of the essence as stated in Paragraph 4.01 above and that Owner will suffer financial and other losses if the Work is not completed and Milestones not achieved within the Contract Times, as duly modified. The parties also recognize the delays, expense, and difficulties involved in proving, in a legal or arbitration proceeding, the actual loss suffered by Owner if the Work is not completed on time. Accordingly, instead of requiring any such proof, Owner and Contractor agree that as liquidated damages for delay (but not as a penalty):

1. *Substantial Completion:* Contractor shall pay Owner $0.00 for each day that expires after the time (as duly adjusted pursuant to the Contract) specified above for Substantial Completion, until the Work is substantially complete.

2. *Completion of Remaining Work:* After Substantial Completion, if Contractor shall neglect, refuse, or fail to complete the remaining Work within the Contract Times (as duly adjusted pursuant to the Contract) for completion and readiness for final payment, Contractor shall pay Owner $0.00 for each day that expires after such time until the Work is completed and ready for final payment.

3. Deleted in its entirety.

B. If Owner recovers liquidated damages for a delay in completion by Contractor, then such liquidated damages are Owner's sole and exclusive remedy for such delay, and Owner is precluded from recovering any other damages, whether actual, direct, excess, or consequential, for such delay, except for special damages (if any) specified in this Agreement.

C. Deleted in its entirety.

4.06 *Special Damages* - Deleted in its entirety.

A. Deleted in its entirety.

B. Deleted in its entirety.

C. Deleted in its entirety.

ARTICLE 5—CONTRACT PRICE

5.01 Owner shall pay Contractor for completion of the Work in accordance with the Contract Documents, the amounts that follow, subject to adjustment under the Contract:

A. Deleted in its entirety.

B. For all Unit Price Work in accordance with Paragraph 13.03 of the General Conditions, an amount equal to the sum of the established unit price for each separately identified item of Unit Price Work times the actual quantity of that item:

Copyright© 2018 National Society of Professional Engineers, American Council of Engineering Companies, and American Society of Civil Engineers. All rights reserved.

Unit Price Work					
Item No.	**Description**	**Unit**	**Estimated Quantity**	**Unit Price**	**Extended Price**
See Exhibit No. 1 Contractor's Bid Schedule.					
Total of all Extended Prices for Unit Price Work (subject to final adjustment based on actual quantities)					$749,975.00

The Bid Unit Prices set forth above are guaranteed prices. Although the Estimated Quantities are estimates and may increase or decrease based on determinations of Engineer, Contractor agrees and understands that the Bid Unit Prices shall remain the same irrespective of the quantities. Contractor understands that in agreeing to any Bid Unit Price it is agreeing to bear the risk associated with any material price increase of escalation. Owner agrees and understands that in agreeing to any Bid Unit Price it is agreeing to bear the risk associated with any material price decrease or reduction.

C. Deleted in its entirety.

D. For all Work, at the prices stated in Contractor's Bid Schedule, attached hereto as an exhibit.

ARTICLE 6—PAYMENT PROCEDURES

6.01 *Submittal and Processing of Payments*

A. Contractor shall submit Applications for Payment in accordance with Article 15 of the General Conditions. Applications for Payment will be processed by Engineer as provided in the General Conditions.

6.02 *Progress Payments; Retainage*

A. Owner shall make progress payments on the basis of Contractor's Applications for Payment on or about the **15th** day of each month during performance of the Work as provided in Paragraph 6.02.A.1 below, provided that such Applications for Payment have been submitted in a timely manner and otherwise meet the requirements of the Contract. All such payments will be measured by the Schedule of Values established as provided in the General Conditions (and in the case of Unit Price Work based on the number of units completed) or, in the event there is no Schedule of Values, as provided elsewhere in the Contract.

1. Prior to Substantial Completion, progress payments will be made in an amount equal to the percentage indicated below but, in each case, less the aggregate of payments previously made and less such amounts as Owner may withhold, including but not limited to liquidated damages, in accordance with the Contract.

a. **95%** percent of the value of the Work completed (with the balance being retainage).

1) Deleted in its entirety.

b. Deleted in its entirety.

Copyright© 2018 National Society of Professional Engineers, American Council of Engineering Companies, and American Society of Civil Engineers. All rights reserved.

B. Owner shall withhold Five percent (5%) of each progress payment as retainage.

6.03 *Final Payment*

A. Upon final completion and acceptance of the Work, Owner shall pay the remainder of the Contract Price in accordance with Paragraph 15.06 of the General Conditions.

6.04 *Consent of Surety*

A. Owner will not make final payment, or return or release retainage at Substantial Completion or any other time, unless Contractor submits written consent of the surety to such payment, return, or release.

6.05 *Interest* Deleted in its entirety.

A. Deleted in its entirety.

ARTICLE 7—CONTRACT DOCUMENTS

7.01 *Contents*

A. The Contract Documents consist of all of the following:

1. This Agreement (pages 1 to ~~__,~~ 11, inclusive).
2. Bonds:
   a. Combination Payment and Performance bond, together with power of attorney, (pages 1 to 3, inclusive).
3. General Conditions (pages 1 to 74, inclusive).
4. Deleted in its entirety.
5. Technical Specifications, on file with City Engineer, Junos Reed (pages ~~__~~ 1 to ~~____,~~ 260, inclusive).
6. Bid Set Drawings, on file with City Engineer, Junos Reed (pages ~~__~~ 1 to ~~__,~~ 26, inclusive).
7. Electrical information, on file with City Engineer, Junos Reed (pages 1 to 8, inclusive).
8. D3 Details, on file with City Engineer, Junos Reed (page 1, inclusive).
9. M1 Lift Station Mechanical Plan, on file with City Engineer, Junos Reed (page 1, inclusive).
10. Addendum No. 1 (page 1, inclusive).
11. Addendum No. 2 (pages 1 to 2, inclusive).
12. Exhibits to this Agreement (enumerated as follows):
    a. Exhibit No. 1 Contractor's Bid Schedule (page 1, inclusive).
    b. Exhibit No. 2 Contractor's Proposal (pages 1 to 40, inclusive).
    c. Exhibit No. 3 Composite Exhibit No. 3 City's ITB 25-01 Lowes / Gateway Lift Station (LS82) Rehabilitation (pages 1 to 158, not attached, on file with office of the City Clerk).

~~7. Addendum No. __ (pages __ to __, inclusive).~~

~~8. Addendum No. __ (pages __ to __, inclusive).~~

Copyright© 2018 National Society of Professional Engineers, American Council of Engineering Companies, and American Society of Civil Engineers. All rights reserved.

~~9. Exhibits to this Agreement (enumerated as follows):~~

~~a. Exhibit No. 1 Contractor's Bid Schedule (page __, inclusive).~~

~~b. Exhibit No. 2 Contractor's Proposal (pages __ to __, inclusive).~~

~~c. Exhibit No. 3 Composite Exhibit No. 3 City's _____ (pages __ to ___, not attached, on file with office of the City Clerk).~~

~~10~~13. The following which may be delivered or issued on or after the Effective Date of the Contract and are not attached hereto:

a. Notice to Proceed.

b. Work Change Directives.

c. Change Orders.

d. Field Orders.

e. Warranty Bond, if any.

B. The Contract Documents listed in Paragraph 7.01.A are attached to this Agreement (except as expressly noted otherwise above).

C. There are no Contract Documents other than those listed above in this Article 7.

D. The Contract Documents may only be amended, modified, or supplemented as provided in the Contract.

ARTICLE 8—REPRESENTATIONS, CERTIFICATIONS, AND STIPULATIONS

8.01 *Contractor's Representations*

A. In order to induce Owner to enter into this Contract, Contractor makes the following representations:

1. Contractor has examined and carefully studied the Contract Documents, including Addenda.

2. Contractor has visited the Site, conducted a thorough visual examination of the Site and adjacent areas, and become familiar with the general, local, and Site conditions that may affect cost, progress, and performance of the Work.

3. Contractor is familiar with all Laws and Regulations that may affect cost, progress, and performance of the Work.

4. Contractor has carefully studied the reports of explorations and tests of subsurface conditions at or adjacent to the Site and the drawings of physical conditions relating to existing surface or subsurface structures at the Site that have been identified in the Supplementary Conditions, with respect to the Technical Data in such reports and drawings.

5. Contractor has carefully studied the reports and drawings relating to Hazardous Environmental Conditions, if any, at or adjacent to the Site that have been identified in the Supplementary Conditions, with respect to Technical Data in such reports and drawings.

Copyright© 2018 National Society of Professional Engineers, American Council of Engineering Companies, and American Society of Civil Engineers. All rights reserved.

6. Contractor has considered the information known to Contractor itself; information commonly known to contractors doing business in the locality of the Site; information and observations obtained from visits to the Site; the Contract Documents; and the Technical Data identified in the Supplementary Conditions or by definition, with respect to the effect of such information, observations, and Technical Data on (a) the cost, progress, and performance of the Work; (b) the means, methods, techniques, sequences, and procedures of construction to be employed by Contractor; and (c) Contractor's safety precautions and programs.

7. Based on the information and observations referred to in the preceding paragraph, Contractor agrees that no further examinations, investigations, explorations, tests, studies, or data are necessary for the performance of the Work at the Contract Price, within the Contract Times, and in accordance with the other terms and conditions of the Contract.

8. Contractor is aware of the general nature of work to be performed by Owner and others at the Site that relates to the Work as indicated in the Contract Documents.

9. Contractor has given Engineer written notice of all conflicts, errors, ambiguities, or discrepancies that Contractor has discovered in the Contract Documents, and of discrepancies between Site conditions and the Contract Documents, and the written resolution thereof by Engineer is acceptable to Contractor.

10. The Contract Documents are generally sufficient to indicate and convey understanding of all terms and conditions for performance and furnishing of the Work.

11. Contractor's entry into this Contract constitutes an incontrovertible representation by Contractor that without exception all prices in the Agreement are premised upon performing and furnishing the Work required by the Contract Documents.

8.02 *Contractor's Certifications*

A. Contractor certifies that it has not engaged in corrupt, fraudulent, collusive, or coercive practices in competing for or in executing the Contract. For the purposes of this Paragraph 8.02:

1. "corrupt practice" means the offering, giving, receiving, or soliciting of anything of value likely to influence the action of a public official in the bidding process or in the Contract execution;

2. "fraudulent practice" means an intentional misrepresentation of facts made (a) to influence the bidding process or the execution of the Contract to the detriment of Owner, (b) to establish Bid or Contract prices at artificial non-competitive levels, or (c) to deprive Owner of the benefits of free and open competition;

3. "collusive practice" means a scheme or arrangement between two or more Bidders, with or without the knowledge of Owner, a purpose of which is to establish Bid prices at artificial, non-competitive levels; and

4. "coercive practice" means harming or threatening to harm, directly or indirectly, persons or their property to influence their participation in the bidding process or affect the execution of the Contract.

Copyright© 2018 National Society of Professional Engineers, American Council of Engineering Companies, and American Society of Civil Engineers. All rights reserved.

8.03 *Standard General Conditions*

A. Owner stipulates that if the General Conditions that are made a part of this Contract are EJCDC® C-700, Standard General Conditions for the Construction Contract (2018), published by the Engineers Joint Contract Documents Committee, and if Owner is the party that has furnished said General Conditions, then Owner has plainly shown all modifications to the standard wording of such published document to the Contractor, through a process such as highlighting or "track changes" (redline/strikeout), or in the Supplementary Conditions.

B. Any reference to Supplementary Conditions throughout this document, the C-520 Agreement between Owner and Contractor for Construction Contract (2018), and the EJCDC® C-700, Standard General Conditions for the Construction Contract (2018), are hereby deleted in their entirety.

ARTICLE 9—MISCELLANEOUS

9.01 *Assignment of Contract*

A. No assignment by a party hereto of any rights under or interests in the Contract will be binding on another party hereto without the written consent of the party sought to be bound; and, specifically but without limitation, moneys that may become due and moneys that are due may not be assigned without such consent (except to the extent that the effect of this restriction may be limited by law), and unless specifically stated to the contrary in any written consent to an assignment, no assignment will release or discharge the assignor from any duty or responsibility under the Contract Documents.

9.02 *Successors and Assigns*

Owner and Contractor each binds itself, its partners, successors, assigns, and legal representatives to the other party hereto, its partners, successors, assigns, and legal representatives in respect to all covenants, agreements, and obligations contained in the Contract Documents.

9.03 *Severability*

Any provisions or part of the Contract Documents held to be void or unenforceable under any Law or Regulation shall be deemed stricken, and all remaining provisions and parts shall continue to be valid and binding upon Owner and Contractor, who agree that the Contract Documents shall be reformed to replace such stricken provision or part thereof with a valid and enforceable provision or part that comes as close as possible to expressing the intention of the stricken provision.

9.04 *No-Damage-for-Delay*

Contractor shall not be entitled to any damages (including, without limitation, expenses, costs, fees, extended field overhead and general conditions, equipment costs, home office overhead, lost productivity and inefficiency damages, additional payroll and labor costs, etc.) for any delay to its Work. Contractor's sole and exclusive remedy for a delay to its Work that is not caused by Contractor (or a person or entity performing a portion of Contractor's scope of Work) shall be an extension of time to substantially complete and finally complete the Project; provided, however, that Owner granting Contractor an extension of time is not a condition precedent to this no-damage-for-delay provision. Contractor shall also not be entitled to any damages for disruption

Copyright© 2018 National Society of Professional Engineers, American Council of Engineering Companies, and American Society of Civil Engineers. All rights reserved.

or interference to its Work or for having to accelerate or incur additional labor or payroll costs in order to make up or overcome a delay to its Work so that it can maintain the dates for Substantial Completion and Final Completion. Contractor agrees that in determining and agreeing to the Contract Price it is considered this no-damage-for-delay provision and understands that it is not entitled to any damages whatsoever for a delay to its Work.

9.05 *No intended Third-Party Beneficiaries*

There are no intended third-party beneficiaries to the Contract.

9.06 *Public Record Compliance*

Contractor shall comply with public records laws as set forth in Section 119, Florida Statutes, and shall specifically: (a) keep and maintain public records that ordinarily and necessarily would be required by the City in order to perform the service; (b) provide the public with access to public records on the same terms and conditions that the City would provide the records at a cost that does not exceed the cost provided in Section 119, Florida Statutes, or as otherwise provided by law; (c) ensure that public records that are exempt or confidential and exempt from public records disclosure requirements are not disclosed except as authorized by law; and (d) meet all requirements for retaining public records and transfer to the City, at no cost, all public records in possession of the Contractor upon termination of the Contract and destroy any duplicate public records that are exempt or confidential and exempt from public records disclosure requirements. All records stored electronically must be provided to the City in a format that is compatible with the information technology systems of the City.

9.07 *Records*

The design, permits and all other records prepared by the Contractor, assembled for the City, subcontracted for the City, and any other records related to the scope of work in the possession of the Contractor shall be retained by the Contractor for the requisite time set forth in Florida Administration Code Rule 1 b-24.

http://dos.myflorida.com/library-archives/records-management/. Contractor may dispose of the records in accordance with Florida law, upon receipt of a signed written release signed by the City Attorney. Contractor agrees to indemnify the City for failure to comply with the requirements of this paragraph including costs of litigation and legal fees incurred through all appeals. City reserves the right to select and approve the defense attorney.

9.08 *Force Majure*

Neither party shall be liable for any delay in performance or failure to perform any obligation hereunder if, and to the extent that, such failure or delay is caused by an event of Force Majeure. Force Majeure shall mean any act, event or condition that is beyond the party's reasonable control, that materially and adversely affects the party's ability to perform its obligations hereunder, and that is not the result of the party's willful neglect, error, omission or failure to exercise reasonable due diligence.

9.09 *Contract construction*

Copyright© 2018 National Society of Professional Engineers, American Council of Engineering Companies, and American Society of Civil Engineers. All rights reserved.

This Contract may be executed in one or more counterparts, each of which shall be deemed an original but all of which together constitute one and the same instrument. The delivery by facsimile or e-mail of an executed copy of this Contract shall be deemed valid as if an original signature was delivered. No contract shall be formed between the Contractor and the City until both Parties have signed this Contract.

9.10 *Financial Disclosures*

During the term of this Contract, Contractor covenants and agrees that it will keep adequate books and records of accounts in accordance with Generally Accepted Accounting Principals (GAAP). Contractor further covenants and agrees that in the event the Contractor becomes insolvent and/or fails to pay its current obligations when they become due, Contractor shall so advise Owner of such situation and, upon request from the Owner, Contractor shall provide to Owner financial statements of Contractor, including current income and expense statements of Contractor, consolidated balance sheets signed by a financial officer of Contractor, and audited reports provided by Contractor to Contractor's Surety, audited financial statements certified by a Certified Public Accountant concerning the financial affairs of the Contractor and all affiliates of Contractor, and such other financial information requested by Owner. All such financial information shall comply with GAAP.

In the event that Contractor becomes insolvent and/or fails to pay its obligations when they become due, Contractor hereby authorized its sureties, lenders, financial institutions and other third parties to release Owner financial information requested by Owner, including, but not limited to, the financial information described in the preceding paragraph.

9.11 *Waiver of Jury Trial*

All parties hereby waive any and all right to any trial by jury in any action or proceeding arising directly or indirectly hereunder.

Copyright© 2018 National Society of Professional Engineers, American Council of Engineering Companies, and American Society of Civil Engineers. All rights reserved.

IN WITNESS WHEREOF, Owner and Contractor have signed this Agreement.

This Agreement will be effective on _____ (which is the Effective Date of the Contract).

Contractor: RCM Utilities, Inc.

(typed or printed name of organization)

By: _____

(individual's signature)

Date: _____

(date signed)

Name: Christopher R. Creech

(typed or printed)

Title: President

(typed or printed)

(If company is a corporation, a partnership, or a joint venture, attach evidence of authority to sign.)

Attest: _____

(individual's signature)

Title: _____

(typed or printed)

Address for giving notices:

1451 Pine Grove Road

Eustis, Florida 32726

Phone: (352) 561-2990

Email: melissa@rcmutilities.com

License No.: CUC1225240

State: Florida

EJCDC® C-520, Agreement between Owner and Contractor for Construction Contract (Stipulated Price).
Copyright© 2018 National Society of Professional Engineers, American Council of Engineering Companies, and American Society of Civil Engineers. All rights reserved.

Owner:

City of Port Orange

(typed or printed name of organization)

By: _____

(individual's signature)

Date: _____

(date signed)

Name: Scott Stiltner

(typed or printed)

Title: Mayor

(typed or printed)

Attest: Robin L. Fenwick, MMC

(individual's signature)

Title: City Clerk

(typed or printed)

Address for giving notices:

1000 City Center Circle

Port Orange, Florida 32129

(386) 506-5500

EJCDC® C-520, Agreement between Owner and Contractor for Construction Contract (Stipulated Price).
Copyright© 2018 National Society of Professional Engineers, American Council of Engineering Companies, and American Society of Civil Engineers. All rights reserved.

Payment and Performance Bond

For Completion and Return to City for Recording

Consisting of 3 Pages

FRONT PAGE FOR BOND REQUIRED BY SECTION 255.05, F.S.

PAYMENT AND PERFORMANCE BOND

(Public Works)

Notice and Time Limitations Must Be In Accordance
With Section 255.05(2), (8) and (10), Florida Statutes

BOND NO. _____

PRINCIPAL:

Developer or Contractor:	RCM Utilities, LLC
Principal Business Address:	1451 Pine Grove Road Eustis, Florida 32726
Contact Person:	Christopher R. Creech, President
Phone Number:	(352) 561-2990

SURETY:

Address:	_____
	_____
Contact Person:	_____
Phone Number:	_____

OWNER:	City of Port Orange, Florida, a chartered municipal corporation 1000 City Center Circle Port Orange, Florida 32129-4144
Contact Person:	City Manager
Phone Number:	(386) 506-5501

Amount: $749,975.00 **City Case/Project No.** **ITB 25-01 Lowes/Gateway Lift Station (LS82) Rehabilitation**

Description of Work: ITB 25-01 Lowes/Gateway Lift Station (LS82) Rehabilitation

Project Location: As provided in legal description below within the City of Port Orange, Volusia County, Florida

Legal Description: A lift station easement granted to the City of Port Orange, pursuant to Port Orange Gateway Center replat, being a record of map book 50, page 24, public records of Volusia County, Florida, said easement being a portion of lot 6 of said subdivision, Port Orange, Volusia County, Florida.

Front Page

All other pages are subsequent to this page regardless of any numbers that may be printed thereon.

[MTR/sal 2015-02-10]
[CA8632]

RCM Utilities, LLC

ITB 25-01 Lowes / Gateway Lift Station (LS82) Rehabilitation

Bond No._____

COMBINATION PAYMENT AND PERFORMANCE BOND
FOR
PUBLIC CONSTRUCTION

per Section 255.05, Florida Statutes
Guaranty for Construction of Public Improvements

BY THIS BOND, We, **RCM UTILITIES, LLC** as Principal, and _____, a corporation, as Surety, are bound to **CITY OF PORT ORANGE, FLORIDA**, a Florida municipal corporation, herein called "Owner" or sometimes referred to as "City," in the sum of **SEVEN HUNDRED FORTY-NINE THOUSAND NINE HUNDRED SEVENTY-FIVE AND 00/100 DOLLARS** (**$749,975.00**), for payment of which we bind ourselves, our heirs, personal representatives, successors, and assigns, jointly and severally.

THE CONDITION OF THIS BOND is that if Principal:

1. Performs the terms of that certain EJCDC Agreement having an effective date of _____, entered into by and between the Principal and the City, for Lowes/Gateway Lift Station (LS82) Rehabilitation, hereinafter referred to as the "Contract," being made a part of this bond by reference, at the times and in the manner prescribed in the Contract; and

2. Promptly makes payments to all claimants, as defined in Section 255.05(1), Florida Statutes, supplying Principal with labor, materials, or supplies, used directly or indirectly by Principal in the prosecution of the work provided for in the Contract (the "Work"); and

3. Pays Owner all losses, damages, delay damages (including contractually authorized liquidated damages), expenses, costs, and attorney's fees, including appellate proceedings, that Owner sustains because of a breach or material breach by Principal under the Contract documents; and

4. Performs the guarantee of all work and materials furnished under the Contract for the time specified in the Contract, then this bond is void; otherwise it remains in full force.

Notice of Nonpayment and Time Limitations

Any action instituted by a claimant under this bond for payment must be in accordance with the notice and time limitation provisions in Sections 255.05(2), (8) and (10), Florida Statutes.

Any changes in or under the contract documents and compliance or noncompliance with any formalities connected with the contract or the changes does not affect Surety's obligation under this bond.

IN WITNESS WHEREOF, this performance and payment bond shall be deemed an original, this _____, day of _____, 2025.

Attest:

RCM UTILITIES, LLC
(Name of Principal)

_____
(As to Corporate Principal) Secretary

By:_____
Christopher R. Creech, President

_____
(Witness to Principal)

(Corporate Seal)

_____
(Surety)

_____
(Witness to Surety)

By:_____
Name:_____
(Attorney-in-Fact)

(Corporate Seal)

NOTE: ***Date of BOND must not be prior to date of Contract.*** *If Developer/Principal is Partnership, all partners should execute BOND. All BONDS signed by an agent must be accompanied by a certified copy of the authority to act.*

IMPORTANT: Surety companies executing BONDS must appear on the Treasury Department's most current list (Circular 570 as amended) and be authorized to transact business in the State of Florida.

EJCDC General Conditions

Consisting of 74 Pages

This document has important legal consequences; consultation with an attorney is encouraged with respect to its use or modification. This document should be adapted to the particular circumstances of the contemplated Project and the controlling Laws and Regulations.

STANDARD GENERAL CONDITIONS OF THE CONSTRUCTION CONTRACT

Prepared By

EJCDC®
ENGINEERS JOINT CONTRACT DOCUMENTS COMMITTEE

ACEC
AMERICAN COUNCIL OF ENGINEERING COMPANIES

ASCE
AMERICAN SOCIETY OF CIVIL ENGINEERS

NSPE®
NATIONAL SOCIETY OF PROFESSIONAL ENGINEERS

Endorsed By

CSI®
Building Knowledge
Improving Project Delivery

NUCA
We Dig America

EJCDC® C-700, Standard General Conditions of the Construction Contract.
Copyright© 2018 National Society of Professional Engineers, American Council of Engineering Companies, and American Society of Civil Engineers. All rights reserved.

4885-5313-8281, v. 424

Copyright© 2018

National Society of Professional Engineers

1420 King Street, Alexandria, VA 22314-2794

(703) 684-2882

www.nspe.org

American Council of Engineering Companies

1015 15th Street N.W., Washington, DC 20005

(202) 347-7474

www.acec.org

American Society of Civil Engineers

1801 Alexander Bell Drive, Reston, VA 20191-4400

(800) 548-2723

www.asce.org

The copyright for this EJCDC document is owned jointly by the three sponsoring organizations listed above. The National Society of Professional Engineers is the Copyright Administrator for the EJCDC documents; please direct all inquiries regarding EJCDC copyrights to NSPE.

NOTE: EJCDC publications may be purchased at www.ejcdc.org, or from any of the sponsoring organizations above.

Copyright© 2018 National Society of Professional Engineers, American Council of Engineering Companies, and American Society of Civil Engineers. All rights reserved.

STANDARD GENERAL CONDITIONS OF THE CONSTRUCTION CONTRACT

TABLE OF CONTENTS

Page

Article 1—Definitions and Terminology 1
1.01 Defined Terms 1
1.02 Terminology 6
Article 2—Preliminary Matters 7
2.01 Delivery of Performance and Payment Bonds; Evidence of Insurance 7
2.02 Copies of Documents 8
2.03 Before Starting Construction 8
2.04 Preconstruction Conference; Designation of Authorized Representatives 8
2.05 Acceptance of Schedules 8
2.06 Electronic Transmittals 9
Article 3—Contract Documents: Intent, Requirements, Reuse 10
3.01 Intent 10
3.02 Reference Standards 10
3.03 Reporting and Resolving Discrepancies 11
3.04 Requirements of the Contract Documents 12
3.05 Reuse of Documents 12
Article 4—Commencement and Progress of the Work 13
4.01 Commencement of Contract Times; Notice to Proceed 13
4.02 Starting the Work 13
4.03 Reference Points 13
4.04 Progress Schedule 13
4.05 Delays in Contractor's Progress 13
Article 5—Site; Subsurface and Physical Conditions; Hazardous Environmental Conditions 15
5.01 Availability of Lands 15
5.02 Use of Site and Other Areas 15
5.03 Subsurface and Physical Conditions 16
5.04 Differing Subsurface or Physical Conditions 17

Copyright© 2018 National Society of Professional Engineers, American Council of Engineering Companies, and American Society of Civil Engineers. All rights reserved.

5.05 Underground Facilities 19
5.06 Hazardous Environmental Conditions at Site 21
Article 6—Bonds and Insurance 23
6.01 Performance, Payment, and Other Bonds 23
6.02 Insurance—General Provisions 24
6.03 Contractor's Insurance 25
6.04 Builder's Risk and Other Property Insurance 26
6.05 Property Losses; Subrogation 27
6.06 Receipt and Application of Property Insurance Proceeds 28
Article 7—Contractor's Responsibilities 29
7.01 Contractor's Means and Methods of Construction 29
7.02 Supervision and Superintendence 29
7.03 Labor; Working Hours 29
7.04 Services, Materials, and Equipment 30
7.05 "Or Equals" 30
7.06 Substitutes 31
7.07 Concerning Subcontractors and Suppliers 33
7.08 Patent Fees and Royalties 34
7.09 Permits 34
7.10 Taxes 35
7.11 Laws and Regulations 35
7.12 Record Documents 35
7.13 Safety and Protection 35
7.14 Hazard Communication Programs 37
7.15 Emergencies 37
7.16 Submittals 37
7.17 Contractor's General Warranty and Guarantee 40
7.18 Indemnification 41
7.19 Delegation of Professional Design Services 42
Article 8—Other Work at the Site 43
8.01 Other Work 43
8.02 Coordination 43
8.03 Legal Relationships 44

Copyright© 2018 National Society of Professional Engineers, American Council of Engineering Companies, and American Society of Civil Engineers. All rights reserved.

Article 9—Owner's Responsibilities 45
9.01 Communications to Contractor 45
9.02 Replacement of Engineer 45
9.03 Furnish Data 45
9.04 Pay When Due 45
9.05 Lands and Easements; Reports, Tests, and Drawings 45
9.06 Insurance 45
9.07 Change Orders 46
9.08 Inspections, Tests, and Approvals 46
9.09 Limitations on Owner's Responsibilities 46
9.10 Undisclosed Hazardous Environmental Condition 46
9.11 Evidence of Financial Arrangements 46
9.12 Safety Programs 46
Article 10—Engineer's Status During Construction 46
10.01 Owner's Representative 46
10.02 Visits to Site 46
10.03 Resident Project Representative 47
10.04 Engineer's Authority 47
10.05 Determinations for Unit Price Work 47
10.06 Decisions on Requirements of Contract Documents and Acceptability of Work 47
10.07 Limitations on Engineer's Authority and Responsibilities 48
10.08 Compliance with Safety Program 48
Article 11—Changes to the Contract 48
11.01 Amending and Supplementing the Contract 48
11.02 Change Orders 49
11.03 Work Change Directives 49
11.04 Field Orders 49
11.05 Owner-Authorized Changes in the Work 50
11.06 Unauthorized Changes in the Work 50
11.07 Change of Contract Price 50
11.08 Change of Contract Times 51
11.09 Change Proposals 52
11.10 Notification to Surety 53

Copyright© 2018 National Society of Professional Engineers, American Council of Engineering Companies, and American Society of Civil Engineers. All rights reserved.

Article 12—Claims 54
12.01 Claims 54
Article 13—Cost of the Work; Allowances; Unit Price Work 54
13.01 Cost of the Work 54
13.02 Allowances 58
13.03 Unit Price Work 58
Article 14—Tests and Inspections; Correction, Removal, or Acceptance of Defective Work 59
14.01 Access to Work 59
14.02 Tests, Inspections, and Approvals 59
14.03 Defective Work 60
14.04 Acceptance of Defective Work 61
14.05 Uncovering Work 61
14.06 Owner May Stop the Work 62
14.07 Owner May Correct Defective Work 62
Article 15—Payments to Contractor; Set-Offs; Completion; Correction Period 62
15.01 Progress Payments 62
15.02 Contractor's Warranty of Title 66
15.03 Substantial Completion 66
15.04 Partial Use or Occupancy 67
15.05 Final Inspection 68
15.06 Final Payment 68
15.07 Waiver of Claims 69
15.08 Correction Period 70
Article 16—Suspension of Work and Termination 71
16.01 Owner May Suspend Work 71
16.02 Owner May Terminate for Cause 71
16.03 Owner May Terminate for Convenience 72
16.04 Contractor May Stop Work or Terminate 72
Article 17—Final Resolution of Disputes 73
17.01 Methods and Procedures 73
Article 18—Miscellaneous 74
18.01 Giving Notice 74
18.02 Computation of Times 74

Copyright© 2018 National Society of Professional Engineers, American Council of Engineering Companies, and American Society of Civil Engineers. All rights reserved.

18.03 Cumulative Remedies 74
18.04 Limitation of Damages 74
18.05 No Waiver 74
18.06 Survival of Obligations 74
18.07 Controlling Law 75
18.08 Assignment of Contract 75
18.09 Successors and Assigns 75
18.10 Headings 75

Copyright© 2018 National Society of Professional Engineers, American Council of Engineering Companies, and American Society of Civil Engineers. All rights reserved.

STANDARD GENERAL CONDITIONS OF THE CONSTRUCTION CONTRACT

ARTICLE 1—DEFINITIONS AND TERMINOLOGY

1.01 *Defined Terms*

A. Wherever used in the Bidding Requirements or Contract Documents, a term printed with initial capital letters, including the term's singular and plural forms, will have the meaning indicated in the definitions below. In addition to terms specifically defined, terms with initial capital letters in the Contract Documents include references to identified articles and paragraphs, and the titles of other documents or forms.

1. *Addenda*—Written or graphic instruments issued prior to the opening of Bids which clarify, correct, or change the Bidding Requirements or the proposed Contract Documents.

2. *Agreement*—The written instrument, executed by Owner and Contractor, that sets forth the Contract Price and Contract Times, identifies the parties and the Engineer, and designates the specific items that are Contract Documents.

3. *Application for Payment*—The document prepared by Contractor, in a form acceptable to Engineer, to request progress or final payments, and which is to be accompanied by such supporting documentation as is required by the Contract Documents.

4. *Bid*—The offer of a Bidder submitted on the prescribed form setting forth the prices for the Work to be performed.

5. *Bidder*—An individual or entity that submits a Bid to Owner.

6. *Bidding Documents*—The Bidding Requirements, the proposed Contract Documents, and all Addenda.

7. *Bidding Requirements*—The Advertisement or invitation to bid, Instructions to Bidders, Bid Bond or other Bid security, if any, the Bid Form, and the Bid with any attachments.

8. *Change Order*—A document which is signed by Contractor and Owner and authorizes an addition, deletion, or revision in the Work or an adjustment in the Contract Price or the Contract Times, or other revision to the Contract, issued on or after the Effective Date of the Contract.

9. *Change Proposal*—A written request by Contractor, duly submitted in compliance with the procedural requirements set forth herein, seeking an adjustment in Contract Price or Contract Times; contesting an initial decision by Engineer concerning the requirements of the Contract Documents or the acceptability of Work under the Contract Documents; challenging a set-off against payments due; or seeking other relief with respect to the terms of the Contract.

Copyright© 2018 National Society of Professional Engineers, American Council of Engineering Companies, and American Society of Civil Engineers. All rights reserved.

10. *Claim*

    a. A demand or assertion by Owner directly to Contractor, duly submitted in compliance with the procedural requirements set forth herein, seeking an adjustment of Contract Price or Contract Times; contesting an initial decision by Engineer concerning the requirements of the Contract Documents or the acceptability of Work under the Contract Documents; contesting Engineer's decision regarding a Change Proposal; seeking resolution of a contractual issue that Engineer has declined to address; or seeking other relief with respect to the terms of the Contract.

    b. A demand or assertion by Contractor directly to Owner, duly submitted in compliance with the procedural requirements set forth herein, contesting Engineer's decision regarding a Change Proposal, or seeking resolution of a contractual issue that Engineer has declined to address.

    c. A demand or assertion by Owner or Contractor, duly submitted in compliance with the procedural requirements set forth herein, made pursuant to Paragraph 12.01.A.4, concerning disputes arising after Engineer has issued a recommendation of final payment.

    d. A demand for money or services by a third party is not a Claim.

11. *Constituent of Concern*—Asbestos, petroleum, radioactive materials, polychlorinated biphenyls (PCBs), lead-based paint (as defined by the HUD/EPA standard), hazardous waste, and any substance, product, waste, or other material of any nature whatsoever that is or becomes listed, regulated, or addressed pursuant to Laws and Regulations regulating, relating to, or imposing liability or standards of conduct concerning, any hazardous, toxic, or dangerous waste, substance, or material.

12. *Contract*—The entire and integrated written contract between Owner and Contractor concerning the Work.

13. *Contract Documents*—Those items so designated in the Agreement, and which together comprise the Contract.

14. *Contract Price*—The money that Owner has agreed to pay Contractor for completion of the Work in accordance with the Contract Documents.

15. *Contract Times*—The number of days or the dates by which Contractor shall: (a) achieve Milestones, if any; (b) achieve Substantial Completion; and (c) complete the Work.

16. *Contractor*—The individual or entity with which Owner has contracted for performance of the Work.

17. *Cost of the Work*—See Paragraph 13.01 for definition.

18. *Drawings*—The part of the Contract that graphically shows the scope, extent, and character of the Work to be performed by Contractor.

19. *Effective Date of the Contract*—The date, indicated in the Agreement, on which the Contract becomes effective.

Copyright© 2018 National Society of Professional Engineers, American Council of Engineering Companies, and American Society of Civil Engineers. All rights reserved.

20. *Electronic Document*—Any Project-related correspondence, attachments to correspondence, data, documents, drawings, information, or graphics, including but not limited to Shop Drawings and other Submittals, that are in an electronic or digital format.

21. *Electronic Means*—Electronic mail (email), upload/download from a secure Project website, or other communications methods that allow: (a) the transmission or communication of Electronic Documents; (b) the documentation of transmissions, including sending and receipt; (c) printing of the transmitted Electronic Document by the recipient; (d) the storage and archiving of the Electronic Document by sender and recipient; and (e) the use by recipient of the Electronic Document for purposes permitted by this Contract. Electronic Means does not include the use of text messaging, or of Facebook, Twitter, Instagram, or similar social media services for transmission of Electronic Documents.

22. *Engineer*—The individual or entity named as such in the Agreement.

23. *Field Order*—A written order issued by Engineer which requires minor changes in the Work but does not change the Contract Price or the Contract Times.

24. *Hazardous Environmental Condition*—The presence at the Site of Constituents of Concern in such quantities or circumstances that may present a danger to persons or property exposed thereto.

    a. The presence at the Site of materials that are necessary for the execution of the Work, or that are to be incorporated into the Work, and that are controlled and contained pursuant to industry practices, Laws and Regulations, and the requirements of the Contract, is not a Hazardous Environmental Condition.

    b. The presence of Constituents of Concern that are to be removed or remediated as part of the Work is not a Hazardous Environmental Condition.

    c. The presence of Constituents of Concern as part of the routine, anticipated, and obvious working conditions at the Site, is not a Hazardous Environmental Condition.

25. *Laws and Regulations; Laws or Regulations*—Any and all applicable laws, statutes, rules, regulations, ordinances, codes, and binding decrees, resolutions, and orders of any and all governmental bodies, agencies, authorities, and courts having jurisdiction.

26. *Liens*—Charges, security interests, or encumbrances upon Contract-related funds, real property, or personal property.

27. *Milestone*—A principal event in the performance of the Work that the Contract requires Contractor to achieve by an intermediate completion date, or by a time prior to Substantial Completion of all the Work.

28. *Notice of Award*—The written notice by Owner to a Bidder of Owner's acceptance of the Bid.

29. *Notice to Proceed*—A written notice by Owner to Contractor fixing the date on which the Contract Times will commence to run and on which Contractor shall start to perform the Work.

Copyright© 2018 National Society of Professional Engineers, American Council of Engineering Companies, and American Society of Civil Engineers. All rights reserved.

30. *Owner*—The individual or entity with which Contractor has contracted regarding the Work, and which has agreed to pay Contractor for the performance of the Work, pursuant to the terms of the Contract.

31. *Progress Schedule*—A schedule, prepared and maintained by Contractor, describing the sequence and duration of the activities comprising Contractor's plan to accomplish the Work within the Contract Times.

32. *Project*—The total undertaking to be accomplished for Owner by engineers, contractors, and others, including planning, study, design, construction, testing, commissioning, and start-up, and of which the Work to be performed under the Contract Documents is a part.

33. *Project Manual*—The bound documentary information prepared for bidding and constructing the Work. A listing of the contents of the Project Manual, which may be bound in one or more volumes, is contained in the table(s) of contents.

34. *Punch List* - the detailed list of incomplete, unsatisfactory or unacceptable, or defective items that Contractor is required to complete prior to final payment that is generated in accordance with Paragraph 14.06 of the General Conditions."

34. *Resident Project Representative*—The authorized representative of Engineer assigned to assist Engineer at the Site. As used herein, the term Resident Project Representative (RPR) includes any assistants or field staff of Resident Project Representative.

34. *Samples*—Physical examples of materials, equipment, or workmanship that are representative of some portion of the Work and that establish the standards by which such portion of the Work will be judged.

35. *Schedule of Submittals*—A schedule, prepared and maintained by Contractor, of required submittals and the time requirements for Engineer's review of the submittals.

36. *Schedule of Values*—A schedule, prepared and maintained by Contractor, allocating portions of the Contract Price to various portions of the Work and used as the basis for reviewing Contractor's Applications for Payment.

37. *Shop Drawings*—All drawings, diagrams, illustrations, schedules, and other data or information that are specifically prepared or assembled by or for Contractor and submitted by Contractor to illustrate some portion of the Work. Shop Drawings, whether approved or not, are not Drawings and are not Contract Documents.

38. *Site*—Lands or areas indicated in the Contract Documents as being furnished by Owner upon which the Work is to be performed, including rights-of-way and easements, and such other lands or areas furnished by Owner which are designated for the use of Contractor.

39. *Specifications*—The part of the Contract that consists of written requirements for materials, equipment, systems, standards, and workmanship as applied to the Work, and certain administrative requirements and procedural matters applicable to the Work.

40. *Subcontractor*—An individual or entity having a direct contract with Contractor or with any other Subcontractor for the performance of a part of the Work.

Copyright© 2018 National Society of Professional Engineers, American Council of Engineering Companies, and American Society of Civil Engineers. All rights reserved.

41. *Submittal*—A written or graphic document, prepared by or for Contractor, which the Contract Documents require Contractor to submit to Engineer, or that is indicated as a Submittal in the Schedule of Submittals accepted by Engineer. Submittals may include Shop Drawings and Samples; schedules; product data; Owner-delegated designs; sustainable design information; information on special procedures; testing plans; results of tests and evaluations, source quality-control testing and inspections, and field or Site quality-control testing and inspections; warranties and certifications; Suppliers' instructions and reports; records of delivery of spare parts and tools; operations and maintenance data; Project photographic documentation; record documents; and other such documents required by the Contract Documents. Submittals, whether or not approved or accepted by Engineer, are not Contract Documents. Change Proposals, Change Orders, Claims, notices, Applications for Payment, and requests for interpretation or clarification are not Submittals.

42. *Substantial Completion*—The time and date at which the Work (or a specified part thereof) has progressed to the point where, in the opinion of Engineer, the Work (or a specified part thereof) is sufficiently complete, in accordance with the Contract Documents, so that the Work (or a specified part thereof) can be utilized for the purposes for which it is intended. The terms "substantially complete" and "substantially completed" as applied to all or part of the Work refer to Substantial Completion of such Work.

43. *Successful Bidder*—The Bidder to which the Owner makes an award of contract.

44. *Supplementary Conditions*—The part of the Contract that amends or supplements these General Conditions.

45. *Supplier*—A manufacturer, fabricator, supplier, distributor, or vendor having a direct contract with Contractor or with any Subcontractor to furnish materials or equipment to be incorporated in the Work by Contractor or a Subcontractor.

46. *Technical Data*

    a. Those items expressly identified as Technical Data in the Supplementary Conditions, with respect to either (1) existing subsurface conditions at or adjacent to the Site, or existing physical conditions at or adjacent to the Site including existing surface or subsurface structures (except Underground Facilities) or (2) Hazardous Environmental Conditions at the Site.

    b. If no such express identifications of Technical Data have been made with respect to conditions at the Site, then Technical Data is defined, with respect to conditions at the Site under Paragraphs 5.03, 5.04, and 5.06, as the data contained in boring logs, recorded measurements of subsurface water levels, assessments of the condition of subsurface facilities, laboratory test results, and other factual, objective information regarding conditions at the Site that are set forth in any geotechnical, environmental, or other Site or facilities conditions report prepared for the Project and made available to Contractor.

Copyright© 2018 National Society of Professional Engineers, American Council of Engineering Companies, and American Society of Civil Engineers. All rights reserved.

c. Information and data regarding the presence or location of Underground Facilities are not intended to be categorized, identified, or defined as Technical Data, and instead Underground Facilities are shown or indicated on the Drawings.

47. *Underground Facilities*—All active or not-in-service underground lines, pipelines, conduits, ducts, encasements, cables, wires, manholes, vaults, tanks, tunnels, or other such facilities or systems at the Site, including but not limited to those facilities or systems that produce, transmit, distribute, or convey telephone or other communications, cable television, fiber optic transmissions, power, electricity, light, heat, gases, oil, crude oil products, liquid petroleum products, water, steam, waste, wastewater, storm water, other liquids or chemicals, or traffic or other control systems. An abandoned facility or system is not an Underground Facility.

48. *Unit Price Work*—Work to be paid for on the basis of unit prices.

49. *Work*—The entire construction or the various separately identifiable parts thereof required to be provided under the Contract Documents. Work includes and is the result of performing or providing all labor, services, and documentation necessary to produce such construction; furnishing, installing, and incorporating all materials and equipment into such construction; and may include related services such as testing, start-up, and commissioning, all as required by the Contract Documents.

50. Emergency *Work Change Directive*—A written directive to Contractor issued on or after the Effective Date of the Contract, signed by Owner and recommended by Engineer, ordering an addition, deletion, or revision in the Work due to an emergency that prevents the parties from using the Change Order process.

1.02 *Terminology*

A. The words and terms discussed in Paragraphs 1.02.B, C, D, and E are not defined terms that require initial capital letters, but, when used in the Bidding Requirements or Contract Documents, have the indicated meaning.

B. *Intent of Certain Terms or Adjectives*: The Contract Documents include the terms "as allowed," "as approved," "as ordered," "as directed" or terms of like effect or import to authorize an exercise of professional judgment by Engineer. In addition, the adjectives "reasonable," "suitable," "acceptable," "proper," "satisfactory," or adjectives of like effect or import are used to describe an action or determination of Engineer as to the Work. It is intended that such exercise of professional judgment, action, or determination will be solely to evaluate, in general, the Work for compliance with the information in the Contract Documents and with the design concept of the Project as a functioning whole as shown or indicated in the Contract Documents (unless there is a specific statement indicating otherwise). The use of any such term or adjective is not intended to and shall not be effective to assign to Engineer any duty or authority to supervise or direct the performance of the Work, or any duty or authority to undertake responsibility contrary to the provisions of Article 10 or any other provision of the Contract Documents.

C. *Day*: The word "day" means a calendar day of 24 hours measured from midnight to the next midnight, including weekends and legal holidays unless otherwise specifically defined.

Copyright© 2018 National Society of Professional Engineers, American Council of Engineering Companies, and American Society of Civil Engineers. All rights reserved.

D. *Defective*: The word "defective," when modifying the word "Work," refers to Work that is unsatisfactory, faulty, or deficient in that it:

1. does not conform to the Contract Documents;

2. does not meet the requirements of any applicable inspection, reference standard, test, or approval referred to in the Contract Documents; or

3. has been damaged prior to Engineer's recommendation of final payment (unless responsibility for the protection thereof has been assumed by Owner at Substantial Completion in accordance with Paragraph 15.03 or Paragraph 15.04).

E. *Furnish, Install, Perform, Provide*

1. The word "furnish," when used in connection with services, materials, or equipment, means to supply and deliver said services, materials, or equipment to the Site (or some other specified location) ready for use or installation and in usable or operable condition.

2. The word "install," when used in connection with services, materials, or equipment, means to put into use or place in final position said services, materials, or equipment complete and ready for intended use.

3. The words "perform" or "provide," when used in connection with services, materials, or equipment, means to furnish and install said services, materials, or equipment complete and ready for intended use.

4. If the Contract Documents establish an obligation of Contractor with respect to specific services, materials, or equipment, but do not expressly use any of the four words "furnish," "install," "perform," or "provide," then Contractor shall furnish and install said services, materials, or equipment complete and ready for intended use.

F. *Contract Price or Contract Times*: References to a change in "Contract Price or Contract Times" or "Contract Times or Contract Price" or similar, indicate that such change applies to (1) Contract Price, (2) Contract Times, or (3) both Contract Price and Contract Times, as warranted, even if the term "or both" is not expressed.

G. Unless stated otherwise in the Contract Documents, words or phrases that have a well-known technical or construction industry or trade meaning are used in the Contract Documents in accordance with such recognized meaning.

ARTICLE 2—PRELIMINARY MATTERS

2.01 *Delivery of Performance and Payment Bonds; Evidence of Insurance*

A. *Performance and Payment Bonds*: When Contractor delivers the signed counterparts of the Agreement to Owner, Contractor shall also deliver to Owner the performance bond and payment bond (if the Contract requires Contractor to furnish such bonds).

B. *Evidence of Contractor's Insurance*: When Contractor delivers the signed counterparts of the Agreement to Owner, Contractor shall also deliver to Owner, with copies to each additional insured (as identified in the Contract), the certificates, endorsements, and other evidence of insurance required to be provided by Contractor in accordance with Article 6, except to the

Copyright© 2018 National Society of Professional Engineers, American Council of Engineering Companies, and American Society of Civil Engineers. All rights reserved.

extent the Supplementary Conditions expressly establish other dates for delivery of specific insurance policies.

C. Deleted in its entirety.

2.02 *Copies of Documents*

A. Owner shall furnish to Contractor four printed copies of the Contract (including one fully signed counterpart of the Agreement), and one copy in electronic portable document format (PDF). Additional printed copies will be furnished upon request at the cost of reproduction.

B. Owner shall maintain and safeguard at least one original printed record version of the Contract, including Drawings and Specifications signed and sealed by Engineer and other design professionals. Owner shall make such original printed record version of the Contract available to Contractor for review. Owner may delegate the responsibilities under this provision to Engineer.

2.03 *Before Starting Construction*

A. *Preliminary Schedules*: Within 10 days after the Effective Date of the Contract (or as otherwise required by the Contract Documents), Contractor shall submit to Engineer for timely review:

1. a preliminary Progress Schedule indicating the times (numbers of days or dates) for starting and completing the various stages of the Work, including any Milestones specified in the Contract, and identifying the Substantial Completion date;

2. a preliminary Schedule of Submittals; and

3. a preliminary Schedule of Values for all of the Work which includes quantities and prices of items which when added together equal the Contract Price and subdivides the Work into component parts in sufficient detail to serve as the basis for progress payments during performance of the Work. Such prices will include an appropriate amount of overhead and profit applicable to each item of Work.

2.04 *Preconstruction Conference; Designation of Authorized Representatives*

A. Before any Work at the Site is started, a conference attended by Owner, Contractor, Engineer, and others as appropriate will be held to establish a working understanding among the parties as to the Work, and to discuss the schedules referred to in Paragraph 2.03.A, procedures for handling Shop Drawings, Samples, and other Submittals, processing Applications for Payment, electronic or digital transmittals, and maintaining required records.

B. At this conference Owner and Contractor each shall designate, in writing, a specific individual to act as its authorized representative with respect to the services and responsibilities under the Contract. Such individuals shall have the authority to transmit and receive information, render decisions relative to the Contract, and otherwise act on behalf of each respective party.

2.05 *Acceptance of Schedules*

A. At least 10 days before submission of the first Application for Payment a conference, attended by Contractor, Engineer, Owner and others as appropriate, will be held to review the schedules submitted in accordance with Paragraph 2.03.A. No progress payment will be made

Copyright© 2018 National Society of Professional Engineers, American Council of Engineering Companies, and American Society of Civil Engineers. All rights reserved.

to Contractor until acceptable schedules are submitted to and approved by Engineer and Owner.

1. The Progress Schedule will be acceptable to Engineer and Owner if it provides an orderly progression of the Work to completion within the Contract Times and identifies Contractor's critical path sequence of scheduled activities with the earliest start dates for scheduled activities, the earliest finish date for scheduled activities, the latest start date for scheduled activities and latest finish date for scheduled activities. All float in the Progress Schedule shall belong to Owner in order to offset a delay attributable to Owner or its agents. Such acceptance will not impose on Engineer or Owner responsibility for the Progress Schedule, for sequencing, scheduling, or progress of the Work, nor interfere with or relieve Contractor from Contractor's full responsibility therefor.
2. Contractor's Schedule of Submittals will be acceptable to Engineer and Owner if it provides a workable arrangement for reviewing and processing the required submittals.
3. Contractor's Schedule of Values will be acceptable to Engineer and Owner as to form and substance if it provides a reasonable allocation of the Contract Price to the component parts of the Work.
4. If a schedule is not acceptable, Contractor will have an additional 10 days to revise and resubmit the schedule.
5. If Contractor submits a schedule indicating an intention to achieve completion of the Wok prior to contractually required dates, including milestones, no liability of the Owner to the Contractor for any failure of the Contractor to complete early shall be created, whether or not the Owner approves such schedule.
6. The Contractor acknowledges that the Owner may retain the services of a scheduling consultant at the Owner's expense. The Contractor shall cooperate with any such scheduling consultant at the Owner's direction, including without limitation, with regard to the preparation of the Project schedule.

2.06 *Electronic Transmittals*

A. Except as otherwise stated elsewhere in the Contract, the Owner, Engineer, and Contractor may send, and shall accept, Electronic Documents transmitted by Electronic Means.

B. If the Contract does not establish protocols for Electronic Means, then Owner, Engineer, and Contractor shall jointly develop such protocols.

C. Subject to any governing protocols for Electronic Means, when transmitting Electronic Documents by Electronic Means, the transmitting party makes no representations as to long-term compatibility, usability, or readability of the Electronic Documents resulting from the recipient's use of software application packages, operating systems, or computer hardware differing from those used in the drafting or transmittal of the Electronic Documents.

Copyright© 2018 National Society of Professional Engineers, American Council of Engineering Companies, and American Society of Civil Engineers. All rights reserved.

ARTICLE 3—CONTRACT DOCUMENTS: INTENT, REQUIREMENTS, REUSE

3.01 *Intent*

A. The Contract Documents are complementary; what is required by one Contract Document is as binding as if required by all.

B. It is the intent of the Contract Documents to describe a functionally complete Project (or part thereof) to be constructed in accordance with the Contract Documents.

C. Unless otherwise stated in the Contract Documents, if there is a discrepancy between the electronic versions of the Contract Documents (including any printed copies derived from such electronic versions) and the printed record version, the printed record version will govern.

D. The Contract supersedes prior negotiations, representations, and agreements, whether written or oral.

E. Engineer will issue clarifications and interpretations of the Contract Documents as provided herein.

F. Any provision or part of the Contract Documents held to be void or unenforceable under any Law or Regulation will be deemed stricken, and all remaining provisions will continue to be valid and binding upon Owner and Contractor, which agree that the Contract Documents will be reformed to replace such stricken provision or part thereof with a valid and enforceable provision that comes as close as possible to expressing the intention of the stricken provision.

G. Nothing in the Contract Documents creates:

1. any contractual relationship between Owner or Engineer and any Subcontractor, Supplier, or other individual or entity performing or furnishing any of the Work, for the benefit of such Subcontractor, Supplier, or other individual or entity; or

2. any obligation on the part of Owner or Engineer to pay or to see to the payment of any money due any such Subcontractor, Supplier, or other individual or entity, except as may otherwise be required by Laws and Regulations.

3.02 *Reference Standards*

A. *Standards Specifications, Codes, Laws and Regulations*

1. Reference in the Contract Documents to standard specifications, manuals, reference standards, or codes of any technical society, organization, or association, or to Laws or Regulations, whether such reference be specific or by implication, means the standard specification, manual, reference standard, code, or Laws or Regulations in effect at the time of opening of Bids (or on the Effective Date of the Contract if there were no Bids), except as may be otherwise specifically stated in the Contract Documents.

2. No provision of any such standard specification, manual, reference standard, or code, and no instruction of a Supplier, will be effective to change the duties or responsibilities of Owner, Contractor, or Engineer from those set forth in the part of the Contract Documents prepared by or for Engineer. No such provision or instruction shall be effective to assign to Owner or Engineer any duty or authority to supervise or direct the

Copyright© 2018 National Society of Professional Engineers, American Council of Engineering Companies, and American Society of Civil Engineers. All rights reserved.

performance of the Work, or any duty or authority to undertake responsibility inconsistent with the provisions of the part of the Contract Documents prepared by or for Engineer.

3.03 *Reporting and Resolving Discrepancies*

A. *Reporting Discrepancies*

1. *Contractor's Verification of Figures and Field Measurements*: Before undertaking each part of the Work, Contractor shall carefully study the Contract Documents, and check and verify pertinent figures and dimensions therein, particularly with respect to applicable field measurements. Contractor shall promptly report in writing to Engineer any conflict, error, ambiguity, or discrepancy that Contractor discovers, or has actual knowledge of, and shall not proceed with any Work affected thereby until the conflict, error, ambiguity, or discrepancy is resolved by a clarification or interpretation by Engineer, or by an amendment or supplement to the Contract issued pursuant to Paragraph 11.01.

2. *Contractor's Review of Contract Documents*: If, before or during the performance of the Work, Contractor discovers any conflict, error, ambiguity, or discrepancy within the Contract Documents, or between the Contract Documents and (a) any applicable Law or Regulation, (b) actual field conditions, (c) any standard specification, manual, reference standard, or code, or (d) any instruction of any Supplier, then Contractor shall promptly report it to Engineer in writing. Contractor shall not proceed with the Work affected thereby (except in an emergency as required by Paragraph 7.15) until the conflict, error, ambiguity, or discrepancy is resolved, by a clarification or interpretation by Engineer, or by an amendment or supplement to the Contract issued pursuant to Paragraph 11.01.

3. Contractor shall not be liable to Owner or Engineer for failure to report any conflict, error, ambiguity, or discrepancy in the Contract Documents unless Contractor had actual knowledge thereof or could have discovered the conflict or error by careful review of the Contract Documents including pertinent figures and applicable field measurements and dimensions therein..

B. *ResolvingDiscrepancies*

1. Except as may be otherwise specifically stated in the Contract Documents, the provisions of the part of the Contract Documents prepared by or for Engineer take precedence in resolving any conflict, error, ambiguity, or discrepancy between such provisions of the Contract Documents and:

   a. the provisions of any standard specification, manual, reference standard, or code, or the instruction of any Supplier (whether or not specifically incorporated by reference as a Contract Document); or

   b. the provisions of any Laws or Regulations applicable to the performance of the Work (unless such an interpretation of the provisions of the Contract Documents would result in violation of such Law or Regulation).

   c. In the event there is a discrepancy or conflict in the Drawings and Specifications applicable to a particular detail or assembly of the Work, Contractor must promptly seek clarification from Engineer before proceeding with the Work. Subject to Paragraph 3.03.A.3. above, if Contractor proceeds with the Work without seeking such clarification, Contractor will be

Copyright© 2018 National Society of Professional Engineers, American Council of Engineering Companies, and American Society of Civil Engineers. All rights reserved.

bound by the stricter and more expensive detail or assembly. Contractor agrees and recognizes that in agreeing to the Contract Price it has factored in the costs associated with installing the stricter and more expensive detail or assembly.

3.04 *Requirements of the Contract Documents*

A. During the performance of the Work and until final payment, Contractor and Owner shall submit to the Engineer in writing all matters in question concerning the requirements of the Contract Documents (sometimes referred to as requests for information or interpretation—RFIs), or relating to the acceptability of the Work under the Contract Documents, as soon as possible after such matters arise. Engineer will be the initial interpreter of the requirements of the Contract Documents, and judge of the acceptability of the Work.

B. Engineer will, with reasonable promptness, render a written clarification, interpretation, or decision on the issue submitted, or initiate an amendment or supplement to the Contract Documents. Engineer's written clarification, interpretation, or decision will be final and binding on Contractor, unless it appeals by submitting a Change Proposal, and on Owner, unless it appeals by filing a Claim.

C. If a submitted matter in question concerns terms and conditions of the Contract Documents that do not involve (1) the performance or acceptability of the Work under the Contract Documents, (2) the design (as set forth in the Drawings, Specifications, or otherwise), or (3) other engineering or technical matters, then Engineer will promptly notify Owner and Contractor in writing that Engineer is unable to provide a decision or interpretation. If Owner and Contractor are unable to agree on resolution of such a matter in question, either party may pursue resolution as provided in Article 12.

3.05 *Reuse of Documents*

A. Contractor and its Subcontractors and Suppliers shall not:

1. have or acquire any title to or ownership rights in any of the Drawings, Specifications, or other documents (or copies of any thereof) prepared by or bearing the seal of Engineer or its consultants, including electronic media versions, or reuse any such Drawings, Specifications, other documents, or copies thereof on extensions of the Project or any other project without written consent of Owner and Engineer and specific written verification or adaptation by Engineer; or

2. have or acquire any title or ownership rights in any other Contract Documents, reuse any such Contract Documents for any purpose without Owner's express written consent, or violate any copyrights pertaining to such Contract Documents.

B. The prohibitions of this Paragraph 3.05 will survive final payment, or termination of the Contract. Nothing herein precludes Contractor from retaining copies of the Contract Documents for record purposes.

Copyright© 2018 National Society of Professional Engineers, American Council of Engineering Companies, and American Society of Civil Engineers. All rights reserved.

ARTICLE 4—COMMENCEMENT AND PROGRESS OF THE WORK

4.01 *Commencement of Contract Times; Notice to Proceed*

A. The Contract Times shall not commence to run and Contractor shall not commence the Work until Owner issues a Notice to Proceed . A Notice to Proceed may be issued by Owner at any time after the Effective Date of the Contract.

4.02 *Starting the Work*

A. Contractor shall start to perform the Work on the date specified in the Notice to Proceed which shall cause the Contract Times to commence to run. No Work may be done at the Site prior to such date.

4.03 *Reference Points*

A. Owner shall provide engineering surveys to establish reference points for construction which in Engineer's judgment are necessary to enable Contractor to proceed with the Work. Contractor shall be responsible for laying out the Work, shall protect and preserve the established reference points and property monuments, and shall make no changes or relocations without the prior written approval of Owner. Contractor shall report to Engineer whenever any reference point or property monument is lost or destroyed or requires relocation because of necessary changes in grades or locations, and shall be responsible for the accurate replacement or relocation of such reference points or property monuments by professionally qualified personnel.

B. Contractor shall lay-out and verify all field dimensions and measurements at the Site before proceeding with any portion of the Work.

4.04 *Progress Schedule*

A. Contractor shall adhere to the Progress Schedule established in accordance with Paragraph 2.05 as it may be adjusted from time to time as provided below.

1. Contractor shall submit to Engineer for acceptance (to the extent indicated in Paragraph 2.05) proposed adjustments in the Progress Schedule that will not result in changing the Contract Times.

2. Proposed adjustments in the Progress Schedule that will change the Contract Times must be submitted in accordance with the requirements of Article 11.

B. Contractor shall carry on the Work and adhere to the Progress Schedule during all disputes or disagreements with Owner. No Work will be delayed or postponed pending resolution of any disputes or disagreements, or during any appeal process, except as permitted by Paragraph 16.04, or as Owner and Contractor may otherwise agree in writing.

4.05 *Delays in Contractor's Progress*

A. If Owner, Engineer, or anyone for whom Owner is responsible, delays, disrupts, or interferes with the performance or progress of the Work, then Contractor shall only be entitled to an equitable adjustment in Contract Times.

Copyright© 2018 National Society of Professional Engineers, American Council of Engineering Companies, and American Society of Civil Engineers. All rights reserved.

B. Contractor shall not be entitled to an adjustment in Contract Price or Contract Times for delay, disruption, or interference caused by or within the control of Contractor. Delay, disruption, and interference attributable to and within the control of a Subcontractor or Supplier shall be deemed to be within the control of Contractor.

C. If Contractor's performance or progress is delayed, disrupted, or interfered with by unanticipated causes not the fault of and beyond the control of Owner, Contractor, and those for which they are responsible, then Contractor shall be entitled to an equitable adjustment in Contract Times. Such an adjustment will be Contractor's sole and exclusive remedy for the delays, disruption, and interference described in this paragraph. Unanticipated causes of delay, disruption, or interference that may give rise to an adjustment in Contract Times under this paragraph include but are not limited to the following:

1. Severe and unavoidable natural catastrophes such as fires, floods, epidemics, and earthquakes;

2. Abnormal weather conditions not anticipated or customary in Volusia County;

3. Acts or failures to act of third-party utility owners or other third-party entities (other than those third-party utility owners or other third-party entities performing other work at or adjacent to the Site as arranged by or under contract with Owner, as contemplated in Article 8); and

4. Acts of war or terrorism.

D. Contractor's entitlement to an adjustment of Contract Times is limited as follows:

1. Contractor's entitlement to an adjustment of the Contract Times is conditioned on the delay, disruption, or interference adversely affecting an activity on the critical path to completion of the Work, as of the time of the delay, disruption, or interference.

2. Deleted in its entirety.

3. Adjustments of Contract Times are subject to the provisions of Article 11.

E. Each Contractor request or Change Proposal seeking an increase in Contract Times must be supplemented by supporting data that sets forth in detail the following:

1. The circumstances that form the basis for the requested adjustment;

2. The date upon which each cause of delay, disruption, or interference began to affect the progress of the Work;

3. The date upon which each cause of delay, disruption, or interference ceased to affect the progress of the Work;

4. The number of days' increase in Contract Times claimed as a consequence of each such cause of delay, disruption, or interference; and

5. Deleted in its entirety.

Contractor shall also furnish such additional supporting documentation as Owner or Engineer may require including, where appropriate, a revised progress schedule indicating all the activities affected by the delay, disruption, or interference, and an explanation of the effect of the delay, disruption, or interference on the critical path to completion of the Work.

Copyright© 2018 National Society of Professional Engineers, American Council of Engineering Companies, and American Society of Civil Engineers. All rights reserved.

F. Delays, disruption, and interference to the performance or progress of the Work resulting from the existence of a differing subsurface or physical condition, an Underground Facility that was not shown or indicated by the Contract Documents, or not shown or indicated with reasonable accuracy, and those resulting from Hazardous Environmental Conditions, are governed by Article 5, together with the provisions of Paragraphs 4.05.D and 4.05.E.

G. Paragraph 8.03 addresses delays, disruption, and interference to the performance or progress of the Work resulting from the performance of certain other work at or adjacent to the Site.

ARTICLE 5—SITE; SUBSURFACE AND PHYSICAL CONDITIONS; HAZARDOUS ENVIRONMENTAL CONDITIONS

5.01 *Availability of Lands*

A. Owner shall furnish the Site. Owner shall notify Contractor in writing of any encumbrances or restrictions not of general application but specifically related to use of the Site with which Contractor must comply in performing the Work.

B. Deleted in its entirety.

C. Contractor shall provide for all additional lands and access thereto that may be required for temporary construction facilities, staging, or storage of materials and equipment. Contractor shall have the obligation to restore the additional lands to their original condition.

5.02 *Use of Site and Other Areas*

A. *Limitation on Use of Site and Other Areas*

1. Contractor shall confine construction equipment, temporary construction facilities, the storage of materials and equipment, and the operations of workers to the Site, adjacent areas that Contractor has arranged to use through construction easements or otherwise, and other adjacent areas permitted by Laws and Regulations, and shall not unreasonably encumber the Site and such other adjacent areas with construction equipment or other materials or equipment. Contractor shall assume full responsibility for (a) damage to the Site; (b) damage to any such other adjacent areas used for Contractor's operations; (c) damage to any other adjacent land or areas, or to improvements, structures, utilities, or similar facilities located at such adjacent lands or areas; and (d) for injuries and losses sustained by the owners or occupants of any such land or areas; provided that such damage or injuries result from the performance of the Work or from other actions or conduct of the Contractor or those for which Contractor is responsible.

2. If a damage or injury claim is made by the owner or occupant of any such land or area because of the performance of the Work, or because of other actions or conduct of the Contractor or those for which Contractor is responsible, Contractor shall (a) take immediate corrective or remedial action as required by Paragraph 7.13, or otherwise; (b) promptly attempt to settle the claim as to all parties through negotiations with such owner or occupant, or otherwise resolve the claim by arbitration or other dispute resolution proceeding, or in a court of competent jurisdiction; and (c) to the fullest extent permitted by Laws and Regulations, indemnify and hold harmless Owner and Engineer, and the officers, directors, members, partners, employees, agents, consultants and

Copyright© 2018 National Society of Professional Engineers, American Council of Engineering Companies, and American Society of Civil Engineers. All rights reserved.

subcontractors of each and any of them, from and against any such claim, and against all costs, losses, and damages (including but not limited to all fees and charges of engineers, architects, attorneys, and other professionals and all court or arbitration or other dispute resolution costs) arising out of or relating to any claim or action, legal or equitable, brought by any such owner or occupant against Owner, Engineer, or any other party indemnified hereunder to the extent caused directly or indirectly, in whole or in part by, or based upon, Contractor's performance of the Work, or because of other actions or conduct of the Contractor or those for which Contractor is responsible.

B. *Removal of Debris During Performance of the Work*: During the progress of the Work the Contractor shall keep the Site and other adjacent areas free from accumulations of waste materials, rubbish, and other debris. The Contractor shall prevent paint, mortar, and concrete splatter on concrete sidewalks and stairwell pads. Any such splatter shall be immediately removed so no evidence of splatter remains. All construction debris shall be removed in a timely manner. Surrounding graded and grassed areas shall be regularly magnetically scanned to collect miscellaneous nails and other sharp objects; the Contractor shall remove such objects from the construction site. Removal and disposal of such waste materials, rubbish, and other debris will conform to applicable Laws and Regulations.

C. *Cleaning*: Prior to Substantial Completion of the Work Contractor shall clean the Site and the Work and make it ready for utilization by Owner. Concrete and ceramic surfaces shall be cleaned and washed. Woodwork and resilient flooring shall be dusted and cleaned. Sash, fixtures and equipment shall be thoroughly cleaned. Stains, spots, dust. marks and smears shall be removed from all surfaces. Hardware and metal surfaces shall be cleaned and polished. Glass and plastic surfaces shall be thoroughly cleaned by professional window cleaners. All damaged, broken or scratched glass or plastic shall be replaced by the Contractor at the Contractor's expense. At the completion of the Work Contractor shall remove from the Site and adjacent areas all tools, appliances, construction equipment and machinery, and surplus materials and shall restore to original condition all property not designated for alteration by the Contract Documents.

D. *Loading of Structures*: Contractor shall not load nor permit any part of any structure to be loaded in any manner that will endanger the structure, nor shall Contractor subject any part of the Work or adjacent structures or land to stresses or pressures that will endanger them.

5.03 *Subsurface and Physical Conditions*

A. *Reports and Drawings*: The Supplementary Conditions identify:

1. Those reports of explorations and tests of subsurface conditions at or adjacent to the Site that contain Technical Data;

2. Those drawings of existing physical conditions at or adjacent to the Site, including those drawings depicting existing surface or subsurface structures at or adjacent to the Site (except Underground Facilities), that contain Technical Data; and

3. Technical Data contained in such reports and drawings.

B. *Underground Facilities*: Underground Facilities are shown or indicated on the Drawings, pursuant to Paragraph 5.05, and not in the drawings referred to in Paragraph 5.03.A.

Copyright© 2018 National Society of Professional Engineers, American Council of Engineering Companies, and American Society of Civil Engineers. All rights reserved.

Information and data regarding the presence or location of Underground Facilities are not intended to be categorized, identified, or defined as Technical Data.

C. *Reliance by Contractor on Technical Data*: Contractor may rely upon the accuracy of the Technical Data expressly identified in the Supplementary Conditions with respect to such reports and drawings, but such reports and drawings are not Contract Documents and shall under no circumstances relieve Contractor from visiting the Site and becoming familiar with and satisfied as to the general, local, and Site conditions that may affect cost, progress, and performance of the Work. If no such express identification has been made, then Contractor may rely upon the accuracy of the Technical Data as defined in Paragraph 1.01.A.46.b.

D. *Limitations of Other Data and Documents*: Except for such reliance on Technical Data, Contractor may not rely upon or make any claim against Owner or Engineer, or any of their officers, directors, members, partners, employees, agents, consultants, or subcontractors, with respect to:

1. the completeness of such reports and drawings for Contractor's purposes, including, but not limited to, any aspects of the means, methods, techniques, sequences, and procedures of construction to be employed by Contractor, and safety precautions and programs incident thereto;

2. other data, interpretations, opinions, and information contained in such reports or shown or indicated in such drawings;

3. the contents of other Site-related documents made available to Contractor, such as record drawings from other projects at or adjacent to the Site, or Owner's archival documents concerning the Site; or

4. any Contractor interpretation of or conclusion drawn from any Technical Data or any such other data, interpretations, opinions, or information.

5.04 *Differing Subsurface or Physical Conditions*

A. *Notice by Contractor*: If Contractor believes that any subsurface or physical condition that is uncovered or revealed at the Site:

1. is of such a nature as to establish that any Technical Data on which Contractor is entitled to rely as provided in Paragraph 5.03 is materially inaccurate;

2. is of such a nature as to require a change in the Drawings or Specifications;

3. differs materially from that shown or indicated in the Contract Documents; or

4. is of an unusual nature, and differs materially from conditions ordinarily encountered and generally recognized as inherent in work of the character provided for in the Contract Documents;

then Contractor shall, promptly after first becoming aware thereof and before further disturbing the subsurface or physical conditions or performing any Work in connection therewith (except in an emergency as required by Paragraph 7.15), notify Owner and Engineer in writing about such condition within 5 days. Contractor shall not further disturb such condition or perform any Work in connection therewith (except with respect to an emergency) until receipt of a written statement permitting Contractor to do so.

Copyright© 2018 National Society of Professional Engineers, American Council of Engineering Companies, and American Society of Civil Engineers. All rights reserved.

B. *Engineer's Review*: After receipt of written notice as required by the preceding paragraph, Engineer will promptly review the subsurface or physical condition in question; determine whether it is necessary for Owner to obtain additional exploration or tests with respect to the condition; conclude whether the condition falls within any one or more of the differing site condition categories in Paragraph 5.04.A; obtain any pertinent cost or schedule information from Contractor; prepare recommendations to Owner regarding the Contractor's resumption of Work in connection with the subsurface or physical condition in question and the need for any change in the Drawings or Specifications; and advise Owner in writing of Engineer's findings, conclusions, and recommendations.

C. *Owner's Statement to Contractor Regarding Site Condition*: After receipt of Engineer's written findings, conclusions, and recommendations, Owner shall issue a written statement to Contractor (with a copy to Engineer) regarding the subsurface or physical condition in question, addressing the resumption of Work in connection with such condition, indicating whether any change in the Drawings or Specifications will be made, and adopting or rejecting Engineer's written findings, conclusions, and recommendations, in whole or in part.

D. *Early Resumption of Work*: If at any time Engineer determines that Work in connection with the subsurface or physical condition in question may resume prior to completion of Engineer's review or Owner's issuance of its statement to Contractor, because the condition in question has been adequately documented, and analyzed on a preliminary basis, then the Engineer may at its discretion instruct Contractor to resume such Work.

E. *Possible Price and Times Adjustments*

1. Contractor shall be entitled to an equitable adjustment in Contract Price or Contract Times, to the extent that the existence of a differing subsurface or physical condition, or any related delay, disruption, or interference, causes an increase or decrease in Contractor's cost of, or time required for, performance of the Work; subject, however, to the following:

    a. Such condition must fall within any one or more of the categories described in Paragraph 5.04.A;

    b. With respect to Work that is paid for on a unit price basis, any adjustment in Contract Price will be subject to the provisions of Paragraph 13.03; and,

    c. Contractor's entitlement to an adjustment of the Contract Times is subject to the provisions of Paragraphs 4.05.D and 4.05.E.

2. Contractor shall not be entitled to any adjustment in the Contract Price or Contract Times with respect to a subsurface or physical condition if:

    a. Contractor knew of the existence of such condition at the time Contractor made a commitment to Owner with respect to Contract Price and Contract Times by the submission of a Bid or becoming bound under a negotiated contract, or otherwise;

    b. The existence of such condition reasonably could have been discovered or revealed as a result of any examination, investigation, exploration, test, or study of the Site and contiguous areas expressly required by the Bidding Requirements or Contract

Copyright© 2018 National Society of Professional Engineers, American Council of Engineering Companies, and American Society of Civil Engineers. All rights reserved.

Documents to be conducted by or for Contractor prior to Contractor's making such commitment; or

c. Contractor failed to give the written notice required by Paragraph 5.04.A.

3. If Owner and Contractor agree regarding Contractor's entitlement to and the amount or extent of any adjustment in the Contract Price or Contract Times, then any such adjustment will be set forth in a Change Order.

4. Contractor may submit a Change Proposal regarding its entitlement to or the amount or extent of any adjustment in the Contract Price or Contract Times, no later than 30 days after Owner's issuance of the Owner's written statement to Contractor regarding the subsurface or physical condition in question.

F. *Underground Facilities; Hazardous Environmental Conditions*: Paragraph 5.05 governs rights and responsibilities regarding the presence or location of Underground Facilities. Paragraph 5.06 governs rights and responsibilities regarding Hazardous Environmental Conditions. The provisions of Paragraphs 5.03 and 5.04 are not applicable to the presence or location of Underground Facilities, or to Hazardous Environmental Conditions.

5.05 *Underground Facilities*

A. *Contractor's Responsibilities*: Unless it is otherwise expressly provided in the Supplementary Conditions, the cost of all of the following are included in the Contract Price, and Contractor shall have full responsibility for:

1. reviewing and checking all information and data regarding existing Underground Facilities at the Site;

2. complying with applicable state and local utility damage prevention Laws and Regulations;

3. verifying the actual location of those Underground Facilities shown or indicated in the Contract Documents as being within the area affected by the Work, by exposing such Underground Facilities during the course of construction;

4. coordination of the Work with the owners (including Owner) of such Underground Facilities, during construction; and

5. the safety and protection of all existing Underground Facilities at the Site, and repairing any damage thereto resulting from the Work.

B. *Notice by Contractor*: If Contractor believes that an Underground Facility that is uncovered or revealed at the Site was not shown or indicated on the Drawings, or was not shown or indicated on the Drawings with reasonable accuracy, then Contractor shall, promptly after first becoming aware thereof and before further disturbing conditions affected thereby or performing any Work in connection therewith (except in an emergency as required by Paragraph 7.15), notify Owner and Engineer in writing regarding such Underground Facility within 5 days.

Copyright© 2018 National Society of Professional Engineers, American Council of Engineering Companies, and American Society of Civil Engineers. All rights reserved.

C. *Engineer's Review*: Engineer will:

1. promptly review the Underground Facility and conclude whether such Underground Facility was not shown or indicated on the Drawings, or was not shown or indicated with reasonable accuracy;

2. identify and communicate with the owner of the Underground Facility; prepare recommendations to Owner (and if necessary issue any preliminary instructions to Contractor) regarding the Contractor's resumption of Work in connection with the Underground Facility in question;

3. obtain any pertinent cost or schedule information from Contractor; determine the extent, if any, to which a change is required in the Drawings or Specifications to reflect and document the consequences of the existence or location of the Underground Facility; and

4. advise Owner in writing of Engineer's findings, conclusions, and recommendations.

During such time, Contractor shall be responsible for the safety and protection of such Underground Facility.

D. *Owner's Statement to Contractor Regarding Underground Facility*: After receipt of Engineer's written findings, conclusions, and recommendations, Owner shall issue a written statement to Contractor (with a copy to Engineer) regarding the Underground Facility in question addressing the resumption of Work in connection with such Underground Facility, indicating whether any change in the Drawings or Specifications will be made, and adopting or rejecting Engineer's written findings, conclusions, and recommendations in whole or in part.

E. *Early Resumption of Work*: If at any time Engineer determines that Work in connection with the Underground Facility may resume prior to completion of Engineer's review or Owner's issuance of its statement to Contractor, because the Underground Facility in question and conditions affected by its presence have been adequately documented, and analyzed on a preliminary basis, then the Engineer may at its discretion instruct Contractor to resume such Work.

F. *Possible Price and Times Adjustments*

1. Contractor shall be entitled to an equitable adjustment in the Contract Price or Contract Times, to the extent that any existing Underground Facility at the Site that was not shown or indicated on the Drawings, or was not shown or indicated with reasonable accuracy, or any related delay, disruption, or interference, causes an increase or decrease in Contractor's cost of, or time required for, performance of the Work; subject, however, to the following:

   a. With respect to Work that is paid for on a unit price basis, any adjustment in Contract Price will be subject to the provisions of Paragraph 13.03;

   b. Contractor's entitlement to an adjustment of the Contract Times is subject to the provisions of Paragraphs 4.05.D and 4.05.E; and

   c. Contractor gave the notice required in Paragraph 5.05.B.

Copyright© 2018 National Society of Professional Engineers, American Council of Engineering Companies, and American Society of Civil Engineers. All rights reserved.

2. If Owner and Contractor agree regarding Contractor's entitlement to and the amount or extent of any adjustment in the Contract Price or Contract Times, then any such adjustment will be set forth in a Change Order.

3. Contractor may submit a Change Proposal regarding its entitlement to or the amount or extent of any adjustment in the Contract Price or Contract Times, no later than 30 days after Owner's issuance of the Owner's written statement to Contractor regarding the Underground Facility in question.

4. The information and data shown or indicated on the Drawings with respect to existing Underground Facilities at the Site is based on information and data (a) furnished by the owners of such Underground Facilities, or by others, (b) obtained from available records, or (c) gathered in an investigation conducted in accordance with the current edition of ASCE 38, Standard Guideline for the Collection and Depiction of Existing Subsurface Utility Data, by the American Society of Civil Engineers. If such information or data is incorrect or incomplete, Contractor's remedies are limited to those set forth in this Paragraph 5.05.F.

5.06 *Hazardous Environmental Conditions at Site*

A. *Reports and Drawings*: The Supplementary Conditions identify:

1. those reports known to Owner relating to Hazardous Environmental Conditions that have been identified at or adjacent to the Site;

2. drawings known to Owner relating to Hazardous Environmental Conditions that have been identified at or adjacent to the Site; and

3. Technical Data contained in such reports and drawings.

B. *Reliance by Contractor on Technical Data Authorized*: Contractor may rely upon the accuracy of the Technical Data expressly identified in the Supplementary Conditions with respect to such reports and drawings, but such reports and drawings are not Contract Documents. If no such express identification has been made, then Contractor may rely on the accuracy of the Technical Data as defined in Paragraph 1.01.A.46.b. Except for such reliance on Technical Data, Contractor may not rely upon or make any claim against Owner or Engineer, or any of their officers, directors, members, partners, employees, agents, consultants, or subcontractors, with respect to:

1. the completeness of such reports and drawings for Contractor's purposes, including, but not limited to, any aspects of the means, methods, techniques, sequences and procedures of construction to be employed by Contractor, and safety precautions and programs incident thereto;

2. other data, interpretations, opinions, and information contained in such reports or shown or indicated in such drawings; or

3. any Contractor interpretation of or conclusion drawn from any Technical Data or any such other data, interpretations, opinions or information.

C. Contractor shall not be responsible for removing or remediating any Hazardous Environmental Condition encountered, uncovered, or revealed at the Site unless such

Copyright© 2018 National Society of Professional Engineers, American Council of Engineering Companies, and American Society of Civil Engineers. All rights reserved.

removal or remediation is expressly identified in the Contract Documents to be within the scope of the Work.

D. Contractor shall be responsible for controlling, containing, and duly removing all Constituents of Concern brought to the Site by Contractor, Subcontractors, Suppliers, or anyone else for whom Contractor is responsible, and for any associated costs; and for the costs of removing and remediating any Hazardous Environmental Condition created by the presence of any such Constituents of Concern.

E. If Contractor encounters, uncovers, or reveals a Hazardous Environmental Condition whose removal or remediation is not expressly identified in the Contract Documents as being within the scope of the Work, or if Contractor or anyone for whom Contractor is responsible creates a Hazardous Environmental Condition, then Contractor shall immediately: (1) secure or otherwise isolate such condition; (2) stop all Work in connection with such condition and in any area affected thereby (except in an emergency as required by Paragraph 7.15); and (3) notify Owner and Engineer (and promptly thereafter confirm such notice in writing) within 5 days of first becoming aware of the condition. Owner shall promptly consult with Engineer concerning the necessity for Owner to retain a qualified expert to evaluate such condition or take corrective action, if any. Promptly after consulting with Engineer, Owner shall take such actions as are necessary to permit Owner to timely obtain required permits and provide Contractor the written notice required by Paragraph 5.06.F. If Contractor or anyone for whom Contractor is responsible created the Hazardous Environmental Condition in question, then Owner may remove and remediate the Hazardous Environmental Condition, and impose a set-off against payments to account for the associated costs.

F. Contractor shall not resume Work in connection with such Hazardous Environmental Condition or in any affected area until after Owner has obtained any required permits related thereto, and delivered written notice to Contractor either (1) specifying that such condition and any affected area is or has been rendered safe for the resumption of Work, or (2) specifying any special conditions under which such Work may be resumed safely. An equitable adjustment shall be made in the Contract Price or Contract Time, or both, to the extent that (i) they are attributable to the existence or location of any Hazardous Environmental Condition that was not shown or indicated or not shown or indicated with reasonable accuracy in the Contract Documents or a report listed in the Supplemental Conditions, (ii) Contractor did not know of and could not reasonably have been expected to be aware of or to have anticipated the Hazardous Environmental Conditions, (iii) Contractor did not negligently, recklessly, or intentionally cause the Hazardous Environmental Condition, and (iv) Contractor notifies Owner and Engineer of such condition within 5 days after first becoming aware of such condition.

G. If Owner and Contractor cannot agree as to entitlement to or on the amount or extent, if any, of any adjustment in Contract Price or Contract Times, as a result of such Work stoppage, such special conditions under which Work is agreed to be resumed by Contractor, or any costs or expenses incurred in response to the Hazardous Environmental Condition, then within 30 days of Owner's written notice regarding the resumption of Work, Contractor may submit a Change Proposal, or Owner may impose a set-off. Entitlement to any such adjustment is subject to the provisions of Paragraphs 4.05.D, 4.05.E, 11.07, and 11.08.

Copyright© 2018 National Society of Professional Engineers, American Council of Engineering Companies, and American Society of Civil Engineers. All rights reserved.

H. If, after receipt of such written notice, Contractor does not agree to resume such Work based on a reasonable belief it is unsafe, or does not agree to resume such Work under such special conditions, then Owner may order the portion of the Work that is in the area affected by such condition to be deleted from the Work, following the contractual change procedures in Article 11. Owner may have such deleted portion of the Work performed by Owner's own forces or others in accordance with Article 8.

I. Deleted in its entirety.

J. Deleted in its entirety..

K. Deleted in its entirety.

ARTICLE 6—BONDS AND INSURANCE

6.01 *Performance, Payment, and Other Bonds*

A. Contractor shall furnish a payment and performance bond in accordance with Sec. 255.05, Florida Statutes, in an amount at least equal to the Contract Price, as security for the faithful performance and payment of Contractor's obligations under the Contract. These bonds must remain in effect until one year after the date when final payment becomes due or until completion of the correction period specified in Paragraph 15.08, whichever is later, except as provided otherwise by Laws or Regulations, the terms of a prescribed bond form, the Supplementary Conditions, or other provisions of the Contract. The obligations, duties, responsibilities, and requirements of Contractor set forth in this Contract shall be incorporated into Contractor's performance bond.

B. Contractor shall also furnish such other bonds (if any) as are required by the Supplementary Conditions or other provisions of the Contract.

C. All bonds must be in the form included in the Bidding Documents or otherwise specified by Owner prior to execution of the Contract~~,~~. A bond signed by an agent or attorney-in-fact must be accompanied by a certified copy of that individual's authority to bind the surety. The evidence of authority must show that it is effective on the date the agent or attorney-in-fact signed the accompanying bond. The payment and performance bonds shall be recorded in the public records of Volusia County, Florida.

D. Contractor shall obtain the required bonds from surety companies that are duly licensed or authorized, in Florida, to issue bonds in the required amounts.

E. If the surety on a bond furnished by Contractor is declared bankrupt or becomes insolvent, or the surety ceases to meet the requirements above, then Contractor shall promptly notify Owner and Engineer in writing and shall, within 20 days after the event giving rise to such notification, provide another bond and surety, both of which must comply with the bond and surety requirements above.

F. Prior to the date of commencement as set forth in the Notice to Proceed, if Contractor has failed to obtain a required bond, Owner may exclude the Contractor from the Site and exercise Owner's termination rights under Article 16.

Copyright© 2018 National Society of Professional Engineers, American Council of Engineering Companies, and American Society of Civil Engineers. All rights reserved.

G. Upon request to Owner from any Subcontractor, Supplier, or other person or entity claiming to have furnished labor, services, materials, or equipment used in the performance of the Work, Owner shall provide a copy of the payment bond to such person or entity.

H. Upon request to Contractor from any Subcontractor, Supplier, or other person or entity claiming to have furnished labor, services, materials, or equipment used in the performance of the Work, Contractor shall provide a copy of the payment bond to such person or entity.

6.02 *Insurance—General Provisions*

A. Contractor shall obtain and maintain insurance as required in this article.

B. All insurance required by the Contract to be purchased and maintained by Contractor shall be obtained from insurance companies that are duly licensed or authorized in the State of Florida to issue insurance policies for the required limits and coverages. Unless a different standard is indicated in the Supplementary Conditions, all companies that provide insurance policies required under this Contract shall have an A.M. Best rating of A-VII or better.

C. Alternative forms of insurance coverage, including but not limited to self-insurance and "Occupational Accident and Excess Employer's Indemnity Policies," are not sufficient to meet the insurance requirements of this Contract, unless expressly allowed in the Supplementary Conditions.

D. Contractor shall deliver to Owner, with copies to each additional insured identified in the Contract, certificates of insurance and endorsements establishing that Contractor has obtained and is maintaining the policies and coverages required by the Contract. Upon request by Owner or any other insured, Contractor shall also furnish other evidence of such required insurance, including but not limited to copies of policies, documentation of applicable self-insured retentions (if allowed) and deductibles, full disclosure of all relevant exclusions, and evidence of insurance required to be purchased and maintained by Subcontractors or Suppliers. In any documentation furnished under this provision, Contractor, Subcontractors, and Suppliers may block out (redact) (1) any confidential premium or pricing information and (2) any wording specific to a project or jurisdiction other than those applicable to this Contract.

E. Deleted in its entirety.

F. Failure of Owner to demand such certificates or other evidence of the Contractor's full compliance with these insurance requirements, or failure of Owner to identify a deficiency in compliance from the evidence provided, will not be construed as a waiver of the Contractor's obligation to obtain and maintain such insurance.

G. In addition to the liability insurance required to be provided by Contractor, the Owner, at Owner's option, may purchase and maintain Owner's own liability insurance. Owner's liability policies, if any, operate separately and independently from policies required to be provided by Contractor, and Contractor cannot rely upon Owner's liability policies for any of Contractor's obligations to the Owner, Engineer, or third parties.

Copyright© 2018 National Society of Professional Engineers, American Council of Engineering Companies, and American Society of Civil Engineers. All rights reserved.

H. Contractor shall require:

1. Subcontractors to purchase and maintain worker's compensation, commercial general liability, and other insurance that is appropriate for their participation in the Project, and to name as additional insureds Owner and Engineer (and any other individuals or entities identified in the Supplementary Conditions as additional insureds on Contractor's liability policies) on each Subcontractor's commercial general liability insurance policy; and

2. Suppliers to purchase and maintain insurance that is appropriate for their participation in the Project.

I. If Contractor does not purchase or maintain the insurance required by the Contract, Contractor shall notify the Owner in writing of such failure to purchase prior to the start of the Work, or of such failure to maintain prior to any change in the required coverage.

J. If Contractor has failed to obtain and maintain required insurance, Contractor's entitlement to enter or remain at the Site will end immediately, and Owner may impose an appropriate set-off against payment for any associated costs (including but not limited to the cost of purchasing necessary insurance coverage), and exercise Owner's termination rights under Article 16.

K. Without prejudice to any other right or remedy, if Contractor has failed to obtain required insurance, the Owner may elect (but is in no way obligated) to obtain equivalent insurance to protect Owner's interests at the expense of the Contactor who was required to provide such coverage, and the Contract Price will be adjusted accordingly.

L. Owner does not represent that insurance coverage and limits established in this Contract necessarily will be adequate to protect Contractor or Contractor's interests. Contractor is responsible for determining whether such coverage and limits are adequate to protect its interests, and for obtaining and maintaining any additional insurance that Contractor deems necessary.

M. The insurance and insurance limits required herein will not be deemed as a limitation on Contractor's liability, or that of its Subcontractors or Suppliers, under the indemnities granted to Owner and other individuals and entities in the Contract or otherwise.

N. All the policies of insurance required to be purchased and maintained under this Contract will contain a provision or endorsement that the coverage afforded will not be canceled, or renewal refused, until at least 10 days prior written notice has been given to the purchasing policyholder. Within three days of receipt of any such written notice, the purchasing policyholder shall provide a copy of the notice to each other insured and Engineer.

6.03 *Contractor's Insurance*

A. *Required Insurance*: Contractor shall purchase and maintain Worker's Compensation, Commercial General Liability, and other insurance pursuant to the specific requirements of the Solicitation / ITB document referenced in Article 7 of the Agreement.

B. *General Provisions*: The policies of insurance required by this Paragraph 6.03 as supplemented must:

1. include at least the specific coverages required;

Copyright© 2018 National Society of Professional Engineers, American Council of Engineering Companies, and American Society of Civil Engineers. All rights reserved.

2. be written for not less than the limits provided, or those required by Laws or Regulations, whichever is greater;

3. remain in effect at least until the Work is complete (as set forth in Paragraph 15.06.D), and longer if expressly required elsewhere in this Contract, and at all times thereafter when Contractor may be correcting, removing, or replacing defective Work as a warranty or correction obligation, or otherwise, or returning to the Site to conduct other tasks arising from the Contract;

4. apply with respect to the performance of the Work, whether such performance is by Contractor, any Subcontractor or Supplier, or by anyone directly or indirectly employed by any of them to perform any of the Work, or by anyone for whose acts any of them may be liable;

5. include completed operations coverage:

   a. Such insurance shall remain in effect for 10 years after Substantial Completion.

   b. Contractor shall furnish Owner and each additional insured identified in the Supplementary Conditions to whom a certificate of insurance has been issued, evidence satisfactory to Owner and any such additional insured of continuation of such insurance at final payment.

6. make the Contractor solely responsible for any insurance deductible or self-insured retention.

7. include all necessary endorsements to support the stated requirements.

C. *Additional Insureds*: The Contractor's commercial general liability, automobile liability, employer's liability, umbrella or excess, pollution liability, and unmanned aerial vehicle liability policies, if required by this Contract, must:

1. include and list as additional insureds Owner and Engineer, and any individuals or entities identified as additional insureds in the Supplementary Conditions;

2. include coverage for the respective officers, directors, members, partners, employees, and consultants of all such additional insureds;

3. afford primary coverage to these additional insureds for all claims covered thereby (including as applicable those arising from both ongoing and completed operations);

4. not seek contribution from insurance maintained by the additional insured; and

5. as to commercial general liability insurance, apply to additional insureds with respect to liability caused in whole or in part by Contractor's acts or omissions, or the acts and omissions of those working on Contractor's behalf, in the performance of Contractor's operations.

6.04 *Builder's Risk and Other Property Insurance*

A. *Builder's Risk*: Unless otherwise provided in the Supplementary Conditions, Contractor shall purchase and maintain builder's risk insurance upon the Work on a completed value basis, in the amount of the Work's full insurable replacement cost (subject to such deductible amounts as may be provided in the Supplementary Conditions or required by Laws and Regulations).

Copyright© 2018 National Society of Professional Engineers, American Council of Engineering Companies, and American Society of Civil Engineers. All rights reserved.

The specific requirements applicable to the builder's risk insurance are set forth in the Supplementary Conditions.

B. *Property Insurance for Facilities of Owner Where Work Will Occur*: Contractor is responsible for obtaining and maintaining property insurance covering each existing structure, building, or facility in which any part of the Work will occur, or to which any part of the Work will attach or be adjoined. Such property insurance will be written on a special perils (all-risk) form, on a replacement cost basis, providing coverage consistent with that required for the builder's risk insurance, and will be maintained until the Work is complete, as set forth in Paragraph 15.06.D. Such policy shall identify both Contractor and Owner as additional insureds. Contractor shall be solely responsible for any deductible.

C. *Property Insurance for Substantially Complete Facilities*: Promptly after Substantial Completion, and before actual occupancy or use of the substantially completed Work, Contractor will obtain property insurance for such substantially completed Work, and maintain such property insurance at least until the Work is complete, as set forth in Paragraph 15.06.D. Such property insurance will be written on a special perils (all-risk) form, on a replacement cost basis, and provide coverage consistent with that required for the builder's risk insurance. The builder's risk insurance may terminate upon written confirmation of Contractor's procurement of such property insurance.

D. *Partial Occupancy or Use by Owner*: If Owner will occupy or use a portion or portions of the Work prior to Substantial Completion of all the Work, as provided in Paragraph 15.04, then Owner through Contractor will provide advance notice of such occupancy or use to the builder's risk or all-risk insurer, and Contractor shall obtain an occupancy or use endorsement consenting to the continuation of coverage prior to Owner commencing such partial occupancy or use.

E. *Insurance of Other Property; Additional Insurance*: If the express insurance provisions of the Contract do not require or address the insurance of a property item or interest, then the entity or individual owning such property item will be responsible for insuring it. If Contractor elects to obtain other special insurance to be included in or supplement the builder's risk or property insurance policies provided under this Paragraph 6.04, it may do so at Contractor's expense.

6.05 *Property Losses; Subrogation*

A. The builder's risk insurance policy purchased and maintained in accordance with Paragraph 6.04 (or an installation floater policy if authorized by the Supplementary Conditions), will contain provisions to the effect that in the event of payment of any loss or damage the insurer will have no rights of recovery against any insureds thereunder, or against Engineer or its consultants, or their officers, directors, members, partners, employees, agents, consultants, or subcontractors.

1. Owner and Contractor waive all rights against each other and the respective officers, directors, members, partners, employees, agents, consultants, and subcontractors of each and any of them, for all losses and damages caused by, arising out of, or resulting from any of the perils, risks, or causes of loss covered by such policies and any other property insurance applicable to the Work; and, in addition, waive all such rights against Engineer, its consultants, all individuals or entities identified in the Supplementary Conditions as builder's risk or installation floater insureds, and the officers, directors,

Copyright© 2018 National Society of Professional Engineers, American Council of Engineering Companies, and American Society of Civil Engineers. All rights reserved.

members, partners, employees, agents, consultants, and subcontractors of each and any of them, under such policies for losses and damages so caused.

2. None of the above waivers extends to the rights that any party making such waiver may have to the proceeds of insurance held by Contractor as trustee or fiduciary, or otherwise payable under any policy so issued.

B. Deleted in its entirety.

1. Deleted in its entirety.

C. Deleted in its entirety.

D. Contractor shall be responsible for assuring that each Subcontract contains provisions whereby the Subcontractor waives all rights against Owner, Contractor, all individuals or entities identified in the Supplementary Conditions as insureds, the Engineer and its consultants, and the officers, directors, members, partners, employees, agents, consultants, and subcontractors of each and any of them, for all losses and damages caused by, arising out of, relating to, or resulting from fire or other peril, risk, or cause of loss covered by builder's risk insurance, installation floater, and any other property insurance applicable to the Work.

6.06 *Receipt and Application of Property Insurance Proceeds*

A. Any insured loss under the builder's risk and other policies of property insurance required by Paragraph 6.04 will be adjusted and settled with the named insured that purchased the policy. Such named insured shall act as fiduciary for the other insureds, and give notice to such other insureds that adjustment and settlement of a claim is in progress. Any other insured may state its position regarding a claim for insured loss in writing within 15 days after notice of such claim.

B. Proceeds for such insured losses may be made payable by the insurer either jointly to multiple insureds, or to the named insured that purchased the policy in its own right and as fiduciary for other insureds, subject to the requirements of any applicable mortgage clause. A named insured receiving insurance proceeds under the builder's risk and other policies of insurance required by Paragraph 6.04 shall maintain such proceeds in a segregated account, and distribute such proceeds in accordance with such agreement as the parties in interest may reach, or as otherwise required under the dispute resolution provisions of this Contract or applicable Laws and Regulations.

C. If no other special agreement is reached, Contractor shall repair or replace the damaged Work, using allocated insurance proceeds.

D. Owner, at its sole discretion, may elect to fund the costs associated with any property insurance claim, excluding the deductible, and seek reimbursement from Contractor's policy that identifies both Contractor and Owner as named insureds. If Owner exercises this right, it shall have sole authority to settle and adjust any claim and receive reimbursement under the policy with the proceeds made payable to Owner. Contractor shall have the obligation to cooperate and comply with all terms and provisions of the policy and its failure to do so shall constitute a material breach of the Contract. If Owner does not elect this right, Contractor shall be required to fund the costs associated with any property insurance claim and seek reimbursement under the policy.

Copyright© 2018 National Society of Professional Engineers, American Council of Engineering Companies, and American Society of Civil Engineers. All rights reserved.

E. In the event of any conflict between this Paragraph 6.06 and the specific insurance requirements of Contractor set forth in the Supplemental Conditions, the specific insurance requirements in the Supplemental Conditions shall govern.

ARTICLE 7—CONTRACTOR'S RESPONSIBILITIES

7.01 *Contractor's Means and Methods of Construction*

A. Contractor shall be solely responsible for the means, methods, techniques, sequences, and procedures of construction.

B. If the Contract Documents note, or Contractor determines, that professional engineering or other design services are needed to carry out Contractor's responsibilities for construction means, methods, techniques, sequences, and procedures, or for Site safety, then Contractor shall cause such services to be provided by a properly licensed design professional, at Contractor's expense. Such services are not Owner-delegated professional design services under this Contract, and neither Owner nor Engineer has any responsibility with respect to (1) Contractor's determination of the need for such services, (2) the qualifications or licensing of the design professionals retained or employed by Contractor, (3) the performance of such services, or (4) any errors, omissions, or defects in such services.

7.02 *Supervision and Superintendence*

A. Contractor shall supervise, inspect, and direct the Work competently and efficiently, devoting such attention thereto and applying such skills and expertise as may be necessary to perform the Work in accordance with the Contract Documents.

B. At all times during the progress of the Work, Contractor shall assign a competent resident superintendent who will not be replaced without written notice to Owner and Engineer except under extraordinary circumstances.

7.03 *Labor; Working Hours*

A. Contractor shall provide competent, suitably qualified personnel to survey and lay out the Work and perform construction as required by the Contract Documents. Contractor shall maintain good discipline and order at the Site.

B. Contractor shall be fully responsible to Owner and Engineer for all acts and omissions of Contractor's employees; of Suppliers and Subcontractors, and their employees; and of any other individuals or entities performing or furnishing any of the Work, just as Contractor is responsible for Contractor's own acts and omissions. The Contractor agrees to remove from the Project an employee, Subcontractor, or Subcontractor employee that commits any breach of the Contract Documents or any breach of the Owner's written rules and regulations regarding jobsite conduct.

C. The Contractor shall enforce strict discipline and good order among the Contractor's employees and other persons carrying out the Work. Contractor shall not permit employment of unfit persons or persons not properly skilled in tasks assigned to them. The Contractor shall require all construction personnel to maintain a neat general appearance at all times. Shirts, trousers and proper shoes are required apparel. The display of vulgar words, signs or figures is prohibited. Sandals and flip-flops are prohibited on the Project site. The use of radios, tape

Copyright© 2018 National Society of Professional Engineers, American Council of Engineering Companies, and American Society of Civil Engineers. All rights reserved.

players, CD players, boom boxes, sound producing devices and the like are prohibited on the Project site. The Contractor shall not be permitted to use restrooms or other sanitary facilities within the Owner's existing buildings or on-site facilities.

D. Except as otherwise required for the safety or protection of persons or the Work or property at the Site or adjacent thereto, and except as otherwise stated in the Contract Documents, all Work at the Site will be performed during regular working hours, Monday through Friday. Contractor will not perform Work on a Saturday, Sunday, or any legal holiday. Contractor may perform Work outside regular working hours or on Saturdays, Sundays, or legal holidays only with Owner's written consent, which will not be unreasonably withheld.

7.04 *Services, Materials, and Equipment*

A. Unless otherwise specified in the Contract Documents, Contractor shall provide and assume full responsibility for all services, materials, equipment, labor, transportation, construction equipment and machinery, tools, appliances, fuel, power, light, heat, telephone, water, sanitary facilities, temporary facilities, and all other facilities and incidentals necessary for the performance, testing, start up, and completion of the Work, whether or not such items are specifically called for in the Contract Documents.

B. All materials and equipment incorporated into the Work must be new and of good quality, except as otherwise provided in the Contract Documents. All special warranties and guarantees required by the Specifications will expressly run to the benefit of Owner. If required by Engineer, Contractor shall furnish satisfactory evidence (including reports of required tests) as to the source, kind, and quality of materials and equipment.

C. All materials and equipment must be stored, applied, installed, connected, erected, protected, used, cleaned, and conditioned in accordance with instructions of the applicable Supplier, except as otherwise may be provided in the Contract Documents.

7.05 *"Or Equals"*

A. *Contractor's Request; Governing Criteria*: Whenever an item of equipment or material is specified or described in the Contract Documents by using the names of one or more proprietary items or specific Suppliers, the Contract Price has been based upon Contractor furnishing such item as specified. The specification or description of such an item is intended to establish the type, function, appearance, and quality required. Unless the specification or description contains or is followed by words reading that no like, equivalent, or "or equal" item is permitted, Contractor may request that Engineer authorize the use of other items of equipment or material, or items from other proposed Suppliers, under the circumstances described below.

1. If Engineer in its sole discretion determines that an item of equipment or material proposed by Contractor is functionally equal to that named and sufficiently similar so that no change in related Work will be required, Engineer will deem it an "or equal" item. For

Copyright© 2018 National Society of Professional Engineers, American Council of Engineering Companies, and American Society of Civil Engineers. All rights reserved.

the purposes of this paragraph, a proposed item of equipment or material will be considered functionally equal to an item so named if:

a. in the exercise of reasonable judgment Engineer determines that the proposed item:

1) is at least equal in materials of construction, quality, durability, appearance, strength, and design characteristics;

2) will reliably perform at least equally well the function and achieve the results imposed by the design concept of the completed Project as a functioning whole;

3) has a proven record of performance and availability of responsive service; and

4) is not objectionable to Owner.

b. Contractor certifies that, if the proposed item is approved and incorporated into the Work:

1) there will be no increase in cost to the Owner or increase in Contract Times; and

2) the item will conform substantially to the detailed requirements of the item named in the Contract Documents.

B. *Contractor's Expense*: Contractor shall provide all data in support of any proposed "or equal" item at Contractor's expense.

C. *Engineer's Evaluation and Determination*: Engineer will be allowed a reasonable time to evaluate each "or-equal" request. Engineer may require Contractor to furnish additional data about the proposed "or-equal" item. Engineer will be the sole judge of acceptability. No "or-equal" item will be ordered, furnished, installed, or utilized until Engineer's review is complete and Engineer determines that the proposed item is an "or-equal," which will be evidenced by an approved Shop Drawing or other written communication. Engineer will advise Contractor in writing of any negative determination.

D. *Effect of Engineer's Determination*: Neither approval nor denial of an "or-equal" request will result in any change in Contract Price. The Engineer's denial of an "or-equal" request will be final and binding, and may not be reversed through an appeal under any provision of the Contract.

E. *Treatment as a Substitution Request*: If Engineer determines that an item of equipment or material proposed by Contractor does not qualify as an "or-equal" item, Contractor may request that Engineer consider the item a proposed substitute pursuant to Paragraph 7.06.

7.06 *Substitutes*

A. *Contractor's Request; Governing Criteria*: Unless the specification or description of an item of equipment or material required to be furnished under the Contract Documents contains or is followed by words reading that no substitution is permitted, Contractor may request that Engineer authorize the use of other items of equipment or material under the circumstances described below. To the extent possible such requests must be made before commencement of related construction at the Site.

1. Contractor shall submit sufficient information as provided below to allow Engineer to determine if the item of material or equipment proposed is functionally equivalent to that

Copyright© 2018 National Society of Professional Engineers, American Council of Engineering Companies, and American Society of Civil Engineers. All rights reserved.

named and an acceptable substitute therefor. Engineer will not accept requests for review of proposed substitute items of equipment or material from anyone other than Contractor.

2. The requirements for review by Engineer will be as set forth in Paragraph 7.06.B, as supplemented by the Specifications, and as Engineer may decide is appropriate under the circumstances.

3. Contractor shall make written application to Engineer for review of a proposed substitute item of equipment or material that Contractor seeks to furnish or use. The application:

    a. will certify that the proposed substitute item will:

        1) perform adequately the functions and achieve the results called for by the general design;

        2) be similar in substance to the item specified; and

        3) be suited to the same use as the item specified.

    b. will state:

        1) the extent, if any, to which the use of the proposed substitute item will necessitate a change in Contract Times;

        2) whether use of the proposed substitute item in the Work will require a change in any of the Contract Documents (or in the provisions of any other direct contract with Owner for other work on the Project) to adapt the design to the proposed substitute item; and

        3) whether incorporation or use of the proposed substitute item in connection with the Work is subject to payment of any license fee or royalty.

    c. will identify:

        1) all variations of the proposed substitute item from the item specified; and

        2) available engineering, sales, maintenance, repair, and replacement services.

    d. will contain an itemized estimate of all costs or credits that will result directly or indirectly from use of such substitute item, including but not limited to changes in Contract Price, shared savings, costs of redesign, and claims of other contractors affected by any resulting change.

B. *Engineer's Evaluation and Determination*: Engineer will be allowed a reasonable time to evaluate each substitute request, and to obtain comments and direction from Owner. Engineer may require Contractor to furnish additional data about the proposed substitute item. Engineer will be the sole judge of acceptability. No substitute will be ordered, furnished, installed, or utilized until Engineer's review is complete and Engineer determines that the proposed item is an acceptable substitute. Engineer's determination will be evidenced by a Field Order or a proposed Change Order accounting for the substitution itself and all related impacts, including changes in Contract Price or Contract Times. Engineer will advise Contractor in writing of any negative determination.

Copyright© 2018 National Society of Professional Engineers, American Council of Engineering Companies, and American Society of Civil Engineers. All rights reserved.

C. *Special Guarantee*: Owner may require Contractor to furnish at Contractor's expense a special performance guarantee or other surety with respect to any substitute.

D. *Reimbursement of Engineer's Cost*: Engineer will record Engineer's costs in evaluating a substitute proposed or submitted by Contractor. Whether or not Engineer approves a substitute so proposed or submitted by Contractor, Contractor shall reimburse Owner for the reasonable charges of Engineer for evaluating each such proposed substitute. Contractor shall also reimburse Owner for the reasonable charges of Engineer for making changes in the Contract Documents (or in the provisions of any other direct contract with Owner) resulting from the acceptance of each proposed substitute.

E. *Contractor's Expense*: Contractor shall provide all data in support of any proposed substitute at Contractor's expense.

F. *Effect of Engineer's Determination*: If Engineer approves the substitution request, Contractor shall execute the proposed Change Order and proceed with the substitution. The Engineer's denial of a substitution request will be final and binding, and may not be reversed through an appeal under any provision of the Contract. Contractor may challenge the scope of reimbursement costs imposed under Paragraph 7.06.D, by timely submittal of a Change Proposal.

7.07 *Concerning Subcontractors and Suppliers*

A. Contractor may retain Subcontractors and Suppliers for the performance of parts of the Work. Such Subcontractors and Suppliers must be acceptable to Owner. The Contractor's retention of a Subcontractor or Supplier for the performance of parts of the Work will not relieve Contractor's obligation to Owner to perform and complete the Work in accordance with the Contract Documents.

B. Contractor shall retain specific Subcontractors and Suppliers for the performance of designated parts of the Work if required by the Contract to do so.

C. Subsequent to the submittal of Contractor's Bid or final negotiation of the terms of the Contract, Owner may not require Contractor to retain any Subcontractor or Supplier to furnish or perform any of the Work against which Contractor has reasonable objection.

D. Prior to entry into any binding subcontract or purchase order, Contractor shall submit to Owner the identity of the proposed Subcontractor or Supplier (unless Owner has already deemed such proposed Subcontractor or Supplier acceptable during the bidding process or otherwise). Such proposed Subcontractor or Supplier shall be deemed acceptable to Owner unless Owner raises a substantive, reasonable objection within 5 days.

E. Owner may require the replacement of any Subcontractor or Supplier. Owner also may require Contractor to retain specific replacements; provided, however, that Owner may not require a replacement to which Contractor has a reasonable objection. If Contractor has submitted the identity of certain Subcontractors or Suppliers for acceptance by Owner, and Owner has accepted it (either in writing or by failing to make written objection thereto), then Owner may subsequently revoke the acceptance of any such Subcontractor or Supplier so identified solely on the basis of substantive, reasonable objection after due investigation. Contractor shall submit an acceptable replacement for the rejected Subcontractor or Supplier.

Copyright© 2018 National Society of Professional Engineers, American Council of Engineering Companies, and American Society of Civil Engineers. All rights reserved.

F. If Owner requires the replacement of any Subcontractor or Supplier retained by Contractor to perform any part of the Work, then Contractor shall be entitled to an adjustment in Contract Price or Contract Times, with respect to the replacement; and Contractor shall initiate a Change Proposal for such adjustment within 30 days of Owner's requirement of replacement.

G. No acceptance by Owner of any such Subcontractor or Supplier, whether initially or as a replacement, will constitute a waiver of the right of Owner to the completion of the Work in accordance with the Contract Documents.

H. On a monthly basis, Contractor shall submit to Engineer a complete list of all Subcontractors and Suppliers having a direct contract with Contractor, and of all other Subcontractors and Suppliers known to Contractor at the time of submittal.

I. Contractor shall be solely responsible for scheduling and coordinating the work of Subcontractors and Suppliers.

J. The divisions and sections of the Specifications and the identifications of any Drawings do not control Contractor in dividing the Work among Subcontractors or Suppliers, or in delineating the Work to be performed by any specific trade.

K. All Work performed for Contractor by a Subcontractor or Supplier must be pursuant to an appropriate contractual agreement that specifically binds the Subcontractor or Supplier to the applicable terms and conditions of the Contract for the benefit of Owner and Engineer.

L. Owner may furnish to any Subcontractor or Supplier, to the extent practicable, information about amounts paid to Contractor for Work performed for Contractor by the Subcontractor or Supplier.

M. Contractor shall restrict all Subcontractors and Suppliers from communicating with Engineer or Owner, except through Contractor or in case of an emergency, or as otherwise expressly allowed in this Contract.

7.08 *Patent Fees and Royalties*

A. Contractor shall pay all license fees and royalties and assume all costs incident to the use in the performance of the Work or the incorporation in the Work of any invention, design, process, product, or device which is the subject of patent rights or copyrights held by others. If an invention, design, process, product, or device is specified in the Contract Documents for use in the performance of the Work and if, to the actual knowledge of Owner or Engineer, its use is subject to patent rights or copyrights calling for the payment of any license fee or royalty to others, the existence of such rights will be disclosed in the Contract Documents.

B. Deleted in its entirety.

C. Deleted in its entirety.

7.09 *Permits*

A. Unless otherwise provided in the Contract Documents, Contractor shall obtain and pay for all construction permits, licenses, and certificates of occupancy. Owner shall assist Contractor, when necessary, in obtaining such permits and licenses. Contractor shall pay all governmental charges and inspection fees necessary for the prosecution of the Work which are applicable

Copyright© 2018 National Society of Professional Engineers, American Council of Engineering Companies, and American Society of Civil Engineers. All rights reserved.

at the time of the submission of Contractor's Bid (or when Contractor became bound under a negotiated contract). Owner shall pay all charges of utility owners for connections for providing permanent service to the Work.

7.10 *Taxes*

A. Contractor shall pay all sales, consumer, use, and other similar taxes required to be paid by Contractor in accordance with the Laws and Regulations of the place of the Project which are applicable during the performance of the Work.

7.11 *Laws and Regulations*

A. Contractor shall give all notices required by and shall comply with all Laws and Regulations applicable to the performance of the Work. Neither Owner nor Engineer shall be responsible for monitoring Contractor's compliance with any Laws or Regulations.

B. If Contractor performs any Work or takes any other action knowing or having reason to know that it is contrary to Laws or Regulations, Contractor shall bear all resulting costs and losses, and shall indemnify and hold harmless Owner and Engineer, and the officers, directors, members, partners, employees, agents, consultants, and subcontractors of each and any of them, from and against all claims, costs, losses, and damages (including but not limited to all fees and charges of engineers, architects, attorneys, and other professionals and all court or arbitration or other dispute resolution costs) arising out of or relating to such Work or other action. It is not Contractor's responsibility to make certain that the Work described in the Contract Documents is in accordance with Laws and Regulations, but this does not relieve Contractor of its obligations under Paragraph 3.03.

C. Owner or Contractor may give written notice to the other party of any changes after the submission of Contractor's Bid (or after the date when Contractor became bound under a negotiated contract) in Laws or Regulations having an effect on the cost or time of performance of the Work, including but not limited to changes in Laws or Regulations having an effect on procuring permits and on sales, use, value-added, consumption, and other similar taxes. If Owner and Contractor are unable to agree on entitlement to or on the amount or extent, if any, of any adjustment in Contract Price or Contract Times resulting from such changes, then within 30 days of such written notice Contractor may submit a Change Proposal, or Owner may initiate a Claim.

7.12 *Record Documents*

A. Contractor shall maintain in a safe place at the Site one printed record copy of all Drawings, Specifications, Addenda, Change Orders, Work Change Directives, Field Orders, written interpretations and clarifications, and approved Shop Drawings. Contractor shall keep such record documents in good order and annotate them to show changes made during construction. These record documents, together with all approved Samples, will be available to Engineer for reference. Upon completion of the Work, Contractor shall deliver these record documents to Engineer.

7.13 *Safety and Protection*

A. Contractor shall be solely responsible for initiating, maintaining, and supervising all safety precautions and programs in connection with the Work. Such responsibility does not relieve

Copyright© 2018 National Society of Professional Engineers, American Council of Engineering Companies, and American Society of Civil Engineers. All rights reserved.

Subcontractors of their responsibility for the safety of persons or property in the performance of their work, nor for compliance with applicable safety Laws and Regulations.

B. Contractor shall designate a qualified and experienced safety representative whose duties and responsibilities are the prevention of Work-related accidents and the maintenance and supervision of safety precautions and programs.

C. Contractor shall take all necessary precautions for the safety of, and shall provide the necessary protection to prevent damage, injury, or loss to:

1. all persons on the Site or who may be affected by the Work;

2. all the Work and materials and equipment to be incorporated therein, whether in storage on or off the Site; and

3. other property at the Site or adjacent thereto, including trees, shrubs, lawns, walks, pavements, roadways, structures, other work in progress, utilities, and Underground Facilities not designated for removal, relocation, or replacement in the course of construction.

D. All damage, injury, or loss to any property referred to in Paragraph 7.13.C.2 or 7.13.C.3 caused, directly or indirectly, in whole or in part, by Contractor, any Subcontractor, Supplier, or any other individual or entity directly or indirectly employed by any of them to perform any of the Work, or anyone for whose acts any of them may be liable, shall be remedied by Contractor at its expense (except damage or loss attributable to the fault of Drawings or Specifications or to the acts or omissions of Owner or Engineer or anyone employed by any of them, or anyone for whose acts any of them may be liable, and not attributable, directly or indirectly, in whole or in part, to the fault or negligence of Contractor or any Subcontractor, Supplier, or other individual or entity directly or indirectly employed by any of them).

E. Contractor shall comply with all applicable Laws and Regulations relating to the safety of persons or property, or to the protection of persons or property from damage, injury, or loss; and shall erect and maintain all necessary safeguards for such safety and protection.

F. Contractor shall notify Owner; the owners of adjacent property; the owners of Underground Facilities and other utilities (if the identity of such owners is known to Contractor); and other contractors and utility owners performing work at or adjacent to the Site, in writing, when Contractor knows that prosecution of the Work may affect them, and shall cooperate with them in the protection, removal, relocation, and replacement of their property or work in progress.

G. Contractor shall comply with the applicable requirements of Owner's safety programs, if any. Any Owner's safety programs that are applicable to the Work are identified or included in the Supplementary Conditions or Specifications.

H. Contractor shall inform Owner and Engineer of the specific requirements of Contractor's safety program with which Owner's and Engineer's employees and representatives must comply while at the Site.

I. Contractor's duties and responsibilities for safety and protection will continue until all the Work is completed, Engineer has issued a written notice to Owner and Contractor in

Copyright© 2018 National Society of Professional Engineers, American Council of Engineering Companies, and American Society of Civil Engineers. All rights reserved.

accordance with Paragraph 15.06.C that the Work is acceptable, and Contractor has left the Site (except as otherwise expressly provided in connection with Substantial Completion).

J. Contractor's duties and responsibilities for safety and protection will resume whenever Contractor or any Subcontractor or Supplier returns to the Site to fulfill warranty or correction obligations, or to conduct other tasks arising from the Contract Documents.

7.14 *Hazard Communication Programs*

A. Contractor shall be responsible for coordinating any exchange of safety data sheets (formerly known as material safety data sheets) or other hazard communication information required to be made available to or exchanged between or among employers at the Site in accordance with Laws or Regulations.

7.15 *Emergencies*

A. In emergencies affecting the safety or protection of persons or the Work or property at the Site or adjacent thereto, Contractor is obligated to act to prevent damage, injury, or loss. Contractor shall give Engineer prompt written notice if Contractor believes that any significant changes in the Work or variations from the Contract Documents have been caused by an emergency, or are required as a result of Contractor's response to an emergency. If Engineer determines that a change in the Contract Documents is required because of an emergency or Contractor's response, a Work Change Directive or Change Order will be issued.

7.16 *Submittals*

A. *Shop Drawing and Sample Requirements*

1. Before submitting a Shop Drawing or Sample, Contractor shall:

a. review and coordinate the Shop Drawing or Sample with other Shop Drawings and Samples and with the requirements of the Work and the Contract Documents;

b. determine and verify:

1) all field measurements, quantities, dimensions, specified performance and design criteria, installation requirements, materials, catalog numbers, and similar information with respect to the Submittal;

2) the suitability of all materials and equipment offered with respect to the indicated application, fabrication, shipping, handling, storage, assembly, and installation pertaining to the performance of the Work; and

3) all information relative to Contractor's responsibilities for means, methods, techniques, sequences, and procedures of construction, and safety precautions and programs incident thereto;

c. confirm that the Submittal is complete with respect to all related data included in the Submittal.

2. Each Shop Drawing or Sample must bear a stamp or specific written certification that Contractor has satisfied Contractor's obligations under the Contract Documents with respect to Contractor's review of that Submittal, and that Contractor approves the Submittal.

Copyright© 2018 National Society of Professional Engineers, American Council of Engineering Companies, and American Society of Civil Engineers. All rights reserved.

3. With each Shop Drawing or Sample, Contractor shall give Engineer specific written notice of any variations that the Submittal may have from the requirements of the Contract Documents. This notice must be set forth in a written communication separate from the Submittal; and, in addition, in the case of a Shop Drawing by a specific notation made on the Shop Drawing itself.

B. *Submittal Procedures for Shop Drawings and Samples*: Contractor shall label and submit Shop Drawings and Samples to Engineer for review and approval in accordance with the accepted Schedule of Submittals.

1. *Shop Drawings*

a. Contractor shall submit the number of copies required in the Specifications.

b. Data shown on the Shop Drawings must be complete with respect to quantities, dimensions, specified performance and design criteria, materials, and similar data to show Engineer the services, materials, and equipment Contractor proposes to provide, and to enable Engineer to review the information for the limited purposes required by Paragraph 7.16.C.

2. *Samples*

a. Contractor shall submit the number of Samples required in the Specifications.

b. Contractor shall clearly identify each Sample as to material, Supplier, pertinent data such as catalog numbers, the use for which intended and other data as Engineer may require to enable Engineer to review the Submittal for the limited purposes required by Paragraph 7.16.C.

3. Where a Shop Drawing or Sample is required by the Contract Documents or the Schedule of Submittals, any related Work performed prior to Engineer's review and approval of the pertinent submittal will be at the sole expense and responsibility of Contractor.

C. *Engineer's Review of Shop Drawings and Samples*

1. Engineer will provide timely review of Shop Drawings and Samples in accordance with the accepted Schedule of Submittals. Engineer's review and approval will be only to determine if the items covered by the Submittals will, after installation or incorporation in the Work, comply with the requirements of the Contract Documents, and be compatible with the design concept of the completed Project as a functioning whole as indicated by the Contract Documents.

2. Engineer's review and approval will not extend to means, methods, techniques, sequences, or procedures of construction, or to safety precautions or programs incident thereto.

3. Engineer's review and approval of a separate item as such will not indicate approval of the assembly in which the item functions.

4. Engineer's review and approval of a Shop Drawing or Sample will not relieve Contractor from responsibility for any variation from the requirements of the Contract Documents unless Contractor has complied with the requirements of Paragraph 7.16.A.3 and Engineer has given written approval of each such variation by specific written notation

Copyright© 2018 National Society of Professional Engineers, American Council of Engineering Companies, and American Society of Civil Engineers. All rights reserved.

thereof incorporated in or accompanying the Shop Drawing or Sample. Engineer will document any such approved variation from the requirements of the Contract Documents in a Field Order or other appropriate Contract modification.

5. Engineer's review and approval of a Shop Drawing or Sample will not relieve Contractor from responsibility for complying with the requirements of Paragraphs 7.16.A and B.

6. Engineer's review and approval of a Shop Drawing or Sample, or of a variation from the requirements of the Contract Documents, will not, under any circumstances, change the Contract Times or Contract Price, unless such changes are included in a Change Order.

7. Neither Engineer's receipt, review, acceptance, or approval of a Shop Drawing or Sample will result in such item becoming a Contract Document.

8. Contractor shall perform the Work in compliance with the requirements and commitments set forth in approved Shop Drawings and Samples, subject to the provisions of Paragraph 7.16.C.4.

D. *Resubmittal Procedures for Shop Drawings and Samples*

1. Contractor shall make corrections required by Engineer and shall return the required number of corrected copies of Shop Drawings and submit, as required, new Samples for review and approval. Contractor shall direct specific attention in writing to revisions other than the corrections called for by Engineer on previous Submittals.

2. Contractor shall furnish required Shop Drawing and Sample submittals with sufficient information and accuracy to obtain required approval of an item with no more than two resubmittals. Engineer will record Engineer's time for reviewing a third or subsequent resubmittal of a Shop Drawing or Sample, and Contractor shall be responsible for Engineer's charges to Owner for such time. Owner may impose a set-off against payments due Contractor to secure reimbursement for such charges.

3. If Contractor requests a change of a previously approved Shop Drawing or Sample, Contractor shall be responsible for Engineer's charges to Owner for its review time, and Owner may impose a set-off against payments due Contractor to secure reimbursement for such charges, unless the need for such change is beyond the control of Contractor.

E. *Submittals Other than Shop Drawings, Samples, and Owner-Delegated Designs*

1. The following provisions apply to all Submittals other than Shop Drawings, Samples, and Owner-delegated designs:

   a. Contractor shall submit all such Submittals to the Engineer in accordance with the Schedule of Submittals and pursuant to the applicable terms of the Contract Documents.

   b. Engineer will provide timely review of all such Submittals in accordance with the Schedule of Submittals and return such Submittals with a notation of either Accepted or Not Accepted. Any such Submittal that is not returned within the time established in the Schedule of Submittals will be deemed accepted.

Copyright© 2018 National Society of Professional Engineers, American Council of Engineering Companies, and American Society of Civil Engineers. All rights reserved.

c. Engineer's review will be only to determine if the Submittal is acceptable under the requirements of the Contract Documents as to general form and content of the Submittal.

d. If any such Submittal is not accepted, Contractor shall confer with Engineer regarding the reason for the non-acceptance, and resubmit an acceptable document.

2. Procedures for the submittal and acceptance of the Progress Schedule, the Schedule of Submittals, and the Schedule of Values are set forth in Paragraphs 2.03. 2.04, and 2.05.

F. Owner-delegated Designs: Submittals pursuant to Owner-delegated designs are governed by the provisions of Paragraph 7.19.

7.17 *Contractor's General Warranty and Guarantee*

A. Contractor warrants and guarantees to Owner that all Work will be in accordance with the Contract Documents and will not be defective. Engineer is entitled to rely on Contractor's warranty and guarantee.

B. Owner's rights under this warranty and guarantee are in addition to, and are not limited by, Owner's rights under the correction period provisions of Paragraph 15.08. The time in which Owner may enforce its warranty and guarantee rights under this Paragraph 7.17 is limited only by applicable Laws and Regulations restricting actions to enforce such rights; provided, however, that after the end of the correction period under Paragraph 15.08:

1. Owner shall give Contractor written notice of any defective Work within 60 days of the discovery that such Work is defective; and

2. Such notice will be deemed the start of an event giving rise to a Claim under Paragraph 12.01.B, such that any related Claim must be brought within 30 days of the notice.

C. Contractor's warranty and guarantee hereunder excludes defects or damage caused by:

1. abuse, or improper modification, maintenance, or operation, by persons other than Contractor, Subcontractors, Suppliers, or any other individual or entity for whom Contractor is responsible; or

2. normal wear and tear under normal usage.

D. Contractor's obligation to perform and complete the Work in accordance with the Contract Documents is absolute. None of the following will constitute an acceptance of Work that is not in accordance with the Contract Documents, a release of Contractor's obligation to perform the Work in accordance with the Contract Documents, or a release of Owner's warranty and guarantee rights under this Paragraph 7.17:

1. Observations by Engineer;

2. Recommendation by Engineer or payment by Owner of any progress or final payment;

3. The issuance of a certificate of Substantial Completion by Engineer or any payment related thereto by Owner;

4. Use or occupancy of the Work or any part thereof by Owner;

Copyright© 2018 National Society of Professional Engineers, American Council of Engineering Companies, and American Society of Civil Engineers. All rights reserved.

5. Any review and approval of a Shop Drawing or Sample submittal;
6. The issuance of a notice of acceptability by Engineer;
7. The end of the correction period established in Paragraph 15.08;
8. Any inspection, test, or approval by others; or
9. Any correction of defective Work by Owner.

E. If the Contract requires the Contractor to accept the assignment of a contract entered into by Owner, then the specific warranties, guarantees, and correction obligations contained in the assigned contract will govern with respect to Contractor's performance obligations to Owner for the Work described in the assigned contract.

7.18 *Indemnification*

A. To the fullest extent permitted by Laws and Regulations, and in addition to any other obligations of Contractor under the Contract or otherwise, Contractor shall indemnify and hold harmless Owner, and the Owner's officers, and employees, from losses, damages, costs, and judgments (including but not limited to all reasonable fees and charges of engineers, architects, attorneys, and other professionals, and all court or arbitration or other dispute resolution costs) arising from third-party claims or actions relating to or resulting from the performance or furnishing of the Work, provided that any such claim, action, loss, cost, judgment or damage is attributable to bodily injury, sickness, disease, or death, or to damage to or destruction of tangible property (other than the Work itself), including the loss of use resulting therefrom, and caused in whole or in part by any act or omission of the Contractor, any Subcontractor, anyone directly or indirectly employed by any of them or anyone for whose acts any of them may be liable, regardless of whether or not it is caused in part by a party indemnified hereunder. Such obligation shall not be construed to negate, abridge or otherwise reduce any other right or obligation of indemnity which otherwise exists as to any party or person described in this subsection .

B. The Contractor acknowledges the limit of dollar amount of Contractor's indemnity obligations required by the Contract specifically for those claims caused in whole or in part by the Owner or Engineer shall be $1,000,000 or the Contract Sum of the Project, whichever is more. The parties agree that the indemnity provided herein bears a reasonable commercial relationship to the Contract and is incorporated by this reference into the Project specifications and bid documents. if any.

C. Notwithstanding the above and without monetary limitation, the Contractor hereby indemnifies and holds harmless the Owner, their officers and employees, from liabilities, damages, losses and costs, including, but not limited to, reasonable attorney's fees, to the extent caused by negligence, recklessness, or intentional wrongful misconduct of the Contractor and persons employed or utilized by the Contractor in the performance of the Contract.

D. Contractor agrees and understands that its obligation to indemnify, hold harmless, and defend as set forth in Paragraphs 7.18.A and B. above includes without limitation, claims, losses, etc., for personal injury, death, property damage, Hazardous Environmental Conditions, infringement of patent rights or copyrights incidental to the use or incorporation

Copyright© 2018 National Society of Professional Engineers, American Council of Engineering Companies, and American Society of Civil Engineers. All rights reserved.

in the performance of the Work, etc., to the extent caused by the negligence, recklessness, or intentional misconduct of Contractor and the persons or entities employed or utilized by Contractor in the performance of the Contract.

7.19 *Delegation of Professional Design Services*

A. Owner may require Contractor to provide professional design services for a portion of the Work by express delegation in the Contract Documents. Such delegation will specify the performance and design criteria that such services must satisfy, and the Submittals that Contractor must furnish to Engineer with respect to the Owner-delegated design.

B. Contractor shall cause such Owner-delegated professional design services to be provided pursuant to the professional standard of care by a properly licensed design professional, whose signature and seal must appear on all drawings, calculations, specifications, certifications, and Submittals prepared by such design professional. Such design professional must issue all certifications of design required by Laws and Regulations.

C. If a Shop Drawing or other Submittal related to the Owner-delegated design is prepared by Contractor, a Subcontractor, or others for submittal to Engineer, then such Shop Drawing or other Submittal must bear the written approval of Contractor's design professional when submitted by Contractor to Engineer.

D. Owner and Engineer shall be entitled to rely upon the adequacy, accuracy, and completeness of the services, certifications, and approvals performed or provided by the design professionals retained or employed by Contractor under an Owner-delegated design, subject to the professional standard of care and the performance and design criteria stated in the Contract Documents.

E. Pursuant to this Paragraph 7.19, Engineer's review, approval, and other determinations regarding design drawings, calculations, specifications, certifications, and other Submittals furnished by Contractor pursuant to an Owner-delegated design will be only for the following limited purposes:

1. Checking for conformance with the requirements of this Paragraph 7.19;

2. Confirming that Contractor (through its design professionals) has used the performance and design criteria specified in the Contract Documents; and

3. Establishing that the design furnished by Contractor is consistent with the design concept expressed in the Contract Documents.

F. Contractor shall not be responsible for the adequacy of performance or design criteria specified by Owner or Engineer.

G. Contractor is not required to provide professional services in violation of applicable Laws and Regulations.

Copyright© 2018 National Society of Professional Engineers, American Council of Engineering Companies, and American Society of Civil Engineers. All rights reserved.

ARTICLE 8—OTHER WORK AT THE SITE

8.01 *Other Work*

A. In addition to and apart from the Work under the Contract Documents, the Owner may perform other work at or adjacent to the Site. Such other work may be performed by Owner's employees, or through contracts between the Owner and third parties. Owner may also arrange to have third-party utility owners perform work on their utilities and facilities at or adjacent to the Site.

B. If Owner performs other work at or adjacent to the Site with Owner's employees, or through contracts for such other work, then Owner shall give Contractor written notice thereof prior to starting any such other work. If Owner has advance information regarding the start of any third-party utility work that Owner has arranged to take place at or adjacent to the Site, Owner shall provide such information to Contractor.

C. Contractor shall afford proper and safe access to the Site to each contractor that performs such other work, each utility owner performing other work, and Owner, if Owner is performing other work with Owner's employees, and provide a reasonable opportunity for the introduction and storage of materials and equipment and the execution of such other work.

D. Contractor shall do all cutting, fitting, and patching of the Work that may be required to properly connect or otherwise make its several parts come together and properly integrate with such other work. Contractor shall not endanger any work of others by cutting, excavating, or otherwise altering such work; provided, however, that Contractor may cut or alter others' work with the written consent of Engineer and the others whose work will be affected.

E. If the proper execution or results of any part of Contractor's Work depends upon work performed by others, Contractor shall inspect such other work and promptly report to Engineer in writing any delays, defects, or deficiencies in such other work that render it unavailable or unsuitable for the proper execution and results of Contractor's Work. Contractor's failure to so report will constitute an acceptance of such other work as fit and proper for integration with Contractor's Work except for latent defects and deficiencies in such other work.

F. The provisions of this article are not applicable to work that is performed by third-party utilities or other third-party entities without a contract with Owner, or that is performed without having been arranged by Owner. If such work occurs, then any related delay, disruption, or interference incurred by Contractor is governed by the provisions of Paragraph 4.05.C.3.

8.02 *Coordination*

A. If Owner intends to contract with others for the performance of other work at or adjacent to the Site, to perform other work at or adjacent to the Site with Owner's employees, or to arrange to have utility owners perform work at or adjacent to the Site, the following will be

Copyright© 2018 National Society of Professional Engineers, American Council of Engineering Companies, and American Society of Civil Engineers. All rights reserved.

set forth in the Supplementary Conditions or provided to Contractor prior to the start of any such other work:

1. The identity of the individual or entity that will have authority and responsibility for coordination of the activities among the various contractors;

2. An itemization of the specific matters to be covered by such authority and responsibility; and

3. The extent of such authority and responsibilities.

B. Unless otherwise provided in the Supplementary Conditions, Owner shall have sole authority and responsibility for such coordination.

8.03 *Legal Relationships*

A. If, in the course of performing other work for Owner at or adjacent to the Site, the Owner's employees, any other contractor working for Owner, or any utility owner that Owner has arranged to perform work, causes damage to the Work or to the property of Contractor or its Subcontractors, or delays, disrupts, interferes with, or increases the scope or cost of the performance of the Work, through actions or inaction, then Contractor shall be entitled to an equitable adjustment in the Contract Price or the Contract Times. Contractor must submit any Change Proposal seeking an equitable adjustment in the Contract Price or the Contract Times under this paragraph within 30 days of the damaging, delaying, disrupting, or interfering event. The entitlement to, and extent of, any such equitable adjustment will take into account information (if any) regarding such other work that was provided to Contractor in the Contract Documents prior to the submittal of the Bid or the final negotiation of the terms of the Contract, and any remedies available to Contractor under Laws or Regulations concerning utility action or inaction. When applicable, any such equitable adjustment in Contract Price will be conditioned on Contractor assigning to Owner all Contractor's rights against such other contractor or utility owner with respect to the damage, delay, disruption, or interference that is the subject of the adjustment. Contractor's entitlement to an adjustment of the Contract Times or Contract Price is subject to the provisions of Paragraphs 4.05.D and 4.05.E.

B. Contractor shall take reasonable and customary measures to avoid damaging, delaying, disrupting, or interfering with the work of Owner, any other contractor, or any utility owner performing other work at or adjacent to the Site.

1. If Contractor fails to take such measures and as a result damages, delays, disrupts, or interferes with the work of any such other contractor or utility owner, then Owner may impose a set-off against payments due Contractor, and assign to such other contractor or utility owner the Owner's contractual rights against Contractor with respect to the breach of the obligations set forth in this Paragraph 8.03.B.

2. When Owner is performing other work at or adjacent to the Site with Owner's employees, Contractor shall be liable to Owner for damage to such other work, and for the reasonable direct delay, disruption, and interference costs incurred by Owner as a result of Contractor's failure to take reasonable and customary measures with respect to Owner's other work. In response to such damage, delay, disruption, or interference, Owner may impose a set-off against payments due Contractor.

Copyright© 2018 National Society of Professional Engineers, American Council of Engineering Companies, and American Society of Civil Engineers. All rights reserved.

C. If Contractor damages, delays, disrupts, or interferes with the work of any other contractor, or any utility owner performing other work at or adjacent to the Site, through Contractor's failure to take reasonable and customary measures to avoid such impacts, or if any claim arising out of Contractor's actions, inactions, or negligence in performance of the Work at or adjacent to the Site is made by any such other contractor or utility owner against Contractor, Owner, or Engineer, then Contractor shall (1) promptly attempt to settle the claim as to all parties through negotiations with such other contractor or utility owner, or otherwise resolve the claim by arbitration or other dispute resolution proceeding or at law, and (2) indemnify and hold harmless Owner and Engineer, and the officers, directors, members, partners, employees, agents, consultants and subcontractors of each and any of them from and against any such claims, and against all costs, losses, and damages (including but not limited to all fees and charges of engineers, architects, attorneys, and other professionals and all court or arbitration or other dispute resolution costs) arising out of or relating to such damage, delay, disruption, or interference.

ARTICLE 9—OWNER'S RESPONSIBILITIES

9.01 *Communications to Contractor*

A. Except as otherwise provided in these General Conditions, Owner shall issue all communications to Contractor through Engineer.

9.02 *Replacement of Engineer*

A. Owner may at its discretion appoint an engineer to replace Engineer, provided Contractor makes no reasonable objection to the replacement engineer. The replacement engineer's status under the Contract Documents will be that of the former Engineer.

9.03 *Furnish Data*

A. Owner shall promptly furnish the data required of Owner under the Contract Documents.

9.04 *Pay When Due*

A. Owner shall make payments to Contractor when they are due as provided in the Agreement.

9.05 *Lands and Easements; Reports, Tests, and Drawings*

A. Owner's duties with respect to providing lands and easements are set forth in Paragraph 5.01.

B. Owner's duties with respect to providing engineering surveys to establish reference points are set forth in Paragraph 4.03.

C. Article 5 refers to Owner's identifying and making available to Contractor copies of reports of explorations and tests of conditions at the Site, and drawings of physical conditions relating to existing surface or subsurface structures at the Site.

9.06 *Insurance*

A. Owner's responsibilities, if any, with respect to purchasing and maintaining liability and property insurance are set forth in Article 6.

Copyright© 2018 National Society of Professional Engineers, American Council of Engineering Companies, and American Society of Civil Engineers. All rights reserved.

9.07 *Change Orders*

A. Owner's responsibilities with respect to Change Orders are set forth in Article 11.

9.08 *Inspections, Tests, and Approvals*

A. Owner's responsibility with respect to certain inspections, tests, and approvals is set forth in Paragraph 14.02.B.

9.09 *Limitations on Owner's Responsibilities*

A. The Owner shall not supervise, direct, or have control or authority over, nor be responsible for, Contractor's means, methods, techniques, sequences, or procedures of construction, or the safety precautions and programs incident thereto, or for any failure of Contractor to comply with Laws and Regulations applicable to the performance of the Work. Owner will not be responsible for Contractor's failure to perform the Work in accordance with the Contract Documents.

9.10 *Undisclosed Hazardous Environmental Condition*

A. Owner's responsibility in respect to an undisclosed Hazardous Environmental Condition is set forth in Paragraph 5.06.

9.11 *Deleted in its entirety.*

A. Deleted in its entirety.N/A

9.12 *Safety Programs*

A. While at the Site, Owner's employees and representatives shall comply with the specific applicable requirements of Contractor's safety programs of which Owner has been informed.

B. Owner shall furnish copies of any applicable Owner safety programs to Contractor.

ARTICLE 10—ENGINEER'S STATUS DURING CONSTRUCTION

10.01 *Owner's Representative*

A. Engineer will be Owner's representative during the construction period. The duties and responsibilities and the limitations of authority of Engineer as Owner's representative during construction are set forth in the Contract.

10.02 *Visits to Site*

A. Engineer will make visits to the Site at intervals appropriate to the various stages of construction as Engineer deems necessary in order to observe, as an experienced and qualified design professional, the progress that has been made and the quality of the various aspects of Contractor's executed Work. Based on information obtained during such visits and observations, Engineer, for the benefit of Owner, will determine, in general, if the Work is proceeding in accordance with the Contract Documents. Engineer will not be required to make exhaustive or continuous inspections on the Site to check the quality or quantity of the Work. Engineer's efforts will be directed toward providing for Owner a greater degree of confidence that the completed Work will conform generally to the Contract Documents. On

Copyright© 2018 National Society of Professional Engineers, American Council of Engineering Companies, and American Society of Civil Engineers. All rights reserved.

the basis of such visits and observations, Engineer will keep Owner informed of the progress of the Work and will endeavor to guard Owner against defective Work.

B. Engineer's visits and observations are subject to all the limitations on Engineer's authority and responsibility set forth in Paragraph 10.07. Particularly, but without limitation, during or as a result of Engineer's visits or observations of Contractor's Work, Engineer will not supervise, direct, control, or have authority over or be responsible for Contractor's means, methods, techniques, sequences, or procedures of construction, or the safety precautions and programs incident thereto, or for any failure of Contractor to comply with Laws and Regulations applicable to the performance of the Work.

10.03 *Resident Project Representative*

A. If Owner and Engineer have agreed that Engineer will furnish a Resident Project Representative to represent Engineer at the Site and assist Engineer in observing the progress and quality of the Work, then the authority and responsibilities of any such Resident Project Representative will be as provided in the Supplementary Conditions, and limitations on the responsibilities thereof will be as provided in the Supplementary Conditions and in Paragraph 10.07.

B. If Owner designates an individual or entity who is not Engineer's consultant, agent, or employee to represent Owner at the Site, then the responsibilities and authority of such individual or entity will be as provided in the Supplementary Conditions.

10.04 *Engineer's Authority*

A. Engineer has the authority to reject Work in accordance with Article 14.

B. Engineer's authority as to Submittals is set forth in Paragraph 7.16.

C. Engineer's authority as to design drawings, calculations, specifications, certifications and other Submittals from Contractor in response to Owner's delegation (if any) to Contractor of professional design services, is set forth in Paragraph 7.19.

D. Engineer's authority as to changes in the Work is set forth in Article 11.

E. Engineer's authority as to Applications for Payment is set forth in Article 15.

10.05 *Determinations for Unit Price Work*

A. Engineer will determine the actual quantities and classifications of Unit Price Work performed by Contractor as set forth in Paragraph 13.03.

10.06 *Decisions on Requirements of Contract Documents and Acceptability of Work*

A. Engineer will render decisions regarding the requirements of the Contract Documents, and judge the acceptability of the Work, pursuant to the specific procedures set forth herein for initial interpretations, Change Proposals, and acceptance of the Work. In rendering such decisions and judgments, Engineer will not show partiality to Owner or Contractor, and will not be liable to Owner, Contractor, or others in connection with any proceedings, interpretations, decisions, or judgments conducted or rendered in good faith.

Copyright© 2018 National Society of Professional Engineers, American Council of Engineering Companies, and American Society of Civil Engineers. All rights reserved.

10.07 *Limitations on Engineer's Authority and Responsibilities*

A. Neither Engineer's authority or responsibility under this Article 10 or under any other provision of the Contract, nor any decision made by Engineer in good faith either to exercise or not exercise such authority or responsibility or the undertaking, exercise, or performance of any authority or responsibility by Engineer, will create, impose, or give rise to any duty in contract, tort, or otherwise owed by Engineer to Contractor, any Subcontractor, any Supplier, any other individual or entity, or to any surety for or employee or agent of any of them.

B. Engineer will not supervise, direct, control, or have authority over or be responsible for Contractor's means, methods, techniques, sequences, or procedures of construction, or the safety precautions and programs incident thereto, or for any failure of Contractor to comply with Laws and Regulations applicable to the performance of the Work. Engineer will not be responsible for Contractor's failure to perform the Work in accordance with the Contract Documents.

C. Engineer will not be responsible for the acts or omissions of Contractor or of any Subcontractor, any Supplier, or of any other individual or entity performing any of the Work.

D. Engineer's review of the final Application for Payment and accompanying documentation, and all maintenance and operating instructions, schedules, guarantees, bonds, certificates of inspection, tests and approvals, and other documentation required to be delivered by Contractor under Paragraph 15.06.A, will only be to determine generally that their content complies with the requirements of, and in the case of certificates of inspections, tests, and approvals, that the results certified indicate compliance with the Contract Documents.

E. The limitations upon authority and responsibility set forth in this Paragraph 10.07 also apply to the Resident Project Representative, if any.

10.08 *Compliance with Safety Program*

A. While at the Site, Engineer's employees and representatives will comply with the specific applicable requirements of Owner's and Contractor's safety programs of which Engineer has been informed.

ARTICLE 11—CHANGES TO THE CONTRACT

11.01 *Amending and Supplementing the Contract*

A. The Contract may be amended or supplemented by a Change Order, an Emergency Work Change Directive, or a Field Order.

B. If an amendment or supplement to the Contract includes a change in the Contract Price or the Contract Times, such amendment or supplement must be set forth in a Change Order.

C. All changes to the Contract that involve (1) the performance or acceptability of the Work, (2) the design (as set forth in the Drawings, Specifications, or otherwise), or (3) other engineering or technical matters, must be supported by Engineer's recommendation. Owner and Contractor may amend other terms and conditions of the Contract without the recommendation of the Engineer.

Copyright© 2018 National Society of Professional Engineers, American Council of Engineering Companies, and American Society of Civil Engineers. All rights reserved.

11.02 *Change Orders*

A. Owner and Contractor shall execute appropriate Change Orders covering:

1. Changes in Contract Price or Contract Times which are agreed to by the parties, including any undisputed sum or amount of time for Work actually performed in accordance with an Emergency Work Change Directive;

2. Changes in Contract Price resulting from an Owner set-off, unless Contractor has duly contested such set-off;

3. Changes in the Work which are: (a) ordered by Owner pursuant to Paragraph 11.05, (b) required because of Owner's acceptance of defective Work under Paragraph 14.04 or Owner's correction of defective Work under Paragraph 14.07, or (c) agreed to by the parties, subject to the need for Engineer's recommendation if the change in the Work involves the design (as set forth in the Drawings, Specifications, or otherwise) or other engineering or technical matters; and

4. Changes that embody the substance of any final and binding results under: Paragraph 11.03.B, resolving the impact of an Emergency Work Change Directive; Paragraph 11.09, concerning Change Proposals; Article 12, Claims; Paragraph 13.02.D, final adjustments resulting from allowances; Paragraph 13.03.D, final adjustments relating to determination of quantities for Unit Price Work; and similar provisions.

B. If Owner or Contractor refuses to execute a Change Order that is required to be executed under the terms of Paragraph 11.02.A, it will be deemed to be of full force and effect, as if fully executed.

11.03 Emergency *Work Change Directives*

A. An Emergency Work Change Directive may only be used in emergency situations and will not change the Contract Price or the Contract Times but is evidence that the parties expect that the modification documented by an Emergency Work Change Directive will be incorporated in a subsequently issued Change Order, following negotiations by the parties as to the Emergency Work Change Directive's effect, if any, on the Contract Price and Contract Times; or, if negotiations are unsuccessful, by a determination under the terms of the Contract Documents governing adjustments, expressly including Paragraph 11.07 regarding change of Contract Price.

B. If Owner has issued a written Emergency Work Change Directive and:

1. Contractor believes that an adjustment in Contract Times or Contract Price is necessary, then Contractor shall submit any Change Proposal seeking such an adjustment no later than 30 days after the completion of the Work set out in the Work Change Directive.

2. Owner believes that an adjustment in Contract Times or Contract Price is necessary, then Owner shall submit a Change Order including an adjustment no later than 60 days after issuance of the Work Change Directive.

11.04 *Field Orders*

A. Engineer may authorize minor changes in the Work if the changes do not involve an adjustment in the Contract Price or the Contract Times and are compatible with the design

Copyright© 2018 National Society of Professional Engineers, American Council of Engineering Companies, and American Society of Civil Engineers. All rights reserved.

concept of the completed Project as a functioning whole as indicated by the Contract Documents. Such changes will be accomplished by a Field Order and will be binding on Owner and also on Contractor, which shall perform the Work involved promptly.

B. If Contractor believes that a Field Order justifies an adjustment in the Contract Price or Contract Times, then before proceeding with the Work at issue, Contractor shall submit a Change Proposal as provided herein.

11.05 *Owner-Authorized Changes in the Work*

A. Without invalidating the Contract and without notice to any surety, Owner may, at any time or from time to time, order additions, deletions, or revisions in the Work. Changes involving the design (as set forth in the Drawings, Specifications, or otherwise) or other engineering or technical matters will be supported by Engineer's recommendation.

B. Such changes in the Work may be accomplished by a Change Order, if Owner and Contractor have agreed as to the effect, if any, of the changes on Contract Times or Contract Price; or by a Work Change Directive. Upon receipt of any such document, Contractor shall promptly proceed with the Work involved; or, in the case of a deletion in the Work, promptly cease construction activities with respect to such deleted Work. Added or revised Work must be performed under the applicable conditions of the Contract Documents.

C. Nothing in this Paragraph 11.05 obligates Contractor to undertake work that Contractor reasonably concludes cannot be performed in a manner consistent with Contractor's safety obligations under the Contract Documents or Laws and Regulations.

11.06 *Unauthorized Changes in the Work*

A. Contractor shall not be entitled to an increase in the Contract Price or an extension of the Contract Times with respect to any work performed that is not required by the Contract Documents, as amended, modified, or supplemented, except in the case of an emergency as provided in Paragraph 7.15 or in the case of uncovering Work as provided in Paragraph 14.05.C.2.

11.07 *Change of Contract Price*

A. The Contract Price may only be changed by a Change Order. Any Change Proposal for an adjustment in the Contract Price must comply with the provisions of Paragraph 11.09. Any Claim for an adjustment of Contract Price must comply with the provisions of Article 12.

B. An adjustment in the Contract Price will be determined as follows:

1. Where the Work involved is covered by unit prices contained in the Contract Documents, then by application of such unit prices to the quantities of the items involved (subject to the provisions of Paragraph 13.03);

2. Where the Work involved is not covered by unit prices contained in the Contract Documents, then by a mutually agreed lump sum (which may include an allowance for overhead and profit not necessarily in accordance with Paragraph 11.07.C.2); or

3. Where the Work involved is not covered by unit prices contained in the Contract Documents and the parties do not reach mutual agreement to a lump sum, then on the

Copyright© 2018 National Society of Professional Engineers, American Council of Engineering Companies, and American Society of Civil Engineers. All rights reserved.

basis of the Cost of the Work (determined as provided in Paragraph 13.01) plus a Contractor's fee for overhead and profit (determined as provided in Paragraph 11.07.C).

C. *Contractor's Fee*: When applicable, the Contractor's fee for overhead and profit will be determined as follows:

1. A mutually acceptable fixed fee; or

2. If a fixed fee is not agreed upon, then a fee based on the following percentages of the various portions of the Cost of the Work:

a. For costs incurred under Paragraphs 13.01.B.1 and 13.01.B.2, the Contractor's fee will be 15 percent;

b. For costs incurred under Paragraph 13.01.B.3, the Contractor's fee will be 5 percent;

c. Where one or more tiers of subcontracts are on the basis of Cost of the Work plus a fee and no fixed fee is agreed upon, the intent of Paragraphs 11.07.C.2.a and 11.07.C.2.b is that the Contractor's fee will be based on: (1) a fee of 15 percent of the costs incurred under Paragraphs 13.01.B.1 and 13.01.B.2 by the Subcontractor that actually performs the Work, at whatever tier, and (2) with respect to Contractor itself and to any Subcontractors of a tier higher than that of the Subcontractor that actually performs the Work, a fee of 5 percent of the amount (fee plus underlying costs incurred) attributable to the next lower tier Subcontractor; provided, however, that for any such subcontracted Work the maximum total fee to be paid by Owner will be no greater than 27 percent of the costs incurred by the Subcontractor that actually performs the Work;

d. No fee will be payable on the basis of costs itemized under Paragraphs 13.01.B.4, 13.01.B.5, and 13.01.C;

e. The amount of credit to be allowed by Contractor to Owner for any change which results in a net decrease in Cost of the Work will be the amount of the actual net decrease in Cost of the Work and a deduction of an additional amount equal to 5 percent of such actual net decrease in Cost of the Work; and

f. When both additions and credits are involved in any one change or Change Proposal, the adjustment in Contractor's fee will be computed by determining the sum of the costs in each of the cost categories in Paragraph 13.01.B (specifically, payroll costs, Paragraph 13.01.B.1; incorporated materials and equipment costs, Paragraph 13.01.B.2; Subcontract costs, Paragraph 13.01.B.3; special consultants costs, Paragraph 13.01.B.4; and other costs, Paragraph 13.01.B.5) and applying to each such cost category sum the appropriate fee from Paragraphs 11.07.C.2.a through 11.07.C.2.e, inclusive.

11.08 *Change of Contract Times*

A. The Contract Times may only be changed by a Change Order. Any Change Proposal for an adjustment in the Contract Times must comply with the provisions of Paragraph 11.09. Any Claim for an adjustment in the Contract Times must comply with the provisions of Article 12.

Copyright© 2018 National Society of Professional Engineers, American Council of Engineering Companies, and American Society of Civil Engineers. All rights reserved.

B. Delay, disruption, and interference in the Work, and any related changes in Contract Times, are addressed in and governed by Paragraph 4.05.

11.09 *Change Proposals*

A. *Purpose and Content*: Contractor shall submit a Change Proposal to Engineer to request an adjustment in the Contract Times or Contract Price; contest an initial decision by Engineer concerning the requirements of the Contract Documents or relating to the acceptability of the Work under the Contract Documents; challenge a set-off against payment due; or seek other relief under the Contract. The Change Proposal will specify any proposed change in Contract Times or Contract Price, or other proposed relief, and explain the reason for the proposed change, with citations to any governing or applicable provisions of the Contract Documents. Each Change Proposal will address only one issue, or a set of closely related issues.

B. *Change Proposal Procedures*

1. *Submittal*: Contractor shall submit each Change Proposal to Engineer within 30 days after the start of the event giving rise thereto, or after such initial decision.

2. *Supporting Data*: The Contractor shall submit supporting data, including the proposed change in Contract Price or Contract Time (if any), to the Engineer and Owner within 15 days after the submittal of the Change Proposal.

   a. Change Proposals based on or related to delay, interruption, or interference must comply with the provisions of Paragraphs 4.05.D and 4.05.E.

   b. Change proposals related to a change of Contract Price must include full and detailed accounts of materials incorporated into the Work and labor and equipment used for the subject Work.

   The supporting data must be accompanied by a written statement that the supporting data are accurate and complete, and that any requested time or price adjustment is the entire adjustment to which Contractor believes it is entitled as a result of said event.

3. *Engineer's Initial Review*: Engineer will advise Owner regarding the Change Proposal, and consider any comments or response from Owner regarding the Change Proposal. If in its discretion Engineer concludes that additional supporting data is needed before conducting a full review and making a recommendation regarding the Change Proposal, then Engineer may request that Contractor submit such additional supporting data by a date specified by Engineer, prior to Engineer beginning its full review of the Change Proposal.

4. *Engineer's Full Review and Recommendation on the Change Proposal*: Upon receipt of Contractor's supporting data (including any additional data requested by Engineer), Engineer will conduct a full review of each Change Proposal and, within 30 days after such receipt of the Contractor's supporting data, either recommend approval of the Change Proposal in whole, deny it in whole, or approve it in part and deny it in part. Such actions must be in writing, with a copy provided to Owner and Contractor. If Engineer does not take action on the Change Proposal within 30 days, then either Owner or Contractor may at any time thereafter submit a letter to the other party indicating that as a result of

Copyright© 2018 National Society of Professional Engineers, American Council of Engineering Companies, and American Society of Civil Engineers. All rights reserved.

Engineer's inaction the Change Proposal is deemed denied, thereby commencing the time for appeal of the denial under Article 12.

5. *Binding Decision*: Engineer's recommendation is sent to the Owner who shall render a final decision. The Owner's decision is final and binding upon Contractor, unless Contractor appeals the decision by filing a Claim under Article 12.

C. *Resolution of Certain Change Proposals*: If the Change Proposal does not involve the design (as set forth in the Drawings, Specifications, or otherwise), the acceptability of the Work, or other engineering or technical matters, then Engineer will notify the parties in writing that the Engineer is unable to resolve the Change Proposal. For purposes of further resolution of such a Change Proposal, such notice will be deemed a denial, and Contractor may choose to seek resolution under the terms of Article 12.

D. *Post-Completion*: Contractor shall not submit any Change Proposals after Engineer issues a written recommendation of final payment pursuant to Paragraph 15.06.B.

11.10 *Notification to Surety*

A. If the provisions of any bond require notice to be given to a surety of any change affecting the general scope of the Work or the provisions of the Contract Documents (including, but not limited to, Contract Price or Contract Times), the giving of any such notice will be Contractor's responsibility. The amount of each applicable bond will be adjusted to reflect the effect of any such change.

Copyright© 2018 National Society of Professional Engineers, American Council of Engineering Companies, and American Society of Civil Engineers. All rights reserved.

ARTICLE 12—CLAIMS - DELETED IN ITS ENTIRETY

12.01 *Claims* - Deleted in its entirety.

A. Deleted in its entirety.

1. Deleted in its entirety.

2. Deleted in its entirety.

3. Deleted in its entirety.

4. Deleted in its entirety.

B. Deleted in its entirety.

C. Deleted in its entirety.

D. Deleted in its entirety.

1. Deleted in its entirety.

2. Deleted in its entirety.

3. Deleted in its entirety.

E. Deleted in its entirety.

F. Deleted in its entirety.

G. Deleted in its entirety.

ARTICLE 13—COST OF THE WORK; ALLOWANCES; UNIT PRICE WORK

13.01 *Cost of the Work*

A. *Purposes for Determination of Cost of the Work*: The term Cost of the Work means the sum of all costs necessary for the proper performance of the Work at issue, as further defined below. The provisions of this Paragraph 13.01 are used for two distinct purposes:

1. To determine Cost of the Work when Cost of the Work is a component of the Contract Price, under cost-plus-fee, time-and-materials, or other cost-based terms; or

2. When needed to determine the value of a Change Order, Change Proposal, Claim, set-off, or other adjustment in Contract Price. When the value of any such adjustment is determined on the basis of Cost of the Work, Contractor is entitled only to those additional or incremental costs required because of the change in the Work or because of the event giving rise to the adjustment.

B. *Costs Included*: Except as otherwise may be agreed to in writing by Owner, costs included in the Cost of the Work will be in amounts no higher than those commonly incurred in the locality of the Project, will not include any of the costs itemized in Paragraph 13.01.C, and will include only the following items:

1. Payroll costs for employees in the direct employ of Contractor in the performance of the Work under schedules of job classifications agreed upon by Owner and Contractor in advance of the subject Work. Such employees include, without limitation,

Copyright© 2018 National Society of Professional Engineers, American Council of Engineering Companies, and American Society of Civil Engineers. All rights reserved.

superintendents, foremen, safety managers, safety representatives, and other personnel employed full time on the Work. Payroll costs for employees not employed full time on the Work will be apportioned on the basis of their time spent on the Work. Payroll costs include, but are not limited to, salaries and wages plus the cost of fringe benefits, which include social security contributions, unemployment, excise, and payroll taxes, workers' compensation, health and retirement benefits, sick leave, and vacation and holiday pay applicable thereto. The expenses of performing Work outside of regular working hours, on Saturday, Sunday, or legal holidays, will be included in the above to the extent authorized by Owner.

2. Cost of all materials and equipment furnished and incorporated in the Work, including costs of transportation and storage thereof, and Suppliers' field services required in connection therewith. All cash discounts accrue to Contractor unless Owner deposits funds with Contractor with which to make payments, in which case the cash discounts will accrue to Owner. All trade discounts, rebates, and refunds and returns from sale of surplus materials and equipment will accrue to Owner, and Contractor shall make provisions so that they may be obtained.

3. Payments made by Contractor to Subcontractors for Work performed by Subcontractors. If required by Owner, Contractor shall obtain competitive bids from subcontractors acceptable to Owner and Contractor and shall deliver such bids to Owner, which will then determine, with the advice of Engineer, which bids, if any, will be acceptable. If any subcontract provides that the Subcontractor is to be paid on the basis of Cost of the Work plus a fee, the Subcontractor's Cost of the Work and fee will be determined in the same manner as Contractor's Cost of the Work and fee as provided in this Paragraph 13.01.

4. Costs of special consultants (including but not limited to engineers, architects, testing laboratories, and surveyors) employed or retained for services specifically related to the Work.

5. Other costs consisting of the following:

    a. The proportion of necessary transportation, travel, and subsistence expenses of Contractor's employees incurred in discharge of duties connected with the Work.

    b. Cost, including transportation and maintenance, of all materials, supplies, equipment, machinery, appliances, office, and temporary facilities at the Site, which are consumed in the performance of the Work, and cost, less market value, of such items used but not consumed which remain the property of Contractor.

        1) In establishing included costs for materials such as scaffolding, plating, or sheeting, consideration will be given to the actual or the estimated life of the material for use on other projects; or rental rates may be established on the basis of purchase or salvage value of such items, whichever is less. Contractor will not be eligible for compensation for such items in an amount that exceeds the purchase cost of such item.

    c. *Construction Equipment Rental*

        1) Rentals of all construction equipment and machinery, and the parts thereof, in accordance with rental agreements approved by Owner as to price (including any

Copyright© 2018 National Society of Professional Engineers, American Council of Engineering Companies, and American Society of Civil Engineers. All rights reserved.

surcharge or special rates applicable to overtime use of the construction equipment or machinery), and the costs of transportation, loading, unloading, assembly, dismantling, and removal thereof. All such costs will be in accordance with the terms of said rental agreements. The rental of any such equipment, machinery, or parts must cease when the use thereof is no longer necessary for the Work.

2) Costs for equipment and machinery owned by Contractor or a Contractor-related entity will be paid at a rate shown for such equipment in the equipment rental rate book specified in the Supplementary Conditions. An hourly rate will be computed by dividing the monthly rates by 176. These computed rates will include all operating costs.

3) With respect to Work that is the result of a Change Order, Change Proposal, Claim, set-off, or other adjustment in Contract Price ("changed Work"), included costs will be based on the time the equipment or machinery is in use on the changed Work and the costs of transportation, loading, unloading, assembly, dismantling, and removal when directly attributable to the changed Work. The cost of any such equipment or machinery, or parts thereof, must cease to accrue when the use thereof is no longer necessary for the changed Work.

d. Sales, consumer, use, and other similar taxes related to the Work, and for which Contractor is liable, as imposed by Laws and Regulations.

e. Deposits lost for causes other than negligence of Contractor, any Subcontractor, or anyone directly or indirectly employed by any of them or for whose acts any of them may be liable, and royalty payments and fees for permits and licenses.

f. Losses and damages (and related expenses) caused by damage to the Work, not compensated by insurance or otherwise, sustained by Contractor in connection with the performance of the Work (except losses and damages within the deductible amounts of builder's risk or other property insurance established in accordance with Paragraph 6.04), provided such losses and damages have resulted from causes other than the negligence of Contractor, any Subcontractor, or anyone directly or indirectly employed by any of them or for whose acts any of them may be liable. Such losses include settlements made with the written consent and approval of Owner. No such losses, damages, and expenses will be included in the Cost of the Work for the purpose of determining Contractor's fee.

g. The cost of utilities, fuel, and sanitary facilities at the Site.

h. Minor expenses such as communication service at the Site, express and courier services, and similar petty cash items in connection with the Work.

i. The costs of premiums for all bonds and insurance that Contractor is required by the Contract Documents to purchase and maintain.

C. *Costs Excluded*: The term Cost of the Work does not include any of the following items:

1. Payroll costs and other compensation of Contractor's officers, executives, principals, general managers, engineers, architects, estimators, attorneys, auditors, accountants,

Copyright© 2018 National Society of Professional Engineers, American Council of Engineering Companies, and American Society of Civil Engineers. All rights reserved.

purchasing and contracting agents, expediters, timekeepers, clerks, and other personnel employed by Contractor, whether at the Site or in Contractor's principal or branch office for general administration of the Work and not specifically included in the agreed upon schedule of job classifications referred to in Paragraph 13.01.B.1 or specifically covered by Paragraph 13.01.B.4. The payroll costs and other compensation excluded here are to be considered administrative costs covered by the Contractor's fee.

2. The cost of purchasing, renting, or furnishing small tools and hand tools.

3. Expenses of Contractor's principal and branch offices other than Contractor's office at the Site.

4. Any part of Contractor's capital expenses, including interest on Contractor's capital employed for the Work and charges against Contractor for delinquent payments.

5. Costs due to the negligence, recklessness, or intentional misconduct of Contractor, any Subcontractor, or anyone directly or indirectly employed by any of them or for whose acts any of them may be liable, including but not limited to, the correction of defective Work, disposal of materials or equipment wrongly supplied, and making good any damage to property.

6. Expenses incurred in preparing and advancing Claims.

7. Other overhead or general expense costs of any kind and the costs of any item not specifically and expressly included in Paragraph 13.01.B.

D. *Contractor's Fee*

1. When the Work as a whole is performed on the basis of cost-plus-a-fee, then:

a. Contractor's fee for the Work set forth in the Contract Documents as of the Effective Date of the Contract will be determined as set forth in the Agreement.

b. for any Work covered by a Change Order, Change Proposal, Claim, set-off, or other adjustment in Contract Price on the basis of Cost of the Work, Contractor's fee will be determined as follows:

1) When the fee for the Work as a whole is a percentage of the Cost of the Work, the fee will automatically adjust as the Cost of the Work changes.

2) When the fee for the Work as a whole is a fixed fee, the fee for any additions or deletions will be determined in accordance with Paragraph 11.07.C.2.

2. When the Work as a whole is performed on the basis of a stipulated sum, or any other basis other than cost-plus-a-fee, then Contractor's fee for any Work covered by a Change Order, Change Proposal, Claim, set-off, or other adjustment in Contract Price on the basis of Cost of the Work will be determined in accordance with Paragraph 11.07.C.2.

E. *Documentation and Audit*: Whenever the Cost of the Work for any purpose is to be determined pursuant to this Article 13, Contractor and pertinent Subcontractors will establish and maintain records of the costs in accordance with generally accepted accounting practices. Subject to prior written notice, Owner will be afforded reasonable access, during normal business hours, to all Contractor's accounts, records, books, correspondence, instructions,

Copyright© 2018 National Society of Professional Engineers, American Council of Engineering Companies, and American Society of Civil Engineers. All rights reserved.

drawings, receipts, vouchers, memoranda, and similar data relating to the Cost of the Work and Contractor's fee. Contractor shall preserve all such documents for a period of three years after the final payment by Owner. Pertinent Subcontractors will afford such access to Owner, and preserve such documents, to the same extent required of Contractor.

13.02 *Allowances*

A. It is understood that Contractor has included in the Contract Price all allowances so named in the Contract Documents and shall cause the Work so covered to be performed for such sums and by such persons or entities as may be acceptable to Owner and Engineer.

B. *Cash Allowances*: Contractor agrees that:

1. the cash allowances include the cost to Contractor (less any applicable trade discounts) of materials and equipment required by the allowances to be delivered at the Site, and all applicable taxes; and

2. Contractor's costs for unloading and handling on the Site, labor, installation, overhead, profit, and other expenses contemplated for the cash allowances have been included in the Contract Price and not in the allowances, and no demand for additional payment for any of the foregoing will be valid.

C. *Owner's Contingency Allowance*: Contractor agrees that an Owner's contingency allowance, if any, is for the sole use of Owner to cover unanticipated costs.

D. Prior to final payment, an appropriate Change Order will be issued as recommended by Engineer to reflect actual amounts due Contractor for Work covered by allowances, and the Contract Price will be correspondingly adjusted.

13.03 *Unit Price Work*

A. Where the Contract Documents provide that all or part of the Work is to be Unit Price Work, initially the Contract Price will be deemed to include for all Unit Price Work an amount equal to the sum of the unit price for each separately identified item of Unit Price Work times the estimated quantity of each item as indicated in the Agreement.

B. The estimated quantities of items of Unit Price Work are estimates and are solely for the purpose of comparison of Bids and determining an initial Contract Price. Payments to Contractor for Unit Price Work will be based on actual quantities.

C. Each unit price shall be guaranteed and will be deemed to include an amount considered by Contractor to be adequate to cover Contractor's overhead and profit for each separately identified item.

D. Engineer will determine the actual quantities and classifications of Unit Price Work performed by Contractor. Engineer will review with Contractor the Engineer's preliminary determinations on such matters before rendering a written decision thereon (by recommendation of an Application for Payment or otherwise). Engineer's written decision thereon will be final and binding (except as modified by Engineer to reflect changed factual conditions or more accurate data) upon Owner and Contractor, and the final adjustment of Contract Price will be set forth in a Change Order, subject to the provisions of the following paragraph.

Copyright© 2018 National Society of Professional Engineers, American Council of Engineering Companies, and American Society of Civil Engineers. All rights reserved.

E. *Adjustments in Unit Price*

1. Contractor or Owner shall be entitled to an adjustment in the unit price with respect to an item of Unit Price Work if:

   a. the quantity of the item of Unit Price Work performed by Contractor differs materially and significantly from the estimated quantity of such item indicated in the Agreement; and

   b. Contractor's unit costs to perform the item of Unit Price Work have changed materially and significantly as a result of the quantity change.

2. The adjustment in unit price will account for and be coordinated with any related changes in quantities of other items of Work, and in Contractor's costs to perform such other Work, such that the resulting overall change in Contract Price is equitable to Owner and Contractor.

3. Adjusted unit prices will apply to all units of that item.

ARTICLE 14—TESTS AND INSPECTIONS; CORRECTION, REMOVAL, OR ACCEPTANCE OF DEFECTIVE WORK

14.01 *Access to Work*

A. Owner, Engineer, their consultants and other representatives and personnel of Owner, independent testing laboratories, and authorities having jurisdiction have access to the Site and the Work at reasonable times for their observation, inspection, and testing. Contractor shall provide them proper and safe conditions for such access and advise them of Contractor's safety procedures and programs so that they may comply with such procedures and programs as applicable.

14.02 *Tests, Inspections, and Approvals*

A. Contractor shall give Engineer timely notice of readiness of the Work (or specific parts thereof) for all required inspections and tests, and shall cooperate with inspection and testing personnel to facilitate required inspections and tests.

B. Owner shall retain and pay for the services of an independent inspector, testing laboratory, or other qualified individual or entity to perform all inspections and tests expressly required by the Contract Documents to be furnished and paid for by Owner, except that costs incurred in connection with tests or inspections of covered Work will be governed by the provisions of Paragraph 14.05.

C. If Laws or Regulations of any public body having jurisdiction require any Work (or part thereof) specifically to be inspected, tested, or approved by an employee or other representative of such public body, Contractor shall assume full responsibility for arranging and obtaining such inspections, tests, or approvals, pay all costs in connection therewith, and furnish Engineer the required certificates of inspection or approval.

D. Contractor shall be responsible for arranging, obtaining, and paying for all inspections and tests required:

1. by the Contract Documents, unless the Contract Documents expressly allocate responsibility for a specific inspection or test to Owner;

Copyright© 2018 National Society of Professional Engineers, American Council of Engineering Companies, and American Society of Civil Engineers. All rights reserved.

2. to attain Owner's and Engineer's acceptance of materials or equipment to be incorporated in the Work;

3. by manufacturers of equipment furnished under the Contract Documents;

4. for testing, adjusting, and balancing of mechanical, electrical, and other equipment to be incorporated into the Work; and

5. for acceptance of materials, mix designs, or equipment submitted for approval prior to Contractor's purchase thereof for incorporation in the Work.

Such inspections and tests will be performed by independent inspectors, testing laboratories, or other qualified individuals or entities acceptable to Owner and Engineer.

E. If the Contract Documents require the Work (or part thereof) to be approved by Owner, Engineer, or another designated individual or entity, then Contractor shall assume full responsibility for arranging and obtaining such approvals.

F. If any Work (or the work of others) that is to be inspected, tested, or approved is covered by Contractor without written concurrence of Engineer, Contractor shall, if requested by Engineer, uncover such Work for observation. Such uncovering will be at Contractor's expense unless Contractor had given Engineer timely notice of Contractor's intention to cover the same and Engineer had not acted with reasonable promptness in response to such notice.

14.03 *Defective Work*

A. *Contractor's Obligation*: It is Contractor's obligation to assure that the Work is not defective.

B. *Engineer's Authority*: Engineer has the authority to determine whether Work is defective, and to reject defective Work.

C. *Notice of Defects*: Prompt written notice of all defective Work of which Owner or Engineer has actual knowledge will be given to Contractor.

D. *Correction, or Removal and Replacement*: Promptly after receipt of written notice of defective Work, Contractor shall correct all such defective Work, whether or not fabricated, installed, or completed, or, if Engineer has rejected the defective Work, remove it from the Project and replace it with Work that is not defective.

E. *Preservation of Warranties*: When correcting defective Work, Contractor shall take no action that would void or otherwise impair Owner's special warranty and guarantee, if any, on said Work.

F. *Costs and Damages*: In addition to its correction, removal, and replacement obligations with respect to defective Work, Contractor shall pay all claims, costs, losses, and damages arising out of or relating to defective Work, including but not limited to the cost of the inspection, testing, correction, removal, replacement, or reconstruction of such defective Work, fines levied against Owner by governmental authorities because the Work is defective, and the costs of repair or replacement of work of others resulting from defective Work. Prior to final payment, if Owner and Contractor are unable to agree as to the measure of such claims, costs, losses, and damages resulting from defective Work, then Owner may impose a reasonable set-off against payments due under Article 15.

Copyright© 2018 National Society of Professional Engineers, American Council of Engineering Companies, and American Society of Civil Engineers. All rights reserved.

14.04 *Acceptance of Defective Work*

A. If, instead of requiring correction or removal and replacement of defective Work, Owner prefers to accept it, Owner may do so (subject, if such acceptance occurs prior to final payment, to Engineer's confirmation that such acceptance is in general accord with the design intent and applicable engineering principles, and will not endanger public safety). Contractor shall pay all claims, costs, losses, and damages attributable to Owner's evaluation of and determination to accept such defective Work (such costs to be approved by Engineer as to reasonableness), and for the diminished value of the Work to the extent not otherwise paid by Contractor. If any such acceptance occurs prior to final payment, the necessary revisions in the Contract Documents with respect to the Work will be incorporated in a Change Order. If the parties are unable to agree as to the decrease in the Contract Price, reflecting the diminished value of Work so accepted, then Owner may impose a reasonable set-off against payments due under Article 15. If the acceptance of defective Work occurs after final payment, Contractor shall pay an appropriate amount to Owner.

B. Owner shall not be deemed to have accepted any defective work from Contractor that was not discovered by Engineer or Owner unless the defect was specifically detailed to Owner in writing by Contractor notifying Owner of the defective work and Owner notifies Contractor in writing that it will accept defective work (whether as-is, by receiving credit, or receiving other compensation, losses, or damage from Contractor as discussed above in Paragraph 14.04.A.) Contractor recognizes and understands that it shall not be relieved of responsibility or liability with performing defective work even if such defective work previously passed inspection by any inspector, including, without limitation, an inspector with the governing building department or a threshold inspector.

14.05 *Uncovering Work*

A. Engineer has the authority to require additional inspection or testing of the Work, whether or not the Work is fabricated, installed, or completed.

B. If any Work is covered contrary to the written request of Engineer, then Contractor shall, if requested by Engineer, uncover such Work for Engineer's observation, and then replace the covering, all at Contractor's expense.

C. If Engineer considers it necessary or advisable that covered Work be observed by Engineer or inspected or tested by others, then Contractor, at Engineer's request, shall uncover, expose, or otherwise make available for observation, inspection, or testing as Engineer may require, that portion of the Work in question, and provide all necessary labor, material, and equipment.

1. If it is found that the uncovered Work is defective, Contractor shall be responsible for all claims, costs, losses, and damages arising out of or relating to such uncovering, exposure, observation, inspection, and testing, and of satisfactory replacement or reconstruction (including but not limited to all costs of repair or replacement of work of others); and pending Contractor's full discharge of this responsibility the Owner shall be entitled to impose a reasonable set-off against payments due under Article 15.

2. If the uncovered Work is not found to be defective, Contractor shall be allowed an increase in the Contract Price or an extension of the Contract Times, directly attributable

Copyright© 2018 National Society of Professional Engineers, American Council of Engineering Companies, and American Society of Civil Engineers. All rights reserved.

to such uncovering, exposure, observation, inspection, testing, replacement, and reconstruction. If the parties are unable to agree as to the amount or extent thereof, then Contractor may submit a Change Proposal within 30 days of the determination that the Work is not defective.

14.06 *Owner May Stop the Work*

A. If the Work is defective, or Contractor fails to supply sufficient skilled workers or suitable materials or equipment, or fails to perform the Work in such a way that the completed Work will conform to the Contract Documents, then Owner may order Contractor to stop the Work, or any portion thereof, until the cause for such order has been eliminated; however, this right of Owner to stop the Work will not give rise to any duty on the part of Owner to exercise this right for the benefit of Contractor, any Subcontractor, any Supplier, any other individual or entity, or any surety for, or employee or agent of any of them. The Owner shall incur no liability for delays occasioned by any stop-work order issued in accordance with this paragraph.

14.07 *Owner May Correct Defective Work*

A. If Contractor fails within a reasonable time after written notice from Engineer to correct defective Work, or to remove and replace defective Work as required by Engineer, then Owner may, after 7 days' written notice to Contractor, correct or remedy any such deficiency.

B. In exercising the rights and remedies under this Paragraph 14.07, Owner shall proceed expeditiously. In connection with such corrective or remedial action, Owner may exclude Contractor from all or part of the Site, take possession of all or part of the Work and suspend Contractor's services related thereto, and incorporate in the Work all materials and equipment stored at the Site or for which Owner has paid Contractor but which are stored elsewhere. Contractor shall allow Owner, Owner's representatives, agents and employees, Owner's other contractors, and Engineer and Engineer's consultants access to the Site to enable Owner to exercise the rights and remedies under this paragraph.

C. All claims, costs, losses, and damages incurred or sustained by Owner in exercising the rights and remedies under this Paragraph 14.07 will be charged against Contractor as set-offs against payments due under Article 15. Such claims, costs, losses and damages will include but not be limited to all costs of repair, or replacement of work of others destroyed or damaged by correction, removal, or replacement of Contractor's defective Work.

D. Contractor shall not be allowed an extension of the Contract Times because of any delay in the performance of the Work attributable to the exercise by Owner of Owner's rights and remedies under this Paragraph 14.07.

ARTICLE 15—PAYMENTS TO CONTRACTOR; SET-OFFS; COMPLETION; CORRECTION PERIOD

15.01 *Progress Payments*

A. *Basis for Progress Payments*: The Schedule of Values established as provided in Article 2 will serve as the basis for progress payments and will be incorporated into a form of Application for Payment acceptable to Engineer and Owner. Progress payments for Unit Price Work will be based on the number of units completed during the pay period, as determined under the

Copyright© 2018 National Society of Professional Engineers, American Council of Engineering Companies, and American Society of Civil Engineers. All rights reserved.

provisions of Paragraph 13.03. Progress payments for cost-based Work will be based on Cost of the Work completed by Contractor during the pay period.

B. *Applications for Payments*

1. Contractor, on the 25th of each month, shall submit to Engineer for review an Application for Payment (in a form approved by Owner) filled out and signed by Contractor covering the Work completed as of the date of the Application and accompanied by such supporting documentation as is required by the Contract Documents.

2. If payment is requested on the basis of materials and equipment not incorporated in the Work but delivered and suitably stored at the Site or at another location agreed to in writing, the Application for Payment must also be accompanied by: (a) a bill of sale, invoice, copies of subcontract or purchase order payments, or other documentation establishing full payment by Contractor for the materials and equipment; (b) at Owner's request, documentation warranting that Owner has received the materials and equipment free and clear of all Liens; and (c) evidence that the materials and equipment are covered by appropriate property insurance, a warehouse bond, or other arrangements to protect Owner's interest therein, all of which must be satisfactory to Owner.

3. Beginning with the second Application for Payment, each Application must include an affidavit of Contractor stating that all previous progress payments received by Contractor have been applied to discharge Contractor's legitimate obligations associated with prior Applications for Payment.

4. The amount of retainage with respect to progress payments will be as stipulated in the Agreement.

C. *Review of Applications*

1. Engineer will, within 10 days after each Application for Payment is stamped as received by Engineer, including each resubmittal, either indicate in writing a recommendation of payment and present the Application to Owner, or return the Application to Contractor indicating in writing Engineer's reasons for refusing to recommend payment and the action necessary to make payment application proper. In the latter case, Contractor shall make the necessary corrections and resubmit the Application.

2. Engineer's recommendation of any payment requested in an Application for Payment will constitute a representation by Engineer to Owner, based on Engineer's observations of the executed Work as an experienced and qualified design professional, and on Engineer's review of the Application for Payment and the accompanying data and schedules, that to the best of Engineer's knowledge, information and belief:

   a. the Work has progressed to the point indicated;

   b. the quality of the Work is generally in accordance with the Contract Documents (subject to an evaluation of the Work as a functioning whole prior to or upon Substantial Completion, the results of any subsequent tests called for in the Contract Documents, a final determination of quantities and classifications for Unit Price Work

Copyright© 2018 National Society of Professional Engineers, American Council of Engineering Companies, and American Society of Civil Engineers. All rights reserved.

under Paragraph 13.03, and any other qualifications stated in the recommendation); and

c. the conditions precedent to Contractor's being entitled to such payment appear to have been fulfilled in so far as it is Engineer's responsibility to observe the Work.

3. By recommending any such payment Engineer will not thereby be deemed to have represented that:

   a. inspections made to check the quality or the quantity of the Work as it has been performed have been exhaustive, extended to every aspect of the Work in progress, or involved detailed inspections of the Work beyond the responsibilities specifically assigned to Engineer in the Contract; or

   b. there may not be other matters or issues between the parties that might entitle Contractor to be paid additionally by Owner or entitle Owner to withhold payment to Contractor.

4. Neither Engineer's review of Contractor's Work for the purposes of recommending payments nor Engineer's recommendation of any payment, including final payment, will impose responsibility on Engineer:

   a. to supervise, direct, or control the Work;

   b. for the means, methods, techniques, sequences, or procedures of construction, or the safety precautions and programs incident thereto;

   c. for Contractor's failure to comply with Laws and Regulations applicable to Contractor's performance of the Work;

   d. to make any examination to ascertain how or for what purposes Contractor has used the money paid by Owner; or

   e. to determine that title to any of the Work, materials, or equipment has passed to Owner free and clear of any Liens.

5. Neither Engineer's review of Contractor's Work for purposes of recommending payments nor Engineer's recommendation of any payment shall relieve Contractor of responsibility or liability for defects in the Work.

6. Engineer may refuse to recommend the whole or any part of any payment if, in Engineer's opinion, it would be incorrect to make the representations to Owner stated in Paragraph 15.01.C.2.

6. Engineer will recommend reductions in payment (set-offs) necessary in Engineer's opinion to protect Owner from loss because:

   a. the Work is defective, requiring correction or replacement;

   b. the Contract Price has been reduced by Change Orders;

   c. Owner has been required to correct defective Work in accordance with Paragraph 14.07, or has accepted defective Work pursuant to Paragraph 14.04;

Copyright© 2018 National Society of Professional Engineers, American Council of Engineering Companies, and American Society of Civil Engineers. All rights reserved.

d. Owner has been required to remove or remediate a Hazardous Environmental Condition for which Contractor is responsible; or

e. Engineer has actual knowledge of the occurrence of any of the events that would constitute a default by Contractor and therefore justify termination for cause under the Contract Documents.

D. *Payment Becomes Due*

1. Subject to the provisions of Paragraph 15.01.E. and Section 218. 735, Florida Statutes, after presentation of the Application for Payment to Owner with Engineer's recommendation, the amount recommended (subject to any Owner set-offs) shall be paid by Owner in accordance with Section 218.735, Florida Statutes, within 25 business days after the date on which the payment application is stamped as received by Engineer.

E. *Reductions in Payment by Owner*

1. In addition to any reductions in payment (set-offs) recommended by Engineer, Owner is entitled to impose a set-off against payment based on any of the following:

a. Claims have been made against Owner based on Contractor's conduct in the performance or furnishing of the Work, or Owner has incurred costs, losses, or damages resulting from Contractor's conduct in the performance or furnishing of the Work, including but not limited to claims, costs, losses, or damages from workplace injuries, adjacent property damage, non-compliance with Laws and Regulations, and patent infringement;

b. Contractor has failed to take reasonable and customary measures to avoid damage, delay, disruption, and interference with other work at or adjacent to the Site;

c. Contractor has failed to provide and maintain required bonds or insurance;

d. Owner has been required to remove or remediate a Hazardous Environmental Condition for which Contractor is responsible;

e. Owner has incurred extra charges or engineering costs related to submittal reviews, evaluations of proposed substitutes, tests and inspections, or return visits to manufacturing or assembly facilities;

f. The Work is defective, requiring correction or replacement;

g. Owner has been required to correct defective Work in accordance with Paragraph 14.07, or has accepted defective Work pursuant to Paragraph 14.04;

h. The Contract Price has been reduced by Change Orders;

i. An event has occurred that would constitute a default by Contractor and therefore justify a termination for cause;

j. Liquidated or other damages have accrued as a result of Contractor's failure to achieve Milestones, Substantial Completion, or final completion of the Work;

k. Liens have been filed in connection with the Work, except where Contractor has delivered a specific bond satisfactory to Owner to secure the satisfaction and discharge of such Liens; or

Copyright© 2018 National Society of Professional Engineers, American Council of Engineering Companies, and American Society of Civil Engineers. All rights reserved.

l. Other items entitle Owner to a set-off against the amount recommended.

2. If Owner imposes any set-off against payment, whether based on its own knowledge or on the written recommendations of Engineer, Owner will give Contractor immediate written notice (with a copy to Engineer) stating the reasons for such action and the specific amount of the reduction, and promptly pay Contractor any amount remaining after deduction of the amount so withheld. Owner shall promptly pay Contractor the amount so withheld, or any adjustment thereto agreed to by Owner and Contractor, if Contractor remedies the reasons for such action. The reduction imposed will be binding on Contractor unless it duly submits a Change Proposal contesting the reduction.

3. Upon a subsequent determination that Owner's refusal of payment was not justified, the amount wrongfully withheld will be treated as an amount due as determined by Paragraph 15.01.D.1 and subject to interest as provided in the Agreement.

15.02 *Contractor's Warranty of Title*

A. Contractor warrants and guarantees that title to all Work, materials, and equipment furnished under the Contract will pass to Owner free and clear of (1) all Liens and other title defects, and (2) all patent, licensing, copyright, or royalty obligations, no later than 7 days after the time of payment by Owner.

15.03 *Substantial Completion*

A. When Contractor considers the entire Work ready for its intended use Contractor shall notify Owner and Engineer in writing that the entire Work is substantially complete and request that Engineer issue a certificate of Substantial Completion. Contractor shall at the same time submit to Owner and Engineer an initial draft of Punch List items to be completed or corrected before final payment. Substantial Completion cannot occur before the Owner is able to begin to utilize the entire Work for the purposes for which it was intended.B. Promptly after Contractor's notification, Owner, Contractor, and Engineer shall make an inspection of the Work to determine the status of completion. If Engineer does not consider the Work substantially complete, Engineer will notify Contractor in writing giving the reasons therefor.

C. If Engineer considers the Work substantially complete, Engineer will deliver to Owner a preliminary certificate of Substantial Completion which will fix the date of Substantial Completion. Engineer shall attach to the certificate a Punch List of items to be completed or corrected before final payment Owner shall have 7 days after receipt of the preliminary certificate during which to make written objection to Engineer as to any provisions of the certificate or attached Punch List. If, after considering the objections to the provisions of the preliminary certificate, Engineer concludes that the Work is not substantially complete, Engineer will, within 14 days after submission of the preliminary certificate to Owner, notify Contractor in writing that the Work is not substantially complete, stating the reasons therefor. If Owner does not object to the provisions of the certificate, or if despite consideration of Owner's objections Engineer concludes that the Work is substantially complete, then Engineer will, within said 14 days, execute and deliver to Owner and Contractor a final certificate of Substantial Completion (with a revised Punch List of items to be completed or corrected) reflecting such changes from the preliminary certificate as Engineer believes justified after consideration of any objections from Owner.

Copyright© 2018 National Society of Professional Engineers, American Council of Engineering Companies, and American Society of Civil Engineers. All rights reserved.

D. At the time of receipt of the preliminary certificate of Substantial Completion, Owner and Contractor will confer regarding Owner's use or occupancy of the Work following Substantial Completion, review the builder's risk insurance policy with respect to the end of the builder's risk coverage, and confirm the transition to coverage of the Work under a permanent property insurance policy held by Owner. Unless Owner and Contractor agree otherwise in writing, Owner shall bear responsibility for security, operation, protection of the Work, property insurance, maintenance, heat, and utilities upon Owner's use or occupancy of the Work.

E. After Substantial Completion the Contractor shall promptly begin work on the Punch List of items to be completed or corrected prior to final payment. In appropriate cases Contractor may submit monthly Applications for Payment for completed Punch List items, following the progress payment procedures set forth above.

F. Owner shall have the right to exclude Contractor from the Site after the date of Substantial Completion subject to allowing Contractor reasonable access to remove its property and complete or correct items on the Punch List.

15.04 *Partial Use or Occupancy*

A. Prior to Substantial Completion of all the Work, Owner may use or occupy any substantially completed part of the Work which has specifically been identified in the Contract Documents, or which Owner, Engineer, and Contractor agree constitutes a separately functioning and usable part of the Work that can be used by Owner for its intended purpose without significant interference with Contractor's performance of the remainder of the Work, subject to the following conditions:

1. At any time, Owner may request in writing that Contractor permit Owner to use or occupy any such part of the Work that Owner believes to be substantially complete. If and when Contractor agrees that such part of the Work is substantially complete, Contractor, Owner, and Engineer will follow the procedures of Paragraph 15.03.A through 15.03.E for that part of the Work.

2. At any time, Contractor may notify Owner and Engineer in writing that Contractor considers any such part of the Work substantially complete and request Engineer to issue a certificate of Substantial Completion for that part of the Work.

3. Within a reasonable time after either such request, Owner, Contractor, and Engineer shall make an inspection of that part of the Work to determine its status of completion. If Engineer does not consider that part of the Work to be substantially complete, Engineer will notify Owner and Contractor in writing giving the reasons therefor. If Engineer considers that part of the Work to be substantially complete, the provisions of Paragraph 15.03 will apply with respect to certification of Substantial Completion of that part of the Work and the division of responsibility in respect thereof and access thereto.

4. No use or occupancy or separate operation of part of the Work may occur prior to compliance with the requirements of Paragraph 6.04 regarding builder's risk or other property insurance.

Copyright© 2018 National Society of Professional Engineers, American Council of Engineering Companies, and American Society of Civil Engineers. All rights reserved.

15.05 *Final Inspection – Punch List*

A. Upon written notice from Contractor that the entire Work or an agreed portion thereof is complete, Engineer will promptly make a final inspection with Owner and Contractor and will notify Contractor in writing of all particulars in which this inspection reveals that the Work, or agreed portion thereof, is incomplete or defective. Contractor shall immediately take such measures as are necessary to complete such Work or remedy such deficiencies.

15.06 *Final Payment*

A. *Application for Payment*

1. After Contractor has, in the opinion of Engineer, satisfactorily completed all corrections identified during the final inspection and has delivered, in accordance with the Contract Documents, all maintenance and operating instructions, schedules, guarantees, bonds, certificates or other evidence of insurance, certificates of inspection, annotated record documents (as provided in Paragraph 7.12), and other documents, Contractor may make application for final payment.

2. The final Application for Payment must be accompanied (except as previously delivered) by:

   a. all documentation called for in the Contract Documents, including but not limited to, the evidence that Contractor maintains completed operations coverage for its required commercial general liability (CGL) insurance;

   b. consent of the surety, if any, to final payment;

   c. satisfactory evidence that all title issues have been resolved such that title to all Work, materials, and equipment has passed to Owner free and clear of any Liens or other title defects, or will so pass upon final payment.

   d. a list of all duly pending Change Proposals and Claims; and

   e. complete and legally effective final releases or waivers (satisfactory to Owner) of all Lien rights and Liens filed in connection with the Work.

3. In lieu of the final releases or waivers of Liens specified in Paragraph 15.06.A.2 and as approved by Owner, Contractor may furnish receipts or releases in full and an affidavit of Contractor whereby Contractor swears that: (a) all payrolls, services, material, and equipment bills and other indebtedness connected with the Work for which Owner has paid Contractor through the date of Contractor's final Application for Payment have been paid by Contractor; and (b) all payrolls, material and equipment bills, and other indebtedness connected with the Work for which Owner will pay Contractor in the final Application for Payment will represent Contractor's receipt of all payments for the Work except for the specifically enumerated Claims (and Claims not specifically enumerated are deemed released and waived) and that Contractor will promptly pay its Subcontractors and Suppliers upon its receipt of the final payment. If any Subcontractor or Supplier fails to furnish such a release or receipt in full, Contractor may furnish a bond or other collateral satisfactory to Owner to indemnify Owner against any Lien, or Owner at its

Copyright© 2018 National Society of Professional Engineers, American Council of Engineering Companies, and American Society of Civil Engineers. All rights reserved.

option may issue joint checks payable to Contractor and specified Subcontractors and Suppliers.

4. The documents and materials that Contractor is required to submit to accompany its Final Application for Payment (as set forth in this Paragraph 15.06) are conditions precedent to issuance of final payment.

B. *Engineer's Review of Final Application and Recommendation of Payment*: If, on the basis of Engineer's observation of the Work during construction and final inspection, and Engineer's review of the final Application for Payment and accompanying documentation as required by the Contract Documents, Engineer is satisfied that the Work has been completed and Contractor's other obligations under the Contract have been fulfilled, Engineer will, within 10 days after receipt of the final Application for Payment, indicate in writing Engineer's recommendation of final payment and present the final Application for Payment to Owner for payment. Such recommendation will account for any set-offs against payment that are necessary in Engineer's opinion to protect Owner from loss for the reasons stated above with respect to progress payments. Otherwise, Engineer will return the Application for Payment to Contractor, indicating in writing the reasons for refusing to recommend final payment, in which case Contractor shall make the necessary corrections and resubmit the Application for Payment.

C. *Notice of Acceptability*: In support of its recommendation of payment of the final Application for Payment, Engineer will also give written notice to Owner and Contractor that the Work is acceptable, subject to stated limitations in the notice and to the provisions of Paragraph 15.07.

D. *Completion of Work*: The Work is complete (subject to surviving obligations) when it is ready for final payment as established by the Engineer's written recommendation of final payment and issuance of notice of the acceptability of the Work.

E. *Final Payment Becomes Due*: Upon receipt from Engineer of the final Application for Payment and accompanying documentation, Owner shall set off against the amount recommended by Engineer for final payment any further sum to which Owner is entitled, including but not limited to set-offs for liquidated damages and set-offs allowed under the provisions of this Contract with respect to progress payments. Owner shall pay the resulting balance due to Contractor within Twenty-five (25) days of the final Application for Payment being stamped as received by Engineer.

15.07 *Waiver of Claims*

A. By making final payment, Owner waives its claim or right to liquidated damages or other damages for late completion by Contractor, except as set forth in an outstanding Claim, appeal under the provisions of Article 17, set-off, or express reservation of rights by Owner. Owner reserves all other claims or rights after final payment.

B. The acceptance of final payment by Contractor will constitute a waiver by Contractor of all claims and rights against Owner other than those pending matters that have been duly submitted as a Claim, or appealed under the provisions of Article 17.

Copyright© 2018 National Society of Professional Engineers, American Council of Engineering Companies, and American Society of Civil Engineers. All rights reserved.

15.08 *Correction Period*

A. If within one year after the date of Substantial Completion (or such longer period of time as may be prescribed by the Supplementary Conditions or the terms of any applicable special guarantee required by the Contract Documents), Owner gives Contractor written notice that any Work has been found to be defective, or that Contractor's repair of any damages to the Site or adjacent areas has been found to be defective, then after receipt of such notice of defect Contractor shall promptly, without cost to Owner and in accordance with Owner's written instructions:

1. correct the defective repairs to the Site or such adjacent areas;

2. correct such defective Work;

3. remove the defective Work from the Project and replace it with Work that is not defective, if the defective Work has been rejected by Owner, and

4. satisfactorily correct or repair or remove and replace any damage to other Work, to the work of others, or to other land or areas resulting from the corrective measures.

B. Owner shall give any such notice of defect within 60 days of the discovery that such Work or repairs is defective. If such notice is given within such 60 days but after the end of the correction period, the notice will be deemed a notice of defective Work under Paragraph 7.17.B.

C. If, after receipt of a notice of defect within 60 days and within the correction period, Contractor does not promptly comply with the terms of Owner's written instructions, or in an emergency where delay would cause serious risk of loss or damage, Owner may have the defective Work corrected or repaired or may have the rejected Work removed and replaced. Contractor shall pay all costs, losses, and damages (including but not limited to all fees and charges of engineers, architects, attorneys, and other professionals and all court or arbitration or other dispute resolution costs) arising out of or relating to such correction or repair or such removal and replacement (including but not limited to all costs of repair or replacement of work of others). Contractor's failure to pay such costs, losses, and damages within 10 days of invoice from Owner will be deemed the start of an event giving rise to a Claim under Paragraph 12.01.B, such that any related Claim must be brought within 30 days of the failure to pay.

D. In special circumstances where a particular item of equipment is placed in continuous service before Substantial Completion of all the Work, the correction period for that item may start to run from an earlier date if so provided in the Specifications.

E. Where defective Work (and damage to other Work resulting therefrom) has been corrected or removed and replaced under this paragraph, the correction period hereunder with respect to such Work will be extended for an additional period of one year after such correction or removal and replacement has been satisfactorily completed.

F. Contractor's obligations under this paragraph are in addition to all other obligations and warranties. The provisions of this paragraph are not to be construed as a substitute for, or a waiver of, the provisions of any applicable statute of limitation or repose.

Copyright© 2018 National Society of Professional Engineers, American Council of Engineering Companies, and American Society of Civil Engineers. All rights reserved.

ARTICLE 16—SUSPENSION OF WORK AND TERMINATION

16.01 *Owner May Suspend Work*

A. At any time and without cause, Owner may suspend the Work or any portion thereof for a period of not more than 90 consecutive days by written notice to Contractor and Engineer. Such notice will fix the date on which Work will be resumed. Contractor shall resume the Work on the date so fixed. Contractor shall be entitled to an adjustment in the Contract Price or an extension of the Contract Times directly attributable to any such suspension. Any Change Proposal seeking such adjustments must be submitted no later than 30 days after the date fixed for resumption of Work.

16.02 *Owner May Terminate for Cause*

A. The occurrence of any one or more of the following events will constitute a default by Contractor and justify termination for cause:

1. Contractor's persistent failure to perform the Work in accordance with the Contract Documents (including, but not limited to, failure to supply sufficient skilled workers or suitable materials or equipment, or failure to adhere to the Progress Schedule);

2. Failure of Contractor to perform or otherwise to comply with a material term of the Contract Documents;

3. Contractor's disregard of Laws or Regulations of any public body having jurisdiction;

4. Contractor's repeated disregard of the authority of Owner or Engineer:

5. Contractor's failure to timely pay Subcontractors and Suppliers after it receives payment from Owner, or

6. Contractor's failure to obtain or maintain the insurance required of it in the Contract.

B. If one or more of the events identified in Paragraph 16.02.A occurs, then after giving Contractor (and any surety) 5 days' written notice that Owner is considering a declaration that Contractor is in default and termination of the Contract, Owner may proceed to:

1. declare Contractor to be in default, and give Contractor (and any surety) written notice that the Contract is terminated; and

2. enforce the rights available to Owner under any applicable performance bond.

C. Subject to the terms and operation of any applicable performance bond, if Owner has terminated the Contract for cause, Owner may exclude Contractor from the Site, take possession of the Work, incorporate in the Work all materials and equipment stored at the Site or for which Owner has paid Contractor but which are stored elsewhere, and complete the Work as Owner may deem expedient.

D. Owner may not proceed with termination of the Contract under Paragraph 16.02.B if Contractor within 5 days of receipt of notice of intent to terminate begins to correct its failure to perform and proceeds diligently to cure such failure.

E. If Owner proceeds as provided in Paragraph 16.02.B, Contractor shall not be entitled to receive any further payment until the Work is completed. If the unpaid balance of the

Copyright© 2018 National Society of Professional Engineers, American Council of Engineering Companies, and American Society of Civil Engineers. All rights reserved.

Contract Price exceeds the cost to complete the Work, including all related claims, costs, losses, and damages (including but not limited to all fees and charges of engineers, architects, attorneys, and other professionals) sustained by Owner, such excess will be paid to Contractor. If the cost to complete the Work including such related claims, costs, losses, and damages exceeds such unpaid balance, Contractor shall pay the difference to Owner. When exercising any rights or remedies under this paragraph, Owner shall not be required to obtain the lowest price for the Work performed.

F. Where Contractor's services have been so terminated by Owner, the termination will not affect any rights or remedies of Owner against Contractor then existing or which may thereafter accrue, or any rights or remedies of Owner against Contractor or any surety under any payment bond or performance bond. Any retention or payment of money due Contractor by Owner will not release Contractor from liability.

G. If and to the extent that Contractor has provided a performance bond under the provisions of Paragraph 6.01.A, the provisions of that bond will govern over any inconsistent provisions of Paragraphs 16.02.B and 16.02.D.

16.03 *Owner May Terminate for Convenience*

A. Upon 5 days' written notice to Contractor and Engineer, Owner may, without cause and without prejudice to any other right or remedy of Owner, terminate the Contract. In such case, Contractor shall be paid for (without duplication of any items):

1. completed and acceptable Work executed in accordance with the Contract Documents prior to the effective date of termination, including fair and reasonable sums for overhead and profit on such Work;

2. expenses sustained prior to the effective date of termination in performing services and furnishing labor, materials, or equipment as required by the Contract Documents in connection with uncompleted Work, plus fair and reasonable sums for overhead and profit on such expenses; and

3. other reasonable expenses directly attributable to termination, such as demobilization expenses, and including costs incurred to prepare a termination for convenience cost proposal. Attorneys' fees, accountant fees, home office overhead and similar expenses shall not be deemed reasonable expenses.

B. Contractor shall not be paid for any loss of anticipated profits or revenue, post-termination overhead costs, or other economic loss arising out of or resulting from such termination.

16.04 *Contractor May Stop Work or Terminate*

A. If, through no act or fault of Contractor, (1) the Work is suspended for more than 90 consecutive days by Owner or under an order of court or other public authority, or (2) Engineer fails to act on any Application for Payment within 30 days after it is submitted, or (3) Owner fails for 30 days to pay Contractor any sum finally determined to be due, then Contractor may, upon 7 days' written notice to Owner and Engineer, and provided Owner or Engineer do not remedy such suspension or failure within that time, terminate the contract and recover from Owner payment on the same terms as provided in Paragraph 16.03.

Copyright© 2018 National Society of Professional Engineers, American Council of Engineering Companies, and American Society of Civil Engineers. All rights reserved.

Contractor, however, cannot terminate the Contract due to any dispute (i) concerning the amount of payment due Contractor or (ii) any amounts Owner is withholding from Contractor.

B. In lieu of terminating the Contract and without prejudice to any other right or remedy, if Engineer has failed to act on an Application for Payment within 30 days after it is submitted, or Owner has failed for 30 days to pay Contractor any sum finally determined to be due, Contractor may, 7 days after written notice to Owner and Engineer, stop the Work until payment is made of all such amounts due Contractor, including interest thereon. The provisions of this paragraph are not intended to preclude Contractor from submitting a Change Proposal for an adjustment in Contract Price or Contract Times or otherwise for expenses or damage directly attributable to Contractor's stopping the Work as permitted by this paragraph. Contractor, however, cannot stop the Work due to any dispute (i) concerning the amount of payment due Contractor or (ii) any amounts Owner is withholding from Contractor.

ARTICLE 17—FINAL RESOLUTION OF DISPUTES

17.01 *Deleted in its entirety.A. Deleted in its entirety.1. Deleted in its entirety.2. Deleted in its entirety.B. Deleted in its entirety.1. Deleted in its entirety.2. Deleted in its entirety.3. Deleted in its entirety.*

1. *Claims, disputes or other matters in question between the parties to this Agreement shall be first subject to pre-suit mediation prior to the filing of any legal claims or litigation. Completion of pre-suit mediation is a condition precedent to litigation. The obligation to mediate is a material and essential provision of the Agreement.*
2. *Unless otherwise agreed in writing, the Contractor shall carry on the Work and maintain its progress during any mediation or litigation, and the Owner shall continue to make payments to the Contractor in accordance with the Contract Documents.*
3. *Either party may initiate a mediation preceding by a request in writing to the other party within a reasonable time after the claim, dispute or other matter in question has arisen or as provided in subparagraph ___, but in no event after the expiration of the applicable statute of limitations.*
4. *The parties shall endeavor in good faith to mutually agree upon an acceptable mediator. In the event the parties have not agreed upon a mediator within thirty (30) days of the request for mediation, the Orlando office of the American Arbitration Association, upon the written request of either party, shall appoint a mediator from its pool of approved mediators.*
5. *Unless otherwise mutually agreed, the mediation shall be held in accordance with the Construction Industry Mediation Rules of the American Arbitration Association currently in effect, each party to bear its own fees, costs and expenses.*
6. *In the event that pre-suit mediation is unsuccessful, all claims, disputes or other matters in question shall be resolved in the Circuit Courts of Volusia County Florida. The Parties, including the*

Copyright© 2018 National Society of Professional Engineers, American Council of Engineering Companies, and American Society of Civil Engineers. All rights reserved.

Contractor's Surety, waive Venue and Jurisdiction of any Federal Court and expressly waive Trial by Jury.

ARTICLE 18—MISCELLANEOUS

18.01 *Giving Notice*

A. Whenever any provision of the Contract requires the giving of written notice to Owner, Engineer, or Contractor, it will be deemed to have been validly given only if delivered:

1. in person, by a commercial courier service or otherwise, to the recipient's place of business;

2. by registered or certified mail, postage prepaid, to the recipient's place of business; or

3. by e-mail to the recipient, with the words "Formal Notice" or similar in the e-mail's subject line.

18.02 *Computation of Times*

A. When any period of time is referred to in the Contract by days, it will be computed to exclude the first and include the last day of such period. If the last day of any such period falls on a Saturday or Sunday or on a day made a legal holiday by the law of the applicable jurisdiction, such day will be omitted from the computation.

18.03 *Cumulative Remedies*

A. The duties and obligations imposed by these General Conditions and the rights and remedies available hereunder to the parties hereto are in addition to, and are not to be construed in any way as a limitation of, any rights and remedies available to any or all of them which are otherwise imposed or available by Laws or Regulations, by special warranty or guarantee, or by other provisions of the Contract. The provisions of this paragraph will be as effective as if repeated specifically in the Contract Documents in connection with each particular duty, obligation, right, and remedy to which they apply.

18.04 *Limitation of Damages*

A. With respect to any and all Change Proposals, Claims, disputes subject to final resolution, and other matters at issue, neither Owner nor Engineer, nor any of their officers, directors, members, partners, employees, agents, consultants, or subcontractors, shall be liable to Contractor for any claims, costs, losses, or damages sustained by Contractor on or in connection with any other project or anticipated project.

18.05 *No Waiver*

A. A party's non-enforcement of any provision will not constitute a waiver of that provision, nor will it affect the enforceability of that provision or of the remainder of this Contract.

18.06 *Survival of Obligations*

A. All representations, indemnifications, warranties, and guarantees made in, required by, or given in accordance with the Contract, as well as all continuing obligations indicated in the

Copyright© 2018 National Society of Professional Engineers, American Council of Engineering Companies, and American Society of Civil Engineers. All rights reserved.

Contract, will survive final payment, completion, and acceptance of the Work or termination of the Contract or of the services of Contractor.

18.07 *Controlling Law*

A. This Contract is to be governed by the law of the State of Florida.

18.08 *Assignment of Contract*

A. Unless expressly agreed to elsewhere in the Contract, no assignment by a party to this Contract of any rights under or interests in the Contract will be binding on the other party without the written consent of the party sought to be bound; and, specifically but without limitation, money that may become due and money that is due may not be assigned without such consent (except to the extent that the effect of this restriction may be limited by law), and unless specifically stated to the contrary in any written consent to an assignment, no assignment will release or discharge the assignor from any duty or responsibility under the Contract.

18.09 *Successors and Assigns*

A. Owner and Contractor each binds itself, its successors, assigns, and legal representatives to the other party hereto, its successors, assigns, and legal representatives in respect to all covenants, agreements, and obligations contained in the Contract Documents.

18.10 *Headings*

A. Article and paragraph headings are inserted for convenience only and do not constitute parts of these General Conditions.

Copyright© 2018 National Society of Professional Engineers, American Council of Engineering Companies, and American Society of Civil Engineers. All rights reserved.

EJCDC General Conditions
Additions and Deletions Version

Consisting of 87 pages

This document has important legal consequences; consultation with an attorney is encouraged with respect to its use or modification. This document should be adapted to the particular circumstances of the contemplated Project and the controlling Laws and Regulations.

STANDARD GENERAL CONDITIONS OF THE CONSTRUCTION CONTRACT

Prepared By

EJCDC®
ENGINEERS JOINT CONTRACT DOCUMENTS COMMITTEE

ACEC
AMERICAN COUNCIL OF ENGINEERING COMPANIES

ASCE
AMERICAN SOCIETY OF CIVIL ENGINEERS

NSPE®
NATIONAL SOCIETY OF PROFESSIONAL ENGINEERS

Endorsed By

CSI®
Building Knowledge
Improving Project Delivery

NUCA
We Dig America

EJCDC® C-700, Standard General Conditions of the Construction Contract.
Copyright© 2018 National Society of Professional Engineers, American Council of Engineering Companies, and American Society of Civil Engineers. All rights reserved.

4885-5313-8281, v. 424

Copyright© 2018

National Society of Professional Engineers

1420 King Street, Alexandria, VA 22314-2794

(703) 684-2882

www.nspe.org

American Council of Engineering Companies

1015 15th Street N.W., Washington, DC 20005

(202) 347-7474

www.acec.org

American Society of Civil Engineers

1801 Alexander Bell Drive, Reston, VA 20191-4400

(800) 548-2723

www.asce.org

The copyright for this EJCDC document is owned jointly by the three sponsoring organizations listed above. The National Society of Professional Engineers is the Copyright Administrator for the EJCDC documents; please direct all inquiries regarding EJCDC copyrights to NSPE.

NOTE: EJCDC publications may be purchased at www.ejcdc.org, or from any of the sponsoring organizations above.

GUIDELINES FOR USE OF EJCDC® C-700, STANDARD GENERAL CONDITIONS OF THE CONSTRUCTION CONTRACT

1.0 PURPOSE AND INTENDED USE OF THE DOCUMENT

EJCDC® C-700, Standard General Conditions of the Construction Contract (2018), is the foundation document for the EJCDC Construction Series. The General Conditions define the basic rights, responsibilities, risk allocations, and contractual relationship of the Owner and Contractor, and establish how the Contract is to be administered.

2.0 OTHER DOCUMENTS

EJCDC documents are intended to be used as a system and changes in one EJCDC document may require a corresponding change in other documents. Other EJCDC documents may also serve as a reference to provide insight or guidance for the preparation of this document.

These General Conditions have been prepared for use with either EJCDC® C-520, Agreement Between Owner and Contractor for Construction Contract (Stipulated Price), or EJCDC® C-525, Agreement Between Owner and Contractor for Construction Contract (Cost-Plus-Fee) (2018 Editions). The provisions of the General Conditions and the Agreement are interrelated, and a change in one may necessitate a change in the other.

To prepare supplementary conditions that are coordinated with the General Conditions, use EJCDC® C-800, Supplementary Conditions of the Construction Contract (2018).

The full EJCDC Construction series of documents is discussed in the EJCDC® C-001, Commentary on the 2018 EJCDC Construction Documents (2018).

3.0 ORGANIZATION OF INFORMATION

All parties involved in a construction project benefit significantly from a standardized approach in the location of subject matter throughout the documents. Experience confirms the danger of addressing the same subject matter in more than one location; doing so frequently leads to confusion and unanticipated legal consequences. Careful attention should be given to the guidance provided in EJCDC® N-122/AIA® A521, Uniform Location of Subject Matter (2012 Edition) when preparing documents. EJCDC® N-122/AIA® A521 is available at no charge from the EJCDC website, www.ejcdc.org, and from the websites of EJCDC's sponsoring organizations.

If CSI MasterFormat™ is used for organizing the Project Manual, consult CSI MasterFormat™ for the appropriate document number (e.g., under 00 11 00, Advertisements and Invitations), and accordingly number the document and its pages.

4.0 EDITING THIS DOCUMENT

Remove these Guidelines for Use. Some users may also prefer to remove the two cover pages.

Although it is permissible to revise the Standard EJCDC Text of C-700 (the content beginning at page 1 and continuing to the end), it is common practice to leave the Standard EJCDC Text of C-700 intact and unaltered, with modifications and supplementation of C-700's provisions set forth in EJCDC® C-800, Supplementary Conditions of the Construction Contract (2018). If the Standard Text itself is revised, the

Copyright© 2018 National Society of Professional Engineers, American Council of Engineering Companies, and American Society of Civil Engineers. All rights reserved.

user must comply with the terms of the License Agreement, Paragraph 4.0, Document-Specific Provisions, concerning the tracking or highlighting of revisions. The following is a summary of the relevant License Agreement provisions:

1. The term "Standard EJCDC Text" for C-700 refers to all text prepared by EJCDC in the main body of the document. Document covers, logos, footers, instructions, or copyright notices are not Standard EJCDC Text for this purpose.

2. During the drafting or negotiating process for C-700, it is important that the two contracting parties are both aware of any changes that have been made to the Standard EJCDC Text. Thus, if a draft or version of C-700 purports to be or appears to be an EJCDC document, the user must plainly show all changes to the Standard EJCDC Text, using "Track Changes" (redline/strikeout), highlighting, or other means of clearly indicating additions and deletions.

3. If C-700 has been revised or altered and is subsequently presented to third parties (such as potential bidders, grant agencies, lenders, or sureties) as an EJCDC document, then the changes to the Standard EJCDC Text must be shown, or the third parties must receive access to a version that shows the changes.

4. Once the document is ready to be finalized (and if applicable executed by the contracting parties), it is no longer necessary to continue to show changes to the Standard EJCDC Text. The user may produce a final version of the document in a format in which all changes are accepted, and the document at that point does not need to include any "Track Changes," redline/strikeout, highlighting, or other indication of additions and deletions to the Standard EJCDC Text.

5.0 LICENSE AGREEMENT

This document is subject to the terms and conditions of the **License Agreement, 2018 EJCDC® Construction Series Documents**. A copy of the License Agreement was furnished at the time of purchase of this document, and is available for review at www.ejcdc.org and the websites of EJCDC's sponsoring organizations.

Copyright© 2018 National Society of Professional Engineers, American Council of Engineering Companies, and American Society of Civil Engineers. All rights reserved.

STANDARD GENERAL CONDITIONS OF THE CONSTRUCTION CONTRACT

TABLE OF CONTENTS

Page

Article 1—Definitions and Terminology 1

1.01 Defined Terms 1

1.02 Terminology 6

Article 2—Preliminary Matters 7

2.01 Delivery of Performance and Payment Bonds; Evidence of Insurance 7

2.02 Copies of Documents ..... 8~~7~~

2.03 Before Starting Construction ..... 8~~7~~

2.04 Preconstruction Conference; Designation of Authorized Representatives 8

2.05 Acceptance of Schedules ..... 9~~8~~

2.06 Electronic Transmittals ..... 9~~8~~

Article 3—Contract Documents: Intent, Requirements, Reuse ..... 10~~9~~

3.01 Intent ..... 10~~9~~

3.02 Reference Standards ..... 10~~9~~

3.03 Reporting and Resolving Discrepancies ..... 11~~10~~

3.04 Requirements of the Contract Documents ..... 12~~10~~

3.05 Reuse of Documents ..... 12~~11~~

Article 4—Commencement and Progress of the Work ..... 12~~11~~

4.01 Commencement of Contract Times; Notice to Proceed ..... 12~~11~~

4.02 Starting the Work ..... 13~~11~~

4.03 Reference Points ..... 13~~11~~

4.04 Progress Schedule ..... 13~~12~~

4.05 Delays in Contractor's Progress ..... 13~~12~~

Article 5—Site; Subsurface and Physical Conditions; Hazardous Environmental Conditions ..... 15~~13~~

5.01 Availability of Lands ..... 15~~13~~

5.02 Use of Site and Other Areas ..... 15~~14~~

5.03 Subsurface and Physical Conditions ..... 17~~15~~

5.04 Differing Subsurface or Physical Conditions ..... 17~~16~~

Copyright© 2018 National Society of Professional Engineers, American Council of Engineering Companies, and American Society of Civil Engineers. All rights reserved.

5.05 Underground Facilities ..... 19~~17~~
5.06 Hazardous Environmental Conditions at Site ..... 21~~19~~
Article 6—Bonds and Insurance ..... 24~~21~~
6.01 Performance, Payment, and Other Bonds ..... 24~~21~~
6.02 Insurance—General Provisions ..... 25~~22~~
6.03 Contractor's Insurance ..... 27~~24~~
6.04 Builder's Risk and Other Property Insurance ..... 28~~25~~
6.05 Property Losses; Subrogation ..... 28~~25~~
6.06 Receipt and Application of Property Insurance Proceeds ..... 30~~27~~
Article 7—Contractor's Responsibilities ..... 30~~27~~
7.01 Contractor's Means and Methods of Construction ..... 30~~27~~
7.02 Supervision and Superintendence ..... 31~~27~~
7.03 Labor; Working Hours ..... 31~~27~~
7.04 Services, Materials, and Equipment ..... 31~~28~~
7.05 "Or Equals" ..... 32~~28~~
7.06 Substitutes ..... 33~~29~~
7.07 Concerning Subcontractors and Suppliers ..... 35~~31~~
7.08 Patent Fees and Royalties ..... 36~~32~~
7.09 Permits ..... 36~~33~~
7.10 Taxes ..... 37~~33~~
7.11 Laws and Regulations ..... 37~~33~~
7.12 Record Documents ..... 37~~33~~
7.13 Safety and Protection ..... 37~~34~~
7.14 Hazard Communication Programs ..... 39~~35~~
7.15 Emergencies ..... 39~~35~~
7.16 Submittals ..... 39~~35~~
7.17 Contractor's General Warranty and Guarantee ..... 42~~38~~
7.18 Indemnification ..... 43~~39~~
7.19 Delegation of Professional Design Services ..... 44~~39~~
Article 8—Other Work at the Site ..... 45~~40~~
8.01 Other Work ..... 45~~40~~
8.02 Coordination ..... 46~~41~~
8.03 Legal Relationships ..... 46~~41~~

Copyright© 2018 National Society of Professional Engineers, American Council of Engineering Companies, and American Society of Civil Engineers. All rights reserved.

Article 9—Owner's Responsibilities 4742
9.01 Communications to Contractor 4742
9.02 Replacement of Engineer 4742
9.03 Furnish Data 4742
9.04 Pay When Due 4742
9.05 Lands and Easements; Reports, Tests, and Drawings 4743
9.06 Insurance 4843
9.07 Change Orders 4843
9.08 Inspections, Tests, and Approvals 4843
9.09 Limitations on Owner's Responsibilities 4843
9.10 Undisclosed Hazardous Environmental Condition 4843
9.11 Evidence of Financial Arrangements 4843
9.12 Safety Programs 4843
Article 10—Engineer's Status During Construction 4844
10.01 Owner's Representative 4844
10.02 Visits to Site 4944
10.03 Resident Project Representative 4944
10.04 Engineer's Authority 4944
10.05 Determinations for Unit Price Work 4945
10.06 Decisions on Requirements of Contract Documents and Acceptability of Work 5045
10.07 Limitations on Engineer's Authority and Responsibilities 5045
10.08 Compliance with Safety Program 5045
Article 11—Changes to the Contract 5046
11.01 Amending and Supplementing the Contract 5046
11.02 Change Orders 5146
11.03 Work Change Directives 5146
11.04 Field Orders 5247
11.05 Owner-Authorized Changes in the Work 5247
11.06 Unauthorized Changes in the Work 5247
11.07 Change of Contract Price 5247
11.08 Change of Contract Times 5449
11.09 Change Proposals 5449
11.10 Notification to Surety 5550

Copyright© 2018 National Society of Professional Engineers, American Council of Engineering Companies, and American Society of Civil Engineers. All rights reserved.

Article 12—Claims 5550
12.01 Claims 5550
Article 13—Cost of the Work; Allowances; Unit Price Work 5751
13.01 Cost of the Work 5751
13.02 Allowances 6055
13.03 Unit Price Work 6155
Article 14—Tests and Inspections; Correction, Removal, or Acceptance of Defective Work 6256
14.01 Access to Work 6256
14.02 Tests, Inspections, and Approvals 6256
14.03 Defective Work 6357
14.04 Acceptance of Defective Work 6358
14.05 Uncovering Work 6458
14.06 Owner May Stop the Work 6458
14.07 Owner May Correct Defective Work 6559
Article 15—Payments to Contractor; Set-Offs; Completion; Correction Period 6559
15.01 Progress Payments 6559
15.02 Contractor's Warranty of Title 6962
15.03 Substantial Completion 6962
15.04 Partial Use or Occupancy 7063
15.05 Final Inspection 7164
15.06 Final Payment 7164
15.07 Waiver of Claims 7265
15.08 Correction Period 7366
Article 16—Suspension of Work and Termination 7467
16.01 Owner May Suspend Work 7467
16.02 Owner May Terminate for Cause 7467
16.03 Owner May Terminate for Convenience 7568
16.04 Contractor May Stop Work or Terminate 7568
Article 17—Final Resolution of Disputes 7669
17.01 Methods and Procedures 7669
Article 18—Miscellaneous 7769
18.01 Giving Notice 7769
18.02 Computation of Times 7769

Copyright© 2018 National Society of Professional Engineers, American Council of Engineering Companies, and American Society of Civil Engineers. All rights reserved.

18.03 Cumulative Remedies 7770
18.04 Limitation of Damages 7870
18.05 No Waiver 7870
18.06 Survival of Obligations 7870
18.07 Controlling Law 7870
18.08 Assignment of Contract 7870
18.09 Successors and Assigns 7870
18.10 Headings 7870

Copyright© 2018 National Society of Professional Engineers, American Council of Engineering Companies, and American Society of Civil Engineers. All rights reserved.

STANDARD GENERAL CONDITIONS OF THE CONSTRUCTION CONTRACT

ARTICLE 1—DEFINITIONS AND TERMINOLOGY

1.01 *Defined Terms*

A. Wherever used in the Bidding Requirements or Contract Documents, a term printed with initial capital letters, including the term's singular and plural forms, will have the meaning indicated in the definitions below. In addition to terms specifically defined, terms with initial capital letters in the Contract Documents include references to identified articles and paragraphs, and the titles of other documents or forms.

1. *Addenda*—Written or graphic instruments issued prior to the opening of Bids which clarify, correct, or change the Bidding Requirements or the proposed Contract Documents.

2. *Agreement*—The written instrument, executed by Owner and Contractor, that sets forth the Contract Price and Contract Times, identifies the parties and the Engineer, and designates the specific items that are Contract Documents.

3. *Application for Payment*—The document prepared by Contractor, in a form acceptable to Engineer, to request progress or final payments, and which is to be accompanied by such supporting documentation as is required by the Contract Documents.

4. *Bid*—The offer of a Bidder submitted on the prescribed form setting forth the prices for the Work to be performed.

5. *Bidder*—An individual or entity that submits a Bid to Owner.

6. *Bidding Documents*—The Bidding Requirements, the proposed Contract Documents, and all Addenda.

7. *Bidding Requirements*—The Advertisement or invitation to bid, Instructions to Bidders, Bid Bond or other Bid security, if any, the Bid Form, and the Bid with any attachments.

8. *Change Order*—A document which is signed by Contractor and Owner and authorizes an addition, deletion, or revision in the Work or an adjustment in the Contract Price or the Contract Times, or other revision to the Contract, issued on or after the Effective Date of the Contract.

9. *Change Proposal*—A written request by Contractor, duly submitted in compliance with the procedural requirements set forth herein, seeking an adjustment in Contract Price or Contract Times; contesting an initial decision by Engineer concerning the requirements of the Contract Documents or the acceptability of Work under the Contract Documents; challenging a set-off against payments due; or seeking other relief with respect to the terms of the Contract.

Copyright© 2018 National Society of Professional Engineers, American Council of Engineering Companies, and American Society of Civil Engineers. All rights reserved.

10. *Claim*

    a. A demand or assertion by Owner directly to Contractor, duly submitted in compliance with the procedural requirements set forth herein, seeking an adjustment of Contract Price or Contract Times; contesting an initial decision by Engineer concerning the requirements of the Contract Documents or the acceptability of Work under the Contract Documents; contesting Engineer's decision regarding a Change Proposal; seeking resolution of a contractual issue that Engineer has declined to address; or seeking other relief with respect to the terms of the Contract.

    b. A demand or assertion by Contractor directly to Owner, duly submitted in compliance with the procedural requirements set forth herein, contesting Engineer's decision regarding a Change Proposal, or seeking resolution of a contractual issue that Engineer has declined to address.

    c. A demand or assertion by Owner or Contractor, duly submitted in compliance with the procedural requirements set forth herein, made pursuant to Paragraph 12.01.A.4, concerning disputes arising after Engineer has issued a recommendation of final payment.

    d. A demand for money or services by a third party is not a Claim.

11. *Constituent of Concern*—Asbestos, petroleum, radioactive materials, polychlorinated biphenyls (PCBs), lead-based paint (as defined by the HUD/EPA standard), hazardous waste, and any substance, product, waste, or other material of any nature whatsoever that is or becomes listed, regulated, or addressed pursuant to Laws and Regulations regulating, relating to, or imposing liability or standards of conduct concerning, any hazardous, toxic, or dangerous waste, substance, or material.

12. *Contract*—The entire and integrated written contract between Owner and Contractor concerning the Work.

13. *Contract Documents*—Those items so designated in the Agreement, and which together comprise the Contract.

14. *Contract Price*—The money that Owner has agreed to pay Contractor for completion of the Work in accordance with the Contract Documents.

15. *Contract Times*—The number of days or the dates by which Contractor shall: (a) achieve Milestones, if any; (b) achieve Substantial Completion; and (c) complete the Work.

16. *Contractor*—The individual or entity with which Owner has contracted for performance of the Work.

17. *Cost of the Work*—See Paragraph 13.01 for definition.

18. *Drawings*—The part of the Contract that graphically shows the scope, extent, and character of the Work to be performed by Contractor.

19. *Effective Date of the Contract*—The date, indicated in the Agreement, on which the Contract becomes effective.

Copyright© 2018 National Society of Professional Engineers, American Council of Engineering Companies, and American Society of Civil Engineers. All rights reserved.

20. *Electronic Document*—Any Project-related correspondence, attachments to correspondence, data, documents, drawings, information, or graphics, including but not limited to Shop Drawings and other Submittals, that are in an electronic or digital format.

21. *Electronic Means*—Electronic mail (email), upload/download from a secure Project website, or other communications methods that allow: (a) the transmission or communication of Electronic Documents; (b) the documentation of transmissions, including sending and receipt; (c) printing of the transmitted Electronic Document by the recipient; (d) the storage and archiving of the Electronic Document by sender and recipient; and (e) the use by recipient of the Electronic Document for purposes permitted by this Contract. Electronic Means does not include the use of text messaging, or of Facebook, Twitter, Instagram, or similar social media services for transmission of Electronic Documents.

22. *Engineer*—The individual or entity named as such in the Agreement.

23. *Field Order*—A written order issued by Engineer which requires minor changes in the Work but does not change the Contract Price or the Contract Times.

24. *Hazardous Environmental Condition*—The presence at the Site of Constituents of Concern in such quantities or circumstances that may present a danger to persons or property exposed thereto.

    a. The presence at the Site of materials that are necessary for the execution of the Work, or that are to be incorporated into the Work, and that are controlled and contained pursuant to industry practices, Laws and Regulations, and the requirements of the Contract, is not a Hazardous Environmental Condition.

    b. The presence of Constituents of Concern that are to be removed or remediated as part of the Work is not a Hazardous Environmental Condition.

    c. The presence of Constituents of Concern as part of the routine, anticipated, and obvious working conditions at the Site, is not a Hazardous Environmental Condition.

25. *Laws and Regulations; Laws or Regulations*—Any and all applicable laws, statutes, rules, regulations, ordinances, codes, and binding decrees, resolutions, and orders of any and all governmental bodies, agencies, authorities, and courts having jurisdiction.

26. *Liens*—Charges, security interests, or encumbrances upon Contract-related funds, real property, or personal property.

27. *Milestone*—A principal event in the performance of the Work that the Contract requires Contractor to achieve by an intermediate completion date, or by a time prior to Substantial Completion of all the Work.

28. *Notice of Award*—The written notice by Owner to a Bidder of Owner's acceptance of the Bid.

29. *Notice to Proceed*—A written notice by Owner to Contractor fixing the date on which the Contract Times will commence to run and on which Contractor shall start to perform the Work.

Copyright© 2018 National Society of Professional Engineers, American Council of Engineering Companies, and American Society of Civil Engineers. All rights reserved.

30. *Owner*—The individual or entity with which Contractor has contracted regarding the Work, and which has agreed to pay Contractor for the performance of the Work, pursuant to the terms of the Contract.

31. *Progress Schedule*—A schedule, prepared and maintained by Contractor, describing the sequence and duration of the activities comprising Contractor's plan to accomplish the Work within the Contract Times.

32. *Project*—The total undertaking to be accomplished for Owner by engineers, contractors, and others, including planning, study, design, construction, testing, commissioning, and start-up, and of which the Work to be performed under the Contract Documents is a part.

33. *Project Manual*—The bound documentary information prepared for bidding and constructing the Work. A listing of the contents of the Project Manual, which may be bound in one or more volumes, is contained in the table(s) of contents.

34. *Punch List* - the detailed list of incomplete, unsatisfactory or unacceptable, or defective items that Contractor is required to complete prior to final payment that is generated in accordance with Paragraph 14.06 of the General Conditions."

343. *Resident Project Representative*—The authorized representative of Engineer assigned to assist Engineer at the Site. As used herein, the term Resident Project Representative (RPR) includes any assistants or field staff of Resident Project Representative.

34. *Samples*—Physical examples of materials, equipment, or workmanship that are representative of some portion of the Work and that establish the standards by which such portion of the Work will be judged.

35. *Schedule of Submittals*—A schedule, prepared and maintained by Contractor, of required submittals and the time requirements for Engineer's review of the submittals.

36. *Schedule of Values*—A schedule, prepared and maintained by Contractor, allocating portions of the Contract Price to various portions of the Work and used as the basis for reviewing Contractor's Applications for Payment.

37. *Shop Drawings*—All drawings, diagrams, illustrations, schedules, and other data or information that are specifically prepared or assembled by or for Contractor and submitted by Contractor to illustrate some portion of the Work. Shop Drawings, whether approved or not, are not Drawings and are not Contract Documents.

38. *Site*—Lands or areas indicated in the Contract Documents as being furnished by Owner upon which the Work is to be performed, including rights-of-way and easements, and such other lands or areas furnished by Owner which are designated for the use of Contractor.

39. *Specifications*—The part of the Contract that consists of written requirements for materials, equipment, systems, standards, and workmanship as applied to the Work, and certain administrative requirements and procedural matters applicable to the Work.

40. *Subcontractor*—An individual or entity having a direct contract with Contractor or with any other Subcontractor for the performance of a part of the Work.

Copyright© 2018 National Society of Professional Engineers, American Council of Engineering Companies, and American Society of Civil Engineers. All rights reserved.

41. *Submittal*—A written or graphic document, prepared by or for Contractor, which the Contract Documents require Contractor to submit to Engineer, or that is indicated as a Submittal in the Schedule of Submittals accepted by Engineer. Submittals may include Shop Drawings and Samples; schedules; product data; Owner-delegated designs; sustainable design information; information on special procedures; testing plans; results of tests and evaluations, source quality-control testing and inspections, and field or Site quality-control testing and inspections; warranties and certifications; Suppliers' instructions and reports; records of delivery of spare parts and tools; operations and maintenance data; Project photographic documentation; record documents; and other such documents required by the Contract Documents. Submittals, whether or not approved or accepted by Engineer, are not Contract Documents. Change Proposals, Change Orders, Claims, notices, Applications for Payment, and requests for interpretation or clarification are not Submittals.

42. *Substantial Completion*—The time and date at which the Work (or a specified part thereof) has progressed to the point where, in the opinion of Engineer, the Work (or a specified part thereof) is sufficiently complete, in accordance with the Contract Documents, so that the Work (or a specified part thereof) can be ~~occupied and/or~~ utilized for the purposes for which it is intended. The terms "substantially complete" and "substantially completed" as applied to all or part of the Work refer to Substantial Completion of such Work. ~~Substantial Completion cannot occur before the Project is issued a Certificate of Occupancy (or Completion, if applicable) by the governing building department that allows Owner to begin to utilize the entire Project for the purposes for which it was intended.~~

43. *Successful Bidder*—The Bidder to which the Owner makes an award of contract.

44. *Supplementary Conditions*—The part of the Contract that amends or supplements these General Conditions.

45. *Supplier*—A manufacturer, fabricator, supplier, distributor, or vendor having a direct contract with Contractor or with any Subcontractor to furnish materials or equipment to be incorporated in the Work by Contractor or a Subcontractor.

46. *Technical Data*

    a. Those items expressly identified as Technical Data in the Supplementary Conditions, with respect to either (1) existing subsurface conditions at or adjacent to the Site, or existing physical conditions at or adjacent to the Site including existing surface or subsurface structures (except Underground Facilities) or (2) Hazardous Environmental Conditions at the Site.

    b. If no such express identifications of Technical Data have been made with respect to conditions at the Site, then Technical Data is defined, with respect to conditions at the Site under Paragraphs 5.03, 5.04, and 5.06, as the data contained in boring logs, recorded measurements of subsurface water levels, assessments of the condition of subsurface facilities, laboratory test results, and other factual, objective information regarding conditions at the Site that are set forth in any geotechnical, environmental, or other Site or facilities conditions report prepared for the Project and made available to Contractor.

Copyright© 2018 National Society of Professional Engineers, American Council of Engineering Companies, and American Society of Civil Engineers. All rights reserved.

c. Information and data regarding the presence or location of Underground Facilities are not intended to be categorized, identified, or defined as Technical Data, and instead Underground Facilities are shown or indicated on the Drawings.

47. *Underground Facilities*—All active or not-in-service underground lines, pipelines, conduits, ducts, encasements, cables, wires, manholes, vaults, tanks, tunnels, or other such facilities or systems at the Site, including but not limited to those facilities or systems that produce, transmit, distribute, or convey telephone or other communications, cable television, fiber optic transmissions, power, electricity, light, heat, gases, oil, crude oil products, liquid petroleum products, water, steam, waste, wastewater, storm water, other liquids or chemicals, or traffic or other control systems. An abandoned facility or system is not an Underground Facility.

48. *Unit Price Work*—Work to be paid for on the basis of unit prices.

49. *Work*—The entire construction or the various separately identifiable parts thereof required to be provided under the Contract Documents. Work includes and is the result of performing or providing all labor, services, and documentation necessary to produce such construction; furnishing, installing, and incorporating all materials and equipment into such construction; and may include related services such as testing, start-up, and commissioning, all as required by the Contract Documents.

50. Emergency *Work Change Directive*—A written directive to Contractor issued on or after the Effective Date of the Contract, signed by Owner and recommended by Engineer, ordering an addition, deletion, or revision in the Work due to an emergency that prevents the parties from using the Change Order process.

1.02 *Terminology*

A. The words and terms discussed in Paragraphs 1.02.B, C, D, and E are not defined terms that require initial capital letters, but, when used in the Bidding Requirements or Contract Documents, have the indicated meaning.

B. *Intent of Certain Terms or Adjectives*: The Contract Documents include the terms "as allowed," "as approved," "as ordered," "as directed" or terms of like effect or import to authorize an exercise of professional judgment by Engineer. In addition, the adjectives "reasonable," "suitable," "acceptable," "proper," "satisfactory," or adjectives of like effect or import are used to describe an action or determination of Engineer as to the Work. It is intended that such exercise of professional judgment, action, or determination will be solely to evaluate, in general, the Work for compliance with the information in the Contract Documents and with the design concept of the Project as a functioning whole as shown or indicated in the Contract Documents (unless there is a specific statement indicating otherwise). The use of any such term or adjective is not intended to and shall not be effective to assign to Engineer any duty or authority to supervise or direct the performance of the Work, or any duty or authority to undertake responsibility contrary to the provisions of Article 10 or any other provision of the Contract Documents.

C. *Day*: The word "day" means a calendar day of 24 hours measured from midnight to the next midnight, including weekends and legal holidays unless otherwise specifically defined.

Copyright© 2018 National Society of Professional Engineers, American Council of Engineering Companies, and American Society of Civil Engineers. All rights reserved.

D. *Defective*: The word "defective," when modifying the word "Work," refers to Work that is unsatisfactory, faulty, or deficient in that it:

1. does not conform to the Contract Documents;

2. does not meet the requirements of any applicable inspection, reference standard, test, or approval referred to in the Contract Documents; or

3. has been damaged prior to Engineer's recommendation of final payment (unless responsibility for the protection thereof has been assumed by Owner at Substantial Completion in accordance with Paragraph 15.03 or Paragraph 15.04).

E. *Furnish, Install, Perform, Provide*

1. The word "furnish," when used in connection with services, materials, or equipment, means to supply and deliver said services, materials, or equipment to the Site (or some other specified location) ready for use or installation and in usable or operable condition.

2. The word "install," when used in connection with services, materials, or equipment, means to put into use or place in final position said services, materials, or equipment complete and ready for intended use.

3. The words "perform" or "provide," when used in connection with services, materials, or equipment, means to furnish and install said services, materials, or equipment complete and ready for intended use.

4. If the Contract Documents establish an obligation of Contractor with respect to specific services, materials, or equipment, but do not expressly use any of the four words "furnish," "install," "perform," or "provide," then Contractor shall furnish and install said services, materials, or equipment complete and ready for intended use.

F. *Contract Price or Contract Times*: References to a change in "Contract Price or Contract Times" or "Contract Times or Contract Price" or similar, indicate that such change applies to (1) Contract Price, (2) Contract Times, or (3) both Contract Price and Contract Times, as warranted, even if the term "or both" is not expressed.

G. Unless stated otherwise in the Contract Documents, words or phrases that have a well-known technical or construction industry or trade meaning are used in the Contract Documents in accordance with such recognized meaning.

ARTICLE 2—PRELIMINARY MATTERS

2.01 *Delivery of Performance and Payment Bonds; Evidence of Insurance*

A. *Performance and Payment Bonds*: When Contractor delivers the signed counterparts of the Agreement to Owner, Contractor shall also deliver to Owner the performance bond and payment bond (if the Contract requires Contractor to furnish such bonds).

B. *Evidence of Contractor's Insurance*: When Contractor delivers the signed counterparts of the Agreement to Owner, Contractor shall also deliver to Owner, with copies to each additional insured (as identified in the Contract), the certificates, endorsements, and other evidence of insurance required to be provided by Contractor in accordance with Article 6, except to the

Copyright© 2018 National Society of Professional Engineers, American Council of Engineering Companies, and American Society of Civil Engineers. All rights reserved.

extent the Supplementary Conditions expressly establish other dates for delivery of specific insurance policies.

C. Deleted in its entirety.~~*Evidence of Owner's Insurance*: After receipt of the signed counterparts of the Agreement and all required bonds and insurance documentation, Owner shall promptly deliver to Contractor, with copies to each additional insured (as identified in the Contract), the certificates and other evidence of insurance required to be provided by Owner under Article 6.~~

2.02 *Copies of Documents*

A. Owner shall furnish to Contractor four printed copies of the Contract (including one fully signed counterpart of the Agreement), and one copy in electronic portable document format (PDF). Additional printed copies will be furnished upon request at the cost of reproduction.

B. Owner shall maintain and safeguard at least one original printed record version of the Contract, including Drawings and Specifications signed and sealed by Engineer and other design professionals. Owner shall make such original printed record version of the Contract available to Contractor for review. Owner may delegate the responsibilities under this provision to Engineer.

2.03 *Before Starting Construction*

A. *Preliminary Schedules*: Within 10 days after the Effective Date of the Contract (or as otherwise required by the Contract Documents), Contractor shall submit to Engineer for timely review:

1. a preliminary Progress Schedule indicating the times (numbers of days or dates) for starting and completing the various stages of the Work, including any Milestones specified in the Contract, and identifying the Substantial Completion ~~and Final Completion~~ date~~s~~;

2. a preliminary Schedule of Submittals; and

3. a preliminary Schedule of Values for all of the Work which includes quantities and prices of items which when added together equal the Contract Price and subdivides the Work into component parts in sufficient detail to serve as the basis for progress payments during performance of the Work. Such prices will include an appropriate amount of overhead and profit applicable to each item of Work.

2.04 *Preconstruction Conference; Designation of Authorized Representatives*

A. Before any Work at the Site is started, a conference attended by Owner, Contractor, Engineer, and others as appropriate will be held to establish a working understanding among the parties as to the Work, and to discuss the schedules referred to in Paragraph 2.03.A, procedures for handling Shop Drawings, Samples, and other Submittals, processing Applications for Payment, electronic or digital transmittals, and maintaining required records.

B. At this conference Owner and Contractor each shall designate, in writing, a specific individual to act as its authorized representative with respect to the services and responsibilities under the Contract. Such individuals shall have the authority to transmit and receive information, render decisions relative to the Contract, and otherwise act on behalf of each respective party.

Copyright© 2018 National Society of Professional Engineers, American Council of Engineering Companies, and American Society of Civil Engineers. All rights reserved.

2.05 *Acceptance of Schedules*

A. At least 10 days before submission of the first Application for Payment a conference, attended by Contractor, Engineer, ~~or~~ Owner and others as appropriate, will be held to review the schedules submitted in accordance with Paragraph 2.03.A. No progress payment will be made to Contractor until acceptable schedules are submitted to and approved by Engineer and Owner.

1. The Progress Schedule will be acceptable to Engineer and Owner if it provides an orderly progression of the Work to completion within the Contract Times and identifies Contractor's critical path sequence of scheduled activities with the earliest start dates for scheduled activities, the earliest finish date for scheduled activities, the latest start date for scheduled activities and latest finish date for scheduled activities. All float in the Progress Schedule shall belong to Owner in order to offset a ~~dlay~~delay attributable to Owner or its agents. Such acceptance will not impose on Engineer or Owner responsibility for the Progress Schedule, for sequencing, scheduling, or progress of the Work, nor interfere with or relieve Contractor from Contractor's full responsibility therefor.

2. Contractor's Schedule of Submittals will be acceptable to Engineer and Owner if it provides a workable arrangement for reviewing and processing the required submittals.

3. Contractor's Schedule of Values will be acceptable to Engineer and Owner as to form and substance if it provides a reasonable allocation of the Contract Price to the component parts of the Work.

4. If a schedule is not acceptable, Contractor will have an additional 10 days to revise and resubmit the schedule.

5. If Contractor submits a schedule indicating an intention to achieve completion of the Wok prior to contractually required dates, including milestones, no liability of the Owner to the Contractor for any failure of the Contractor to complete early shall be created, whether or not the Owner approves such schedule.

6. The Contractor acknowledges ~~thtthat~~ the Owner may retain the services of a scheduling consultant at the Owner's expense. The Contractor shall cooperate with any such scheduling consultant at the Owner's direction, including without limitation, with regard to the preparation of the Project schedule.

2.06 *Electronic Transmittals*

A. Except as otherwise stated elsewhere in the Contract, the Owner, Engineer, and Contractor may send, and shall accept, Electronic Documents transmitted by Electronic Means.

B. If the Contract does not establish protocols for Electronic Means, then Owner, Engineer, and Contractor shall jointly develop such protocols.

C. Subject to any governing protocols for Electronic Means, when transmitting Electronic Documents by Electronic Means, the transmitting party makes no representations as to long-term compatibility, usability, or readability of the Electronic Documents resulting from the recipient's use of software application packages, operating systems, or computer hardware differing from those used in the drafting or transmittal of the Electronic Documents.

Copyright© 2018 National Society of Professional Engineers, American Council of Engineering Companies, and American Society of Civil Engineers. All rights reserved.

ARTICLE 3—CONTRACT DOCUMENTS: INTENT, REQUIREMENTS, REUSE

3.01 *Intent*

A. The Contract Documents are complementary; what is required by one Contract Document is as binding as if required by all.

B. It is the intent of the Contract Documents to describe a functionally complete Project (or part thereof) to be constructed in accordance with the Contract Documents.

C. Unless otherwise stated in the Contract Documents, if there is a discrepancy between the electronic versions of the Contract Documents (including any printed copies derived from such electronic versions) and the printed record version, the printed record version will govern.

D. The Contract supersedes prior negotiations, representations, and agreements, whether written or oral.

E. Engineer will issue clarifications and interpretations of the Contract Documents as provided herein.

F. Any provision or part of the Contract Documents held to be void or unenforceable under any Law or Regulation will be deemed stricken, and all remaining provisions will continue to be valid and binding upon Owner and Contractor, which agree that the Contract Documents will be reformed to replace such stricken provision or part thereof with a valid and enforceable provision that comes as close as possible to expressing the intention of the stricken provision.

G. Nothing in the Contract Documents creates:

1. any contractual relationship between Owner or Engineer and any Subcontractor, Supplier, or other individual or entity performing or furnishing any of the Work, for the benefit of such Subcontractor, Supplier, or other individual or entity; or

2. any obligation on the part of Owner or Engineer to pay or to see to the payment of any money due any such Subcontractor, Supplier, or other individual or entity, except as may otherwise be required by Laws and Regulations.

3.02 *Reference Standards*

A. *Standards Specifications, Codes, Laws and Regulations*

1. Reference in the Contract Documents to standard specifications, manuals, reference standards, or codes of any technical society, organization, or association, or to Laws or Regulations, whether such reference be specific or by implication, means the standard specification, manual, reference standard, code, or Laws or Regulations in effect at the time of opening of Bids (or on the Effective Date of the Contract if there were no Bids), except as may be otherwise specifically stated in the Contract Documents.

2. No provision of any such standard specification, manual, reference standard, or code, and no instruction of a Supplier, will be effective to change the duties or responsibilities of Owner, Contractor, or Engineer from those set forth in the part of the Contract Documents prepared by or for Engineer. No such provision or instruction shall be effective to assign to Owner or Engineer any duty or authority to supervise or direct the

Copyright© 2018 National Society of Professional Engineers, American Council of Engineering Companies, and American Society of Civil Engineers. All rights reserved.

performance of the Work, or any duty or authority to undertake responsibility inconsistent with the provisions of the part of the Contract Documents prepared by or for Engineer.

3.03 *Reporting and Resolving Discrepancies*

A. *Reporting Discrepancies*

1. *Contractor's Verification of Figures and Field Measurements*: Before undertaking each part of the Work, Contractor shall carefully study the Contract Documents, and check and verify pertinent figures and dimensions therein, particularly with respect to applicable field measurements. Contractor shall promptly report in writing to Engineer any conflict, error, ambiguity, or discrepancy that Contractor discovers, or has actual knowledge of, and shall not proceed with any Work affected thereby until the conflict, error, ambiguity, or discrepancy is resolved by a clarification or interpretation by Engineer, or by an amendment or supplement to the Contract issued pursuant to Paragraph 11.01.

2. *Contractor's Review of Contract Documents*: If, before or during the performance of the Work, Contractor discovers any conflict, error, ambiguity, or discrepancy within the Contract Documents, or between the Contract Documents and (a) any applicable Law or Regulation, (b) actual field conditions, (c) any standard specification, manual, reference standard, or code, or (d) any instruction of any Supplier, then Contractor shall promptly report it to Engineer in writing. Contractor shall not proceed with the Work affected thereby (except in an emergency as required by Paragraph 7.15) until the conflict, error, ambiguity, or discrepancy is resolved, by a clarification or interpretation by Engineer, or by an amendment or supplement to the Contract issued pursuant to Paragraph 11.01.

3. Contractor shall not be liable to Owner or Engineer for failure to report any conflict, error, ambiguity, or discrepancy in the Contract Documents unless Contractor had actual knowledge thereof or could have discovered the conflict or error by ~~carefully studying and comparing~~careful review of the Contract Documents ~~and checking and verifying~~including pertinent figures ~~therein~~ and ~~all~~ applicable field measurements and dimensions therein..

B. *Resolving Discrepancies*

1. Except as may be otherwise specifically stated in the Contract Documents, the provisions of the part of the Contract Documents prepared by or for Engineer take precedence in resolving any conflict, error, ambiguity, or discrepancy between such provisions of the Contract Documents and:

a. the provisions of any standard specification, manual, reference standard, or code, or the instruction of any Supplier (whether or not specifically incorporated by reference as a Contract Document); or

b. the provisions of any Laws or Regulations applicable to the performance of the Work (unless such an interpretation of the provisions of the Contract Documents would result in violation of such Law or Regulation).

c. In the event there is a discrepancy or conflict in the Drawings and Specifications applicable to a particular detail or assembly of the Work, Contractor must promptly seek clarification from Engineer before proceeding with the Work. Subject to Paragraph 3.03.A.3. above, if Contractor proceeds with the Work without seeking such clarification, Contractor will be

Copyright© 2018 National Society of Professional Engineers, American Council of Engineering Companies, and American Society of Civil Engineers. All rights reserved.

bound by the stricter and more expensive detail or assembly. Contractor agrees and recognizes that in agreeing to the Contract Price it has factored in the costs associated with installing the stricter and more expensive detail or assembly.

3.04 *Requirements of the Contract Documents*

A. During the performance of the Work and until final payment, Contractor and Owner shall submit to the Engineer in writing all matters in question concerning the requirements of the Contract Documents (sometimes referred to as requests for information or interpretation—RFIs), or relating to the acceptability of the Work under the Contract Documents, as soon as possible after such matters arise. Engineer will be the initial interpreter of the requirements of the Contract Documents, and judge of the acceptability of the Work.

B. Engineer will, with reasonable promptness, render a written clarification, interpretation, or decision on the issue submitted, or initiate an amendment or supplement to the Contract Documents. Engineer's written clarification, interpretation, or decision will be final and binding on Contractor, unless it appeals by submitting a Change Proposal, and on Owner, unless it appeals by filing a Claim.

C. If a submitted matter in question concerns terms and conditions of the Contract Documents that do not involve (1) the performance or acceptability of the Work under the Contract Documents, (2) the design (as set forth in the Drawings, Specifications, or otherwise), or (3) other engineering or technical matters, then Engineer will promptly notify Owner and Contractor in writing that Engineer is unable to provide a decision or interpretation. If Owner and Contractor are unable to agree on resolution of such a matter in question, either party may pursue resolution as provided in Article 12.

3.05 *Reuse of Documents*

A. Contractor and its Subcontractors and Suppliers shall not:

1. have or acquire any title to or ownership rights in any of the Drawings, Specifications, or other documents (or copies of any thereof) prepared by or bearing the seal of Engineer or its consultants, including electronic media versions, or reuse any such Drawings, Specifications, other documents, or copies thereof on extensions of the Project or any other project without written consent of Owner and Engineer and specific written verification or adaptation by Engineer; or

2. have or acquire any title or ownership rights in any other Contract Documents, reuse any such Contract Documents for any purpose without Owner's express written consent, or violate any copyrights pertaining to such Contract Documents.

B. The prohibitions of this Paragraph 3.05 will survive final payment, or termination of the Contract. Nothing herein precludes Contractor from retaining copies of the Contract Documents for record purposes.

ARTICLE 4—COMMENCEMENT AND PROGRESS OF THE WORK

4.01 *Commencement of Contract Times; Notice to Proceed* ~~*(Old 2.03)*~~

A. The Contract Times ~~will~~shall not commence to run and Contractor shall not commence ~~on the 30th day after the Effective Date of the Contract or, if~~the Work until Owner issues a Notice to

Copyright© 2018 National Society of Professional Engineers, American Council of Engineering Companies, and American Society of Civil Engineers. All rights reserved.

Proceed ~~is given, on the day indicated in the Notice to Proceed~~. A Notice to Proceed may be ~~given~~issued by Owner at any time ~~within 30 days~~ after the Effective Date of the Contract. ~~In no event will the Contract Times commence to run later than the 60th day after the day of Bid opening or the 30th day after the Effective Date of the Contract, whichever date is earlier.~~

4.02 *Starting the Work*

A. Contractor shall start to perform the Work on the date ~~when~~ specified in the Notice to Proceed which shall cause the Contract Times to commence to run. No Work may be done at the Site prior to such date.

4.03 *Reference Points*

A. Owner shall provide engineering surveys to establish reference points for construction which in Engineer's judgment are necessary to enable Contractor to proceed with the Work. Contractor shall be responsible for laying out the Work, shall protect and preserve the established reference points and property monuments, and shall make no changes or relocations without the prior written approval of Owner. Contractor shall report to Engineer whenever any reference point or property monument is lost or destroyed or requires relocation because of necessary changes in grades or locations, and shall be responsible for the accurate replacement or relocation of such reference points or property monuments by professionally qualified personnel.

B. Contractor shall lay-out and verify all field dimensions and measurements at the Site before proceeding with any portion of the Work.

4.04 *Progress Schedule*

A. Contractor shall adhere to the Progress Schedule established in accordance with Paragraph 2.05 as it may be adjusted from time to time as provided below.

1. Contractor shall submit to Engineer for acceptance (to the extent indicated in Paragraph 2.05) proposed adjustments in the Progress Schedule that will not result in changing the Contract Times.

2. Proposed adjustments in the Progress Schedule that will change the Contract Times must be submitted in accordance with the requirements of Article 11.

B. Contractor shall carry on the Work and adhere to the Progress Schedule during all disputes or disagreements with Owner. No Work will be delayed or postponed pending resolution of any disputes or disagreements, or during any appeal process, except as permitted by Paragraph 16.04, or as Owner and Contractor may otherwise agree in writing.

4.05 *Delays in Contractor's Progress*

A. If Owner, Engineer, or anyone for whom Owner is responsible, delays, disrupts, or interferes with the performance or progress of the Work, then Contractor shall only be entitled to an equitable adjustment in ~~Contract Price or~~ Contract Times.

B. Contractor shall not be entitled to an adjustment in Contract Price or Contract Times for delay, disruption, or interference caused by or within the control of Contractor. Delay, disruption,

Copyright© 2018 National Society of Professional Engineers, American Council of Engineering Companies, and American Society of Civil Engineers. All rights reserved.

and interference attributable to and within the control of a Subcontractor or Supplier shall be deemed to be within the control of Contractor.

C. If Contractor's performance or progress is delayed, disrupted, or interfered with by unanticipated causes not the fault of and beyond the control of Owner, Contractor, and those for which they are responsible, then Contractor shall be entitled to an equitable adjustment in Contract Times. Such an adjustment will be Contractor's sole and exclusive remedy for the delays, disruption, and interference described in this paragraph. Unanticipated ~~C~~causes of delay, disruption, or interference that may give rise to an adjustment in Contract Times under this paragraph include but are not limited to the following:

1. Severe and unavoidable natural catastrophes such as fires, floods, epidemics, and earthquakes;
2. Abnormal weather conditions not anticipated or customary in Volusia County;
3. Acts or failures to act of third-party utility owners or other third-party entities (other than those third-party utility owners or other third-party entities performing other work at or adjacent to the Site as arranged by or under contract with Owner, as contemplated in Article 8); and
4. Acts of war or terrorism.

D. Contractor's entitlement to an adjustment of Contract Times ~~or Contract Price~~ is limited as follows:

1. Contractor's entitlement to an adjustment of the Contract Times is conditioned on the delay, disruption, or interference adversely affecting an activity on the critical path to completion of the Work, as of the time of the delay, disruption, or interference.
2. Deleted in its entirety.~~Contractor shall not be entitled to an adjustment in Contract Price for any delay, disruption, or interference if such delay is concurrent with a delay, disruption, or interference caused by or within the control of Contractor. Such a concurrent delay by Contractor shall not preclude an adjustment of Contract Times to which Contractor is otherwise entitled.~~
3. Adjustments of Contract Times ~~or Contract Price~~ are subject to the provisions of Article 11.

E. Each Contractor request or Change Proposal seeking an increase in Contract Times ~~or Contract Price~~ must be supplemented by supporting data that sets forth in detail the following:

1. The circumstances that form the basis for the requested adjustment;
2. The date upon which each cause of delay, disruption, or interference began to affect the progress of the Work;
3. The date upon which each cause of delay, disruption, or interference ceased to affect the progress of the Work;
4. The number of days' increase in Contract Times claimed as a consequence of each such cause of delay, disruption, or interference; and

Copyright© 2018 National Society of Professional Engineers, American Council of Engineering Companies, and American Society of Civil Engineers. All rights reserved.

5. Deleted in its entirety.~~The impact on Contract Price, in accordance with the provisions of Paragraph 11.07.~~

Contractor shall also furnish such additional supporting documentation as Owner or Engineer may require including, where appropriate, a revised progress schedule indicating all the activities affected by the delay, disruption, or interference, and an explanation of the effect of the delay, disruption, or interference on the critical path to completion of the Work.

F. Delays, disruption, and interference to the performance or progress of the Work resulting from the existence of a differing subsurface or physical condition, an Underground Facility that was not shown or indicated by the Contract Documents, or not shown or indicated with reasonable accuracy, and those resulting from Hazardous Environmental Conditions, are governed by Article 5, together with the provisions of Paragraphs 4.05.D and 4.05.E.

G. Paragraph 8.03 addresses delays, disruption, and interference to the performance or progress of the Work resulting from the performance of certain other work at or adjacent to the Site.

ARTICLE 5—SITE; SUBSURFACE AND PHYSICAL CONDITIONS; HAZARDOUS ENVIRONMENTAL CONDITIONS

5.01 *Availability of Lands* ~~*(Old 4.01)*~~

A. Owner shall furnish the Site. Owner shall notify Contractor in writing of any encumbrances or restrictions not of general application but specifically related to use of the Site with which Contractor must comply in performing the Work.

B. Deleted in its entirety.~~Upon reasonable written request, Owner shall furnish Contractor with a current statement of record legal title and legal description of the lands upon which permanent improvements are to be made and Owner's interest therein as necessary for giving notice of or filing a mechanic's or construction lien against such lands in accordance with applicable Laws and Regulations.~~

C. Contractor shall provide for all additional lands and access thereto that may be required for temporary construction facilities, staging, or storage of materials and equipment. Contractor shall have the obligation to restore the additional lands to their original condition.

5.02 *Use of Site and Other Areas* ~~*(Old 6.11)*~~

A. *Limitation on Use of Site and Other Areas*

1. Contractor shall confine construction equipment, temporary construction facilities, the storage of materials and equipment, and the operations of workers to the Site, adjacent areas that Contractor has arranged to use through construction easements or otherwise, and other adjacent areas permitted by Laws and Regulations, and shall not unreasonably encumber the Site and such other adjacent areas with construction equipment or other materials or equipment. Contractor shall assume full responsibility for (a) damage to the Site; (b) damage to any such other adjacent areas used for Contractor's operations; (c) damage to any other adjacent land or areas, or to improvements, structures, utilities, or similar facilities located at such adjacent lands or areas; and (d) for injuries and losses sustained by the owners or occupants of any such land or areas; provided that such

Copyright© 2018 National Society of Professional Engineers, American Council of Engineering Companies, and American Society of Civil Engineers. All rights reserved.

damage or injuries result from the performance of the Work or from other actions or conduct of the Contractor or those for which Contractor is responsible.

2. If a damage or injury claim is made by the owner or occupant of any such land or area because of the performance of the Work, or because of other actions or conduct of the Contractor or those for which Contractor is responsible, Contractor shall (a) take immediate corrective or remedial action as required by Paragraph 7.13, or otherwise; (b) promptly attempt to settle the claim as to all parties through negotiations with such owner or occupant, or otherwise resolve the claim by arbitration or other dispute resolution proceeding, or in a court of competent jurisdiction; and (c) to the fullest extent permitted by Laws and Regulations, indemnify and hold harmless Owner and Engineer, and the officers, directors, members, partners, employees, agents, consultants and subcontractors of each and any of them, from and against any such claim, and against all costs, losses, and damages (including but not limited to all fees and charges of engineers, architects, attorneys, and other professionals and all court or arbitration or other dispute resolution costs) arising out of or relating to any claim or action, legal or equitable, brought by any such owner or occupant against Owner, Engineer, or any other party indemnified hereunder to the extent caused directly or indirectly, in whole or in part by, or based upon, Contractor's performance of the Work, or because of other actions or conduct of the Contractor or those for which Contractor is responsible.

B. *Removal of Debris During Performance of the Work*: During the progress of the Work the Contractor shall keep the Site and other adjacent areas free from accumulations of waste materials, rubbish, and other debris. The Contractor shall prevent paint, mortar, and concrete splatter on concrete sidewalks and stairwell ~~tower~~ ~~floor~~spads. Any such splatter shall be immediately removed so no evidence of splatter remains. All construction debris shall be removed in a timely manner. Surrounding graded and grassed areas shall be regularly magnetically scanned to collect miscellaneous nails and other sharp objects~~.~~; the Contractor shall remove such objects from the construction site. Removal and disposal of such waste materials, rubbish, and other debris will conform to applicable Laws and Regulations.

C. *Cleaning*: Prior to Substantial Completion of the Work Contractor shall clean the Site and the Work and make it ready for utilization by Owner. Concrete and ceramic surfaces shall be cleaned and washed. Woodwork and resilient flooring shall be dusted and cleaned. Sash, fixtures and equipment shall be thoroughly cleaned. Stains, spots, dust. marks and smears shall be removed from all surfaces. Hardware and metal surfaces shall be cleaned and polished. Glass and plastic surfaces shall be thoroughly cleaned by professional window cleaners. All damaged, broken or scratched glass or plastic shall be replaced by the Contractor at the Contractor's expense. At the completion of the Work Contractor shall remove from the Site and adjacent areas all tools, appliances, construction equipment and machinery, and surplus materials and shall restore to original condition all property not designated for alteration by the Contract Documents.

D. *Loading of Structures*: Contractor shall not load nor permit any part of any structure to be loaded in any manner that will endanger the structure, nor shall Contractor subject any part of the Work or adjacent structures or land to stresses or pressures that will endanger them.

Copyright© 2018 National Society of Professional Engineers, American Council of Engineering Companies, and American Society of Civil Engineers. All rights reserved.

5.03 *Subsurface and Physical Conditions*

A. *Reports and Drawings*: The Supplementary Conditions identify:

1. Those reports of explorations and tests of subsurface conditions at or adjacent to the Site that contain Technical Data;

2. Those drawings of existing physical conditions at or adjacent to the Site, including those drawings depicting existing surface or subsurface structures at or adjacent to the Site (except Underground Facilities), that contain Technical Data; and

3. Technical Data contained in such reports and drawings.

B. *Underground Facilities*: Underground Facilities are shown or indicated on the Drawings, pursuant to Paragraph 5.05, and not in the drawings referred to in Paragraph 5.03.A. Information and data regarding the presence or location of Underground Facilities are not intended to be categorized, identified, or defined as Technical Data.

C. *Reliance by Contractor on Technical Data*: Contractor may rely upon the accuracy of the Technical Data expressly identified in the Supplementary Conditions with respect to such reports and drawings, but such reports and drawings are not Contract Documents and shall under no circumstances relieve Contractor from visiting the Site and becoming familiar with and satisfied as to the general, local, and Site conditions that may affect cost, progress, and performance of the Work. If no such express identification has been made, then Contractor may rely upon the accuracy of the Technical Data as defined in Paragraph 1.01.A.46.b.

D. *Limitations of Other Data and Documents*: Except for such reliance on Technical Data, Contractor may not rely upon or make any claim against Owner or Engineer, or any of their officers, directors, members, partners, employees, agents, consultants, or subcontractors, with respect to:

1. the completeness of such reports and drawings for Contractor's purposes, including, but not limited to, any aspects of the means, methods, techniques, sequences, and procedures of construction to be employed by Contractor, and safety precautions and programs incident thereto;

2. other data, interpretations, opinions, and information contained in such reports or shown or indicated in such drawings;

3. the contents of other Site-related documents made available to Contractor, such as record drawings from other projects at or adjacent to the Site, or Owner's archival documents concerning the Site; or

4. any Contractor interpretation of or conclusion drawn from any Technical Data or any such other data, interpretations, opinions, or information.

5.04 *Differing Subsurface or Physical Conditions*

A. *Notice by Contractor*: If Contractor believes that any subsurface or physical condition that is uncovered or revealed at the Site:

1. is of such a nature as to establish that any Technical Data on which Contractor is entitled to rely as provided in Paragraph 5.03 is materially inaccurate;

Copyright© 2018 National Society of Professional Engineers, American Council of Engineering Companies, and American Society of Civil Engineers. All rights reserved.

2. is of such a nature as to require a change in the Drawings or Specifications;

3. differs materially from that shown or indicated in the Contract Documents; or

4. is of an unusual nature, and differs materially from conditions ordinarily encountered and generally recognized as inherent in work of the character provided for in the Contract Documents;

then Contractor shall, promptly after first becoming aware thereof and before further disturbing the subsurface or physical conditions or performing any Work in connection therewith (except in an emergency as required by Paragraph 7.15), notify Owner and Engineer in writing about such condition within 5 days. Contractor shall not further disturb such condition or perform any Work in connection therewith (except with respect to an emergency) until receipt of a written statement permitting Contractor to do so.

B. *Engineer's Review*: After receipt of written notice as required by the preceding paragraph, Engineer will promptly review the subsurface or physical condition in question; determine whether it is necessary for Owner to obtain additional exploration or tests with respect to the condition; conclude whether the condition falls within any one or more of the differing site condition categories in Paragraph 5.04.A; obtain any pertinent cost or schedule information from Contractor; prepare recommendations to Owner regarding the Contractor's resumption of Work in connection with the subsurface or physical condition in question and the need for any change in the Drawings or Specifications; and advise Owner in writing of Engineer's findings, conclusions, and recommendations.

C. *Owner's Statement to Contractor Regarding Site Condition*: After receipt of Engineer's written findings, conclusions, and recommendations, Owner shall issue a written statement to Contractor (with a copy to Engineer) regarding the subsurface or physical condition in question, addressing the resumption of Work in connection with such condition, indicating whether any change in the Drawings or Specifications will be made, and adopting or rejecting Engineer's written findings, conclusions, and recommendations, in whole or in part.

D. *Early Resumption of Work*: If at any time Engineer determines that Work in connection with the subsurface or physical condition in question may resume prior to completion of Engineer's review or Owner's issuance of its statement to Contractor, because the condition in question has been adequately documented, and analyzed on a preliminary basis, then the Engineer may at its discretion instruct Contractor to resume such Work.

E. *Possible Price and Times Adjustments*

1. Contractor shall be entitled to an equitable adjustment in Contract Price or Contract Times, to the extent that the existence of a differing subsurface or physical condition, or any related delay, disruption, or interference, causes an increase or decrease in Contractor's cost of, or time required for, performance of the Work; subject, however, to the following:

   a. Such condition must fall within any one or more of the categories described in Paragraph 5.04.A;

   b. With respect to Work that is paid for on a unit price basis, any adjustment in Contract Price will be subject to the provisions of Paragraph 13.03; and,

Copyright© 2018 National Society of Professional Engineers, American Council of Engineering Companies, and American Society of Civil Engineers. All rights reserved.

c. Contractor's entitlement to an adjustment of the Contract Times is subject to the provisions of Paragraphs 4.05.D and 4.05.E.

2. Contractor shall not be entitled to any adjustment in the Contract Price or Contract Times with respect to a subsurface or physical condition if:

a. Contractor knew of the existence of such condition at the time Contractor made a commitment to Owner with respect to Contract Price and Contract Times by the submission of a Bid or becoming bound under a negotiated contract, or otherwise;

b. The existence of such condition reasonably could have been discovered or revealed as a result of any examination, investigation, exploration, test, or study of the Site and contiguous areas expressly required by the Bidding Requirements or Contract Documents to be conducted by or for Contractor prior to Contractor's making such commitment; or

c. Contractor failed to give the written notice required by Paragraph 5.04.A.

3. If Owner and Contractor agree regarding Contractor's entitlement to and the amount or extent of any adjustment in the Contract Price or Contract Times, then any such adjustment will be set forth in a Change Order.

4. Contractor may submit a Change Proposal regarding its entitlement to or the amount or extent of any adjustment in the Contract Price or Contract Times, no later than 30 days after Owner's issuance of the Owner's written statement to Contractor regarding the subsurface or physical condition in question.

F. *Underground Facilities; Hazardous Environmental Conditions*: Paragraph 5.05 governs rights and responsibilities regarding the presence or location of Underground Facilities. Paragraph 5.06 governs rights and responsibilities regarding Hazardous Environmental Conditions. The provisions of Paragraphs 5.03 and 5.04 are not applicable to the presence or location of Underground Facilities, or to Hazardous Environmental Conditions.

5.05 *Underground Facilities*

A. *Contractor's Responsibilities*: Unless it is otherwise expressly provided in the Supplementary Conditions, the cost of all of the following are included in the Contract Price, and Contractor shall have full responsibility for:

1. reviewing and checking all information and data regarding existing Underground Facilities at the Site;

2. complying with applicable state and local utility damage prevention Laws and Regulations;

3. verifying the actual location of those Underground Facilities shown or indicated in the Contract Documents as being within the area affected by the Work, by exposing such Underground Facilities during the course of construction;

4. coordination of the Work with the owners (including Owner) of such Underground Facilities, during construction; and

Copyright© 2018 National Society of Professional Engineers, American Council of Engineering Companies, and American Society of Civil Engineers. All rights reserved.

5. the safety and protection of all existing Underground Facilities at the Site, and repairing any damage thereto resulting from the Work.

B. *Notice by Contractor*: If Contractor believes that an Underground Facility that is uncovered or revealed at the Site was not shown or indicated on the Drawings, or was not shown or indicated on the Drawings with reasonable accuracy, then Contractor shall, promptly after first becoming aware thereof and before further disturbing conditions affected thereby or performing any Work in connection therewith (except in an emergency as required by Paragraph 7.15), notify Owner and Engineer in writing regarding such Underground Facility within 5 days.

C. *Engineer's Review*: Engineer will:

1. promptly review the Underground Facility and conclude whether such Underground Facility was not shown or indicated on the Drawings, or was not shown or indicated with reasonable accuracy;

2. identify and communicate with the owner of the Underground Facility; prepare recommendations to Owner (and if necessary issue any preliminary instructions to Contractor) regarding the Contractor's resumption of Work in connection with the Underground Facility in question;

3. obtain any pertinent cost or schedule information from Contractor; determine the extent, if any, to which a change is required in the Drawings or Specifications to reflect and document the consequences of the existence or location of the Underground Facility; and

4. advise Owner in writing of Engineer's findings, conclusions, and recommendations.

During such time, Contractor shall be responsible for the safety and protection of such Underground Facility.

D. *Owner's Statement to Contractor Regarding Underground Facility*: After receipt of Engineer's written findings, conclusions, and recommendations, Owner shall issue a written statement to Contractor (with a copy to Engineer) regarding the Underground Facility in question addressing the resumption of Work in connection with such Underground Facility, indicating whether any change in the Drawings or Specifications will be made, and adopting or rejecting Engineer's written findings, conclusions, and recommendations in whole or in part.

E. *Early Resumption of Work*: If at any time Engineer determines that Work in connection with the Underground Facility may resume prior to completion of Engineer's review or Owner's issuance of its statement to Contractor, because the Underground Facility in question and conditions affected by its presence have been adequately documented, and analyzed on a preliminary basis, then the Engineer may at its discretion instruct Contractor to resume such Work.

F. *Possible Price and Times Adjustments*

1. Contractor shall be entitled to an equitable adjustment in the Contract Price or Contract Times, to the extent that any existing Underground Facility at the Site that was not shown or indicated on the Drawings, or was not shown or indicated with reasonable accuracy, or any related delay, disruption, or interference, causes an increase or decrease in

Copyright© 2018 National Society of Professional Engineers, American Council of Engineering Companies, and American Society of Civil Engineers. All rights reserved.

Contractor's cost of, or time required for, performance of the Work; subject, however, to the following:

a. With respect to Work that is paid for on a unit price basis, any adjustment in Contract Price will be subject to the provisions of Paragraph 13.03;

b. Contractor's entitlement to an adjustment of the Contract Times is subject to the provisions of Paragraphs 4.05.D and 4.05.E; and

c. Contractor gave the notice required in Paragraph 5.05.B.

2. If Owner and Contractor agree regarding Contractor's entitlement to and the amount or extent of any adjustment in the Contract Price or Contract Times, then any such adjustment will be set forth in a Change Order.

3. Contractor may submit a Change Proposal regarding its entitlement to or the amount or extent of any adjustment in the Contract Price or Contract Times, no later than 30 days after Owner's issuance of the Owner's written statement to Contractor regarding the Underground Facility in question.

4. The information and data shown or indicated on the Drawings with respect to existing Underground Facilities at the Site is based on information and data (a) furnished by the owners of such Underground Facilities, or by others, (b) obtained from available records, or (c) gathered in an investigation conducted in accordance with the current edition of ASCE 38, Standard Guideline for the Collection and Depiction of Existing Subsurface Utility Data, by the American Society of Civil Engineers. If such information or data is incorrect or incomplete, Contractor's remedies are limited to those set forth in this Paragraph 5.05.F.

5.06 *Hazardous Environmental Conditions at Site*

A. *Reports and Drawings*: The Supplementary Conditions identify:

1. those reports known to Owner relating to Hazardous Environmental Conditions that have been identified at or adjacent to the Site;

2. drawings known to Owner relating to Hazardous Environmental Conditions that have been identified at or adjacent to the Site; and

3. Technical Data contained in such reports and drawings.

B. *Reliance by Contractor on Technical Data Authorized*: Contractor may rely upon the accuracy of the Technical Data expressly identified in the Supplementary Conditions with respect to such reports and drawings, but such reports and drawings are not Contract Documents. If no such express identification has been made, then Contractor may rely on the accuracy of the Technical Data as defined in Paragraph 1.01.A.46.b. Except for such reliance on Technical Data, Contractor may not rely upon or make any claim against Owner or Engineer, or any of their officers, directors, members, partners, employees, agents, consultants, or subcontractors, with respect to:

1. the completeness of such reports and drawings for Contractor's purposes, including, but not limited to, any aspects of the means, methods, techniques, sequences and procedures

Copyright© 2018 National Society of Professional Engineers, American Council of Engineering Companies, and American Society of Civil Engineers. All rights reserved.

of construction to be employed by Contractor, and safety precautions and programs incident thereto;

2. other data, interpretations, opinions, and information contained in such reports or shown or indicated in such drawings; or

3. any Contractor interpretation of or conclusion drawn from any Technical Data or any such other data, interpretations, opinions or information.

C. Contractor shall not be responsible for removing or remediating any Hazardous Environmental Condition encountered, uncovered, or revealed at the Site unless such removal or remediation is expressly identified in the Contract Documents to be within the scope of the Work.

D. Contractor shall be responsible for controlling, containing, and duly removing all Constituents of Concern brought to the Site by Contractor, Subcontractors, Suppliers, or anyone else for whom Contractor is responsible, and for any associated costs; and for the costs of removing and remediating any Hazardous Environmental Condition created by the presence of any such Constituents of Concern.

E. If Contractor encounters, uncovers, or reveals a Hazardous Environmental Condition whose removal or remediation is not expressly identified in the Contract Documents as being within the scope of the Work, or if Contractor or anyone for whom Contractor is responsible creates a Hazardous Environmental Condition, then Contractor shall immediately: (1) secure or otherwise isolate such condition; (2) stop all Work in connection with such condition and in any area affected thereby (except in an emergency as required by Paragraph 7.15); and (3) notify Owner and Engineer (and promptly thereafter confirm such notice in writing) within 5 days of first becoming aware of the condition. Owner shall promptly consult with Engineer concerning the necessity for Owner to retain a qualified expert to evaluate such condition or take corrective action, if any. Promptly after consulting with Engineer, Owner shall take such actions as are necessary to permit Owner to timely obtain required permits and provide Contractor the written notice required by Paragraph 5.06.F. If Contractor or anyone for whom Contractor is responsible created the Hazardous Environmental Condition in question, then Owner may remove and remediate the Hazardous Environmental Condition, and impose a set-off against payments to account for the associated costs.

F. Contractor shall not resume Work in connection with such Hazardous Environmental Condition or in any affected area until after Owner has obtained any required permits related thereto, and delivered written notice to Contractor either (1) specifying that such condition and any affected area is or has been rendered safe for the resumption of Work, or (2) specifying any special conditions under which such Work may be resumed safely. An equitable adjustment shall be made in the Contract Price or Contract Time, or both, to the extent that (i) they are attributable to the existence or location of any Hazardous Environmental Condition that was not shown or indicated or not shown or indicated with reasonable accuracy in the Contract Documents or a report listed in the Supplemental Conditions, (ii) Contractor did not know of and could not reasonably have been expected to be aware of or to have anticipated the Hazardous Environmental Conditions, (iii) Contractor did not negligently, recklessly, or intentionally cause the Hazardous Environmental Condition, and (iv)

Copyright© 2018 National Society of Professional Engineers, American Council of Engineering Companies, and American Society of Civil Engineers. All rights reserved.

Contractor notifies Owner and Engineer of such condition within 5 days after first becoming aware of such condition.

G. If Owner and Contractor cannot agree as to entitlement to or on the amount or extent, if any, of any adjustment in Contract Price or Contract Times, as a result of such Work stoppage, such special conditions under which Work is agreed to be resumed by Contractor, or any costs or expenses incurred in response to the Hazardous Environmental Condition, then within 30 days of Owner's written notice regarding the resumption of Work, Contractor may submit a Change Proposal, or Owner may impose a set-off. Entitlement to any such adjustment is subject to the provisions of Paragraphs 4.05.D, 4.05.E, 11.07, and 11.08.

H. If, after receipt of such written notice, Contractor does not agree to resume such Work based on a reasonable belief it is unsafe, or does not agree to resume such Work under such special conditions, then Owner may order the portion of the Work that is in the area affected by such condition to be deleted from the Work, following the contractual change procedures in Article 11. Owner may have such deleted portion of the Work performed by Owner's own forces or others in accordance with Article 8.

I. Deleted in its entirety.~~To the fullest extent permitted by Laws and Regulations, Owner shall indemnify and hold harmless Contractor, Subcontractors, and Engineer, and the officers, directors, members, partners, employees, agents, consultants, and subcontractors of each and any of them, from and against all claims, costs, losses, and damages (including but not limited to all fees and charges of engineers, architects, attorneys, and other professionals, and all court, arbitration, or other dispute resolution costs) arising out of or relating to a Hazardous Environmental Condition, provided that such Hazardous Environmental Condition (1) was not shown or indicated in the Drawings, Specifications, or other Contract Documents, identified as Technical Data entitled to limited reliance pursuant to Paragraph 5.06.B, or identified in the Contract Documents to be included within the scope of the Work, and (2) was not created by Contractor or by anyone for whom Contractor is responsible. Nothing in this Paragraph 5.06.I obligates Owner to indemnify any individual or entity from and against the consequences of that individual's or entity's own negligence.~~

J. Deleted in its entirety.~~To the fullest extent permitted by Laws and Regulations, Contractor shall indemnify and hold harmless Owner and Engineer, and the officers, directors, members, partners, employees, agents, consultants, and subcontractors of each and any of them, from and against all claims, costs, losses, and damages (including but not limited to all fees and charges of engineers, architects, attorneys, and other professionals and all court or arbitration or other dispute resolution costs) arising out of or relating to the failure to control, contain, or remove a Constituent of Concern brought to the Site by Contractor or by anyone for whom Contractor is responsible, or to a Hazardous Environmental Condition created by Contractor or by anyone for whom Contractor is responsible. Nothing in this Paragraph 5.06.J obligates Contractor to indemnify any individual or entity from and against the consequences of that individual's or entity's own negligence~~.

K. Deleted in its entirety.~~The provisions of Paragraphs 5.03, 5.04, and 5.05 do not apply to the presence of Constituents of Concern or to a Hazardous Environmental Condition uncovered or revealed at the Site.~~

Copyright© 2018 National Society of Professional Engineers, American Council of Engineering Companies, and American Society of Civil Engineers. All rights reserved.

ARTICLE 6—BONDS AND INSURANCE

6.01 *Performance, Payment, and Other Bonds*

A. Contractor shall furnish a payment and performance bond ~~and a payment bond~~ in accordance with Sec. ~~,~~ 255.05, Florida Statutes, ~~each~~ in an amount at least equal to the Contract Price, as security for the faithful performance and payment of Contractor's obligations under the Contract. These bonds must remain in effect until one year after the date when final payment becomes due or until completion of the correction period specified in Paragraph 15.08, whichever is later, except as provided otherwise by Laws or Regulations, the terms of a prescribed bond form, the Supplementary Conditions, or other provisions of the Contract. The obligations, duties, responsibilities, and requirements of Contractor set forth in this Contract shall be incorporated into Contractor's performance bond.

B. Contractor shall also furnish such other bonds (if any) as are required by the Supplementary Conditions or other provisions of the Contract.

C. All bonds must be in the form included in the Bidding Documents or otherwise specified by Owner prior to execution of the Contract~~, except as provided otherwise by Laws or Regulations, and must be issued and signed by a surety named in "Companies Holding Certificates of Authority as Acceptable Sureties on Federal Bonds and as Acceptable Reinsuring Companies" as published in Department Circular 570 (as amended and supplemented) by the Bureau of the Fiscal Service, U.S. Department of the Treasury~~. A bond signed by an agent or attorney-in-fact must be accompanied by a certified copy of that individual's authority to bind the surety. The evidence of authority must show that it is effective on the date the agent or attorney-in-fact signed the accompanying bond. The payment and performance bonds shall be recorded in the public records of Volusia County, Florida.

D. Contractor shall obtain the required bonds from surety companies that are duly licensed or authorized, in ~~the state or jurisdiction in which the Project is located~~Florida, to issue bonds in the required amounts.

E. If the surety on a bond furnished by Contractor is declared bankrupt or becomes insolvent, or the surety ceases to meet the requirements above, then Contractor shall promptly notify Owner and Engineer in writing and shall, within 20 days after the event giving rise to such notification, provide another bond and surety, both of which must comply with the bond and surety requirements above.

F. Prior to the date of commencement as set forth in the Notice to Proceed, ~~I~~if Contractor has failed to obtain a required bond, Owner may exclude the Contractor from the Site and exercise Owner's termination rights under Article 16.

G. Upon request to Owner from any Subcontractor, Supplier, or other person or entity claiming to have furnished labor, services, materials, or equipment used in the performance of the Work, Owner shall provide a copy of the payment bond to such person or entity.

H. Upon request to Contractor from any Subcontractor, Supplier, or other person or entity claiming to have furnished labor, services, materials, or equipment used in the performance of the Work, Contractor shall provide a copy of the payment bond to such person or entity.

Copyright© 2018 National Society of Professional Engineers, American Council of Engineering Companies, and American Society of Civil Engineers. All rights reserved.

6.02 *Insurance—General Provisions*

A. ~~Owner and~~ Contractor shall obtain and maintain insurance as required in this article.

B. All insurance required by the Contract to be purchased and maintained by Owner or Contractor shall be obtained from insurance companies that are duly licensed or authorized in the sState or jurisdiction in which the Project is locatedof Florida to issue insurance policies for the required limits and coverages. Unless a different standard is indicated ~~in the~~ Supplementary Conditions, all companies that provide insurance policies required under this Contract shall ~~have an A.M. Best rating of A-VII or better.~~

C. Alternative forms of insurance coverage, including but not limited to self-insurance and "Occupational Accident and Excess Employer's Indemnity Policies," are not sufficient to meet the insurance requirements of this Contract, unless expressly allowed in the Supplementary Conditions.

D. Contractor shall deliver to Owner, with copies to each additional insured identified in the Contract, certificates of insurance and endorsements establishing that Contractor has obtained and is maintaining the policies and coverages required by the Contract. Upon request by Owner or any other insured, Contractor shall also furnish other evidence of such required insurance, including but not limited to copies of policies, documentation of applicable self-insured retentions (if allowed) and deductibles, full disclosure of all relevant exclusions, and evidence of insurance required to be purchased and maintained by Subcontractors or Suppliers. In any documentation furnished under this provision, Contractor, Subcontractors, and Suppliers may block out (redact) (1) any confidential premium or pricing information and (2) any wording specific to a project or jurisdiction other than those applicable to this Contract.

E. Deleted in its entirety.Owner shall deliver to Contractor, with copies to each additional insured identified in the Contract, certificates of insurance and endorsements establishing that Owner has obtained and is maintaining the policies and coverages required of Owner by the Contract (if any). ~~Upon request by Contractor or any other insured, Owner shall also provide other evidence of such required insurance (if any), including but not limited to copies of policies, documentation of applicable self-insured retentions (if allowed) and deductibles, and full disclosure of all relevant exclusions. In any documentation furnished under this provision, Owner may block out (redact) (1) any confidential premium or pricing information and (2) any wording specific to a project or jurisdiction other than those relevant to this Contract.~~

F. Failure of Owner or Contractor to demand such certificates or other evidence of the Contractorother party's full compliance with these insurance requirements, or failure of Owner or Contractor to identify a deficiency in compliance from the evidence provided, will not be construed as ~~a waiver of the~~ other partyContractor's obligation to obtain and maintain such insurance.

G. In addition to the liability insurance required to be provided by Contractor, the Owner, at Owner's option, may purchase and maintain ~~Owner's own~~ liability insurance. Owner's liability

Copyright© 2018 National Society of Professional Engineers, American Council of Engineering Companies, and American Society of Civil Engineers. All rights reserved.

policies, if any, operate separately and independently from policies required to be provided by Contractor, and Contractor cannot rely upon Owner's liability policies for any of Contractor's obligations to the Owner, Engineer, or third parties.

H. Contractor shall require:

1. Subcontractors to purchase and maintain worker's compensation, commercial general liability, and other insurance that is appropriate for their participation in the Project, and to name as additional insureds Owner and Engineer (and any other individuals or entities identified in the Supplementary Conditions as additional insureds on Contractor's liability policies) on each Subcontractor's commercial general liability insurance policy; and

2. Suppliers to purchase and maintain insurance that is appropriate for their participation in the Project.

I. If ~~either party~~Contractor does not purchase or maintain the insurance required ~~of such party~~ by the Contract, Contractor~~such party~~ shall notify the Owner~~other party~~ in writing of such failure to purchase prior to the start of the Work, or of such failure to maintain prior to any change in the required coverage.

J. If Contractor has failed to obtain and maintain required insurance, Contractor's entitlement to enter or remain at the Site will end immediately, and Owner may impose an appropriate set-off against payment for any associated costs (including but not limited to the cost of purchasing necessary insurance coverage), and exercise Owner's termination rights under Article 16.

K. Without prejudice to any other right or remedy, if Contractor~~a party~~ has failed to obtain required insurance, the Owner~~other party~~ may elect (but is in no way obligated) to obtain equivalent insurance to protect ~~such other party's~~Owner's interests at the expense of the Contactor~~party~~ who was required to provide such coverage, and the Contract Price will be adjusted accordingly.

L. Owner does not represent that insurance coverage and limits established in this Contract necessarily will be adequate to protect Contractor or Contractor's interests. Contractor is responsible for determining whether such coverage and limits are adequate to protect its interests, and for obtaining and maintaining any additional insurance that Contractor deems necessary.

M. The insurance and insurance limits required herein will not be deemed as a limitation on Contractor's liability, or that of its Subcontractors or Suppliers, under the indemnities granted to Owner and other individuals and entities in the Contract or otherwise.

N. All the policies of insurance required to be purchased and maintained under this Contract will contain a provision or endorsement that the coverage afforded will not be canceled, or renewal refused, until at least 10 days prior written notice has been given to the purchasing policyholder. Within three days of receipt of any such written notice, the purchasing policyholder shall provide a copy of the notice to each other insured and Engineer.

Copyright© 2018 National Society of Professional Engineers, American Council of Engineering Companies, and American Society of Civil Engineers. All rights reserved.

6.03 *Contractor's Insurance*

A. *Required Insurance*: Contractor shall purchase and maintain Worker's Compensation, Commercial General Liability, and other insurance pursuant to the specific requirements of the ~~Supplementary Conditions~~ Solicitation / ITB document referenced in Article 7 of the Agreement.

B. *General Provisions*: The policies of insurance required by this Paragraph 6.03 as supplemented must:

1. include at least the specific coverages required;

2. be written for not less than the limits provided, or those required by Laws or Regulations, whichever is greater;

3. remain in effect at least until the Work is complete (as set forth in Paragraph 15.06.D), and longer if expressly required elsewhere in this Contract, and at all times thereafter when Contractor may be correcting, removing, or replacing defective Work as a warranty or correction obligation, or otherwise, or returning to the Site to conduct other tasks arising from the Contract;

4. apply with respect to the performance of the Work, whether such performance is by Contractor, any Subcontractor or Supplier, or by anyone directly or indirectly employed by any of ~~them~~ to perform any of the Work, or by anyone for whose acts any of them may be liable; and

5. include completed operations coverage:

a. Such insurance shall remain in effect for 10 years after Substantial Completion.

b. Contractor shall furnish Owner and each additional insured identified in the Supplementary Conditions evidence satisfactory to Owner of continuation of such insurance at final payment.

6. make the Contractor solely responsible for any insurance deductible or self-insured retention.

7. include all necessary endorsements to support the stated requirements.

C. *Additional Insureds*: The Contractor's commercial general liability, automobile liability, employer's liability, umbrella or excess, pollution liability, and unmanned aerial vehicle liability policies, if required by this Contract, must:

1. include and list as additional insureds Owner and Engineer, and any individuals or entities identified as additional insureds in the Supplementary Conditions;

2. include coverage for the respective officers, directors, members, partners, employees, and consultants of all such additional insureds;

3. afford primary coverage to these additional insureds for all claims covered thereby (including as applicable those arising from both ongoing and completed operations);

4. not seek contribution from insurance maintained by the additional insured; and

Copyright© 2018 National Society of Professional Engineers, American Council of Engineering Companies, and American Society of Civil Engineers. All rights reserved.

5. as to commercial general liability insurance, apply to additional insureds with respect to liability caused in whole or in part by Contractor's acts or omissions, or the acts and omissions of those working on Contractor's behalf, in the performance of Contractor's operations.

6.04 *Builder's Risk and Other Property Insurance*

A. *Builder's Risk*: Unless otherwise provided in the Supplementary Conditions, Contractor shall purchase and maintain builder's risk insurance upon the Work on a completed value basis, in the amount of the Work's full insurable replacement cost (subject to such deductible amounts as may be provided in the Supplementary Conditions or required by Laws and Regulations). The specific requirements applicable to the builder's risk insurance are set forth in the Supplementary Conditions.

B. *Property Insurance for Facilities of Owner Where Work Will Occur*: ~~Owner~~ Contractor is responsible for obtaining and maintaining property insurance covering each existing structure, building, or facility in which any part of the Work will occur, or to which any part of the Work will attach or be adjoined. Such property insurance will be written on a special perils (all-risk) form, on a replacement cost basis, providing coverage consistent with that required for the builder's risk insurance, and will be maintained until the Work is complete, as set forth in Paragraph 15.06.D. Such policy shall identify both Contractor and Owner as additional insureds. Contractor shall be solely responsible for any deductible.

C. *Property Insurance for Substantially Complete Facilities*: Promptly after Substantial Completion, and before actual occupancy or use of the substantially completed Work, Contractor~~Owner~~ will obtain property insurance for such substantially completed Work, and maintain such property insurance at least until the Work is complete, as set forth in Paragraph 15.06.D. Such property insurance will be written on a special perils (all-risk) form, on a replacement cost basis, and provide coverage consistent with that required for the builder's risk insurance. The builder's risk insurance may terminate upon written confirmation of ~~Owner's~~ Contractor's procurement of such property insurance.

D. *Partial Occupancy or Use by Owner*: If Owner will occupy or use a portion or portions of the Work prior to Substantial Completion of all the Work, as provided in Paragraph 15.04, then Owner ~~(directly, if it is the purchaser of the builder's risk policy, or~~ through Contractor~~)~~ will provide advance notice of such occupancy or use to the builder's risk or all-risk insurer, and Contractor shall obtain an occupancy or use endorsement consenting to the continuation of coverage prior to Owner commencing such partial occupancy or use.

E. *Insurance of Other Property; Additional Insurance*: If the express insurance provisions of the Contract do not require or address the insurance of a property item or interest, then the entity or individual owning such property item will be responsible for insuring it. If Contractor elects to obtain other special insurance to be included in or supplement the builder's risk or property insurance policies provided under this Paragraph 6.04, it may do so at Contractor's expense.

6.05 *Property Losses; Subrogation*

A. The builder's risk insurance policy purchased and maintained in accordance with Paragraph 6.04 (or an installation floater policy if authorized by the Supplementary Conditions), will contain provisions to the effect that in the event of payment of any loss or

Copyright© 2018 National Society of Professional Engineers, American Council of Engineering Companies, and American Society of Civil Engineers. All rights reserved.

damage the insurer will have no rights of recovery against any insureds thereunder, or against Engineer or its consultants, or their officers, directors, members, partners, employees, agents, consultants, or subcontractors.

1. Owner and Contractor waive all rights against each other and the respective officers, directors, members, partners, employees, agents, consultants, and subcontractors of each and any of them, for all losses and damages caused by, arising out of, or resulting from any of the perils, risks, or causes of loss covered by such policies and any other property insurance applicable to the Work; and, in addition, waive all such rights against Engineer, its consultants, all individuals or entities identified in the Supplementary Conditions as builder's risk or installation floater insureds, and the officers, directors, members, partners, employees, agents, consultants, and subcontractors of each and any of them, under such policies for losses and damages so caused.

2. None of the above waivers extends to the rights that any party making such waiver may have to the proceeds of insurance held by ~~Owner or~~ Contractor as trustee or fiduciary, or otherwise payable under any policy so issued.

B. Deleted in its entirety.~~Any property insurance policy maintained by Owner covering any loss, damage, or consequential loss to Owner's existing structures, buildings, or facilities in which any part of the Work will occur, or to which any part of the Work will attach or adjoin; to adjacent structures, buildings, or facilities of Owner; or to part or all of the completed or substantially completed Work, during partial occupancy or use pursuant to Paragraph 15.04, after Substantial Completion pursuant to Paragraph 15.03, or after final payment pursuant to Paragraph 15.06, will contain provisions to the effect that in the event of payment of any loss or damage the insurer will have no rights of recovery against any insureds thereunder, or against Contractor, Subcontractors, or Engineer, or the officers, directors, members, partners, employees, agents, consultants, or subcontractors of each and any of them, and that the insured is allowed to waive the insurer's rights of subrogation in a written contract executed prior to the loss, damage, or consequential loss.~~

1. Deleted in its entirety.~~Owner waives all rights against Contractor, Subcontractors, and Engineer, and the officers, directors, members, partners, employees, agents, consultants and subcontractors of each and any of them, for all losses and damages caused by, arising out of, or resulting from fire or any of the perils, risks, or causes of loss covered by such policies.~~

C. Deleted in its entirety.~~The waivers in this Paragraph 6.05 include the waiver of rights due to business interruption, loss of use, or other consequential loss extending beyond direct physical loss or damage to Owner's property or the Work caused by, arising out of, or resulting from fire or other insured peril, risk, or cause of loss.~~

D. Contractor shall be responsible for assuring that each Subcontract contains provisions whereby the Subcontractor waives all rights against Owner, Contractor, all individuals or entities identified in the Supplementary Conditions as insureds, the Engineer and its consultants, and the officers, directors, members, partners, employees, agents, consultants, and subcontractors of each and any of them, for all losses and damages caused by, arising out of, relating to, or resulting from fire or other peril, risk, or cause of loss covered by builder's risk insurance, installation floater, and any other property insurance applicable to the Work.

Copyright© 2018 National Society of Professional Engineers, American Council of Engineering Companies, and American Society of Civil Engineers. All rights reserved.

6.06 *Receipt and Application of Property Insurance Proceeds*

A. Any insured loss under the builder's risk and other policies of property insurance required by Paragraph 6.04 will be adjusted and settled with the named insured that purchased the policy. Such named insured shall act as fiduciary for the other insureds, and give notice to such other insureds that adjustment and settlement of a claim is in progress. Any other insured may state its position regarding a claim for insured loss in writing within 15 days after notice of such claim.

B. Proceeds for such insured losses may be made payable by the insurer either jointly to multiple insureds, or to the named insured that purchased the policy in its own right and as fiduciary for other insureds, subject to the requirements of any applicable mortgage clause. A named insured receiving insurance proceeds under the builder's risk and other policies of insurance required by Paragraph 6.04 shall maintain such proceeds in a segregated account, and distribute such proceeds in accordance with such agreement as the parties in interest may reach, or as otherwise required under the dispute resolution provisions of this Contract or applicable Laws and Regulations.

C. If no other special agreement is reached, Contractor shall repair or replace the damaged Work, using allocated insurance proceeds.

D. Owner, at its sole discretion, may elect to fund the costs associated with any property insurance claim, ~~exclsuing~~excluding the deductible, and seek reimbursement from Contractor's policy that identifies both Contractor and Owner as named insureds. If Owner exercises this right, it shall have sole authority to settle and adjust any claim and receive reimbursement under the policy with the proceeds made payable to ~~o~~Owner. Contractor shall have the obligation to cooperate and comply with all terms and provisions of the policy and its failure to do so shall ~~constitue~~constitute a material breach of the Contract. If O~~o~~wner does not elect this right, Contractor shall be required to fund the costs associated with any property insurance claim and seek reimbursement under the policy.

E. In the event of any conflict between this Paragraph 6.06 and the specific insurance requirements of Contractor set forth in the Supplemental Conditions, the specific insurance requirements in the Supplemental Conditions shall govern.

ARTICLE 7—CONTRACTOR'S RESPONSIBILITIES

7.01 *Contractor's Means and Methods of Construction*

A. Contractor shall be solely responsible for the means, methods, techniques, sequences, and procedures of construction.

B. If the Contract Documents note, or Contractor determines, that professional engineering or other design services are needed to carry out Contractor's responsibilities for construction means, methods, techniques, sequences, and procedures, or for Site safety, then Contractor shall cause such services to be provided by a properly licensed design professional, at Contractor's expense. Such services are not Owner-delegated professional design services under this Contract, and neither Owner nor Engineer has any responsibility with respect to (1) Contractor's determination of the need for such services, (2) the qualifications or licensing

Copyright© 2018 National Society of Professional Engineers, American Council of Engineering Companies, and American Society of Civil Engineers. All rights reserved.

of the design professionals retained or employed by Contractor, (3) the performance of such services, or (4) any errors, omissions, or defects in such services.

7.02 *Supervision and Superintendence*

A. Contractor shall supervise, inspect, and direct the Work competently and efficiently, devoting such attention thereto and applying such skills and expertise as may be necessary to perform the Work in accordance with the Contract Documents.

B. At all times during the progress of the Work, Contractor shall assign a competent resident superintendent who will not be replaced without written notice to Owner and Engineer except under extraordinary circumstances.

7.03 *Labor; Working Hours*

A. Contractor shall provide competent, suitably qualified personnel to survey and lay out the Work and perform construction as required by the Contract Documents. Contractor shall maintain good discipline and order at the Site.

B. Contractor shall be fully responsible to Owner and Engineer for all acts and omissions of Contractor's employees; of Suppliers and Subcontractors, and their employees; and of any other individuals or entities performing or furnishing any of the Work, just as Contractor is responsible for Contractor's own acts and omissions. The Contractor agrees to remove from the Project an employee, Subcontractor, or Subcontractor employee that commits any breach of the Contract Documents or any breach of the Owner's written rules and regulations regarding ~~the~~ jobsite conduct.

C. The Contractor shall enforce strict discipline and good order among the Contractor's employees and other persons ~~canying~~carrying out the Work. Contractor shall not permit employment of unfit persons or persons not properly skilled in tasks assigned to them. The Contractor shall require all construction personnel to maintain a neat general appearance at all times. Shirts, trousers and proper shoes are required apparel. The display of vulgar words, signs or figures is prohibited. Sandals and flip-flops are prohibited on the Project site. The use of radios, tape players, CD players, boom boxes, sound producing devices and the like are prohibited on the Project site. The Contractor shall not be permitted to use restrooms or other ~~sanitaiy~~sanitary facilities within the Owner's existing buildings or on-site facilities.

D. Except as otherwise required for the safety or protection of persons or the Work or property at the Site or adjacent thereto, and except as otherwise stated in the Contract Documents, all Work at the Site will be performed during regular working hours, Monday through Friday. Contractor will not perform Work on a Saturday, Sunday, or any legal holiday. Contractor may perform Work outside regular working hours or on Saturdays, Sundays, or legal holidays only with Owner's written consent, which will not be unreasonably withheld.

7.04 *Services, Materials, and Equipment*

A. Unless otherwise specified in the Contract Documents, Contractor shall provide and assume full responsibility for all services, materials, equipment, labor, transportation, construction equipment and machinery, tools, appliances, fuel, power, light, heat, telephone, water, sanitary facilities, temporary facilities, and all other facilities and incidentals necessary for the

Copyright© 2018 National Society of Professional Engineers, American Council of Engineering Companies, and American Society of Civil Engineers. All rights reserved.

performance, testing, start up, and completion of the Work, whether or not such items are specifically called for in the Contract Documents.

B. All materials and equipment incorporated into the Work must be new and of good quality, except as otherwise provided in the Contract Documents. All special warranties and guarantees required by the Specifications will expressly run to the benefit of Owner. If required by Engineer, Contractor shall furnish satisfactory evidence (including reports of required tests) as to the source, kind, and quality of materials and equipment.

C. All materials and equipment must be stored, applied, installed, connected, erected, protected, used, cleaned, and conditioned in accordance with instructions of the applicable Supplier, except as otherwise may be provided in the Contract Documents.

7.05 *"Or Equals"*

A. *Contractor's Request; Governing Criteria*: Whenever an item of equipment or material is specified or described in the Contract Documents by using the names of one or more proprietary items or specific Suppliers, the Contract Price has been based upon Contractor furnishing such item as specified. The specification or description of such an item is intended to establish the type, function, appearance, and quality required. Unless the specification or description contains or is followed by words reading that no like, equivalent, or "or equal" item is permitted, Contractor may request that Engineer authorize the use of other items of equipment or material, or items from other proposed Suppliers, under the circumstances described below.

1. If Engineer in its sole discretion determines that an item of equipment or material proposed by Contractor is functionally equal to that named and sufficiently similar so that no change in related Work will be required, Engineer will deem it an "or equal" item. For the purposes of this paragraph, a proposed item of equipment or material will be considered functionally equal to an item so named if:

    a. in the exercise of reasonable judgment Engineer determines that the proposed item:

        1) is at least equal in materials of construction, quality, durability, appearance, strength, and design characteristics;

        2) will reliably perform at least equally well the function and achieve the results imposed by the design concept of the completed Project as a functioning whole;

        3) has a proven record of performance and availability of responsive service; and

        4) is not objectionable to Owner.

    b. Contractor certifies that, if the proposed item is approved and incorporated into the Work:

        1) there will be no increase in cost to the Owner or increase in Contract Times; and

        2) the item will conform substantially to the detailed requirements of the item named in the Contract Documents.

B. *Contractor's Expense*: Contractor shall provide all data in support of any proposed "or equal" item at Contractor's expense.

Copyright© 2018 National Society of Professional Engineers, American Council of Engineering Companies, and American Society of Civil Engineers. All rights reserved.

C. *Engineer's Evaluation and Determination*: Engineer will be allowed a reasonable time to evaluate each "or-equal" request. Engineer may require Contractor to furnish additional data about the proposed "or-equal" item. Engineer will be the sole judge of acceptability. No "or-equal" item will be ordered, furnished, installed, or utilized until Engineer's review is complete and Engineer determines that the proposed item is an "or-equal," which will be evidenced by an approved Shop Drawing or other written communication. Engineer will advise Contractor in writing of any negative determination.

D. *Effect of Engineer's Determination*: Neither approval nor denial of an "or-equal" request will result in any change in Contract Price. The Engineer's denial of an "or-equal" request will be final and binding, and may not be reversed through an appeal under any provision of the Contract.

E. *Treatment as a Substitution Request*: If Engineer determines that an item of equipment or material proposed by Contractor does not qualify as an "or-equal" item, Contractor may request that Engineer consider the item a proposed substitute pursuant to Paragraph 7.06.

7.06 *Substitutes*

A. *Contractor's Request; Governing Criteria*: Unless the specification or description of an item of equipment or material required to be furnished under the Contract Documents contains or is followed by words reading that no substitution is permitted, Contractor may request that Engineer authorize the use of other items of equipment or material under the circumstances described below. To the extent possible such requests must be made before commencement of related construction at the Site.

1. Contractor shall submit sufficient information as provided below to allow Engineer to determine if the item of material or equipment proposed is functionally equivalent to that named and an acceptable substitute therefor. Engineer will not accept requests for review of proposed substitute items of equipment or material from anyone other than Contractor.

2. The requirements for review by Engineer will be as set forth in Paragraph 7.06.B, as supplemented by the Specifications, and as Engineer may decide is appropriate under the circumstances.

3. Contractor shall make written application to Engineer for review of a proposed substitute item of equipment or material that Contractor seeks to furnish or use. The application:

   a. will certify that the proposed substitute item will:

      1) perform adequately the functions and achieve the results called for by the general design;

      2) be similar in substance to the item specified; and

      3) be suited to the same use as the item specified.

   b. will state:

      1) the extent, if any, to which the use of the proposed substitute item will necessitate a change in Contract Times;

Copyright© 2018 National Society of Professional Engineers, American Council of Engineering Companies, and American Society of Civil Engineers. All rights reserved.

2) whether use of the proposed substitute item in the Work will require a change in any of the Contract Documents (or in the provisions of any other direct contract with Owner for other work on the Project) to adapt the design to the proposed substitute item; and

3) whether incorporation or use of the proposed substitute item in connection with the Work is subject to payment of any license fee or royalty.

c. will identify:

1) all variations of the proposed substitute item from the item specified; and

2) available engineering, sales, maintenance, repair, and replacement services.

d. will contain an itemized estimate of all costs or credits that will result directly or indirectly from use of such substitute item, including but not limited to changes in Contract Price, shared savings, costs of redesign, and claims of other contractors affected by any resulting change.

B. *Engineer's Evaluation and Determination*: Engineer will be allowed a reasonable time to evaluate each substitute request, and to obtain comments and direction from Owner. Engineer may require Contractor to furnish additional data about the proposed substitute item. Engineer will be the sole judge of acceptability. No substitute will be ordered, furnished, installed, or utilized until Engineer's review is complete and Engineer determines that the proposed item is an acceptable substitute. Engineer's determination will be evidenced by a Field Order or a proposed Change Order accounting for the substitution itself and all related impacts, including changes in Contract Price or Contract Times. Engineer will advise Contractor in writing of any negative determination.

C. *Special Guarantee*: Owner may require Contractor to furnish at Contractor's expense a special performance guarantee or other surety with respect to any substitute.

D. *Reimbursement of Engineer's Cost*: Engineer will record Engineer's costs in evaluating a substitute proposed or submitted by Contractor. Whether or not Engineer approves a substitute so proposed or submitted by Contractor, Contractor shall reimburse Owner for the reasonable charges of Engineer for evaluating each such proposed substitute. Contractor shall also reimburse Owner for the reasonable charges of Engineer for making changes in the Contract Documents (or in the provisions of any other direct contract with Owner) resulting from the acceptance of each proposed substitute.

E. *Contractor's Expense*: Contractor shall provide all data in support of any proposed substitute at Contractor's expense.

F. *Effect of Engineer's Determination*: If Engineer approves the substitution request, Contractor shall execute the proposed Change Order and proceed with the substitution. The Engineer's denial of a substitution request will be final and binding, and may not be reversed through an appeal under any provision of the Contract. Contractor may challenge the scope of reimbursement costs imposed under Paragraph 7.06.D, by timely submittal of a Change Proposal.

Copyright© 2018 National Society of Professional Engineers, American Council of Engineering Companies, and American Society of Civil Engineers. All rights reserved.

7.07 *Concerning Subcontractors and Suppliers*

A. Contractor may retain Subcontractors and Suppliers for the performance of parts of the Work. Such Subcontractors and Suppliers must be acceptable to Owner. The Contractor's retention of a Subcontractor or Supplier for the performance of parts of the Work will not relieve Contractor's obligation to Owner to perform and complete the Work in accordance with the Contract Documents.

B. Contractor shall retain specific Subcontractors and Suppliers for the performance of designated parts of the Work if required by the Contract to do so.

C. Subsequent to the submittal of Contractor's Bid or final negotiation of the terms of the Contract, Owner may not require Contractor to retain any Subcontractor or Supplier to furnish or perform any of the Work against which Contractor has reasonable objection.

D. Prior to entry into any binding subcontract or purchase order, Contractor shall submit to Owner the identity of the proposed Subcontractor or Supplier (unless Owner has already deemed such proposed Subcontractor or Supplier acceptable during the bidding process or otherwise). Such proposed Subcontractor or Supplier shall be deemed acceptable to Owner unless Owner raises a substantive, reasonable objection within 5 days.

E. Owner may require the replacement of any Subcontractor or Supplier. Owner also may require Contractor to retain specific replacements; provided, however, that Owner may not require a replacement to which Contractor has a reasonable objection. If Contractor has submitted the identity of certain Subcontractors or Suppliers for acceptance by Owner, and Owner has accepted it (either in writing or by failing to make written objection thereto), then Owner may subsequently revoke the acceptance of any such Subcontractor or Supplier so identified solely on the basis of substantive, reasonable objection after due investigation. Contractor shall submit an acceptable replacement for the rejected Subcontractor or Supplier.

F. If Owner requires the replacement of any Subcontractor or Supplier retained by Contractor to perform any part of the Work, then Contractor shall be entitled to an adjustment in Contract Price or Contract Times, with respect to the replacement; and Contractor shall initiate a Change Proposal for such adjustment within 30 days of Owner's requirement of replacement.

G. No acceptance by Owner of any such Subcontractor or Supplier, whether initially or as a replacement, will constitute a waiver of the right of Owner to the completion of the Work in accordance with the Contract Documents.

H. On a monthly basis, Contractor shall submit to Engineer a complete list of all Subcontractors and Suppliers having a direct contract with Contractor, and of all other Subcontractors and Suppliers known to Contractor at the time of submittal.

I. Contractor shall be solely responsible for scheduling and coordinating the work of Subcontractors and Suppliers.

J. The divisions and sections of the Specifications and the identifications of any Drawings do not control Contractor in dividing the Work among Subcontractors or Suppliers, or in delineating the Work to be performed by any specific trade.

Copyright© 2018 National Society of Professional Engineers, American Council of Engineering Companies, and American Society of Civil Engineers. All rights reserved.

K. All Work performed for Contractor by a Subcontractor or Supplier must be pursuant to an appropriate contractual agreement that specifically binds the Subcontractor or Supplier to the applicable terms and conditions of the Contract for the benefit of Owner and Engineer.

L. Owner may furnish to any Subcontractor or Supplier, to the extent practicable, information about amounts paid to Contractor for Work performed for Contractor by the Subcontractor or Supplier.

M. Contractor shall restrict all Subcontractors and Suppliers from communicating with Engineer or Owner, except through Contractor or in case of an emergency, or as otherwise expressly allowed in this Contract.

7.08 *Patent Fees and Royalties*

A. Contractor shall pay all license fees and royalties and assume all costs incident to the use in the performance of the Work or the incorporation in the Work of any invention, design, process, product, or device which is the subject of patent rights or copyrights held by others. If an invention, design, process, product, or device is specified in the Contract Documents for use in the performance of the Work and if, to the actual knowledge of Owner or Engineer, its use is subject to patent rights or copyrights calling for the payment of any license fee or royalty to others, the existence of such rights will be disclosed in the Contract Documents.

B. Deleted in its entirety.~~To the fullest extent permitted by Laws and Regulations, Owner shall indemnify and hold harmless Contractor, and its officers, directors, members, partners, employees, agents, consultants, and subcontractors, from and against all claims, costs, losses, and damages (including but not limited to all fees and charges of engineers, architects, attorneys, and other professionals, and all court or arbitration or other dispute resolution costs) arising out of or relating to any infringement of patent rights or copyrights incident to the use in the performance of the Work or resulting from the incorporation in the Work of any invention, design, process, product, or device specified in the Contract Documents, but not identified as being subject to payment of any license fee or royalty to others required by patent rights or copyrights.~~

C. Deleted in its entirety.~~To the fullest extent permitted by Laws and Regulations, Contractor shall indemnify and hold harmless Owner and Engineer, and the officers, directors, members, partners, employees, agents, consultants and subcontractors of each and any of them, from and against all claims, costs, losses, and damages (including but not limited to all fees and charges of engineers, architects, attorneys, and other professionals and all court or arbitration or other dispute resolution costs) arising out of or relating to any infringement of patent rights or copyrights incident to the use in the performance of the Work or resulting from the incorporation in the Work of any invention, design, process, product, or device not specified in the Contract Documents.~~

7.09 *Permits*

A. Unless otherwise provided in the Contract Documents, Contractor shall obtain and pay for all construction permits, licenses, and certificates of occupancy. Owner shall assist Contractor, when necessary, in obtaining such permits and licenses. Contractor shall pay all governmental charges and inspection fees necessary for the prosecution of the Work which are applicable at the time of the submission of Contractor's Bid (or when Contractor became bound under a

Copyright© 2018 National Society of Professional Engineers, American Council of Engineering Companies, and American Society of Civil Engineers. All rights reserved.

negotiated contract). Owner shall pay all charges of utility owners for connections for providing permanent service to the Work.

7.10 *Taxes*

A. Contractor shall pay all sales, consumer, use, and other similar taxes required to be paid by Contractor in accordance with the Laws and Regulations of the place of the Project which are applicable during the performance of the Work.

7.11 *Laws and Regulations*

A. Contractor shall give all notices required by and shall comply with all Laws and Regulations applicable to the performance of the Work. Neither Owner nor Engineer shall be responsible for monitoring Contractor's compliance with any Laws or Regulations.

B. If Contractor performs any Work or takes any other action knowing or having reason to know that it is contrary to Laws or Regulations, Contractor shall bear all resulting costs and losses, and shall indemnify and hold harmless Owner and Engineer, and the officers, directors, members, partners, employees, agents, consultants, and subcontractors of each and any of them, from and against all claims, costs, losses, and damages (including but not limited to all fees and charges of engineers, architects, attorneys, and other professionals and all court or arbitration or other dispute resolution costs) arising out of or relating to such Work or other action. It is not Contractor's responsibility to make certain that the Work described in the Contract Documents is in accordance with Laws and Regulations, but this does not relieve Contractor of its obligations under Paragraph 3.03.

C. Owner or Contractor may give written notice to the other party of any changes after the submission of Contractor's Bid (or after the date when Contractor became bound under a negotiated contract) in Laws or Regulations having an effect on the cost or time of performance of the Work, including but not limited to changes in Laws or Regulations having an effect on procuring permits and on sales, use, value-added, consumption, and other similar taxes. If Owner and Contractor are unable to agree on entitlement to or on the amount or extent, if any, of any adjustment in Contract Price or Contract Times resulting from such changes, then within 30 days of such written notice Contractor may submit a Change Proposal, or Owner may initiate a Claim.

7.12 *Record Documents*

A. Contractor shall maintain in a safe place at the Site one printed record copy of all Drawings, Specifications, Addenda, Change Orders, Work Change Directives, Field Orders, written interpretations and clarifications, and approved Shop Drawings. Contractor shall keep such record documents in good order and annotate them to show changes made during construction. These record documents, together with all approved Samples, will be available to Engineer for reference. Upon completion of the Work, Contractor shall deliver these record documents to Engineer.

7.13 *Safety and Protection*

A. Contractor shall be solely responsible for initiating, maintaining, and supervising all safety precautions and programs in connection with the Work. Such responsibility does not relieve

Copyright© 2018 National Society of Professional Engineers, American Council of Engineering Companies, and American Society of Civil Engineers. All rights reserved.

Subcontractors of their responsibility for the safety of persons or property in the performance of their work, nor for compliance with applicable safety Laws and Regulations.

B. Contractor shall designate a qualified and experienced safety representative whose duties and responsibilities are the prevention of Work-related accidents and the maintenance and supervision of safety precautions and programs.

C. Contractor shall take all necessary precautions for the safety of, and shall provide the necessary protection to prevent damage, injury, or loss to:

1. all persons on the Site or who may be affected by the Work;

2. all the Work and materials and equipment to be incorporated therein, whether in storage on or off the Site; and

3. other property at the Site or adjacent thereto, including trees, shrubs, lawns, walks, pavements, roadways, structures, other work in progress, utilities, and Underground Facilities not designated for removal, relocation, or replacement in the course of construction.

D. All damage, injury, or loss to any property referred to in Paragraph 7.13.C.2 or 7.13.C.3 caused, directly or indirectly, in whole or in part, by Contractor, any Subcontractor, Supplier, or any other individual or entity directly or indirectly employed by any of them to perform any of the Work, or anyone for whose acts any of them may be liable, shall be remedied by Contractor at its expense (except damage or loss attributable to the fault of Drawings or Specifications or to the acts or omissions of Owner or Engineer or anyone employed by any of them, or anyone for whose acts any of them may be liable, and not attributable, directly or indirectly, in whole or in part, to the fault or negligence of Contractor or any Subcontractor, Supplier, or other individual or entity directly or indirectly employed by any of them).

E. Contractor shall comply with all applicable Laws and Regulations relating to the safety of persons or property, or to the protection of persons or property from damage, injury, or loss; and shall erect and maintain all necessary safeguards for such safety and protection.

F. Contractor shall notify Owner; the owners of adjacent property; the owners of Underground Facilities and other utilities (if the identity of such owners is known to Contractor); and other contractors and utility owners performing work at or adjacent to the Site, in writing, when Contractor knows that prosecution of the Work may affect them, and shall cooperate with them in the protection, removal, relocation, and replacement of their property or work in progress.

G. Contractor shall comply with the applicable requirements of Owner's safety programs, if any. Any Owner's safety programs that are applicable to the Work are identified or included in the Supplementary Conditions or Specifications.

H. Contractor shall inform Owner and Engineer of the specific requirements of Contractor's safety program with which Owner's and Engineer's employees and representatives must comply while at the Site.

I. Contractor's duties and responsibilities for safety and protection will continue until all the Work is completed, Engineer has issued a written notice to Owner and Contractor in

Copyright© 2018 National Society of Professional Engineers, American Council of Engineering Companies, and American Society of Civil Engineers. All rights reserved.

accordance with Paragraph 15.06.C that the Work is acceptable, and Contractor has left the Site (except as otherwise expressly provided in connection with Substantial Completion).

J. Contractor's duties and responsibilities for safety and protection will resume whenever Contractor or any Subcontractor or Supplier returns to the Site to fulfill warranty or correction obligations, or to conduct other tasks arising from the Contract Documents.

7.14 *Hazard Communication Programs*

A. Contractor shall be responsible for coordinating any exchange of safety data sheets (formerly known as material safety data sheets) or other hazard communication information required to be made available to or exchanged between or among employers at the Site in accordance with Laws or Regulations.

7.15 *Emergencies*

A. In emergencies affecting the safety or protection of persons or the Work or property at the Site or adjacent thereto, Contractor is obligated to act to prevent damage, injury, or loss. Contractor shall give Engineer prompt written notice if Contractor believes that any significant changes in the Work or variations from the Contract Documents have been caused by an emergency, or are required as a result of Contractor's response to an emergency. If Engineer determines that a change in the Contract Documents is required because of an emergency or Contractor's response, a Work Change Directive or Change Order will be issued.

7.16 *Submittals*

A. *Shop Drawing and Sample Requirements*

1. Before submitting a Shop Drawing or Sample, Contractor shall:

a. review and coordinate the Shop Drawing or Sample with other Shop Drawings and Samples and with the requirements of the Work and the Contract Documents;

b. determine and verify:

1) all field measurements, quantities, dimensions, specified performance and design criteria, installation requirements, materials, catalog numbers, and similar information with respect to the Submittal;

2) the suitability of all materials and equipment offered with respect to the indicated application, fabrication, shipping, handling, storage, assembly, and installation pertaining to the performance of the Work; and

3) all information relative to Contractor's responsibilities for means, methods, techniques, sequences, and procedures of construction, and safety precautions and programs incident thereto;

c. confirm that the Submittal is complete with respect to all related data included in the Submittal.

2. Each Shop Drawing or Sample must bear a stamp or specific written certification that Contractor has satisfied Contractor's obligations under the Contract Documents with respect to Contractor's review of that Submittal, and that Contractor approves the Submittal.

Copyright© 2018 National Society of Professional Engineers, American Council of Engineering Companies, and American Society of Civil Engineers. All rights reserved.

3. With each Shop Drawing or Sample, Contractor shall give Engineer specific written notice of any variations that the Submittal may have from the requirements of the Contract Documents. This notice must be set forth in a written communication separate from the Submittal; and, in addition, in the case of a Shop Drawing by a specific notation made on the Shop Drawing itself.

B. *Submittal Procedures for Shop Drawings and Samples*: Contractor shall label and submit Shop Drawings and Samples to Engineer for review and approval in accordance with the accepted Schedule of Submittals.

1. *Shop Drawings*

a. Contractor shall submit the number of copies required in the Specifications.

b. Data shown on the Shop Drawings must be complete with respect to quantities, dimensions, specified performance and design criteria, materials, and similar data to show Engineer the services, materials, and equipment Contractor proposes to provide, and to enable Engineer to review the information for the limited purposes required by Paragraph 7.16.C.

2. *Samples*

a. Contractor shall submit the number of Samples required in the Specifications.

b. Contractor shall clearly identify each Sample as to material, Supplier, pertinent data such as catalog numbers, the use for which intended and other data as Engineer may require to enable Engineer to review the Submittal for the limited purposes required by Paragraph 7.16.C.

3. Where a Shop Drawing or Sample is required by the Contract Documents or the Schedule of Submittals, any related Work performed prior to Engineer's review and approval of the pertinent submittal will be at the sole expense and responsibility of Contractor.

C. *Engineer's Review of Shop Drawings and Samples*

1. Engineer will provide timely review of Shop Drawings and Samples in accordance with the accepted Schedule of Submittals. Engineer's review and approval will be only to determine if the items covered by the Submittals will, after installation or incorporation in the Work, comply with the requirements of the Contract Documents, and be compatible with the design concept of the completed Project as a functioning whole as indicated by the Contract Documents.

2. Engineer's review and approval will not extend to means, methods, techniques, sequences, or procedures of construction, or to safety precautions or programs incident thereto.

3. Engineer's review and approval of a separate item as such will not indicate approval of the assembly in which the item functions.

4. Engineer's review and approval of a Shop Drawing or Sample will not relieve Contractor from responsibility for any variation from the requirements of the Contract Documents unless Contractor has complied with the requirements of Paragraph 7.16.A.3 and Engineer has given written approval of each such variation by specific written notation

Copyright© 2018 National Society of Professional Engineers, American Council of Engineering Companies, and American Society of Civil Engineers. All rights reserved.

thereof incorporated in or accompanying the Shop Drawing or Sample. Engineer will document any such approved variation from the requirements of the Contract Documents in a Field Order or other appropriate Contract modification.

5. Engineer's review and approval of a Shop Drawing or Sample will not relieve Contractor from responsibility for complying with the requirements of Paragraphs 7.16.A and B.

6. Engineer's review and approval of a Shop Drawing or Sample, or of a variation from the requirements of the Contract Documents, will not, under any circumstances, change the Contract Times or Contract Price, unless such changes are included in a Change Order.

7. Neither Engineer's receipt, review, acceptance, or approval of a Shop Drawing or Sample will result in such item becoming a Contract Document.

8. Contractor shall perform the Work in compliance with the requirements and commitments set forth in approved Shop Drawings and Samples, subject to the provisions of Paragraph 7.16.C.4.

D. *Resubmittal Procedures for Shop Drawings and Samples*

1. Contractor shall make corrections required by Engineer and shall return the required number of corrected copies of Shop Drawings and submit, as required, new Samples for review and approval. Contractor shall direct specific attention in writing to revisions other than the corrections called for by Engineer on previous Submittals.

2. Contractor shall furnish required Shop Drawing and Sample submittals with sufficient information and accuracy to obtain required approval of an item with no more than two resubmittals. Engineer will record Engineer's time for reviewing a third or subsequent resubmittal of a Shop Drawing or Sample, and Contractor shall be responsible for Engineer's charges to Owner for such time. Owner may impose a set-off against payments due Contractor to secure reimbursement for such charges.

3. If Contractor requests a change of a previously approved Shop Drawing or Sample, Contractor shall be responsible for Engineer's charges to Owner for its review time, and Owner may impose a set-off against payments due Contractor to secure reimbursement for such charges, unless the need for such change is beyond the control of Contractor.

E. *Submittals Other than Shop Drawings, Samples, and Owner-Delegated Designs*

1. The following provisions apply to all Submittals other than Shop Drawings, Samples, and Owner-delegated designs:

   a. Contractor shall submit all such Submittals to the Engineer in accordance with the Schedule of Submittals and pursuant to the applicable terms of the Contract Documents.

   b. Engineer will provide timely review of all such Submittals in accordance with the Schedule of Submittals and return such Submittals with a notation of either Accepted or Not Accepted. Any such Submittal that is not returned within the time established in the Schedule of Submittals will be deemed accepted.

Copyright© 2018 National Society of Professional Engineers, American Council of Engineering Companies, and American Society of Civil Engineers. All rights reserved.

c. Engineer's review will be only to determine if the Submittal is acceptable under the requirements of the Contract Documents as to general form and content of the Submittal.

d. If any such Submittal is not accepted, Contractor shall confer with Engineer regarding the reason for the non-acceptance, and resubmit an acceptable document.

2. Procedures for the submittal and acceptance of the Progress Schedule, the Schedule of Submittals, and the Schedule of Values are set forth in Paragraphs 2.03. 2.04, and 2.05.

F. Owner-delegated Designs: Submittals pursuant to Owner-delegated designs are governed by the provisions of Paragraph 7.19.

7.17 *Contractor's General Warranty and Guarantee*

A. Contractor warrants and guarantees to Owner that all Work will be in accordance with the Contract Documents and will not be defective. Engineer is entitled to rely on Contractor's warranty and guarantee.

B. Owner's rights under this warranty and guarantee are in addition to, and are not limited by, Owner's rights under the correction period provisions of Paragraph 15.08. The time in which Owner may enforce its warranty and guarantee rights under this Paragraph 7.17 is limited only by applicable Laws and Regulations restricting actions to enforce such rights; provided, however, that after the end of the correction period under Paragraph 15.08:

1. Owner shall give Contractor written notice of any defective Work within 60 days of the discovery that such Work is defective; and

2. Such notice will be deemed the start of an event giving rise to a Claim under Paragraph 12.01.B, such that any related Claim must be brought within 30 days of the notice.

C. Contractor's warranty and guarantee hereunder excludes defects or damage caused by:

1. abuse, or improper modification, maintenance, or operation, by persons other than Contractor, Subcontractors, Suppliers, or any other individual or entity for whom Contractor is responsible; or

2. normal wear and tear under normal usage.

D. Contractor's obligation to perform and complete the Work in accordance with the Contract Documents is absolute. None of the following will constitute an acceptance of Work that is not in accordance with the Contract Documents, a release of Contractor's obligation to perform the Work in accordance with the Contract Documents, or a release of Owner's warranty and guarantee rights under this Paragraph 7.17:

1. Observations by Engineer;

2. Recommendation by Engineer or payment by Owner of any progress or final payment;

3. The issuance of a certificate of Substantial Completion by Engineer or any payment related thereto by Owner;

4. Use or occupancy of the Work or any part thereof by Owner;

Copyright© 2018 National Society of Professional Engineers, American Council of Engineering Companies, and American Society of Civil Engineers. All rights reserved.

5. Any review and approval of a Shop Drawing or Sample submittal;
6. The issuance of a notice of acceptability by Engineer;
7. The end of the correction period established in Paragraph 15.08;
8. Any inspection, test, or approval by others; or
9. Any correction of defective Work by Owner.

E. If the Contract requires the Contractor to accept the assignment of a contract entered into by Owner, then the specific warranties, guarantees, and correction obligations contained in the assigned contract will govern with respect to Contractor's performance obligations to Owner for the Work described in the assigned contract.

7.18 *Indemnification*

A. To the fullest extent permitted by Laws and Regulations, and in addition to any other obligations of Contractor under the Contract or otherwise, Contractor shall indemnify and hold harmless Owner ~~and Engineer~~, and the Owner's officers, ~~directors, members, partners,~~ and employees, ~~agents, consultants and subcontractors of each and any of them,~~ from losses, damages, costs, and judgments (including but not limited to all reasonable fees and charges of engineers, architects, attorneys, and other professionals, and all court or arbitration or other dispute resolution costs) arising from third-party claims or actions relating to or resulting from the performance or furnishing of the Work, provided that any such claim, action, loss, cost, judgment or damage is attributable to bodily injury, sickness, disease, or death, or to damage to or destruction of tangible property (other than the Work itself), including the loss of use resulting therefrom, and caused in whole or in part by any act or omission of the Contractor, any Subcontractor, anyone directly or indirectly employed by any of them or anyone for whose acts any of them may be liable, regardless of whether or not it is caused in part by a party indemnified hereunder. Such obligation shall not be construed to negate, abridge or otherwise reduce any other right or obligation of indemnity which otherwise exists as to any party or person described in this subsection ~~but only to the extent caused by any negligent act or omission of Contractor, any Subcontractor, any Supplier, or any individual or entity directly or indirectly employed by any of them to perform any of the Work, or anyone for whose acts any of them may be liable~~.

B. ~~In any and all claims against Owner or Engineer, or any of their officers, directors, members, partners, employees, agents, consultants, or subcontractors, by any employee (or the survivor or personal representative of such employee) of Contractor, any Subcontractor, any Supplier, or any individual or entity directly or indirectly employed by any of them to perform any of the Work, or anyone for whose acts any of them may be liable, the indemnification obligation under Paragraph 7.18.A will not be limited in any way by any limitation on the amount or type of damages, compensation, or benefits payable by or for Contractor or any such Subcontractor, Supplier, or other individual or entity under workers' compensation acts, disability benefit acts, or other employee benefit acts.~~ The Contractor acknowledges the limit of dollar amount of Contractor's indemnity obligations required by the Contract specifically for those claims caused in whole or in part by the Owner or Engineer shall be $1,000,000 or the Contract Sum of the Project, whichever is more. The parties agree that the indemnity

Copyright© 2018 National Society of Professional Engineers, American Council of Engineering Companies, and American Society of Civil Engineers. All rights reserved.

provided herein bears a reasonable commercial relationship to the Contract and is incorporated by this reference into the Project specifications and bid documents. if any.

C. Notwithstanding the above and without monetary limitation, the Contractor hereby indemnifies and holds harmless the Owner, their officers and employees, from liabilities, damages, losses and costs, including, but not limited to, reasonable attorney's fees, to the extent caused by negligence, recklessness, or intentional wrongful misconduct of the Contractor and persons employed or utilized by the Contractor in the performance of the Contract.

D. Contractor agrees and understands that its obligation to indemnify, hold harmless, and defend as set forth in Paragraphs 7.18.A and B. above includes without limitation, claims, losses, etc., for personal injury, death, property damage, Hazardous Environmental Conditions, infringement of patent rights or copyrights incidental to the use or incorporation in the performance of the Work, etc., to the extent caused by the negligence, recklessness, or intentional misconduct of Contractor and the persons or entities employed or utilized by Contractor in the performance of the Contract.

7.19 *Delegation of Professional Design Services*

A. Owner may require Contractor to provide professional design services for a portion of the Work by express delegation in the Contract Documents. Such delegation will specify the performance and design criteria that such services must satisfy, and the Submittals that Contractor must furnish to Engineer with respect to the Owner-delegated design.

B. Contractor shall cause such Owner-delegated professional design services to be provided pursuant to the professional standard of care by a properly licensed design professional, whose signature and seal must appear on all drawings, calculations, specifications, certifications, and Submittals prepared by such design professional. Such design professional must issue all certifications of design required by Laws and Regulations.

C. If a Shop Drawing or other Submittal related to the Owner-delegated design is prepared by Contractor, a Subcontractor, or others for submittal to Engineer, then such Shop Drawing or other Submittal must bear the written approval of Contractor's design professional when submitted by Contractor to Engineer.

D. Owner and Engineer shall be entitled to rely upon the adequacy, accuracy, and completeness of the services, certifications, and approvals performed or provided by the design professionals retained or employed by Contractor under an Owner-delegated design, subject to the professional standard of care and the performance and design criteria stated in the Contract Documents.

E. Pursuant to this Paragraph 7.19, Engineer's review, approval, and other determinations regarding design drawings, calculations, specifications, certifications, and other Submittals furnished by Contractor pursuant to an Owner-delegated design will be only for the following limited purposes:

1. Checking for conformance with the requirements of this Paragraph 7.19;

Copyright© 2018 National Society of Professional Engineers, American Council of Engineering Companies, and American Society of Civil Engineers. All rights reserved.

2. Confirming that Contractor (through its design professionals) has used the performance and design criteria specified in the Contract Documents; and

3. Establishing that the design furnished by Contractor is consistent with the design concept expressed in the Contract Documents.

F. Contractor shall not be responsible for the adequacy of performance or design criteria specified by Owner or Engineer.

G. Contractor is not required to provide professional services in violation of applicable Laws and Regulations.

ARTICLE 8—OTHER WORK AT THE SITE

8.01 *Other Work*

A. In addition to and apart from the Work under the Contract Documents, the Owner may perform other work at or adjacent to the Site. Such other work may be performed by Owner's employees, or through contracts between the Owner and third parties. Owner may also arrange to have third-party utility owners perform work on their utilities and facilities at or adjacent to the Site.

B. If Owner performs other work at or adjacent to the Site with Owner's employees, or through contracts for such other work, then Owner shall give Contractor written notice thereof prior to starting any such other work. If Owner has advance information regarding the start of any third-party utility work that Owner has arranged to take place at or adjacent to the Site, Owner shall provide such information to Contractor.

C. Contractor shall afford proper and safe access to the Site to each contractor that performs such other work, each utility owner performing other work, and Owner, if Owner is performing other work with Owner's employees, and provide a reasonable opportunity for the introduction and storage of materials and equipment and the execution of such other work.

D. Contractor shall do all cutting, fitting, and patching of the Work that may be required to properly connect or otherwise make its several parts come together and properly integrate with such other work. Contractor shall not endanger any work of others by cutting, excavating, or otherwise altering such work; provided, however, that Contractor may cut or alter others' work with the written consent of Engineer and the others whose work will be affected.

E. If the proper execution or results of any part of Contractor's Work depends upon work performed by others, Contractor shall inspect such other work and promptly report to Engineer in writing any delays, defects, or deficiencies in such other work that render it unavailable or unsuitable for the proper execution and results of Contractor's Work. Contractor's failure to so report will constitute an acceptance of such other work as fit and proper for integration with Contractor's Work except for latent defects and deficiencies in such other work.

F. The provisions of this article are not applicable to work that is performed by third-party utilities or other third-party entities without a contract with Owner, or that is performed

Copyright© 2018 National Society of Professional Engineers, American Council of Engineering Companies, and American Society of Civil Engineers. All rights reserved.

without having been arranged by Owner. If such work occurs, then any related delay, disruption, or interference incurred by Contractor is governed by the provisions of Paragraph 4.05.C.3.

8.02 *Coordination*

A. If Owner intends to contract with others for the performance of other work at or adjacent to the Site, to perform other work at or adjacent to the Site with Owner's employees, or to arrange to have utility owners perform work at or adjacent to the Site, the following will be set forth in the Supplementary Conditions or provided to Contractor prior to the start of any such other work:

1. The identity of the individual or entity that will have authority and responsibility for coordination of the activities among the various contractors;

2. An itemization of the specific matters to be covered by such authority and responsibility; and

3. The extent of such authority and responsibilities.

B. Unless otherwise provided in the Supplementary Conditions, Owner shall have sole authority and responsibility for such coordination.

8.03 *Legal Relationships*

A. If, in the course of performing other work for Owner at or adjacent to the Site, the Owner's employees, any other contractor working for Owner, or any utility owner that Owner has arranged to perform work, causes damage to the Work or to the property of Contractor or its Subcontractors, or delays, disrupts, interferes with, or increases the scope or cost of the performance of the Work, through actions or inaction, then Contractor shall be entitled to an equitable adjustment in the Contract Price or the Contract Times. Contractor must submit any Change Proposal seeking an equitable adjustment in the Contract Price or the Contract Times under this paragraph within 30 days of the damaging, delaying, disrupting, or interfering event. The entitlement to, and extent of, any such equitable adjustment will take into account information (if any) regarding such other work that was provided to Contractor in the Contract Documents prior to the submittal of the Bid or the final negotiation of the terms of the Contract, and any remedies available to Contractor under Laws or Regulations concerning utility action or inaction. When applicable, any such equitable adjustment in Contract Price will be conditioned on Contractor assigning to Owner all Contractor's rights against such other contractor or utility owner with respect to the damage, delay, disruption, or interference that is the subject of the adjustment. Contractor's entitlement to an adjustment of the Contract Times or Contract Price is subject to the provisions of Paragraphs 4.05.D and 4.05.E.

B. Contractor shall take reasonable and customary measures to avoid damaging, delaying, disrupting, or interfering with the work of Owner, any other contractor, or any utility owner performing other work at or adjacent to the Site.

1. If Contractor fails to take such measures and as a result damages, delays, disrupts, or interferes with the work of any such other contractor or utility owner, then Owner may impose a set-off against payments due Contractor, and assign to such other contractor or

Copyright© 2018 National Society of Professional Engineers, American Council of Engineering Companies, and American Society of Civil Engineers. All rights reserved.

utility owner the Owner's contractual rights against Contractor with respect to the breach of the obligations set forth in this Paragraph 8.03.B.

2. When Owner is performing other work at or adjacent to the Site with Owner's employees, Contractor shall be liable to Owner for damage to such other work, and for the reasonable direct delay, disruption, and interference costs incurred by Owner as a result of Contractor's failure to take reasonable and customary measures with respect to Owner's other work. In response to such damage, delay, disruption, or interference, Owner may impose a set-off against payments due Contractor.

C. If Contractor damages, delays, disrupts, or interferes with the work of any other contractor, or any utility owner performing other work at or adjacent to the Site, through Contractor's failure to take reasonable and customary measures to avoid such impacts, or if any claim arising out of Contractor's actions, inactions, or negligence in performance of the Work at or adjacent to the Site is made by any such other contractor or utility owner against Contractor, Owner, or Engineer, then Contractor shall (1) promptly attempt to settle the claim as to all parties through negotiations with such other contractor or utility owner, or otherwise resolve the claim by arbitration or other dispute resolution proceeding or at law, and (2) indemnify and hold harmless Owner and Engineer, and the officers, directors, members, partners, employees, agents, consultants and subcontractors of each and any of them from and against any such claims, and against all costs, losses, and damages (including but not limited to all fees and charges of engineers, architects, attorneys, and other professionals and all court or arbitration or other dispute resolution costs) arising out of or relating to such damage, delay, disruption, or interference.

ARTICLE 9—OWNER'S RESPONSIBILITIES

9.01 *Communications to Contractor*

A. Except as otherwise provided in these General Conditions, Owner shall issue all communications to Contractor through Engineer.

9.02 *Replacement of Engineer*

A. Owner may at its discretion appoint an engineer to replace Engineer, provided Contractor makes no reasonable objection to the replacement engineer. The replacement engineer's status under the Contract Documents will be that of the former Engineer.

9.03 *Furnish Data*

A. Owner shall promptly furnish the data required of Owner under the Contract Documents.

9.04 *Pay When Due*

A. Owner shall make payments to Contractor when they are due as provided in the Agreement.

9.05 *Lands and Easements; Reports, Tests, and Drawings*

A. Owner's duties with respect to providing lands and easements are set forth in Paragraph 5.01.

B. Owner's duties with respect to providing engineering surveys to establish reference points are set forth in Paragraph 4.03.

Copyright© 2018 National Society of Professional Engineers, American Council of Engineering Companies, and American Society of Civil Engineers. All rights reserved.

C. Article 5 refers to Owner's identifying and making available to Contractor copies of reports of explorations and tests of conditions at the Site, and drawings of physical conditions relating to existing surface or subsurface structures at the Site.

9.06 *Insurance*

A. Owner's responsibilities, if any, with respect to purchasing and maintaining liability and property insurance are set forth in Article 6.

9.07 *Change Orders*

A. Owner's responsibilities with respect to Change Orders are set forth in Article 11.

9.08 *Inspections, Tests, and Approvals*

A. Owner's responsibility with respect to certain inspections, tests, and approvals is set forth in Paragraph 14.02.B.

9.09 *Limitations on Owner's Responsibilities*

A. The Owner shall not supervise, direct, or have control or authority over, nor be responsible for, Contractor's means, methods, techniques, sequences, or procedures of construction, or the safety precautions and programs incident thereto, or for any failure of Contractor to comply with Laws and Regulations applicable to the performance of the Work. Owner will not be responsible for Contractor's failure to perform the Work in accordance with the Contract Documents.

9.10 *Undisclosed Hazardous Environmental Condition*

A. Owner's responsibility in respect to an undisclosed Hazardous Environmental Condition is set forth in Paragraph 5.06.

9.11 *Deleted in its entirety.~~Evidence of Financial Arrangements~~*

A. Deleted in its entirety.~~Upon request of Contractor, Owner shall furnish Contractor reasonable evidence that financial arrangements have been made to satisfy Owner's obligations under the Contract (including obligations under proposed changes in the Work).~~N/A

9.12 *Safety Programs*

A. While at the Site, Owner's employees and representatives shall comply with the specific applicable requirements of Contractor's safety programs of which Owner has been informed.

B. Owner shall furnish copies of any applicable Owner safety programs to Contractor.

ARTICLE 10—ENGINEER'S STATUS DURING CONSTRUCTION

10.01 *Owner's Representative*

A. Engineer will be Owner's representative during the construction period. The duties and responsibilities and the limitations of authority of Engineer as Owner's representative during construction are set forth in the Contract.

Copyright© 2018 National Society of Professional Engineers, American Council of Engineering Companies, and American Society of Civil Engineers. All rights reserved.

10.02 *Visits to Site*

A. Engineer will make visits to the Site at intervals appropriate to the various stages of construction as Engineer deems necessary in order to observe, as an experienced and qualified design professional, the progress that has been made and the quality of the various aspects of Contractor's executed Work. Based on information obtained during such visits and observations, Engineer, for the benefit of Owner, will determine, in general, if the Work is proceeding in accordance with the Contract Documents. Engineer will not be required to make exhaustive or continuous inspections on the Site to check the quality or quantity of the Work. Engineer's efforts will be directed toward providing for Owner a greater degree of confidence that the completed Work will conform generally to the Contract Documents. On the basis of such visits and observations, Engineer will keep Owner informed of the progress of the Work and will endeavor to guard Owner against defective Work.

B. Engineer's visits and observations are subject to all the limitations on Engineer's authority and responsibility set forth in Paragraph 10.07. Particularly, but without limitation, during or as a result of Engineer's visits or observations of Contractor's Work, Engineer will not supervise, direct, control, or have authority over or be responsible for Contractor's means, methods, techniques, sequences, or procedures of construction, or the safety precautions and programs incident thereto, or for any failure of Contractor to comply with Laws and Regulations applicable to the performance of the Work.

10.03 *Resident Project Representative*

A. If Owner and Engineer have agreed that Engineer will furnish a Resident Project Representative to represent Engineer at the Site and assist Engineer in observing the progress and quality of the Work, then the authority and responsibilities of any such Resident Project Representative will be as provided in the Supplementary Conditions, and limitations on the responsibilities thereof will be as provided in the Supplementary Conditions and in Paragraph 10.07.

B. If Owner designates an individual or entity who is not Engineer's consultant, agent, or employee to represent Owner at the Site, then the responsibilities and authority of such individual or entity will be as provided in the Supplementary Conditions.

10.04 *Engineer's Authority*

A. Engineer has the authority to reject Work in accordance with Article 14.

B. Engineer's authority as to Submittals is set forth in Paragraph 7.16.

C. Engineer's authority as to design drawings, calculations, specifications, certifications and other Submittals from Contractor in response to Owner's delegation (if any) to Contractor of professional design services, is set forth in Paragraph 7.19.

D. Engineer's authority as to changes in the Work is set forth in Article 11.

E. Engineer's authority as to Applications for Payment is set forth in Article 15.

10.05 *Determinations for Unit Price Work*

A. Engineer will determine the actual quantities and classifications of Unit Price Work performed by Contractor as set forth in Paragraph 13.03.

Copyright© 2018 National Society of Professional Engineers, American Council of Engineering Companies, and American Society of Civil Engineers. All rights reserved.

10.06 *Decisions on Requirements of Contract Documents and Acceptability of Work*

A. Engineer will render decisions regarding the requirements of the Contract Documents, and judge the acceptability of the Work, pursuant to the specific procedures set forth herein for initial interpretations, Change Proposals, and acceptance of the Work. In rendering such decisions and judgments, Engineer will not show partiality to Owner or Contractor, and will not be liable to Owner, Contractor, or others in connection with any proceedings, interpretations, decisions, or judgments conducted or rendered in good faith.

10.07 *Limitations on Engineer's Authority and Responsibilities*

A. Neither Engineer's authority or responsibility under this Article 10 or under any other provision of the Contract, nor any decision made by Engineer in good faith either to exercise or not exercise such authority or responsibility or the undertaking, exercise, or performance of any authority or responsibility by Engineer, will create, impose, or give rise to any duty in contract, tort, or otherwise owed by Engineer to Contractor, any Subcontractor, any Supplier, any other individual or entity, or to any surety for or employee or agent of any of them.

B. Engineer will not supervise, direct, control, or have authority over or be responsible for Contractor's means, methods, techniques, sequences, or procedures of construction, or the safety precautions and programs incident thereto, or for any failure of Contractor to comply with Laws and Regulations applicable to the performance of the Work. Engineer will not be responsible for Contractor's failure to perform the Work in accordance with the Contract Documents.

C. Engineer will not be responsible for the acts or omissions of Contractor or of any Subcontractor, any Supplier, or of any other individual or entity performing any of the Work.

D. Engineer's review of the final Application for Payment and accompanying documentation, and all maintenance and operating instructions, schedules, guarantees, bonds, certificates of inspection, tests and approvals, and other documentation required to be delivered by Contractor under Paragraph 15.06.A, will only be to determine generally that their content complies with the requirements of, and in the case of certificates of inspections, tests, and approvals, that the results certified indicate compliance with the Contract Documents.

E. The limitations upon authority and responsibility set forth in this Paragraph 10.07 also apply to the Resident Project Representative, if any.

10.08 *Compliance with Safety Program*

A. While at the Site, Engineer's employees and representatives will comply with the specific applicable requirements of Owner's and Contractor's safety programs of which Engineer has been informed.

ARTICLE 11—CHANGES TO THE CONTRACT

11.01 *Amending and Supplementing the Contract*

A. The Contract may be amended or supplemented by a Change Order, an Emergency Work Change Directive, or a Field Order.

Copyright© 2018 National Society of Professional Engineers, American Council of Engineering Companies, and American Society of Civil Engineers. All rights reserved.

B. If an amendment or supplement to the Contract includes a change in the Contract Price or the Contract Times, such amendment or supplement must be set forth in a Change Order.

C. All changes to the Contract that involve (1) the performance or acceptability of the Work, (2) the design (as set forth in the Drawings, Specifications, or otherwise), or (3) other engineering or technical matters, must be supported by Engineer's recommendation. Owner and Contractor may amend other terms and conditions of the Contract without the recommendation of the Engineer.

11.02 *Change Orders*

A. Owner and Contractor shall execute appropriate Change Orders covering:

1. Changes in Contract Price or Contract Times which are agreed to by the parties, including any undisputed sum or amount of time for Work actually performed in accordance with an Emergency Work Change Directive;

2. Changes in Contract Price resulting from an Owner set-off, unless Contractor has duly contested such set-off;

3. Changes in the Work which are: (a) ordered by Owner pursuant to Paragraph 11.05, (b) required because of Owner's acceptance of defective Work under Paragraph 14.04 or Owner's correction of defective Work under Paragraph 14.07, or (c) agreed to by the parties, subject to the need for Engineer's recommendation if the change in the Work involves the design (as set forth in the Drawings, Specifications, or otherwise) or other engineering or technical matters; and

4. Changes that embody the substance of any final and binding results under: Paragraph 11.03.B, resolving the impact of an Emergency Work Change Directive; Paragraph 11.09, concerning Change Proposals; Article 12, Claims; Paragraph 13.02.D, final adjustments resulting from allowances; Paragraph 13.03.D, final adjustments relating to determination of quantities for Unit Price Work; and similar provisions.

B. If Owner or Contractor refuses to execute a Change Order that is required to be executed under the terms of Paragraph 11.02.A, it will be deemed to be of full force and effect, as if fully executed.

11.03 Emergency *Work Change Directives*

A. An Emergency Work Change Directive may only be used in emergency situations and will not change the Contract Price or the Contract Times but is evidence that the parties expect that the modification ~~ordered or~~ documented by an Emergency Work Change Directive will be incorporated in a subsequently issued Change Order, following negotiations by the parties as to the Emergency Work Change Directive's effect, if any, on the Contract Price and Contract Times; or, if negotiations are unsuccessful, by a determination under the terms of the Contract Documents governing adjustments, expressly including Paragraph 11.07 regarding change of Contract Price.

Copyright© 2018 National Society of Professional Engineers, American Council of Engineering Companies, and American Society of Civil Engineers. All rights reserved.

B. If Owner has issued a written Emergency Work Change Directive and:

1. Contractor believes that an adjustment in Contract Times or Contract Price is necessary, then Contractor shall submit any Change Proposal seeking such an adjustment no later than 30 days after the completion of the Work set out in the Work Change Directive.

2. Owner believes that an adjustment in Contract Times or Contract Price is necessary, then Owner shall submit ~~any Claim seeking such~~ a Change Order including an adjustment no later than 60 days after issuance of the Work Change Directive.

11.04 *Field Orders*

A. Engineer may authorize minor changes in the Work if the changes do not involve an adjustment in the Contract Price or the Contract Times and are compatible with the design concept of the completed Project as a functioning whole as indicated by the Contract Documents. Such changes will be accomplished by a Field Order and will be binding on Owner and also on Contractor, which shall perform the Work involved promptly.

B. If Contractor believes that a Field Order justifies an adjustment in the Contract Price or Contract Times, then before proceeding with the Work at issue, Contractor shall submit a Change Proposal as provided herein.

11.05 *Owner-Authorized Changes in the Work*

A. Without invalidating the Contract and without notice to any surety, Owner may, at any time or from time to time, order additions, deletions, or revisions in the Work. Changes involving the design (as set forth in the Drawings, Specifications, or otherwise) or other engineering or technical matters will be supported by Engineer's recommendation.

B. Such changes in the Work may be accomplished by a Change Order, if Owner and Contractor have agreed as to the effect, if any, of the changes on Contract Times or Contract Price; or by a Work Change Directive. Upon receipt of any such document, Contractor shall promptly proceed with the Work involved; or, in the case of a deletion in the Work, promptly cease construction activities with respect to such deleted Work. Added or revised Work must be performed under the applicable conditions of the Contract Documents.

C. Nothing in this Paragraph 11.05 obligates Contractor to undertake work that Contractor reasonably concludes cannot be performed in a manner consistent with Contractor's safety obligations under the Contract Documents or Laws and Regulations.

11.06 *Unauthorized Changes in the Work*

A. Contractor shall not be entitled to an increase in the Contract Price or an extension of the Contract Times with respect to any work performed that is not required by the Contract Documents, as amended, modified, or supplemented, except in the case of an emergency as provided in Paragraph 7.15 or in the case of uncovering Work as provided in Paragraph 14.05.C.2.

11.07 *Change of Contract Price*

A. The Contract Price may only be changed by a Change Order. Any Change Proposal for an adjustment in the Contract Price must comply with the provisions of Paragraph 11.09. Any Claim for an adjustment of Contract Price must comply with the provisions of Article 12.

Copyright© 2018 National Society of Professional Engineers, American Council of Engineering Companies, and American Society of Civil Engineers. All rights reserved.

B. An adjustment in the Contract Price will be determined as follows:

1. Where the Work involved is covered by unit prices contained in the Contract Documents, then by application of such unit prices to the quantities of the items involved (subject to the provisions of Paragraph 13.03);

2. Where the Work involved is not covered by unit prices contained in the Contract Documents, then by a mutually agreed lump sum (which may include an allowance for overhead and profit not necessarily in accordance with Paragraph 11.07.C.2); or

3. Where the Work involved is not covered by unit prices contained in the Contract Documents and the parties do not reach mutual agreement to a lump sum, then on the basis of the Cost of the Work (determined as provided in Paragraph 13.01) plus a Contractor's fee for overhead and profit (determined as provided in Paragraph 11.07.C).

C. *Contractor's Fee*: When applicable, the Contractor's fee for overhead and profit will be determined as follows:

1. A mutually acceptable fixed fee; or

2. If a fixed fee is not agreed upon, then a fee based on the following percentages of the various portions of the Cost of the Work:

a. For costs incurred under Paragraphs 13.01.B.1 and 13.01.B.2, the Contractor's fee will be 15 percent;

b. For costs incurred under Paragraph 13.01.B.3, the Contractor's fee will be 5 percent;

c. Where one or more tiers of subcontracts are on the basis of Cost of the Work plus a fee and no fixed fee is agreed upon, the intent of Paragraphs 11.07.C.2.a and 11.07.C.2.b is that the Contractor's fee will be based on: (1) a fee of 15 percent of the costs incurred under Paragraphs 13.01.B.1 and 13.01.B.2 by the Subcontractor that actually performs the Work, at whatever tier, and (2) with respect to Contractor itself and to any Subcontractors of a tier higher than that of the Subcontractor that actually performs the Work, a fee of 5 percent of the amount (fee plus underlying costs incurred) attributable to the next lower tier Subcontractor; provided, however, that for any such subcontracted Work the maximum total fee to be paid by Owner will be no greater than 27 percent of the costs incurred by the Subcontractor that actually performs the Work;

d. No fee will be payable on the basis of costs itemized under Paragraphs 13.01.B.4, 13.01.B.5, and 13.01.C;

e. The amount of credit to be allowed by Contractor to Owner for any change which results in a net decrease in Cost of the Work will be the amount of the actual net decrease in Cost of the Work and a deduction of an additional amount equal to 5 percent of such actual net decrease in Cost of the Work; and

f. When both additions and credits are involved in any one change or Change Proposal, the adjustment in Contractor's fee will be computed by determining the sum of the costs in each of the cost categories in Paragraph 13.01.B (specifically, payroll costs, Paragraph 13.01.B.1; incorporated materials and equipment costs,

Copyright© 2018 National Society of Professional Engineers, American Council of Engineering Companies, and American Society of Civil Engineers. All rights reserved.

Paragraph 13.01.B.2; Subcontract costs, Paragraph 13.01.B.3; special consultants costs, Paragraph 13.01.B.4; and other costs, Paragraph 13.01.B.5) and applying to each such cost category sum the appropriate fee from Paragraphs 11.07.C.2.a through 11.07.C.2.e, inclusive.

11.08 *Change of Contract Times*

A. The Contract Times may only be changed by a Change Order. Any Change Proposal for an adjustment in the Contract Times must comply with the provisions of Paragraph 11.09. Any Claim for an adjustment in the Contract Times must comply with the provisions of Article 12.

B. Delay, disruption, and interference in the Work, and any related changes in Contract Times, are addressed in and governed by Paragraph 4.05.

11.09 *Change Proposals*

A. *Purpose and Content*: Contractor shall submit a Change Proposal to Engineer to request an adjustment in the Contract Times or Contract Price; contest an initial decision by Engineer concerning the requirements of the Contract Documents or relating to the acceptability of the Work under the Contract Documents; challenge a set-off against payment due; or seek other relief under the Contract. The Change Proposal will specify any proposed change in Contract Times or Contract Price, or other proposed relief, and explain the reason for the proposed change, with citations to any governing or applicable provisions of the Contract Documents. Each Change Proposal will address only one issue, or a set of closely related issues.

B. *Change Proposal Procedures*

1. *Submittal*: Contractor shall submit each Change Proposal to Engineer within 30 days after the start of the event giving rise thereto, or after such initial decision.

2. *Supporting Data*: The Contractor shall submit supporting data, including the proposed change in Contract Price or Contract Time (if any), to the Engineer and Owner within 15 days after the submittal of the Change Proposal.

   a. Change Proposals based on or related to delay, interruption, or interference must comply with the provisions of Paragraphs 4.05.D and 4.05.E.

   b. Change proposals related to a change of Contract Price must include full and detailed accounts of materials incorporated into the Work and labor and equipment used for the subject Work.

   The supporting data must be accompanied by a written statement that the supporting data are accurate and complete, and that any requested time or price adjustment is the entire adjustment to which Contractor believes it is entitled as a result of said event.

3. *Engineer's Initial Review*: Engineer will advise Owner regarding the Change Proposal, and consider any comments or response from Owner regarding the Change Proposal. If in its discretion Engineer concludes that additional supporting data is needed before conducting a full review and making a ~~decision~~ recommendation regarding the Change Proposal, then Engineer may request that Contractor submit such additional supporting

Copyright© 2018 National Society of Professional Engineers, American Council of Engineering Companies, and American Society of Civil Engineers. All rights reserved.

data by a date specified by Engineer, prior to Engineer beginning its full review of the Change Proposal.

4. *Engineer's Full Review and ~~Action~~ Recommendation on the Change Proposal*: Upon receipt of Contractor's supporting data (including any additional data requested by Engineer), Engineer will conduct a full review of each Change Proposal and, within 30 days after such receipt of the Contractor's supporting data, either recommend ~~approve~~approval of the Change Proposal in whole, deny it in whole, or approve it in part and deny it in part. Such actions must be in writing, with a copy provided to Owner and Contractor. If Engineer does not take action on the Change Proposal within 30 days, then either Owner or Contractor may at any time thereafter submit a letter to the other party indicating that as a result of Engineer's inaction the Change Proposal is deemed denied, thereby commencing the time for appeal of the denial under Article 12.

5. *Binding Decision*: Engineer's recommendation is sent to the Owner who shall render a final decision. The Owner's decision is final and binding upon ~~Owner and~~ Contractor, unless ~~Owner or~~ Contractor appeals the decision by filing a Claim under Article 12.

C. *Resolution of Certain Change Proposals*: If the Change Proposal does not involve the design (as set forth in the Drawings, Specifications, or otherwise), the acceptability of the Work, or other engineering or technical matters, then Engineer will notify the parties in writing that the Engineer is unable to resolve the Change Proposal. For purposes of further resolution of such a Change Proposal, such notice will be deemed a denial, and Contractor may choose to seek resolution under the terms of Article 12.

D. *Post-Completion*: Contractor shall not submit any Change Proposals after Engineer issues a written recommendation of final payment pursuant to Paragraph 15.06.B.

11.10 *Notification to Surety*

A. If the provisions of any bond require notice to be given to a surety of any change affecting the general scope of the Work or the provisions of the Contract Documents (including, but not limited to, Contract Price or Contract Times), the giving of any such notice will be Contractor's responsibility. The amount of each applicable bond will be adjusted to reflect the effect of any such change.

ARTICLE 12—CLAIMS - DELETED IN ITS ENTIRETY

12.01 *Claims* - Deleted in its entirety

A. Deleted in its entirety.~~*Claims Process*: The following disputes between Owner and Contractor are subject to the Claims process set forth in this article:~~

1. Deleted in its entirety.~~Appeals by Owner or Contractor of Engineer's decisions regarding Change Proposals;~~

2. Deleted in its entirety.~~Owner demands for adjustments in the Contract Price or Contract Times, or other relief under the Contract Documents;~~

Copyright© 2018 National Society of Professional Engineers, American Council of Engineering Companies, and American Society of Civil Engineers. All rights reserved.

3. Deleted in its entirety.~~Disputes that Engineer has been unable to address because they do not involve the design (as set forth in the Drawings, Specifications, or otherwise), the acceptability of the Work, or other engineering or technical matters; and~~

4. Deleted in its entirety.~~Subject to the waiver provisions of Paragraph 15.07, any dispute arising after Engineer has issued a written recommendation of final payment pursuant to Paragraph 15.06.B.~~

B. Deleted in its entirety.~~*Submittal of Claim*: The party submitting a Claim shall deliver it directly to the other party to the Contract promptly (but in no event later than 30 days) after the start of the event giving rise thereto; in the case of appeals regarding Change Proposals within 30 days of the decision under appeal. The party submitting the Claim shall also furnish a copy to the Engineer, for its information only. The responsibility to substantiate a Claim rests with the party making the Claim. In the case of a Claim by Contractor seeking an increase in the Contract Times or Contract Price, Contractor shall certify that the Claim is made in good faith, that the supporting data are accurate and complete, and that to the best of Contractor's knowledge and belief the amount of time or money requested accurately reflects the full amount to which Contractor is entitled.~~

C. Deleted in its entirety.~~*Review and Resolution*: The party receiving a Claim shall review it thoroughly, giving full consideration to its merits. The two parties shall seek to resolve the Claim through the exchange of information and direct negotiations. The parties may extend the time for resolving the Claim by mutual agreement. All actions taken on a Claim will be stated in writing and submitted to the other party, with a copy to Engineer.~~

D. Deleted in its entirety.~~*Mediation*~~

1. ~~At any time after initiation of a Claim, Owner and Contractor may mutually agree to mediation of the underlying dispute. The agreement to mediate will stay the Claim submittal and response process.~~

2. Deleted in its entirety.~~If Owner and Contractor agree to mediation, then after 60 days from such agreement, either Owner or Contractor may unilaterally terminate the mediation process, and the Claim submittal and decision process will resume as of the date of the termination. If the mediation proceeds but is unsuccessful in resolving the dispute, the Claim submittal and decision process will resume as of the date of the conclusion of the mediation, as determined by the mediator.~~

3. Deleted in its entirety.~~Owner and Contractor shall each pay one-half of the mediator's fees and costs.~~

E. Deleted in its entirety.~~*Partial Approval*: If the party receiving a Claim approves the Claim in part and denies it in part, such action will be final and binding unless within 30 days of such action the other party invokes the procedure set forth in Article 17 for final resolution of disputes.~~

F. Deleted in its entirety.~~*Denial of Claim*: If efforts to resolve a Claim are not successful, the party receiving the Claim may deny it by giving written notice of denial to the other party. If the receiving party does not take action on the Claim within 90 days, then either Owner or Contractor may at any time thereafter submit a letter to the other party indicating that as a result of the inaction, the Claim is deemed denied, thereby commencing the time for appeal~~

Copyright© 2018 National Society of Professional Engineers, American Council of Engineering Companies, and American Society of Civil Engineers. All rights reserved.

~~of the denial. A denial of the Claim will be final and binding unless within 30 days of the denial the other party invokes the procedure set forth in Article 17 for the final resolution of disputes.~~

G. Deleted in its entirety.~~*Final and Binding Results*: If the parties reach a mutual agreement regarding a Claim, whether through approval of the Claim, direct negotiations, mediation, or otherwise; or if a Claim is approved in part and denied in part, or denied in full, and such actions become final and binding; then the results of the agreement or action on the Claim will be incorporated in a Change Order or other written document to the extent they affect the Contract, including the Work, the Contract Times, or the Contract Price.~~

ARTICLE 13—COST OF THE WORK; ALLOWANCES; UNIT PRICE WORK

13.01 *Cost of the Work*

A. *Purposes for Determination of Cost of the Work*: The term Cost of the Work means the sum of all costs necessary for the proper performance of the Work at issue, as further defined below. The provisions of this Paragraph 13.01 are used for two distinct purposes:

1. To determine Cost of the Work when Cost of the Work is a component of the Contract Price, under cost-plus-fee, time-and-materials, or other cost-based terms; or

2. When needed to determine the value of a Change Order, Change Proposal, Claim, set-off, or other adjustment in Contract Price. When the value of any such adjustment is determined on the basis of Cost of the Work, Contractor is entitled only to those additional or incremental costs required because of the change in the Work or because of the event giving rise to the adjustment.

B. *Costs Included*: Except as otherwise may be agreed to in writing by Owner, costs included in the Cost of the Work will be in amounts no higher than those commonly incurred in the locality of the Project, will not include any of the costs itemized in Paragraph 13.01.C, and will include only the following items:

1. Payroll costs for employees in the direct employ of Contractor in the performance of the Work under schedules of job classifications agreed upon by Owner and Contractor in advance of the subject Work. Such employees include, without limitation, superintendents, foremen, safety managers, safety representatives, and other personnel employed full time on the Work. Payroll costs for employees not employed full time on the Work will be apportioned on the basis of their time spent on the Work. Payroll costs include, but are not limited to, salaries and wages plus the cost of fringe benefits, which include social security contributions, unemployment, excise, and payroll taxes, workers' compensation, health and retirement benefits, sick leave, and vacation and holiday pay applicable thereto. The expenses of performing Work outside of regular working hours, on Saturday, Sunday, or legal holidays, will be included in the above to the extent authorized by Owner.

2. Cost of all materials and equipment furnished and incorporated in the Work, including costs of transportation and storage thereof, and Suppliers' field services required in connection therewith. All cash discounts accrue to Contractor unless Owner deposits funds with Contractor with which to make payments, in which case the cash discounts

Copyright© 2018 National Society of Professional Engineers, American Council of Engineering Companies, and American Society of Civil Engineers. All rights reserved.

will accrue to Owner. All trade discounts, rebates, and refunds and returns from sale of surplus materials and equipment will accrue to Owner, and Contractor shall make provisions so that they may be obtained.

3. Payments made by Contractor to Subcontractors for Work performed by Subcontractors. If required by Owner, Contractor shall obtain competitive bids from subcontractors acceptable to Owner and Contractor and shall deliver such bids to Owner, which will then determine, with the advice of Engineer, which bids, if any, will be acceptable. If any subcontract provides that the Subcontractor is to be paid on the basis of Cost of the Work plus a fee, the Subcontractor's Cost of the Work and fee will be determined in the same manner as Contractor's Cost of the Work and fee as provided in this Paragraph 13.01.

4. Costs of special consultants (including but not limited to engineers, architects, testing laboratories, and surveyors~~, attorneys, and accountants~~) employed or retained for services specifically related to the Work.

5. Other costs consisting of the following:

    a. The proportion of necessary transportation, travel, and subsistence expenses of Contractor's employees incurred in discharge of duties connected with the Work.

    b. Cost, including transportation and maintenance, of all materials, supplies, equipment, machinery, appliances, office, and temporary facilities at the Site, which are consumed in the performance of the Work, and cost, less market value, of such items used but not consumed which remain the property of Contractor.

        1) In establishing included costs for materials such as scaffolding, plating, or sheeting, consideration will be given to the actual or the estimated life of the material for use on other projects; or rental rates may be established on the basis of purchase or salvage value of such items, whichever is less. Contractor will not be eligible for compensation for such items in an amount that exceeds the purchase cost of such item.

    c. *Construction Equipment Rental*

        1) Rentals of all construction equipment and machinery, and the parts thereof, in accordance with rental agreements approved by Owner as to price (including any surcharge or special rates applicable to overtime use of the construction equipment or machinery), and the costs of transportation, loading, unloading, assembly, dismantling, and removal thereof. All such costs will be in accordance with the terms of said rental agreements. The rental of any such equipment, machinery, or parts must cease when the use thereof is no longer necessary for the Work.

        2) Costs for equipment and machinery owned by Contractor or a Contractor-related entity will be paid at a rate shown for such equipment in the equipment rental rate book specified in the Supplementary Conditions. An hourly rate will be computed by dividing the monthly rates by 176. These computed rates will include all operating costs.

Copyright© 2018 National Society of Professional Engineers, American Council of Engineering Companies, and American Society of Civil Engineers. All rights reserved.

3) With respect to Work that is the result of a Change Order, Change Proposal, Claim, set-off, or other adjustment in Contract Price ("changed Work"), included costs will be based on the time the equipment or machinery is in use on the changed Work and the costs of transportation, loading, unloading, assembly, dismantling, and removal when directly attributable to the changed Work. The cost of any such equipment or machinery, or parts thereof, must cease to accrue when the use thereof is no longer necessary for the changed Work.

d. Sales, consumer, use, and other similar taxes related to the Work, and for which Contractor is liable, as imposed by Laws and Regulations.

e. Deposits lost for causes other than negligence of Contractor, any Subcontractor, or anyone directly or indirectly employed by any of them or for whose acts any of them may be liable, and royalty payments and fees for permits and licenses.

f. Losses and damages (and related expenses) caused by damage to the Work, not compensated by insurance or otherwise, sustained by Contractor in connection with the performance of the Work (except losses and damages within the deductible amounts of builder's risk or other property insurance established in accordance with Paragraph 6.04), provided such losses and damages have resulted from causes other than the negligence of Contractor, any Subcontractor, or anyone directly or indirectly employed by any of them or for whose acts any of them may be liable. Such losses include settlements made with the written consent and approval of Owner. No such losses, damages, and expenses will be included in the Cost of the Work for the purpose of determining Contractor's fee.

g. The cost of utilities, fuel, and sanitary facilities at the Site.

h. Minor expenses such as communication service at the Site, express and courier services, and similar petty cash items in connection with the Work.

i. The costs of premiums for all bonds and insurance that Contractor is required by the Contract Documents to purchase and maintain.

C. *Costs Excluded*: The term Cost of the Work does not include any of the following items:

1. Payroll costs and other compensation of Contractor's officers, executives, principals, general managers, engineers, architects, estimators, attorneys, auditors, accountants, purchasing and contracting agents, expediters, timekeepers, clerks, and other personnel employed by Contractor, whether at the Site or in Contractor's principal or branch office for general administration of the Work and not specifically included in the agreed upon schedule of job classifications referred to in Paragraph 13.01.B.1 or specifically covered by Paragraph 13.01.B.4. The payroll costs and other compensation excluded here are to be considered administrative costs covered by the Contractor's fee.

2. The cost of purchasing, renting, or furnishing small tools and hand tools.

3. Expenses of Contractor's principal and branch offices other than Contractor's office at the Site.

4. Any part of Contractor's capital expenses, including interest on Contractor's capital employed for the Work and charges against Contractor for delinquent payments.

Copyright© 2018 National Society of Professional Engineers, American Council of Engineering Companies, and American Society of Civil Engineers. All rights reserved.

5. Costs due to the negligence, recklessness, or intentional misconduct of Contractor, any Subcontractor, or anyone directly or indirectly employed by any of them or for whose acts any of them may be liable, including but not limited to, the correction of defective Work, disposal of materials or equipment wrongly supplied, and making good any damage to property.

6. Expenses incurred in preparing and advancing Claims.

7. Other overhead or general expense costs of any kind and the costs of any item not specifically and expressly included in Paragraph 13.01.B.

D. *Contractor's Fee*

1. When the Work as a whole is performed on the basis of cost-plus-a-fee, then:

a. Contractor's fee for the Work set forth in the Contract Documents as of the Effective Date of the Contract will be determined as set forth in the Agreement.

b. for any Work covered by a Change Order, Change Proposal, Claim, set-off, or other adjustment in Contract Price on the basis of Cost of the Work, Contractor's fee will be determined as follows:

1) When the fee for the Work as a whole is a percentage of the Cost of the Work, the fee will automatically adjust as the Cost of the Work changes.

2) When the fee for the Work as a whole is a fixed fee, the fee for any additions or deletions will be determined in accordance with Paragraph 11.07.C.2.

2. When the Work as a whole is performed on the basis of a stipulated sum, or any other basis other than cost-plus-a-fee, then Contractor's fee for any Work covered by a Change Order, Change Proposal, Claim, set-off, or other adjustment in Contract Price on the basis of Cost of the Work will be determined in accordance with Paragraph 11.07.C.2.

E. *Documentation and Audit*: Whenever the Cost of the Work for any purpose is to be determined pursuant to this Article 13, Contractor and pertinent Subcontractors will establish and maintain records of the costs in accordance with generally accepted accounting practices. Subject to prior written notice, Owner will be afforded reasonable access, during normal business hours, to all Contractor's accounts, records, books, correspondence, instructions, drawings, receipts, vouchers, memoranda, and similar data relating to the Cost of the Work and Contractor's fee. Contractor shall preserve all such documents for a period of three years after the final payment by Owner. Pertinent Subcontractors will afford such access to Owner, and preserve such documents, to the same extent required of Contractor.

13.02 *Allowances*

A. It is understood that Contractor has included in the Contract Price all allowances so named in the Contract Documents and shall cause the Work so covered to be performed for such sums and by such persons or entities as may be acceptable to Owner and Engineer.

Copyright© 2018 National Society of Professional Engineers, American Council of Engineering Companies, and American Society of Civil Engineers. All rights reserved.

B. *Cash Allowances*: Contractor agrees that:

1. the cash allowances include the cost to Contractor (less any applicable trade discounts) of materials and equipment required by the allowances to be delivered at the Site, and all applicable taxes; and

2. Contractor's costs for unloading and handling on the Site, labor, installation, overhead, profit, and other expenses contemplated for the cash allowances have been included in the Contract Price and not in the allowances, and no demand for additional payment for any of the foregoing will be valid.

C. *Owner's Contingency Allowance*: Contractor agrees that an Owner's contingency allowance, if any, is for the sole use of Owner to cover unanticipated costs.

D. Prior to final payment, an appropriate Change Order will be issued as recommended by Engineer to reflect actual amounts due Contractor for Work covered by allowances, and the Contract Price will be correspondingly adjusted.

13.03 *Unit Price Work*

A. Where the Contract Documents provide that all or part of the Work is to be Unit Price Work, initially the Contract Price will be deemed to include for all Unit Price Work an amount equal to the sum of the unit price for each separately identified item of Unit Price Work times the estimated quantity of each item as indicated in the Agreement.

B. The estimated quantities of items of Unit Price Work are ~~not guaranteed~~estimates and are solely for the purpose of comparison of Bids and determining an initial Contract Price. Payments to Contractor for Unit Price Work will be based on actual quantities.

C. Each unit price shall be guaranteed and will be deemed to include an amount considered by Contractor to be adequate to cover Contractor's overhead and profit for each separately identified item.

D. Engineer will determine the actual quantities and classifications of Unit Price Work performed by Contractor. Engineer will review with Contractor the Engineer's preliminary determinations on such matters before rendering a written decision thereon (by recommendation of an Application for Payment or otherwise). Engineer's written decision thereon will be final and binding (except as modified by Engineer to reflect changed factual conditions or more accurate data) upon Owner and Contractor, and the final adjustment of Contract Price will be set forth in a Change Order, subject to the provisions of the following paragraph.

E. *Adjustments in Unit Price*

1. Contractor or Owner shall be entitled to an adjustment in the unit price with respect to an item of Unit Price Work if:

a. the quantity of the item of Unit Price Work performed by Contractor differs materially and significantly from the estimated quantity of such item indicated in the Agreement; and

b. Contractor's unit costs to perform the item of Unit Price Work have changed materially and significantly as a result of the quantity change.

Copyright© 2018 National Society of Professional Engineers, American Council of Engineering Companies, and American Society of Civil Engineers. All rights reserved.

2. The adjustment in unit price will account for and be coordinated with any related changes in quantities of other items of Work, and in Contractor's costs to perform such other Work, such that the resulting overall change in Contract Price is equitable to Owner and Contractor.

3. Adjusted unit prices will apply to all units of that item.

ARTICLE 14—TESTS AND INSPECTIONS; CORRECTION, REMOVAL, OR ACCEPTANCE OF DEFECTIVE WORK~~[OLD ARTICLE 13]~~

14.01 *Access to Work*

A. Owner, Engineer, their consultants and other representatives and personnel of Owner, independent testing laboratories, and authorities having jurisdiction have access to the Site and the Work at reasonable times for their observation, inspection, and testing. Contractor shall provide them proper and safe conditions for such access and advise them of Contractor's safety procedures and programs so that they may comply with such procedures and programs as applicable.

14.02 *Tests, Inspections, and Approvals*

A. Contractor shall give Engineer timely notice of readiness of the Work (or specific parts thereof) for all required inspections and tests, and shall cooperate with inspection and testing personnel to facilitate required inspections and tests.

B. Owner shall retain and pay for the services of an independent inspector, testing laboratory, or other qualified individual or entity to perform all inspections and tests expressly required by the Contract Documents to be furnished and paid for by Owner, except that costs incurred in connection with tests or inspections of covered Work will be governed by the provisions of Paragraph 14.05.

C. If Laws or Regulations of any public body having jurisdiction require any Work (or part thereof) specifically to be inspected, tested, or approved by an employee or other representative of such public body, Contractor shall assume full responsibility for arranging and obtaining such inspections, tests, or approvals, pay all costs in connection therewith, and furnish Engineer the required certificates of inspection or approval.

D. Contractor shall be responsible for arranging, obtaining, and paying for all inspections and tests required:

1. by the Contract Documents, unless the Contract Documents expressly allocate responsibility for a specific inspection or test to Owner;

2. to attain Owner's and Engineer's acceptance of materials or equipment to be incorporated in the Work;

3. by manufacturers of equipment furnished under the Contract Documents;

4. for testing, adjusting, and balancing of mechanical, electrical, and other equipment to be incorporated into the Work; and

5. for acceptance of materials, mix designs, or equipment submitted for approval prior to Contractor's purchase thereof for incorporation in the Work.

Copyright© 2018 National Society of Professional Engineers, American Council of Engineering Companies, and American Society of Civil Engineers. All rights reserved.

Such inspections and tests will be performed by independent inspectors, testing laboratories, or other qualified individuals or entities acceptable to Owner and Engineer.

E. If the Contract Documents require the Work (or part thereof) to be approved by Owner, Engineer, or another designated individual or entity, then Contractor shall assume full responsibility for arranging and obtaining such approvals.

F. If any Work (or the work of others) that is to be inspected, tested, or approved is covered by Contractor without written concurrence of Engineer, Contractor shall, if requested by Engineer, uncover such Work for observation. Such uncovering will be at Contractor's expense unless Contractor had given Engineer timely notice of Contractor's intention to cover the same and Engineer had not acted with reasonable promptness in response to such notice.

14.03 *Defective Work*

A. *Contractor's Obligation*: It is Contractor's obligation to assure that the Work is not defective.

B. *Engineer's Authority*: Engineer has the authority to determine whether Work is defective, and to reject defective Work.

C. *Notice of Defects*: Prompt written notice of all defective Work of which Owner or Engineer has actual knowledge will be given to Contractor.

D. *Correction, or Removal and Replacement*: Promptly after receipt of written notice of defective Work, Contractor shall correct all such defective Work, whether or not fabricated, installed, or completed, or, if Engineer has rejected the defective Work, remove it from the Project and replace it with Work that is not defective.

E. *Preservation of Warranties*: When correcting defective Work, Contractor shall take no action that would void or otherwise impair Owner's special warranty and guarantee, if any, on said Work.

F. *Costs and Damages*: In addition to its correction, removal, and replacement obligations with respect to defective Work, Contractor shall pay all claims, costs, losses, and damages arising out of or relating to defective Work, including but not limited to the cost of the inspection, testing, correction, removal, replacement, or reconstruction of such defective Work, fines levied against Owner by governmental authorities because the Work is defective, and the costs of repair or replacement of work of others resulting from defective Work. Prior to final payment, if Owner and Contractor are unable to agree as to the measure of such claims, costs, losses, and damages resulting from defective Work, then Owner may impose a reasonable set-off against payments due under Article 15.

14.04 *Acceptance of Defective Work*

A. If, instead of requiring correction or removal and replacement of defective Work, Owner prefers to accept it, Owner may do so (subject, if such acceptance occurs prior to final payment, to Engineer's confirmation that such acceptance is in general accord with the design intent and applicable engineering principles, and will not endanger public safety). Contractor shall pay all claims, costs, losses, and damages attributable to Owner's evaluation of and determination to accept such defective Work (such costs to be approved by Engineer as to reasonableness), and for the diminished value of the Work to the extent not otherwise paid by Contractor. If any such acceptance occurs prior to final payment, the necessary revisions

Copyright© 2018 National Society of Professional Engineers, American Council of Engineering Companies, and American Society of Civil Engineers. All rights reserved.

in the Contract Documents with respect to the Work will be incorporated in a Change Order. If the parties are unable to agree as to the decrease in the Contract Price, reflecting the diminished value of Work so accepted, then Owner may impose a reasonable set-off against payments due under Article 15. If the acceptance of defective Work occurs after final payment, Contractor shall pay an appropriate amount to Owner.

B. Owner shall not be deemed to have accepted any defective work from Contractor that was not discovered by Engineer or Owner unless the defect was specifically detailed to Owner in writing by Contractor notifying Owner of the defective work and Owner notifies Contractor in writing that it will accept defective work (whether as-is, by receiving credit, or receiving other compensation, losses, or damage from Contractor as discussed above in Paragraph 14.04.A.) Contractor recognizes and understands that it shall not be relieved of responsibility or liability with performing defective work even if such defective work previously passed inspection by any inspector, including, without limitation, an inspector with the governing building department or a threshold inspector.

14.05 *Uncovering Work*

A. Engineer has the authority to require additional inspection or testing of the Work, whether or not the Work is fabricated, installed, or completed.

B. If any Work is covered contrary to the written request of Engineer, then Contractor shall, if requested by Engineer, uncover such Work for Engineer's observation, and then replace the covering, all at Contractor's expense.

C. If Engineer considers it necessary or advisable that covered Work be observed by Engineer or inspected or tested by others, then Contractor, at Engineer's request, shall uncover, expose, or otherwise make available for observation, inspection, or testing as Engineer may require, that portion of the Work in question, and provide all necessary labor, material, and equipment.

1. If it is found that the uncovered Work is defective, Contractor shall be responsible for all claims, costs, losses, and damages arising out of or relating to such uncovering, exposure, observation, inspection, and testing, and of satisfactory replacement or reconstruction (including but not limited to all costs of repair or replacement of work of others); and pending Contractor's full discharge of this responsibility the Owner shall be entitled to impose a reasonable set-off against payments due under Article 15.

2. If the uncovered Work is not found to be defective, Contractor shall be allowed an increase in the Contract Price or an extension of the Contract Times, directly attributable to such uncovering, exposure, observation, inspection, testing, replacement, and reconstruction. If the parties are unable to agree as to the amount or extent thereof, then Contractor may submit a Change Proposal within 30 days of the determination that the Work is not defective.

14.06 *Owner May Stop the Work*

A. If the Work is defective, or Contractor fails to supply sufficient skilled workers or suitable materials or equipment, or fails to perform the Work in such a way that the completed Work will conform to the Contract Documents, then Owner may order Contractor to stop the Work, or any portion thereof, until the cause for such order has been eliminated; however, this right

Copyright© 2018 National Society of Professional Engineers, American Council of Engineering Companies, and American Society of Civil Engineers. All rights reserved.

of Owner to stop the Work will not give rise to any duty on the part of Owner to exercise this right for the benefit of Contractor, any Subcontractor, any Supplier, any other individual or entity, or any surety for, or employee or agent of any of them. The Owner shall incur no liability for delays occasioned by any stop-work order issued in accordance with this paragraph.

14.07 *Owner May Correct Defective Work*

A. If Contractor fails within a reasonable time after written notice from Engineer to correct defective Work, or to remove and replace defective Work as required by Engineer, then Owner may, after 7 days' written notice to Contractor, correct or remedy any such deficiency.

B. In exercising the rights and remedies under this Paragraph 14.07, Owner shall proceed expeditiously. In connection with such corrective or remedial action, Owner may exclude Contractor from all or part of the Site, take possession of all or part of the Work and suspend Contractor's services related thereto, and incorporate in the Work all materials and equipment stored at the Site or for which Owner has paid Contractor but which are stored elsewhere. Contractor shall allow Owner, Owner's representatives, agents and employees, Owner's other contractors, and Engineer and Engineer's consultants access to the Site to enable Owner to exercise the rights and remedies under this paragraph.

C. All claims, costs, losses, and damages incurred or sustained by Owner in exercising the rights and remedies under this Paragraph 14.07 will be charged against Contractor as set-offs against payments due under Article 15. Such claims, costs, losses and damages will include but not be limited to all costs of repair, or replacement of work of others destroyed or damaged by correction, removal, or replacement of Contractor's defective Work.

D. Contractor shall not be allowed an extension of the Contract Times because of any delay in the performance of the Work attributable to the exercise by Owner of Owner's rights and remedies under this Paragraph 14.07.

ARTICLE 15—PAYMENTS TO CONTRACTOR; SET-OFFS; COMPLETION; CORRECTION PERIOD

15.01 *Progress Payments*

A. *Basis for Progress Payments*: The Schedule of Values established as provided in Article 2 will serve as the basis for progress payments and will be incorporated into a form of Application for Payment acceptable to Engineer and Owner. Progress payments for Unit Price Work will be based on the number of units completed during the pay period, as determined under the provisions of Paragraph 13.03. Progress payments for cost-based Work will be based on Cost of the Work completed by Contractor during the pay period.

B. *Applications for Payments*

1. ~~At least 20 days before the date established in the Agreement for each progress payment (but not more often than once a month),~~ Contractor, on the 25th of each month, shall submit to Engineer for review an Application for Payment (in a form approved by Owner) filled out and signed by Contractor covering the Work completed as of the date of the Application and accompanied by such supporting documentation as is required by the Contract Documents.

Copyright© 2018 National Society of Professional Engineers, American Council of Engineering Companies, and American Society of Civil Engineers. All rights reserved.

2. If payment is requested on the basis of materials and equipment not incorporated in the Work but delivered and suitably stored at the Site or at another location agreed to in writing, the Application for Payment must also be accompanied by: (a) a bill of sale, invoice, copies of subcontract or purchase order payments, or other documentation establishing full payment by Contractor for the materials and equipment; (b) at Owner's request, documentation warranting that Owner has received the materials and equipment free and clear of all Liens; and (c) evidence that the materials and equipment are covered by appropriate property insurance, a warehouse bond, or other arrangements to protect Owner's interest therein, all of which must be satisfactory to Owner.

3. Beginning with the second Application for Payment, each Application must include an affidavit of Contractor stating that all previous progress payments received by Contractor have been applied to discharge Contractor's legitimate obligations associated with prior Applications for Payment.

4. The amount of retainage with respect to progress payments will be as stipulated in the Agreement.

C. *Review of Applications*

1. Engineer will, within 10 days after ~~receipt of~~ each Application for Payment is stamped as received by Engineer, including each resubmittal, either indicate in writing a recommendation of payment and present the Application to Owner, or return the Application to Contractor ~~within 10 days after the date on the Application for Payment is stamped as received by Engineer~~ indicating in writing Engineer's reasons for refusing to recommend payment and the action necessary to make payment application proper. In the latter case, Contractor shall~~may~~ make the necessary corrections and resubmit the Application.

2. Engineer's recommendation of any payment requested in an Application for Payment will constitute a representation by Engineer to Owner, based on Engineer's observations of the executed Work as an experienced and qualified design professional, and on Engineer's review of the Application for Payment and the accompanying data and schedules, that to the best of Engineer's knowledge, information and belief:

   a. the Work has progressed to the point indicated;

   b. the quality of the Work is generally in accordance with the Contract Documents (subject to an evaluation of the Work as a functioning whole prior to or upon Substantial Completion, the results of any subsequent tests called for in the Contract Documents, a final determination of quantities and classifications for Unit Price Work under Paragraph 13.03, and any other qualifications stated in the recommendation); and

   c. the conditions precedent to Contractor's being entitled to such payment appear to have been fulfilled in so far as it is Engineer's responsibility to observe the Work.

Copyright© 2018 National Society of Professional Engineers, American Council of Engineering Companies, and American Society of Civil Engineers. All rights reserved.

3. By recommending any such payment Engineer will not thereby be deemed to have represented that:

    a. inspections made to check the quality or the quantity of the Work as it has been performed have been exhaustive, extended to every aspect of the Work in progress, or involved detailed inspections of the Work beyond the responsibilities specifically assigned to Engineer in the Contract; or

    b. there may not be other matters or issues between the parties that might entitle Contractor to be paid additionally by Owner or entitle Owner to withhold payment to Contractor.

4. Neither Engineer's review of Contractor's Work for the purposes of recommending payments nor Engineer's recommendation of any payment, including final payment, will impose responsibility on Engineer:

    a. to supervise, direct, or control the Work;

    b. for the means, methods, techniques, sequences, or procedures of construction, or the safety precautions and programs incident thereto;

    c. for Contractor's failure to comply with Laws and Regulations applicable to Contractor's performance of the Work;

    d. to make any examination to ascertain how or for what purposes Contractor has used the money paid by Owner; or

    e. to determine that title to any of the Work, materials, or equipment has passed to Owner free and clear of any Liens.

5. Neither Engineer's review of Contractor's Work for purposes of recommending payments nor Engineer's recommendation of any payment shall relieve Contractor of responsibility or liability for defects in the Work.

6. Engineer may refuse to recommend the whole or any part of any payment if, in Engineer's opinion, it would be incorrect to make the representations to Owner stated in Paragraph 15.01.C.2.

6. Engineer will recommend reductions in payment (set-offs) necessary in Engineer's opinion to protect Owner from loss because:

    a. the Work is defective, requiring correction or replacement;

    b. the Contract Price has been reduced by Change Orders;

    c. Owner has been required to correct defective Work in accordance with Paragraph 14.07, or has accepted defective Work pursuant to Paragraph 14.04;

    d. Owner has been required to remove or remediate a Hazardous Environmental Condition for which Contractor is responsible; or

    e. Engineer has actual knowledge of the occurrence of any of the events that would constitute a default by Contractor and therefore justify termination for cause under the Contract Documents.

Copyright© 2018 National Society of Professional Engineers, American Council of Engineering Companies, and American Society of Civil Engineers. All rights reserved.

D. *Payment Becomes Due*

1. ~~Ten days a~~Subject to the provisions of Paragraph 15.01.E. and Section 218. 735, Florida Statutes, after presentation of the Application for Payment to Owner with Engineer's recommendation, the amount recommended (subject to any Owner set-offs) shall be paid by Owner in accordance with Section 218.735, Florida Statutes, within 25 business days after the date on which the payment application is stamped as received by Engineer ~~will become due, and when due will be paid by Owner to Contractor~~.

E. *Reductions in Payment by Owner*

1. In addition to any reductions in payment (set-offs) recommended by Engineer, Owner is entitled to impose a set-off against payment based on any of the following:

   a. Claims have been made against Owner based on Contractor's conduct in the performance or furnishing of the Work, or Owner has incurred costs, losses, or damages resulting from Contractor's conduct in the performance or furnishing of the Work, including but not limited to claims, costs, losses, or damages from workplace injuries, adjacent property damage, non-compliance with Laws and Regulations, and patent infringement;

   b. Contractor has failed to take reasonable and customary measures to avoid damage, delay, disruption, and interference with other work at or adjacent to the Site;

   c. Contractor has failed to provide and maintain required bonds or insurance;

   d. Owner has been required to remove or remediate a Hazardous Environmental Condition for which Contractor is responsible;

   e. Owner has incurred extra charges or engineering costs related to submittal reviews, evaluations of proposed substitutes, tests and inspections, or return visits to manufacturing or assembly facilities;

   f. The Work is defective, requiring correction or replacement;

   g. Owner has been required to correct defective Work in accordance with Paragraph 14.07, or has accepted defective Work pursuant to Paragraph 14.04;

   h. The Contract Price has been reduced by Change Orders;

   i. An event has occurred that would constitute a default by Contractor and therefore justify a termination for cause;

   j. Liquidated or other damages have accrued as a result of Contractor's failure to achieve Milestones, Substantial Completion, or final completion of the Work;

   k. Liens have been filed in connection with the Work, except where Contractor has delivered a specific bond satisfactory to Owner to secure the satisfaction and discharge of such Liens; or

   l. Other items entitle Owner to a set-off against the amount recommended.

2. If Owner imposes any set-off against payment, whether based on its own knowledge or on the written recommendations of Engineer, Owner will give Contractor immediate written notice (with a copy to Engineer) stating the reasons for such action and the

Copyright© 2018 National Society of Professional Engineers, American Council of Engineering Companies, and American Society of Civil Engineers. All rights reserved.

specific amount of the reduction, and promptly pay Contractor any amount remaining after deduction of the amount so withheld. Owner shall promptly pay Contractor the amount so withheld, or any adjustment thereto agreed to by Owner and Contractor, if Contractor remedies the reasons for such action. The reduction imposed will be binding on Contractor unless it duly submits a Change Proposal contesting the reduction.

3. Upon a subsequent determination that Owner's refusal of payment was not justified, the amount wrongfully withheld will be treated as an amount due as determined by Paragraph 15.01.D.1 and subject to interest as provided in the Agreement.

15.02 *Contractor's Warranty of Title*

A. Contractor warrants and guarantees that title to all Work, materials, and equipment furnished under the Contract will pass to Owner free and clear of (1) all Liens and other title defects, and (2) all patent, licensing, copyright, or royalty obligations, no later than 7 days after the time of payment by Owner.

15.03 *Substantial Completion*

A. When Contractor considers the entire Work ready for its intended use Contractor shall notify Owner and Engineer in writing that the entire Work is substantially complete and request that Engineer issue a certificate of Substantial Completion. Contractor shall at the same time submit to Owner and Engineer an initial draft of Ppunch lList items to be completed or corrected before final payment. Substantial Completion cannot occur before the ~~Project is issued a Certificate of Occupancy (or Completion, if applicable) by the governing building department that allows~~ Owner is able to begin to utilize the entire ~~Project~~Work for the purposes for which it was intended.

B. Promptly after Contractor's notification, Owner, Contractor, and Engineer shall make an inspection of the Work to determine the status of completion. If Engineer does not consider the Work substantially complete, Engineer will notify Contractor in writing giving the reasons therefor.

C. If Engineer considers the Work substantially complete, Engineer will deliver to Owner a preliminary certificate of Substantial Completion which will fix the date of Substantial Completion ~~subject to Certificate of Occupancy (or Completion)~~. Engineer shall attach to the certificate a ppunch lList of items to be completed or corrected before final payment. Owner shall have 7 days after receipt of the preliminary certificate during which to make written objection to Engineer as to any provisions of the certificate or attached Ppunch lList. If, after considering the objections to the provisions of the preliminary certificate, Engineer concludes that the Work is not substantially complete, Engineer will, within 14 days after submission of the preliminary certificate to Owner, notify Contractor in writing that the Work is not substantially complete, stating the reasons therefor. If Owner does not object to the provisions of the certificate, or if despite consideration of Owner's objections Engineer concludes that the Work is substantially complete, then Engineer will, within said 14 days, execute and deliver to Owner and Contractor a final certificate of Substantial Completion (with a revised ppunch lList of items to be completed or corrected) reflecting such changes from the preliminary certificate as Engineer believes justified after consideration of any objections from Owner.

Copyright© 2018 National Society of Professional Engineers, American Council of Engineering Companies, and American Society of Civil Engineers. All rights reserved.

D. At the time of receipt of the preliminary certificate of Substantial Completion, Owner and Contractor will confer regarding Owner's use or occupancy of the Work following Substantial Completion, review the builder's risk insurance policy with respect to the end of the builder's risk coverage, and confirm the transition to coverage of the Work under a permanent property insurance policy held by Owner. Unless Owner and Contractor agree otherwise in writing, Owner shall bear responsibility for security, operation, protection of the Work, property insurance, maintenance, heat, and utilities upon Owner's use or occupancy of the Work.

E. After Substantial Completion the Contractor shall promptly begin work on the Ppunch Llist of items to be completed or corrected prior to final payment. In appropriate cases Contractor may submit monthly Applications for Payment for completed ppunch llist items, following the progress payment procedures set forth above.

F. Owner shall have the right to exclude Contractor from the Site after the date of Substantial Completion subject to allowing Contractor reasonable access to remove its property and complete or correct items on the Ppunch llist.

15.04 *Partial Use or Occupancy*

A. Prior to Substantial Completion of all the Work, Owner may use or occupy any substantially completed part of the Work which has specifically been identified in the Contract Documents, or which Owner, Engineer, and Contractor agree constitutes a separately functioning and usable part of the Work that can be used by Owner for its intended purpose without significant interference with Contractor's performance of the remainder of the Work, subject to the following conditions:

1. At any time, Owner may request in writing that Contractor permit Owner to use or occupy any such part of the Work that Owner believes to be substantially complete. If and when Contractor agrees that such part of the Work is substantially complete, Contractor, Owner, and Engineer will follow the procedures of Paragraph 15.03.A through 15.03.E for that part of the Work.

2. At any time, Contractor may notify Owner and Engineer in writing that Contractor considers any such part of the Work substantially complete and request Engineer to issue a certificate of Substantial Completion for that part of the Work.

3. Within a reasonable time after either such request, Owner, Contractor, and Engineer shall make an inspection of that part of the Work to determine its status of completion. If Engineer does not consider that part of the Work to be substantially complete, Engineer will notify Owner and Contractor in writing giving the reasons therefor. If Engineer considers that part of the Work to be substantially complete, the provisions of Paragraph 15.03 will apply with respect to certification of Substantial Completion of that part of the Work and the division of responsibility in respect thereof and access thereto.

4. No use or occupancy or separate operation of part of the Work may occur prior to compliance with the requirements of Paragraph 6.04 regarding builder's risk or other property insurance.

Copyright© 2018 National Society of Professional Engineers, American Council of Engineering Companies, and American Society of Civil Engineers. All rights reserved.

15.05 *Final Inspection – Punch List*

A. Upon written notice from Contractor that the entire Work or an agreed portion thereof is complete, Engineer will promptly make a final inspection with Owner and Contractor and will notify Contractor in writing of all particulars in which this inspection reveals that the Work, or agreed portion thereof, is incomplete or defective. Contractor shall immediately take such measures as are necessary to complete such Work or remedy such deficiencies.

15.06 *Final Payment*

A. *Application for Payment*

1. After Contractor has, in the opinion of Engineer, satisfactorily completed all corrections identified during the final inspection and has delivered, in accordance with the Contract Documents, all maintenance and operating instructions, schedules, guarantees, bonds, certificates or other evidence of insurance, certificates of inspection, annotated record documents (as provided in Paragraph 7.12), and other documents, Contractor may make application for final payment.

2. The final Application for Payment must be accompanied (except as previously delivered) by:

   a. all documentation called for in the Contract Documents, including but not limited to, the evidence that Contractor maintains completed operations coverage for its required commercial general liability (CGL) ~~insruance~~insurance;

   b. consent of the surety, if any, to final payment;

   c. satisfactory evidence that all title issues have been resolved such that title to all Work, materials, and equipment has passed to Owner free and clear of any Liens or other title defects, or will so pass upon final payment.

   d. a list of all duly pending Change Proposals and Claims; and

   e. complete and legally effective final releases or waivers (satisfactory to Owner) of all Lien rights ~~arising out of the Work,~~ and ~~of~~ Liens filed in connection with the Work.

3. In lieu of the final releases or waivers of Liens specified in Paragraph 15.06.A.2 and as approved by Owner, Contractor may furnish receipts or releases in full and an affidavit of Contractor whereby Contractor swears that: (a) ~~the releases and receipts include~~ all payrolls~~labor~~, services, material, and equipment bills and other indebtedness connected with the Work for which Owner has paid Contractor through the date of Contractor's final Application for Payment have been paid by Contractor ~~a Lien could be filed~~; and (b) all payrolls, material and equipment bills, and other indebtedness connected with the Work for which Owner will pay Contractor in the final Application for Payment will represent Contractor's receipt of all payments for the Work except for the specifically enumerated Claims (and Claims not specifically enumerated are deemed released and waived) and that Contractor will promptly pay its Subcontractors and Suppliers upon its receipt of the final payment. ~~might in any way be responsible, or which might in any way result in liens or other burdens on Owner's property, have been paid or otherwise satisfied.~~ If any

Copyright© 2018 National Society of Professional Engineers, American Council of Engineering Companies, and American Society of Civil Engineers. All rights reserved.

Subcontractor or Supplier fails to furnish such a release or receipt in full, Contractor may furnish a bond or other collateral satisfactory to Owner to indemnify Owner against any Lien, or Owner at its option may issue joint checks payable to Contractor and specified Subcontractors and Suppliers.

4. The documents and materials that Contractor is required to submit to accompany its Final Application for Payment (as set forth in this Paragraph 15.06) are conditions precedent to issuance of final payment.

B. *Engineer's Review of Final Application and Recommendation of Payment*: If, on the basis of Engineer's observation of the Work during construction and final inspection, and Engineer's review of the final Application for Payment and accompanying documentation as required by the Contract Documents, Engineer is satisfied that the Work has been completed and Contractor's other obligations under the Contract have been fulfilled, Engineer will, within 10 days after receipt of the final Application for Payment, indicate in writing Engineer's recommendation of final payment and present the final Application for Payment to Owner for payment. Such recommendation will account for any set-offs against payment that are necessary in Engineer's opinion to protect Owner from loss for the reasons stated above with respect to progress payments. Otherwise, Engineer will return the Application for Payment to Contractor, indicating in writing the reasons for refusing to recommend final payment, in which case Contractor shall make the necessary corrections and resubmit the Application for Payment.

C. *Notice of Acceptability*: In support of its recommendation of payment of the final Application for Payment, Engineer will also give written notice to Owner and Contractor that the Work is acceptable, subject to stated limitations in the notice and to the provisions of Paragraph 15.07.

D. *Completion of Work*: The Work is complete (subject to surviving obligations) when it is ready for final payment as established by the Engineer's written recommendation of final payment and issuance of notice of the acceptability of the Work.

E. *Final Payment Becomes Due*: Upon receipt from Engineer of the final Application for Payment and accompanying documentation, Owner shall set off against the amount recommended by Engineer for final payment any further sum to which Owner is entitled, including but not limited to set-offs for liquidated damages and set-offs allowed under the provisions of this Contract with respect to progress payments. Owner shall pay the resulting balance due to Contractor within Twenty-five (25)~~30~~ days of the final Application for Payment being stamped as received by ~~Owner's receipt of the final Application for Payment from~~ Engineer.

15.07 *Waiver of Claims*

A. By making final payment, Owner waives its claim or right to liquidated damages or other damages for late completion by Contractor, except as set forth in an outstanding Claim, appeal under the provisions of Article 17, set-off, or express reservation of rights by Owner. Owner reserves all other claims or rights after final payment.

B. The acceptance of final payment by Contractor will constitute a waiver by Contractor of all claims and rights against Owner other than those pending matters that have been duly submitted as a Claim, or appealed under the provisions of Article 17.

Copyright© 2018 National Society of Professional Engineers, American Council of Engineering Companies, and American Society of Civil Engineers. All rights reserved.

15.08 *Correction Period*

A. If within one year after the date of Substantial Completion (or such longer period of time as may be prescribed by the Supplementary Conditions or the terms of any applicable special guarantee required by the Contract Documents), Owner gives Contractor written notice that any Work has been found to be defective, or that Contractor's repair of any damages to the Site or adjacent areas has been found to be defective, then after receipt of such notice of defect Contractor shall promptly, without cost to Owner and in accordance with Owner's written instructions:

1. correct the defective repairs to the Site or such adjacent areas;
2. correct such defective Work;
3. remove the defective Work from the Project and replace it with Work that is not defective, if the defective Work has been rejected by Owner, and
4. satisfactorily correct or repair or remove and replace any damage to other Work, to the work of others, or to other land or areas resulting from the corrective measures.

B. Owner shall give any such notice of defect within 60 days of the discovery that such Work or repairs is defective. If such notice is given within such 60 days but after the end of the correction period, the notice will be deemed a notice of defective Work under Paragraph 7.17.B.

C. If, after receipt of a notice of defect within 60 days and within the correction period, Contractor does not promptly comply with the terms of Owner's written instructions, or in an emergency where delay would cause serious risk of loss or damage, Owner may have the defective Work corrected or repaired or may have the rejected Work removed and replaced. Contractor shall pay all costs, losses, and damages (including but not limited to all fees and charges of engineers, architects, attorneys, and other professionals and all court or arbitration or other dispute resolution costs) arising out of or relating to such correction or repair or such removal and replacement (including but not limited to all costs of repair or replacement of work of others). Contractor's failure to pay such costs, losses, and damages within 10 days of invoice from Owner will be deemed the start of an event giving rise to a Claim under Paragraph 12.01.B, such that any related Claim must be brought within 30 days of the failure to pay.

D. In special circumstances where a particular item of equipment is placed in continuous service before Substantial Completion of all the Work, the correction period for that item may start to run from an earlier date if so provided in the Specifications.

E. Where defective Work (and damage to other Work resulting therefrom) has been corrected or removed and replaced under this paragraph, the correction period hereunder with respect to such Work will be extended for an additional period of one year after such correction or removal and replacement has been satisfactorily completed.

F. Contractor's obligations under this paragraph are in addition to all other obligations and warranties. The provisions of this paragraph are not to be construed as a substitute for, or a waiver of, the provisions of any applicable statute of limitation or repose.

Copyright© 2018 National Society of Professional Engineers, American Council of Engineering Companies, and American Society of Civil Engineers. All rights reserved.

ARTICLE 16—SUSPENSION OF WORK AND TERMINATION

16.01 *Owner May Suspend Work*

A. At any time and without cause, Owner may suspend the Work or any portion thereof for a period of not more than 90 consecutive days by written notice to Contractor and Engineer. Such notice will fix the date on which Work will be resumed. Contractor shall resume the Work on the date so fixed. Contractor shall be entitled to an adjustment in the Contract Price or an extension of the Contract Times directly attributable to any such suspension. Any Change Proposal seeking such adjustments must be submitted no later than 30 days after the date fixed for resumption of Work.

16.02 *Owner May Terminate for Cause*

A. The occurrence of any one or more of the following events will constitute a default by Contractor and justify termination for cause:

1. Contractor's persistent failure to perform the Work in accordance with the Contract Documents (including, but not limited to, failure to supply sufficient skilled workers or suitable materials or equipment, or failure to adhere to the Progress Schedule);

2. Failure of Contractor to perform or otherwise to comply with a material term of the Contract Documents;

3. Contractor's disregard of Laws or Regulations of any public body having jurisdiction; ~~or~~

4. Contractor's repeated disregard of the authority of Owner or Engineer~~.~~;

5. Contractor's failure to timely pay Subcontractors and Suppliers after it receives payment from Owner, or

6. Contractor's failure to obtain or maintain the insurance required of it in the Contract.

B. If one or more of the events identified in Paragraph 16.02.A occurs, then after giving Contractor (and any surety) ~~10~~ 5 days' written notice that Owner is considering a declaration that Contractor is in default and termination of the Contract, Owner may proceed to:

1. declare Contractor to be in default, and give Contractor (and any surety) written notice that the Contract is terminated; and

2. enforce the rights available to Owner under any applicable performance bond.

C. Subject to the terms and operation of any applicable performance bond, if Owner has terminated the Contract for cause, Owner may exclude Contractor from the Site, take possession of the Work, incorporate in the Work all materials and equipment stored at the Site or for which Owner has paid Contractor but which are stored elsewhere, and complete the Work as Owner may deem expedient.

D. Owner may not proceed with termination of the Contract under Paragraph 16.02.B if Contractor within ~~7~~ 5 days of receipt of notice of intent to terminate begins to correct its failure to perform and proceeds diligently to cure such failure.

E. If Owner proceeds as provided in Paragraph 16.02.B, Contractor shall not be entitled to receive any further payment until the Work is completed. If the unpaid balance of the

Copyright© 2018 National Society of Professional Engineers, American Council of Engineering Companies, and American Society of Civil Engineers. All rights reserved.

Contract Price exceeds the cost to complete the Work, including all related claims, costs, losses, and damages (including but not limited to all fees and charges of engineers, architects, attorneys, and other professionals) sustained by Owner, such excess will be paid to Contractor. If the cost to complete the Work including such related claims, costs, losses, and damages exceeds such unpaid balance, Contractor shall pay the difference to Owner. ~~Such claims, costs, losses, and damages incurred by Owner will be reviewed by Engineer as to their reasonableness and, when so approved by Engineer, incorporated in a Change Order.~~ When exercising any rights or remedies under this paragraph, Owner shall not be required to obtain the lowest price for the Work performed.

F. Where Contractor's services have been so terminated by Owner, the termination will not affect any rights or remedies of Owner against Contractor then existing or which may thereafter accrue, or any rights or remedies of Owner against Contractor or any surety under any payment bond or performance bond. Any retention or payment of money due Contractor by Owner will not release Contractor from liability.

G. If and to the extent that Contractor has provided a performance bond under the provisions of Paragraph 6.01.A, the provisions of that bond will govern over any inconsistent provisions of Paragraphs 16.02.B and 16.02.D.

16.03 *Owner May Terminate for Convenience*

A. Upon ~~7~~ 5 days' written notice to Contractor and Engineer, Owner may, without cause and without prejudice to any other right or remedy of Owner, terminate the Contract. In such case, Contractor shall be paid for (without duplication of any items):

1. completed and acceptable Work executed in accordance with the Contract Documents prior to the effective date of termination, including fair and reasonable sums for overhead and profit on such Work;

2. expenses sustained prior to the effective date of termination in performing services and furnishing labor, materials, or equipment as required by the Contract Documents in connection with uncompleted Work, plus fair and reasonable sums for overhead and profit on such expenses; and

3. other reasonable expenses directly attributable to termination, such as demobilization expenses, and including costs incurred to prepare a termination for convenience cost proposal. Attorneys' fees, accountant fees, home office overhead and similar expenses shall not be deemed reasonable expenses.

B. Contractor shall not be paid for any loss of anticipated profits or revenue, post-termination overhead costs, or other economic loss arising out of or resulting from such termination.

16.04 *Contractor May Stop Work or Terminate*

A. If, through no act or fault of Contractor, (1) the Work is suspended for more than 90 consecutive days by Owner or under an order of court or other public authority, or (2) Engineer fails to act on any Application for Payment within 30 days after it is submitted, or (3) Owner fails for 30 days to pay Contractor any sum finally determined to be due, then Contractor may, upon 7 days' written notice to Owner and Engineer, and provided Owner or Engineer do not remedy such suspension or failure within that time, terminate the contract

Copyright© 2018 National Society of Professional Engineers, American Council of Engineering Companies, and American Society of Civil Engineers. All rights reserved.

and recover from Owner payment on the same terms as provided in Paragraph 16.03. Contractor, however, cannot terminate the Contract due to any dispute (i) concerning the amount of payment due Contractor or (ii) any amounts Owner is withholding from Contractor.

B. In lieu of terminating the Contract and without prejudice to any other right or remedy, if Engineer has failed to act on an Application for Payment within 30 days after it is submitted, or Owner has failed for 30 days to pay Contractor any sum finally determined to be due, Contractor may, 7 days after written notice to Owner and Engineer, stop the Work until payment is made of all such amounts due Contractor, including interest thereon. The provisions of this paragraph are not intended to preclude Contractor from submitting a Change Proposal for an adjustment in Contract Price or Contract Times or otherwise for expenses or damage directly attributable to Contractor's stopping the Work as permitted by this paragraph. Contractor, however, cannot stop the Work due to any dispute (i) concerning the amount of payment due Contractor or (ii) any amounts Owner is withholding from Contractor.

ARTICLE 17—FINAL RESOLUTION OF DISPUTES

17.01 *Deleted in its entirety.~~Methods and Procedures~~*

A. Deleted in its entirety.~~Disputes Subject to Final Resolution: The following disputed matters are subject to final resolution under the provisions of this article:~~

1. Deleted in its entirety.~~A timely appeal of an approval in part and denial in part of a Claim, or of a denial in full, pursuant to Article 12; and~~

2. Deleted in its entirety.~~Disputes between Owner and Contractor concerning the Work, or obligations under the Contract Documents, that arise after final payment has been made.~~

B. Deleted in its entirety.~~Final Resolution of Disputes: For any dispute subject to resolution under this article, Owner or Contractor may:~~

1. Deleted in its entirety.~~elect in writing to invoke the dispute resolution process provided for in the Supplementary Conditions;~~

2. Deleted in its entirety.~~agree with the other party to submit the dispute to another dispute resolution process; or~~

3. Deleted in its entirety.~~if no dispute resolution process is provided for in the Supplementary Conditions or mutually agreed to, give written notice to the other party of the intent to submit the dispute to a court of competent jurisdiction.~~

1. Claims, disputes or other matters in question between the parties to this Agreement shall be first subject to pre-suit mediation prior to the filing of any legal claims or litigation. Completion of pre-

Copyright© 2018 National Society of Professional Engineers, American Council of Engineering Companies, and American Society of Civil Engineers. All rights reserved.

suit mediation is a condition precedent to litigation. The obligation to mediate is a material and essential provision of the Agreement.

2. *Unless otherwise agreed in writing, the Contractor shall carry on the Work and maintain its progress during any mediation or litigation, and the Owner shall continue to make payments to the Contractor in accordance with the Contract Documents.*

3. *Either party may initiate a mediation preceding by a request in writing to the other party within a reasonable time after the claim, dispute or other matter in question has arisen, but in no event after the expiration of the applicable statute of limitations.*

4. *The parties shall endeavor in good faith to mutually agree upon an acceptable mediator. In the event the parties have not agreed upon a mediator within thirty (30) days of the request for mediation, the Orlando office of the American Arbitration Association, upon the written request of either party, shall appoint a mediator from its pool of approved mediators.*

5. *Unless otherwise mutually agreed, the mediation shall be held in accordance with the Construction Industry Mediation Rules of the American Arbitration Association currently in effect, each party to bear its own fees, costs and expenses.*

6. *In the event that pre-suit mediation is unsuccessful, all claims, disputes or other matters in question shall be resolved in the Circuit Courts of Volusia County Florida. The Parties, including the Contractor's Surety, waive Venue and Jurisdiction of any Federal Court and expressly waive Trial by Jury.*

ARTICLE 18—MISCELLANEOUS

18.01 *Giving Notice*

A. Whenever any provision of the Contract requires the giving of written notice to Owner, Engineer, or Contractor, it will be deemed to have been validly given only if delivered:

1. in person, by a commercial courier service or otherwise, to the recipient's place of business;

2. by registered or certified mail, postage prepaid, to the recipient's place of business; or

3. by e-mail to the recipient, with the words "Formal Notice" or similar in the e-mail's subject line.

18.02 *Computation of Times*

A. When any period of time is referred to in the Contract by days, it will be computed to exclude the first and include the last day of such period. If the last day of any such period falls on a Saturday or Sunday or on a day made a legal holiday by the law of the applicable jurisdiction, such day will be omitted from the computation.

18.03 *Cumulative Remedies*

A. The duties and obligations imposed by these General Conditions and the rights and remedies available hereunder to the parties hereto are in addition to, and are not to be construed in any way as a limitation of, any rights and remedies available to any or all of them which are

Copyright© 2018 National Society of Professional Engineers, American Council of Engineering Companies, and American Society of Civil Engineers. All rights reserved.

otherwise imposed or available by Laws or Regulations, by special warranty or guarantee, or by other provisions of the Contract. The provisions of this paragraph will be as effective as if repeated specifically in the Contract Documents in connection with each particular duty, obligation, right, and remedy to which they apply.

18.04 *Limitation of Damages*

A. With respect to any and all Change Proposals, Claims, disputes subject to final resolution, and other matters at issue, neither Owner nor Engineer, nor any of their officers, directors, members, partners, employees, agents, consultants, or subcontractors, shall be liable to Contractor for any claims, costs, losses, or damages sustained by Contractor on or in connection with any other project or anticipated project.

18.05 *No Waiver*

A. A party's non-enforcement of any provision will not constitute a waiver of that provision, nor will it affect the enforceability of that provision or of the remainder of this Contract.

18.06 *Survival of Obligations*

A. All representations, indemnifications, warranties, and guarantees made in, required by, or given in accordance with the Contract, as well as all continuing obligations indicated in the Contract, will survive final payment, completion, and acceptance of the Work or termination of the Contract or of the services of Contractor.

18.07 *Controlling Law*

A. This Contract is to be governed by the law of the S~~s~~tate of Florida~~in which the Project is located~~.

18.08 *Assignment of Contract*

A. Unless expressly agreed to elsewhere in the Contract, no assignment by a party to this Contract of any rights under or interests in the Contract will be binding on the other party without the written consent of the party sought to be bound; and, specifically but without limitation, money that may become due and money that is due may not be assigned without such consent (except to the extent that the effect of this restriction may be limited by law), and unless specifically stated to the contrary in any written consent to an assignment, no assignment will release or discharge the assignor from any duty or responsibility under the Contract.

18.09 *Successors and Assigns*

A. Owner and Contractor each binds itself, its successors, assigns, and legal representatives to the other party hereto, its successors, assigns, and legal representatives in respect to all covenants, agreements, and obligations contained in the Contract Documents.

18.10 *Headings*

A. Article and paragraph headings are inserted for convenience only and do not constitute parts of these General Conditions.

Copyright© 2018 National Society of Professional Engineers, American Council of Engineering Companies, and American Society of Civil Engineers. All rights reserved.

EJCDC Technical Specifications

on file with City Engineer, Junos Reed

Consisting of 260 Pages

EJCDC Drawings

on file with City Engineer, Junos Reed

Consisting of 26 Pages

EJCDC Electrical Information

on file with City Engineer, Junos Reed

Consisting of 8 Pages

EJCDC D3 Details

on file with City Engineer, Junos Reed

Consisting of 1 Page

EJCDC M1 Lift Station Mechanical Plan

on file with City Engineer, Junos Reed

Consisting of 1 Page

EJCDC Addendum No. 1

consisting of 1 page

EJCDC Addendum No. 2

consisting of 2 pages

EJCDC Exhibit No. 1
Contractor's BID Schedule
Consisting of 1 page

EJCDC Exhibit No. 2
Contractor's Submittal
Consisting of 40 pages

EJCDC Exhibit No. 3
ITB 25 - 01
on file with Office of the City Clerk
Consisting of 158 pages

EJCDC Exhibit No. 4
ITB 24 - 13

Community Development block Grant Program ("CDBG") Operating and Procedures Manual

Consisting of 23 pages

EJCDC Exhibit No. 5
ITB 24 - 13
General Decision Number FL20240137 Davis-Bacon Wage Determination

Consisting of 7 pages

SECTION 7 – REQUIRED FORMS

FORM 7.1 – BID SUBMITTAL CHECKLIST

✓ Form 7.2 – Bidder's Acknowledgement

✓ Form 7.3 – Addendum and Change Order Procedure Acknowledgement

✓ Form 7.4 – Drug Free Preference Statement

✓ Form 7.5 – Public Entity Crimes Statement

✓ Form 7.6 – Anti-Collusion

✓ Form 7.7 – Statement of Bidder's Qualifications

✓ Form 7.8 – Professional References for Previous Experience

✓ Form 7.9 – List of Subcontractors

✓ Form 7.10 – Scrutinized Companies Certification

✓ Form 7.11 – Local Business Affidavit of Eligibility

✓ Form 7.12 – E-Verify Affidavit

✓ Form 7.13 – Debarment, Suspension and Other Responsibility Matters

✓ Form 7.14 – Affidavit of Compliance with Section 287.138, Florida Statutes

✓ Form 7.15 – No Submittal Response

✓ Appendix A, 44 C.F.R. Part 18 – Certification Regarding Lobbying

✓ (Attachment 1) – Schedule of Unit Pricing

✓ Current Bonding Capacity Letter (as outlined in Section 6)

✓ Copy of all currently held Licenses (Contractor, Sunbiz, etc.)

✓ Current tax receipt for Bidder's municipality

✓ Original Bid Bond or certified check or bank draft (as outlined in Section 6).

✓ Submission of one (1) original marked "ORIGINAL" and one (1) digital (flash drive) version in PDF format

BY: RCM Utilities, LLC
Name of Business

Melissa Moss
Authorized Signature

12/20/2024
Date

This document must be completed and returned with your Submittal

FORM 7.2 – BIDDER'S ACKNOWLEDGEMENT

I have carefully examined the Invitation to Bid (ITB), Instructions to Bidders, General and/or Special Conditions, Specifications and any other documents accompanying or made a part of this invitation.

I hereby propose to furnish the goods or services specified in the ITB at the prices or rates as finally negotiated. I agree that my bid will remain firm for a period of up to one-hundred-twenty (120) days in order to allow the City of Port Orange adequate time to evaluate the proposed bid. Furthermore, I agree to abide by all conditions of the ITB.

I certify that all information contained in the bid is truthful to the best of my knowledge and belief. I further certify that I am duly authorized to submit this bid on behalf of the Bidder/Contractor as its act and deed and that the Bidder/Contractor is ready, willing and able to perform if awarded the contract.

I further certify that this bid is made without prior understanding, contract, connection, discussion or collusion with any person, firm or corporation submitting a bid for the same product or service; no officer, employee or agent of the City of Port orange City Council or of any other Bidder interested in said ITB; and that the undersigned executed this Bidder's Acknowledgement with full knowledge and understanding of the matters therein contained and was duly authorized to do so.

I further certify that having read and examined the specifications and documents for the designated services and understanding the general conditions for the contract under which services will be performed, does hereby propose to furnish all labor, equipment and material to provide the services set forth in the ITB.

I hereby declare that the following listing states any clarifications, any and all variations from and exceptions to the requirements of the specifications and documents. The undersigned further declares that the "work" will be performed in strict accordance with such requirements and understands that any exceptions to the requirements of the specifications and documents may render the bid non-responsive.

NO EXCEPTIONS ALLOWED AFTER THE BID IS SUBMITTED:

Please check one: ☑I take NO exceptions. ☐Exceptions (list below; add additional pages if necessary):

_____

_____

RCM Utilities, LLC
Name of Business

Melissa Moss
Authorized Signature

Melissa Moss Controller / Secretary
Printed Name and Title

82-4160762
Federal Identification No.

1451 Pine Grove Road
Mailing Address

Eustis, FL 32726
City, State & Zip Code

352-561-2990
Telephone Number

melissa@rcmutilities.com
E-mail Address

STATE OF: Florida COUNTY OF: Lake

The foregoing instrument was acknowledged before me by means of ☑physical presence or ☐online notarization, this

20 day of December, 2024, by Melissa Moss and who:

☑Is personally known to me; or ☐ has produced _____ as identification.

Priscilla J. Johnson Notary Public, State of Florida
Printed, typed or stamped name, commission and expiration:

PRISCILLA J. JOHNSON
Commission # HH 468310
Expires November 28, 2027

This document must be completed and returned with your Submittal

FORM 7.3 – ADDENDUM AND CHANGE ORDER PROCEDURE ACKNOWLEDGEMENT

ADDENDUM ACKNOWLEDGEMENT

I have carefully examined the Invitation to Bid (ITB), Instructions to Bidders, General and/or Special Conditions, Specification and any other documents accompanying or made a part of this ITB.

I acknowledge receipt and incorporation of the following addenda and the cost, if any, of such revisions has been included in the price of the bid proposal.

Addendum# 1 Date: 12/06/2024 Addendum# 2 Date: 12/13/2024

Addendum#_____ Date:_____ Addendum#_____ Date:_____

CHANGE ORDER PROCEDURE ACKNOWLEDGEMENT

If awarded the Contract for this Solicitation, I acknowledge that no oral statement of any person shall modify or otherwise change or affect the terms, conditions or specifications stated in the resulting contract. All change order requests shall be made in writing by the Contractor for review by the Contract Administrator for the City of Port Orange. No work shall be performed as set forth in the change order until the Contractor receives an executed Purchase Order for the requested change.

I acknowledge the above statements regarding Addendum Acknowledgement and Change Order Procedures:

RCM Utilities, LLC
Name of Business

Melissa Moss
Authorized Signature

Melissa Moss Controller / Secretary
Printed Name and Title

STATE OF: Florida COUNTY OF: Lake

The foregoing instrument was acknowledged before me by means of ☑physical presence or ☐online notarization, this 20 day of December, 2024, by Melissa Moss and who:

☑Is personally known to me; or ☐ has produced _____ as identification.

Priscilla J. Johnson
Notary Public, State of Florida
Printed, typed or stamped name, commission and expiration:

PRISCILLA J. JOHNSON
Commission # HH 468310
Expires November 28, 2027

This document must be completed and returned with your Submittal

FORM 7.4 – DRUG-FREE PREFERENCE STATEMENT

IDENTICAL TIE BIDS – Preference shall be given to businesses with drug-free workplace programs. Whenever two or more bids, proposals, statements or replies are equal with respect to price, quality and service are received by the City for procurement of commodities or contractual services, a bid received from a business that certifies that it has implemented a drug-free workplace program shall be given preference in the award process. Established procedures for processing tie bids will be followed if none of the tied Bidders have a drug-free workplace program.

In order to have a drug-free workplace program, a business shall:

1. Publish a statement notifying employees that the unlawful manufacture, distribution, dispensing, possession or use of a controlled substance is prohibited in the workplace and specifying the actions that will be taken against employees for violations of such prohibition.

2. Inform employees about the dangers of drug abuse in the workplace, the business's policy of maintaining a drug-free workplace, any available drug counseling, rehabilitation and employee assistance programs and the penalties that may be imposed upon employees for drug abuse violations.

3. Give each employee engaged in providing the commodities or contractual services that are under a bid a copy of the statement specified in subsection (1).

4. In the statement specified in subsection (1), notify the employees that, as a condition of working on the commodities or contractual services that are under the bid, the employee will abide by the terms of the statement and will notify the employer of any conviction of, or plea of guilty or nolo contendere to, any violation of chapter 893 or of any controlled substance the law of the United States or any state, for a violation occurring in the workplace no later than five (5) days after such conviction.

5. Impose a sanction on or require the satisfactory participation in a drug abuse assistance or rehabilitation program if such is available in the employee's community, by an employee who is so convicted.

6. Make a good faith effort to continue to maintain a drug-free workplace through implementation of Section 287.087, Florida Statutes.

As an authorized representative of the firm, I certify that this firm complies fully with the above requirements.

RCM Utilities, LLC
Name of Business

Melissa Moss
Authorized Signature

Melissa Moss Controller / Secretary
Printed Name and Title

STATE OF: Florida COUNTY OF: Lake

The foregoing instrument was acknowledged before me by means of ☑physical presence or ☐online notarization, this 20 day of December, 2024, by Melissa Moss and who:

☑Is personally known to me, or ☑has produced _____ as identification.

Notary Public, State of Florida
Printed, typed or stamped name, commission and expiration:

PRISCILLA J. JOHNSON
Commission # HH 468310
Expires November 28, 2027

This document must be completed and returned with your Submittal

FORM 7.5 – SWORN STATEMENT ON PUBLIC ENTITY CRIMES

UNDER SECTION 287.133(3)(A), FLORIDA STATUTES

(To be signed in the presence of a notary public or other authorized to administer oaths.)

Before me, the undersigned Authority, personally appeared affiant Melissa Moss, who, being by me first duly sworn, made the following statement:

1. The business address of 1451 Pine Grove Road Eustis, FL 32726 (name of Offeror or business) is RCM Utilities, LLC.
2. My relationship to RCM Utilities, LLC (name of Offeror or business) is Controller Secretary (relationship such as sole proprietor, partner, president, vice president.)
3. I understand that a public entity crime as defined in Section 287.133 of the Florida Statutes includes a violation of any state or federal law by a person with respect to and directly related to the transaction of business with any public entity in Florida or with an agency or political subdivision of any other state or with the United States, including, but not limited to, any proposal or contract for goods or services to be provided to any public entity or such and agency or political subdivision and involving antitrust, fraud, theft, bribery, collusion, racketeering, conspiracy or material misrepresentation.
4. I understand that "convicted" or "conviction" is defined by the Florida Statutes to mean a finding of guilt or a conviction of a public entity crime, with or without an adjudication of guilt, in any federal or state trial court of record relating to charges brought by indictment or information after July 1, 1989, as a result of a jury verdict, non-jury trial, or entry of a plea of guilt or nolo contendere.
5. I understand that "affiliate" is defined by the Florida Statutes to mean (1) a predecessor or successor of a person or a corporation convicted of a public entity crime, or (2) an entity under the control of any natural person who is active in the management of the entity and who has been convicted of a public entity crime, or (3) those officers, directors, executives, partners, shareholders, employees, members, and agents who are active in the management of an affiliate, or (4) a person or corporation who knowingly entered into a joint venture with a person who has been convicted of a public entity crime in Florida during the preceding 36 months.
6. Neither the Offeror or contractor, nor any officer, director, executive, partner, shareholder, employee, member or agent who is active in the management of the Offeror or contractor, nor any affiliate of the Offeror or contractor has been convicted of a public entity crime subsequent to July 1, 1989. **(Draw a line through paragraph 6 if paragraph 7 below applies.)**
7. ~~There has been a conviction of a public entity crime by the Offeror or contractor, or an officer, director, executive, partner, shareholder, employee, member or agent of the Offeror or contractor who is active in the management of the Offeror or contractor or an affiliate of the Offeror or contractor. A determination has been made pursuant to Section 287.133(3) by order of the Division of Administrative Hearings that it is not in the public interest for the name of the convicted person or affiliate to appear on the convicted Bidder list. The name of the convicted person or affiliate is: _____. A copy of the order of the Division Administrative Hearing is attached.~~

(Draw a line through paragraph 7 if paragraph 6 above applies)

RCM Utilities, LLC
Name of Business

Melissa Moss
Authorized Signature

Melissa Moss Controller / Secretary
Printed Name and Title

STATE OF: Florida

COUNTY OF: Lake

The foregoing instrument was acknowledged before me by means of ☑physical presence or ☐online notarization, this 20 day of December, 2024, by Melissa Moss and who:

☑Is personally known to me; or ☐ has produced _____ as identification.

Priscilla Johnson
Notary Public, State of Florida

Printed, typed or stamped name, commission and expiration:

PRISCILLA J. JOHNSON
Commission # HH 468310
Expires November 28, 2027

This document must be completed and returned with your Submittal

FORM 7.6 – ANTI-COLLUSION

By signing this form, the Bidder agrees that this bid is made without any other understanding, agreement or connection with any person, corporation or firm submitting a bid for the same purpose and that the bid is in all respects fair and without collusion or fraud.

SIGN in ink in the space provided below. Unsigned bids will be considered incomplete and will be disqualified and rejected.

IT IS AGREED BY THE UNDERSIGNED BIDDER THAT THE SIGNING AND DELIVERY OF THE BID REPRESENTS THE BIDDER'S ACCEPTANCE OF THE TERMS AND CONDITIONS OF THE FOREGOING SPECIFICATIONS, CONTRACT AND PROVISION, AND IF AWARDED, THIS CONTRACT WILL REPRESENT THE AGREEMENT BETWEEN THE BIDDERS AND THE CITY OF PORT ORANGE.

NAME OF FIRM: RCM Utilities, LLC

SIGNED BY: Melissa Moss

(MUST BE SIGNED BY A COMPANY OFFICER OR AUTHORIZED AGENT)

PRINTED SIGNATURE: Melissa Moss

TITLE: Controller / Secretary

ADDRESS: 1451 Pine Grove Road

CITY, STATE AND ZIP CODE: Eustis, FL 32726

TELEPHONE: 352-561-2990

F.E.I.N.: 82-4160762

NO bid may be withdrawn for a period of one-hundred-twenty (120) days subsequent to the submittal of the bids without the consent of the City of Port Orange.

This document must be completed and returned with your Submittal

FORM 7.7 – STATEMENT OF BIDDER'S QUALIFICATIONS

The undersigned warrants that he or she is duly authorized to complete this document, and hereby affirms that the information contained in Form 7.7 is complete, true and correct to the best of his or her knowledge and belief. If necessary, question may be answered on separate paper and attached with any additional information that may be pertinent.

A. Name of Bidder: RCM Utilities, LLC

B. Permanent main office address: 1451 Pine Grove Road Eustis, FL 32726

C. Date organized: January 2018

D. If a corporation, where incorporated: Florida

E. How many years have you been engaged in the business under your present firm or trade name? 7 years

F. Contracts on hand: (List these, showing amount of each contract and the approximate anticipated dates of completion.) **USE SEPARATE SHEET & ATTACH TO SUBMITTAL**

G. General character of work performed by your company: Underground Utility Contractor

H. Have you ever failed to complete any work awarded to you? If so, where and why? No

I. Have you ever defaulted on a contract? If so, where and why? No

J. List your major equipment currently owned or leased: **USE SEPARATE SHEET & ATTACH TO SUBMITTAL**

K. Background and experience of the principal members of your organization, including the officers: USE **SEPARATE SHEET & ATTACH TO SUBMITTAL**

L. Credit currently available: $1,000,000.00

M. Give bank name, contact name and phone number: Citizens First bank Jason Pittman 352-259-3264

Will you, upon request, fill out a detailed financial statement and furnish any other information that may be required by the Owner? ☑Yes☐No

The undersigned hereby authorizes and requests any person, firm or corporation to furnish any information requested by the Owner in verification of the recitals compromising the Statement of Bidder's Qualifications.

RCM Utilities, LLC
Name of Business

Melissa Moss
Authorized Signature

Melissa Moss Controller / Secretary
Printed Name and Title

STATE OF: Florida

COUNTY OF: Lake

The foregoing instrument was acknowledged before me by means of ☑physical presence or ☐online notarization, this 20 day of December, 2024, by Melissa Moss and who:

☑Is personally known to me; or ☐ has produced _____ as identification.

Priscilla J Johnson
Notary Public, State of Florida

Printed, typed or stamped name, commission and expiration:

PRISCILLA J. JOHNSON
Commission # HH 468310
Expires November 28, 2027

This document must be completed and returned with your Submittal

Contracts on Hand Job #/Name/Description	Annticipated Completion Date	TOTAL CONTRACT PRICE
11-22-389 Rainey Construction - GPU 10 lift Station	01/2025	$ 187,544.00
11-22-391 Rainey Construction - GPU 12 lift Station	01/2025	$ 189,156.00
12-22-408 Rainey Construction - MU 6 Lift Station	03/2025	$ 188,921.00
12-22-409 Rainey Construction - BT 7 Lift Station	02/2025	$ 118,608.00
1-23-421 Castlerock - Keys at Wildwood LS	01/2025	$ 252,212.00
3-23-448 Rainey Consturction - GPU #3	03/2025	$ 174,714.00
3-23-449 Rainey Consturction - GPU #4	02/2025	$ 181,415.00
4-23-456 Rainey Construction - MUC #8	04/2025	$ 162,914.00
6-23-478 Ciraco Underground - Avalon PH #1 & PH #2	03/2025	$ 620,023.00
8-23-490 VCDD - LSSA WTP #3 Improvements	01/2025	$ 309,371.63
10-23-498 Forestar Real Estate - Harmony W Lift Station #7	05/2025	$ 906,110.00
11-23-507 Rainey Construction - GPWCA IBT #5	05/2024	$ 269,198.00
11-23-513 GPWCA IPS #6	03/2025	$ 3,287,693.78
11-23-514 Honeysuckle / Beautyberry Golf Course IPS	01/2025	$ 473,141.28
12-23-518 Ciraco - Triumph South PH 2	03/2025	$ 231,240.00
12-23-519 Integrity Site - Leo at Wildwood	08/2025	$ 261,399.00
01-24-524 GPWCA IPS #4	06/2025	$ 2,896,231.74
01-24-533 Rainey Construction - GPU #25	06/2025	$ 178,586.00
02-24-538 VCCDD - LSSA RAS / WAS Modification	05/2025	$ 167,195.00
02-24-545 Ciraco Underground - Arbor Park LS #1	01/2025	$ 418,457.00
02-24-553 Rainey Construction - WE-1 Tunnel Pump Station	05/2025	$ 105,968.50
02-24-554 Rainey Construction - ED-1 Tunnel Pump Station	03/2025	$ 111,011.52
03-24-555 Southern Villas RV Park - Southern Villas Testing	03/2025	$ 105,300.00
03-24-557 City of Zephyrhills - Water Tower Pump Replacement	05/2025	$ 103,406.94
03-24-559 Villages Development - Timberland & Lakes Irr. Pump Station	04/2025	$ 420,967.12
3-24-564 -St. Johns County - Manhole Rehab Project	03/2025	$ 760,670.00
3-24-565 City of Eustis - Eastern WTP Well and HSP Upgrades	02/2025	$ 513,799.08
3-24-563 -City of Port Orange - Townhomes West LS Rehab	08/2025	$ 1,058,181.24
4-24-570 Rainey Construction - GPWCA SWTPS #4	01/2025	$ 252,717.00
4-24-573 Forestar - Harmony 2EF Lift Station	02/2025	$ 314,215.00
4-24-574 Town of Oakland - Oakland Lift Station #7	08/2025	$ 966,464.94
4-24-575 Florida Civil Construction - Ponkan Reserve	06/2025	$ 101,915.00
4-24-576 Rainey Construction - SP-1 Tunnel Pump Station	03/2025	$ 121,118.21
4-24-577 Rainey Construction - SP-2 Tunnel Pump Station	02/2025	$ 121,118.21
4-24-578 Rainey Construction - GPU 13	06/2025	$ 194,533.00
4-24-579 Rainey Construction - GPU 14	03/2025	$ 191,662.00
4-24-580 Rainey Construction - MU 8 Lift Station	08/2025	$ 162,914.00
4-24-581 Rainey Construction - GPU 27	05/2025	$ 202,590.00
4-24-582 Rainey Construction - GPU 16	07/2025	$ 202,305.00
4-24-583 Rainey Construction - GPU 18	03/2025	$ 187,899.35
5-24-584 Rainey Construction - GPU 22	07/2025	$ 192,119.43
5-24-585 Rainey Construction - GPU 23	02/2025	$ 200,063.11
5-24-586 Rainey Construction - GPU 24	09/2025	$ 196,463.63
5-24-587 Rainey Construction - GPU 26	08/2025	$ 202,527.53
5-24-591 VCDD- LSSA/VCSA Potable Interconnect	10/2025	$ 175,891.12
5-24-595 Rainey Construction - Peyton Villas FM Reroute	08/2025	$ 490,509.56
5-24-603 Smith Site - Hoffner II	03/2025	$ 346,225.00
5-24-604 Florida Civil - Hammock at Rock Springs	04/2025	$ 97,860.00
5-24-605 Castlerock - Elementary School W Lift Station	06/2025	$ 156,807.00

5-24-606 Briar Team - Windward Preserve Lift Station	04/2025	$ 387,160.00
5-24-607 Pleasant Hill Village LLC - Pleasant Hill WWTP Sewpercoat	02/2025	$ 103,639.00
5-24-612 - Forestar - Stonecrest Lift Station	04/2025	$ 433,032.46
5-24-613 Jon M Hall - Verona Village C Lift Station #1	09/2025	$ 383,760.00
6-24-614 Central FL Site - Woodsprings Suites Lift Station	10/2025	$ 211,508.00
6-24-615 Marlin Construction - The Grove Lift Station	02/2025	$ 112,500.00
6-24-617 Ciraco - Stone Creek POD	06/2025	$ 265,771.00
6-24-618 Paqco - VAV Groveland Lift Station	08/2025	$ 395,058.00
7-24-624 Hawthorne - WTP Generator Swap	02/2025	$ 133,100.56
7-24-625 VCDD - VCSA Collection System Repairs	07/2025	$ 439,531.00
7-24-626 Pleasant Hill - WWTP Sewpercoat	01/2025	$ 103,639.00
7-24-628 Rainey Construction - GPWCA Grinder Station #6	01/2025	$ 102,193.34
7-24-632 Rainey Construction - GPU #15	06/2025	$ 196,459.00
7-24-633 Rainey Construction - GPU #19	08/2025	$ 192,585.00
7-24-634 Hartman Civil - Boulevard Oaks Lift Station	09/2025	$ 387,919.53
7-24-635 Intrgrity Site - New Horizon Plaza	06/2025	$ 247,448.00
8-24-638 JR Davis - Blue Cedar PH 1 Lift Station	01/2025	$ 123,605.00
8-24-639 City of Panama City - Sanitary Sewer Manholes	01/2025	$ 226,382.02
8-24-640 VCCDD - VCSA LS #6 Rev-1	06/2025	$ 297,450.16
8-24-641 VCCDD - VCSA LS #28 Rev-1	04/2025	$ 233,751.36
8-24-643 Rainey Construction - GPWCA IBT #4	09/2025	$ 293,268.20
8-24-642 NSCUDD - NSU LS #17 Rev-1	08/2024	$ 334,669.51
9-24-649 - City of Zephyrhills - Effluent Pump Station	11/2025	$ 2,742,000.00
9-24-651 NSCUDD - NSCUDD - CSU WWTF SH Building Mods	07/2025	$ 152,334.44
9-24-652 Rainey Construction - MD 6 Tunnel Station	06/2025	$ 113,523.31
10-24-653 Rainey Construction - GPWCA SWTPS #3	11/2025	$ 256,044.00
10-24-654 Cityof Zephyrhills - Hidden River LS Conversion	02/2025	$ 310,958.26
10-24-656 VCCDD - LSSA LS #1 Improvements	11/2025	$ 286,967.77
10-24-657 VCCDD - LSSA LS #7 Improvements	10/2025	$ 303,326.17
10-24-658 VCCDD - LSSA LS #9 Improvements	12/2025	$ 294,101.89
10-24-659 West 2 West Constrution - Woodsong Lift Station	06/2025	$ 260,160.00
10-24-660 Rainey Construction - CR-470 Bleeds	01/2025	$ 121,189.92
11-24-662 City of Lakeland - LS #7020 Emergency Rehab	01/2025	$ 210,189.92
11-24-663 Central FL Civil - West Oak PH III Lift Station	06/2025	$ 339,911.00
11-24-664 JR Davis - Sugarloaf Ridge Lift Station	09/2025	$ 232,368.79
11-24-665 City of Daytona - Lift Station 81 Emergency Repairs	10/2025	$ 237,367.79
12-24-676 VCSA Water Services Rio Grande	10/2025	$ 390,604.65
12-24-677 Meadows of Astatula - WTP	11/2025	$ 370,000.00
12-24-679 VCSA & LSSA Site 1 Interconnect Rehab	12/2025	$ 207,653.66

EQUIPMENT LIST

Trucks:

2020 Ram 5500 with 7500 lb. crane- heavy construction truck

2020 Ford F550 with 6000 lb. crane – heavy construction truck

2022 Ford F550 with 8000 lb. crane - heavy construction truck

2023 Ford F550 with 6000lb crane – service truck

2023 Ford F550 Service Truck with crane

2023 GMC 3500 Service Truck with crane

2023 Chevrolet 2500 service truck with crane

2022 Ford F550 service truck with crane

2022 Chevrolet 3500 – Sewpercoat Truck & Trailer

2024 Ford F550 - Sewpercoat Truck & Trailer

2023 Transit Connect Plumbing Van

Total of Fleet 42 - Pickup & heavy construction and service trucks

Trailers:

2009 35' Hooper Gooseneck trailer

2018 18" Taylor Equipment trailer

2019 Triple Crown Equipment trailer

2017 Big T Trailer Equipment trailer

16' Tandem Dump trailer

2022 Tank with trailer

(6) Bigfoot Trailers

(3) U dump Trailers

EQUIPMENT LIST

Equipment:

2002 & 2012 Vactrons

(5) Kubota Excavator U354R1

(2) Kubota Excavator U17VR1

(2) Kubota Excavator U27-4R1

Kubota Excavator U55-4

Kubota Excavator KX080

(2) Skidsteer

John Deere 624E Front Wheel Loader

Mr Manhole Platinum Series

(2) 2000 Coleman Lite

Mig & Tig Welders

Concrete Mixer

30HP Tractor with bucket

Hose Monster fire hydrant test kit

5000 lb. Warehouse Forklift

3000 lb. Warehouse Forklift

Sewpercoat sewer lining trailer

Ditch Witch Trencher

(10) 3" Diaphragm Mud Hogg pumps

2" & 3" Trash Pumps

(2) Plate Compactor

Vibratory walk behind compactor

High Pressure leak stop grout pump

(4) 11000-watt welder generators

(2) 8600-watt generator

(10) 5000-watt generator

(1) gas powered air compressor

(12) Confined Space rescue kit tripod, harness, blowers & gas monitors

(4) Backflow Preventor test gauge

2022 Mobile Welding Trailer

(2) Concrete Core drill 2" – 14"

CHRISTOPHER CREECH

EMPLOYMENT EXPERIENCE:

April 2018 – Present — RCM Utilities, LLC
Position: Owner, Estimator, General Manager

Mar 2015 – April 2018 — Utility Technicians, Inc.
Position: Project Manager, Estimator, Vice President & General Manager
Duties: Estimator, supervisor, and technician for all phases of service, Expansion, modification, and repair of water and wastewater plants, lift stations, re-pump stations

July 2011 – Mar 2015 — Utility Technicians, Inc.
Position: Foreman, Construction & Service Technician
Duties: Installation and service of lift stations, construction of water plants, water line construction, sewpercoat applicator for manholes

Feb, 2008-July 2011 — Utility Technicians, Inc.
Position: Laborer
Duties: Assisted foreman with installation of lift stations, water line repairs and service work

May 2007-Feb 2008 — Kerr's Truck and Car Sales
Position: Mechanic and sales
Duties: Maintained vehicles and sold vehicles.

SKILLS:

- Wastewater Sewer Plants & Lift Stations—complete rehab & construction; motors, blowers & pump replacement & repairs; replace and repair piping & fittings; control panel repair & replacement
- Water & Hydrotank—tank cleaning, rehab (including sandblasting) & painting; inspections (with FL registered professional engineer); installation of fire water tanks
- Sanitary sewer line pressure testing and jetter cleaning
- Manhole and Wet Well rehab, including surface coating (SewperCoat) and high pressure grouting
- Operate digital inline zoom video for sewer lines
- Certified backflow tester and repair/maintenance technician

CERTIFICATIONS:

Certified Underground Utility and Excavation Contractor
License # CUC1225240
Class A CDL Driver's License
Dept of Transportation Maintenance of Traffic (Intermediate)
Confined Space Entry
Backflow Prevention Device Technician
Backflow Prevention Assembly Repair and Maintenance
Infiltrator Systems Training
DOT Drug/Alcohol Awareness Training

EDUCATION:

Umatilla High School, graduated 2007

MELISSA MOSS

EMPLOYMENT EXPERIENCE:

January 2019 – Present — RCM Utilities, LLC
Position: Executive Assistant and Corporate Officer
Duties:

- Manage all job communication and files, Notice to Owner and Release of Liens, request bonding and manage status reports with bonding company
- Manage incoming requests for bids and quotes, identify issues to review with President, create and manage responses for bids and quotes
- Manage accounts payables and receivables, process checks for signature, receive and post payments, reconcile bank and checking accounts, monthly closing, annual audit, end of year processing
- Manage human resources, including timesheets, payroll, payroll taxes, benefits, employee personnel files, time off records
- Process and maintain certificates of insurance, workers compensation, liability insurance and other related requirements and documents
- Maintain water billing community records, respond to questions and concerns with customers, accept and post payments for water bills, create weekly deposits, make adjustments and corrections to accounts, process water meter readings, generate and mail water billing charges, process all water consumption, water loss reports, and financial reports for water billing communities
- Answer, direct or handle all incoming telephone calls
- Maintain corporate personnel manual and drug-free workplace manual
- Maintain office equipment leases, repairs and supplies

Sept 2011 – Nov. 2018 — Utility Technicians, Inc.
Position: Administrative Assistant
Duties: Manage job and bid files, accounts payables and receivables, manage employee timesheets and time off records, participate in weekly job meetings and manage job scheduling board, maintain on-call schedule for technicians

April 2009 – June 2011 — Allen's Well Drilling, Inc.
Position: Secretary
Duties: Maintain the smooth running of office through a variety of administrative and clerical duties. Schedule and coordinate service work with technicians.

Jan 2006 – April 2009 — Hidden Valley Ranch & Nursery, Inc.
Position: Secretary
Duties: Answer calls, take messages, handle correspondence, arrange appointments, managing databases, manage orders going out, filing

June 1989 -Sept. 2005 — Winn-Dixie
Position: Pricing Manager
Duties: Ensure accuracy of prices for the store

EDUCATION: Clewiston High School, graduated 1989

FORM 7.8 – PROFESSIONAL REFERENCES FOR PREVIOUS EXPERIENCE

The Bidder proposes that they are qualified to perform the referenced work and has successfully done so on recent projects similar in nature and size. The City reserves the right to check references and confirm information provided herein. **Please provide three (3) current and correct references from clients for similar services. (DO NOT include the City of Port Orange)**

1. Company Name: City of Zephyrhills 5335 8th Street
   Contact Person: Joey Theel
   City, State: Zephyrhills, FL 33542
   Telephone Number: 813-714-6851
   Email Address: jtheel@ci.zephyrhills.fl.us
   Description of goods/services provided: Lift Station Rehabilitations
   Contract Amount: $1,005,822.10
   Start/End Date of Contract: On going - Annually
2. Company Name: City of Tavares 201 E Main Street
   Contact Person: Shannon Parrish
   City, State: Tavares, FL 32778
   Telephone Number: 352-516-1624
   Email Address: sparrish@tavares.org
   Description of goods/services provided: Lift Station Rehabilitations
   Contract Amount: $416,200.64
   Start/End Date of Contract: On going - Annually
3. Company Name: City of Mount Dora 510 N Baker Street
   Contact Person: Bill Millikin
   City, State: Mount Dora, FL 32757
   Telephone Number: 352-818-9350
   Email Address: millikinw@cityofmountdora.com
   Description of goods/services provided: Lift Station Rehabilitations
   Contract Amount: $652,085.73
   Start/End Date of Contract: On going - Annually

This document must be completed and returned with your Submittal.

FORM 7.8 – PROFESSIONAL REFERENCES FOR PREVIOUS EXPERIENCE (page 2)

LISTING OF PREVIOUS EXPERIENCE
COMMERCIAL CLIENT LIST

The Bidder proposes that they are qualified to perform the referenced work and has successfully done so on recent projects similar in nature and size. A minimum of three (3) projects must be listed below. The Owner reserves the right to check references and confirm information provided herein.

List clients to whom you currently provide or have in the past provided equal or similar services to those required under the City's contract as outlined in this bid package. A minimum of three (3) projects shall be listed below in order to bid on this contract. The Owner reserves the right to check references and confirm information provided herein.

1. Contact Name: Rainey Construction
   Phone: 352-748-0955 Ricky Farring - ricky.farring@raineyconstruction.com
   Current Client: ☑Yes ☐ No
   Number of years of service provided: 7 years
   Description of service: Lift Station New Construction

2. Contact Name: The Villages Community Development District
   Phone: 352-753-4747 Paul Rice - Paul.Rice@vikuswater.com
   Current Client: ☑Yes ☐ No
   Number of years of service provided: 7 Years
   Description of service: Lift Station Rehabilitations

3. Contact Name: Forestar (USA) Real Estate Group
   Phone: 407-850-3033 Chris Tyree - christyree@forestar.com
   Current Client: ☑Yes ☐ No
   Number of years of service provided: 1 1/2 years
   Description of service: Lift Station New Construction

This document must be completed and returned with your Submittal.

FORM 7.9 – LISTING OF SUBCONTRACTORS

The Bidder proposes that the following subcontractors are qualified to perform the referenced work and have successfully done so on recent projects similar in nature and size. All subcontractors whose work product accounts for 5% or more of the total contract value shall be listed. Upon approval of subcontractors listed, the successful **Bidder shall not substitute subcontractors without approval from the City Representative**. Bidder shall attach additional sheets as necessary.

Subcontractor No. 1

Name: Smooth Finish Concrete

Description of Work: Concrete pad and driveways

Percent of Contract Price: 2%

Previous Experience Together: ☑Yes ☐No

Subcontractor No. 2

Name: Fence-it

Description of Work: Vinyl coated chain link fence

Percent of Contract Price: 2%

Previous Experience Together: ☑Yes ☐No

Subcontractor No. 3

Name: Tierra Group

Description of Work: Density Testing

Percent of Contract Price: 1.5 %

Previous Experience Together: ☑Yes ☐No

Subcontractor No. 4

Name: _____

Description of Work: _____

Percent of Contract Price: _____

Previous Experience Together: ☐Yes ☐No

Subcontractor No. 5

Name: _____

Description of Work: _____

Percent of Contract Price: _____

Previous Experience Together: ☐Yes ☐No

This document must be completed and returned with your submittal

FORM 7.10 SCRUTINIZED COMPANIES CERTIFICATION

(To be signed in the presence of a notary public or other officer authorized to administer oaths.)

SCRUTINIZED COMPANIES CERTIFICATION PURSUANT TO SECTION 287.135, FLORIDA STATUTES

I, Melissa Moss Controller / Secretary, on behalf
(Print Name and Title)

of RCM Utilities, LLC ("Company"), certify that RCM Utilities, LLC
(Company Name) (Company Name)

does not:
1. Participate in a boycott of Israel; and
2. Is not on the Scrutinized Companies with Boycott Israel List; and
3. Is not on the Scrutinized Companies with Activities in Sudan List; and
4. Is not on the Scrutinized Companies with Activities in the Iran Petroleum Energy Sector List; and
5. Has not engaged in business operations in Syria.

Submitting a false certification shall be deemed a material breach of contract. The City of Port Orange shall provide notice, in writing, to the Company of the City's determination concerning the false certification. The Company shall have ninety (90) days following receipt of the notice to respond in writing and demonstrate that the determination of false certification was made in error. If the Company does not demonstrate that the City's determination of false certification was made in error, then the City shall have the right to terminate the contract and seek civil remedies pursuant to Florida Statute § 287.135.

Section 287.135, Florida Statutes prohibits the City from: 1) Contracting with companies for goods or services in any amount if at the time of bidding on, submitting a proposal for, or entering into or renewing a contract if the company is on the Scrutinized Companies that Boycott Israel List, created pursuant to Section 215.4725, F.S. or is engaged in a boycott of Israel; and 2) Contracting with companies for goods or services over $1,000,000.00 that are on either the Scrutinized Companies with activities in the Iran Petroleum Energy Sector List, created pursuant to s. 215.473, or are engaged in business operations in Syria.

As the person authorized to sign on behalf of the Company, I hereby certify that the company identified above in the section entitled "Company Name" does not participate in any boycott of Israel, is not listed on the Scrutinized Companies that Boycott Israel List, is not listed on either the Scrutinized Companies with activities in the Iran Petroleum Energy Sector List and is not engaged in business operations in Syria. I understand that pursuant to Section 287.135, Florida Statutes, the submission of a false certification may subject the company to civil penalties, attorney's fees, and/or costs. I further understand that any contract with the City for goods or services may be terminated at the option of the City if the company is found to have submitted a false certification or has been placed on the Scrutinized Companies with Activities in Sudan List or the Scrutinized Companies with Activities in the Iran Petroleum Energy Sector List.

RCM Utilities, LLC
COMPANY NAME

Melissa Moss
SIGNATURE

Melissa Moss
PRINT NAME

Controller / Secretary
TITLE

STATE OF FLORIDA

COUNTY OF: Lake

The foregoing instrument was acknowledged before me by means of ☑physical presence or ☐online notarization, this 20 day of November, 2024, by Melissa Moss and who:

☑Is personally known to me; or ☐ has produced _____ as identification.

Priscilla J. Johnson Notary Public, State of Florida
Printed, typed or stamped name, commission and expiration:

PRISCILLA J. JOHNSON
Commission # HH 468310
Expires November 28, 2027

This document to be completed and returned with your Submittal

FORM 7.11 – LOCAL BUSINESS AFFIDAVIT OF ELIGIBILITY N/A

City of Port Orange

This declaration is executed under penalty of perjury of the laws to the United States and the State of Florida

THIS AFFIDAVIT IS SUBMITTED IN REFERENCE TO THE FOLLOWING SOLICITATION:

Project# *(as applicable)*: _____

Business Name: RCM Utilities, LLC Contact Person/Title: Melissa Moss Controller/ Secretary

Mailing Address: 1451 Pine Grove Road City,State,Zip: Eustis, FL 32726

Phone Number: 352-561-2990 Email address: melissa@rcmutilities.com

Physical Presence of Business: ☐Headquarters ☐Principal Place of Business

Within Legal Boundaries: ☐City of Port Orange ☐Volusia County ☑State of Florida

FEIN (Federal Employer Identification Number): 82-4160762

Business Structure: ☐Corporation ☑LLC ☐Partnership ☐Sole Proprietorship ☐Other (Specify): _____

****PLEASE ATTACH A VALID BUSINESS TAX RECEIPT OR OTHER SUCH DOCUMENTATION****

ATTESTATION – I understand that:
A local supplier or contractor is interpreted as a respondent to a solicitation, which as of the date of the solicitation opening, has a valid Business Tax Receipt (BTR) issued by the City of Port Orange to do business in the City of Port Orange which authorizes the supplier or contractor to provide the goods, services, or construction to be purchased and has a physical address located within the limits of Port Orange from which the supplier or contractor operates or performs business. A Post Office Box cannot be used to establish physical address. This local preference is only used as part of a tie breaker during a formal solicitation. The City uses Sunbiz to verify a supplier or contractor's business address. Sunbiz is a database on the Florida Department of State, Division of Corporations website and can be accessed using this link: https://dos.myflorida.com/sunbiz/.

Exemptions from Local Preference
Local preference is not permitted when (1) the purchase is funded, in whole or in part, by an entity prohibiting application of the preferences by grant agreement, contract or applicable federal, state or local law; or (2) emergency purchasing.

As an authorized representative of the Firm, I certify that this Firm complies fully with the above requirements.

RCM Utilities, LLC
Name of Business

Melissa Moss
Authorized Signature

Melissa Moss Controller / Secretary
Printed Name and Title

STATE OF: Florida

COUNTY OF: Lake

The foregoing instrument was acknowledged before me by means of ☑physical presence or ☐online notarization, this 20 day of December, 2024, by Melissa Moss and who:

☑Is personally known to me; or ☐ has produced _____ as identification.

Priscilla J Johnson
Notary Public, State of Florida
Printed, typed or stamped name, commission and expiration:

PRISCILLA J. JOHNSON
Commission # HH 468310
Expires November 28, 2027

This document must be completed and returned with your Submittal

FORM 7.12 – E-VERIFY AFFIDAVIT

CITY OF PORT ORANGE

CONTRACTOR E-VERIFY AFFIDAVIT

IN ACCORDANCE WITH SECTION 448.095, FLORIDA STATUTES

Project Name: Lowes/ Gateway Lift Station (LS82) Rehabilitation

Solicitation Number: ITB # 25-01

I, the undersigned hereby certify that RCM Utilities, LLC **(insert contractor company name) does not employ, contract with or subcontract with an unauthorized alien, and is otherwise in full compliance with Section 448.095, Florida Statutes.**

I acknowledge that it is my responsibility to ensure full compliance with Section 448.095, Florida Statutes. I am aware enrollment in the E-Verify system for employers can be done at www.e-verify.gov.

A true and correct copy of RCM Utilities, LLC **(insert contractor company name) proof of registration in the E-Verify system is attached to this Affidavit.**

By affixing my signature below, I hereby affirm that I am duly authorized to bind the company reference herein and I will comply with all applicable E-Verify requirements.

Melissa Moss Controller / Secretary
Print or Type Name, Title

Melissa Moss
Signature of Affiant

82-4160762
Federal Employer ID Number (FEIN)

1358889
E-Verify Number

STATE OF FLORIDA

COUNTY OF: Lake

The foregoing instrument was acknowledged before me by means of ☑physical presence or ☐online notarization, this 20 day of December, 2024, by Melissa Moss and who:

☑Is personally known to me; or ☐ has produced _____ as identification.

Priscilla J. Johnson
Notary Public, State of Florida

Printed, typed or stamped name, commission and expiration:

PRISCILLA J. JOHNSON
Commission # HH 468310
Expires November 28, 2027

This document to be completed and returned with your Submittal

An official website of the United States government Here's how you know

E-Verify Menu

My Company Account

New

E-Verify+™

Modernize the employment eligibility verification process today!

Learn More

Enable E-Verify+

My Company Profile

Company Information

Company Name

RCM Utilities, LLC

Doing Business As (DBA) Name

Company ID

1358889

Enrollment Date

Nov 12, 2018

Employer Identification Number (EIN)

Unique Entity Identifier (UEI)

824160762

DUNS Number

081087815

Total Number of Employees

20 to 99

NAICS Code

238

Sector

Construction

Subsector

Specialty Trade Contractors

Edit Company Information

Employer Category

Employer Category

None of these categories apply

Edit Employer Category

Company Addresses

Physical Address

1451 Pine Grove Road
EUSTIS, FL 32726

Mailing Address

Same as Physical Address

Edit Company Addresses

Hiring Sites

Number of Sites

1

Edit Hiring Sites

Company Access and MOU

My Company is configured to:

Verify Its Own Employees

Memorandum of Understanding

View Current MOU

FORM 7.13 – CERTIFICATION REGARDING DEBARMENT, SUSPENSION AND OTHER RESPONSIBILITY MATTERS

Primary Covered Transactions

(To be completed by Prime Contractor)

1. The prospective participant certifies to the best of its knowledge and belief that it and its principals:
   (a) Are not presently debarred, suspended, proposed for debarment, declared ineligible or voluntarily excluded from covered transactions by and Federal department or agency;
   (b) Have not within a three-year period preceding this proposal bee convicted for had a civil judgement rendered against them for commission of fraud or a criminal offense in connection with obtaining, attempting to obtain or performing a public (Federal, State or local) transaction or contract under a public transaction; violation of Federal or State antitrust statutes or commission of embezzlement, theft forgery, bribery, falsification or destruction of records, making false statement or receiving stolen property.
   (c) Are not presently indicted for or otherwise criminally or civilly charged by a governmental entity (Federal, State or local) with commission of any of the offenses enumerated in paragraph 1. (b) of this certification;
   (d) Have not within a three-year period preceding this application/proposal had one or more public transactions (Federal, State or local) terminated for cause or default.
2. Where the prospective primary participant is unable to certify to any of the statements in this certification, such prospective participant shall attach an explanation to this proposal.

RCM Utilities, LLC
Organization Name

Melissa Moss Controller / Secretary
Name and Title of Authorized Representative

ITB# 25-01 Lowes/ Gateway LS Rehab
Bid Number or Project Name

Melissa Moss 12/20/24
Signature Date

This document must be completed and returned with your Submittal

FORM 7.14 – AFFIDAVIT OF COMPLIANCE WITH SECTION 287.138, FLORIDA STATUTES

AFFIDAVIT OF COMPLIANCE WITH SECTION 287.138, FLORIDA STATUTES CONTRACTING WITH FOREIGN ENTITIES OF CONCERN

The undersigned ("Affiant"), on behalf of the entity listed below ("Entity"), hereby attests under penalty of perjury as follows:

1. Affiant is the Controller / Secretary (Title) of RCM Utilities, LLC (Business Name) which does business in the State of Florida, hereinafter called the "Entity".
2. Entity is not owned by the government of a foreign country of concern, as defined in Section 287.138 (1)(c), Florida Statutes.
3. The government of a foreign country of concern does not have a controlling interest in Entity, as defined in Section 287.138 (1)(a), Florida Statutes.
4. Entity is not organized under the laws of, and does not have a principal place of business in, a foreign country of concern.
5. Entity is not owned or controlled by the government of a foreign country of concern.
6. For purposes of this affidavit, a foreign country of concern means the People's Republic of China, the Russian Federation, the Islamic Republic of Iran, the Democratic People's Republic of Korea, the Republic of Cuba, the Venezuelan regime of Nicolas Maduro, or the Syrian Arab Republic, including any agency of or any other entity of significant control of such foreign country of concern, as defined in Section 287.138(1)(c), Florida Statutes.

The undersigned is authorized to execute this affidavit on behalf of the Entity.

Date: December 20, 2024 Signed: Melissa Moss

Entity: RCM Utilities, LLC Name: Melissa Moss

Title: Controller / Secretary

STATE OF: Florida COUNTY OF: Lake

The foregoing instrument was acknowledged before me by means of ☑physical presence or ☐online notarization, this 20 day of December, 2024, by Melissa Moss and who:

☑Is personally known to me; or ☐ has produced _____ as identification.

Priscilla J. Johnson

Notary Public, State of Florida at Large:
Printed Name/Seal of Notary, Commission and Expiration Date:

(seal)
PRISCILLA J. JOHNSON
Commission # HH 468310
Expires November 28, 2027

My commission expires: November 28, 2027

This document must be completed and returned with your Submittal

FORM 7.15 – NO BID RESPONSE

If your company will not be submitting a proposal in response to this solicitation, please complete this form and return via e-mail prior to the solicitation due date established within to:

City of Port Orange
Purchasing Division
1000 City Center Circle
Port Orange, FL 32129
purchdiv@port-orange.org

This information will assist the Purchasing Division in the preparation of future solicitations.

Solicitation: ITB #25-01 Lowes/Gateway Lift Station (LS82) Rehabilitation

Company Name: _____

Contact Person Name & Title: _____

Address: _____

Telephone: _____ Email Address: _____

Please check a reason for a "no response".

☐Specifications "too tight" or geared toward on brand or manufacturer (please explain below)

☐Insufficient time to respond

☐Specifications unclear (please explain below)

☐We do not offer this product/service or an equivalent

☐Our product schedule does not permit us to perform within stated timeline for the project

☐Unable to meet specifications

☐Unable to meet bond requirements

☐Unable to hold prices firm throughout the term of the contract period

☐Unable to meet insurance requirements

☐Other: _____

Print Name: _____

Signature: _____ Date: _____

Additional Information:

_____

_____

_____

_____

If submitting this form, only this form needs to be returned. It is not necessary to return the entire solicitation package.

APPENDIX A, 44 C.F.R. PART 18 – CERTIFICATION REGARDING LOBBYING Certification for Contracts, Grants, Loans, and Cooperative Agreements

(Required for each bid or offer exceeding $100,000)

The undersigned certifies, to the best of his or her knowledge and belief, that:

1. No federal appropriated funds have been paid or will be paid, by or on behalf of the undersigned, to any person for influencing or attempting to influence an officer or employee of an agency, a Member of Congress, an officer or employee of Congress, or an employee of a Member of Congress in connection with the awarding of any federal contract, the making of any federal grant, the making of any federal loan, the entering into of any cooperative agreement, and the extension, continuation, renewal, amendment, or modification of any federal contract, grant, loan, or cooperative agreement.

2. If any funds other than federal appropriated funds have been paid or will be paid to any person for influencing or attempting to influence an officer or employee of any agency, a Member of Congress, an officer or employee of Congress, or an employee of a Member of Congress in connection with this federal contract, grant, loan, or cooperative agreement, the undersigned shall complete and submit Standard Form-LLL, "Disclosure Form to Report Lobbying," in accordance with its instructions.

3. The undersigned shall require that the language of this certification be included in the award documents for all subawards at all tiers (including subcontracts, subgrants, and contracts under grants, loans, and cooperative agreements) and that all subrecipients shall certify and disclose accordingly.

4. This certification is a material representation of fact upon which reliance was placed when this transaction was made or entered into. Submission of this certification is a prerequisite for making or entering into this transaction imposed by section 1352, Title 31, U.S.C. Any person who fails to file the required certification shall be subject to a civil penalty of not less than $10,000 and not more than $100,000 for each such failure.

The Contractor, RCM Utilities, LLC, certifies or affirms the truthfulness and accuracy of each statement of its certification and disclosure, if any. In addition, the Contractor understands and agrees that the provisions of 31 U.S.C. Chap. 38, Administrative Remedies for False Claims and Statements, apply to this certification and disclosure, if any.

Melissa Moss

Signature of Contractor's Authorized Official

Melissa Moss Controller / Secretary

Name & Title of Contractor's Authorized Official

Date: December 20, 2024

(ATTACHMENT 1) SCHEDULE OF UNIT PRICING
ITB #25-01
LOWES/GATEWAY LIFT STATION (LS82) REHABILITATION

Name of Business: RCM Utilities, LLC
Contact Person: Clayton Ruff
Email Address: cruff@rcmutilities.com
Authorized Signature: Melissa Moss

ALL UNIT PRICING IN ACCORDANCE WITH SECTION 3 - SCOPE OF WORK

Bidder must fill in each cell highlighted in GREEN, leaving no blank cells; return completed, signed form with bid submittal and include on USB/thumb drive.

ITEM #	DESCRIPTION	UNIT OF MEASURE	ESTIMATED QUANTITY	UNIT PRICE	EXTENDED PRICE
1	Mobilization/Demobilization	LS	1	$22,400.00	$22,400.00
2	Insurance, Performance and Payment Bond	LS	1	$15,000.00	$15,000.00
3	Preconstruction Video	LS	1	$1,300.00	$1,300.00
4	Construction Restoration - (site cleanup, seed and mulch)	LS	1	$12,000.00	$12,000.00
5	Lift Station Demolition, including but not limited to: - 2 suction lift pumps - Well top and internal piping - Lift Station discharge piping to existing plug valve - Sandblast concrete lift station interior - Electrical and associated conduit/piping	LS	1	$15,450.00	$15,450.00
6	Site Work (clearing and grubbing, grading, erosion control)	LS	1	$ 11,750.00	$11,750.00
7	Construction Testing (Pressure, Density Testing, etc.)	LS	1	$ 11,650.00	$11,650.00
8	Survey Layout & Record Drawings	LS	1	$ 4,250.00	$4,250.00
9	FDOT #57 Stone	CY	5	$ 1000.00	$5,000.00
10	6" Concrete Pad and Driveway	CY	12	$ 1,700.00	$20,400.00
11	Lift Station Improvements, including but not limited to: - Liner - Replace lift station top and hatch - Replace interior suction piping, rails, etc. - Reduce Concrete fillet at bottom of well	LS	1	$ 63,550.00	$ 63,550.00
12	Submersible Pump (Including base elbows, anchor bolts, guide rail systems, access hatch, and startup)	EA	2	$ 36,575.00	$ 73,150.00
13	6-in Above Ground Valve Assembly (Piping, Fittings, Valves, etc.)	LS	1	$ 64,650.00	$ 64,650.00
14	6-in PVC Force Main (Including Fittings, Restraints, Adapters, etc.)	LS	30	$ 220.00	$ 6,600.00
15	6-in HDPE Force Main - Bypass Piping (Including Fittings, Restraints, Adapters, Camlocks, etc.)	LF	105	$ 345.00	$ 36,225.00
16	6-in Plug Valve	EA	2	$ 5,325.00	$10,650.00
17	Connection to Existing 8-in Force Main	EA	1	$ 16,750.00	$16,750.00
18	Hose Bibb Relocation	EA	1	$ 1,900.00	$ 1,900.00
19	Reclaim Piping Relocation	EA	1	$ 1,900.00	$1,900.00
20	Bypass Operations	LS	1	$ 26,650.00	$26,650.00
21	6-ft Viny-Coated Chain-link Fence	LF	125	$ 106.00	$13,250.00
22	Electrical I&C	LS	1	$ 235,500.00	$235,500.00
23	Permitting	LS	1	$80,000.00	$80,000.00
	LEGEND: LS - LUMP SUM EA - EACH LF - LINEAR FEET CY - CUBIC YARD			FINAL PRICE	$749,975.00

FLORIDA SURETY BONDS, INC.

620 N. Wymore Road, Suite 200
Maitland, FL 32751
407-786-7770
Fax 407-786-7766

888-786-BOND (2663)
Fax 888-718-BOND (2663)

www. FloridaSuretyBonds.com

Nov 11th, 2024

RE: RCM Utilities, LLC Bonding Letter

To Whom It May Concern,

It is a privilege to be the surety agents for RCM Utilities, LLC. Bonds are currently written through The Gray Insurance Company which is A.M. Best Rated "A-, VIII" and has a U.S. Treasury Listing of $21,807,000.00.

RCM Utilities, LLC is an outstanding contractor and we hold them in the highest regard. We are extremely confident in our contractor and encourage you to offer them an opportunity to execute any upcoming projects.

We usually anticipate no difficulties in providing surety bonds for RCM Utilities, LLC in the $7,000,000 single, $40,000,000 aggregate range. These limits are merely guidelines and can be extended subject to underwriting which includes surety review of the contract terms, pertinent bond forms and general financial reporting at the time of said request.

This letter is not an assumption of liability or a commitment to provide any bonds unless all underwriting requirements including contract, bond form and financing review are met prior to issuing any bonds. Neither our agency, nor the surety is liable for any damages relating to this letter or project.

Should you have any questions, please do not hesitate to contact me. My email is sarah@floridasuretybonds.com and my direct line is 407-755-6353.

Best regards,

Sarah K O'Linn

Sarah K. O'Linn
Vice President, Florida Surety Bonds

Ron DeSantis, Governor

Melanie S. Griffin, Secretary

STATE OF FLORIDA
DEPARTMENT OF BUSINESS AND PROFESSIONAL REGULATION

CONSTRUCTION INDUSTRY LICENSING BOARD

THE UNDERGROUND UTILITY & EXCAVATION CO HEREIN IS CERTIFIED UNDER THE PROVISIONS OF CHAPTER 489, FLORIDA STATUTES

CREECH, CHRISTOPHER RYAN

RCM UTILITIES, LLC
1451 PINE GROVE ROAD
EUSTIS FL 32726

LICENSE NUMBER: CUC1225240

EXPIRATION DATE: AUGUST 31, 2026

Always verify licenses online at MyFloridaLicense.com

ISSUED: 08/12/2024

Do not alter this document in any form.

This is your license. It is unlawful for anyone other than the licensee to use this document.

Ron DeSantis, Governor

Melanie S. Griffin, Secretary

STATE OF FLORIDA
DEPARTMENT OF BUSINESS AND PROFESSIONAL REGULATION

CONSTRUCTION INDUSTRY LICENSING BOARD

THE GENERAL CONTRACTOR HEREIN IS CERTIFIED UNDER THE
PROVISIONS OF CHAPTER 489, FLORIDA STATUTES

STRAUB, MICHAEL JOHN

RCM UTILITIES, LLC
100 WEST MILLS AVE
EUSTIS FL 32726

LICENSE NUMBER: CGC061548

EXPIRATION DATE: AUGUST 31, 2026

Always verify licenses online at MyFloridaLicense.com

ISSUED: 08/26/2024

Do not alter this document in any form.

This is your license. It is unlawful for anyone other than the licensee to use this document.

Ron DeSantis, Governor

Melanie S. Griffin, Secretary

STATE OF FLORIDA
DEPARTMENT OF BUSINESS AND PROFESSIONAL REGULATION

CONSTRUCTION INDUSTRY LICENSING BOARD

THE PLUMBING CONTRACTOR HEREIN IS CERTIFIED UNDER THE
PROVISIONS OF CHAPTER 489, FLORIDA STATUTES

SELLERS, NICHOLAS GEORGE

RCM UTILITIES, LLC
100 W MILLS AVENUE
EUSTIS FL 32726

LICENSE NUMBER: CFC1431823

EXPIRATION DATE: AUGUST 31, 2026

Always verify licenses online at MyFloridaLicense.com

ISSUED: 07/16/2024

Do not alter this document in any form.

This is your license. It is unlawful for anyone other than the licensee to use this document.

Ron DeSantis, Governor

Melanie S. Griffin, Secretary

STATE OF FLORIDA
DEPARTMENT OF BUSINESS AND PROFESSIONAL REGULATION

ELECTRICAL CONTRACTORS' LICENSING BOARD

THE ELECTRICAL CONTRACTOR HEREIN IS CERTIFIED UNDER THE
PROVISIONS OF CHAPTER 489, FLORIDA STATUTES

LAKE, JOHN A

RCM UTILITIES, LLC
1451 PINE GROVE ROAD
EUSTIS FL 32726

LICENSE NUMBER: EC13014150

EXPIRATION DATE: AUGUST 31, 2026

Always verify licenses online at MyFloridaLicense.com

ISSUED: 08/29/2024

Do not alter this document in any form.

This is your license. It is unlawful for anyone other than the licensee to use this document.

CITY OF EUSTIS

DEVELOPMENT SERVICES
PO DRAWER 68
EUSTIS, FL 32727-1946

License Id: 25-00996 **Issued Date:** 08/15/24
Effective Date: 10/01/24 **Expiration Date:** 09/30/25
License Type: BUSINESS NON RESIDENT

Business Name: RCM UTILITIES LLC
Business Location: 100 WEST MILLS AVE

CREECH, CHRISTOPHER
CHRISTOPHER CREECH
100 W MILLS AVE
EUSTIS, FL 32726

2025

Summary of Services:

Description
BUSINESS NON RESIDENTIAL

WATER & SEWER UNDERGROUND CONT

NON-TRANSFERABLE **TO BE PLACED IN A CONSPICUOUS PLACE**

2024 FLORIDA LIMITED LIABILITY COMPANY AMENDED ANNUAL REPORT

FILED
Jun 14, 2024
Secretary of State
0950299914CC

DOCUMENT# L18000014931

Entity Name: RCM UTILITIES, LLC

Current Principal Place of Business:

1451 PINE GROVE ROAD
EUSTIS, FL 32726

Current Mailing Address:

1451 PINE GROVE ROAD
EUSTIS, FL 32726 US

FEI Number: 82-4160762

Certificate of Status Desired: No

Name and Address of Current Registered Agent:

CREECH, CHRISTOPHER R
1451 PINE GROVE ROAD
EUSTIS, FL 32726 US

The above named entity submits this statement for the purpose of changing its registered office or registered agent, or both, in the State of Florida.

SIGNATURE:

Electronic Signature of Registered Agent — Date

Authorized Person(s) Detail :

Title	MANAGER / PRESIDENT
Name	CREECH, CHRISTOPHER R
Address	1451 PINE GROVE ROAD
City-State-Zip:	EUSTIS FL 32726

Title	SECRETARY / CONTROLLER
Name	MOSS, MELISSA M
Address	1451 PINE GROVE ROAD
City-State-Zip:	EUSTIS FL 32726

Title	VP
Name	BATES, FRANCIS ALLEN III
Address	1451 PINE GROVE ROAD
City-State-Zip:	EUSTIS FL 32726

I hereby certify that the information indicated on this report or supplemental report is true and accurate and that my electronic signature shall have the same legal effect as if made under oath; that I am a managing member or manager of the limited liability company or the receiver or trustee empowered to execute this report as required by Chapter 605, Florida Statutes; and that my name appears above, or on an attachment with all other like empowered.

SIGNATURE: MELISSA MOSS MGR 06/14/2024

Electronic Signature of Signing Authorized Person(s) Detail — Date

BID BOND
Executed in 2 Counterparts

BID BOND

Bond No.: N/A

KNOW ALL MEN BY THESE PRESENTS that RCM Utilities, LLC, as Contractor, duly authorized to conduct business in the State of Florida, whose principal place of business is located at 1451 Pine Grove Road, Eustis, FL 32726 , Tel.: (352) 561-2990, (hereinafter called "PRINCIPAL"), and The Gray Casualty & Surety Company, as SURETY, duly authorized to conduct business in the State of Florida, whose principal place of business is located at 1625 West Causeway Approach, Mandeville, LA 70471,* Tel: (504) 888-7790 (hereinafter called "SURETY"), are held and firmly bound unto the City of Port Orange, Florida, as CITY, a Florida municipal corporation, whose address is City of Port Orange, 1000 City Center Circle, Port Orange, Florida 32129, Tel: (386) 506-5501, (hereinafter called "OBLIGEE" or CITY", in the penal sum of Five Percent of Amount Bid---------- dollars and (--------)/100 ($---5%---), lawful money of the United States, for the payment of which sum shall and truly be made, whereof PRINCIPAL and SURETY bind themselves, their heirs, executors, administrators, successors and assigns, jointly and severally, firmly by these presents.

THE CONDITION OF THIS OBLIGATION IS SUCH that, whereas the Principal has submitted the accompanying bid, dated December 13th, 2024, for:

Project Name/Bid No.:
LOWES/GATEWAY LIFT STATION (LS82) REHABILITATION, ITB #25-01
Project Address:
City of Port Orange, FL

Legal Description: See Attached
Perform full mechanical & electrical upgrades to the Lowes/Gateway (LS82) Lift Station.
Description of Work:
Replace the existing dry pit pumps with two submersible pumps, pour concrete pads and driveway, install bypass piping, place gravel around the lift station, build new fencing, and replace sod. Concrete, soil, and gravel replacement is required at all disturbed areas.
NOW, THEREFORE,

A. If the Principal shall not withdraw said bid withing one hundred twenty (120) days after date of opening of the same, and shall within ten (10) days after the prescribed forms are presented to it for signature, enter into a written contract with the City in accordance with the bid as accepted, and give bonds with good and sufficient surety or sureties, as may be required, for the faithful performance and proper fulfillment of such contract, then the above obligations shall be void and of no effect, otherwise to remain in full force and virtue.

B. In the event of the withdrawal of said bid within the period specified, or the failure to enter into such contract and give such bonds withing the time specified, if the principal shall pay the City the difference between the amount specified in said bid and the amount for which the City may procure the required work and supplies. If the latter amount be in excess of the former, then the above obligations then the above obligations shall be void and of no effect, otherwise to remain in full force and virtue.

IN WITNESS WHEREOF, the above parties have executed this instrument under their several seals, this 13th day of December, 2024, the name and corporate seal of each corporate party being hereto affixed and these presents duly signed by its undersigned representative, pursuant to authority of its governing body.

Note: If the firm is a sole ownership or partnership including limited liability company, two (2) witnesses are required to attest the signature. If the firm is a corporation, then the corporate secretary shall attest and affix the corporate seal (Attach power of attorney to the original bid bond and financial statement of Surety Company).
*PO Box 6202, Metairie, LA 70009-6202

PRINCIPAL: RCM Utilities, LLC

Christopher R. Creech
Signature

Christopher R. Creech
Corporate Officer & Title President

ATTEST:

Melissa Moss
Signature

Melissa Moss
Corporate Secretary (Affix Corporate Seal)

WITTNESSES:

Priscilla Johnson

ATTEST:

Susan L. Reich
Signature

Susan L. Reich, Secretary
Corporate Secretary (Affix Corporate Seal)

SURETY: The Gray Casualty & Surety Company

Jeffrey W. Reich
Attorney-in-Fact (signature)

Jeffrey W. Reich**, Attorney-in-Fact
Name & Title

Jeffrey W. Reich**, FL Lic. Resident Agent
Name of Local Resident Agent

Metairie, LA 70009-6202
City, State, Zip

(504) 888-7790
Telephone:

A.M. Best No.: 011955 NAIC No.: 10671

STATE OF Florida

COUNTY OF Orange

Before me this day personally appeared Jeffrey W. Reich (affiant), who, being duly sworn, deposes and says that he/she is the Attorney-in-Fact for the The Gray Casualty & Surety Company (corporate surety) and that this person has been authorized by The Gray Casualty & Surety Company (corporate surety) to execute the foregoing bond on behalf of the Contractor named therein in favor of the City of Port Orange, Florida.

Jeffrey W. Reich
Signature of Affiant Jeffrey W. Reich

The foregoing instrument was acknowledged before me by means of ☒physical presence or ☐online notarization, this 13th day of December, 2024, by Jeffrey W. Reich and who:

☒is personally known to me; or ☐ has produced N/A as identification.

Elizabeth Luu Karoly
Notary Public, State of Florida

Printed, typed or stamped name, commission and expiration:

Notary Public State of Florida
Elizabeth Luu Karoly
My Commission HH 283384
Expires 7/9/2026

**Inquiries: 407-786-7770

END OF BID BOND

This document must be completed and returned with your Submittal

THE GRAY CASUALTY & SURETY COMPANY
ABSTRACT OF ANNUAL STATEMENT as of December 31, 2023

The Gray Casualty & Surety Company NAIC# 10671
3601 N. I10 Service Road West, Metairie, Louisiana 70002
P.O. Box 6202, Metairie, LA 70009-6202
(504) 888-7790 (P) (504) 454-6122 (F)

ASSETS

Bonds		74,944,287
Stocks		56,558,552
Cash & Cash Equivalents		8,376,253
Short Term Investments		8,285,950
Agents Balances or Uncollected Premiums		9,403,006
Interest, Dividends & Real Estate Income Due		586,319
Other Assets		2,306,784
Total Assets	**$ 160,461,151**	

LIABILITIES, SURPLUS & OTHER FUNDS

Reserves for Losses		8,480,400
Reserves for Loss Adjustment Expenses		4,207,893
Taxes, Licenses & fees (excluding Federal & Foreign Income Taxes)		464,033
Federal and Foreign Income Taxes		13,192
Unearned Premiums		24,550,197
All Other Liabilities		6,330,694
Total Liabilities	$ 44,046,409	
Capital Stock		3,000,000
Gross Paid In and Contributed Surplus		100,930,011
Unassigned Funds (Surplus)		12,484,730
Surplus as Regards Policholders	$ 116,414,742	
Total	**$ 160,461,151**	

STATE of LOUISIANA
JEFFERSON PARISH

I, Robert P. Johnson, Chief Financial Officer of The Gray Casualty & Surety Company, do hereby depose and say that the foregoing statement is a correct exhibit of the assets and liabilities of the Company on the 31st day of December 2023.

Robert P. Johnson, Chief Financial Officer

Sworn to and subscribed before me at Metairie, Louisiana this 21st day of March 2024.

Lisa Millar, Notary Public

LISA S. MILLAR
NOTARY PUBLIC
ID NO. 69652
MY COMMISSION IS FOR LIFE

THE GRAY INSURANCE COMPANY
THE GRAY CASUALTY & SURETY COMPANY

GENERAL POWER OF ATTORNEY

Bond Number: Bid Bond **Principal:** RCM Utilities, LLC
Project: LOWES/GATEWAY LIFT STATION (LS82) REHABILITATION

KNOW ALL BY THESE PRESENTS, THAT The Gray Insurance Company and The Gray Casualty & Surety Company, corporations duly organized and existing under the laws of Louisiana, and having their principal offices in Metairie, Louisiana, do hereby make, constitute, and appoint: **Susan L. Reich, Jeffrey W. Reich, Kim E. Niv, Teresa L. Durham, Sonja Amanda Floree Harris, Cheryl A. Foley, Robert P. O'Linn, Sarah K. O'Linn, Lisa A. Roseland, and Emily J. Golecki of Maitland, Florida jointly and severally** on behalf of each of the Companies named above its true and lawful Attorney(s)-in-Fact, to make, execute, seal and deliver, for and on its behalf and as its deed, bonds, or other writings obligatory in the nature of a bond, as surety, contracts of suretyship as are or may be required or permitted by law, regulation, contract or otherwise, provided that no bond or undertaking or contract of suretyship executed under this authority shall exceed the amount of $25,000,000.00.

This Power of Attorney is granted and is signed by facsimile under and by the authority of the following Resolutions adopted by the Boards of Directors of both The Gray Insurance Company and The Gray Casualty & Surety Company at meetings duly called and held on the 26th day of June, 2003.

"RESOLVED, that the President, Executive Vice President, any Vice President, or the Secretary be and each or any of them hereby is authorized to execute a power of Attorney qualifying the attorney named in the given Power of Attorney to execute on behalf of the Company bonds, undertakings, and all contracts of surety, and that each or any of them is hereby authorized to attest to the execution of such Power of Attorney, and to attach the seal of the Company; and it is

FURTHER RESOLVED, that the signature of such officers and the seal of the Company may be affixed to any such Power of Attorney or to any certificate relating thereto by facsimile, and any such Power of Attorney or certificate bearing such facsimile signature or facsimile seal shall be binding upon the Company now and in the future when so affixed with regard to any bond, undertaking or contract of surety to which it is attached.

IN WITNESS WHEREOF, The Gray Insurance Company and The Gray Casualty & Surety Company have caused their official seals to be hereinto affixed, and these presents to be signed by their authorized officers this 4th day of November, 2022.

THE GRAY INSURANCE COMPANY SEAL

By: Michael T. Gray
Michael T. Gray
President
The Gray Insurance Company

Cullen S. Piske
President
The Gray Casualty & Surety Company

THE GRAY CASUALTY & SURETY COMPANY SEAL

State of Louisiana
ss:
Parish of Jefferson

On this 4th day of November, 2022, before me, a Notary Public, personally appeared Michael T. Gray, President of The Gray Insurance Company, and Cullen S. Piske, President of The Gray Casualty & Surety Company, personally known to me, being duly sworn, acknowledged that they signed the above Power of Attorney and affixed the seals of the companies as officers of, and acknowledged said instrument to be the voluntary act and deed, of their companies.

Leigh Anne Henican
Notary Public
Notary ID No. 92653
Orleans Parish, Louisiana

Leigh Anne Henican
Notary Public, Parish of Orleans State of Louisiana
My Commission is for Life

I, Mark S. Manguno, Secretary of The Gray Insurance Company, do hereby certify that the above and forgoing is a true and correct copy of a Power of Attorney given by the companies, which is still in full force and effect. IN WITNESS WHEREOF, I have set my hand and affixed the seals of the Company this 13th day of December , 2024 .

I, Leigh Anne Henican, Secretary of The Gray Casualty & Surety Company , do hereby certify that the above and forgoing is a true and correct copy of a Power of Attorney given by the companies, which is still in full force and effect. IN WITNESS WHEREOF, I have set my hand and affixed the seals of the Company this 13th day of December , 2024 .

THE GRAY INSURANCE COMPANY SEAL

THE GRAY CASUALTY & SURETY COMPANY SEAL

FLORIDA SURETY BONDS, INC. Phone 407-786-7770 Maitland, FL

This affidavit must be completed and returned by the Awarded Bidder, upon issuance of a Notice of Intent to Award by the Purchasing Division of the City of Port Orange.

LEASED EMPLOYEE AFFIDAVIT

EXHIBIT CONTRACT #_____

☑ I hereby certify that I do not utilize an employee leasing company or employ leased employees. I further agree to notify the City in the event these circumstances change.

OR

☐ I affirm that an employee leasing company provides my workers' compensation coverage. I further understand that my contract with the employee leasing company limits my workers' compensation coverage to enrolled worksite employees only. My leasing arrangement does not cover un-enrolled worksite employees, independent contractors, uninsured sub-contractors or casual labor exposure.

I hereby certify that 100% of my workers are covered as worksite employees with the employee leasing company. I certify that I do not hire any casual or uninsured labor outside the employee leasing agreement. I agree to notify the City in the event that I have any workers not covered by the employee leasing workers' compensation policy. In the event that I have any workers not subject to the employee leasing arrangement, I agree to obtain a separate workers' compensation policy to cover these workers. I further agree to provide the City with a certificate of insurance providing proof of workers' compensation coverage prior to these workers entering any City jobsite.

I further agree to notify the City if my employee leasing arrangement terminates with the employee leasing company and I understand that I am required to furnish proof of replacement workers' compensation coverage prior to the termination of the employee leasing arrangement.

I certify that I have workers' compensation coverage for all of my workers through the employee leasing arrangement specified below:

Name of Employee Leasing Company: _____

Workers' Compensation Carrier: _____

A.M. Best Rating of Carrier: _____

Inception Date of Leasing Arrangement: _____

I further agree to notify the City in the event that I switch employee leasing companies. I recognize that I have an obligation to supply an updated workers' compensation certificate to the City that documents the change of carrier.

I hereby attest that the information provided in this affidavit is accurate. In addition, I certify that I have read and understand the above statements regarding my responsibility under the workers' compensation coverage.

Name of Contractor: RCM Utilities, LLC

Signature of Owner/Officer: Melissa Moss

Melissa Moss

Title: Controller / Secretary Date: 01/13/2025

IMPORTANT: This certificate must be completed and returned by the Awarded Bidder, upon issuance of a Notice of Intent to Award by the Purchasing Department of the City of Port Orange.

HUMAN TRAFFICKING AFFIDAVIT
(SECTION 787.06, FLORIDA STATUTES)

STATE OF FLORIDA §
§
COUNTY OF VOLUSIA §

The undersigned ("Affiant"), on behalf of the entity listed below ("Entity"), after being duly sworn, hereby attests as follows:

1. My name is Melissa Moss. I am over the age of Twenty-one years old. I am the Controller (Title) of RCM Utilities, LLC (Business Name), a non- governmental entity which does business in the State of Florida, hereinafter called the "Entity."
2. I have personal knowledge of each and every statement of fact contained herein, and each and every statement of fact is true and correct.
3. Entity does not use coercion, as defined in Section 787.06, Florida Statutes, for labor or services.
4. The undersigned is an officer or representative of the entity and is authorized to execute this affidavit on behalf of the Entity.
5. Under penalties of perjury, I declare that I have read the foregoing Human Trafficking Affidavit and that the facts stated herein are true.

Further Affiant sayeth not.

Date: January 20, 2025

Signed: Melissa Moss
Print Name: Melissa Moss
Title: Controller

SUBSCRIBED AND SWORN before me by means of [_XX_] physical presence or [__] online notarization on the 20 day of January, 2025 by Melissa Moss as Controller on behalf of RCM Utilities, LLC who is personally known to me or who has produced _____ as identification.

(Notary Seal)

Notary Public, State of Florida
Printed name, commission and expiration of commission term

PRISCILLA J. JOHNSON
Commission # HH 468310
Expires November 28, 2027

This affidavit must be completed and returned by the Awarded Bidder, upon issuance of a Notice of Intent to Award by the Purchasing Division of the City of Port Orange. Please note, the City of Port Orange does not accept exemptions for Workers' Compensation coverage.

AFFIDAVIT REGARDING WORKERS' COMPENSATION

State of Florida

County of Lake

I, Melissa Moss, being duly sworn according to law, deposes and says (it, he, she, they) have accepted the Workers' Compensation laws of the State of Florida, with its supplements and amendments and has insured (its, his, her, their) liability there under accordance with the terms of sail Laws with the BITCO General Insurance Corporation Company, under the terms of Policy Number WC3753374 for a period from January 15, 2025 to January 15, 2026.

WITNESS:

By: Sandra Niedzwiecki

Name: Sandra Niedzwiecki

CONTRACTOR:

Company: RCM Utilities, LLC

By: Melissa Moss

Name/Title:

Sworn to/Affirmed and subscribed before me this 20 day of January, 2025, by Melissa Moss, who is personally known to me or who produced _____ as identification.

Priscilla Johnson

NOTARY PUBLIC – STATE OF

Type or Print Name: Priscilla Johnson

Commission No.: HH468310

Commission Expires: November 28, 2027

(Seal)

PRISCILLA J. JOHNSON
Commission # HH 468310
Expires November 28, 2027

ITB #25-01
LOWES/GATEWAY LIFT STATION (LS82) REHABILITATION
BID TABULATION

ITEM #	DESCRIPTION	UNIT OF MEASURE	ESTIMATED QUANTITY	RCM UTILITIES, LLC		U.S. WATER SERVICES CORPORATION		CLEARWATER SOLUTIONS, LLC	
				UNIT PRICE	EXTENDED PRICE	UNIT PRICE	EXTENDED PRICE	UNIT PRICE	EXTENDED PRICE
1	Mobilization/Demobilization	LS	1	$22,400.00	$22,400.00	$40,240.00	$40,240.00	$79,277.16	$79,277.16
2	Insurance, Performance and Payment Bond	LS	1	$15,000.00	$15,000.00	$7,957.00	$7,957.00	$24,000.00	$24,000.00
3	Preconstruction Video	LS	1	$1,300.00	$1,300.00	$750.00	$750.00	$1,778.56	$1,778.56
4	Construction Restoration - (site cleanup, seed and mulch)	LS	1	$12,000.00	$12,000.00	$3,042.00	$3,042.00	$13,360.46	$13,360.46
5	Lift Station Demolition, including but not limited to: - 2 suction lift pumps - Well top and internal piping - Lift Station discharge piping to existing plug valve - Sandblast concrete lift station interior - Electrical and associated conduit/piping	LS	1	$15,450.00	$15,450.00	$16,912.00	$16,912.00	$59,428.08	$59,428.08
6	Site Work (clearing and grubbing, grading, erosion control)	LS	1	$11,750.00	$11,750.00	$4,242.00	$4,242.00	$7,077.86	$7,077.86
7	Construction Testing (Pressure, Density Testing, etc.)	LS	1	$11,650.00	$11,650.00	$7,242.00	$7,242.00	$6,161.76	$6,161.76
8	Survey Layout & Record Drawings	LS	1	$4,250.00	$4,250.00	$17,460.00	$17,460.00	$7,239.56	$7,239.56
9	FDOT #57 Stone	CY	5	$1,000.00	$5,000.00	$343.00	$1,715.00	$2,148.36	$10,741.80
10	6" Concrete Pad and Driveway	CY	12	$1,700.00	$20,400.00	$561.00	$6,732.00	$1,351.60	$16,219.20
11	Lift Station Improvements, including but not limited to: - Liner - Replace lift station top and hatch - Replace interior suction piping, rails, etc. - Reduce Concrete fillet at bottom of well	LS	1	$63,550.00	$63,550.00	$76,552.00	$76,552.00	$108,991.32	$108,991.32
12	Submersible Pump (Including base elbows, anchor bolts, guide rail systems, access hatch, and startup)	EA	2	$36,575.00	$73,150.00	$84,106.00	$168,212.00	$36,264.63	$72,529.26
13	6-in Above Ground Valve Assembly (Piping, Fittings, Valves, etc.)	LS	1	$64,650.00	$64,650.00	$57,595.00	$57,595.00	$55,862.27	$55,862.27
14	6-in PVC Force Main (Including Fittings, Restraints, Adapters, etc.)	LS	30	$220.00	$6,600.00	$627.00	$18,810.00	$336.10	$10,083.00
15	6-in HDPE Force Main - Bypass Piping (Including Fittings, Restraints, Adapters, Camlocks, etc.)	LF	105	$345.00	$36,225.00	$308.00	$32,340.00	$189.60	$19,908.00
16	6-in Plug Valve	EA	2	$5,325.00	$10,650.00	$6,465.00	$12,930.00	$2,490.12	$4,980.24
17	Connection to Existing 8-in Force Main	EA	1	$16,750.00	$16,750.00	$13,486.00	$13,486.00	$3,471.09	$3,471.09
18	Hose Bibb Relocation	EA	1	$1,900.00	$1,900.00	$1,361.00	$1,361.00	$2,913.01	$2,913.01
19	Reclaim Piping Relocation	EA	1	$1,900.00	$1,900.00	$8,779.00	$8,779.00	$3,607.45	$3,607.45
20	Bypass Operations	LS	1	$26,650.00	$26,650.00	$18,534.00	$18,534.00	$70,561.67	$70,561.67
21	6-ft Viny-Coated Chain-link Fence	LF	125	$106.00	$13,250.00	$101.00	$12,625.00	$76.19	$9,523.75
22	Electrical I&C	LS	1	$235,500.00	$235,500.00	$201,972.00	$201,972.00	$218,955.48	$218,955.48
23	Permitting (Allowance)	LS	1	$80,000.00	$80,000.00	$80,000.00	$80,000.00	$80,000.00	$80,000.00
				TOTAL PRICE:	$749,975.00	TOTAL PRICE:	$809,488.00	TOTAL PRICE:	$886,670.98

				SANPIK INC		DANUS UTILITIES, INC.		NON RESPONSIVE ALL STATE CIVIL CONSTRUCTION, INC	
ITEM #	DESCRIPTION	UNIT OF MEASURE	ESTIMATED QUANTITY	UNIT PRICE	EXTENDED PRICE	UNIT PRICE	EXTENDED PRICE	UNIT PRICE	EXTENDED PRICE
1	Mobilization/Demobilization	LS	1	$125,000.00	$125,000.00	$50,000.00	$50,000.00	$35,000.00	$35,000.00
2	Insurance, Performance and Payment Bond	LS	1	$50,000.00	$50,000.00	$17,500.00	$17,500.00	$39,000.00	$39,000.00
3	Preconstruction Video	LS	1	$2,500.00	$2,500.00	$2,000.00	$2,000.00	$1,000.00	$1,000.00
4	Construction Restoration - (site cleanup, seed and mulch)	LS	1	$15,000.00	$15,000.00	$8,000.00	$8,000.00	$5,000.00	$5,000.00
5	Lift Station Demolition, including but not limited to: - 2 suction lift pumps - Well top and internal piping - Lift Station discharge piping to existing plug valve - Sandblast concrete lift station interior - Electrical and associated conduit/piping	LS	1	$75,000.00	$75,000.00	$8,500.00	$8,500.00	$38,000.00	$38,000.00
6	Site Work (clearing and grubbing, grading, erosion control)	LS	1	$15,000.00	$15,000.00	$7,500.00	$7,500.00	$8,000.00	$8,000.00
7	Construction Testing (Pressure, Density Testing, etc.)	LS	1	$7,500.00	$7,500.00	$5,500.00	$5,500.00	$5,000.00	$5,000.00
8	Survey Layout & Record Drawings	LS	1	$15,000.00	$15,000.00	$12,000.00	$12,000.00	$8,000.00	$8,000.00
9	FDOT #57 Stone	CY	5	$450.00	$2,250.00	$900.00	$4,500.00	$350.00	$1,750.00
10	6" Concrete Pad and Driveway	CY	12	$1,250.00	$15,000.00	$1,000.00	$12,000.00	$675.00	$8,100.00
11	Lift Station Improvements, including but not limited to: - Liner - Replace lift station top and hatch - Replace interior suction piping, rails, etc. - Reduce Concrete fillet at bottom of well	LS	1	$125,000.00	$125,000.00	$325,452.00	$325,452.00	$280,000.00	$280,000.00
12	Submersible Pump (Including base elbows, anchor bolts, guide rail systems, access hatch, and startup)	EA	2	$122,000.00	$244,000.00	$55,000.00	$110,000.00	$180,000.00	$360,000.00
13	6-in Above Ground Valve Assembly (Piping, Fittings, Valves, etc.)	LS	1	$55,000.00	$55,000.00	$70,000.00	$70,000.00	$78,560.00	$78,560.00
14	6-in PVC Force Main (Including Fittings, Restraints, Adapters, etc.)	LS	30	$436.00	$13,080.00	$1,500.00	$45,000.00	$240.00	$7,200.00
15	6-in HDPE Force Main - Bypass Piping (Including Fittings, Restraints, Adapters, Camlocks, etc.)	LF	105	$290.00	$30,450.00	$400.00	$42,000.00	$400.00	$42,000.00
16	6-in Plug Valve	EA	2	$9,000.00	$18,000.00	$3,200.00	$6,400.00	$8,000.00	$16,000.00
17	Connection to Existing 8-in Force Main	EA	1	$11,000.00	$11,000.00	$1.00	$1.00	$4,500.00	$4,500.00
18	Hose Bibb Relocation	EA	1	$3,000.00	$3,000.00	$5,500.00	$5,500.00	$1,500.00	$1,500.00
19	Reclaim Piping Relocation	EA	1	$11,000.00	$11,000.00	$1.00	$1.00	$5,000.00	$5,000.00
20	Bypass Operations	LS	1	$36,000.00	$36,000.00	$40,000.00	$40,000.00	$45,600.00	$45,600.00
21	6-ft Viny-Coated Chain-link Fence	LF	125	$175.00	$21,875.00	$80.00	$10,000.00	$180.00	$22,500.00
22	Electrical I&C	LS	1	$117,000.00	$117,000.00	$220,000.00	$220,000.00	$105,985.00	$105,985.00
23	Permitting (Allowance)	LS	1	$80,000.00	$80,000.00	$80,000.00	$80,000.00	$80,000.00	$80,000.00
				TOTAL PRICE:	$1,087,655.00	TOTAL PRICE:	$1,081,854.00	TOTAL PRICE:	$1,197,695.00

				G3 CONTRACTING INC DBA INDUSTRY STANDARD		NON RESPONSIVE C & R TECHNICAL, LLC	
ITEM #	DESCRIPTION	UNIT OF MEASURE	ESTIMATED QUANTITY	UNIT PRICE	EXTENDED PRICE	UNIT PRICE	EXTENDED PRICE
1	Mobilization/Demobilization	LS	1	$45,500.00	$45,500.00		
2	Insurance, Performance and Payment Bond	LS	1	$33,000.00	$33,000.00		
3	Preconstruction Video	LS	1	$2,000.00	$2,000.00		
4	Construction Restoration - (site cleanup, seed and mulch)	LS	1	$13,400.00	$13,400.00		
5	Lift Station Demolition, including but not limited to: - 2 suction lift pumps - Well top and internal piping - Lift Station discharge piping to existing plug valve - Sandblast concrete lift station interior - Electrical and associated conduit/piping	LS	1	$89,400.00	$89,400.00		
6	Site Work (clearing and grubbing, grading, erosion control)	LS	1	$10,200.00	$10,200.00		
7	Construction Testing (Pressure, Density Testing, etc.)	LS	1	$15,440.00	$15,440.00		
8	Survey Layout & Record Drawings	LS	1	$8,200.00	$8,200.00		
9	FDOT #57 Stone	CY	5	$956.00	$4,780.00		
10	6" Concrete Pad and Driveway	CY	12	$2,000.00	$24,000.00		
11	Lift Station Improvements, including but not limited to: - Liner - Replace lift station top and hatch - Replace interior suction piping, rails, etc. - Reduce Concrete fillet at bottom of well	LS	1	$169,400.00	$169,400.00		
12	Submersible Pump (Including base elbows, anchor bolts, guide rail systems, access hatch, and startup)	EA	2	$106,400.00	$212,800.00		
13	6-in Above Ground Valve Assembly (Piping, Fittings, Valves, etc.)	LS	1	$53,800.00	$53,800.00		
14	6-in PVC Force Main (Including Fittings, Restraints, Adapters, etc.)	LS	30	$920.00	$27,600.00		
15	6-in HDPE Force Main - Bypass Piping (Including Fittings, Restraints, Adapters, Camlocks, etc.)	LF	105	$370.00	$38,850.00		
16	6-in Plug Valve	EA	2	$11,000.00	$22,000.00		
17	Connection to Existing 8-in Force Main	EA	1	$7,600.00	$7,600.00		
18	Hose Bibb Relocation	EA	1	$4,000.00	$4,000.00		
19	Reclaim Piping Relocation	EA	1	$22,400.00	$22,400.00		
20	Bypass Operations	LS	1	$36,900.00	$36,900.00		
21	6-ft Viny-Coated Chain-link Fence	LF	125	$144.00	$18,000.00		
22	Electrical I&C	LS	1	$82,450.00	$82,450.00		
23	Permitting (Allowance)	LS	1	$80,000.00	$80,000.00		
				TOTAL PRICE:	$1,021,720.00	TOTAL PRICE:	$0.00

LEGEND:

LS - Lump Sum
EA - Each
LF - Linear Feet
CY - Cubic Yards

Joseph Castro
BUYER

WITNESS

NOTICE OF INTENT TO AWARD

January 13, 2025

ITB #25-01

LOWES/GATEWAY LIFT STATION (LS82) REHABILITATION

On December 20, 2024 the City of Port Orange received six (6) responsive submittals for ITB #25-01 Lowes/Gateway Lift Station (LS82) Rehabilitation.

After review of the responses, City Staff has made a recommendation to award to the following firm:

RCM UTILITIES, LLC

This recommendation of award will be presented to City Council for approval in the near future. Interested parties may review the City Council agenda at: https://www.port-orange.org/776/Agendas-and-Minutes.

Joseph Castro
Buyer

"Failure to file a protest within the time prescribed in section 120.57(3), Florida Statutes or failure to post the bond or other security required by law within the time allowed, shall constitute a waiver of proceedings under Chapter 120, Florida Statutes." The 72-hour posting requirement will elapse on January 16, 2025 at 9:00AM EST.

CITY OF PORT ORANGE, FLORIDA

INVITATION TO BID
ITB #25-01
LOWES/GATEWAY LIFT STATION (LS82) REHABILITATION

City of Port Orange
Purchasing Division
Prepared by: Joseph Castro
Release Date: November 8, 2024

Bid Due Date & Time: December 13, 2024 @ 2:30 PM

City of Port Orange, Florida
1000 City Center Circle, Port Orange, FL 32129
(386) 506-5717
purchdiv@port-orange.org ; www.port-orange.org

Legal Notice to Bidders

ITB #25-01
LOWES/GATEWAY LIFT STATION (LS82) REHABILITATION

Notice is hereby given that the City of Port Orange is soliciting bids for ITB #25-01 Lowes/Gateway Lift Station (LS82) Rehabilitation. Bids will be accepted in the City Clerk's office, Port Orange City Hall, 1000 City Center Circle, Port Orange, Florida 32129 until **2:30 PM Eastern Standard Time (EST) on December 13, 2024** which may be amended by addendum issued by the City. All untimely bids will not be considered and will be returned to the Bidder unopened. All bids will be evaluated to ensure they contain all required forms in order to deem the Bidder responsive or non-responsive. **Bids will be opened and read aloud at 2:30 PM EST in Council Chambers.**

There will be a non-mandatory pre-bid conference for the project at **10:00 AM EST** on **November 22, 2024** at City Hall, Council Chambers (1st floor), 1000 City Center Circle, Port Orange, FL 32129. All attendees to the pre-bid conference must sign in. The representative of each Bidder shall be an authorized employee of the Bidder and MUST sign in accordingly. Bidders are urged to obtain bid documents and familiarize themselves with the documents prior to the pre-bid conference.

A Bid Guarantee in the form of a Bid Bond executed by the Bidder and an acceptable surety or a certified check or bank draft payable to the City of Port Orange, Florida in an amount equal to five percent (5%) of the proposed bid must be submitted with each bid. If awarded, the Bidder must also be able to obtain both payment and performance bonds equal to one hundred percent (100%) of project value from a surety company licensed in Florida and must submit proof of their present bonding capacity with their submitted bid package in the form of a current (not older than 3 months) letter from Bidder's bonding agent. Bidder's failure to include the bonding capacity letter with bid package may result in rejection of Bidder's submittal.

DESCRIPTION: ***Perform full mechanical & electrical upgrades to the Lowes/Gateway (LS82) Lift Station.***

Bidders must be a commercial entity licensed to do business in the State of Florida and perform the services identified herein. Bidders must be properly registered and licensed to provide the services identified in the scope of work by all applicable state and local agencies.

All bids are solicited and shall be made pursuant to the Code of Ordinances, City of Port Orange, Chapter 2, Article VI, Division 2, Section 2-263, and all bids will be evaluated in accordance with the provisions thereof. Code of Ordinances, City of Port Orange is on file in the Office of the City Clerk, City Hall, 1000 City Center Circle, Port Orange, Florida 32129 and at www.municode.com.

Copies of the bid documents, requirements, scope of service and all other pertinent information necessary to submit a complete package may be obtained electronically from the City of Port Orange Purchasing web page at www.port-orange.org/bids.aspx and DemandStar via their website at www.demandstar.com .

All questions shall be directed **in writing** to Buyer, Joseph Castro jcastro@port-orange.org and purchdiv@port-orange.org and reference "Questions on ITB #25-01 Lowes/Gateway Lift Station (LS82) Rehabilitation" in the subject line. Last day for questions will be **November 29, 2024 by 5:00 PM EST**.

The Cone of Silence begins with the issuance of the solicitation document and continues until City Council meets to make a final decision on an award. During this time Bidders, suppliers, contractors and sub-contractors are prohibited from all communications regarding the solicitation with City staff, City consultants, City legal counsel, City agents, or elected officials. Any Bidder who initiates any discussions or attempts to influence a member or members of the aforementioned shall be disqualified from continued participation in the procurement process with regard to that particular solicitation. While the Cone of Silence is in effect, all communications from potential Bidders, suppliers, contractors and sub-contractors must be directed to the Purchasing Division @ purchdiv@port-orange.org.

Cut along the outer border and affix this label to the outside of your sealed bid envelope/package to identify it as a "Sealed Bid". Be sure to include the name of the company submitting the bid where requested.

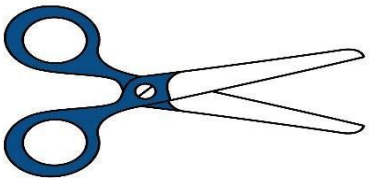

SEALED BID – DO NOT OPEN

SEALED BID NO.: **ITB #25-01**

BID TITLE: **LOWES/GATEWAY LIFT STATION (LS82) REHABILITATION**

DUE DATE/TIME: **DECEMBER 13, 2024 AT 2:30 PM EST**

SUBMITTED BY: _____
(Name of Company)

BIDDER'S ADDRESS: _____

_____

DELIVER TO: **CITY OF PORT ORANGE CITY CLERK'S OFFICE**
ATTN: JOSEPH CASTRO, BUYER
PURCHASING DIVISION
1000 CITY CENTER CIRCLE
PORT ORANGE, FL 32129

DATE/TIME RECEIVED:_____
(To be stamped by Clerk's Office)

Contents

SECTION 1 – PURPOSE AND OVERVIEW 5
SECTION 2 – INSTRUCTIONS TO BIDDERS 6
SECTION 3 – SCOPE OF WORK 10
SECTION 4 – STANDARD PURCHASE DEFINITIONS 11
SECTION 5 – GENERAL TERMS AND CONDITIONS. 14
SECTION 6 – SPECIAL REQUIREMENTS/INSTRUCTIONS 34
SECTION 7 – REQUIRED FORMS 36
FORM 7.1 – BID SUBMITTAL CHECKLIST 36
FORM 7.2 – BIDDER'S ACKNOWLEDGEMENT 37
FORM 7.3 – ADDENDUM AND CHANGE ORDER PROCEDURE ACKNOWLEDGEMENT 38
FORM 7.4 – DRUG-FREE PREFERENCE STATEMENT 39
FORM 7.5 – SWORN STATEMENT ON PUBLIC ENTITY CRIMES 40
FORM 7.6 – ANTI-COLLUSION 41
FORM 7.7 – STATEMENT OF BIDDER'S QUALIFICATIONS 42
FORM 7.8 – PROFESSIONAL REFERENCES FOR PREVIOUS EXPERIENCE 43
FORM 7.9 – LISTING OF SUBCONTRACTORS 45
FORM 7.10 - SCRUTINIZED COMPANIES CERTIFICATION 46
FORM 7.11 – LOCAL BUSINESS AFFIDAVIT OF ELIGIBILITY 47
FORM 7.12 – E-VERIFY AFFIDAVIT 48
FORM 7.13 – CERTIFICATION REGARDING DEBARMENT 49
FORM 7.14 - AFFIDAVIT OF COMPLIANCE WITH F.S. 287.138 50
FORM 7.15 – NO SUBMITTAL RESPONSE 51
APPENDIX A - 44 C.F.R. PART 18 CERTIFICATION REGARDING LOBBYING 52
(ATTACHMENT 1) – SCHEDULE OF UNIT PRICING 53

BID BOND 54
PAYMENT & PERFORMANCE BOND (for informational purposes only) 56
LEASED EMPLOYEE AFFIDAVIT (for informational purposes only) 59
AFFIDAVIT REGARDING WORKERS' COMPENSATION (for informational purposes only) 60
HUMAN TRAFFICKING AFFIDAVIT (for informational purposes only) 61
CITY OF PORT ORANGE CONTRACT DOCUMENTS (for informational purposes only) 62

SECTION 1 – PURPOSE AND OVERVIEW

The purpose of this Invitation to Bid (ITB) is to solicit competitive sealed bids from Firms or Companies (Bidders) for rehabilitation of the Lowes/Gateway Lift Station. The awarded firm is required to replace the existing dry pit pumps with two submersible pumps, pour concrete pads and driveway, install bypass piping, place gravel around the lift station, build new fencing, and replace sod. Concrete, soil, and gravel replacement is required at all disturbed areas.

It is the intent and purpose of the City of Port Orange (City) that this Invitation to Bid promotes competitive selection. It shall be the Bidder's responsibility to advise the Purchasing Division of any language, requirements, etc. or any combination thereof that inadvertently restricts or limits the requirements stated in this ITB to a single source.

[Remainder of page left intentionally blank]

SECTION 2 – INSTRUCTIONS TO BIDDERS

Bidders desiring to provide services, as described herein shall submit sealed bids, including one (1) original and one (1) digital (flash drive) version in PDF format, in conformance with the detailed submittal instructions.

TIMELINE (Eastern Standard Time)

The City reserves the right to alter dates as needed.

DESCRIPTION	DATE
Date of distribution	November 8, 2024
Non-mandatory pre-bid conference	November 22, 2024 @ 10:00AM
Deadline for questions	November 29, 2024 by 5:00 PM
Addendum posting (if needed)	December 6, 2024 by 5:00 PM
Bids due	December 13, 2024 by 2:30 PM
City Council meeting for approval of Recommendation of Award	To Be Determined

Bids must be delivered in a sealed envelope/package and delivered to:

City of Port Orange City Clerk's Office
Attn: Joseph Castro, Buyer
Purchasing Division
1000 City Center Circle
Port Orange, FL 32129

Sealed bids must be delivered no later than the date and time listed in the Timeline above. All times referenced are local time. Bids shall be sealed and Bidders shall clearly indicate on the outside of their bid the following:

a. Invitation to Bid (ITB) Number and Title
b. Date of Opening
c. Name of Bidder
d. Address of Bidder

Due to the timing of mail service, the City cautions Bidders to ensure actual delivery of bids to the City prior to the deadline set for receiving bids. Carrier and hand deliveries of bids will be accepted in the City Clerk's Office, Port Orange City Hall, 1000 City Center Circle, Port Orange, Florida 32129 until the date and time referenced in the Timeline above or as amended by addendum issued by the City. Bids received after the established deadline shall not be considered.

Bidders are cautioned that they are responsible for delivery to the specific location cited above. Therefore, if your bid, proposal, statement or quotation is delivered by an express mail carrier or by any other means, it is your responsibility to ensure delivery to the above address. The City will not be responsible for deliveries made to any place other than the specified address.

Offers by telephone or email shall not be accepted. Also, Bidders are instructed NOT to fax their bid package. **Faxed bids will be rejected as non-responsive regardless of where or when the fax is received.**

All bids will be opened publicly and the names of all Bidders shall be read aloud. All conferences and meetings regarding this ITB are recorded electronically (audio only). The City of Port Orange reserves the right to reject any or all bids or parts of bids if it is in the best interest of the City.

PRE-BID CONFERENCE

There will be a non-mandatory pre-bid conference on the date and time referenced in the Timeline above at City Hall, Council Chambers (1st Floor), 1000 City Center Circle, Port Orange, Florida 32129. All attendees to the non-mandatory pre-bid conference MUST sign in. The representative of each Bidder shall be an authorized employee of the Bidder and must sign in accordingly.

QUESTIONS REGARDING THIS ITB

All questions shall reference ''ITB #25-01 Lowes/Gateway Lift Station (LS82) Rehabilitation" in the subject line. All questions concerning this ITB shall be submitted in writing no later than the date and time referenced in the Timeline above to:

Joseph Castro, Buyer
1000 City Center Circle
Port Orange, FL 32129
jcastro@port-orange.org
purchdiv@port-orange.org

ADDENDA

The City will issue responses to inquiries and any other corrections or amendments it deems necessary in written addenda issued prior to the bid due date. Bidders should not rely on any representations, statements or explanations other than those made in this ITB or in any addendum to this ITB. Where there appears to be a conflict between the ITB and any addenda issued, the last addendum issued will prevail. The Bidder should verify prior to submitting a bid that all addenda have been received and reviewed. All addenda will be published on the City Purchasing web page at www.port-orange.org/bids.aspx and the DemandStar website at www.demandstar.com.

The City of Port Orange reserves the right to consider the omission of an Acknowledgment of Addendum as cause for rejection of the ITB submittal.

This provision exists solely for the convenience and administrative efficiency of the City of Port Orange. No Bidder or other third party gains any rights by virtue of this provision or the application thereof, nor shall any Bidder or third party have any standing to sue or cause of action arising therefrom.

CLARIFICATIONS

It is the Bidder's responsibility to become familiar with and fully informed regarding the terms, conditions and specifications of this ITB. Lack of understanding and/or misinterpretation of any portions of this ITB shall not be cause for withdrawal of your bid after opening or for subsequent protest of award.

MINIMUM QUALIFICATIONS

Bidders shall be licensed to do business in the State of Florida. Submit Sunbiz report showing your company registered as "Active".

Bidders must provide a minimum of three (3) verifiable references from similar scopes of work as identified in this ITB on the provided *Professional References* form (Form 7.8). Failure to provide verifiable references may cause the Bidder to be deemed non-responsive. The City of Port Orange is not to be used as a reference.

NO LOBBYING

All Bidders are hereby placed on notice that the City of Port Orange Council, City Employees/Staff, nor Members of the Evaluation Committee (with the exception of the City of Port Orange Purchasing Division personnel designated to receive requests for interpretations or corrections) are not to be lobbied, directly or indirectly either individually or collectively, regarding this ITB. During the entire procurement process, all Bidders and their subcontractors, sub-consultants, or agents are hereby placed on notice that they are not to contact any persons listed above for such purposes as holding meetings of introduction, dinners, etc. if they intend to submit or have submitted bids for this project. Any Bidder contacting individuals mentioned herein in violation of this warning may automatically be disqualified from further consideration for this ITB.

SCHEDULE OF UNIT PRICING

Schedule of Unit Pricing is to be completed as directed and without modification and returned as part of the ITB submittal prior to the ITB deadline for submission. Failure to fill out the Schedule of Unit Pricing as directed and without modification may negatively affect the evaluation of your bid.

EXCEPTIONS TO SPECIFICATIONS
If taking exception to any portion of the ITB specifications, the Bidder must indicate those exceptions as stated on the *Bidder's Acknowledgement* (Form 7.2).

BID SUBMISSION AND WITHDRAWAL
Unless otherwise specified, Bidder shall use the forms supplied by the Purchasing Division. Bids, once opened, become the property of the City, cannot be withdrawn, and will not be returned to the Bidders. Upon opening, bids become subject to public disclosure in accordance with Chapter 119, Florida Statutes.

CORRECTION OF BIDS
Correction of inadvertently erroneous bids shall be permitted up to the time of ITB opening. Bidders shall not be allowed to modify their bids after the opening time and date.

WITHDRAWAL OF BIDS
NO bid shall be withdrawn for a period of one-hundred-twenty (120) days subsequent to the bid opening without the consent of the City of Port Orange. Negligence on the part of the Bidder in preparing their bid confers no right of withdrawal or modification after the bid has been opened at the appointed time and place by the City of Port Orange. Any such withdrawn bid shall not be resubmitted.

OPENING OF BIDS
Bids will be received until the date and time stated in this ITB and will be publicly opened and read at the place, time and date stated. The City bears no responsibility for the premature opening of a bid not properly addressed and identified.

LITIGATION HISTORY
The City will consider a Bidder's litigation history information in its review and determination of responsibility. All Bidders are required to disclose to the City all "material" cases filed, pending, or resolved during the last five (5) years prior to the solicitation response due date, whether such cases were brought by or against the Bidder, any parent or subsidiary of the Bidder, or any predecessor organization. If the Bidder is a joint venture, the information provided should encompass the joint venture (if it is not newly formed for purposes of responding to the solicitation) and each of the entities forming the joint venture. Although the review of a Bidder's litigation history is an issue of responsibility, the failure to provide litigation history as required in the Evaluation Criteria may result in a recommendation of non- responsive by the Purchasing Manager.

DEBARMENT HISTORY
The City will consider a Bidder's debarment history information in its review and determination of responsibility. All Bidders are required to disclose to the City all cases of debarment filed, pending, or resolved by the City or other public entity during the last five (5) years prior to the solicitation response due date, whether such actions were brought by or against the Bidder, any parent or subsidiary of the Bidder, or any predecessor organization. If the Bidder is a joint venture, the information provided should encompass the joint venture (if it is not newly formed for purposes of responding to the solicitation) and each of the entities forming the joint venture. Although the review of a Bidder's debarment history is an issue of responsibility, the failure to provide debarment history as required on the *Certification Regarding Debarment, Suspension and Other Responsibility Matters* (contained herein) may result in a recommendation of non-responsive by the Purchasing Manager.

REJECTION OF BIDS
The City reserves the right to reject any and/or all bids when such rejection is in the best interest of the City.

BIDS MAY BE REJECTED AND/OR BIDDER(S) DISQUALIFIED FOR THE FOLLOWING REASONS:
(a) Failure to update the information on file including address, product, service or business descriptions.
(b) Failure to perform according to contract provisions.
(c) Conviction in a court of law of any criminal offense in connection with the conducting of business.
(d) Evidence of a violation of any federal or state antitrust law based on the submission of bids or proposals, or the awarding of contracts.

(e) Evidence that the Bidder has attempted to give a City employee a gratuity of any kind for the purpose of influencing a recommendation or decision in connection with any part of the City's purchasing activity.
(f) Other reasons deemed appropriate by the City.

OWNERSHIP OF DOCUMENTS

All documents resulting from this solicitation will become the sole property of the City of Port Orange. The Bidder must meet all requirements for retaining public records and transfer, at no cost, to the City all public records in the possession of the Bidder upon termination of this Agreement and destroy any duplicate public records that are exempt or confidential and exempt from public records disclosure requirements. All records stored electronically must be provided to the City in a format that is compatible with the information technology systems of the City.

AMERICANS WITH DISABILITIES ACT (ADA)

If you need special services provided under the Americans with Disabilities Act, contact the ADA Coordinator in our Human Resources office at 386-506-5560 at least 48 hours before the scheduled event.

REQUIRED DOCUMENTS FOR AWARDED BIDDER

The awarded Bidder shall return all the required post-award documents within 10 days after the issuance of the Notice of Intent to Award in order to execute the contract.

[Remainder of page left intentionally blank]

SECTION 3 – SCOPE OF WORK

SCOPE OF WORK:

Replace existing dry pit pumps with two submersible pumps, pour concrete pads and driveway, install bypass piping, place gravel around the lift station, build new fencing, and replace sod. Concrete, soil, and gravel replacement at all disturbed areas.

Please refer to Attachment No.2 Lowes Gateway Lift Station Rehabilitation Technical Specifications and Attachment No.3 Lowes Gateway Lift Station 100% Drawings documents on the City's webpage@www.port-orange.org/bids.aspx and DemandStar@www.demandstar.com.

[Remainder of page left intentionally blank]

SECTION 4 – STANDARD PURCHASE DEFINITIONS

The City will use the following definitions in instructions to Bidders, terms and conditions, special provisions, technical specifications and any other solicitation documents.

1. **Addendum** is a formal written document, released prior to the public opening that modifies any aspect of a Solicitation. Plural: Addenda
2. **Alternate Bid** means multiple bids with substantive variations from the same Bidder in response to a Solicitation.
3. **Amendment** is a formal written agreement, signed by both parties, that modifies an existing contractual agreement.
4. **Appropriate, Appropriated, or Appropriation** means the adoption by the City Council of the City of a budget fora fiscal year that includes payments to be made under the Contract during the respective fiscal year.
5. **Best Value** means the highest overall value to the City based on factors that include, but are not limited to, price, quality, design, and workmanship.
6. **Bid** is a complete, properly signed response to an Invitation to Bid, which if accepted, would bind the Bidder to perform the resultant Contract.
7. **Bid Guaranty (Bid Bond)** guarantees that the Bidder (a) will not withdraw the bid within the period specified for acceptance, and (b) will execute a Contract and furnish required bonds and any necessary insurance within the time specified in the Solicitation, unless a longer time is allowed by the City. The guarantee will be returned to the Bidder upon execution of a Contract.
8. **Bidder or Proposer** is a person, firm, or entity that that submits a Response to a Solicitation. Any Bidder/Proposer may be represented by an agent after submitting evidence demonstrating the agent's authority. The agent cannot certify as to his own agency status.
9. **City** means the City of Port Orange.
10. **Competitive Negotiation** means a method for acquiring goods, services, and construction for public use in which discussions or negotiations may be conducted with responsible offerers who submit Responses through a Request for Proposals, Request for Statements of Qualifications, or Invitation to Negotiate.
11. **Competitive (Formal) Solicitation** is the process of requesting and receiving two or more sealed bids, proposals, statements of qualifications or replies submitted by responsive Bidders/Proposers in accordance with the terms of a competitive process, regardless of the method of procurement.
12. **Competitive Range** means the responsive submissions that meet the evaluation criteria and are considered to be reasonably susceptible of award.
13. **Construction** means the process of building, repairing, improving, and alterations, conversion or extension of building, parks, utilities, streets or other improvements or alterations to real property.
14. **Contract** is a written agreement or purchase order issued for the purchase of goods or services.
15. **Contractor** means the person, firm or entity selling goods or services to the City under a Contract.
16. **Deliverables** means the goods, products, materials, and/or services to be provided to the City by a Bidder.
17. **Due Date** means the date and time specified for receipt of Responses to a Solicitation.
18. **End User** is a person, program, agency, or other eligible user who uses a contract to purchase a commodity or contractual service.
19. **Evaluation Committee/Team** is a temporary group of City personnel who are responsible for the evaluation of proposals, statements of qualifications or replies as part of a Request for Proposals (RFP), Request for Submission of Qualifications (RFSQ), or Invitation to Negotiate (ITN), or competitive grant process.
20. **Evaluator** is a member of the evaluation committee/team.
21. **Goods** are supplies, materials, or equipment.
22. **Intent to Award** is a document, published on DemandStar, that informs the public and respondents of the City's decision to award a contract pursuant to a previously issued competitive solicitation.
23. **Invitation to Bid (ITB) or Bid** means a formal request to prospective Bidders requesting pricing for a specified Good or Service which has been advertised for bid in a newspaper.
24. **Invitation to Negotiate (ITN)** means a formal request to prospective proposers requesting proposed specifications and pricing of a product and/or service which has been advertised for replies in a newspaper.
25. **Issues** means points, matters, or concerns to be addressed during negotiations.

26. **Lead Negotiator** is the negotiator responsible for leading and facilitating the formal negotiation discussions and selecting other required negotiation team members. Is often the "driver of change" and seeks alternatives/options.
27. **Lowest Responsible Bid** means the responsive bid meeting all requirements of the specifications, terms, and conditions of the Invitation to Bid resulting in the lowest cost to the City in a total cost concept or based solely on price, taking into consideration the financial and practical ability of the Bidder to perform the Contract, past performance of the Bidder, and compliance with all City ordinances concerning the purchasing process.
28. **Lowest Responsible Bidder** means the Bidder submitting lowest responsible bid.
29. **Negotiation Team** is a temporary group of City personnel who are responsible for negotiations as part of an Invitation to Negotiate (ITN).
30. **Negotiator** is a member of the negotiation team.
31. **Non-Professional Services** are services performed that are not of a professional nature such as lawn care, security, janitorial, etc.
32. **Offer** means a complete signed Response submitted to the City in response to a Solicitation including, but not limited to, a bid submitted in response to an Invitation to Bid, a Proposal submitted in response to a Request for Proposal, a Quote submitted in response to a Request for Quotation, a Statement of Qualifications and interest submitted in response to a Request for Statements of Qualifications, or a Reply submitted in response to an Invitation to Negotiate.
33. **DemandStar** is the official online repository for all City competitive solicitations.
34. **Outlier** is a bid, offer, or proposal which is determined by the Purchasing Director or Manager to be significantly dissimilar to or inconsistent with, competing bids or offers.
35. **Pre-Bid/Proposal/Statement/Reply Conference** means a meeting conducted by the Purchasing Office, held in order to allow Bidders/Proposers to ask questions about the proposed Contract and particularly the Contract specifications with the City department requesting the goods/services.
36. **Price Analysis** is an evaluation of the total cost of a contract in order to determine if the price is reasonable.
37. **Procurement (Process)** is a term used in the governmental sector for the combined functions of acquiring (purchasing) needed goods and/or services, receiving and inspection, inventory management, contract administration, and disposal/surplus.
38. **Professional Services** means those services within the scope of the practice of architecture, professional engineering, landscape architecture, or registered surveying and mapping, as defined by the laws of the state, or those performed by any architect, professional engineer, landscape architect, or registered surveyor and mapper in connection with his or her professional employ mentor practice.
39. **Protest** is a formalized process by which respondents have an opportunity to challenge a procurement practice or contract award.
40. **Proposal** is a complete, properly signed Response to a Request for Proposal, based on performance that is offered rather than on that of price alone, which if accepted, would bind the Proposer to perform the resultant Contract.
41. **Purchase Order** is an order placed by the Purchasing Division for the purchase of Goods or Services written on the City's standard Purchase Order form and which, when accepted by the Bidder, becomes a contract. The Purchase Order is the Bidder's authority to deliver and invoice the City for Goods or Services specified, and the City's commitment to accept the Goods or Services for an agreed upon price.
42. **Request for Proposal (RFP)** means a formal request to prospective proposers requesting qualifications of the proposer and pricing for a specified Good or Service which has been advertised for Proposal in a newspaper.
43. **Request for Statement of Qualifications (RFSQ)** means a formal request to prospective proposers requesting statements of qualifications pursuant to Florida Statute 287.055 "Consultant's Competitive Negotiation Act" which has been advertised for Statement in a newspaper.
44. **Respondent** means an entity that has (or will, i.e. "prospective respondents") submitted a response to a competitive solicitation conducted to create a contractual relationship for the provision of commodities or services.

45. **Response/Submission** means all materials submitted to the City by a respondent as part of a solicitation. A response may be called a bid, proposal, statement of qualifications, or a reply, depending on the type of competitive solicitation being issued.
46. **Responsible (Bidder)** is a Bidder who has the capability in all respects to fully perform the contract requirements and the integrity and reliability that will assure good faith performance.
47. **Responsive (Bidder)** is a Bidder that has submitted a bid, proposal, statement of qualifications, or reply that conforms in all material respects to the solicitation.
48. **Scope** means the extent of the area or subject matter that something deals with or to which it is relevant.
49. **Scope of Work** means a description of the work activities, deliverables, and/or timeline that a Bidder must execute in terms of delivering specific commodities or in performance of contractual services.
50. **Services** include all work or labor performed for the City on an independent contractor basis other than construction.
51. **Solicitation** means a formal request, as applicable, for prospective Bidders/Proposers to submit responses to an Invitation to Bid, Request for Proposal, Request for Qualifications, Invitation to Negotiate, or a Request for Quotation.
52. **Solicitation Document** means a document, or collection of documents, either paper or electronic, that contains all information required to conduct a competitive procurement project according to § 287.057, Florida Statutes.
53. **Stakeholder** means an individual, who is not likely to become a supplier, who has an interest in the commodities/contractual services needed.
54. **Subcontractor** means a person, firm or entity providing goods or services to a Bidder/Proposer to be used in the performance of the Bidder/Proposer's obligations under the Contract.
55. **Subject Matter Expert** means a person who has working or expert knowledge about a particular topic or field.
56. **Unbalanced Bid** means a bid that is based on prices which are significantly less than cost for some bid items and significantly more than cost for others.

[Remainder of page left intentionally blank]

SECTION 5 – GENERAL TERMS AND CONDITIONS

These instructions are standard for all contracts for commodities or services issued through the City of Port Orange Purchasing Division. General Requirements apply to all advertised Solicitations; however, **these may be superseded, in whole or in part, by the SPECIAL PROVISIONS/INSTRUCTIONS OR OTHER DATA CONTAINED HEREIN.**

1. **ACCEPTANCE BY CITY**

   The City shall have a reasonable time (but not less than 30 days) after receipt to inspect the goods and services tendered by the Bidder. The City at its option may reject all or any portion of such goods or services which do not, in City's sole discretion, comply in every respect with all terms and conditions of the contract. The City may elect to reject the entire goods and services tendered even if only a portion thereof is nonconforming. If the City elects to accept nonconforming goods and services, the City, in addition to its other remedies, shall be entitled to deduct a reasonable amount from the price thereof to compensate the City for the nonconformity. Any acceptance by the City, even if non-conditional, shall not be deemed a waiver or settlement of any defect in such goods and services. The material delivered as a result of this solicitation shall remain the property of the seller until a physical inspection and actual usage of the item(s) is made and thereafter deemed acceptable to the satisfaction of the City, in compliance with the terms and specifications contained herein. In the event that the item(s) supplied to the City is/are found to be defective, or does/do not conform to specifications, the City reserves the right to cancel the order upon written notice to the seller and return the item(s) to the seller at the seller's expense.

2. **ADDENDA**

   When specifications are revised, the City of Port Orange Purchasing Division will issue an addendum addressing the nature of the change. Bidders should acknowledge all addenda by completing Form 7.3 *Addendum and Change Order Procedure Acknowledgement* and include it in the returned response package. Failure to acknowledge the correct number of addenda issued may result in rejection of the response. It is the responsibility of the Bidder to ensure all addenda have been received and reviewed prior to submitting a bid. All addenda shall be posted by the City on DemandStar at www.demandstar.com and the City of Port Orange Purchasing web page at https://www.port-orange.org/bids.aspx. The City shall issue responses to inquiries and any other corrections or amendments it deems necessary in written addenda issued prior to the solicitation response due date. Bidders should not rely on any representations, statements or explanations other than those made in this solicitation or in any addendum to the solicitation. Where there appears to be a conflict between the solicitation and any addenda issued, the last addendum issued shall prevail.

3. **ADDITIONAL GOODS**

   Products, materials and goods not specifically identified in this bid request may be added to any resultant contract upon mutual consent of the contracting parties. The City reserves the right to add or delete products or materials of similar nature, within the family of products of "ITB Item(s)" and their commodity codes, to those items requested in this bid.

4. **ANTI-COLLUSION STATEMENT**

   By submitting a response to a formal solicitation, the Bidder affirms that this response is without previous understanding, agreement, or connection with any person, business, or corporation submitting a response for the same materials, supplies, or equipment, and that the response is in all respects fair, and without collusion or fraud. Additionally, Bidder agrees to abide by all conditions of this solicitation and certifies that he/she is authorized to sign the response for the bidding company/firm. In submitting a response to the City of Port Orange, the Bidder offers and agrees that if the response is accepted, the Bidder shall convey, sell, assign or transfer to the City of Port Orange all rights, title and interest in and to all causes of action it may now or hereafter acquire under the Anti-trust laws of the United States and the State of Florida for price fixing relating to the particular commodities or services purchased or acquired by the City of Port Orange. At the City's discretion, such assignment shall be made and become effective at the time the City tenders final payment to the Bidder.

5. **APPLICABLE LAWS**

   In connection with the furnishing of supplies or performance of work under the contract, the Bidder agrees to comply with the Fair Labor Standards Act, Equal Opportunity Employment Act, and all other

applicable federal and state laws, regulations and executive orders to the extent that the same may be applicable.

6. **ASSIGNMENT**

The successful Bidder shall not sell, assign, transfer or convey this contract in whole or in part, without the prior written consent of the City of Port Orange. Any such assignment or transfer shall not release the Bidder from all contractual obligations.

7. **AUTHORITY TO CONDUCT BUSINESS IN FLORIDA**

A Florida corporation or partnership is required to provide evidence with its response that it is authorized to transact business in Florida and is in good standing with the Florida Department of State. If not with its response, such evidence must be submitted to the City no later than five (5) business days from request of the Purchasing Manager.

A foreign (out-of-state) corporation or partnership is required to provide evidence with its response that it is authorized to transact business in Florida and is in good standing with the Florida Department of State. If not with its response, such evidence must be submitted to the City no later than five (5) business days from request of the Purchasing Manager.

A joint venture is required to provide evidence with its response that it, or at least one of the joint venture partners, is authorized to transact business in Florida and is in good standing with the Florida Department of State. If not with its response, such evidence must be submitted to the City no later than five (5) business days from request of the Purchasing Manager. However, the joint venture is required to provide evidence prior to contract execution that the joint venture is authorized to transact business in Florida and provide the City with a copy of the joint venture Agreement. A joint venture is also required to provide with its response a Statement of Authority indicating that the individual submitting the joint venture's proposal has the legal authority to bind the joint venture. If not with its response, such evidence must be submitted to the City no later than five (5) business days from the request of the Purchasing Manager.

8. **AWARDS**

Recommendation for award will be considered by the City of Port Orange City Council at the earliest possible regular meeting subsequent to the evaluation process. This ITB is issued in accordance with and shall be governed by the provisions of the City's Purchasing Manual. The City of Port Orange City Council reserves the right to make award(s) by individual sections, groups, all or none, or a combination thereof, with one or more Bidders; to reject any and all bids, or to waive any informality or technicality in bids received as deemed to be in the best interest of the City. The City does not award publicly funded contracts to those who knowingly employ unauthorized alien workers in violation of section 274A(e) of the Immigration and Naturalization Act, 8 United States Code s1324a(e). Such employment deprives legal workers of job opportunities. Violation of section 274A(e) shall be grounds for unilateral cancellation of the contract, bid or quote for purchase of services and goods by the City of Port Orange.

9. **AWARD AND EXECUTION OF CONTRACT**

When a bid received has been determined to be satisfactory, a contract will be awarded, or Purchase Order issued to the lowest responsive and responsible Bidder within the time designated in the contract documents. The Bidder(s) to whom the award is made shall execute the contract(s) and return it, together with the properly executed bonds and insurance certificates to the City within the time specified.

10. **BID RETURNS**

Bidders shall return all completed responses to the City of Port Orange at the address set forth in Section 2 of this document on the date and at the time specified. Late submissions will not be accepted and shall be returned to Bidders unopened.

11. **BID PROTEST**

Any person who is adversely affected by the City's decision or intended decision shall file with the City Purchasing Manager a notice of protest in writing within 72 hours after the posting of the notice of decision or intended decision. With respect to a protest of the terms, conditions, and specifications contained in a solicitation, including any provisions governing the methods for ranking bids, proposals, statements, or replies, awarding contracts, reserving rights of further negotiation, or modifying or amending any contract, the notice of protest shall be filed in writing within 72 hours after the posting of the solicitation. Saturdays, Sundays, and state holidays shall be excluded in the computation of the 72-

hour time established herein. The formal written protest shall be filed with the Purchasing Manager in writing within ten (10) days after the date the notice of protest is filed. The formal written protest shall state with particularity the facts and law upon which the protest is based. Failure to file a notice of protest or failure to file a formal written protest shall constitute a waiver of proceedings. Upon receipt of the formal written protest that has been timely filed, the City shall stop the solicitation or contract award process until the subject of the protest is resolved by final City action. However, the City may continue the solicitation or award process, provided the City Manager sets forth in writing particular facts and circumstances which require the continuance of the solicitation or contract award process without delay in order to avoid an immediate and serious danger to the public health, safety, or welfare. The City shall provide an opportunity to resolve the protest by mutual agreement between the parties. The policy this City has established is as follows:

a. As soon as possible after receipt, the Purchasing Manager shall provide written bid protest to City Manager, City Attorney, Department Head involved, and Supervisor directly involved in the acquisition.
b. Purchasing Manager shall schedule within seven (7) business days, excluding weekends and holidays, a meeting with the above-mentioned individuals or designee and protestor. The intent of the meeting is to provide a review and/or solution prior to going before Council. After reviewing all relevant information, the City Manager shall render a decision.
c. If the protestor disagrees, he/she may appeal to the City Council at a formal council meeting. After reviewing the evidence, the City Council will issue their decision. The City Council's decision is final; however, the protestor can appeal the decision to the Circuit Court in Volusia County, Florida within thirty (30) days of the City Council's final decision. Decisions at all levels shall be in writing to the protester.

12. **BID TABULATION**

Bidders who wish to receive a copy of the bid tabulation may obtain it via DemandStar at www.demandstar.com or on the City Purchasing web page at www.port-orange.org/bids.aspx.

13. **BIDDER'S PRODUCT OR SERVICES**

The Bidder's product (if applicable) delivered to the City shall be free of all liens, claims or encumbrances, and the Bidder warrants that it has a clear title to the product being delivered.

a. If the Bidder is contracted to provide services, such services shall be fully satisfactory to the City as determined by the City.
b. The Bidder shall provide the City with any data, reports or other information as required and requested by the City to enable it to utilize the product or service furnished by the Bidder.
c. In furnishing the service or product to the City, the Bidder shall comply with all federal, state, county laws, and city rules, regulations and codes and their successors or amendments. Violation of such laws, rules, regulations and codes may be grounds for delaying or reducing the amount due, or in rescinding the contract, proposal or quote.

14. **BONDS**

If this solicitation requires submission of bid guarantee and payment and performance bonds, there will be a separate section explaining those requirements. When the Purchasing Manager deems it necessary, bid bonds/deposits shall be prescribed and are advertised in the public notices inviting bids. Responses submitted without the required bid bond or certified check shall be deemed non-responsive. Normally, if a bid bond/deposit is requested, it is in the amount of five percent (5%) of the bid amount.

Depending on the amount and/or nature of the work to be performed, a Payment and Performance Bond may be requested and shall be in an amount equal to one hundred percent (100%) of the total contract amount which will be recorded by the City, at the awarded Bidder's sole cost and expense, with the Clerk of the Circuit Court, Volusia County, Florida. After recording, the City will furnish to the awarded Bidder the recording information for the bond to evidence that the Bidder has met the requirements of Florida law. The City will bill the cost of recording to the awarded Bidder. Unsuccessful respondents are entitled to the return of their bid bond. A successful respondent shall forfeit any surety required by the Purchasing Manager upon failure of the respondent to enter into a contract within the time specified after the award of bid.

15. **CERTIFICATE OF INSURANCE**

Upon issuance of a notice of intent to award, the selected Bidder will be required to submit a Certificate of Insurance showing proof of adequate coverage for professional general liability, errors and omissions and workers' compensation as identified under the insurance requirements of this solicitation and listing the City of Port Orange as Additional Insured prior to execution of the contract.

16. **CHANGE ORDERS**

No oral statement of any person shall modify or otherwise change, or affect the terms, conditions or specifications stated in the resulting contract. All change order requests shall be made in writing by the supplier/contractor for review by the Contract Administrator for the City of Port Orange. No work shall be performed as set forth in the change order until the awarded Bidder receives an executed Purchase Order for the requested change.

17. **CHANGE ORDER REQUEST NOTIFICATION**

The awarded Bidder is responsible for giving the City of Port Orange, prior to the contract expiration date, at least forty-five (45) calendar days of advance notice for any anticipated changes in price greater than $25,000, and any changes in time and/or scope of the awarded contract. The Bidder shall not continue to provide services past the contract expiration date unless approved by a written Change Order Notice from the City.

18. **CLEAN UP**

Upon completion of the delivery of materials, the Bidder shall restore any/all public and private property which may have been damaged during delivery. Restoration is meant to include removal of any spillage or restoring damage to the edge of pavement, sidewalks, driveways, landscaped areas, etc. Bidder shall make repairs consistent with or better than what existed prior to delivery. This shall be understood to include the use of sod or seed and mulch to replace (if necessary) existing grass that has been damaged. If sod is used it shall match the sod present on the effected property. Bidder shall make all repairs and restorations at his/her expense.

19. **CONDUCT OF BIDDERS**

All Bidders or individuals acting on behalf of a Bidder are hereby prohibited from lobbying or otherwise attempting to persuade or influence any member of the Evaluation Committee, City Council members, or City staff at any time during the course of the solicitation process. The solicitation process shall end upon issuance of the written staff recommendation (Notice of Intent to Award) for selection of a Bidder. All Bidders or individuals acting on behalf of a Bidder are further prohibited from contacting or otherwise attempting to communicate with any member of the staff, Evaluation Committee or City Council members regarding the pending solicitation or its outcome until after the issuance of the written recommendation of the most qualified Bidder. Until such recommendation is issued in writing, any questions regarding the pending solicitation shall be submitted to the Purchasing Division. Failure to comply with this procedure shall result in rejection/disqualification of said submittal without exception. Contact with staff, City Council members or the Evaluation Committee during a public meeting shall not be considered a violation of this requirement.

20. **CONE OF SILENCE**

The Cone of Silence is designed to protect the integrity of the procurement process by shielding it from undue influences prior to the execution of the award. The Cone of Silence is defined as the period beginning with the issuance of the solicitation document and continues through the execution of the award document. During this time Bidders, service providers and the like are prohibited from all communications regarding the solicitation with City staff, City consultants, City legal counsel, City Agents, or elected officials. Any Bidder who initiates any discussions or attempts to influence a member or members of the aforementioned shall be disqualified from continued participation in the procurement process with regard to that particular solicitation.

Exceptions to the Cone of Silence:

- Written communication directed to the Procurement Officer;
- All communications occurring at Pre-Proposal Conferences;
- Oral presentations before publicly noticed committee meetings;
- Procurement of goods and services for Emergency situations; and

- Contractors already on contract with the City to perform services for the City are allowed discussions necessary for the completion of an existing contract.

21. **CONFLICT OF INTEREST**

For purposes of determining any possible conflict of interest, all Bidders must disclose if any City of Port Orange employee is also an owner, corporate officer, or employee of Bidder's business. No official or employee of the City who exercises any functions or responsibilities in the review or approval of the undertaking or carrying out of the Scope of Work covered by the contract shall voluntarily acquire any personal interest, directly or indirectly, in the contract or proposed contract.

22. **CONFLICT OF INSTRUCTIONS**

If a conflict exists between the General Terms and Conditions and instructions contained herein, and the Special Terms and Conditions and instructions contained herein, the Special Terms and Conditions shall govern.

23. **CONTRACT OBLIGATION**

Except as otherwise stated herein, the City of Port Orange City Council shall approve the contract if greater than $25,000.00 annually. The Mayor or other person authorized by the Mayor must sign the contract before it becomes binding on the City of Port Orange or the Bidder. Department heads are NOT authorized to sign contracts for the City of Port Orange. Binding agreements shall remain in effect until all products and/or services covered by this purchase have been satisfactorily delivered and accepted.

24. **CONTRACT RENEWALS**

Renewals may be made ONLY by written agreement between the City of Port Orange and the Bidder. Any price escalations are limited to those stated by the Bidder on the original response.

25. **COPYRIGHT AND PATENT RIGHTS**

Bidder warrants that there has been no violation of copyrights or patent rights in manufacturing, producing and/or selling the item(s) ordered or shipped as a result of this response, and successful Bidder agrees to hold the City harmless from any and all liability, loss or expense by any such violation.

26. **COST INCURRED BY BIDDER**

All expenses, including costs for required bonds, involved with the preparation and submission of Responses to the City, or any work performed in connection therewith shall be borne by the Bidder. No payment shall be made for any response received, nor for any other effort required of or made by the Bidder prior to commencement of work as defined by the contract approved by the City Council.

27. **DAMAGE**

Any damage to driveways, irrigation systems, sidewalks, pavement, or landscaping will be evaluated by the City's representative and the Bidder. If the Bidder is found to be at fault, all repairs, restitution, or reimbursements to the City must be completed within one week of discovery.

28. **DEBARMENT HISTORY**

The City will consider a Bidder's debarment history information in its review and determination of responsibility. All Bidders are required to disclose to the City all cases of debarment filed, pending, or resolved by the City or other public entity during the last five (5) years prior to the solicitation response due date, whether such actions were brought by or against the Bidder, any parent or subsidiary of the Bidder, or any predecessor organization. If the Bidder is a joint venture, the information provided should encompass the joint venture (if it is not newly formed for purposes of responding to the solicitation) and each of the entities forming the joint venture. Although the review of a Bidder's debarment history is an issue of responsibility, the failure to provide debarment history as required on the *Certification Regarding Debarment, Suspension and Other Responsibility Matters* (contained herein) may result in a recommendation of non-responsive by the Purchasing Manager.

29. **DEFAULT PROVISIONS**

In the event of default by the Bidder, the City reserves the right to procure the item(s) bid from other sources and hold the Bidder responsible for excess costs incurred as a result. If a Bidder defaults on a City contract, the City Council may elect to refrain from doing business with the Bidder for a period of 36 months from the date of default.

30. **DELIVERY OF GOODS/SERVICES**

All materials are to be delivered F.O.B.; City of Port Orange designated facility. Delivery dates pertaining to this invitation must be clearly stated in the bid form where required and include weekends and

holidays. Failure to comply with this requirement may be a cause for disqualification of bid. Unless otherwise specified, delivery at the earliest date is required. The Bidder shall clearly state in the response the time required for delivery upon receipt of contract or purchase order. Proposed delivery time must be specific and such phrases "as required," "as soon as possible" or "prompt" may result in disqualification of the bid. Delivery time will be a factor for any orders placed as a result of this response. The City reserves the right to cancel such order(s) or any part thereof, without obligation, if delivery is not made within the time(s) specified herein and hold the Bidder in default. Upon approval of a contract, the Bidder is obligated to deliver the goods to the destination specified in the solicitation or the purchase order and bears the risk of loss until delivery. If this solicitation or purchase order does not contain delivery instructions, Bidder shall request instructions in writing from the Purchasing Manager. If the delivery instructions contained in the solicitation allocate delivery costs and risks in a manner contrary to this section, the provisions of this competitive solicitation shall prevail. When delivery is not met as provided for in the contract, the Purchasing Division reserves the right to make the purchase on the open market, with any cost in excess of the contract price paid by the Bidder, in addition to any other damages, direct or consequential, incurred by the City as a result thereof. In addition, failure of the Bidder to meet the contract delivery dates will be cause for removal of the Bidder from the City's list of eligible Bidders/Proposers as determined by the Purchasing Division.

31. **DETERMINATION OF LOWEST AND BEST RESPONSIBLE BIDDER**

In determining the lowest and best responsible Bidder, in addition to price, there will be considered the following:

a. The ability, capacity and skill of the Bidder to perform the contract.
b. Whether the Bidder can perform the contract within the time specified, without delay or interference.
c. The character, integrity, reputation, judgment, experience, and efficiency of the Bidder.
d. The quality of performance of previous contracts.
e. The previous and existing compliance by the Bidder with laws and ordinances relating to the contract.
f. The sufficiency of the financial resources and ability of the Bidder to perform the contract or provide the service.
g. The quality, availability and adaptability of the supplies or contractual services to the particular use required.
h. The ability of the Bidder to provide further maintenance and service for the use of the subject of the contract.
i. The number and scope of conditions attached to the bid.
j. Such other factors as appear to the city council to be pertinent to the bid or the contract under all of the circumstances involved.

32. **DISCLOSURE OF CONFLICTS**

The award is subject to the provisions of Chapter 112.313, Florida Statutes. All Bidders must disclose with their response the name of any officer, director, or agent who is also an employee of the City. Further, all Bidders must disclose the name of any employee who owns, directly or indirectly, an interest in the Bidder's firm or any of its branches. The Bidder shall not compensate, in any manner, directly or indirectly, any officer, agent, or employee of the City for any act or service that he/she may do, or perform for, or on behalf of any officer, agent or employee of the Bidder. No officer, agent, or employee of the City shall have any interest, directly or indirectly, in any contract or purchase made, or authorized to be made by anyone for, or on behalf of the City. The Bidder shall have no interest and shall not acquire any interest that shall conflict in any manner or degree with the performance of the services required under the solicitation.

33. **DISQUALIFICATION OF BIDDER**

The Purchasing Manager shall maintain a current listing of qualified Bidders. The Purchasing Manager may, from time to time, remove any Bidder's name from the list of qualified Bidders. Normally the removal of a Bidder from the Bidder list is done after non-response from that Bidder for three (3) consecutive solicitations. Such action may also arise out of breach of contract, default, or irregular business practice, based on the Finance Director and City Attorney's recommendation. Any or all responses may be rejected if the City believes that collusion exists among the Bidders. Responses in which the prices are obviously

unbalanced may be rejected. If multiple responses are submitted by a Bidder and after the responses are opened one of the responses is withdrawn, the result will be that all of the responses submitted by that Bidder will be withdrawn; however, nothing herein prohibits a Bidder from submitting multiple responses for different products or services.

34. **EVALUATION**

Evaluation shall be used as a determinant as to which response items or services are the most efficient and/or most economical for the City. It shall be based on all factors which have a bearing on price and performance of the items in the user environment. All responses are subject to tabulation by the City of Port Orange Purchasing Division and recommendation to the governing body. Compliance with all solicitation requirements, delivery and needs of the using department are considerations in evaluating responses. Pricing is NOT the only criteria for making a recommendation. The City of Port Orange Purchasing Division reserves the right to contact any Bidder/Proposer, at any time, to clarify, verify or request information with regard to any response.

35. **EXCEPTIONS TO SPECIFICATIONS**

For purposes of evaluation, the Bidder must indicate any exception to the specifications, terms, and/or conditions, no matter how minor. This includes any agreement or contract forms supplied by the Bidder that are required to be signed by the City. If exceptions are not stated by the Bidder, in his/her bid, it will be understood that the item(s)/services fully comply with the specifications, terms and/or conditions stated by the City. Exceptions are to be listed by the Bidder on Form 7.2 *Bidder's Acknowledgement* included with the bid. The City will not determine exceptions based on a review of any attached sales or manufacturer's literature.

36. **E-VERIFY**

Bidders shall utilize the U.S. Department of Homeland Security's E-Verify system to verify the employment eligibility of all new employees hired by the Bidder during the term of contract and shall expressly require any subcontractor performing services pursuant to the contract to likewise utilize the U.S. Department of Homeland Security's E-Verify system to verify the employment eligibility of all new employees hired by the subcontractor during the term of contract. Bidders shall complete Form 7.12 *E-Verify Affidavit* and include it in the returned bid package. Failure to include the affidavit may result in rejection of the bid.

37. **FACILITIES**

The City reserves the right to inspect the Bidder's facilities at any time.

38. **FAILURE TO RESPOND**

If the Bidder elects not to bid, the City requests that Bidder return the enclosed Form 7.15 *No Submittal Response* by the bid due date and state the reason(s) for not bidding. Failure to respond, either by submitting a bid, or by submitting Form 7.15 *No Submittal Response*, three (3) times, shall result in the Bidder's name being removed from the City's mailing list.

39. **FINANCIAL STABILITY**

Bidders shall be prepared to supply a financial statement upon request, preferably a certified audit of the last available fiscal year. A third party prepared financial statement **and** the latest Dunn & Bradstreet report will be accepted in lieu thereof.

40. **FORCE MAJEURE**

Neither party shall be liable for any delay in performance or failure to perform any obligation hereunder if, and to the extent that, such failure or delay is caused by an event of force majeure. Force majeure shall mean any act, event or condition that is beyond the party's reasonable control, that materially and adversely affects the party's ability to perform its obligations hereunder, and that is not the result of the party's willful neglect, error, omission or failure to exercise reasonable due diligence.

41. **FOREIGN COUNTRIES OF CONCERN**

A governmental entity may not knowingly enter into a contract with an entity which would give access to an individual's personal identifying information if: a) the entity is owned by the government of a foreign country of concern to include the People's Republic of China, the Russian Federation, the Islamic Republic of Iran, the Democratic People's Republic of Korea, the Republic of Cuba, the Venezuelan regime of Nicolas Maduro, or the Syrian Arab Republic, including any agency of or any other entity of significant control of such foreign country of concern; b) the government of a foreign country of concern has a controlling

interest in the entity; or c) the entity is organized under the laws of or has its principal place of business in a foreign country of concern.

42. **GOVERNING FORMS**

In the event of any conflict between the terms and provisions of these requirements and the specifications, the specifications shall govern. In the event of any conflict of interpretation of any part of this overall document, the City's interpretation shall govern.

43. **GOVERNING LAW**

Bidders shall comply with all applicable federal, state and local laws and regulations. All responses are solicited and shall be made pursuant to the Code of Ordinances, City of Port Orange, Chapter 2, Article VI, Division 2, Section 2-263, and all responses will be evaluated in accordance with the provisions thereof. Code of Ordinances, City of Port Orange is on file in the Office of the City Clerk, City Hall, 1000 City Center Circle, Port Orange, Florida and at www.municode.com. The City of Port Orange is also governed by the Consultants' Competitive Negotiation Act, Section 287.055, Florida Statutes, as the method of selecting architects, engineers and land surveyors. The City has utilized the procedures in the Act for Professional counselors, environmentalists, planners, general contractors, computer systems, designers, telecommunications consultants, maintenance technicians, financial services and other professional services. Every acquisition equal to or greater than $35,000.00 must have a signed, notarized *Sworn Statement of Public Entity Crimes* (Form 7.5) contained herein to comply with Section 287.133(3)(a), Florida Statutes. Also required is the *Drug- Free Preference Statement* (Form 7.4) also contained herein to comply with Section 287.087, Florida Statutes.

44. **GRANT FUNDING**

Any contract entered into by the City that is to be paid from grant funds shall be limited to payment from the grant funding and the Bidder understands that the City has not set aside any City funds for the payment of obligations under a grant contract. If grant funding should become unavailable at any time for the continuation of services paid for by the grant, and further funding cannot be obtained for the contract, then the sole recourse of the provider shall be to terminate any further services under the contract and the contract shall be null and void.

45. **HIPAA COMPLIANCE**

The Bidder agrees to comply with the Standards for Privacy of Individually Identifiable Health Information of the Health Insurance Portability and Accountability Act of 1996, PL 104-191, 45 CFR Parts 160-164, as amended, referred to as "HIPAA," to the extent that the Bidder uses, discloses or has access to protected health information as defined by HIPAA.

46. **IDENTICAL TIE BIDS**

If there are tie bids, meaning everything except the information relating to the submitting firm is the same, the following methods shall be used in the order below to break the tie:

- The Bidder that has a Business Tax Receipt (BTR) within Port Orange City limits (confirmed through Sunbiz).
- The commodity was manufactured in the State of Florida.
- Florida business as confirmed thru SunBiz.org.
- If one has or had a contract with the City and performance is or was satisfactory. If performance of a tie Bidder who has or had a contract with the City and performance is or was not satisfactory, the other tied Bidder is awarded.
- Drug free workplace policy in place.

47. **INDEMNIFICATION/HOLD HARMLESS**

(a) Bidder shall be liable for any loss of, or damage to, City property caused by the negligence, recklessness, or intended wrongful misconduct of Bidder, his/its agents, servants and employees and shall indemnify and save the City harmless against all actions, proceedings, claims, demands, costs, damages and expenses, including attorney's fees, by reason of any suit or action brought for any actual or alleged injury to or death of any person or damage to property other than City property, resulting from the performance of the contract by the Bidder, his/its agents, servants and employees. Bidder shall submit a full written report to the Finance Director within twenty-four (24) hours following the occurrence of such damage, loss or injury.

(b) To the fullest extent permitted by law, in addition to the express duty to indemnify the City when there is any causal connection between Bidder's work and any injury, loss, damage, death or property damage, Bidder expressly undertakes a duty to defend City as a separate duty, independent of and broader than the duty to indemnify. The duty to defend agreed to by Bidder hereby expressly include all costs of litigation, attorney's fees, settlement costs and reasonable expenses in connection with the litigation, whether or not the claims made for loss, injury, damage or property damage are valid or groundless and regardless of whether the defense of City is maintained by the City or assumed by Bidder as long as the claims made could be causally connected to Bidder as reasonable determined by the City.

48. **INDEPENDENT CONTRACTOR**

It is expressly understood and agreed by both parties hereto that the City is contracting with the successful Bidder as an independent contractor. The parties hereto understand and agree that the City shall not be liable for any claims which may be asserted by any third party occurring in connection with the services to be performed by the successful Bidder under this contract and that the successful Bidder has no authority to bind the City. The Bidder represents itself to be an independent contractor offering such services to the public and shall not represent himself or his employees to be an employee of the City. Therefore, the Bidder shall assume all legal and financial responsibility for taxes, FICA, employee fringe benefits, worker's compensation, employee insurance, minimum wage requirements, overtime, etc., and agrees to indemnify, save, and hold the City, its officers, agents, and employees, harmless from and against, any and all loss; cost (including attorney's fees); and damage of any kind related to such matters. The Bidder shall further understand that the City cannot save and hold harmless and or indemnify the Bidder and/or the Bidder's employees against any liability incurred or arising as a result of any activity of the Bidder or any activity of the Bidder's employees performed in connection with the contract.

49. **INSPECTIONS AND TESTING**

City of Port Orange reserves the right to inspect any item(s) or service location for compliance with specifications and requirements and needs of the using department. If a Bidder cannot furnish a sample of a response item, where applicable, for review, or fails to satisfactorily show an ability to perform, the City can reject the response as inadequate and non-responsive.

50. **INSURANCE CANCELLATION**

No change or cancellation in insurance shall be made without thirty (30) days of written notice by the Bidder to the City. Insurance coverage required in these specifications shall be in force throughout the contract term. Should any awardee fail to maintain or to provide acceptable evidence of current insurance within five (5) days after receipt of written notice at any time during the contract term, the City shall have the right to consider the contract breached which shall justify the termination thereof.

51. **INSURANCE REQUIREMENTS**

Bidder shall maintain insurance, as required herein, during the life of this contract. Bidder shall provide to the City, a certificate of insurance endorsing the City of Port Orange as an additional named insured. All insurance coverages of the Bidder shall be primary and non- contributory. All insurance coverages of the Bidder shall not seek contribution from any other insurance or self- insurance available to the City. For workers' compensation coverage, the Bidder's insurance certificate shall include the insurer's waiver of subrogation in lieu of endorsing the City as an additional insured for workers' compensation.

IMPORTANT: The City does not accept Workers' Compensation Exemptions. Bidder may use leased employees if the Bidder ensures that all workers who access the jobsite are employees covered by the employee leasing company, and no non-employees are permitted to access the jobsite. Any Bidder using a leased employee shall complete the City's *Leased Employee Affidavit* contained herein. Policies for Workers' Compensation may be issued by companies authorized as a group self-insurer by F.S. 440.572. Policies other than Workers' Compensation shall be issued by insurers licensed and/or duly authorized under Florida Law to do business in the State of Florida and all insuring companies are required to have a minimum rating of "A-" in the "Best Key Rating Guide" published by A.M. Best & Company, Inc. Bidder shall not commence work under this contract until the City has received a certificate or certificates of insurance with endorsement evidencing the required insurance. Insurer shall provide the City written notice of cancellation, non-renewal or any other changes in coverage no later than thirty (30) days prior to the effective date of the change and shall provide notice to the City no later than 10 days after non-

payment. The Certificates of Insurance and required insurance policies shall contain provisions that thirty (30) days of prior written notice shall be given to the City of any cancellation, intent not to renew, or reduction in the policies or coverages. Bidder shall require and ensure each of its subcontractors to maintain, until the completion of the subcontractor's work, insurance of the types and to the limits set forth herein. All insurance coverages shall be primary and non-contributory. All insurance coverages of the subcontractors shall not seek contribution from any other insurance or self-insurance available to the City. The Bidder is responsible for ensuring that its subcontractors maintain the required coverage. Failure of the Bidder to ensure the subcontractors maintain the required coverage, shall not relieve the Bidder of any contractual responsibility, obligation or liability. The City reserves the right to increase the insurance coverage requirement as determined for higher risk contracts. The acceptance by the City of any Certificate of Insurance does not constitute approval or agreement by the City that the insurance requirements have been satisfied or that the insurance policy shown on the Certificate of Insurance is in compliance with and does not waive the insurance required by this. Should at any time the Bidder or subcontractors not maintain the insurance coverages required herein, the City may terminate the contract or at its sole discretion shall be authorized to purchase such coverages and charge the Bidder for such coverages purchased. The City shall be under no obligation to purchase such insurance, nor shall it be responsible for the coverages purchased or the insurance company or companies used. The decision of the City to purchase such insurance coverages shall in no way be construed to be a waiver of any of its rights under the contract.

[Remainder of page left intentionally blank]

Standard Insurance Requirements			
Required	**Insurance**	**Standards**	**Additional Requirements**
☒	Workers' Compensation The Contractor shall maintain coverage for its employees with statutory workers' compensation limits, and no less than the limits indicated in the Schedule of Limits for Employers' Liability. Said coverage shall include a waiver of subrogation in favor of the City. **The City will not accept elective exemptions.** Any Contractor using an employee leasing Company shall complete the Leased Employee Affidavit Exhibit Form.	Contract Amount — Limits Up to $10 million — Statutory/$500,000 $10 - $20 million — Statutory/$1,000,000 Contracts over $20 million to be determined by the City	• If contract requires work on or about navigable waters, Longshoreman's and Harbor Workers' coverage required. • If vessels involved, Jones Act coverage with limits of $500,000 required
☒	Comprehensive General Liability (including completed operations and contractual liability)	Limits: Combined Single Limit Bodily Injury and Property damage: $1,000,000 each occurrence $1,000,000 aggregate	When work is on or under Railroad rights of way or properties, the Contractor shall take out and maintain during the life of the contract, Railroad protective liability and property damage insurance in amounts as requested by the Railroad.
☒	Comprehensive Business, Automobile Liability to include all owned, hired and non-owned automobiles	Limits: Auto Liability Bodily Injury and Property Damage: $1,000,000 each occurrence $1,000,000 aggregate	
Additional Insurance Requirements			
☐	Property Insurance Builders Risk Additional Coverage:	Limits: Buildings – completed value of contract "All Risk" coverage on latest ISO for or its equivalent. Permission grated to occupy. Owner named as insured AIMA	If agreement required handling or installation of Owner's equipment, coverage should be furnished on "All Risk" form, including transit and Owner shall be named.
☐	Installation Floater (IT)	Limits: Coverage – To Be Determined	
☐	Contractor Pollution Liability	Limits: Coverage - $1,000,000	
☐	Professional Liability/Errors and Omissions	Limits: Coverage - $1,000,000	
☐	Umbrella Policy	Limits: Coverage – To Be Determined	
☐	Payment and Performance Bond required	Limits: Coverage – equal to amount of contract	
	City Manager waives Payment and Performance Bond for work under $200,000 unless otherwise requested by the Department Head.		
	Unless otherwise required by law, City Manager waives insurance for FOB goods only purchases.		

52. **INVOICES AND PAYMENTS**

All invoices shall be sent to: City of Port Orange, Accounts Payable, P.O. Box 291759, Port Orange, Florida, 32129 or email to apbilling@port-orange.org. In accordance with Florida Statutes, Chapter 218, payment will be made within 45 days after receipt of merchandise and a proper invoice. The City will attempt to pay within fewer days if contractor offers a payment discount. The City cannot make advance payments, make deposits in advance of receipt of goods, or pay C.O.D. If the awarded firm would like to receive payment via ACH, this can be accommodated after the contract is fully executed.

53. **IRREVOCABILITY OF RESPONSES**

Each Bidder agrees that responses shall remain open until the contract effective date not to exceed 90 days after the award selection, shall not be subject to revocation or withdrawal, and shall be subject to the City Council's acceptance of a contract with the Bidder.

54. **LATE SUBMISSIONS, LATE MODIFICATIONS AND LATE WITHDRAWALS**

Responses received after the response due date and time are late and shall not be considered. Modifications received after the response due date are also late and shall not be considered. Letters of withdrawal received after the response due date are late and shall not be considered. Letters of withdraw received after contract award shall be deemed a breach of contract, subject to penalties as set forth in the contract and solicitation.

55. **LEGAL REQUIREMENTS**

Applicable provision of all federal, state, county and local laws, and all ordinances, rules, and regulations shall govern development, submittal and evaluation of all responses received in response hereto and shall govern any and all claims and disputes which may arise between person(s) submitting a response to a solicitation hereto and the City by and through its officers, employees and authorized representatives, or any other person, natural or otherwise; and lack of knowledge by any Bidder shall not constitute a cognizable defense against the legal effect thereof.

56. **LICENSES, PERMITS AND TAXES**

The Bidder shall comply with all rules, regulations, laws and permitting requirements of the City, Volusia County, the State of Florida, and the United States Government now in force or hereafter to be adopted. The Bidder shall abide by all ordinances and laws pertaining to his/her operations and shall secure, at his/her expense, all licenses and permits necessary for construction and operation.

57. **LITERATURE (if applicable):**

If no brand, model or make is specified, Bidders shall submit descriptive literature and technical data, fully detailing all features, designs, construction, appointments, finishes and the like not covered in the specifications, necessary to fully describe the equipment, material, and/or services Bidder proposes to furnish.

58. **LOCAL PREFERENCE**

The City uses Sunbiz to verify a supplier or contractor's business address. Sunbiz is a database on the Florida Department of State, Division of Corporations website and can be accessed using this link: https://dos.myflorida.com/sunbiz/. A local supplier or contractor is interpreted as a respondent to a solicitation, which as of the date of the solicitation opening, has a valid Business Tax Receipt (BTR) issued by the City of Port Orange to do business in the City of Port Orange which authorizes the supplier or contractor to provide the goods, services, or construction to be purchased and has a physical address located within the limits of Port Orange from which the supplier or contractor operates or performs business. A Post Office Box cannot be used to establish physical address. This local preference is only used as part of a tie breaker during a formal solicitation.

59. **MAINTENANCE**

If maintenance is required for equipment purchased as a result of this solicitation, it is preferred that such maintenance be available to the City of Port Orange by a manufacturer-authorized maintenance facility. Costs for this service shall be shown on the Schedule of Unit Pricing form for the solicitation. If the City of Port Orange opts to include maintenance, it shall be so stated in the purchase order and said cost will be included. Service will commence only upon expiration of applicable warranties and shall be priced accordingly.

60. **NAME BRANDS**

Specifications may reference name brands and model numbers. It is not the intent of the City of Port Orange to restrict these bids in such cases, but to establish a desired quality level of merchandise or to meet a pre-established standard due to like existing items. Bidders may offer items of equal stature and the burden of proof of such stature rests with the Bidder, unless otherwise specified by the City. The City of Port Orange shall act as sole judge in determining equality and acceptability of products offered.

61. **NON-DISCRIMINATION**

There shall be no discrimination as to race, color, religion, gender, age, marital status, national origin, ancestry, and physical or mental disability in the operations conducted under this contract. Included as applicable activities by the contractor under this section are the solicitation for or purchase of goods or services, or the subcontracting of work in performance of this contract.

62. **NON-EXCLUSIVITY OF CONTRACT**

The selected Bidder understands and agrees that any resulting contractual relationship is non-exclusive, and the City of Port Orange reserves the right to seek similar or identical services elsewhere if deemed in the best interest of the City of Port Orange.

63. **NON-PERFORMANCE**

Failure to meet the expected quality of workmanship, schedule, or other criteria agreed upon, shall be considered a default. In case of default, the City may procure the required services from other sources and hold the contractor responsible for any excess costs occasioned thereby and may immediately cancel the contract.

64. **NOTICE TO CONTRACTOR**

The employment of unauthorized aliens by any contractor is considered a violation of Section 274A (e) of the Immigration and Nationality Act. If the contractor knowingly employs unauthorized aliens, such violation shall be cause for unilateral cancellation of the contract.

65. **OPTIONAL CONTRACT USAGE**

As provided in Section 287.042(16), Florida Statutes, State of Florida agencies may purchase from a contract resulting from this solicitation, provided the Department of Management Services, Division of Purchasing, has certified its use to be cost effective and in the best interest of the State. Contractor(s) may sell such commodities or services certified by the Division to State of Florida agencies at the contractor's option.

66. **OTHER AGENCIES**

(a) All Bidders awarded contracts from this bid may, upon mutual agreement, permit any municipality or other governmental agency to participate in the contract under the same prices, terms, and conditions, if agreed to by both parties.

(b) It is understood that at no time will any city, municipality, or other agency be obligated for placing an order for any other city, municipality, or agency; nor will any city, municipality, or agency be obligated for any bills incurred by any other city, municipality, or agency. Further, it is understood that each agency will issue its own purchase order to the awarded Bidder(s).

67. **PATENTS/COPYRIGHTS**

The successful Bidder agrees to indemnify and hold the City harmless from any claim involving patent infringement or copyrights on goods supplied.

68. **PRE-BID CONFERENCE**

The Purchasing Manager shall determine if a pre-bid conference is required and provide the date, time and location in the solicitation legal advertisement and solicitation specifications. The conference shall normally be held in the Council Chambers, located on the first floor of City Hall, 1000 City Center Circle, Port Orange, Florida. A site visit may be included and shall immediately follow. Only Bidders attending a mandatory pre-bid conference will be eligible to submit a response. The representative of each Bidder shall be an authorized employee of the Bidder and shall sign in accordingly.

69. **PREPARATION OF RESPONSES**

In preparing responses, the Schedule of Unit Pricing form, the Bid Bond form (when a Bid Bond is required as bid security), Certificate as to Corporate Principal, Public Entity Crimes Statement, Anti- Collusion Statement, and Drug Free Preference Statement must be properly executed in ink. The prescribed Schedule of Unit Prices shall be typewritten or written in ink, or electronically imputed in the blank spaces

for each item, with the amounts extended if a unit price bid, and all amounts totaled. The sum of the total bid as calculated from the individual items, Schedule of Unit Prices, shall equal the Total Price. Except as provided below, bids containing substitutions or combinations of alternates will not be considered unless such substitutions or combinations are specifically authorized by the solicitation. The Bidder shall sign his/her name and give his/her business address in the spaces provided therefore. If the submittal is made as a partnership, it shall be signed by all partners; if made by a corporation, it shall be signed in the name of the corporation by one of the officers thereof and shall have affixed the seal of the corporation.

70. **POSTPONEMENT/CANCELLATION/WAIVER OF IRREGULARITIES**

The City may, at its sole and absolute discretion, reject any and all, or parts of responses; re- advertise the solicitation for new responses; postpone or cancel, at any time, the solicitation process; or waive any irregularities in the solicitation or in the responses received as a result of the solicitation, or to accept that response which best serves the interest of the City.

71. **PRICING**

Responses may not be withdrawn before the expiration of one-hundred-twenty (120) days. Prices shall be firm, with no escalator clauses unless specified by the City. Responses may be withdrawn after one-hundred-twenty (120) days only upon written notification to the City. Prices for all goods and/or services shall be firm for the duration of this contract and shall be stated on the Schedule of Unit Pricing form. Prices shall be all inclusive: no price changes, additions, or subsequent qualifications will be honored during the course of the contract. All prices must be written in ink or typewritten. Pricing on all transportation, freight, drayage and other charges are to be prepaid by the contractor and included in the bid prices. If there are any additional charges of any kind, other than those mentioned above, specified or unspecified, the Bidder shall indicate the items required and attendant costs or forfeit the right to payment for such items. Where unit pricing and extended pricing differ, unit pricing prevails. In the event of any discrepancy between the written amounts and the numerals, the written amounts shall govern and will be considered as the price bid. When submitting bids/proposals based on a lump sum basis, Bidders shall be required to submit a price for each line item listed on the Schedule of Unit Pricing in order to be considered for award.

72. **PRODUCTS/ESTIMATES**

Items included on the bid form represent the needs of various departments within the City. This is in no way to be construed as the entire or complete list of products to be purchased from the resulting contract. There is no anticipated dollar volume for this contract and estimated quantities provided on the Schedule of Unit Pricing are for bidding purposes only and are not guaranteed. Items shall be ordered on an as needed, when needed basis. Exact quantities or estimated quantities cannot be predetermined.

73. **PROPRIETARY INFORMATION**

Upon receipt by the City, responses to solicitations, become public records subject to the provisions Florida's state policy on public records, Section 119, Florida Statutes. If you believe that any portion of your response is exempt, you should clearly identify the specific documents for which confidentiality is claimed and provide specific legal authority of the asserted exemption. Any financial statement that an agency requires a prospective Bidder to submit in order to prequalify for bidding or for responding to a proposal for a road or any other public works project is exempt from Section 119.07, Florida Statutes, and Article I, 24(a), Florida Constitution.

74. **PROTECTION**

Precaution shall be exercised at all times for the protection of persons, (including employees) and property. All existing structures, utilities, services, roads, trees, shrubbery, etc. shall be protected against damage or interrupted service at all times by the contractor during the term of contract, and the contractor shall be held responsible for any damage to the property occurring by reason of his/her operation on the property.

75. **PUBLIC ENTITY CRIMES**

In accordance Section 287.133 (2)(a), Florida Statutes: A person or affiliate who has been placed on the convicted Bidder list following a conviction for a public entity crime may not submit a bid on a contract to provide any goods or services to a public entity, may not submit a bid on a contract with a public entity for the construction or repair of a public building or public work, may not submit bids on leases of real property to a public entity, may not be awarded or perform work as a contractor, supplier, subcontractor

or consultant under a contract with any public entity, and may not transact business with any public entity in excess of the threshold amount provided Section 287.017, Florida Statutes, for CATEGORY TWO for a period of 36 Months from the date of being placed on the convicted Bidder list.

76. **PUBLIC RECORDS COMPLIANCE**

Contractor shall comply with public records laws as set forth in Section 119, Florida Statutes, and shall specifically:

a. Keep and maintain public records that ordinarily and necessarily would be required by the City in order to perform the service.
b. Provide the public with access to public records on the same terms and conditions that the City would provide the records and at a cost that does not exceed the cost provided in Section 119, Florida Statutes, or as otherwise provided by law.
c. Ensure that public records that are exempt or confidential and exempt from public records disclosure requirements are not disclosed except as authorized by law.
d. Meet all requirements for retaining public records and transfer to the City, at no cost, all public records in possession of the contractor upon termination of the contract and destroy any duplicate public records that are exempt or confidential and exempt from public records disclosure requirements. All records stored electronically must be provided to the City in a format that is compatible with the information technology systems of the City.

IF THE VENDOR HAS QUESTIONS REGARDING THE APPLICATION OF CHAPTER 119, FLORIDA STATUTES, TO THE VENDOR'S DUTY TO PROVIDE PUBLIC RECORDS RELATING TO THIS CONTRACT, CONTACT THE CUSTODIAN OF PUBLIC RECORDS AT 386-506-5563, cityclerk@port-orange.org, CITY OF PORT ORANGE, 1000 CITY CENTER CIRCLE, PORT ORANGE, FLORIDA, 32129.

The failure of contractor to comply with a public records request shall constitute a material breach of the contract.

77. **PUBLIC RECORDS/PUBLIC MEETINGS EXEMPTION STATEMENT**

Section 119.071(1)(c), Florida Statutes: **Any financial statement that an agency requires a prospective Bidder to submit in order to prequalify for bidding or for responding to a proposal for a road or any other public works project is exempt from s. 119.07(1) and s. 24(a), Art. I of the State Constitution. On June 2, 2011, Governor Scott signed HB 7223 into law.** This new legislation amends Florida's Public Records and Sunshine Laws, by expanding "exemptions" applicable to bids, proposals and replies to sealed competitive solicitations, and closes evaluation meetings from the public in certain instances. First, Section 119.071, Florida Statutes was amended to provide that sealed bids, proposals, or replies received by a Florida public agency shall remain exempt from disclosure until an intended decision is announced or until 30 days from the opening, whichever is earlier. This means that Bidders will not be able to procure a copy of their competitors' bids until an intended decision is reached or 30 days has elapsed since the time of the bid opening. The prior version of the law provided for a 10-day exemption. Next, Section 286.0113, Florida Statutes was amended to provide that meetings of persons appointed to evaluate bids or proposals and negotiate contracts shall be closed in certain circumstances. Specifically, portions of such meetings may now be closed to the public during oral presentations made by a Bidder, or where a Bidder answers questions. In other words, neither Bidders, nor the public will be permitted to sit in on meetings, unless this exemption is waived by the City Council, wherein their competitors are making presentations or discussing their bid or proposal with the committee members. The portions of these meetings must still be recorded and are subject to disclosure at the time of an intended award decision or within 30 days of the bid or proposal opening, whichever is earlier. Portions of the meetings that do not involve presentations, questions and answers, or negotiation strategy or negotiation sessions are still open to the public and competing Bidders, but the new law limits public attendance to portions of such meetings.

78. **PURCHASE ORDER AND DELIVERY**

The successful Bidder shall not deliver products or provide services without a City of Port Orange purchase order, signed by an authorized agent of the City of Port Orange. The fastest, most reasonable delivery time shall be indicated by the Bidder. Any special information concerning delivery should also be

included, on a separate sheet, if necessary. All items shall be shipped F.O.B. INSIDE DELIVERY unless otherwise stated in the specifications. This shall be understood to include bringing merchandise to the appropriate room or place designated by the using department. Every tender or delivery of goods must fully comply with all provisions of these requirements and the specifications including time, delivery and quality. Nonconformance shall constitute a breach which shall be rectified prior to expiration of the time for performance. Failure to rectify within the performance period shall be considered cause to reject future deliveries and cancellation of the contract by City of Port Orange without prejudice to other remedies provided by law. Where delivery times are critical, the City of Port Orange reserves the right to award accordingly.

79. **QUALITY**

All materials used for the manufacture or construction of any supplies, materials or equipment covered by this bid shall be new. The items bid must be new, the latest model, of the best quality and highest-grade workmanship unless otherwise specified in this bid by the City.

80. **QUESTIONS/INTERPRETATIONS**

Questions regarding interpretation of responses, solicitation results or solicitation awards shall be directed in writing to the Purchasing Division and referenced by the solicitation number no later than the last day for questions as specified in the solicitation documents. The City of Port Orange shall not be responsible for oral interpretations given by any City personnel or representative or others. The issuance of a written addendum is the only official method whereby interpretation, clarification or additional information can be given.

81. **RECORDS/AUDIT**

(a) The contractor agrees that the City, or any duly authorized representative, shall, until the expiration of five (5) years after final payment hereunder, have access to and the right to examine and copy any pertinent books, documents, papers and records of the contractor involving transactions related to this contract.

(b) The contractor further agrees to include in any subcontract for more than $10,000 entered into as a result of this contract, a provision to the effect that the subcontractor agrees that the City or any duly authorized representative shall, until the expiration of five (5) years after final payment under the subcontract, have access to and the right to examine and copy any pertinent books, documents, papers and records of such contractor involved in transactions related to such subcontract, or this contract. The term subcontract as used herein shall exclude purchase orders for public utility services at rates established for uniform applicability to the general public.

(c) The period of access provided in subparagraphs (a) and (b) above for records, books, documents and papers which may relate to any arbitration, litigation, or the settlement of claims arising out of the performance of this contract or any subcontract shall continue until any appeals, arbitration, litigation or claims shall have been finally disposed of.

82. **RECYCLED MATERIALS**

City of Port Orange encourages the use of products made of recycled materials.

83. **REJECTING OF RESPONSES/RE-BIDDING**

The City reserves the right to accept or reject any or all responses or parts of responses, to waive irregularities and technicalities, and to request re-bids. The City also reserves the right to award the contract on such items the City deems will best serve the interests of the City. The City further reserves the right to award the contract on a "split order" basis, or such combination as shall best serve the interests of the City unless otherwise specified. The City Council shall have the authority to reject any and all responses. If the lowest and best response exceeds the budgeted amount and the City Council does not make additional funds available, the Purchasing Division with the help of the department head shall have the authority to re-advertise the article or articles for bidding after making sufficient changes in the plans or specifications to bring the cost within the limit of the money available. (Code 1981, § 8-28.)

84. **REQUEST FOR ADDITIONAL INFORMATION**

Prior to the final solicitation selection, Bidders may be required to submit additional information which the City may deem necessary to further evaluate the Bidder's qualifications to perform under the terms of the solicitation and subsequent contract.

85. **REVIEW OF RESPONSES/SUBMISSIONS**

Each response will be reviewed to determine if the response is responsive to the submission requirements outlined in the solicitation. A responsive response is one which follows the requirements of the solicitation, includes all required documentation, is submitted in the format outlined in the solicitation, is of timely submission, and has the appropriate signatures as required on each document. Failure to comply with these requirements may deem your response non-responsive.

86. **RIGHT OF WITHDRAWAL**

A bid, proposal, statement, or reply may not be withdrawn before the expiration of one-hundred-twenty (120) days from the response due date.

87. **RIGHTS TO SOLICITATION SUBMITTED MATERIAL**

All responses, inquiries, or correspondence relating to or in reference to a solicitation, and all reports, charts, and other documentation submitted by Bidders shall become the property of the City when received.

88. **RULES, REGULATIONS AND LICENSING REQUIREMENT**

The Bidder shall comply with all laws, ordinances and regulations applicable to the services contemplated herein, including those applicable to conflict of interest and collusion. Bidders are presumed to be familiar with all federal, state and local laws, ordinances, codes and regulations that may in any way affect the services offered.

89. **SAMPLES**

Samples, when requested, must be furnished at, or before the bid opening, (unless otherwise specified), and will be delivered at no charge to the City. If not used and/or destroyed in testing, said sample(s) will, at the Bidder's request, be returned within thirty (30) days after bid award at the Bidder's expense. If requested by the City, samples and/or inspection of like items are to be made available in the central Florida area.

90. **SCRUTINIZED COMPANIES LIST**

The contractor shall refrain from any of the prohibited business activities with the Governments of Sudan and Iran as described in section 215.473, Florida Statutes. Pursuant to section 287.135(5), Florida Statutes, the City may immediately terminate this contract for cause if the contractor is found to have submitted a false certification or if the contractor is placed on the Scrutinized Companies with Activities in Sudan List or the Scrutinized Companies with Activities in the Iran Petroleum Energy Sector List or is engaged in business operations with Cuba or Syria during the term of the contract. The contractor shall provide a completed *Scrutinized Companies Certification* (Form 7.10), certifying the contractor's compliance with this section, prior to the execution of this contract.

91. **SEPARATION AND DISTRUBUTION**

The solicitation has been designed for transmittal as a complete document to interested parties. It is recommended that it not be separated; however, it may be reproduced in its entirety as additional distribution might dictate.

92. **SEVERABILITY**

If any section, subsection, paragraph, sentence, clause, phrase or word of these requirements or the specifications shall be held invalid, such holding shall not affect the remaining portions of these requirements and the specifications and it is hereby declared that such remaining portions would have been included in these requirements and the specifications as though the invalid portion had been omitted.

93. **SIGNATURE REQUIRED**

All responses must show the company name and be signed by a company officer or employee who has the authority to bind the company or firm by their signature. UNSIGNED RESPONSES WILL BE REJECTED. All manual signatures must be original - no rubber stamp, photocopy, etc.

94. **SIGNED RESPONSE CONSIDERED AN OFFER**

The signed response is considered an offer on the part of the Bidder, which offer shall be considered accepted upon approval by the City of Port Orange City Council (if required). The City of Port Orange will issue a purchase order or a letter of authorization to the successful Bidder, as authorization for delivery of the items awarded subject to requirements of detailed specifications and those contained herein. In the

event of default on the part of the Bidder after such acceptance, the City may take such action as it deems appropriate including legal action for damages or specific performance.

95. **SILENCE OF SPECIFICATIONS**

The apparent silence of specifications as to any detail, or the apparent omission from it of a detailed description concerning any point, shall be regarded as meaning that only the best commercial practice is to prevail and that only material and workmanship of the finest quality are to be used. All interpretations of specifications shall be made on the basis of this statement. The items furnished under this contract shall be new, unused of the latest product in production to commercial trade and shall be of the highest quality as to materials used and workmanship. Manufacturer furnishing these items shall be experienced in design and construction of such items and shall be an established supplier of the item bid.

96. **SOCIAL, POLITICAL, OR IDEOLOGICAL INTERESTS**

Pursuant to Florida Statute 287.05701, the governing body of a county, municipality, special district, or any other political subdivision of the state may not request documentation of or consider a vendor's social, political, or ideological interests when determining if the vendor is responsible. Furthermore, an awarding body may not give preference to a vendor based on the vendor's social, political, or ideological interests.

97. **SOLICITATION FORM COMPLETION, SUBMISSION AND RECEIPT OF RESPONSES**

Unless otherwise specified, Bidders shall use the solicitation forms supplied by the Purchasing Division. Responses shall be typewritten or handwritten in ink and shall bear the original signature of the Bidder's authorized representative. Responses containing erasures or corrections must be initialed by the Bidder in ink. Responses shall be submitted by mail or hand delivery only. No response will be accepted by facsimile transmission, e-mail or other electronic delivery. Responses submitted by mail shall be addressed to: City Clerk, City of Port Orange, Attn: Purchasing Division, Port Orange City Hall, 1000 City Center Circle, Port Orange, Florida 32129. Responses submitted by hand delivery shall be delivered to: City Clerk, Port Orange City Hall, 1000 City Center Circle, Port Orange, Florida 32129. Responses will be accepted until 2:30 PM EST on the date indicated in the solicitation documents or as addenda issued by the City. One (1) sealed envelope or package shall be submitted. The sealed envelope/package must contain the required forms and price proposals, where applicable, and will be evaluated and deemed responsive or non-responsive. All late responses will be returned to the Bidder and will not be opened. Bids (Envelope/Package) shall contain one (1) original and one (1) digital (CD or flash drive) version unless otherwise indicated in the legal advertisement and shall be mailed or delivered as set forth in the preceding paragraph in one (1) SEALED ENVELOPE/PACKAGE. The envelope/package shall be clearly marked on the outside to include the bid project name, bid number, name and address of the Bidder.

98. **STATE LICENSING REQUIREMENTS**

All entities defined under Chapters 607, 608, 617 or 620, Florida Statutes, seeking to do business with the City shall be on file and in good standing with the State of Florida's Department of State. Prior to making an offer, the Bidder shall have met the license, certification, and any other requirements of the state, county, city and/or other agency of authority with jurisdiction in such matters and should provide copies of documentation that evidence such qualifications with the response to the solicitation; and, that the Bidder shall provide follow-up evidence that the Bidder maintains such credentials throughout the period of the agreement. A copy of a current certificate of authority from the Secretary of State authorizing the Bidder/Proposer to do business in the State of Florida, or other evidence of legal authority to do business in the state, county, city and/or any other agency of authority should be provided with your response to the solicitation. Information concerning certification with the Secretary of State may be obtained at https://dos.myflorida.com/sunbiz/manage-business/certification/. Contract documents shall be executed by the entity's duly authorized officer as evidenced by entity records.

99. **SUBCONTRACTING**

The awarded Bidder will not sub-contract or enter into any subcontracting agreements pertaining to this contract, without obtaining written approval from the City of Port Orange.

100. **SUPPLEMENTAL MATERIALS**

Bidders are responsible for including all pertinent product data in the returned bid package. Literature, brochures, data sheets, specification information, completed forms requested as part of the bid package and any other facts which may affect the evaluation and subsequent contract award should be included. Materials such as legal documents and contractual agreements that the Bidder wishes to include as a

condition of the bid must also be in the returned bid package. Failure to include all necessary and proper supplemental materials may be cause to reject the entire bid.

101. **TAXES**

The City of Port Orange is exempt from all federal excise, state and local taxes unless otherwise stated in this document. A Tax Exemption Certificate will be furnished upon written request to the City of Port Orange Purchasing Division.

102. **TERM CONTRACTS**

Acceptance by the City of Port Orange of Bidder's offer shall be limited to the terms herein unless expressly agreed in writing by the City. If the contract is intended to cover a specific time-period, the term will be given in the bid specifications.

103. **TERMINATION**

For Convenience: The City of Port Orange reserves the right to terminate the contract or any work or delivery required hereunder, from time to time either in whole or part, whenever the City Manager of Port Orange shall determine that such termination is in the best interest of the City. Termination, in whole or in part, shall be effected by delivery of a Notice of Termination signed by the City Manager or his designee, postmarked or delivered to the contractor at least thirty (30) days prior to the date of termination, and specifically setting forth the effective date of termination.

For Default: The City may terminate the contract if the contractor breaches any of the terms therein, including, but not limited to, warranties of the contractor or if the contractor becomes insolvent or commits acts of bankruptcy. Such right of termination is in addition to and not in lieu of any other remedies which the City of Port Orange may have in law or equity. Default may be construed as, but is not limited to, failure to deliver the proper goods and/or services within the proper amount of time, and/or to properly perform any and all services required to the City's satisfaction and/or to meet all other obligations and requirements. The City may cancel the contract at any time for breach of contractual obligations by providing the contractor with a written notice of such cancellation. Should the City exercise its right to cancel the contract for such reasons, the cancellation shall become effective on the date as specified in the notice of cancellation sent to the contractor. In the event of default by the contractor, the City reserves the right to procure the item(s) bid from other sources and holds the contractor responsible for excess costs incurred as a result. City Council may elect to refrain from doing business with the contractor as stipulated in City Code 2-276 Suspension and Disbarment.

For Non-Appropriation of Funds: If funds are not appropriated for any succeeding fiscal years subsequent to the one in which this contract is entered into, for the purpose of this contract, then the City may terminate this contract upon thirty (30) days prior written notice to the contractor. Should termination be accomplished in accordance with this Section, the City shall be liable only for payments due through the date of termination.

104. **TITLE TRANSFER**

Title and Risk of Loss of goods shall not pass to City of Port Orange until City of Port Orange actually receives and takes possession of the goods at the point or points of delivery. Receiving times may vary with the using department. Generally, deliveries may be made between 8:30 a.m. and 3:00 p.m., Monday through Friday. The contractor is advised to consult the using department for instructions. The place of delivery shall be specified in the bid specification and/or on the purchase order as a "Deliver To:" address.

105. **UNBALANCED BID**

A mathematically unbalanced bid is when a Bidder places a high price on some items and a low price on other items in a unit price contract. A bid is materially unbalanced when there is reasonable doubt that acceptance of a mathematically unbalanced bid will result in the lowest overall cost to the City. Unbalanced bids will be rejected if the prices are deemed materially unbalanced.

106. **USE OF SOLICITATION FORMS**

The Bidder shall complete the appropriate solicitation form(s) included in the solicitation. All blanks on the solicitation forms shall be completed. If a question or confirmation is not applicable, it should be answered with an "N/A." Supplemental information may be attached to the solicitation forms. Failure to fully complete the appropriate solicitation forms may result in disqualification of the response. If additional space for a response is required, attach an additional page to the page on which the question is stated. Clearly identify the number of the question to which the response is attached. Further, if additional

solicitation form pages are needed, photocopy or replicate as appropriate, and attach such additional pages to the page on which the question or chart is stated. The signature of the Authorized Person or entity must be that of an officer, partner or a sole proprietor of the entity making the response. The original response, and each copy submitted shall contain an original signature on the *Bidder's Acknowledgement Form* contained in each solicitation.

107. **VARIANCES**

For purposes of response evaluation, Bidders must indicate any variances, no matter how slight, contained in the response. No variations or exceptions by a Bidder will be considered or deemed a part of the response submitted unless such variances or exceptions are listed in the response and referenced in the space provided on the response pages. If variances are not stated, or referenced as required, it will be assumed that the product or service complies with the City's terms, conditions and specifications. By receiving a response, the City does not necessarily accept any variances contained in the response. All variances submitted are subject to review and approval by the City. If any response contains material variances that, in the City's sole opinion, make that response conditional in nature, the City reserves the right to reject the response or part of the response that is declared, by the City, as conditional.

108. **WAIVER OF IRREGULARITIES**

The City of Port Orange reserves the right to waive and/or reject any non-substantial irregularity in responses received whenever such waiver or rejection is in the best interest of the City and/or it does not meet the minimum requirements set forth. All reasonably responsive responses will be considered. However, the City reserves the right to waive formalities or informalities in responses, to reject, with or without cause, any or all responses or portions of responses, or to interview or not interview individual Bidders, and to accept any responses or portions of responses deemed to be in the best interest of the City. The City Council shall grant the City Manager the ability to waive any and all non-substantial irregularities in any and all formal solicitations. (Code 1981, § 8-29; Ord. No. 2015-17, § 1, 5-19-2015)

109. **WARRANTIES**

Bidders shall furnish all data pertinent to warranties or guarantees which may apply to items in the response. Bidders may not limit or exclude any implied warranties. The Bidder warrants that products sold to the City shall conform to the standards established by the U.S. Department of Labor under the Occupational Safety and Health Act of 1970. In the event product does not conform to OSHA Standards, where applicable, City of Port Orange may return the product for correction or replacement at the Bidder's expense. If the Bidder fails to make the appropriate correction within a reasonable time, City of Port Orange may correct at the Bidder's expense.

[Remainder of page left intentionally blank]

SECTION 6 – SPECIAL REQUIREMENTS/INSTRUCTIONS

PERIOD OF OFFER VALIDITY:
Bids offered in this ITB must remain firm for a period of one-hundred-twenty (120) days from the ITB opening date.

AWARD RECOMMENDATION:
It is the intent of the City to award a contract to the lowest responsive and responsible Bidder as outlined in Section 3 and (Attachment 1) Schedule of Unit Pricing.

CONTRACT TERM:
Three hundred thirty (330) days from issuance of a Notice to Proceed from the City for substantial completion.

ELIGIBILITY OF BIDDER:
To be eligible to respond to this ITB, the Bidder must demonstrate proof of prior experience working with the services described in this ITB. Please provide eligibility experience with your submittal by completing Form 7.7 *Statement of Bidder's Qualifications* in its entirety.

PROOF OF E-VERIFY REGISTRATION
Bidders who do not include proof of E-Verify registration with Form 7.12 *E-Verify Affidavit* may be deemed non-responsive. Bidders must include printed pages from the E-Verify website showing company name and E-Verify registration number (My Company Profile).

LICENSES AND PERMITS
Bidder is responsible for all applicable local and state licenses, permits and fees.

PAYMENT & PERFORMANCE BONDS
If awarded, the Bidder must be able to obtain payment and performance bonds from a surety company licensed in Florida and must submit proof of their present bonding capacity with their bid submittal package in the form of a current (not older than 3 months) letter from Bidder's bonding agent. Bidder's bonding capacity must be equal to or greater than 100% of the total amount bid. Bidders who do not include their present bonding capacity letter in their submittal package may be deemed non-responsive.

Upon award, the successful Bidder will be required to furnish and pay for a Payment and Performance Bond equal to one hundred percent (100%) of the contract amount to be recorded by the City, with the Clerk of the Circuit Court, Volusia County, Florida. After recording, the City will furnish to the awarded Bidder the recording information for the bond to evidence that the Bidder has met the requirement of Florida law. The City will bill the cost of recording to the awarded Bidder.

BID BONDS:
The bidder must submit with their bid package a certified check or bank draft, payable to the City of Port Orange, FL or a satisfactory bid bond executed by the Bidder and an acceptable surety in the amount equal to (5%) of the total amount of the bid. If submitting a bid bond in lieu of a certified check or bank draft, the original bid bond must be included with bid submittal. If submitting a bid bond in lieu of a certified check or bank draft, Bidders who do not include their original bid bond with their submittal may be deemed non-responsive.

ADDITIONAL INSURANCE REQUIREMENTS
In addition to the insurance requirements outlined on page 24 of this ITB, the awarded Contractor is required to provide **Installation Floater** and **Contractor Pollution Liability** insurance. The Limits for Contractor Pollution Liability are outlined on page 24 and the Installation Floater limit is to be for the completed value of the contract.

NOTICE:
The City reserves the right to consider cooperative contracts, federal, state municipal etc., in the evaluation process. If in the City's best interest, the City may utilize a cooperative contract in lieu of making an award.

SAFETY:
The awarded Bidder shall exercise all due caution to exclude the public from the work area and especially from contact with any hazardous materials.

REPAIR OF DAMAGES:
It is the responsibility of the awarded Bidder to repair any damages incurred in the area that are directly related to the project. When damages occur, the City of Port Orange Representative is to be notified and shall inspect the repairs upon completion.

[Remainder of page left intentionally blank]

SECTION 7 – REQUIRED FORMS

FORM 7.1 – BID SUBMITTAL CHECKLIST

_____ Form 7.2 – Bidder's Acknowledgement

_____ Form 7.3 – Addendum and Change Order Procedure Acknowledgement

_____ Form 7.4 – Drug Free Preference Statement

_____ Form 7.5 – Public Entity Crimes Statement

_____ Form 7.6 – Anti-Collusion

_____ Form 7.7 – Statement of Bidder's Qualifications

_____ Form 7.8 – Professional References for Previous Experience

_____ Form 7.9 – List of Subcontractors

_____ Form 7.10 – Scrutinized Companies Certification

_____ Form 7.11 – Local Business Affidavit of Eligibility

_____ Form 7.12 – E-Verify Affidavit

_____ Form 7.13 – Debarment, Suspension and Other Responsibility Matters

_____ Form 7.14 – Affidavit of Compliance with Section 287.138, Florida Statutes

_____ Form 7.15 – No Submittal Response

_____ Appendix A, 44 C.F.R. Part 18 – Certification Regarding Lobbying

_____ (Attachment 1) – Schedule of Unit Pricing

_____ Current Bonding Capacity Letter (as outlined in Section 6)

_____ Copy of all currently held Licenses (Contractor, Sunbiz, etc.)

_____ Current tax receipt for Bidder's municipality

_____ Original Bid Bond or certified check or bank draft (as outlined in Section 6).

_____ Submission of one (1) original marked "ORIGINAL" and one (1) digital (flash drive) version in PDF format

BY: _____

Name of Business

_____

Authorized Signature

_____

Date

This document must be completed and returned with your Submittal

FORM 7.2 – BIDDER'S ACKNOWLEDGEMENT

I have carefully examined the Invitation to Bid (ITB), Instructions to Bidders, General and/or Special Conditions, Specifications and any other documents accompanying or made a part of this invitation.

I hereby propose to furnish the goods or services specified in the ITB at the prices or rates as finally negotiated. I agree that my bid will remain firm for a period of up to one-hundred-twenty (120) days in order to allow the City of Port Orange adequate time to evaluate the proposed bid. Furthermore, I agree to abide by all conditions of the ITB.

I certify that all information contained in the bid is truthful to the best of my knowledge and belief. I further certify that I am duly authorized to submit this bid on behalf of the Bidder/Contractor as its act and deed and that the Bidder/Contractor is ready, willing and able to perform if awarded the contract.

I further certify that this bid is made without prior understanding, contract, connection, discussion or collusion with any person, firm or corporation submitting a bid for the same product or service; no officer, employee or agent of the City of Port orange City Council or of any other Bidder interested in said ITB; and that the undersigned executed this Bidder's Acknowledgement with full knowledge and understanding of the matters therein contained and was duly authorized to do so.

I further certify that having read and examined the specifications and documents for the designated services and understanding the general conditions for the contract under which services will be performed, does hereby propose to furnish all labor, equipment and material to provide the services set forth in the ITB.

I hereby declare that the following listing states any clarifications, any and all variations from and exceptions to the requirements of the specifications and documents. The undersigned further declares that the "work" will be performed in strict accordance with such requirements and understands that any exceptions to the requirements of the specifications and documents may render the bid non-responsive.

NO EXCEPTIONS ALLOWED AFTER THE BID IS SUBMITTED:

Please check one: ☐I take NO exceptions. ☐Exceptions (list below; add additional pages if necessary):

_____

_____

_____ _____

Name of Business Mailing Address

_____ _____

Authorized Signature City, State & Zip Code

_____ _____

Printed Name and Title Telephone Number

_____ _____

Federal Identification No. E-mail Address

STATE OF:_____ COUNTY OF: _____

The foregoing instrument was acknowledged before me by means of ☐physical presence or ☐online notarization, this

_____ day of _____, 2024, by_____ and who:

☐Is personally known to me; or ☐ has produced _____ as identification.

_____Notary Public, State of _____

Printed, typed or stamped name, commission and expiration:

This document must be completed and returned with your Submittal

FORM 7.3 – ADDENDUM AND CHANGE ORDER PROCEDURE ACKNOWLEDGEMENT

ADDENDUM ACKNOWLEDGEMENT

I have carefully examined the Invitation to Bid (ITB), Instructions to Bidders, General and/or Special Conditions, Specification and any other documents accompanying or made a part of this ITB.

I acknowledge receipt and incorporation of the following addenda and the cost, if any, of such revisions has been included in the price of the bid proposal.

Addendum#_____ Date:_____ Addendum#_____ Date:_____

Addendum#_____ Date:_____ Addendum#_____ Date:_____

CHANGE ORDER PROCEDURE ACKNOWLEDGEMENT

If awarded the Contract for this Solicitation, I acknowledge that no oral statement of any person shall modify or otherwise change or affect the terms, conditions or specifications stated in the resulting contract. All change order requests shall be made in writing by the Contractor for review by the Contract Administrator for the City of Port Orange. No work shall be performed as set forth in the change order until the Contractor receives an executed Purchase Order for the requested change.

I acknowledge the above statements regarding Addendum Acknowledgement and Change Order Procedures:

_____
Name of Business

_____
Authorized Signature

_____
Printed Name and Title

STATE OF:_____ COUNTY OF: _____

The foregoing instrument was acknowledged before me by means of ☐physical presence or ☐online notarization, this

_____ day of _____, 2024, by_____ and who:

☐Is personally known to me; or ☐ has produced _____ as identification.
_____

Notary Public, State of _____
Printed, typed or stamped name, commission and expiration:

This document must be completed and returned with your Submittal

FORM 7.4 – DRUG-FREE PREFERENCE STATEMENT

IDENTICAL TIE BIDS – Preference shall be given to businesses with drug-free workplace programs. Whenever two or more bids, proposals, statements or replies are equal with respect to price, quality and service are received by the City for procurement of commodities or contractual services, a bid received from a business that certifies that it has implemented a drug-free workplace program shall be given preference in the award process. Established procedures for processing tie bids will be followed if none of the tied Bidders have a drug-free workplace program.

In order to have a drug-free workplace program, a business shall:

1. Publish a statement notifying employees that the unlawful manufacture, distribution, dispensing, possession or use of a controlled substance is prohibited in the workplace and specifying the actions that will be taken against employees for violations of such prohibition.

2. Inform employees about the dangers of drug abuse in the workplace, the business's policy of maintaining a drug-free workplace, any available drug counseling, rehabilitation and employee assistance programs and the penalties that may be imposed upon employees for drug abuse violations.

3. Give each employee engaged in providing the commodities or contractual services that are under a bid a copy of the statement specified in subsection (1).

4. In the statement specified in subsection (1), notify the employees that, as a condition of working on the commodities or contractual services that are under the bid, the employee will abide by the terms of the statement and will notify the employer of any conviction of, or plea of guilty or nolo contendere to, any violation of chapter 893 or of any controlled substance the law of the United States or any state, for a violation occurring in the workplace no later than five (5) days after such conviction.

5. Impose a sanction on or require the satisfactory participation in a drug abuse assistance or rehabilitation program if such is available in the employee's community, by an employee who is so convicted.

6. Make a good faith effort to continue to maintain a drug-free workplace through implementation of Section 287.087, Florida Statutes.

As an authorized representative of the firm, I certify that this firm complies fully with the above requirements.

_____
Name of Business

_____
Authorized Signature

_____
Printed Name and Title

STATE OF:_____ COUNTY OF: _____

The foregoing instrument was acknowledged before me by means of ☐physical presence or ☐online notarization, this _____ day of _____, 2024, by_____ and who:

☐Is personally known to me; or ☐ has produced _____ as identification.

_____
Notary Public, State of _____
Printed, typed or stamped name, commission and expiration:

This document must be completed and returned with your Submittal

FORM 7.5 – SWORN STATEMENT ON PUBLIC ENTITY CRIMES

UNDER SECTION 287.133(3)(A), FLORIDA STATUTES

(To be signed in the presence of a notary public or other authorized to administer oaths.)

Before me, the undersigned Authority, personally appeared affiant_____, who, being by me first duly sworn, made the following statement:

1. The business address of _____(name of Offeror or business) is

   _____.

2. My relationship to _____(name of Offeror or business) is _____

   _____(relationship such as sole proprietor, partner, president, vice president.)
3. I understand that a public entity crime as defined in Section 287.133 of the Florida Statutes includes a violation of any state or federal law by a person with respect to and directly related to the transaction of business with any public entity in Florida or with an agency or political subdivision of any other state or with the United States, including, but not limited to, any proposal or contract for goods or services to be provided to any public entity or such and agency or political subdivision and involving antitrust, fraud, theft, bribery, collusion, racketeering, conspiracy or material misrepresentation.
4. I understand that "convicted" or "conviction" is defined by the Florida Statutes to mean a finding of guilt or a conviction of a public entity crime, with or without an adjudication of guilt, in any federal or state trial court of record relating to charges brought by indictment or information after July 1, 1989, as a result of a jury verdict, non-jury trial, or entry of a plea of guilt or nolo contendere.
5. I understand that "affiliate" is defined by the Florida Statutes to mean (1) a predecessor or successor of a person or a corporation convicted of a public entity crime, or (2) an entity under the control of any natural person who is active in the management of the entity and who has been convicted of a public entity crime, or (3) those officers, directors, executives, partners, shareholders, employees, members, and agents who are active in the management of an affiliate, or (4) a person or corporation who knowingly entered into a joint venture with a person who has been convicted of a public entity crime in Florida during the preceding 36 months.
6. Neither the Offeror or contractor, nor any officer, director, executive, partner, shareholder, employee, member or agent who is active in the management of the Offeror or contractor, nor any affiliate of the Offeror or contractor has been convicted of a public entity crime subsequent to July 1, 1989. **(Draw a line through paragraph 6 if paragraph 7 below applies.)**
7. There has been a conviction of a public entity crime by the Offeror or contractor, or an officer, director, executive, partner, shareholder, employee, member or agent of the Offeror or contractor who is active in the management of the Offeror or contractor or an affiliate of the Offeror or contractor. A determination has been made pursuant to Section 287.133(3) by order of the Division of Administrative Hearings that it is not in the public interest for the name of the convicted person or affiliate to appear on the convicted Bidder list. The name of the convicted person or affiliate is: _____. A copy of the order of the Division Administrative Hearing is attached. **(Draw a line through paragraph 7 if paragraph 6 above applies)**

_____
Name of Business

_____
Authorized Signature

STATE OF:_____

COUNTY OF: _____

_____
Printed Name and Title

The foregoing instrument was acknowledged before me by means of ☐physical presence or ☐online notarization, this _____ day of _____, 2024, by_____ and who:

☐Is personally known to me; or ☐ has produced _____ as identification.

_____Notary Public, State of _____

Printed, typed or stamped name, commission and expiration:

This document must be completed and returned with your Submittal

FORM 7.6 – ANTI-COLLUSION

By signing this form, the Bidder agrees that this bid is made without any other understanding, agreement or connection with any person, corporation or firm submitting a bid for the same purpose and that the bid is in all respects fair and without collusion or fraud.

SIGN in ink in the space provided below. Unsigned bids will be considered incomplete and will be disqualified and rejected.

IT IS AGREED BY THE UNDERSIGNED BIDDER THAT THE SIGNING AND DELIVERY OF THE BID REPRESENTS THE BIDDER'S ACCEPTANCE OF THE TERMS AND CONDITIONS OF THE FOREGOING SPECIFICATIONS, CONTRACT AND PROVISION, AND IF AWARDED, THIS CONTRACT WILL REPRESENT THE AGREEMENT BETWEEN THE BIDDERS AND THE CITY OF PORT ORANGE.

NAME OF FIRM: _____

SIGNED BY: _____
(MUST BE SIGNED BY A COMPANY OFFICER OR AUTHORIZED AGENT)

PRINTED SIGNATURE: _____

TITLE: _____

ADDRESS: _____

CITY, STATE AND ZIP CODE: _____

TELEPHONE: _____

F.E.I.N.: _____

NO bid may be withdrawn for a period of one-hundred-twenty (120) days subsequent to the submittal of the bids without the consent of the City of Port Orange.

This document must be completed and returned with your Submittal

FORM 7.7 – STATEMENT OF BIDDER'S QUALIFICATIONS

The undersigned warrants that he or she is duly authorized to complete this document, and hereby affirms that the information contained in Form 7.7 is complete, true and correct to the best of his or her knowledge and belief. If necessary, question may be answered on separate paper and attached with any additional information that may be pertinent.

A. Name of Bidder: _____

B. Permanent main office address: _____

C. Date organized: _____

D. If a corporation, where incorporated: _____

E. How many years have you been engaged in the business under your present firm or trade name? _____

F. Contracts on hand: (List these, showing amount of each contract and the approximate anticipated dates of completion.) **USE SEPARATE SHEET & ATTACH TO SUBMITTAL**

G. General character of work performed by your company: _____

H. Have you ever failed to complete any work awarded to you? If so, where and why?_____

I. Have you ever defaulted on a contract? If so, where and why? _____

J. List your major equipment currently owned or leased: **USE SEPARATE SHEET & ATTACH TO SUBMITTAL**

K. Background and experience of the principal members of your organization, including the officers: USE **SEPARATE SHEET & ATTACH TO SUBMITTAL**

L. Credit currently available: $_____

M. Give bank name, contact name and phone number: _____

Will you, upon request, fill out a detailed financial statement and furnish any other information that may be required by the Owner? ☐Yes☐No

The undersigned hereby authorizes and requests any person, firm or corporation to furnish any information requested by the Owner in verification of the recitals compromising the Statement of Bidder's Qualifications.

_____
Name of Business

_____
Authorized Signature

STATE OF:_____

COUNTY OF: _____

_____
Printed Name and Title

The foregoing instrument was acknowledged before me by means of ☐physical presence or ☐online notarization, this _____ day of _____, 2024, by_____ and who:

☐Is personally known to me; or ☐ has produced _____ as identification.

_____Notary Public, State of _____

Printed, typed or stamped name, commission and expiration:

This document must be completed and returned with your Submittal

FORM 7.8 – PROFESSIONAL REFERENCES FOR PREVIOUS EXPERIENCE

The Bidder proposes that they are qualified to perform the referenced work and has successfully done so on recent projects similar in nature and size. The City reserves the right to check references and confirm information provided herein. **Please provide three (3) current and correct references from clients for similar services. (DO NOT include the City of Port Orange)**

1. Company Name: _____

   Contact Person: _____

   City, State: _____

   Telephone Number: _____

   Email Address: _____

   Description of goods/services provided: _____

   Contract Amount: _____

   Start/End Date of Contract: _____

2. Company Name: _____

   Contact Person: _____

   City, State: _____

   Telephone Number: _____

   Email Address: _____

   Description of goods/services provided: _____

   Contract Amount: _____

   Start/End Date of Contract: _____

3. Company Name: _____

   Contact Person: _____

   City, State: _____

   Telephone Number: _____

   Email Address: _____

   Description of goods/services provided: _____

   Contract Amount: _____

   Start/End Date of Contract: _____

This document must be completed and returned with your Submittal.

FORM 7.8 – PROFESSIONAL REFERENCES FOR PREVIOUS EXPERIENCE (page 2)

LISTING OF PREVIOUS EXPERIENCE
COMMERCIAL CLIENT LIST

The Bidder proposes that they are qualified to perform the referenced work and has successfully done so on recent projects similar in nature and size. A minimum of three (3) projects must be listed below. The Owner reserves the right to check references and confirm information provided herein.

List clients to whom you currently provide or have in the past provided equal or similar services to those required under the City's contract as outlined in this bid package. A minimum of three (3) projects shall be listed below in order to bid on this contract. The Owner reserves the right to check references and confirm information provided herein.

1. Contact Name: _____

   Phone: _____

   Current Client: ☐Yes ☐ No

   Number of years of service provided: _____

   Description of service: _____

   _____

2. Contact Name: _____

   Phone: _____

   Current Client: ☐Yes ☐ No

   Number of years of service provided: _____

   Description of service: _____

   _____

3. Contact Name: _____

   Phone: _____

   Current Client: ☐Yes ☐ No

   Number of years of service provided: _____

   Description of service: _____

   _____

This document must be completed and returned with your Submittal.

FORM 7.9 – LISTING OF SUBCONTRACTORS

The Bidder proposes that the following subcontractors are qualified to perform the referenced work and have successfully done so on recent projects similar in nature and size. All subcontractors whose work product accounts for 5% or more of the total contract value shall be listed. Upon approval of subcontractors listed, the successful **Bidder shall not substitute subcontractors without approval from the City Representative**. Bidder shall attach additional sheets as necessary.

Subcontractor No. 1

Name: _____

Description of Work: _____

Percent of Contract Price: _____

Previous Experience Together: ☐Yes ☐No

Subcontractor No. 2

Name: _____

Description of Work: _____

Percent of Contract Price: _____

Previous Experience Together: ☐Yes ☐No

Subcontractor No. 3

Name: _____

Description of Work: _____

Percent of Contract Price: _____

Previous Experience Together: ☐Yes ☐No

Subcontractor No. 4

Name: _____

Description of Work: _____

Percent of Contract Price: _____

Previous Experience Together: ☐Yes ☐No

Subcontractor No. 5

Name: _____

Description of Work: _____

Percent of Contract Price: _____

Previous Experience Together: ☐Yes ☐No

This document must be completed and returned with your submittal

FORM 7.10 SCRUTINIZED COMPANIES CERTIFICATION

(To be signed in the presence of a notary public or other officer authorized to administer oaths.)

SCRUTINIZED COMPANIES CERTIFICATION PURSUANT TO SECTION 287.135, FLORIDA STATUTES

I, _____, on behalf
(Print Name and Title)

of_____ ("Company"), certify that _____
(Company Name) (Company Name)

does not:
1. Participate in a boycott of Israel; and
2. Is not on the Scrutinized Companies with Boycott Israel List; and
3. Is not on the Scrutinized Companies with Activities in Sudan List; and
4. Is not on the Scrutinized Companies with Activities in the Iran Petroleum Energy Sector List; and
5. Has not engaged in business operations in Syria.

Submitting a false certification shall be deemed a material breach of contract. The City of Port Orange shall provide notice, in writing, to the Company of the City's determination concerning the false certification. The Company shall have ninety (90) days following receipt of the notice to respond in writing and demonstrate that the determination of false certification was made in error. If the Company does not demonstrate that the City's determination of false certification was made in error, then the City shall have the right to terminate the contract and seek civil remedies pursuant to Florida Statute § 287.135.

Section 287.135, Florida Statutes prohibits the City from: 1) Contracting with companies for goods or services in any amount if at the time of bidding on, submitting a proposal for, or entering into or renewing a contract if the company is on the Scrutinized Companies that Boycott Israel List, created pursuant to Section 215.4725, F.S. or is engaged in a boycott of Israel; and 2) Contracting with companies for goods or services over $1,000,000.00 that are on either the Scrutinized Companies with activities in the Iran Petroleum Energy Sector List, created pursuant to s. 215.473, or are engaged in business operations in Syria.

As the person authorized to sign on behalf of the Company, I hereby certify that the company identified above in the section entitled "Company Name" does not participate in any boycott of Israel, is not listed on the Scrutinized Companies that Boycott Israel List, is not listed on either the Scrutinized Companies with activities in the Iran Petroleum Energy Sector List and is not engaged in business operations in Syria. I understand that pursuant to Section 287.135, Florida Statutes, the submission of a false certification may subject the company to civil penalties, attorney's fees, and/or costs. I further understand that any contract with the City for goods or services may be terminated at the option of the City if the company is found to have submitted a false certification or has been placed on the Scrutinized Companies with Activities in Sudan List or the Scrutinized Companies with Activities in the Iran Petroleum Energy Sector List.

_____ _____
COMPANY NAME SIGNATURE

_____ _____
PRINT NAME TITLE

STATE OF FLORIDA COUNTY OF: _____

The foregoing instrument was acknowledged before me by means of ☐physical presence or ☐online notarization, this _____ day of _____, 2024, by_____ and who:

☐Is personally known to me; or ☐ has produced _____ as identification.

_____Notary Public, State of _____
Printed, typed or stamped name, commission and expiration:

This document to be completed and returned with your Submittal

FORM 7.11 – LOCAL BUSINESS AFFIDAVIT OF ELIGIBILITY

City of Port Orange

This declaration is executed under penalty of perjury of the laws to the United States and the State of Florida

THIS AFFIDAVIT IS SUBMITTED IN REFERENCE TO THE FOLLOWING SOLICITATION:

Project# *(as applicable)*: _____

Business Name: _____ Contact Person/Title: _____

Mailing Address: _____ City,State,Zip: _____

Phone Number: _____ Email address: _____

Physical Presence of Business: ☐Headquarters ☐Principal Place of Business

Within Legal Boundaries: ☐City of Port Orange ☐Volusia County ☐State of Florida

FEIN (Federal Employer Identification Number): _____

Business Structure: ☐Corporation ☐LLC ☐Partnership ☐Sole Proprietorship ☐Other (Specify): _____

****PLEASE ATTACH A VALID BUSINESS TAX RECEIPT OR OTHER SUCH DOCUMENTATION****

ATTESTATION – I understand that:
A local supplier or contractor is interpreted as a respondent to a solicitation, which as of the date of the solicitation opening, has a valid Business Tax Receipt (BTR) issued by the City of Port Orange to do business in the City of Port Orange which authorizes the supplier or contractor to provide the goods, services, or construction to be purchased and has a physical address located within the limits of Port Orange from which the supplier or contractor operates or performs business. A Post Office Box cannot be used to establish physical address. This local preference is only used as part of a tie breaker during a formal solicitation. The City uses Sunbiz to verify a supplier or contractor's business address. Sunbiz is a database on the Florida Department of State, Division of Corporations website and can be accessed using this link: https://dos.myflorida.com/sunbiz/.

Exemptions from Local Preference
Local preference is not permitted when (1) the purchase is funded, in whole or in part, by an entity prohibiting application of the preferences by grant agreement, contract or applicable federal, state or local law; or (2) emergency purchasing.

As an authorized representative of the Firm, I certify that this Firm complies fully with the above requirements.

_____
Name of Business

_____
Authorized Signature

STATE OF:_____

COUNTY OF: _____

_____
Printed Name and Title

The foregoing instrument was acknowledged before me by means of ☐physical presence or ☐online notarization, this _____ day of _____, 2024, by_____ and who:

☐Is personally known to me; or ☐ has produced _____ as identification.

_____
Notary Public, State of _____
Printed, typed or stamped name, commission and expiration:

This document must be completed and returned with your Submittal

FORM 7.12 – E-VERIFY AFFIDAVIT

CITY OF PORT ORANGE

CONTRACTOR E-VERIFY AFFIDAVIT
IN ACCORDANCE WITH SECTION 448.095, FLORIDA STATUTES

Project Name: _____

Solicitation Number: _____

I, the undersigned hereby certify that _____ (insert contractor company name) does not employ, contract with or subcontract with an unauthorized alien, and is otherwise in full compliance with Section 448.095, Florida Statutes.

I acknowledge that it is my responsibility to ensure full compliance with Section 448.095, Florida Statutes. I am aware enrollment in the E-Verify system for employers can be done at www.e-verify.gov.

A true and correct copy of _____ (insert contractor company name) proof of registration in the E-Verify system is attached to this Affidavit.

By affixing my signature below, I hereby affirm that I am duly authorized to bind the company reference herein and I will comply with all applicable E-Verify requirements.

_____ _____
Print or Type Name, Title Signature of Affiant

_____ _____
Federal Employer ID Number (FEIN) E-Verify Number

STATE OF FLORIDA

COUNTY OF: _____
The foregoing instrument was acknowledged before me by means of ☐physical presence or ☐online notarization, this _____ day of _____, 2024, by_____ and who:

☐Is personally known to me; or ☐ has produced _____ as identification.

_____Notary Public, State of _____
Printed, typed or stamped name, commission and expiration:

This document to be completed and returned with your Submittal

FORM 7.13 – CERTIFICATION REGARDING DEBARMENT, SUSPENSION AND OTHER RESPONSIBILITY MATTERS

Primary Covered Transactions

(To be completed by Prime Contractor)

1. The prospective participant certifies to the best of its knowledge and belief that it and its principals:
   (a) Are not presently debarred, suspended, proposed for debarment, declared ineligible or voluntarily excluded from covered transactions by and Federal department or agency;
   (b) Have not within a three-year period preceding this proposal bee convicted for had a civil judgement rendered against them for commission of fraud or a criminal offense in connection with obtaining, attempting to obtain or performing a public (Federal, State or local) transaction or contract under a public transaction; violation of Federal or State antitrust statutes or commission of embezzlement, theft forgery, bribery, falsification or destruction of records, making false statement or receiving stolen property.
   (c) Are not presently indicted for or otherwise criminally or civilly charged by a governmental entity (Federal, State or local) with commission of any of the offenses enumerated in paragraph 1. (b) of this certification;
   (d) Have not within a three-year period preceding this application/proposal had one or more public transactions (Federal, State or local) terminated for cause or default.
2. Where the prospective primary participant is unable to certify to any of the statements in this certification, such prospective participant shall attach an explanation to this proposal.

_____	_____
Organization Name	Bid Number or Project Name
_____	_____
Name and Title of Authorized Representative	Signature Date

This document must be completed and returned with your Submittal

FORM 7.14 – AFFIDAVIT OF COMPLIANCE WITH SECTION 287.138, FLORIDA STATUTES

AFFIDAVIT OF COMPLIANCE WITH SECTION 287.138, FLORIDA STATUTES CONTRACTING WITH FOREIGN ENTITIES OF CONCERN

The undersigned ("Affiant"), on behalf of the entity listed below ("Entity"), hereby attests under penalty of perjury as follows:

1. Affiant is the _____ of _____
   (Title) (Business Name)
   which does business in the State of Florida, hereinafter called the "Entity".
2. Entity is not owned by the government of a foreign country of concern, as defined in Section 287.138 (1)(c), Florida Statutes.
3. The government of a foreign country of concern does not have a controlling interest in Entity, as defined in Section 287.138 (1)(a), Florida Statutes.
4. Entity is not organized under the laws of, and does not have a principal place of business in, a foreign country of concern.
5. Entity is not owned or controlled by the government of a foreign country of concern.
6. For purposes of this affidavit, a foreign country of concern means the People's Republic of China, the Russian Federation, the Islamic Republic of Iran, the Democratic People's Republic of Korea, the Republic of Cuba, the Venezuelan regime of Nicolas Maduro, or the Syrian Arab Republic, including any agency of or any other entity of significant control of such foreign country of concern, as defined in Section 287.138(1)(c), Florida Statutes.

The undersigned is authorized to execute this affidavit on behalf of the Entity.

Date: _____, 20___ Signed: _____

Entity: _____ Name: _____

Title: _____

STATE OF: _____ COUNTY OF: _____

The foregoing instrument was acknowledged before me by means of ☐physical presence or ☐online notarization, this _____ day of _____, 2024, by_____ and who:

☐Is personally known to me; or ☐ has produced _____ as identification.

_____
Notary Public, State of Florida at Large: (seal)
Printed Name/Seal of Notary, Commission and Expiration Date:

My commission expires: _____

This document must be completed and returned with your Submittal

FORM 7.15 – NO BID RESPONSE

If your company will not be submitting a proposal in response to this solicitation, please complete this form and return via e-mail prior to the solicitation due date established within to:

City of Port Orange
Purchasing Division
1000 City Center Circle
Port Orange, FL 32129
purchdiv@port-orange.org

This information will assist the Purchasing Division in the preparation of future solicitations.

Solicitation: ITB #25-01 Lowes/Gateway Lift Station (LS82) Rehabilitation

Company Name: _____

Contact Person Name & Title: _____

Address: _____

Telephone: _____ Email Address: _____

Please check a reason for a "no response".

☐Specifications "too tight" or geared toward on brand or manufacturer (please explain below)

☐Insufficient time to respond

☐Specifications unclear (please explain below)

☐We do not offer this product/service or an equivalent

☐Our product schedule does not permit us to perform within stated timeline for the project

☐Unable to meet specifications

☐Unable to meet bond requirements

☐Unable to hold prices firm throughout the term of the contract period

☐Unable to meet insurance requirements

☐Other: _____

Print Name: _____

Signature: _____ Date:_____

Additional Information:

_____

_____

_____

_____

If submitting this form, only this form needs to be returned. It is not necessary to return the entire solicitation package.

APPENDIX A, 44 C.F.R. PART 18 – CERTIFICATION REGARDING LOBBYING Certification for Contracts, Grants, Loans, and Cooperative Agreements

(Required for each bid or offer exceeding $100,000)

The undersigned certifies, to the best of his or her knowledge and belief, that:

1. No federal appropriated funds have been paid or will be paid, by or on behalf of the undersigned, to any person for influencing or attempting to influence an officer or employee of an agency, a Member of Congress, an officer or employee of Congress, or an employee of a Member of Congress in connection with the awarding of any federal contract, the making of any federal grant, the making of any federal loan, the entering into of any cooperative agreement, and the extension, continuation, renewal, amendment, or modification of any federal contract, grant, loan, or cooperative agreement.

2. If any funds other than federal appropriated funds have been paid or will be paid to any person for influencing or attempting to influence an officer or employee of any agency, a Member of Congress, an officer or employee of Congress, or an employee of a Member of Congress in connection with this federal contract, grant, loan, or cooperative agreement, the undersigned shall complete and submit Standard Form-LLL, "Disclosure Form to Report Lobbying," in accordance with its instructions.

3. The undersigned shall require that the language of this certification be included in the award documents for all subawards at all tiers (including subcontracts, subgrants, and contracts under grants, loans, and cooperative agreements) and that all subrecipients shall certify and disclose accordingly.

4. This certification is a material representation of fact upon which reliance was placed when this transaction was made or entered into. Submission of this certification is a prerequisite for making or entering into this transaction imposed by section 1352, Title 31, U.S.C. Any person who fails to file the required certification shall be subject to a civil penalty of not less than $10,000 and not more than $100,000 for each such failure.

The Contractor, _____, certifies or affirms the truthfulness and accuracy of each statement of its certification and disclosure, if any. In addition, the Contractor understands and agrees that the provisions of 31 U.S.C. Chap. 38, Administrative Remedies for False Claims and Statements, apply to this certification and disclosure, if any.

_____

Signature of Contractor's Authorized Official

_____

Name & Title of Contractor's Authorized Official

Date: _____

(ATTACHMENT 1) – SCHEDULE OF UNIT PRICING

(ATTACHMENT 1) SCHEDULE OF UNIT PRICING
ITB #25-01
LOWES/GATEWAY LIFT STATION (LS82) REHABILITATION

Name of Business:	
Contact Person:	
Email Address:	
Authorized Signature:	

ALL UNIT PRICING IN ACCORDANCE WITH SECTION 3 - SCOPE OF WORK

Bidder must fill in each cell highlighted in GREEN, leaving no blank cells; return completed, signed form with bid submittal and include on USB/thumb drive.

ITEM #	DESCRIPTION	UNIT OF MEASURE	ESTIMATED QUANTITY	UNIT PRICE	EXTENDED PRICE
1	Mobilization/Demobilization	LS	1	$	$
2	Insurance, Performance and Payment Bond	LS	1	$	$
3	Preconstruction Video	LS	1	$	$
4	Construction Restoration - (site cleanup, seed and mulch)	LS	1	$	$
5	Lift Station Demolition, including but not limited to: - 2 suction lift pumps - Well top and internal piping - Lift Station discharge piping to existing plug valve - Sandblast concrete lift station interior - Electrical and associated conduit/piping	LS	1	$	$
6	Site Work (clearing and grubbing, grading, erosion control)	LS	1	$	$
7	Construction Testing (Pressure, Density Testing, etc.)	LS	1	$	$
8	Survey Layout & Record Drawings	LS	1	$	$
9	FDOT #57 Stone	CY	5	$	$
10	6" Concrete Pad and Driveway	CY	12	$	$
11	Lift Station Improvements, including but not limited to: - Liner - Replace lift station top and hatch - Replace interior suction piping, rails, etc. - Reduce Concrete fillet at bottom of well	LS	1	$	$
12	Submersible Pump (Including base elbows, anchor bolts, guide rail systems, access hatch, and startup)	EA	2	$	$
13	6-in Above Ground Valve Assembly (Piping, Fittings, Valves, etc.)	LS	1	$	$
14	6-in PVC Force Main (Including Fittings, Restraints, Adapters, etc.)	LS	30	$	$
15	6-in HDPE Force Main - Bypass Piping (Including Fittings, Restraints, Adapters, Camlocks, etc.)	LF	105	$	$
16	6-in Plug Valve	EA	2	$	$
17	Connection to Existing 8-in Force Main	EA	1	$	$
18	Hose Bibb Relocation	EA	1	$	$
19	Reclaim Piping Relocation	EA	1	$	$
20	Bypass Operations	LS	1	$	$
21	6-ft Viny-Coated Chain-link Fence	LF	125	$	$
22	Electrical I&C	LS	1	$	$
23	Permitting	LS	1	$80,000.00	$80,000.00
	LEGEND:			**FINAL PRICE**	$
	LS - LUMP SUM EA - EACH LF - LINEAR FEET CY - CUBIC YARD				

BID BOND

BID BOND

Bond No.:

KNOW ALL MEN BY THESE PRESENTS that _____, as Contractor, duly authorized to conduct business in the State of Florida, whose principal place of business is located at_____ , Tel.:_____, (hereinafter called "PRINCIPAL"), and_____, as SURETY, duly authorized to conduct business in the State of Florida, whose principal place of business is located at _____ _____, Tel:_____(hereinafter called "SURETY"), are held and firmly bound unto the City of Port Orange, Florida, as CITY, a Florida municipal corporation, whose address is City of Port Orange, 1000 City Center Circle, Port Orange, Florida 32129, Tel: (386) 506-5501, (hereinafter called "OBLIGEE" or CITY", in the penal sum of_____dollars and (_____)/100 ($_____), lawful money of the United States, for the payment of which sum shall and truly be made, whereof PRINCIPAL and SURETY bind themselves, their heirs, executors, administrators, successors and assigns, jointly and severally, firmly by these presents.

THE CONDITION OF THIS OBLIGATION IS SUCH that, whereas the Principal has submitted the accompanying bid, dated_____, 20_____ , for:

Project Name/Bid No.:

Project Address:

Legal Description: See Attached

Description of Work:

NOW, THEREFORE,

A. If the Principal shall not withdraw said bid withing one hundred twenty (120) days after date of opening of the same, and shall within ten (10) days after the prescribed forms are presented to it for signature, enter into a written contract with the City in accordance with the bid as accepted, and give bonds with good and sufficient surety or sureties, as may be required, for the faithful performance and proper fulfillment of such contract, then the above obligations shall be void and of no effect, otherwise to remain in full force and virtue.

B. In the event of the withdrawal of said bid within the period specified, or the failure to enter into such contract and give such bonds withing the time specified, if the principal shall pay the City the difference between the amount specified in said bid and the amount for which the City may procure the required work and supplies. If the latter amount be in excess of the former, then the above obligations then the above obligations shall be void and of no effect, otherwise to remain in full force and virtue.

IN WITNESS WHEREOF, the above parties have executed this instrument under their several seals, this _____day of_____, 20_____, the name and corporate seal of each corporate party being hereto affixed and these presents duly signed by its undersigned representative, pursuant to authority of its governing body.

Note: If the firm is a sole ownership or partnership including limited liability company, two (2) witnesses are required to attest the signature. If the firm is a corporation, then the corporate secretary shall attest and affix the corporate seal (Attach power of attorney to the original bid bond and financial statement of Surety Company).

PRINCIPAL:

_____
Signature

_____
Corporate Officer & Title

ATTEST:

_____
Signature

_____
Corporate Secretary (Affix Corporate Seal)

WITNESSESS:

_____

_____

ATTEST:

_____
Signature

_____
Corporate Secretary (Affix Corporate Seal)

SURETY:

_____
Attorney-in-Fact (signature)

_____
Name & Title

_____
Name of Local Resident Agent

_____
City, State, Zip

_____
Telephone:
A.M. Best No.:_____ NAIC No.:_____

STATE OF _____

COUNTY OF _____

Before me this day personally appeared _____ (affiant), who, being duly sworn, deposes and says that he/she is the Attorney-in-Fact for the _____(corporate surety) and that this person has been authorized by _____ (corporate surety) to execute the foregoing bond on behalf of the Contractor named therein in favor of the City of Port Orange, Florida.

_____
Signature of Affiant

The foregoing instrument was acknowledged before me by means of ☐physical presence or ☐online notarization, this _____ day of _____, 2024, by_____ and who:

☐Is personally known to me; or ☐ has produced _____ as identification.

_____

Notary Public, State of _____
Printed, typed or stamped name, commission and expiration:

END OF BID BOND

This document must be completed and returned with your Submittal

FRONT PAGE FOR BOND REQUIRED BY SECTION 255.05, F.S.

PAYMENT AND PERFORMANCE BOND

(Public Works)

Notice and Time Limitations Must Be In Accordance
With Section 255.05(2), (8) and (10), Florida Statutes

BOND NO. _____

PRINCIPAL:
Developer or Contractor: _____
Principal Business Address: _____
_____
Contact Person: _____
Phone Number: _____

SURETY: _____
Address: _____
_____

Contact Person: _____
Phone Number: _____

OWNER: City of Port Orange, Florida, a chartered municipal corporation
1000 City Center Circle
Port Orange, Florida 32129-4144
Contact Person: City Manager
Phone Number: (386) 506-5501

Amount: $_____ **City Case: _____**

Description of Work: _____

Project Location: _____
_____

Legal Description: _____

Front Page

All other pages are subsequent to this page regardless of any numbers that may be printed thereon.

DRAFT

Bond No._____

COMBINATION PAYMENT AND PERFORMANCE BOND
FOR
PUBLIC CONSTRUCTION

per Section 255.05, Florida Statutes
Guaranty for Construction of Public Improvements

BY THIS BOND, We, _____, as Principal, and _____, a corporation, as Surety, are bound to_____, aFlorida municipal corporation, herein called "Owner" or sometimes referred to as "City," in the sum of _____ **AND____/100 DOLLARS** (**$**_____), for payment of which we bind ourselves, our heirs, personal representatives, successors, and assigns, jointly and severally.

THE CONDITION OF THIS BOND is that if Principal:

1. Performs the terms of that certain Standard Contract for Services, having an effective date of _____, entered into by and between the Principal and the City, for Police Department Duct/HVAC Mold Remediation, hereinafter referred to as the "Contract," being made a part of this bond by reference, at the times and in the manner prescribed in the Contract; and

2. Promptly makes payments to all claimants, as defined in Section 255.05(1), Florida Statutes, supplying Principal with labor, materials, or supplies, used directly or indirectly by Principal in the prosecution of the work provided for in the Contract (the "Work"); and

3. Pays Owner all losses, damages, delay damages (including contractually authorized liquidated damages), expenses, costs, and attorney's fees, including appellate proceedings, that Owner sustains because of a breach or material breach by Principal under the Contract documents; and

4. Performs the guarantee of all work and materials furnished under the Contract for the time specified in the Contract, then this bond is void; otherwise it remains in full force.

Notice of Nonpayment and Time Limitations

Any action instituted by a claimant under this bond for payment must be in accordance with the notice and time limitation provisions in Sections 255.05(2), (8) and (10), Florida Statutes.

Any changes in or under the contract documents and compliance or noncompliance with any formalities connected with the contract or the changes does not affect Surety's obligation under this bond.

DRAFT

IN WITNESS WHEREOF, this performance and payment bond is executed and shall be deemed an original, this__, day of_____, 20___.

Attest:

_____
(Principal)

_____ By:_____
(As to Corporate Principal) Secretary Name, Title

_____ *(Corporate Seal)*
(Witness to Principal)

_____
(Surety)

_____ By:_____
(Witness to Surety)

Name: _____
(Attorney-in-Fact)

(Corporate Seal)

NOTE: ***Date of BOND must not be prior to date of Contract.*** *If Developer/Principal is Partnership, all partners should executeBOND. All BONDS signed by an agent must be accompanied by a certified copy of the authority to act.*

IMPORTANT: Surety companies executing BONDS must appear on the Treasury Department's most current list (Circular 570 asamended) and be authorized to transact business in the State of Florida.

DRAFT

This affidavit must be completed and returned by the Awarded Bidder, upon issuance of a Notice of Intent to Award by the Purchasing Division of the City of Port Orange.

LEASED EMPLOYEE AFFIDAVIT

EXHIBIT CONTRACT #_____

☐ I hereby certify that I do not utilize an employee leasing company or employ leased employees. I further agree to notify the City in the event these circumstances change.

OR

☐ I affirm that an employee leasing company provides my workers' compensation coverage. I further understand that my contract with the employee leasing company limits my workers' compensation coverage to enrolled worksite employees only. My leasing arrangement does not cover un-enrolled worksite employees, independent contractors, uninsured sub-contractors or casual labor exposure.

I hereby certify that 100% of my workers are covered as worksite employees with the employee leasing company. I certify that I do not hire any casual or uninsured labor outside the employee leasing agreement. I agree to notify the City in the event that I have any workers not covered by the employee leasing workers' compensation policy. In the event that I have any workers not subject to the employee leasing arrangement, I agree to obtain a separate workers' compensation policy to cover these workers. I further agree to provide the City with a certificate of insurance providing proof of workers' compensation coverage prior to these workers entering any City jobsite.

I further agree to notify the City if my employee leasing arrangement terminates with the employee leasing company and I understand that I am required to furnish proof of replacement workers' compensation coverage prior to the termination of the employee leasing arrangement.

I certify that I have workers' compensation coverage for all of my workers through the employee leasing arrangement specified below:

Name of Employee Leasing Company: _____

Workers' Compensation Carrier: _____

A.M. Best Rating of Carrier: _____

Inception Date of Leasing Arrangement: _____

I further agree to notify the City in the event that I switch employee leasing companies. I recognize that I have an obligation to supply an updated workers' compensation certificate to the City that documents the change of carrier.

I hereby attest that the information provided in this affidavit is accurate. In addition, I certify that I have read and understand the above statements regarding my responsibility under the workers' compensation coverage.

Name of Contractor: _____

Signature of Owner/Officer: _____

Title: _____ Date: _____

This affidavit must be completed and returned by the Awarded Bidder, upon issuance of a Notice of Intent to Award by the Purchasing Division of the City of Port Orange. Please note, the City of Port Orange does not accept exemptions for Workers' Compensation coverage.

AFFIDAVIT REGARDING WORKERS' COMPENSATION

State of _____

County of _____

I, _____, being duly sworn according to law, deposes and says (it, he, she, they) have accepted the Workers' Compensation laws of the State of Florida, with its supplements and amendments and has insured (its, his, her, their) liability there under accordance with the terms of sail Laws with the _____ Company, under the terms of Policy Number _____ for a period from _____, 20____ to _____, 20____.

WITNESS:

By:_____

Name:_____

CONTRACTOR:

Company:_____

By:_____

Name/Title: _____

Sworn to/Affirmed and subscribed before me this _____ day of _____, 20____, by _____, who is personally known to me or who produced _____ as identification.

_____

NOTARY PUBLIC – STATE OF

Type or Print Name:_____

Commission No.: _____

Commission Expires:_____

(Seal)

IMPORTANT: This certificate must be completed and returned by the Awarded Bidder, upon issuance of a Notice of Intent to Award by the Purchasing Department of the City of Port Orange.

HUMAN TRAFFICKING AFFIDAVIT
(SECTION 787.06, FLORIDA STATUTES)

STATE OF FLORIDA §
§
COUNTY OF VOLUSIA §

The undersigned ("Affiant"), on behalf of the entity listed below ("Entity"), after being duly sworn, hereby attests as follows:

1. My name is _____. I am over the age of Twenty-one years old. I am the _____ of _____, a non- governmental entity which does
   (Title) **(Business Name)**
   business in the State of Florida, hereinafter called the "Entity."
2. I have personal knowledge of each and every statement of fact contained herein, and each and every statement of fact is true and correct.
3. Entity does not use coercion, as defined in Section 787.06, Florida Statutes, for labor or services.
4. The undersigned is an officer or representative of the entity and is authorized to execute this affidavit on behalf of the Entity.
5. Under penalties of perjury, I declare that I have read the foregoing Human Trafficking Affidavit and that the facts stated herein are true.

Further Affiant sayeth not.

Date: _____, 20___ Signed: _____
Print Name: _____
Title: _____

SUBSCRIBED AND SWORN before me by means of [_XX_] physical presence or [__] online notarization on the ____ day of _____, 20__ by _____ as _____ on behalf of _____ who is personally known to me or who has produced _____ as identification.

(Notary Seal)

_____
Notary Public, State of Florida
Printed name, commission and expiration of commission term

AGREEMENT BETWEEN OWNER AND CONTRACTOR FOR CONSTRUCTION CONTRACT (STIPULATED PRICE)

This Agreement is by and between **[name of contracting entity]** ("Owner") and City of Port Orange, 1000 City Center Circle, Port Orange, Florida 32129 ("Contractor").

Terms used in this Agreement have the meanings stated in the General Conditions and the Supplementary Conditions.

Owner and Contractor hereby agree as follows:

ARTICLE 1—WORK

1.01 Contractor shall complete all Work as specified or indicated in the Contract Documents. The Work is generally described as follows:

_____.

Formatted: Font: Italic

ARTICLE 2—THE PROJECT

~~2.01~~ The Project, of which the Work under the Contract Documents is a part, is generally described as follows:

_____.

Formatted: Indent: Left: 0", First line: 0"

ARTICLE 3—ENGINEER

3.01 ~~The Owner has retained~~The part of the project that pertains to the Work has been designed by the Project Engineer, _____("Engineer")_____., and shall ~~to~~ act as Owner's representative, assume all duties and responsibilities ~~of Engineer~~, and have the rights and authority assigned to Engineer in the Contract Documents in connection with the completion of the Work in accordance with the Contract Documents.

3.02 ~~The part of the Project that pertains to the Work has been designed by~~

ARTICLE 4—CONTRACT TIMES

4.01 *Time is of the Essence*

A. All time limits for Milestones, if any, Substantial Completion, and completion and readiness for final payment as stated in the Contract Documents are of the essence of the Contract.

4.02 *Contract Times: Dates*

A. The Work will be substantially complete on or before **[date]**, and completed and ready for final payment in accordance with Paragraph 15.06 of the General Conditions on or before **[date]**.

EJCDC® C-520, Agreement between Owner and Contractor for Construction Contract (Stipulated Price).
Copyright© 2018 National Society of Professional Engineers, American Council of Engineering Companies, and American Society of Civil Engineers. All rights reserved.

4.03 *Contract Times: Days*

A. The Work will be substantially complete within **[number]** days after the date when the Contract Times commence to run as provided in Paragraph 4.01 of the General Conditions, and completed and ready for final payment in accordance with Paragraph 15.06 of the General Conditions within **[number]** days after the date when the Contract Times commence to run.

~~4.04 *Milestones*~~

~~A. Parts of the Work must be substantially completed on or before the following Milestone(s):~~

~~1. Milestone 1~~

~~2. Milestone 2~~

~~3. Milestone 3~~

4.05 *Liquidated Damages*

A. Contractor and Owner recognize that time is of the essence as stated in Paragraph 4.01 above and that Owner will suffer financial and other losses if the Work is not completed and Milestones not achieved within the Contract Times, as duly modified. The parties also recognize the delays, expense, and difficulties involved in proving, in a legal or arbitration proceeding, the actual loss suffered by Owner if the Work is not completed on time. Accordingly, instead of requiring any such proof, Owner and Contractor agree that as liquidated damages for delay (but not as a penalty):

1. *Substantial Completion:* Contractor shall pay Owner $0.00 for each day that expires after the time (as duly adjusted pursuant to the Contract) specified above for Substantial Completion, until the Work is substantially complete.

2. *Completion of Remaining Work:* After Substantial Completion, if Contractor shall neglect, refuse, or fail to complete the remaining Work within the Contract Times (as duly adjusted pursuant to the Contract) for completion and readiness for final payment, Contractor shall pay Owner $0.00 for each day that expires after such time until the Work is completed and ready for final payment.

~~3. *Milestones:* Contractor shall pay Owner $_____ for each day that expires after the time (as duly adjusted pursuant to the Contract) specified above for achievement of Milestone 1, until Milestone 1 is achieved, or until the time specified for Substantial Completion is reached, at which time the rate indicated in Paragraph 4.05.A.1 will apply, rather than the Milestone rate.~~

~~4. Liquidated damages for failing to timely attain Milestones, Substantial Completion, and final completion are not additive, and will not be imposed concurrently.~~

B. If Owner recovers liquidated damages for a delay in completion by Contractor, then such liquidated damages are Owner's sole and exclusive remedy for such delay, and Owner is precluded from recovering any other damages, whether actual, direct, excess, or consequential, for such delay, except for special damages (if any) specified in this Agreement.

~~C. *Bonus:* Contractor and Owner further recognize the Owner will realize financial and other benefits if the Work is completed prior to the time specified for Substantial Completion. Accordingly, Owner and Contractor agree that as a bonus for early completion, Owner shall~~

EJCDC® C-520, Agreement between Owner and Contractor for Construction Contract (Stipulated Price).
Copyright© 2018 National Society of Professional Engineers, American Council of Engineering Companies, and American Society of Civil Engineers. All rights reserved.

~~pay Contractor $_____ for each day prior to the time specified above for Substantial Completion (as duly adjusted pursuant to the Contract) that the Work is substantially complete. The maximum value of the bonus will be limited to $_____.~~

~~4.06 *Special Damages*~~

~~A. Contractor shall reimburse Owner (1) for any fines or penalties imposed on Owner as a direct result of the Contractor's failure to attain Substantial Completion according to the Contract Times, and (2) for the actual costs reasonably incurred by Owner for engineering, construction observation, inspection, and administrative services needed after the time specified in Paragraph 4.02 for Substantial Completion (as duly adjusted pursuant to the Contract), until the Work is substantially complete.~~

~~B. After Contractor achieves Substantial Completion, if Contractor shall neglect, refuse, or fail to complete the remaining Work within the Contract Times, Contractor shall reimburse Owner for the actual costs reasonably incurred by Owner for engineering, construction observation, inspection, and administrative services needed after the time specified in Paragraph 4.02 for Work to be completed and ready for final payment (as duly adjusted pursuant to the Contract), until the Work is completed and ready for final payment.~~

~~C. The special damages imposed in this paragraph are supplemental to any liquidated damages for delayed completion established in this Agreement.~~

ARTICLE 5—CONTRACT PRICE

5.01 Owner shall pay Contractor for completion of the Work in accordance with the Contract Documents, the amounts that follow, subject to adjustment under the Contract:

A. For all Work other than Unit Price Work, a lump sum of $_____.

All specific cash allowances are included in the above price in accordance with Paragraph 13.02 of the General Conditions.

B. For all Unit Price Work, an amount equal to the sum of the extended prices (established for each separately identified item of Unit Price Work by multiplying the unit price times the actual quantity of that item).

Unit Price Work					
Item No.	**Description**	**Unit**	**Estimated Quantity**	**Unit Price**	**Extended Price**
				$	$
				$	$
				$	$
				$	$
				$	$
Total of all Extended Prices for Unit Price Work (subject to final adjustment based on actual quantities)					$

The extended prices for Unit Price Work set forth as of the Effective Date of the Contract are based on estimated quantities. As provided in Paragraph 13.03 of the General Conditions,

Copyright© 2018 National Society of Professional Engineers, American Council of Engineering Companies, and American Society of Civil Engineers. All rights reserved.

estimated quantities are not guaranteed, and determinations of actual quantities and classifications are to be made by Engineer.

C. Total of Lump Sum Amount and Unit Price Work (subject to final Unit Price adjustment) $_____.

D. For all Work, at the prices stated in Contractor's Bid, attached hereto as an exhibit.

ARTICLE 6—PAYMENT PROCEDURES

6.01 *Submittal and Processing of Payments*

A. Contractor shall submit Applications for Payment in accordance with Article 15 of the General Conditions. Applications for Payment will be processed by Engineer as provided in the General Conditions.

6.02 *Progress Payments; Retainage*

A. Owner shall make progress payments on the basis of Contractor's Applications for Payment on or about the **[ordinal number, such as 5th]** day of each month during performance of the Work as provided in Paragraph 6.02.A.1 below, provided that such Applications for Payment have been submitted in a timely manner and otherwise meet the requirements of the Contract. All such payments will be measured by the Schedule of Values established as provided in the General Conditions (and in the case of Unit Price Work based on the number of units completed) or, in the event there is no Schedule of Values, as provided elsewhere in the Contract.

1. Prior to Substantial Completion, progress payments will be made in an amount equal to the percentage indicated below but, in each case, less the aggregate of payments previously made and less such amounts as Owner may withhold, including but not limited to liquidated damages, in accordance with the Contract.

a. _____% percent of the value of the Work completed (with the balance being retainage).

1) If 50 percent or more of the Work has been completed, as determined by Engineer, and if the character and progress of the Work have been satisfactory to Owner and Engineer, then as long as the character and progress of the Work remain satisfactory to Owner and Engineer, there will be no additional retainage; and

b. _____% percent of cost of materials and equipment not incorporated in the Work (with the balance being retainage).

B. Upon Substantial Completion, Owner shall pay an amount sufficient to increase total payments to Contractor to _____% percent of the Work completed, less such amounts set off by Owner pursuant to Paragraph 15.01.E of the General Conditions, and less _____% percent of Engineer's estimate of the value of Work to be completed or corrected as shown on the punch list of items to be completed or corrected prior to final payment.

6.03 *Final Payment*

A. Upon final completion and acceptance of the Work, Owner shall pay the remainder of the Contract Price in accordance with Paragraph 15.06 of the General Conditions.

**EJCDC® C-520, Agreement between Owner and Contractor for Construction Contract (Stipulated Price).
Copyright© 2018 National Society of Professional Engineers, American Council of Engineering Companies, and American Society of Civil Engineers. All rights reserved.**

6.04 *Consent of Surety*

A. Owner will not make final payment, or return or release retainage at Substantial Completion or any other time, unless Contractor submits written consent of the surety to such payment, return, or release.

6.05 *Interest*

A. All amounts not paid when due will bear interest at the rate of _____ % percent per annum.

ARTICLE 7—CONTRACT DOCUMENTS

7.01 *Contents*

A. The Contract Documents consist of all of the following:

1. This Agreement (pages __ to __, inclusive).
2. Bonds:
   a. Combination Payment and Performance bond, ~~(~~together with power of attorney~~)~~, (pages __ to __, inclusive).
   ~~b. Payment bond (together with power of attorney).~~
3. General Conditions (pages __ to __, inclusive).
~~4. Supplementary Conditions.~~
5. Specifications as listed in the table of contents of the project manual (copy of list attached).
6. Drawings (not attached but incorporated by reference) consisting of _____ sheets with each sheet bearing the following general title: **[title on Drawings]**.
7. Drawings listed on the attached sheet index.
8. Addendum No. __ ~~a~~ (pages __ to __, inclusive).
9. Exhibits to this Agreement (enumerated as follows):
   a. **[list exhibits]** (pages __ to __, inclusive).
10. The following which may be delivered or issued on or after the Effective Date of the Contract and are not attached hereto:
    a. Notice to Proceed.
    b. Work Change Directives.
    c. Change Orders.
    d. Field Orders.
    e. Warranty Bond, if any.

B. The Contract Documents listed in Paragraph 7.01.A are attached to this Agreement (except as expressly noted otherwise above).

C. There are no Contract Documents other than those listed above in this Article 7.

**EJCDC® C-520, Agreement between Owner and Contractor for Construction Contract (Stipulated Price).
Copyright© 2018 National Society of Professional Engineers, American Council of Engineering Companies, and American Society of Civil Engineers. All rights reserved.**

D. The Contract Documents may only be amended, modified, or supplemented as provided in the Contract.

ARTICLE 8—REPRESENTATIONS, CERTIFICATIONS, AND STIPULATIONS

8.01 *Contractor's Representations*

A. In order to induce Owner to enter into this Contract, Contractor makes the following representations:

1. Contractor has examined and carefully studied the Contract Documents, including Addenda.

2. Contractor has visited the Site, conducted a thorough visual examination of the Site and adjacent areas, and become familiar with the general, local, and Site conditions that may affect cost, progress, and performance of the Work.

3. Contractor is familiar with all Laws and Regulations that may affect cost, progress, and performance of the Work.

4. Contractor has carefully studied the reports of explorations and tests of subsurface conditions at or adjacent to the Site and the drawings of physical conditions relating to existing surface or subsurface structures at the Site that have been identified in the Supplementary Conditions, with respect to the Technical Data in such reports and drawings.

5. Contractor has carefully studied the reports and drawings relating to Hazardous Environmental Conditions, if any, at or adjacent to the Site that have been identified in the Supplementary Conditions, with respect to Technical Data in such reports and drawings.

6. Contractor has considered the information known to Contractor itself; information commonly known to contractors doing business in the locality of the Site; information and observations obtained from visits to the Site; the Contract Documents; and the Technical Data identified in the Supplementary Conditions or by definition, with respect to the effect of such information, observations, and Technical Data on (a) the cost, progress, and performance of the Work; (b) the means, methods, techniques, sequences, and procedures of construction to be employed by Contractor; and (c) Contractor's safety precautions and programs.

7. Based on the information and observations referred to in the preceding paragraph, Contractor agrees that no further examinations, investigations, explorations, tests, studies, or data are necessary for the performance of the Work at the Contract Price, within the Contract Times, and in accordance with the other terms and conditions of the Contract.

8. Contractor is aware of the general nature of work to be performed by Owner and others at the Site that relates to the Work as indicated in the Contract Documents.

9. Contractor has given Engineer written notice of all conflicts, errors, ambiguities, or discrepancies that Contractor has discovered in the Contract Documents, and of discrepancies between Site conditions and the Contract Documents, and the written resolution thereof by Engineer is acceptable to Contractor.

Copyright© 2018 National Society of Professional Engineers, American Council of Engineering Companies, and American Society of Civil Engineers. All rights reserved.

10. The Contract Documents are generally sufficient to indicate and convey understanding of all terms and conditions for performance and furnishing of the Work.

11. Contractor's entry into this Contract constitutes an incontrovertible representation by Contractor that without exception all prices in the Agreement are premised upon performing and furnishing the Work required by the Contract Documents.

8.02 *Contractor's Certifications*

A. Contractor certifies that it has not engaged in corrupt, fraudulent, collusive, or coercive practices in competing for or in executing the Contract. For the purposes of this Paragraph 8.02:

1. "corrupt practice" means the offering, giving, receiving, or soliciting of anything of value likely to influence the action of a public official in the bidding process or in the Contract execution;

2. "fraudulent practice" means an intentional misrepresentation of facts made (a) to influence the bidding process or the execution of the Contract to the detriment of Owner, (b) to establish Bid or Contract prices at artificial non-competitive levels, or (c) to deprive Owner of the benefits of free and open competition;

3. "collusive practice" means a scheme or arrangement between two or more Bidders, with or without the knowledge of Owner, a purpose of which is to establish Bid prices at artificial, non-competitive levels; and

4. "coercive practice" means harming or threatening to harm, directly or indirectly, persons or their property to influence their participation in the bidding process or affect the execution of the Contract.

8.03 *Standard General Conditions*

A. Owner stipulates that if the General Conditions that are made a part of this Contract are EJCDC® C-700, Standard General Conditions for the Construction Contract (2018), published by the Engineers Joint Contract Documents Committee, and if Owner is the party that has furnished said General Conditions, then Owner has plainly shown all modifications to the standard wording of such published document to the Contractor, through a process such as highlighting or "track changes" (redline/strikeout), or in the Supplementary Conditions.

ARTICLE 9—MISCELLANEOUS

9.01 *Assignment of Contract*

A. No assignment by a party hereto of any rights under or interests in the Contract will be binding on another party hereto without the written consent of the party sought to be bound; and, specifically but without limitation, moneys that may become due and moneys that are due may not be assigned without such consent (except to the extent that the effect of this restriction may be limited by law), and unless specifically stated to the contrary in any written consent to an

Copyright© 2018 National Society of Professional Engineers, American Council of Engineering Companies, and American Society of Civil Engineers. All rights reserved.

assignment, no assignment will release or discharge the assignor from any duty or responsibility under the Contract Documents.

9.02 *Successors and Assigns*

Owner and Contractor each binds itself, its partners, successors, assigns, and legal representatives to the other party hereto, its partners, successors, assigns, and legal representatives in respect to all covenants, agreements, and obligations contained in the Contract Documents.

9.03 *Severability*

Any provisions or part of the Contract Documents held to be void or unenforceable under any Law or Regulation shall be deemed stricken, and all remaining provisions and parts shall continue to be valid and binding upon Owner and Contractor, who agree that the Contract Documents shall be reformed to replace such stricken provision or part thereof with a valid and enforceable provision or part that comes as close as possible to expressing the intention of the stricken provision.

9.04 *No-Damage-for-Delay*

Contractor shall not be entitled to any damages (including, without limitation, expenses, costs, fees, extended field overhead and general conditions, equipment costs, home office overhead, lost productivity and inefficiency damages, additional payroll and labor costs, etc.) for any delay to its Work. Contractor's sole and exclusive remedy for a delay to its Work that is not caused by Contractor (or a person or entity performing a portion of Contractor's scope of Work) shall be an extension of time to substantially complete and finally complete the Project; provided, however, that Owner granting Contractor an extension of time is not a condition precedent to this no-damage-for-delay provision. Contractor shall also not be entitled to any damages for disruption or interference to its Work or for having to accelerate or incur additional labor or payroll costs in order to make up or overcome a delay to its Work so that it can maintain the dates for Substantial Completion and Final Completion. Contractor agrees that in determining and agreeing to the Contract Price it is considered this no-damage-for-delay provision and understands that it is not entitled to any damages whatsoever for a delay to irs Work.

9.05 *No intended Third-Party Beneficiaries*

There are no intended third-party beneficiaries to the Contract.

Formatted: @EJCDC Art 2 - Par 1.01, Tab stops: 0.75", Left

EJCDC® C-520, Agreement between Owner and Contractor for Construction Contract (Stipulated Price).
Copyright© 2018 National Society of Professional Engineers, American Council of Engineering Companies, and American Society of Civil Engineers. All rights reserved.

IN WITNESS WHEREOF, Owner and Contractor have signed this Agreement.

This Agreement will be effective on _____(which is the Effective Date of the Contract).

~~Owner:~~	Contractor:
_____	_____
~~*(typed or printed name of organization)*~~	*(typed or printed name of organization)*
~~By:~~ _____	By: _____
~~*(individual's signature)*~~	*(individual's signature)*
~~Date:~~ _____	Date: _____
~~*(date signed)*~~	*(date signed)*
~~Name:~~ _____	Name: _____
~~*(typed or printed)*~~	*(typed or printed)*
~~Title:~~ _____	Title: _____
~~*(typed or printed)*~~	*(typed or printed)*
	*(If **[Type of Entity]** is a corporation, a partnership, or a joint venture, attach evidence of authority to sign.)*
~~Attest:~~ _____	Attest: _____
~~*(individual's signature)*~~	*(individual's signature)*
~~Title:~~ _____	Title: _____
~~*(typed or printed)*~~	*(typed or printed)*
~~Address for giving notices:~~	Address for giving notices:
_____	_____
_____	_____
_____	_____
~~Designated Representative:~~	Designated Representative:
~~Name:~~ _____	Name: _____
~~*(typed or printed)*~~	*(typed or printed)*
~~Title:~~ _____	Title: _____
~~*(typed or printed)*~~	*(typed or printed)*
~~Address:~~	Address:
_____	_____
_____	_____
_____	_____
~~Phone:~~ _____	Phone: _____
~~Email:~~ _____	Email: _____
~~*(If **[Type of Entity]** is a corporation, attach evidence of authority to sign. If **[Type of Entity]** is a public body, attach evidence of authority to sign and resolution or other documents authorizing execution of this Agreement.)*~~	License No.: _____ *(where applicable)*
	State: _____

Formatted: Font color: Red, Strikethrough

Formatted: Font color: Red

Formatted: Font color: Red, Strikethrough

Formatted: Font color: Red

Formatted: Font color: Red, Strikethrough

EJCDC® C-520, Agreement between Owner and Contractor for Construction Contract (Stipulated Price).
Copyright© 2018 National Society of Professional Engineers, American Council of Engineering Companies, and American Society of Civil Engineers. All rights reserved.

Owner:

City of Port Orange

(typed or printed name of organization)

By: _____

(individual's signature)

Date: _____

(date signed)

Name: Donald O. Burnette

(typed or printed)

Title: Mayor

(typed or printed)

Attest: Robin L. Fenwick

(individual's signature)

Title: City Clerk

(typed or printed)

Address for giving notices:

1000 City Center Circle

Port Orange, Florida 32129

(386) 506-5500

Designated Representative:

Name: _____

(typed or printed)

Title: _____

(typed or printed)

Address:

1000 City Center Circle

Port Orange, Florida 32129

Phone: (___) -

Email: _____

**EJCDC® C-520, Agreement between Owner and Contractor for Construction Contract (Stipulated Price).
Copyright© 2018 National Society of Professional Engineers, American Council of Engineering Companies, and American Society of Civil Engineers. All rights reserved.**

This document has important legal consequences; consultation with an attorney is encouraged with respect to its use or modification. This document should be adapted to the particular circumstances of the contemplated Project and the controlling Laws and Regulations.

STANDARD GENERAL CONDITIONS OF THE CONSTRUCTION CONTRACT

Prepared By

EJCDC®
ENGINEERS JOINT CONTRACT DOCUMENTS COMMITTEE

ACEC
AMERICAN COUNCIL OF ENGINEERING COMPANIES

ASCE
AMERICAN SOCIETY OF CIVIL ENGINEERS

NSPE
NATIONAL SOCIETY OF PROFESSIONAL ENGINEERS

Endorsed By

CSI
Building Knowledge
Improving Project Delivery

NUCA
We Dig America

EJCDC® C-700, Standard General Conditions of the Construction Contract.
Copyright© 2018 National Society of Professional Engineers, American Council of Engineering Companies, and American Society of Civil Engineers. All rights reserved.

Copyright© 2018

National Society of Professional Engineers

1420 King Street, Alexandria, VA 22314-2794

(703) 684-2882

www.nspe.org

American Council of Engineering Companies

1015 15th Street N.W., Washington, DC 20005

(202) 347-7474

www.acec.org

American Society of Civil Engineers

1801 Alexander Bell Drive, Reston, VA 20191-4400

(800) 548-2723

www.asce.org

The copyright for this EJCDC document is owned jointly by the three sponsoring organizations listed above. The National Society of Professional Engineers is the Copyright Administrator for the EJCDC documents; please direct all inquiries regarding EJCDC copyrights to NSPE.

NOTE: EJCDC publications may be purchased at www.ejcdc.org, or from any of the sponsoring organizations above.

EJCDC® C-700, Standard General Conditions of the Construction Contract.
Copyright© 2018 National Society of Professional Engineers, American Council of Engineering Companies, and American Society of Civil Engineers. All rights reserved.

STANDARD GENERAL CONDITIONS OF THE CONSTRUCTION CONTRACT

TABLE OF CONTENTS

Page

Article 1—Definitions and Terminology 1
1.01 Defined Terms 1
1.02 Terminology 6
Article 2—Preliminary Matters 7
2.01 Delivery of Performance and Payment Bonds; Evidence of Insurance 7
2.02 Copies of Documents ..... 8~~7~~
2.03 Before Starting Construction ..... 8~~7~~
2.04 Preconstruction Conference; Designation of Authorized Representatives 8
2.05 Acceptance of Schedules ..... 9~~8~~
2.06 Electronic Transmittals ..... 9~~8~~
Article 3—Contract Documents: Intent, Requirements, Reuse ..... 10~~9~~
3.01 Intent ..... 10~~9~~
3.02 Reference Standards ..... 10~~9~~
3.03 Reporting and Resolving Discrepancies ..... 11~~10~~
3.04 Requirements of the Contract Documents ..... 12~~10~~
3.05 Reuse of Documents ..... 12~~11~~
Article 4—Commencement and Progress of the Work ..... 12~~11~~
4.01 Commencement of Contract Times; Notice to Proceed ..... 12~~11~~
4.02 Starting the Work ..... 13~~11~~
4.03 Reference Points ..... 13~~11~~
4.04 Progress Schedule ..... 13~~12~~
4.05 Delays in Contractor's Progress ..... 13~~12~~
Article 5—Site; Subsurface and Physical Conditions; Hazardous Environmental Conditions ..... 15~~13~~
5.01 Availability of Lands ..... 15~~13~~
5.02 Use of Site and Other Areas ..... 15~~14~~
5.03 Subsurface and Physical Conditions ..... 16~~15~~
5.04 Differing Subsurface or Physical Conditions ..... 17~~16~~

EJCDC® C-700, Standard General Conditions of the Construction Contract.
Copyright© 2018 National Society of Professional Engineers, American Council of Engineering Companies, and American Society of Civil Engineers. All rights reserved.

5.05 Underground Facilities ..... 19~~17~~
5.06 Hazardous Environmental Conditions at Site ..... 21~~19~~
Article 6—Bonds and Insurance ..... 24~~21~~
6.01 Performance, Payment, and Other Bonds ..... 24~~21~~
6.02 Insurance—General Provisions ..... 25~~22~~
6.03 Contractor's Insurance ..... 26~~24~~
6.04 Builder's Risk and Other Property Insurance ..... 28~~25~~
6.05 Property Losses; Subrogation ..... 28~~25~~
6.06 Receipt and Application of Property Insurance Proceeds ..... 29~~27~~
Article 7—Contractor's Responsibilities ..... 30~~27~~
7.01 Contractor's Means and Methods of Construction ..... 30~~27~~
7.02 Supervision and Superintendence ..... 31~~27~~
7.03 Labor; Working Hours ..... 31~~27~~
7.04 Services, Materials, and Equipment ..... 31~~28~~
7.05 "Or Equals" ..... 32~~28~~
7.06 Substitutes ..... 33~~29~~
7.07 Concerning Subcontractors and Suppliers ..... 34~~31~~
7.08 Patent Fees and Royalties ..... 36~~32~~
7.09 Permits ..... 36~~33~~
7.10 Taxes ..... 37~~33~~
7.11 Laws and Regulations ..... 37~~33~~
7.12 Record Documents ..... 37~~33~~
7.13 Safety and Protection ..... 37~~34~~
7.14 Hazard Communication Programs ..... 39~~35~~
7.15 Emergencies ..... 39~~35~~
7.16 Submittals ..... 39~~35~~
7.17 Contractor's General Warranty and Guarantee ..... 42~~38~~
7.18 Indemnification ..... 43~~39~~
7.19 Delegation of Professional Design Services ..... 44~~39~~
Article 8—Other Work at the Site ..... 45~~40~~
8.01 Other Work ..... 45~~40~~
8.02 Coordination ..... 46~~41~~
8.03 Legal Relationships ..... 46~~41~~

EJCDC® C-700, Standard General Conditions of the Construction Contract.
Copyright© 2018 National Society of Professional Engineers, American Council of Engineering Companies, and American Society of Civil Engineers. All rights reserved.

Article 9—Owner's Responsibilities 4742
9.01 Communications to Contractor 4742
9.02 Replacement of Engineer 4742
9.03 Furnish Data 4742
9.04 Pay When Due 4742
9.05 Lands and Easements; Reports, Tests, and Drawings 4743
9.06 Insurance 4843
9.07 Change Orders 4843
9.08 Inspections, Tests, and Approvals 4843
9.09 Limitations on Owner's Responsibilities 4843
9.10 Undisclosed Hazardous Environmental Condition 4843
9.11 Evidence of Financial Arrangements 4843
9.12 Safety Programs 4843
Article 10—Engineer's Status During Construction 4844
10.01 Owner's Representative 4844
10.02 Visits to Site 4844
10.03 Resident Project Representative 4944
10.04 Engineer's Authority 4944
10.05 Determinations for Unit Price Work 4945
10.06 Decisions on Requirements of Contract Documents and Acceptability of Work 4945
10.07 Limitations on Engineer's Authority and Responsibilities 5045
10.08 Compliance with Safety Program 5045
Article 11—Changes to the Contract 5046
11.01 Amending and Supplementing the Contract 5046
11.02 Change Orders 5146
11.03 Work Change Directives 5146
11.04 Field Orders 5247
11.05 Owner-Authorized Changes in the Work 5247
11.06 Unauthorized Changes in the Work 5247
11.07 Change of Contract Price 5247
11.08 Change of Contract Times 5349
11.09 Change Proposals 5449
11.10 Notification to Surety 5550

Copyright© 2018 National Society of Professional Engineers, American Council of Engineering Companies, and American Society of Civil Engineers. All rights reserved.

Article 12—Claims ..... 55~~50~~
12.01 Claims ..... 55~~50~~
Article 13—Cost of the Work; Allowances; Unit Price Work ..... 57~~51~~
13.01 Cost of the Work ..... 57~~51~~
13.02 Allowances ..... 60~~55~~
13.03 Unit Price Work ..... 61~~55~~
Article 14—Tests and Inspections; Correction, Removal, or Acceptance of Defective Work ..... 62~~56~~
14.01 Access to Work ..... 62~~56~~
14.02 Tests, Inspections, and Approvals ..... 62~~56~~
14.03 Defective Work ..... 63~~57~~
14.04 Acceptance of Defective Work ..... 63~~58~~
14.05 Uncovering Work ..... 64~~58~~
14.06 Owner May Stop the Work ..... 64~~58~~
14.07 Owner May Correct Defective Work ..... 65~~59~~
Article 15—Payments to Contractor; Set-Offs; Completion; Correction Period ..... 65~~59~~
15.01 Progress Payments ..... 65~~59~~
15.02 Contractor's Warranty of Title ..... 69~~62~~
15.03 Substantial Completion ..... 69~~62~~
15.04 Partial Use or Occupancy ..... 70~~63~~
15.05 Final Inspection ..... 70~~64~~
15.06 Final Payment ..... 71~~64~~
15.07 Waiver of Claims ..... 72~~65~~
15.08 Correction Period ..... 72~~66~~
Article 16—Suspension of Work and Termination ..... 73~~67~~
16.01 Owner May Suspend Work ..... 73~~67~~
16.02 Owner May Terminate for Cause ..... 74~~67~~
16.03 Owner May Terminate for Convenience ..... 75~~68~~
16.04 Contractor May Stop Work or Terminate ..... 75~~68~~
Article 17—Final Resolution of Disputes ..... 76~~69~~
17.01 Methods and Procedures ..... 76~~69~~
Article 18—Miscellaneous ..... 77~~69~~
18.01 Giving Notice ..... 77~~69~~
18.02 Computation of Times ..... 77~~69~~

EJCDC® C-700, Standard General Conditions of the Construction Contract.
Copyright© 2018 National Society of Professional Engineers, American Council of Engineering Companies, and American Society of Civil Engineers. All rights reserved.

18.03 Cumulative Remedies 7770
18.04 Limitation of Damages 7770
18.05 No Waiver 7870
18.06 Survival of Obligations 7870
18.07 Controlling Law 7870
18.08 Assignment of Contract 7870
18.09 Successors and Assigns 7870
18.10 Headings 7870

EJCDC® C-700, Standard General Conditions of the Construction Contract.
Copyright© 2018 National Society of Professional Engineers, American Council of Engineering Companies, and American Society of Civil Engineers. All rights reserved.

STANDARD GENERAL CONDITIONS OF THE CONSTRUCTION CONTRACT

ARTICLE 1—DEFINITIONS AND TERMINOLOGY

1.01 *Defined Terms*

A. Wherever used in the Bidding Requirements or Contract Documents, a term printed with initial capital letters, including the term's singular and plural forms, will have the meaning indicated in the definitions below. In addition to terms specifically defined, terms with initial capital letters in the Contract Documents include references to identified articles and paragraphs, and the titles of other documents or forms.

1. *Addenda*—Written or graphic instruments issued prior to the opening of Bids which clarify, correct, or change the Bidding Requirements or the proposed Contract Documents.

2. *Agreement*—The written instrument, executed by Owner and Contractor, that sets forth the Contract Price and Contract Times, identifies the parties and the Engineer, and designates the specific items that are Contract Documents.

3. *Application for Payment*—The document prepared by Contractor, in a form acceptable to Engineer, to request progress or final payments, and which is to be accompanied by such supporting documentation as is required by the Contract Documents.

4. *Bid*—The offer of a Bidder submitted on the prescribed form setting forth the prices for the Work to be performed.

5. *Bidder*—An individual or entity that submits a Bid to Owner.

6. *Bidding Documents*—The Bidding Requirements, the proposed Contract Documents, and all Addenda.

7. *Bidding Requirements*—The Advertisement or invitation to bid, Instructions to Bidders, Bid Bond or other Bid security, if any, the Bid Form, and the Bid with any attachments.

8. *Change Order*—A document which is signed by Contractor and Owner and authorizes an addition, deletion, or revision in the Work or an adjustment in the Contract Price or the Contract Times, or other revision to the Contract, issued on or after the Effective Date of the Contract.

9. *Change Proposal*—A written request by Contractor, duly submitted in compliance with the procedural requirements set forth herein, seeking an adjustment in Contract Price or Contract Times; contesting an initial decision by Engineer concerning the requirements of the Contract Documents or the acceptability of Work under the Contract Documents; challenging a set-off against payments due; or seeking other relief with respect to the terms of the Contract.

EJCDC® C-700, Standard General Conditions of the Construction Contract.
Copyright© 2018 National Society of Professional Engineers, American Council of Engineering Companies, and American Society of Civil Engineers. All rights reserved.

10. *Claim*

    a. A demand or assertion by Owner directly to Contractor, duly submitted in compliance with the procedural requirements set forth herein, seeking an adjustment of Contract Price or Contract Times; contesting an initial decision by Engineer concerning the requirements of the Contract Documents or the acceptability of Work under the Contract Documents; contesting Engineer's decision regarding a Change Proposal; seeking resolution of a contractual issue that Engineer has declined to address; or seeking other relief with respect to the terms of the Contract.

    b. A demand or assertion by Contractor directly to Owner, duly submitted in compliance with the procedural requirements set forth herein, contesting Engineer's decision regarding a Change Proposal, or seeking resolution of a contractual issue that Engineer has declined to address.

    c. A demand or assertion by Owner or Contractor, duly submitted in compliance with the procedural requirements set forth herein, made pursuant to Paragraph 12.01.A.4, concerning disputes arising after Engineer has issued a recommendation of final payment.

    d. A demand for money or services by a third party is not a Claim.

11. *Constituent of Concern*—Asbestos, petroleum, radioactive materials, polychlorinated biphenyls (PCBs), lead-based paint (as defined by the HUD/EPA standard), hazardous waste, and any substance, product, waste, or other material of any nature whatsoever that is or becomes listed, regulated, or addressed pursuant to Laws and Regulations regulating, relating to, or imposing liability or standards of conduct concerning, any hazardous, toxic, or dangerous waste, substance, or material.

12. *Contract*—The entire and integrated written contract between Owner and Contractor concerning the Work.

13. *Contract Documents*—Those items so designated in the Agreement, and which together comprise the Contract.

14. *Contract Price*—The money that Owner has agreed to pay Contractor for completion of the Work in accordance with the Contract Documents.

15. *Contract Times*—The number of days or the dates by which Contractor shall: (a) achieve Milestones, if any; (b) achieve Substantial Completion; and (c) complete the Work.

16. *Contractor*—The individual or entity with which Owner has contracted for performance of the Work.

17. *Cost of the Work*—See Paragraph 13.01 for definition.

18. *Drawings*—The part of the Contract that graphically shows the scope, extent, and character of the Work to be performed by Contractor.

19. *Effective Date of the Contract*—The date, indicated in the Agreement, on which the Contract becomes effective.

EJCDC® C-700, Standard General Conditions of the Construction Contract.
Copyright© 2018 National Society of Professional Engineers, American Council of Engineering Companies, and American Society of Civil Engineers. All rights reserved.

20. *Electronic Document*—Any Project-related correspondence, attachments to correspondence, data, documents, drawings, information, or graphics, including but not limited to Shop Drawings and other Submittals, that are in an electronic or digital format.

21. *Electronic Means*—Electronic mail (email), upload/download from a secure Project website, or other communications methods that allow: (a) the transmission or communication of Electronic Documents; (b) the documentation of transmissions, including sending and receipt; (c) printing of the transmitted Electronic Document by the recipient; (d) the storage and archiving of the Electronic Document by sender and recipient; and (e) the use by recipient of the Electronic Document for purposes permitted by this Contract. Electronic Means does not include the use of text messaging, or of Facebook, Twitter, Instagram, or similar social media services for transmission of Electronic Documents.

22. *Engineer*—The individual or entity named as such in the Agreement.

23. *Field Order*—A written order issued by Engineer which requires minor changes in the Work but does not change the Contract Price or the Contract Times.

24. *Hazardous Environmental Condition*—The presence at the Site of Constituents of Concern in such quantities or circumstances that may present a danger to persons or property exposed thereto.

    a. The presence at the Site of materials that are necessary for the execution of the Work, or that are to be incorporated into the Work, and that are controlled and contained pursuant to industry practices, Laws and Regulations, and the requirements of the Contract, is not a Hazardous Environmental Condition.

    b. The presence of Constituents of Concern that are to be removed or remediated as part of the Work is not a Hazardous Environmental Condition.

    c. The presence of Constituents of Concern as part of the routine, anticipated, and obvious working conditions at the Site, is not a Hazardous Environmental Condition.

25. *Laws and Regulations; Laws or Regulations*—Any and all applicable laws, statutes, rules, regulations, ordinances, codes, and binding decrees, resolutions, and orders of any and all governmental bodies, agencies, authorities, and courts having jurisdiction.

26. *Liens*—Charges, security interests, or encumbrances upon Contract-related funds, real property, or personal property.

27. *Milestone*—A principal event in the performance of the Work that the Contract requires Contractor to achieve by an intermediate completion date, or by a time prior to Substantial Completion of all the Work.

28. *Notice of Award*—The written notice by Owner to a Bidder of Owner's acceptance of the Bid.

29. *Notice to Proceed*—A written notice by Owner to Contractor fixing the date on which the Contract Times will commence to run and on which Contractor shall start to perform the Work.

Copyright© 2018 National Society of Professional Engineers, American Council of Engineering Companies, and American Society of Civil Engineers. All rights reserved.

30. *Owner*—The individual or entity with which Contractor has contracted regarding the Work, and which has agreed to pay Contractor for the performance of the Work, pursuant to the terms of the Contract.

31. *Progress Schedule*—A schedule, prepared and maintained by Contractor, describing the sequence and duration of the activities comprising Contractor's plan to accomplish the Work within the Contract Times.

32. *Project*—The total undertaking to be accomplished for Owner by engineers, contractors, and others, including planning, study, design, construction, testing, commissioning, and start-up, and of which the Work to be performed under the Contract Documents is a part.

33. *Project Manual*—The bound documentary information prepared for bidding and constructing the Work. A listing of the contents of the Project Manual, which may be bound in one or more volumes, is contained in the table(s) of contents.

34. *Punch List* - the detailed list of incomplete, unsatisfactory or unacceptable, or defective items that Contractor is required to complete prior to final payment that is generated in accordance with Paragraph 14.06 of the General Conditions."

343. *Resident Project Representative*—The authorized representative of Engineer assigned to assist Engineer at the Site. As used herein, the term Resident Project Representative (RPR) includes any assistants or field staff of Resident Project Representative.

34. *Samples*—Physical examples of materials, equipment, or workmanship that are representative of some portion of the Work and that establish the standards by which such portion of the Work will be judged.

35. *Schedule of Submittals*—A schedule, prepared and maintained by Contractor, of required submittals and the time requirements for Engineer's review of the submittals.

36. *Schedule of Values*—A schedule, prepared and maintained by Contractor, allocating portions of the Contract Price to various portions of the Work and used as the basis for reviewing Contractor's Applications for Payment.

37. *Shop Drawings*—All drawings, diagrams, illustrations, schedules, and other data or information that are specifically prepared or assembled by or for Contractor and submitted by Contractor to illustrate some portion of the Work. Shop Drawings, whether approved or not, are not Drawings and are not Contract Documents.

38. *Site*—Lands or areas indicated in the Contract Documents as being furnished by Owner upon which the Work is to be performed, including rights-of-way and easements, and such other lands or areas furnished by Owner which are designated for the use of Contractor.

39. *Specifications*—The part of the Contract that consists of written requirements for materials, equipment, systems, standards, and workmanship as applied to the Work, and certain administrative requirements and procedural matters applicable to the Work.

40. *Subcontractor*—An individual or entity having a direct contract with Contractor or with any other Subcontractor for the performance of a part of the Work.

Copyright© 2018 National Society of Professional Engineers, American Council of Engineering Companies, and American Society of Civil Engineers. All rights reserved.

41. *Submittal*—A written or graphic document, prepared by or for Contractor, which the Contract Documents require Contractor to submit to Engineer, or that is indicated as a Submittal in the Schedule of Submittals accepted by Engineer. Submittals may include Shop Drawings and Samples; schedules; product data; Owner-delegated designs; sustainable design information; information on special procedures; testing plans; results of tests and evaluations, source quality-control testing and inspections, and field or Site quality-control testing and inspections; warranties and certifications; Suppliers' instructions and reports; records of delivery of spare parts and tools; operations and maintenance data; Project photographic documentation; record documents; and other such documents required by the Contract Documents. Submittals, whether or not approved or accepted by Engineer, are not Contract Documents. Change Proposals, Change Orders, Claims, notices, Applications for Payment, and requests for interpretation or clarification are not Submittals.

42. *Substantial Completion*—The time and date at which the Work (or a specified part thereof) has progressed to the point where, in the opinion of Engineer, the Work (or a specified part thereof) is sufficiently complete, in accordance with the Contract Documents, so that the Work (or a specified part thereof) can be ~~occupied and/or~~ utilized for the purposes for which it is intended. The terms "substantially complete" and "substantially completed" as applied to all or part of the Work refer to Substantial Completion of such Work. ~~Substantial Completion cannot occur before the Project is issued a Certificate of Occupancy (or Completion, if applicable) by the governing building department that allows Owner to begin to utilize the entire Project for the purposes for which it was intended.~~

43. *Successful Bidder*—The Bidder to which the Owner makes an award of contract.

44. *Supplementary Conditions*—The part of the Contract that amends or supplements these General Conditions.

45. *Supplier*—A manufacturer, fabricator, supplier, distributor, or vendor having a direct contract with Contractor or with any Subcontractor to furnish materials or equipment to be incorporated in the Work by Contractor or a Subcontractor.

46. *Technical Data*

    a. Those items expressly identified as Technical Data in the Supplementary Conditions, with respect to either (1) existing subsurface conditions at or adjacent to the Site, or existing physical conditions at or adjacent to the Site including existing surface or subsurface structures (except Underground Facilities) or (2) Hazardous Environmental Conditions at the Site.

    b. If no such express identifications of Technical Data have been made with respect to conditions at the Site, then Technical Data is defined, with respect to conditions at the Site under Paragraphs 5.03, 5.04, and 5.06, as the data contained in boring logs, recorded measurements of subsurface water levels, assessments of the condition of subsurface facilities, laboratory test results, and other factual, objective information regarding conditions at the Site that are set forth in any geotechnical, environmental, or other Site or facilities conditions report prepared for the Project and made available to Contractor.

EJCDC® C-700, Standard General Conditions of the Construction Contract.
Copyright© 2018 National Society of Professional Engineers, American Council of Engineering Companies, and American Society of Civil Engineers. All rights reserved.

c. Information and data regarding the presence or location of Underground Facilities are not intended to be categorized, identified, or defined as Technical Data, and instead Underground Facilities are shown or indicated on the Drawings.

47. *Underground Facilities*—All active or not-in-service underground lines, pipelines, conduits, ducts, encasements, cables, wires, manholes, vaults, tanks, tunnels, or other such facilities or systems at the Site, including but not limited to those facilities or systems that produce, transmit, distribute, or convey telephone or other communications, cable television, fiber optic transmissions, power, electricity, light, heat, gases, oil, crude oil products, liquid petroleum products, water, steam, waste, wastewater, storm water, other liquids or chemicals, or traffic or other control systems. An abandoned facility or system is not an Underground Facility.

48. *Unit Price Work*—Work to be paid for on the basis of unit prices.

49. *Work*—The entire construction or the various separately identifiable parts thereof required to be provided under the Contract Documents. Work includes and is the result of performing or providing all labor, services, and documentation necessary to produce such construction; furnishing, installing, and incorporating all materials and equipment into such construction; and may include related services such as testing, start-up, and commissioning, all as required by the Contract Documents.

50. Emergency *Work Change Directive*—A written directive to Contractor issued on or after the Effective Date of the Contract, signed by Owner and recommended by Engineer, ordering an addition, deletion, or revision in the Work due to an emergency that prevents the parties from using the Change Order process.

1.02 *Terminology*

A. The words and terms discussed in Paragraphs 1.02.B, C, D, and E are not defined terms that require initial capital letters, but, when used in the Bidding Requirements or Contract Documents, have the indicated meaning.

B. *Intent of Certain Terms or Adjectives*: The Contract Documents include the terms "as allowed," "as approved," "as ordered," "as directed" or terms of like effect or import to authorize an exercise of professional judgment by Engineer. In addition, the adjectives "reasonable," "suitable," "acceptable," "proper," "satisfactory," or adjectives of like effect or import are used to describe an action or determination of Engineer as to the Work. It is intended that such exercise of professional judgment, action, or determination will be solely to evaluate, in general, the Work for compliance with the information in the Contract Documents and with the design concept of the Project as a functioning whole as shown or indicated in the Contract Documents (unless there is a specific statement indicating otherwise). The use of any such term or adjective is not intended to and shall not be effective to assign to Engineer any duty or authority to supervise or direct the performance of the Work, or any duty or authority to undertake responsibility contrary to the provisions of Article 10 or any other provision of the Contract Documents.

C. *Day*: The word "day" means a calendar day of 24 hours measured from midnight to the next midnight, including weekends and legal holidays unless otherwise specifically defined.

Copyright© 2018 National Society of Professional Engineers, American Council of Engineering Companies, and American Society of Civil Engineers. All rights reserved.

D. *Defective*: The word "defective," when modifying the word "Work," refers to Work that is unsatisfactory, faulty, or deficient in that it:

1. does not conform to the Contract Documents;

2. does not meet the requirements of any applicable inspection, reference standard, test, or approval referred to in the Contract Documents; or

3. has been damaged prior to Engineer's recommendation of final payment (unless responsibility for the protection thereof has been assumed by Owner at Substantial Completion in accordance with Paragraph 15.03 or Paragraph 15.04).

E. *Furnish, Install, Perform, Provide*

1. The word "furnish," when used in connection with services, materials, or equipment, means to supply and deliver said services, materials, or equipment to the Site (or some other specified location) ready for use or installation and in usable or operable condition.

2. The word "install," when used in connection with services, materials, or equipment, means to put into use or place in final position said services, materials, or equipment complete and ready for intended use.

3. The words "perform" or "provide," when used in connection with services, materials, or equipment, means to furnish and install said services, materials, or equipment complete and ready for intended use.

4. If the Contract Documents establish an obligation of Contractor with respect to specific services, materials, or equipment, but do not expressly use any of the four words "furnish," "install," "perform," or "provide," then Contractor shall furnish and install said services, materials, or equipment complete and ready for intended use.

F. *Contract Price or Contract Times*: References to a change in "Contract Price or Contract Times" or "Contract Times or Contract Price" or similar, indicate that such change applies to (1) Contract Price, (2) Contract Times, or (3) both Contract Price and Contract Times, as warranted, even if the term "or both" is not expressed.

G. Unless stated otherwise in the Contract Documents, words or phrases that have a well-known technical or construction industry or trade meaning are used in the Contract Documents in accordance with such recognized meaning.

ARTICLE 2—PRELIMINARY MATTERS

2.01 *Delivery of Performance and Payment Bonds; Evidence of Insurance*

A. *Performance and Payment Bonds*: When Contractor delivers the signed counterparts of the Agreement to Owner, Contractor shall also deliver to Owner the performance bond and payment bond (if the Contract requires Contractor to furnish such bonds).

B. *Evidence of Contractor's Insurance*: When Contractor delivers the signed counterparts of the Agreement to Owner, Contractor shall also deliver to Owner, with copies to each additional insured (as identified in the Contract), the certificates, endorsements, and other evidence of insurance required to be provided by Contractor in accordance with Article 6, except to the

Copyright© 2018 National Society of Professional Engineers, American Council of Engineering Companies, and American Society of Civil Engineers. All rights reserved.

extent the Supplementary Conditions expressly establish other dates for delivery of specific insurance policies.

C. ~~*Evidence of Owner's Insurance*: After receipt of the signed counterparts of the Agreement and all required bonds and insurance documentation, Owner shall promptly deliver to Contractor, with copies to each additional insured (as identified in the Contract), the certificates and other evidence of insurance required to be provided by Owner under Article 6.~~

2.02 *Copies of Documents*

A. Owner shall furnish to Contractor four printed copies of the Contract (including one fully signed counterpart of the Agreement), and one copy in electronic portable document format (PDF). Additional printed copies will be furnished upon request at the cost of reproduction.

B. Owner shall maintain and safeguard at least one original printed record version of the Contract, including Drawings and Specifications signed and sealed by Engineer and other design professionals. Owner shall make such original printed record version of the Contract available to Contractor for review. Owner may delegate the responsibilities under this provision to Engineer.

2.03 *Before Starting Construction*

A. *Preliminary Schedules*: Within 10 days after the Effective Date of the Contract (or as otherwise required by the Contract Documents), Contractor shall submit to Engineer for timely review:

1. a preliminary Progress Schedule indicating the times (numbers of days or dates) for starting and completing the various stages of the Work, including any Milestones specified in the Contract, and identifying the Substantial Completion ~~and Final Completion~~ dates~~s~~;

2. a preliminary Schedule of Submittals; and

3. a preliminary Schedule of Values for all of the Work which includes quantities and prices of items which when added together equal the Contract Price and subdivides the Work into component parts in sufficient detail to serve as the basis for progress payments during performance of the Work. Such prices will include an appropriate amount of overhead and profit applicable to each item of Work.

2.04 *Preconstruction Conference; Designation of Authorized Representatives*

A. Before any Work at the Site is started, a conference attended by Owner, Contractor, Engineer, and others as appropriate will be held to establish a working understanding among the parties as to the Work, and to discuss the schedules referred to in Paragraph 2.03.A, procedures for handling Shop Drawings, Samples, and other Submittals, processing Applications for Payment, electronic or digital transmittals, and maintaining required records.

B. At this conference Owner and Contractor each shall designate, in writing, a specific individual to act as its authorized representative with respect to the services and responsibilities under the Contract. Such individuals shall have the authority to transmit and receive information, render decisions relative to the Contract, and otherwise act on behalf of each respective party.

Copyright© 2018 National Society of Professional Engineers, American Council of Engineering Companies, and American Society of Civil Engineers. All rights reserved.

2.05 *Acceptance of Schedules*

A. At least 10 days before submission of the first Application for Payment a conference, attended by Contractor, Engineer, ~~or~~ Owner and others as appropriate, will be held to review the schedules submitted in accordance with Paragraph 2.03.A. No progress payment will be made to Contractor until acceptable schedules are submitted to and approved by Engineer and Owner.

1. The Progress Schedule will be acceptable to Engineer and Owner if it provides an orderly progression of the Work to completion within the Contract Times and identifies Contractor's critical path sequence of scheduled activities with the earliest start dates for scheduled activities, the earliest finish date for scheduled activities, the latest start date for scheduled activities and latest finish date for scheduled activities. All float in the Progress Schedule shall belong to Owner in order to offset a ~~dlay~~delay attributable to Owner or its agents. Such acceptance will not impose on Engineer or Owner responsibility for the Progress Schedule, for sequencing, scheduling, or progress of the Work, nor interfere with or relieve Contractor from Contractor's full responsibility therefor.

2. Contractor's Schedule of Submittals will be acceptable to Engineer and Owner if it provides a workable arrangement for reviewing and processing the required submittals.

3. Contractor's Schedule of Values will be acceptable to Engineer and Owner as to form and substance if it provides a reasonable allocation of the Contract Price to the component parts of the Work.

4. If a schedule is not acceptable, Contractor will have an additional 10 days to revise and resubmit the schedule.

5. If Contractor submits a schedule indicating an intention to achieve completion of the Wok prior to contractually required dates, including milestones, no liability of the Owner to the Contractor for any failure of the Contractor to complete early shall be created, whether or not the Owner approves such schedule.

6. The Contractor acknowledges ~~thtt~~that the Owner may retain the services of a scheduling consultant at the Owner's expense. The Contractor shall cooperate with any such scheduling consultant at the Owner's direction, including without limitation, with regard to the preparation of the Project schedule.

2.06 *Electronic Transmittals*

A. Except as otherwise stated elsewhere in the Contract, the Owner, Engineer, and Contractor may send, and shall accept, Electronic Documents transmitted by Electronic Means.

B. If the Contract does not establish protocols for Electronic Means, then Owner, Engineer, and Contractor shall jointly develop such protocols.

C. Subject to any governing protocols for Electronic Means, when transmitting Electronic Documents by Electronic Means, the transmitting party makes no representations as to long-term compatibility, usability, or readability of the Electronic Documents resulting from the recipient's use of software application packages, operating systems, or computer hardware differing from those used in the drafting or transmittal of the Electronic Documents.

Copyright© 2018 National Society of Professional Engineers, American Council of Engineering Companies, and American Society of Civil Engineers. All rights reserved.

ARTICLE 3—CONTRACT DOCUMENTS: INTENT, REQUIREMENTS, REUSE

3.01 *Intent*

A. The Contract Documents are complementary; what is required by one Contract Document is as binding as if required by all.

B. It is the intent of the Contract Documents to describe a functionally complete Project (or part thereof) to be constructed in accordance with the Contract Documents.

C. Unless otherwise stated in the Contract Documents, if there is a discrepancy between the electronic versions of the Contract Documents (including any printed copies derived from such electronic versions) and the printed record version, the printed record version will govern.

D. The Contract supersedes prior negotiations, representations, and agreements, whether written or oral.

E. Engineer will issue clarifications and interpretations of the Contract Documents as provided herein.

F. Any provision or part of the Contract Documents held to be void or unenforceable under any Law or Regulation will be deemed stricken, and all remaining provisions will continue to be valid and binding upon Owner and Contractor, which agree that the Contract Documents will be reformed to replace such stricken provision or part thereof with a valid and enforceable provision that comes as close as possible to expressing the intention of the stricken provision.

G. Nothing in the Contract Documents creates:

1. any contractual relationship between Owner or Engineer and any Subcontractor, Supplier, or other individual or entity performing or furnishing any of the Work, for the benefit of such Subcontractor, Supplier, or other individual or entity; or

2. any obligation on the part of Owner or Engineer to pay or to see to the payment of any money due any such Subcontractor, Supplier, or other individual or entity, except as may otherwise be required by Laws and Regulations.

3.02 *Reference Standards*

A. *Standards Specifications, Codes, Laws and Regulations*

1. Reference in the Contract Documents to standard specifications, manuals, reference standards, or codes of any technical society, organization, or association, or to Laws or Regulations, whether such reference be specific or by implication, means the standard specification, manual, reference standard, code, or Laws or Regulations in effect at the time of opening of Bids (or on the Effective Date of the Contract if there were no Bids), except as may be otherwise specifically stated in the Contract Documents.

2. No provision of any such standard specification, manual, reference standard, or code, and no instruction of a Supplier, will be effective to change the duties or responsibilities of Owner, Contractor, or Engineer from those set forth in the part of the Contract Documents prepared by or for Engineer. No such provision or instruction shall be effective to assign to Owner or Engineer any duty or authority to supervise or direct the

Copyright© 2018 National Society of Professional Engineers, American Council of Engineering Companies, and American Society of Civil Engineers. All rights reserved.

performance of the Work, or any duty or authority to undertake responsibility inconsistent with the provisions of the part of the Contract Documents prepared by or for Engineer.

3.03 *Reporting and Resolving Discrepancies*

A. *Reporting Discrepancies*

1. *Contractor's Verification of Figures and Field Measurements*: Before undertaking each part of the Work, Contractor shall carefully study the Contract Documents, and check and verify pertinent figures and dimensions therein, particularly with respect to applicable field measurements. Contractor shall promptly report in writing to Engineer any conflict, error, ambiguity, or discrepancy that Contractor discovers, or has actual knowledge of, and shall not proceed with any Work affected thereby until the conflict, error, ambiguity, or discrepancy is resolved by a clarification or interpretation by Engineer, or by an amendment or supplement to the Contract issued pursuant to Paragraph 11.01.

2. *Contractor's Review of Contract Documents*: If, before or during the performance of the Work, Contractor discovers any conflict, error, ambiguity, or discrepancy within the Contract Documents, or between the Contract Documents and (a) any applicable Law or Regulation, (b) actual field conditions, (c) any standard specification, manual, reference standard, or code, or (d) any instruction of any Supplier, then Contractor shall promptly report it to Engineer in writing. Contractor shall not proceed with the Work affected thereby (except in an emergency as required by Paragraph 7.15) until the conflict, error, ambiguity, or discrepancy is resolved, by a clarification or interpretation by Engineer, or by an amendment or supplement to the Contract issued pursuant to Paragraph 11.01.

3. Contractor shall not be liable to Owner or Engineer for failure to report any conflict, error, ambiguity, or discrepancy in the Contract Documents unless Contractor had actual knowledge thereof or could have discovered the conflict or error by ~~carefully studying and comparing~~careful review of the Contract Documents ~~and checking and verifying~~including pertinent figures ~~therein~~ and ~~all~~ applicable field measurements and dimensions therein..

B. *Resolving Discrepancies*

1. Except as may be otherwise specifically stated in the Contract Documents, the provisions of the part of the Contract Documents prepared by or for Engineer take precedence in resolving any conflict, error, ambiguity, or discrepancy between such provisions of the Contract Documents and:

a. the provisions of any standard specification, manual, reference standard, or code, or the instruction of any Supplier (whether or not specifically incorporated by reference as a Contract Document); or

b. the provisions of any Laws or Regulations applicable to the performance of the Work (unless such an interpretation of the provisions of the Contract Documents would result in violation of such Law or Regulation).

c. In the event there is a discrepancy or conflict in the Drawings and Specifications applicable to a particular detail or assembly of the Work, Contractor must promptly seek clarification from Engineer before proceeding with the Work. Subject to Paragraph 3.03.A.3. above, if Contractor proceeds with the Work without seeking such clarification, Contractor will be

Copyright© 2018 National Society of Professional Engineers, American Council of Engineering Companies, and American Society of Civil Engineers. All rights reserved.

bound by the stricter and more expensive detail or assembly. Contractor agrees and recognizes that in agreeing to the Contract Price it has factored in the costs associated with installing the stricter and more expensive detail or assembly.

3.04 *Requirements of the Contract Documents*

A. During the performance of the Work and until final payment, Contractor and Owner shall submit to the Engineer in writing all matters in question concerning the requirements of the Contract Documents (sometimes referred to as requests for information or interpretation—RFIs), or relating to the acceptability of the Work under the Contract Documents, as soon as possible after such matters arise. Engineer will be the initial interpreter of the requirements of the Contract Documents, and judge of the acceptability of the Work.

B. Engineer will, with reasonable promptness, render a written clarification, interpretation, or decision on the issue submitted, or initiate an amendment or supplement to the Contract Documents. Engineer's written clarification, interpretation, or decision will be final and binding on Contractor, unless it appeals by submitting a Change Proposal, and on Owner, unless it appeals by filing a Claim.

C. If a submitted matter in question concerns terms and conditions of the Contract Documents that do not involve (1) the performance or acceptability of the Work under the Contract Documents, (2) the design (as set forth in the Drawings, Specifications, or otherwise), or (3) other engineering or technical matters, then Engineer will promptly notify Owner and Contractor in writing that Engineer is unable to provide a decision or interpretation. If Owner and Contractor are unable to agree on resolution of such a matter in question, either party may pursue resolution as provided in Article 12.

3.05 *Reuse of Documents*

A. Contractor and its Subcontractors and Suppliers shall not:

1. have or acquire any title to or ownership rights in any of the Drawings, Specifications, or other documents (or copies of any thereof) prepared by or bearing the seal of Engineer or its consultants, including electronic media versions, or reuse any such Drawings, Specifications, other documents, or copies thereof on extensions of the Project or any other project without written consent of Owner and Engineer and specific written verification or adaptation by Engineer; or

2. have or acquire any title or ownership rights in any other Contract Documents, reuse any such Contract Documents for any purpose without Owner's express written consent, or violate any copyrights pertaining to such Contract Documents.

B. The prohibitions of this Paragraph 3.05 will survive final payment, or termination of the Contract. Nothing herein precludes Contractor from retaining copies of the Contract Documents for record purposes.

ARTICLE 4—COMMENCEMENT AND PROGRESS OF THE WORK

4.01 *Commencement of Contract Times; Notice to Proceed ~~(Old 2.03)~~*

A. The Contract Times ~~will~~shall not commence to run and Contractor shall not commence ~~on the 30th day after the Effective Date of the Contract or, if~~the Work until Owner issues a Notice to

Copyright© 2018 National Society of Professional Engineers, American Council of Engineering Companies, and American Society of Civil Engineers. All rights reserved.

Proceed ~~is given, on the day indicated in the Notice to Proceed~~. A Notice to Proceed may be ~~given~~issued by Owner at any time ~~within 30 days~~ after the Effective Date of the Contract. ~~In no event will the Contract Times commence to run later than the 60th day after the day of Bid opening or the 30th day after the Effective Date of the Contract, whichever date is earlier.~~

4.02 *Starting the Work*

A. Contractor shall start to perform the Work on the date ~~when~~ specified in the Notice to Proceed which shall cause the Contract Times to commence to run. No Work may be done at the Site prior to such date.

4.03 *Reference Points*

A. Owner shall provide engineering surveys to establish reference points for construction which in Engineer's judgment are necessary to enable Contractor to proceed with the Work. Contractor shall be responsible for laying out the Work, shall protect and preserve the established reference points and property monuments, and shall make no changes or relocations without the prior written approval of Owner. Contractor shall report to Engineer whenever any reference point or property monument is lost or destroyed or requires relocation because of necessary changes in grades or locations, and shall be responsible for the accurate replacement or relocation of such reference points or property monuments by professionally qualified personnel.

B. Contractor shall lay-out and verify all field dimensions and measurements at the Site before proceeding with any portion of the Work.

4.04 *Progress Schedule*

A. Contractor shall adhere to the Progress Schedule established in accordance with Paragraph 2.05 as it may be adjusted from time to time as provided below.

1. Contractor shall submit to Engineer for acceptance (to the extent indicated in Paragraph 2.05) proposed adjustments in the Progress Schedule that will not result in changing the Contract Times.

2. Proposed adjustments in the Progress Schedule that will change the Contract Times must be submitted in accordance with the requirements of Article 11.

B. Contractor shall carry on the Work and adhere to the Progress Schedule during all disputes or disagreements with Owner. No Work will be delayed or postponed pending resolution of any disputes or disagreements, or during any appeal process, except as permitted by Paragraph 16.04, or as Owner and Contractor may otherwise agree in writing.

4.05 *Delays in Contractor's Progress*

A. If Owner, Engineer, or anyone for whom Owner is responsible, delays, disrupts, or interferes with the performance or progress of the Work, then Contractor shall only be entitled to an equitable adjustment in ~~Contract Price or~~ Contract Times.

B. Contractor shall not be entitled to an adjustment in Contract Price or Contract Times for delay, disruption, or interference caused by or within the control of Contractor. Delay, disruption,

Copyright© 2018 National Society of Professional Engineers, American Council of Engineering Companies, and American Society of Civil Engineers. All rights reserved.

and interference attributable to and within the control of a Subcontractor or Supplier shall be deemed to be within the control of Contractor.

C. If Contractor's performance or progress is delayed, disrupted, or interfered with by unanticipated causes not the fault of and beyond the control of Owner, Contractor, and those for which they are responsible, then Contractor shall be entitled to an equitable adjustment in Contract Times. Such an adjustment will be Contractor's sole and exclusive remedy for the delays, disruption, and interference described in this paragraph. Unanticipated ~~C~~causes of delay, disruption, or interference that may give rise to an adjustment in Contract Times under this paragraph include but are not limited to the following:

1. Severe and unavoidable natural catastrophes such as fires, floods, epidemics, and earthquakes;
2. Abnormal weather conditions not anticipated or customary in Volusia County;
3. Acts or failures to act of third-party utility owners or other third-party entities (other than those third-party utility owners or other third-party entities performing other work at or adjacent to the Site as arranged by or under contract with Owner, as contemplated in Article 8); and
4. Acts of war or terrorism.

D. Contractor's entitlement to an adjustment of Contract Times ~~or Contract Price~~ is limited as follows:

1. Contractor's entitlement to an adjustment of the Contract Times is conditioned on the delay, disruption, or interference adversely affecting an activity on the critical path to completion of the Work, as of the time of the delay, disruption, or interference.
2. ~~Contractor shall not be entitled to an adjustment in Contract Price for any delay, disruption, or interference if such delay is concurrent with a delay, disruption, or interference caused by or within the control of Contractor. Such a concurrent delay by Contractor shall not preclude an adjustment of Contract Times to which Contractor is otherwise entitled.~~
3. Adjustments of Contract Times ~~or Contract Price~~ are subject to the provisions of Article 11.

E. Each Contractor request or Change Proposal seeking an increase in Contract Times ~~or Contract Price~~ must be supplemented by supporting data that sets forth in detail the following:

1. The circumstances that form the basis for the requested adjustment;
2. The date upon which each cause of delay, disruption, or interference began to affect the progress of the Work;
3. The date upon which each cause of delay, disruption, or interference ceased to affect the progress of the Work;
4. The number of days' increase in Contract Times claimed as a consequence of each such cause of delay, disruption, or interference; and
5. ~~The impact on Contract Price, in accordance with the provisions of Paragraph 11.07.~~

Copyright© 2018 National Society of Professional Engineers, American Council of Engineering Companies, and American Society of Civil Engineers. All rights reserved.

Contractor shall also furnish such additional supporting documentation as Owner or Engineer may require including, where appropriate, a revised progress schedule indicating all the activities affected by the delay, disruption, or interference, and an explanation of the effect of the delay, disruption, or interference on the critical path to completion of the Work.

F. Delays, disruption, and interference to the performance or progress of the Work resulting from the existence of a differing subsurface or physical condition, an Underground Facility that was not shown or indicated by the Contract Documents, or not shown or indicated with reasonable accuracy, and those resulting from Hazardous Environmental Conditions, are governed by Article 5, together with the provisions of Paragraphs 4.05.D and 4.05.E.

G. Paragraph 8.03 addresses delays, disruption, and interference to the performance or progress of the Work resulting from the performance of certain other work at or adjacent to the Site.

ARTICLE 5—SITE; SUBSURFACE AND PHYSICAL CONDITIONS; HAZARDOUS ENVIRONMENTAL CONDITIONS

5.01 *Availability of Lands* ~~*(Old 4.01)*~~

A. Owner shall furnish the Site. Owner shall notify Contractor in writing of any encumbrances or restrictions not of general application but specifically related to use of the Site with which Contractor must comply in performing the Work.

B. ~~Upon reasonable written request, Owner shall furnish Contractor with a current statement of record legal title and legal description of the lands upon which permanent improvements are to be made and Owner's interest therein as necessary for giving notice of or filing a mechanic's or construction lien against such lands in accordance with applicable Laws and Regulations.~~

C. Contractor shall provide for all additional lands and access thereto that may be required for temporary construction facilities, staging, or storage of materials and equipment. Contractor shall have the obligation to restore the additional lands to their original condition.

5.02 *Use of Site and Other Areas* ~~*(Old 6.11)*~~

A. *Limitation on Use of Site and Other Areas*

1. Contractor shall confine construction equipment, temporary construction facilities, the storage of materials and equipment, and the operations of workers to the Site, adjacent areas that Contractor has arranged to use through construction easements or otherwise, and other adjacent areas permitted by Laws and Regulations, and shall not unreasonably encumber the Site and such other adjacent areas with construction equipment or other materials or equipment. Contractor shall assume full responsibility for (a) damage to the Site; (b) damage to any such other adjacent areas used for Contractor's operations; (c) damage to any other adjacent land or areas, or to improvements, structures, utilities, or similar facilities located at such adjacent lands or areas; and (d) for injuries and losses sustained by the owners or occupants of any such land or areas; provided that such damage or injuries result from the performance of the Work or from other actions or conduct of the Contractor or those for which Contractor is responsible.

2. If a damage or injury claim is made by the owner or occupant of any such land or area because of the performance of the Work, or because of other actions or conduct of the

Copyright© 2018 National Society of Professional Engineers, American Council of Engineering Companies, and American Society of Civil Engineers. All rights reserved.

Contractor or those for which Contractor is responsible, Contractor shall (a) take immediate corrective or remedial action as required by Paragraph 7.13, or otherwise; (b) promptly attempt to settle the claim as to all parties through negotiations with such owner or occupant, or otherwise resolve the claim by arbitration or other dispute resolution proceeding, or in a court of competent jurisdiction; and (c) to the fullest extent permitted by Laws and Regulations, indemnify and hold harmless Owner and Engineer, and the officers, directors, members, partners, employees, agents, consultants and subcontractors of each and any of them, from and against any such claim, and against all costs, losses, and damages (including but not limited to all fees and charges of engineers, architects, attorneys, and other professionals and all court or arbitration or other dispute resolution costs) arising out of or relating to any claim or action, legal or equitable, brought by any such owner or occupant against Owner, Engineer, or any other party indemnified hereunder to the extent caused directly or indirectly, in whole or in part by, or based upon, Contractor's performance of the Work, or because of other actions or conduct of the Contractor or those for which Contractor is responsible.

B. *Removal of Debris During Performance of the Work*: During the progress of the Work the Contractor shall keep the Site and other adjacent areas free from accumulations of waste materials, rubbish, and other debris. The Contractor shall prevent paint, mortar, and concrete splatter on concrete sidewalks and stairwell ~~tower~~ ~~floors~~pads. Any such splatter shall be immediately removed so no evidence of splatter remains. All construction debris shall be removed in a timely manner. Surrounding graded and grassed areas shall be regularly magnetically scanned to collect miscellaneous nails and other sharp objects~~.~~; the Contractor shall remove such objects from the construction site. Removal and disposal of such waste materials, rubbish, and other debris will conform to applicable Laws and Regulations.

C. *Cleaning*: Prior to Substantial Completion of the Work Contractor shall clean the Site and the Work and make it ready for utilization by Owner. Concrete and ceramic surfaces shall be cleaned and washed. Woodwork and resilient flooring shall be dusted and cleaned. Sash, fixtures and equipment shall be thoroughly cleaned. Stains, spots, dust. marks and smears shall be removed from all surfaces. Hardware and metal surfaces shall be cleaned and polished. Glass and plastic surfaces shall be thoroughly cleaned by professional window cleaners. All damaged, broken or scratched glass or plastic shall be replaced by the Contractor at the Contractor's expense. At the completion of the Work Contractor shall remove from the Site and adjacent areas all tools, appliances, construction equipment and machinery, and surplus materials and shall restore to original condition all property not designated for alteration by the Contract Documents.

D. *Loading of Structures*: Contractor shall not load nor permit any part of any structure to be loaded in any manner that will endanger the structure, nor shall Contractor subject any part of the Work or adjacent structures or land to stresses or pressures that will endanger them.

5.03 *Subsurface and Physical Conditions*

A. *Reports and Drawings*: The Supplementary Conditions identify:

1. Those reports of explorations and tests of subsurface conditions at or adjacent to the Site that contain Technical Data;

EJCDC® C-700, Standard General Conditions of the Construction Contract.
Copyright© 2018 National Society of Professional Engineers, American Council of Engineering Companies, and American Society of Civil Engineers. All rights reserved.

2. Those drawings of existing physical conditions at or adjacent to the Site, including those drawings depicting existing surface or subsurface structures at or adjacent to the Site (except Underground Facilities), that contain Technical Data; and

3. Technical Data contained in such reports and drawings.

B. *Underground Facilities*: Underground Facilities are shown or indicated on the Drawings, pursuant to Paragraph 5.05, and not in the drawings referred to in Paragraph 5.03.A. Information and data regarding the presence or location of Underground Facilities are not intended to be categorized, identified, or defined as Technical Data.

C. *Reliance by Contractor on Technical Data*: Contractor may rely upon the accuracy of the Technical Data expressly identified in the Supplementary Conditions with respect to such reports and drawings, but such reports and drawings are not Contract Documents and shall under no circumstances relieve Contractor from visiting the Site and becoming familiar with and satisfied as to the general, local, and Site conditions that may affect cost, progress, and performance of the Work. If no such express identification has been made, then Contractor may rely upon the accuracy of the Technical Data as defined in Paragraph 1.01.A.46.b.

D. *Limitations of Other Data and Documents*: Except for such reliance on Technical Data, Contractor may not rely upon or make any claim against Owner or Engineer, or any of their officers, directors, members, partners, employees, agents, consultants, or subcontractors, with respect to:

1. the completeness of such reports and drawings for Contractor's purposes, including, but not limited to, any aspects of the means, methods, techniques, sequences, and procedures of construction to be employed by Contractor, and safety precautions and programs incident thereto;

2. other data, interpretations, opinions, and information contained in such reports or shown or indicated in such drawings;

3. the contents of other Site-related documents made available to Contractor, such as record drawings from other projects at or adjacent to the Site, or Owner's archival documents concerning the Site; or

4. any Contractor interpretation of or conclusion drawn from any Technical Data or any such other data, interpretations, opinions, or information.

5.04 *Differing Subsurface or Physical Conditions*

A. *Notice by Contractor*: If Contractor believes that any subsurface or physical condition that is uncovered or revealed at the Site:

1. is of such a nature as to establish that any Technical Data on which Contractor is entitled to rely as provided in Paragraph 5.03 is materially inaccurate;

2. is of such a nature as to require a change in the Drawings or Specifications;

3. differs materially from that shown or indicated in the Contract Documents; or

Copyright© 2018 National Society of Professional Engineers, American Council of Engineering Companies, and American Society of Civil Engineers. All rights reserved.

4. is of an unusual nature, and differs materially from conditions ordinarily encountered and generally recognized as inherent in work of the character provided for in the Contract Documents;

then Contractor shall, promptly after first becoming aware thereof and before further disturbing the subsurface or physical conditions or performing any Work in connection therewith (except in an emergency as required by Paragraph 7.15), notify Owner and Engineer in writing about such condition within 5 days. Contractor shall not further disturb such condition or perform any Work in connection therewith (except with respect to an emergency) until receipt of a written statement permitting Contractor to do so.

B. *Engineer's Review*: After receipt of written notice as required by the preceding paragraph, Engineer will promptly review the subsurface or physical condition in question; determine whether it is necessary for Owner to obtain additional exploration or tests with respect to the condition; conclude whether the condition falls within any one or more of the differing site condition categories in Paragraph 5.04.A; obtain any pertinent cost or schedule information from Contractor; prepare recommendations to Owner regarding the Contractor's resumption of Work in connection with the subsurface or physical condition in question and the need for any change in the Drawings or Specifications; and advise Owner in writing of Engineer's findings, conclusions, and recommendations.

C. *Owner's Statement to Contractor Regarding Site Condition*: After receipt of Engineer's written findings, conclusions, and recommendations, Owner shall issue a written statement to Contractor (with a copy to Engineer) regarding the subsurface or physical condition in question, addressing the resumption of Work in connection with such condition, indicating whether any change in the Drawings or Specifications will be made, and adopting or rejecting Engineer's written findings, conclusions, and recommendations, in whole or in part.

D. *Early Resumption of Work*: If at any time Engineer determines that Work in connection with the subsurface or physical condition in question may resume prior to completion of Engineer's review or Owner's issuance of its statement to Contractor, because the condition in question has been adequately documented, and analyzed on a preliminary basis, then the Engineer may at its discretion instruct Contractor to resume such Work.

E. *Possible Price and Times Adjustments*

1. Contractor shall be entitled to an equitable adjustment in Contract Price or Contract Times, to the extent that the existence of a differing subsurface or physical condition, or any related delay, disruption, or interference, causes an increase or decrease in Contractor's cost of, or time required for, performance of the Work; subject, however, to the following:

   a. Such condition must fall within any one or more of the categories described in Paragraph 5.04.A;

   b. With respect to Work that is paid for on a unit price basis, any adjustment in Contract Price will be subject to the provisions of Paragraph 13.03; and,

   c. Contractor's entitlement to an adjustment of the Contract Times is subject to the provisions of Paragraphs 4.05.D and 4.05.E.

Copyright© 2018 National Society of Professional Engineers, American Council of Engineering Companies, and American Society of Civil Engineers. All rights reserved.

2. Contractor shall not be entitled to any adjustment in the Contract Price or Contract Times with respect to a subsurface or physical condition if:

    a. Contractor knew of the existence of such condition at the time Contractor made a commitment to Owner with respect to Contract Price and Contract Times by the submission of a Bid or becoming bound under a negotiated contract, or otherwise;

    b. The existence of such condition reasonably could have been discovered or revealed as a result of any examination, investigation, exploration, test, or study of the Site and contiguous areas expressly required by the Bidding Requirements or Contract Documents to be conducted by or for Contractor prior to Contractor's making such commitment; or

    c. Contractor failed to give the written notice required by Paragraph 5.04.A.

3. If Owner and Contractor agree regarding Contractor's entitlement to and the amount or extent of any adjustment in the Contract Price or Contract Times, then any such adjustment will be set forth in a Change Order.

4. Contractor may submit a Change Proposal regarding its entitlement to or the amount or extent of any adjustment in the Contract Price or Contract Times, no later than 30 days after Owner's issuance of the Owner's written statement to Contractor regarding the subsurface or physical condition in question.

F. *Underground Facilities; Hazardous Environmental Conditions*: Paragraph 5.05 governs rights and responsibilities regarding the presence or location of Underground Facilities. Paragraph 5.06 governs rights and responsibilities regarding Hazardous Environmental Conditions. The provisions of Paragraphs 5.03 and 5.04 are not applicable to the presence or location of Underground Facilities, or to Hazardous Environmental Conditions.

5.05 *Underground Facilities*

A. *Contractor's Responsibilities*: Unless it is otherwise expressly provided in the Supplementary Conditions, the cost of all of the following are included in the Contract Price, and Contractor shall have full responsibility for:

1. reviewing and checking all information and data regarding existing Underground Facilities at the Site;

2. complying with applicable state and local utility damage prevention Laws and Regulations;

3. verifying the actual location of those Underground Facilities shown or indicated in the Contract Documents as being within the area affected by the Work, by exposing such Underground Facilities during the course of construction;

4. coordination of the Work with the owners (including Owner) of such Underground Facilities, during construction; and

5. the safety and protection of all existing Underground Facilities at the Site, and repairing any damage thereto resulting from the Work.

Copyright© 2018 National Society of Professional Engineers, American Council of Engineering Companies, and American Society of Civil Engineers. All rights reserved.

B. *Notice by Contractor*: If Contractor believes that an Underground Facility that is uncovered or revealed at the Site was not shown or indicated on the Drawings, or was not shown or indicated on the Drawings with reasonable accuracy, then Contractor shall, promptly after first becoming aware thereof and before further disturbing conditions affected thereby or performing any Work in connection therewith (except in an emergency as required by Paragraph 7.15), notify Owner and Engineer in writing regarding such Underground Facility within 5 days.

C. *Engineer's Review*: Engineer will:

1. promptly review the Underground Facility and conclude whether such Underground Facility was not shown or indicated on the Drawings, or was not shown or indicated with reasonable accuracy;

2. identify and communicate with the owner of the Underground Facility; prepare recommendations to Owner (and if necessary issue any preliminary instructions to Contractor) regarding the Contractor's resumption of Work in connection with the Underground Facility in question;

3. obtain any pertinent cost or schedule information from Contractor; determine the extent, if any, to which a change is required in the Drawings or Specifications to reflect and document the consequences of the existence or location of the Underground Facility; and

4. advise Owner in writing of Engineer's findings, conclusions, and recommendations.

During such time, Contractor shall be responsible for the safety and protection of such Underground Facility.

D. *Owner's Statement to Contractor Regarding Underground Facility*: After receipt of Engineer's written findings, conclusions, and recommendations, Owner shall issue a written statement to Contractor (with a copy to Engineer) regarding the Underground Facility in question addressing the resumption of Work in connection with such Underground Facility, indicating whether any change in the Drawings or Specifications will be made, and adopting or rejecting Engineer's written findings, conclusions, and recommendations in whole or in part.

E. *Early Resumption of Work*: If at any time Engineer determines that Work in connection with the Underground Facility may resume prior to completion of Engineer's review or Owner's issuance of its statement to Contractor, because the Underground Facility in question and conditions affected by its presence have been adequately documented, and analyzed on a preliminary basis, then the Engineer may at its discretion instruct Contractor to resume such Work.

F. *Possible Price and Times Adjustments*

1. Contractor shall be entitled to an equitable adjustment in the Contract Price or Contract Times, to the extent that any existing Underground Facility at the Site that was not shown or indicated on the Drawings, or was not shown or indicated with reasonable accuracy, or any related delay, disruption, or interference, causes an increase or decrease in

Copyright© 2018 National Society of Professional Engineers, American Council of Engineering Companies, and American Society of Civil Engineers. All rights reserved.

Contractor's cost of, or time required for, performance of the Work; subject, however, to the following:

a. With respect to Work that is paid for on a unit price basis, any adjustment in Contract Price will be subject to the provisions of Paragraph 13.03;

b. Contractor's entitlement to an adjustment of the Contract Times is subject to the provisions of Paragraphs 4.05.D and 4.05.E; and

c. Contractor gave the notice required in Paragraph 5.05.B.

2. If Owner and Contractor agree regarding Contractor's entitlement to and the amount or extent of any adjustment in the Contract Price or Contract Times, then any such adjustment will be set forth in a Change Order.

3. Contractor may submit a Change Proposal regarding its entitlement to or the amount or extent of any adjustment in the Contract Price or Contract Times, no later than 30 days after Owner's issuance of the Owner's written statement to Contractor regarding the Underground Facility in question.

4. The information and data shown or indicated on the Drawings with respect to existing Underground Facilities at the Site is based on information and data (a) furnished by the owners of such Underground Facilities, or by others, (b) obtained from available records, or (c) gathered in an investigation conducted in accordance with the current edition of ASCE 38, Standard Guideline for the Collection and Depiction of Existing Subsurface Utility Data, by the American Society of Civil Engineers. If such information or data is incorrect or incomplete, Contractor's remedies are limited to those set forth in this Paragraph 5.05.F.

5.06 *Hazardous Environmental Conditions at Site*

A. *Reports and Drawings*: The Supplementary Conditions identify:

1. those reports known to Owner relating to Hazardous Environmental Conditions that have been identified at or adjacent to the Site;

2. drawings known to Owner relating to Hazardous Environmental Conditions that have been identified at or adjacent to the Site; and

3. Technical Data contained in such reports and drawings.

B. *Reliance by Contractor on Technical Data Authorized*: Contractor may rely upon the accuracy of the Technical Data expressly identified in the Supplementary Conditions with respect to such reports and drawings, but such reports and drawings are not Contract Documents. If no such express identification has been made, then Contractor may rely on the accuracy of the Technical Data as defined in Paragraph 1.01.A.46.b. Except for such reliance on Technical Data, Contractor may not rely upon or make any claim against Owner or Engineer, or any of their officers, directors, members, partners, employees, agents, consultants, or subcontractors, with respect to:

1. the completeness of such reports and drawings for Contractor's purposes, including, but not limited to, any aspects of the means, methods, techniques, sequences and procedures

Copyright© 2018 National Society of Professional Engineers, American Council of Engineering Companies, and American Society of Civil Engineers. All rights reserved.

of construction to be employed by Contractor, and safety precautions and programs incident thereto;

2. other data, interpretations, opinions, and information contained in such reports or shown or indicated in such drawings; or

3. any Contractor interpretation of or conclusion drawn from any Technical Data or any such other data, interpretations, opinions or information.

C. Contractor shall not be responsible for removing or remediating any Hazardous Environmental Condition encountered, uncovered, or revealed at the Site unless such removal or remediation is expressly identified in the Contract Documents to be within the scope of the Work.

D. Contractor shall be responsible for controlling, containing, and duly removing all Constituents of Concern brought to the Site by Contractor, Subcontractors, Suppliers, or anyone else for whom Contractor is responsible, and for any associated costs; and for the costs of removing and remediating any Hazardous Environmental Condition created by the presence of any such Constituents of Concern.

E. If Contractor encounters, uncovers, or reveals a Hazardous Environmental Condition whose removal or remediation is not expressly identified in the Contract Documents as being within the scope of the Work, or if Contractor or anyone for whom Contractor is responsible creates a Hazardous Environmental Condition, then Contractor shall immediately: (1) secure or otherwise isolate such condition; (2) stop all Work in connection with such condition and in any area affected thereby (except in an emergency as required by Paragraph 7.15); and (3) notify Owner and Engineer (and promptly thereafter confirm such notice in writing) within 5 days of first becoming aware of the condition. Owner shall promptly consult with Engineer concerning the necessity for Owner to retain a qualified expert to evaluate such condition or take corrective action, if any. Promptly after consulting with Engineer, Owner shall take such actions as are necessary to permit Owner to timely obtain required permits and provide Contractor the written notice required by Paragraph 5.06.F. If Contractor or anyone for whom Contractor is responsible created the Hazardous Environmental Condition in question, then Owner may remove and remediate the Hazardous Environmental Condition, and impose a set-off against payments to account for the associated costs.

F. Contractor shall not resume Work in connection with such Hazardous Environmental Condition or in any affected area until after Owner has obtained any required permits related thereto, and delivered written notice to Contractor either (1) specifying that such condition and any affected area is or has been rendered safe for the resumption of Work, or (2) specifying any special conditions under which such Work may be resumed safely. An equitable adjustment shall be made in the Contract Price or Contract Time, or both, to the extent that (i) they are attributable to the existence or location of any Hazardous Environmental Condition that was not shown or indicated or not shown or indicated with reasonable accuracy in the Contract Documents or a report listed in the Supplemental Conditions, (ii) Contractor did not know of and could not reasonably have been expected to be aware of or to have anticipated the Hazardous Environmental Conditions, (iii) Contractor did not negligently, recklessly, or intentionally cause the Hazardous Environmental Condition, and (iv)

Copyright© 2018 National Society of Professional Engineers, American Council of Engineering Companies, and American Society of Civil Engineers. All rights reserved.

Contractor notifies Owner and Engineer of such condition within 5 days after first becoming aware of such condition.

G. If Owner and Contractor cannot agree as to entitlement to or on the amount or extent, if any, of any adjustment in Contract Price or Contract Times, as a result of such Work stoppage, such special conditions under which Work is agreed to be resumed by Contractor, or any costs or expenses incurred in response to the Hazardous Environmental Condition, then within 30 days of Owner's written notice regarding the resumption of Work, Contractor may submit a Change Proposal, or Owner may impose a set-off. Entitlement to any such adjustment is subject to the provisions of Paragraphs 4.05.D, 4.05.E, 11.07, and 11.08.

H. If, after receipt of such written notice, Contractor does not agree to resume such Work based on a reasonable belief it is unsafe, or does not agree to resume such Work under such special conditions, then Owner may order the portion of the Work that is in the area affected by such condition to be deleted from the Work, following the contractual change procedures in Article 11. Owner may have such deleted portion of the Work performed by Owner's own forces or others in accordance with Article 8.

I. ~~To the fullest extent permitted by Laws and Regulations, Owner shall indemnify and hold harmless Contractor, Subcontractors, and Engineer, and the officers, directors, members, partners, employees, agents, consultants, and subcontractors of each and any of them, from and against all claims, costs, losses, and damages (including but not limited to all fees and charges of engineers, architects, attorneys, and other professionals, and all court, arbitration, or other dispute resolution costs) arising out of or relating to a Hazardous Environmental Condition, provided that such Hazardous Environmental Condition (1) was not shown or indicated in the Drawings, Specifications, or other Contract Documents, identified as Technical Data entitled to limited reliance pursuant to Paragraph 5.06.B, or identified in the Contract Documents to be included within the scope of the Work, and (2) was not created by Contractor or by anyone for whom Contractor is responsible. Nothing in this Paragraph 5.06.I obligates Owner to indemnify any individual or entity from and against the consequences of that individual's or entity's own negligence.~~

J. ~~To the fullest extent permitted by Laws and Regulations, Contractor shall indemnify and hold harmless Owner and Engineer, and the officers, directors, members, partners, employees, agents, consultants, and subcontractors of each and any of them, from and against all claims, costs, losses, and damages (including but not limited to all fees and charges of engineers, architects, attorneys, and other professionals and all court or arbitration or other dispute resolution costs) arising out of or relating to the failure to control, contain, or remove a Constituent of Concern brought to the Site by Contractor or by anyone for whom Contractor is responsible, or to a Hazardous Environmental Condition created by Contractor or by anyone for whom Contractor is responsible. Nothing in this Paragraph 5.06.J obligates Contractor to indemnify any individual or entity from and against the consequences of that individual's or entity's own negligence~~.

K. ~~The provisions of Paragraphs 5.03, 5.04, and 5.05 do not apply to the presence of Constituents of Concern or to a Hazardous Environmental Condition uncovered or revealed at the Site.~~

Copyright© 2018 National Society of Professional Engineers, American Council of Engineering Companies, and American Society of Civil Engineers. All rights reserved.

ARTICLE 6—BONDS AND INSURANCE

6.01 *Performance, Payment, and Other Bonds*

A. Contractor shall furnish a payment and performance bond ~~and a payment bond~~ in accordance with Sec.~~,~~ 255.05, Florida Statutes, ~~each~~ in an amount at least equal to the Contract Price, as security for the faithful performance and payment of Contractor's obligations under the Contract. These bonds must remain in effect until one year after the date when final payment becomes due or until completion of the correction period specified in Paragraph 15.08, whichever is later, except as provided otherwise by Laws or Regulations, the terms of a prescribed bond form, the Supplementary Conditions, or other provisions of the Contract. The obligations, duties, responsibilities, and requirements of Contractor set forth in this Contract shall be incorporated into Contractor's performance bond.

B. Contractor shall also furnish such other bonds (if any) as are required by the Supplementary Conditions or other provisions of the Contract.

C. All bonds must be in the form included in the Bidding Documents or otherwise specified by Owner prior to execution of the Contract~~, except as provided otherwise by Laws or Regulations, and must be issued and signed by a surety named in "Companies Holding Certificates of Authority as Acceptable Sureties on Federal Bonds and as Acceptable Reinsuring Companies" as published in Department Circular 570 (as amended and supplemented) by the Bureau of the Fiscal Service, U.S. Department of the Treasury~~. A bond signed by an agent or attorney-in-fact must be accompanied by a certified copy of that individual's authority to bind the surety. The evidence of authority must show that it is effective on the date the agent or attorney-in-fact signed the accompanying bond. The payment and performance bonds shall be recorded in the public records of Volusia County, Florida.

D. Contractor shall obtain the required bonds from surety companies that are duly licensed or authorized, in ~~the state or jurisdiction in which the Project is located~~Florida, to issue bonds in the required amounts.

E. If the surety on a bond furnished by Contractor is declared bankrupt or becomes insolvent, or the surety ceases to meet the requirements above, then Contractor shall promptly notify Owner and Engineer in writing and shall, within 20 days after the event giving rise to such notification, provide another bond and surety, both of which must comply with the bond and surety requirements above.

F. Prior to the date of commencement as set forth in the Notice to Proceed, ~~I~~if Contractor has failed to obtain a required bond, Owner may exclude the Contractor from the Site and exercise Owner's termination rights under Article 16.

G. Upon request to Owner from any Subcontractor, Supplier, or other person or entity claiming to have furnished labor, services, materials, or equipment used in the performance of the Work, Owner shall provide a copy of the payment bond to such person or entity.

H. Upon request to Contractor from any Subcontractor, Supplier, or other person or entity claiming to have furnished labor, services, materials, or equipment used in the performance of the Work, Contractor shall provide a copy of the payment bond to such person or entity.

EJCDC® C-700, Standard General Conditions of the Construction Contract.
Copyright© 2018 National Society of Professional Engineers, American Council of Engineering Companies, and American Society of Civil Engineers. All rights reserved.

6.02 *Insurance—General Provisions*

A. ~~Owner and~~ Contractor shall obtain and maintain insurance as required in this article and in the Supplementary Conditions. In the event of any conflict between this Paragraph 6.02 and the specific insurance requirements of Contractor set forth in Supplemental Conditions, the specific requirements in Supplemental~~ry~~ Conditions shall govern.

B. All insurance required by the Contract to be purchased and maintained by ~~Owner or~~ Contractor shall be obtained from insurance companies that are duly licensed or authorized in the ~~s~~State ~~or jurisdiction in which the Project is located~~of Florida to issue insurance policies for the required limits and coverages. Unless a different standard is indicated in the Supplementary Conditions, all companies that provide insurance policies required under this Contract shall have an A.M. Best rating of A-VII or better.

C. Alternative forms of insurance coverage, including but not limited to self-insurance and "Occupational Accident and Excess Employer's Indemnity Policies," are not sufficient to meet the insurance requirements of this Contract, unless expressly allowed in the Supplementary Conditions.

D. Contractor shall deliver to Owner, with copies to each additional insured identified in the Contract, certificates of insurance and endorsements establishing that Contractor has obtained and is maintaining the policies and coverages required by the Contract. Upon request by Owner or any other insured, Contractor shall also furnish other evidence of such required insurance, including but not limited to copies of policies, documentation of applicable self-insured retentions (if allowed) and deductibles, full disclosure of all relevant exclusions, and evidence of insurance required to be purchased and maintained by Subcontractors or Suppliers. In any documentation furnished under this provision, Contractor, Subcontractors, and Suppliers may block out (redact) (1) any confidential premium or pricing information and (2) any wording specific to a project or jurisdiction other than those applicable to this Contract.

E. ~~Owner shall deliver to Contractor, with copies to each additional insured identified in the Contract, certificates of insurance and endorsements establishing that Owner has obtained and is maintaining the policies and coverages required of Owner by the Contract (if any). Upon request by Contractor or any other insured, Owner shall also provide other evidence of such required insurance (if any), including but not limited to copies of policies, documentation of applicable self-insured retentions (if allowed) and deductibles, and full disclosure of all relevant exclusions. In any documentation furnished under this provision, Owner may block out (redact) (1) any confidential premium or pricing information and (2) any wording specific to a project or jurisdiction other than those relevant to this Contract.~~

F. Failure of Owner ~~or Contractor~~ to demand such certificates or other evidence of the Contractor~~other party~~'s full compliance with these insurance requirements, or failure of Owner ~~or Contractor~~ to identify a deficiency in compliance from the evidence provided, will not be construed as a waiver of the ~~other party~~Contractor's obligation to obtain and maintain such insurance.

G. In addition to the liability insurance required to be provided by Contractor, the Owner, at Owner's option, may purchase and maintain Owner's own liability insurance. Owner's liability policies, if any, operate separately and independently from policies required to be provided

Copyright© 2018 National Society of Professional Engineers, American Council of Engineering Companies, and American Society of Civil Engineers. All rights reserved.

by Contractor, and Contractor cannot rely upon Owner's liability policies for any of Contractor's obligations to the Owner, Engineer, or third parties.

H. Contractor shall require:

1. Subcontractors to purchase and maintain worker's compensation, commercial general liability, and other insurance that is appropriate for their participation in the Project, and to name as additional insureds Owner and Engineer (and any other individuals or entities identified in the Supplementary Conditions as additional insureds on Contractor's liability policies) on each Subcontractor's commercial general liability insurance policy; and

2. Suppliers to purchase and maintain insurance that is appropriate for their participation in the Project.

I. If ~~either party~~Contractor does not purchase or maintain the insurance required ~~of such party~~ by the Contract, Contractor~~such party~~ shall notify the Owner~~other party~~ in writing of such failure to purchase prior to the start of the Work, or of such failure to maintain prior to any change in the required coverage.

J. If Contractor has failed to obtain and maintain required insurance, Contractor's entitlement to enter or remain at the Site will end immediately, and Owner may impose an appropriate set-off against payment for any associated costs (including but not limited to the cost of purchasing necessary insurance coverage), and exercise Owner's termination rights under Article 16.

K. Without prejudice to any other right or remedy, if Contractor~~a party~~ has failed to obtain required insurance, the Owner~~other party~~ may elect (but is in no way obligated) to obtain equivalent insurance to protect ~~such other party's~~Owner's interests at the expense of the Contactor~~party~~ who was required to provide such coverage, and the Contract Price will be adjusted accordingly.

L. Owner does not represent that insurance coverage and limits established in this Contract necessarily will be adequate to protect Contractor or Contractor's interests. Contractor is responsible for determining whether such coverage and limits are adequate to protect its interests, and for obtaining and maintaining any additional insurance that Contractor deems necessary.

M. The insurance and insurance limits required herein will not be deemed as a limitation on Contractor's liability, or that of its Subcontractors or Suppliers, under the indemnities granted to Owner and other individuals and entities in the Contract or otherwise.

N. All the policies of insurance required to be purchased and maintained under this Contract will contain a provision or endorsement that the coverage afforded will not be canceled, or renewal refused, until at least 10 days prior written notice has been given to the purchasing policyholder. Within three days of receipt of any such written notice, the purchasing policyholder shall provide a copy of the notice to each other insured and Engineer.

6.03 *Contractor's Insurance*

A. *Required Insurance*: Contractor shall purchase and maintain Worker's Compensation, Commercial General Liability, and other insurance pursuant to the specific requirements of the Supplementary Conditions.

Copyright© 2018 National Society of Professional Engineers, American Council of Engineering Companies, and American Society of Civil Engineers. All rights reserved.

B. *General Provisions*: The policies of insurance required by this Paragraph 6.03 as supplemented must:

1. include at least the specific coverages required;
2. be written for not less than the limits provided, or those required by Laws or Regulations, whichever is greater;
3. remain in effect at least until the Work is complete (as set forth in Paragraph 15.06.D), and longer if expressly required elsewhere in this Contract, and at all times thereafter when Contractor may be correcting, removing, or replacing defective Work as a warranty or correction obligation, or otherwise, or returning to the Site to conduct other tasks arising from the Contract;
4. apply with respect to the performance of the Work, whether such performance is by Contractor, any Subcontractor or Supplier, or by anyone directly or indirectly employed by any of them to perform any of the Work, or by anyone for whose acts any of them may be liable; ~~and~~
5. include completed operations coverage:
   a. Such insurance shall remain in effect for 10 years after Substantial Completion.
   b. Contractor shall furnish Owner and each additional insured identified in the Supplementary Conditions to whom a certificate of insurance has been issued, evidence satisfactory to Owner and any such additional insured of continuation of such insurance at final payment.
6. make the Contractor solely responsible for any insurance deductible or self-insured retention.
7. include all necessary endorsements to support the stated requirements.

C. *Additional Insureds*: The Contractor's commercial general liability, automobile liability, employer's liability, umbrella or excess, pollution liability, and unmanned aerial vehicle liability policies, if required by this Contract, must:

1. include and list as additional insureds Owner and Engineer, and any individuals or entities identified as additional insureds in the Supplementary Conditions;
2. include coverage for the respective officers, directors, members, partners, employees, and consultants of all such additional insureds;
3. afford primary coverage to these additional insureds for all claims covered thereby (including as applicable those arising from both ongoing and completed operations);
4. not seek contribution from insurance maintained by the additional insured; and
5. as to commercial general liability insurance, apply to additional insureds with respect to liability caused in whole or in part by Contractor's acts or omissions, or the acts and omissions of those working on Contractor's behalf, in the performance of Contractor's operations.

Copyright© 2018 National Society of Professional Engineers, American Council of Engineering Companies, and American Society of Civil Engineers. All rights reserved.

6.04 *Builder's Risk and Other Property Insurance*

A. *Builder's Risk*: Unless otherwise provided in the Supplementary Conditions, Contractor shall purchase and maintain builder's risk insurance upon the Work on a completed value basis, in the amount of the Work's full insurable replacement cost (subject to such deductible amounts as may be provided in the Supplementary Conditions or required by Laws and Regulations). The specific requirements applicable to the builder's risk insurance are set forth in the Supplementary Conditions.

B. *Property Insurance for Facilities of Owner Where Work Will Occur*: ~~Owner~~ Contractor is responsible for obtaining and maintaining property insurance covering each existing structure, building, or facility in which any part of the Work will occur, or to which any part of the Work will attach or be adjoined. Such property insurance will be written on a special perils (all-risk) form, on a replacement cost basis, providing coverage consistent with that required for the builder's risk insurance, and will be maintained until the Work is complete, as set forth in Paragraph 15.06.D. Such policy shall identify both Contractor and Owner as additional insureds. Contractor shall be solely responsible for any deductible.

C. *Property Insurance for Substantially Complete Facilities*: Promptly after Substantial Completion, and before actual occupancy or use of the substantially completed Work, Contractor~~Owner~~ will obtain property insurance for such substantially completed Work, and maintain such property insurance at least until the Work is complete, as set forth in Paragraph 15.06.D. Such property insurance will be written on a special perils (all-risk) form, on a replacement cost basis, and provide coverage consistent with that required for the builder's risk insurance. The builder's risk insurance may terminate upon written confirmation of ~~Owner's~~ Contractor's procurement of such property insurance.

D. *Partial Occupancy or Use by Owner*: If Owner will occupy or use a portion or portions of the Work prior to Substantial Completion of all the Work, as provided in Paragraph 15.04, then Owner ~~(directly, if it is the purchaser of the builder's risk policy, or~~ through Contractor~~)~~ will provide advance notice of such occupancy or use to the builder's risk or all-risk insurer, and Contractor shall obtain an occupancy or use endorsement consenting to the continuation of coverage prior to Owner commencing such partial occupancy or use.

E. *Insurance of Other Property; Additional Insurance*: If the express insurance provisions of the Contract do not require or address the insurance of a property item or interest, then the entity or individual owning such property item will be responsible for insuring it. If Contractor elects to obtain other special insurance to be included in or supplement the builder's risk or property insurance policies provided under this Paragraph 6.04, it may do so at Contractor's expense.

6.05 *Property Losses; Subrogation*

A. The builder's risk insurance policy purchased and maintained in accordance with Paragraph 6.04 (or an installation floater policy if authorized by the Supplementary Conditions), will contain provisions to the effect that in the event of payment of any loss or damage the insurer will have no rights of recovery against any insureds thereunder, or against Engineer or its consultants, or their officers, directors, members, partners, employees, agents, consultants, or subcontractors.

Copyright© 2018 National Society of Professional Engineers, American Council of Engineering Companies, and American Society of Civil Engineers. All rights reserved.

1. Owner and Contractor waive all rights against each other and the respective officers, directors, members, partners, employees, agents, consultants, and subcontractors of each and any of them, for all losses and damages caused by, arising out of, or resulting from any of the perils, risks, or causes of loss covered by such policies and any other property insurance applicable to the Work; and, in addition, waive all such rights against Engineer, its consultants, all individuals or entities identified in the Supplementary Conditions as builder's risk or installation floater insureds, and the officers, directors, members, partners, employees, agents, consultants, and subcontractors of each and any of them, under such policies for losses and damages so caused.

2. None of the above waivers extends to the rights that any party making such waiver may have to the proceeds of insurance held by ~~Owner or~~ Contractor as trustee or fiduciary, or otherwise payable under any policy so issued.

B. ~~Any property insurance policy maintained by Owner covering any loss, damage, or consequential loss to Owner's existing structures, buildings, or facilities in which any part of the Work will occur, or to which any part of the Work will attach or adjoin; to adjacent structures, buildings, or facilities of Owner; or to part or all of the completed or substantially completed Work, during partial occupancy or use pursuant to Paragraph 15.04, after Substantial Completion pursuant to Paragraph 15.03, or after final payment pursuant to Paragraph 15.06, will contain provisions to the effect that in the event of payment of any loss or damage the insurer will have no rights of recovery against any insureds thereunder, or against Contractor, Subcontractors, or Engineer, or the officers, directors, members, partners, employees, agents, consultants, or subcontractors of each and any of them, and that the insured is allowed to waive the insurer's rights of subrogation in a written contract executed prior to the loss, damage, or consequential loss.~~

1. ~~Owner waives all rights against Contractor, Subcontractors, and Engineer, and the officers, directors, members, partners, employees, agents, consultants and subcontractors of each and any of them, for all losses and damages caused by, arising out of, or resulting from fire or any of the perils, risks, or causes of loss covered by such policies.~~

C. ~~The waivers in this Paragraph 6.05 include the waiver of rights due to business interruption, loss of use, or other consequential loss extending beyond direct physical loss or damage to Owner's property or the Work caused by, arising out of, or resulting from fire or other insured peril, risk, or cause of loss.~~

D. Contractor shall be responsible for assuring that each Subcontract contains provisions whereby the Subcontractor waives all rights against Owner, Contractor, all individuals or entities identified in the Supplementary Conditions as insureds, the Engineer and its consultants, and the officers, directors, members, partners, employees, agents, consultants, and subcontractors of each and any of them, for all losses and damages caused by, arising out of, relating to, or resulting from fire or other peril, risk, or cause of loss covered by builder's risk insurance, installation floater, and any other property insurance applicable to the Work.

6.06 *Receipt and Application of Property Insurance Proceeds*

A. Any insured loss under the builder's risk and other policies of property insurance required by Paragraph 6.04 will be adjusted and settled with the named insured that purchased the policy.

Copyright© 2018 National Society of Professional Engineers, American Council of Engineering Companies, and American Society of Civil Engineers. All rights reserved.

Such named insured shall act as fiduciary for the other insureds, and give notice to such other insureds that adjustment and settlement of a claim is in progress. Any other insured may state its position regarding a claim for insured loss in writing within 15 days after notice of such claim.

B. Proceeds for such insured losses may be made payable by the insurer either jointly to multiple insureds, or to the named insured that purchased the policy in its own right and as fiduciary for other insureds, subject to the requirements of any applicable mortgage clause. A named insured receiving insurance proceeds under the builder's risk and other policies of insurance required by Paragraph 6.04 shall maintain such proceeds in a segregated account, and distribute such proceeds in accordance with such agreement as the parties in interest may reach, or as otherwise required under the dispute resolution provisions of this Contract or applicable Laws and Regulations.

C. If no other special agreement is reached, Contractor shall repair or replace the damaged Work, using allocated insurance proceeds.

D. Owner, at its sole discretion, may elect to fund the costs associated with any property insurance claim, ~~exclsuing~~excluding the deductible, and seek reimbursement from Contractor's policy that identifies both Contractor and Owner as named insureds. If Owner exercises this right, it shall have sole authority to settle and adjust any claim and receive reimbursement under the policy with the proceeds made payable to ~~o~~Owner. Contractor shall have the obligation to cooperate and comply with all terms and provisions of the policy and its failure to do so shall ~~constitue~~constitute a material breach of the Contract. If O~~o~~wner does not elect this right, Contractor shall be required to fund the costs associated with any property insurance claim and seek reimbursement under the policy.

E. In the event of any conflict between this Paragraph 6.06 and the specific insurance requirements of Contractor set forth in the Supplemental Conditions, the specific insurance requirements in the Supplemental Conditions shall govern.

ARTICLE 7—CONTRACTOR'S RESPONSIBILITIES

7.01 *Contractor's Means and Methods of Construction*

A. Contractor shall be solely responsible for the means, methods, techniques, sequences, and procedures of construction.

B. If the Contract Documents note, or Contractor determines, that professional engineering or other design services are needed to carry out Contractor's responsibilities for construction means, methods, techniques, sequences, and procedures, or for Site safety, then Contractor shall cause such services to be provided by a properly licensed design professional, at Contractor's expense. Such services are not Owner-delegated professional design services under this Contract, and neither Owner nor Engineer has any responsibility with respect to (1) Contractor's determination of the need for such services, (2) the qualifications or licensing of the design professionals retained or employed by Contractor, (3) the performance of such services, or (4) any errors, omissions, or defects in such services.

Copyright© 2018 National Society of Professional Engineers, American Council of Engineering Companies, and American Society of Civil Engineers. All rights reserved.

7.02 *Supervision and Superintendence*

A. Contractor shall supervise, inspect, and direct the Work competently and efficiently, devoting such attention thereto and applying such skills and expertise as may be necessary to perform the Work in accordance with the Contract Documents.

B. At all times during the progress of the Work, Contractor shall assign a competent resident superintendent who will not be replaced without written notice to Owner and Engineer except under extraordinary circumstances.

7.03 *Labor; Working Hours*

A. Contractor shall provide competent, suitably qualified personnel to survey and lay out the Work and perform construction as required by the Contract Documents. Contractor shall maintain good discipline and order at the Site.

B. Contractor shall be fully responsible to Owner and Engineer for all acts and omissions of Contractor's employees; of Suppliers and Subcontractors, and their employees; and of any other individuals or entities performing or furnishing any of the Work, just as Contractor is responsible for Contractor's own acts and omissions. The Contractor agrees to remove from the Project an employee, Subcontractor, or Subcontractor employee that commits any breach of the Contract Documents or any breach of the Owner's written rules and regulations regarding ~~the~~ jobsite conduct.

C. The Contractor shall enforce strict discipline and good order among the Contractor's employees and other persons ~~canying~~carrying out the Work. Contractor shall not permit employment of unfit persons or persons not properly skilled in tasks assigned to them. The Contractor shall require all construction personnel to maintain a neat general appearance at all times. Shirts, trousers and proper shoes are required apparel. The display of vulgar words, signs or figures is prohibited. Sandals and flip-flops are prohibited on the Project site. The use of radios, tape players, CD players, boom boxes, sound producing devices and the like are prohibited on the Project site. The Contractor shall not be permitted to use restrooms or other ~~sanitaiy~~sanitary facilities within the Owner's existing buildings or on-site facilities.

D. Except as otherwise required for the safety or protection of persons or the Work or property at the Site or adjacent thereto, and except as otherwise stated in the Contract Documents, all Work at the Site will be performed during regular working hours, Monday through Friday. Contractor will not perform Work on a Saturday, Sunday, or any legal holiday. Contractor may perform Work outside regular working hours or on Saturdays, Sundays, or legal holidays only with Owner's written consent, which will not be unreasonably withheld.

7.04 *Services, Materials, and Equipment*

A. Unless otherwise specified in the Contract Documents, Contractor shall provide and assume full responsibility for all services, materials, equipment, labor, transportation, construction equipment and machinery, tools, appliances, fuel, power, light, heat, telephone, water, sanitary facilities, temporary facilities, and all other facilities and incidentals necessary for the performance, testing, start up, and completion of the Work, whether or not such items are specifically called for in the Contract Documents.

Copyright© 2018 National Society of Professional Engineers, American Council of Engineering Companies, and American Society of Civil Engineers. All rights reserved.

B. All materials and equipment incorporated into the Work must be new and of good quality, except as otherwise provided in the Contract Documents. All special warranties and guarantees required by the Specifications will expressly run to the benefit of Owner. If required by Engineer, Contractor shall furnish satisfactory evidence (including reports of required tests) as to the source, kind, and quality of materials and equipment.

C. All materials and equipment must be stored, applied, installed, connected, erected, protected, used, cleaned, and conditioned in accordance with instructions of the applicable Supplier, except as otherwise may be provided in the Contract Documents.

7.05 *"Or Equals"*

A. *Contractor's Request; Governing Criteria*: Whenever an item of equipment or material is specified or described in the Contract Documents by using the names of one or more proprietary items or specific Suppliers, the Contract Price has been based upon Contractor furnishing such item as specified. The specification or description of such an item is intended to establish the type, function, appearance, and quality required. Unless the specification or description contains or is followed by words reading that no like, equivalent, or "or equal" item is permitted, Contractor may request that Engineer authorize the use of other items of equipment or material, or items from other proposed Suppliers, under the circumstances described below.

1. If Engineer in its sole discretion determines that an item of equipment or material proposed by Contractor is functionally equal to that named and sufficiently similar so that no change in related Work will be required, Engineer will deem it an "or equal" item. For the purposes of this paragraph, a proposed item of equipment or material will be considered functionally equal to an item so named if:

a. in the exercise of reasonable judgment Engineer determines that the proposed item:

1) is at least equal in materials of construction, quality, durability, appearance, strength, and design characteristics;

2) will reliably perform at least equally well the function and achieve the results imposed by the design concept of the completed Project as a functioning whole;

3) has a proven record of performance and availability of responsive service; and

4) is not objectionable to Owner.

b. Contractor certifies that, if the proposed item is approved and incorporated into the Work:

1) there will be no increase in cost to the Owner or increase in Contract Times; and

2) the item will conform substantially to the detailed requirements of the item named in the Contract Documents.

B. *Contractor's Expense*: Contractor shall provide all data in support of any proposed "or equal" item at Contractor's expense.

C. *Engineer's Evaluation and Determination*: Engineer will be allowed a reasonable time to evaluate each "or-equal" request. Engineer may require Contractor to furnish additional data

Copyright© 2018 National Society of Professional Engineers, American Council of Engineering Companies, and American Society of Civil Engineers. All rights reserved.

about the proposed "or-equal" item. Engineer will be the sole judge of acceptability. No "or-equal" item will be ordered, furnished, installed, or utilized until Engineer's review is complete and Engineer determines that the proposed item is an "or-equal," which will be evidenced by an approved Shop Drawing or other written communication. Engineer will advise Contractor in writing of any negative determination.

D. *Effect of Engineer's Determination*: Neither approval nor denial of an "or-equal" request will result in any change in Contract Price. The Engineer's denial of an "or-equal" request will be final and binding, and may not be reversed through an appeal under any provision of the Contract.

E. *Treatment as a Substitution Request*: If Engineer determines that an item of equipment or material proposed by Contractor does not qualify as an "or-equal" item, Contractor may request that Engineer consider the item a proposed substitute pursuant to Paragraph 7.06.

7.06 *Substitutes*

A. *Contractor's Request; Governing Criteria*: Unless the specification or description of an item of equipment or material required to be furnished under the Contract Documents contains or is followed by words reading that no substitution is permitted, Contractor may request that Engineer authorize the use of other items of equipment or material under the circumstances described below. To the extent possible such requests must be made before commencement of related construction at the Site.

1. Contractor shall submit sufficient information as provided below to allow Engineer to determine if the item of material or equipment proposed is functionally equivalent to that named and an acceptable substitute therefor. Engineer will not accept requests for review of proposed substitute items of equipment or material from anyone other than Contractor.

2. The requirements for review by Engineer will be as set forth in Paragraph 7.06.B, as supplemented by the Specifications, and as Engineer may decide is appropriate under the circumstances.

3. Contractor shall make written application to Engineer for review of a proposed substitute item of equipment or material that Contractor seeks to furnish or use. The application:

   a. will certify that the proposed substitute item will:

      1) perform adequately the functions and achieve the results called for by the general design;

      2) be similar in substance to the item specified; and

      3) be suited to the same use as the item specified.

   b. will state:

      1) the extent, if any, to which the use of the proposed substitute item will necessitate a change in Contract Times;

      2) whether use of the proposed substitute item in the Work will require a change in any of the Contract Documents (or in the provisions of any other direct contract

Copyright© 2018 National Society of Professional Engineers, American Council of Engineering Companies, and American Society of Civil Engineers. All rights reserved.

with Owner for other work on the Project) to adapt the design to the proposed substitute item; and

3) whether incorporation or use of the proposed substitute item in connection with the Work is subject to payment of any license fee or royalty.

c. will identify:

1) all variations of the proposed substitute item from the item specified; and

2) available engineering, sales, maintenance, repair, and replacement services.

d. will contain an itemized estimate of all costs or credits that will result directly or indirectly from use of such substitute item, including but not limited to changes in Contract Price, shared savings, costs of redesign, and claims of other contractors affected by any resulting change.

B. *Engineer's Evaluation and Determination*: Engineer will be allowed a reasonable time to evaluate each substitute request, and to obtain comments and direction from Owner. Engineer may require Contractor to furnish additional data about the proposed substitute item. Engineer will be the sole judge of acceptability. No substitute will be ordered, furnished, installed, or utilized until Engineer's review is complete and Engineer determines that the proposed item is an acceptable substitute. Engineer's determination will be evidenced by a Field Order or a proposed Change Order accounting for the substitution itself and all related impacts, including changes in Contract Price or Contract Times. Engineer will advise Contractor in writing of any negative determination.

C. *Special Guarantee*: Owner may require Contractor to furnish at Contractor's expense a special performance guarantee or other surety with respect to any substitute.

D. *Reimbursement of Engineer's Cost*: Engineer will record Engineer's costs in evaluating a substitute proposed or submitted by Contractor. Whether or not Engineer approves a substitute so proposed or submitted by Contractor, Contractor shall reimburse Owner for the reasonable charges of Engineer for evaluating each such proposed substitute. Contractor shall also reimburse Owner for the reasonable charges of Engineer for making changes in the Contract Documents (or in the provisions of any other direct contract with Owner) resulting from the acceptance of each proposed substitute.

E. *Contractor's Expense*: Contractor shall provide all data in support of any proposed substitute at Contractor's expense.

F. *Effect of Engineer's Determination*: If Engineer approves the substitution request, Contractor shall execute the proposed Change Order and proceed with the substitution. The Engineer's denial of a substitution request will be final and binding, and may not be reversed through an appeal under any provision of the Contract. Contractor may challenge the scope of reimbursement costs imposed under Paragraph 7.06.D, by timely submittal of a Change Proposal.

7.07 *Concerning Subcontractors and Suppliers*

A. Contractor may retain Subcontractors and Suppliers for the performance of parts of the Work. Such Subcontractors and Suppliers must be acceptable to Owner. The Contractor's retention

Copyright© 2018 National Society of Professional Engineers, American Council of Engineering Companies, and American Society of Civil Engineers. All rights reserved.

of a Subcontractor or Supplier for the performance of parts of the Work will not relieve Contractor's obligation to Owner to perform and complete the Work in accordance with the Contract Documents.

B. Contractor shall retain specific Subcontractors and Suppliers for the performance of designated parts of the Work if required by the Contract to do so.

C. Subsequent to the submittal of Contractor's Bid or final negotiation of the terms of the Contract, Owner may not require Contractor to retain any Subcontractor or Supplier to furnish or perform any of the Work against which Contractor has reasonable objection.

D. Prior to entry into any binding subcontract or purchase order, Contractor shall submit to Owner the identity of the proposed Subcontractor or Supplier (unless Owner has already deemed such proposed Subcontractor or Supplier acceptable during the bidding process or otherwise). Such proposed Subcontractor or Supplier shall be deemed acceptable to Owner unless Owner raises a substantive, reasonable objection within 5 days.

E. Owner may require the replacement of any Subcontractor or Supplier. Owner also may require Contractor to retain specific replacements; provided, however, that Owner may not require a replacement to which Contractor has a reasonable objection. If Contractor has submitted the identity of certain Subcontractors or Suppliers for acceptance by Owner, and Owner has accepted it (either in writing or by failing to make written objection thereto), then Owner may subsequently revoke the acceptance of any such Subcontractor or Supplier so identified solely on the basis of substantive, reasonable objection after due investigation. Contractor shall submit an acceptable replacement for the rejected Subcontractor or Supplier.

F. If Owner requires the replacement of any Subcontractor or Supplier retained by Contractor to perform any part of the Work, then Contractor shall be entitled to an adjustment in Contract Price or Contract Times, with respect to the replacement; and Contractor shall initiate a Change Proposal for such adjustment within 30 days of Owner's requirement of replacement.

G. No acceptance by Owner of any such Subcontractor or Supplier, whether initially or as a replacement, will constitute a waiver of the right of Owner to the completion of the Work in accordance with the Contract Documents.

H. On a monthly basis, Contractor shall submit to Engineer a complete list of all Subcontractors and Suppliers having a direct contract with Contractor, and of all other Subcontractors and Suppliers known to Contractor at the time of submittal.

I. Contractor shall be solely responsible for scheduling and coordinating the work of Subcontractors and Suppliers.

J. The divisions and sections of the Specifications and the identifications of any Drawings do not control Contractor in dividing the Work among Subcontractors or Suppliers, or in delineating the Work to be performed by any specific trade.

K. All Work performed for Contractor by a Subcontractor or Supplier must be pursuant to an appropriate contractual agreement that specifically binds the Subcontractor or Supplier to the applicable terms and conditions of the Contract for the benefit of Owner and Engineer.

Copyright© 2018 National Society of Professional Engineers, American Council of Engineering Companies, and American Society of Civil Engineers. All rights reserved.

L. Owner may furnish to any Subcontractor or Supplier, to the extent practicable, information about amounts paid to Contractor for Work performed for Contractor by the Subcontractor or Supplier.

M. Contractor shall restrict all Subcontractors and Suppliers from communicating with Engineer or Owner, except through Contractor or in case of an emergency, or as otherwise expressly allowed in this Contract.

7.08 *Patent Fees and Royalties*

A. Contractor shall pay all license fees and royalties and assume all costs incident to the use in the performance of the Work or the incorporation in the Work of any invention, design, process, product, or device which is the subject of patent rights or copyrights held by others. If an invention, design, process, product, or device is specified in the Contract Documents for use in the performance of the Work and if, to the actual knowledge of Owner or Engineer, its use is subject to patent rights or copyrights calling for the payment of any license fee or royalty to others, the existence of such rights will be disclosed in the Contract Documents.

B. ~~To the fullest extent permitted by Laws and Regulations, Owner shall indemnify and hold harmless Contractor, and its officers, directors, members, partners, employees, agents, consultants, and subcontractors, from and against all claims, costs, losses, and damages (including but not limited to all fees and charges of engineers, architects, attorneys, and other professionals, and all court or arbitration or other dispute resolution costs) arising out of or relating to any infringement of patent rights or copyrights incident to the use in the performance of the Work or resulting from the incorporation in the Work of any invention, design, process, product, or device specified in the Contract Documents, but not identified as being subject to payment of any license fee or royalty to others required by patent rights or copyrights.~~

C. ~~To the fullest extent permitted by Laws and Regulations, Contractor shall indemnify and hold harmless Owner and Engineer, and the officers, directors, members, partners, employees, agents, consultants and subcontractors of each and any of them, from and against all claims, costs, losses, and damages (including but not limited to all fees and charges of engineers, architects, attorneys, and other professionals and all court or arbitration or other dispute resolution costs) arising out of or relating to any infringement of patent rights or copyrights incident to the use in the performance of the Work or resulting from the incorporation in the Work of any invention, design, process, product, or device not specified in the Contract Documents.~~

7.09 *Permits*

A. Unless otherwise provided in the Contract Documents, Contractor shall obtain and pay for all construction permits, licenses, and certificates of occupancy. Owner shall assist Contractor, when necessary, in obtaining such permits and licenses. Contractor shall pay all governmental charges and inspection fees necessary for the prosecution of the Work which are applicable at the time of the submission of Contractor's Bid (or when Contractor became bound under a negotiated contract). Owner shall pay all charges of utility owners for connections for providing permanent service to the Work.

Copyright© 2018 National Society of Professional Engineers, American Council of Engineering Companies, and American Society of Civil Engineers. All rights reserved.

7.10 *Taxes*

A. Contractor shall pay all sales, consumer, use, and other similar taxes required to be paid by Contractor in accordance with the Laws and Regulations of the place of the Project which are applicable during the performance of the Work.

7.11 *Laws and Regulations*

A. Contractor shall give all notices required by and shall comply with all Laws and Regulations applicable to the performance of the Work. Neither Owner nor Engineer shall be responsible for monitoring Contractor's compliance with any Laws or Regulations.

B. If Contractor performs any Work or takes any other action knowing or having reason to know that it is contrary to Laws or Regulations, Contractor shall bear all resulting costs and losses, and shall indemnify and hold harmless Owner and Engineer, and the officers, directors, members, partners, employees, agents, consultants, and subcontractors of each and any of them, from and against all claims, costs, losses, and damages (including but not limited to all fees and charges of engineers, architects, attorneys, and other professionals and all court or arbitration or other dispute resolution costs) arising out of or relating to such Work or other action. It is not Contractor's responsibility to make certain that the Work described in the Contract Documents is in accordance with Laws and Regulations, but this does not relieve Contractor of its obligations under Paragraph 3.03.

C. Owner or Contractor may give written notice to the other party of any changes after the submission of Contractor's Bid (or after the date when Contractor became bound under a negotiated contract) in Laws or Regulations having an effect on the cost or time of performance of the Work, including but not limited to changes in Laws or Regulations having an effect on procuring permits and on sales, use, value-added, consumption, and other similar taxes. If Owner and Contractor are unable to agree on entitlement to or on the amount or extent, if any, of any adjustment in Contract Price or Contract Times resulting from such changes, then within 30 days of such written notice Contractor may submit a Change Proposal, or Owner may initiate a Claim.

7.12 *Record Documents*

A. Contractor shall maintain in a safe place at the Site one printed record copy of all Drawings, Specifications, Addenda, Change Orders, Work Change Directives, Field Orders, written interpretations and clarifications, and approved Shop Drawings. Contractor shall keep such record documents in good order and annotate them to show changes made during construction. These record documents, together with all approved Samples, will be available to Engineer for reference. Upon completion of the Work, Contractor shall deliver these record documents to Engineer.

7.13 *Safety and Protection*

A. Contractor shall be solely responsible for initiating, maintaining, and supervising all safety precautions and programs in connection with the Work. Such responsibility does not relieve Subcontractors of their responsibility for the safety of persons or property in the performance of their work, nor for compliance with applicable safety Laws and Regulations.

EJCDC® C-700, Standard General Conditions of the Construction Contract.
Copyright© 2018 National Society of Professional Engineers, American Council of Engineering Companies, and American Society of Civil Engineers. All rights reserved.

B. Contractor shall designate a qualified and experienced safety representative whose duties and responsibilities are the prevention of Work-related accidents and the maintenance and supervision of safety precautions and programs.

C. Contractor shall take all necessary precautions for the safety of, and shall provide the necessary protection to prevent damage, injury, or loss to:

1. all persons on the Site or who may be affected by the Work;

2. all the Work and materials and equipment to be incorporated therein, whether in storage on or off the Site; and

3. other property at the Site or adjacent thereto, including trees, shrubs, lawns, walks, pavements, roadways, structures, other work in progress, utilities, and Underground Facilities not designated for removal, relocation, or replacement in the course of construction.

D. All damage, injury, or loss to any property referred to in Paragraph 7.13.C.2 or 7.13.C.3 caused, directly or indirectly, in whole or in part, by Contractor, any Subcontractor, Supplier, or any other individual or entity directly or indirectly employed by any of them to perform any of the Work, or anyone for whose acts any of them may be liable, shall be remedied by Contractor at its expense (except damage or loss attributable to the fault of Drawings or Specifications or to the acts or omissions of Owner or Engineer or anyone employed by any of them, or anyone for whose acts any of them may be liable, and not attributable, directly or indirectly, in whole or in part, to the fault or negligence of Contractor or any Subcontractor, Supplier, or other individual or entity directly or indirectly employed by any of them).

E. Contractor shall comply with all applicable Laws and Regulations relating to the safety of persons or property, or to the protection of persons or property from damage, injury, or loss; and shall erect and maintain all necessary safeguards for such safety and protection.

F. Contractor shall notify Owner; the owners of adjacent property; the owners of Underground Facilities and other utilities (if the identity of such owners is known to Contractor); and other contractors and utility owners performing work at or adjacent to the Site, in writing, when Contractor knows that prosecution of the Work may affect them, and shall cooperate with them in the protection, removal, relocation, and replacement of their property or work in progress.

G. Contractor shall comply with the applicable requirements of Owner's safety programs, if any. Any Owner's safety programs that are applicable to the Work are identified or included in the Supplementary Conditions or Specifications.

H. Contractor shall inform Owner and Engineer of the specific requirements of Contractor's safety program with which Owner's and Engineer's employees and representatives must comply while at the Site.

I. Contractor's duties and responsibilities for safety and protection will continue until all the Work is completed, Engineer has issued a written notice to Owner and Contractor in accordance with Paragraph 15.06.C that the Work is acceptable, and Contractor has left the Site (except as otherwise expressly provided in connection with Substantial Completion).

Copyright© 2018 National Society of Professional Engineers, American Council of Engineering Companies, and American Society of Civil Engineers. All rights reserved.

J. Contractor's duties and responsibilities for safety and protection will resume whenever Contractor or any Subcontractor or Supplier returns to the Site to fulfill warranty or correction obligations, or to conduct other tasks arising from the Contract Documents.

7.14 *Hazard Communication Programs*

A. Contractor shall be responsible for coordinating any exchange of safety data sheets (formerly known as material safety data sheets) or other hazard communication information required to be made available to or exchanged between or among employers at the Site in accordance with Laws or Regulations.

7.15 *Emergencies*

A. In emergencies affecting the safety or protection of persons or the Work or property at the Site or adjacent thereto, Contractor is obligated to act to prevent damage, injury, or loss. Contractor shall give Engineer prompt written notice if Contractor believes that any significant changes in the Work or variations from the Contract Documents have been caused by an emergency, or are required as a result of Contractor's response to an emergency. If Engineer determines that a change in the Contract Documents is required because of an emergency or Contractor's response, a Work Change Directive or Change Order will be issued.

7.16 *Submittals*

A. *Shop Drawing and Sample Requirements*

1. Before submitting a Shop Drawing or Sample, Contractor shall:

a. review and coordinate the Shop Drawing or Sample with other Shop Drawings and Samples and with the requirements of the Work and the Contract Documents;

b. determine and verify:

1) all field measurements, quantities, dimensions, specified performance and design criteria, installation requirements, materials, catalog numbers, and similar information with respect to the Submittal;

2) the suitability of all materials and equipment offered with respect to the indicated application, fabrication, shipping, handling, storage, assembly, and installation pertaining to the performance of the Work; and

3) all information relative to Contractor's responsibilities for means, methods, techniques, sequences, and procedures of construction, and safety precautions and programs incident thereto;

c. confirm that the Submittal is complete with respect to all related data included in the Submittal.

2. Each Shop Drawing or Sample must bear a stamp or specific written certification that Contractor has satisfied Contractor's obligations under the Contract Documents with respect to Contractor's review of that Submittal, and that Contractor approves the Submittal.

3. With each Shop Drawing or Sample, Contractor shall give Engineer specific written notice of any variations that the Submittal may have from the requirements of the Contract

Copyright© 2018 National Society of Professional Engineers, American Council of Engineering Companies, and American Society of Civil Engineers. All rights reserved.

Documents. This notice must be set forth in a written communication separate from the Submittal; and, in addition, in the case of a Shop Drawing by a specific notation made on the Shop Drawing itself.

B. *Submittal Procedures for Shop Drawings and Samples*: Contractor shall label and submit Shop Drawings and Samples to Engineer for review and approval in accordance with the accepted Schedule of Submittals.

1. *Shop Drawings*

a. Contractor shall submit the number of copies required in the Specifications.

b. Data shown on the Shop Drawings must be complete with respect to quantities, dimensions, specified performance and design criteria, materials, and similar data to show Engineer the services, materials, and equipment Contractor proposes to provide, and to enable Engineer to review the information for the limited purposes required by Paragraph 7.16.C.

2. *Samples*

a. Contractor shall submit the number of Samples required in the Specifications.

b. Contractor shall clearly identify each Sample as to material, Supplier, pertinent data such as catalog numbers, the use for which intended and other data as Engineer may require to enable Engineer to review the Submittal for the limited purposes required by Paragraph 7.16.C.

3. Where a Shop Drawing or Sample is required by the Contract Documents or the Schedule of Submittals, any related Work performed prior to Engineer's review and approval of the pertinent submittal will be at the sole expense and responsibility of Contractor.

C. *Engineer's Review of Shop Drawings and Samples*

1. Engineer will provide timely review of Shop Drawings and Samples in accordance with the accepted Schedule of Submittals. Engineer's review and approval will be only to determine if the items covered by the Submittals will, after installation or incorporation in the Work, comply with the requirements of the Contract Documents, and be compatible with the design concept of the completed Project as a functioning whole as indicated by the Contract Documents.

2. Engineer's review and approval will not extend to means, methods, techniques, sequences, or procedures of construction, or to safety precautions or programs incident thereto.

3. Engineer's review and approval of a separate item as such will not indicate approval of the assembly in which the item functions.

4. Engineer's review and approval of a Shop Drawing or Sample will not relieve Contractor from responsibility for any variation from the requirements of the Contract Documents unless Contractor has complied with the requirements of Paragraph 7.16.A.3 and Engineer has given written approval of each such variation by specific written notation thereof incorporated in or accompanying the Shop Drawing or Sample. Engineer will

Copyright© 2018 National Society of Professional Engineers, American Council of Engineering Companies, and American Society of Civil Engineers. All rights reserved.

document any such approved variation from the requirements of the Contract Documents in a Field Order or other appropriate Contract modification.

5. Engineer's review and approval of a Shop Drawing or Sample will not relieve Contractor from responsibility for complying with the requirements of Paragraphs 7.16.A and B.

6. Engineer's review and approval of a Shop Drawing or Sample, or of a variation from the requirements of the Contract Documents, will not, under any circumstances, change the Contract Times or Contract Price, unless such changes are included in a Change Order.

7. Neither Engineer's receipt, review, acceptance, or approval of a Shop Drawing or Sample will result in such item becoming a Contract Document.

8. Contractor shall perform the Work in compliance with the requirements and commitments set forth in approved Shop Drawings and Samples, subject to the provisions of Paragraph 7.16.C.4.

D. *Resubmittal Procedures for Shop Drawings and Samples*

1. Contractor shall make corrections required by Engineer and shall return the required number of corrected copies of Shop Drawings and submit, as required, new Samples for review and approval. Contractor shall direct specific attention in writing to revisions other than the corrections called for by Engineer on previous Submittals.

2. Contractor shall furnish required Shop Drawing and Sample submittals with sufficient information and accuracy to obtain required approval of an item with no more than two resubmittals. Engineer will record Engineer's time for reviewing a third or subsequent resubmittal of a Shop Drawing or Sample, and Contractor shall be responsible for Engineer's charges to Owner for such time. Owner may impose a set-off against payments due Contractor to secure reimbursement for such charges.

3. If Contractor requests a change of a previously approved Shop Drawing or Sample, Contractor shall be responsible for Engineer's charges to Owner for its review time, and Owner may impose a set-off against payments due Contractor to secure reimbursement for such charges, unless the need for such change is beyond the control of Contractor.

E. *Submittals Other than Shop Drawings, Samples, and Owner-Delegated Designs*

1. The following provisions apply to all Submittals other than Shop Drawings, Samples, and Owner-delegated designs:

   a. Contractor shall submit all such Submittals to the Engineer in accordance with the Schedule of Submittals and pursuant to the applicable terms of the Contract Documents.

   b. Engineer will provide timely review of all such Submittals in accordance with the Schedule of Submittals and return such Submittals with a notation of either Accepted or Not Accepted. Any such Submittal that is not returned within the time established in the Schedule of Submittals will be deemed accepted.

   c. Engineer's review will be only to determine if the Submittal is acceptable under the requirements of the Contract Documents as to general form and content of the Submittal.

Copyright© 2018 National Society of Professional Engineers, American Council of Engineering Companies, and American Society of Civil Engineers. All rights reserved.

d. If any such Submittal is not accepted, Contractor shall confer with Engineer regarding the reason for the non-acceptance, and resubmit an acceptable document.

2. Procedures for the submittal and acceptance of the Progress Schedule, the Schedule of Submittals, and the Schedule of Values are set forth in Paragraphs 2.03. 2.04, and 2.05.

F. Owner-delegated Designs: Submittals pursuant to Owner-delegated designs are governed by the provisions of Paragraph 7.19.

7.17 *Contractor's General Warranty and Guarantee*

A. Contractor warrants and guarantees to Owner that all Work will be in accordance with the Contract Documents and will not be defective. Engineer is entitled to rely on Contractor's warranty and guarantee.

B. Owner's rights under this warranty and guarantee are in addition to, and are not limited by, Owner's rights under the correction period provisions of Paragraph 15.08. The time in which Owner may enforce its warranty and guarantee rights under this Paragraph 7.17 is limited only by applicable Laws and Regulations restricting actions to enforce such rights; provided, however, that after the end of the correction period under Paragraph 15.08:

1. Owner shall give Contractor written notice of any defective Work within 60 days of the discovery that such Work is defective; and

2. Such notice will be deemed the start of an event giving rise to a Claim under Paragraph 12.01.B, such that any related Claim must be brought within 30 days of the notice.

C. Contractor's warranty and guarantee hereunder excludes defects or damage caused by:

1. abuse, or improper modification, maintenance, or operation, by persons other than Contractor, Subcontractors, Suppliers, or any other individual or entity for whom Contractor is responsible; or

2. normal wear and tear under normal usage.

D. Contractor's obligation to perform and complete the Work in accordance with the Contract Documents is absolute. None of the following will constitute an acceptance of Work that is not in accordance with the Contract Documents, a release of Contractor's obligation to perform the Work in accordance with the Contract Documents, or a release of Owner's warranty and guarantee rights under this Paragraph 7.17:

1. Observations by Engineer;

2. Recommendation by Engineer or payment by Owner of any progress or final payment;

3. The issuance of a certificate of Substantial Completion by Engineer or any payment related thereto by Owner;

4. Use or occupancy of the Work or any part thereof by Owner;

5. Any review and approval of a Shop Drawing or Sample submittal;

6. The issuance of a notice of acceptability by Engineer;

7. The end of the correction period established in Paragraph 15.08;

Copyright© 2018 National Society of Professional Engineers, American Council of Engineering Companies, and American Society of Civil Engineers. All rights reserved.

8. Any inspection, test, or approval by others; or

9. Any correction of defective Work by Owner.

E. If the Contract requires the Contractor to accept the assignment of a contract entered into by Owner, then the specific warranties, guarantees, and correction obligations contained in the assigned contract will govern with respect to Contractor's performance obligations to Owner for the Work described in the assigned contract.

7.18 *Indemnification*

A. To the fullest extent permitted by Laws and Regulations, and in addition to any other obligations of Contractor under the Contract or otherwise, Contractor shall indemnify and hold harmless Owner ~~and Engineer~~, and the Owner's officers, ~~directors, members, partners,~~ and employees, ~~agents, consultants and subcontractors of each and any of them,~~ from losses, damages, costs, and judgments (including but not limited to all reasonable fees and charges of engineers, architects, attorneys, and other professionals, and all court or arbitration or other dispute resolution costs) arising from third-party claims or actions relating to or resulting from the performance or furnishing of the Work, provided that any such claim, action, loss, cost, judgment or damage is attributable to bodily injury, sickness, disease, or death, or to damage to or destruction of tangible property (other than the Work itself), including the loss of use resulting therefrom, and caused in whole or in part by any act or omission of the Contractor, any Subcontractor, anyone directly or indirectly employed by any of them or anyone for whose acts any of them may be liable, regardless of whether or not it is caused in part by a party indemnified hereunder. Such obligation shall not be construed to negate, abridge or otherwise reduce any other right or obligation of indemnity which otherwise exists as to any party or person described in this subsection ~~but only to the extent caused by any negligent act or omission of Contractor, any Subcontractor, any Supplier, or any individual or entity directly or indirectly employed by any of them to perform any of the Work, or anyone for whose acts any of them may be liable~~.

B. ~~In any and all claims against Owner or Engineer, or any of their officers, directors, members, partners, employees, agents, consultants, or subcontractors, by any employee (or the survivor or personal representative of such employee) of Contractor, any Subcontractor, any Supplier, or any individual or entity directly or indirectly employed by any of them to perform any of the Work, or anyone for whose acts any of them may be liable, the indemnification obligation under Paragraph 7.18.A will not be limited in any way by any limitation on the amount or type of damages, compensation, or benefits payable by or for Contractor or any such Subcontractor, Supplier, or other individual or entity under workers' compensation acts, disability benefit acts, or other employee benefit acts.~~ The Contractor acknowledges the limit of dollar amount of Contractor's indemnity obligations required by the Contract specifically for those claims caused in whole or in part by the Owner or Engineer shall be $1,000,000 or the Contract Sum of the Project, whichever is more. The parties agree that the indemnity provided herein bears a reasonable commercial relationship to the Contract and is incorporated by this reference into the Project specifications and bid documents. if any.

C. Notwithstanding the above and without monetary limitation, the Contractor hereby indemnifies and holds harmless the Owner, their officers and employees, from liabilities, damages, losses and costs, including, but not limited to, reasonable attorney's fees, to the

Copyright© 2018 National Society of Professional Engineers, American Council of Engineering Companies, and American Society of Civil Engineers. All rights reserved.

extent caused by negligence, recklessness, or intentional wrongful misconduct of the Contractor and persons employed or utilized by the Contractor in the performance of the Contract.

D. Contractor agrees and understands that its obligation to indemnify, hold harmless, and defend as set forth in Paragraphs 7.18.A and B. above includes without limitation, claims, losses, etc., for personal injury, death, property damage, Hazardous Environmental Conditions, infringement of patent rights or copyrights incidental to the use or incorporation in the performance of the Work, etc., to the extent caused by the negligence, recklessness, or intentional misconduct of Contractor and the persons or entities employed or utilized by Contractor in the performance of the Contract.

7.19 *Delegation of Professional Design Services*

A. Owner may require Contractor to provide professional design services for a portion of the Work by express delegation in the Contract Documents. Such delegation will specify the performance and design criteria that such services must satisfy, and the Submittals that Contractor must furnish to Engineer with respect to the Owner-delegated design.

B. Contractor shall cause such Owner-delegated professional design services to be provided pursuant to the professional standard of care by a properly licensed design professional, whose signature and seal must appear on all drawings, calculations, specifications, certifications, and Submittals prepared by such design professional. Such design professional must issue all certifications of design required by Laws and Regulations.

C. If a Shop Drawing or other Submittal related to the Owner-delegated design is prepared by Contractor, a Subcontractor, or others for submittal to Engineer, then such Shop Drawing or other Submittal must bear the written approval of Contractor's design professional when submitted by Contractor to Engineer.

D. Owner and Engineer shall be entitled to rely upon the adequacy, accuracy, and completeness of the services, certifications, and approvals performed or provided by the design professionals retained or employed by Contractor under an Owner-delegated design, subject to the professional standard of care and the performance and design criteria stated in the Contract Documents.

E. Pursuant to this Paragraph 7.19, Engineer's review, approval, and other determinations regarding design drawings, calculations, specifications, certifications, and other Submittals furnished by Contractor pursuant to an Owner-delegated design will be only for the following limited purposes:

1. Checking for conformance with the requirements of this Paragraph 7.19;

2. Confirming that Contractor (through its design professionals) has used the performance and design criteria specified in the Contract Documents; and

3. Establishing that the design furnished by Contractor is consistent with the design concept expressed in the Contract Documents.

Copyright© 2018 National Society of Professional Engineers, American Council of Engineering Companies, and American Society of Civil Engineers. All rights reserved.

F. Contractor shall not be responsible for the adequacy of performance or design criteria specified by Owner or Engineer.

G. Contractor is not required to provide professional services in violation of applicable Laws and Regulations.

ARTICLE 8—OTHER WORK AT THE SITE

8.01 *Other Work*

A. In addition to and apart from the Work under the Contract Documents, the Owner may perform other work at or adjacent to the Site. Such other work may be performed by Owner's employees, or through contracts between the Owner and third parties. Owner may also arrange to have third-party utility owners perform work on their utilities and facilities at or adjacent to the Site.

B. If Owner performs other work at or adjacent to the Site with Owner's employees, or through contracts for such other work, then Owner shall give Contractor written notice thereof prior to starting any such other work. If Owner has advance information regarding the start of any third-party utility work that Owner has arranged to take place at or adjacent to the Site, Owner shall provide such information to Contractor.

C. Contractor shall afford proper and safe access to the Site to each contractor that performs such other work, each utility owner performing other work, and Owner, if Owner is performing other work with Owner's employees, and provide a reasonable opportunity for the introduction and storage of materials and equipment and the execution of such other work.

D. Contractor shall do all cutting, fitting, and patching of the Work that may be required to properly connect or otherwise make its several parts come together and properly integrate with such other work. Contractor shall not endanger any work of others by cutting, excavating, or otherwise altering such work; provided, however, that Contractor may cut or alter others' work with the written consent of Engineer and the others whose work will be affected.

E. If the proper execution or results of any part of Contractor's Work depends upon work performed by others, Contractor shall inspect such other work and promptly report to Engineer in writing any delays, defects, or deficiencies in such other work that render it unavailable or unsuitable for the proper execution and results of Contractor's Work. Contractor's failure to so report will constitute an acceptance of such other work as fit and proper for integration with Contractor's Work except for latent defects and deficiencies in such other work.

F. The provisions of this article are not applicable to work that is performed by third-party utilities or other third-party entities without a contract with Owner, or that is performed without having been arranged by Owner. If such work occurs, then any related delay, disruption, or interference incurred by Contractor is governed by the provisions of Paragraph 4.05.C.3.

Copyright© 2018 National Society of Professional Engineers, American Council of Engineering Companies, and American Society of Civil Engineers. All rights reserved.

8.02 *Coordination*

A. If Owner intends to contract with others for the performance of other work at or adjacent to the Site, to perform other work at or adjacent to the Site with Owner's employees, or to arrange to have utility owners perform work at or adjacent to the Site, the following will be set forth in the Supplementary Conditions or provided to Contractor prior to the start of any such other work:

1. The identity of the individual or entity that will have authority and responsibility for coordination of the activities among the various contractors;

2. An itemization of the specific matters to be covered by such authority and responsibility; and

3. The extent of such authority and responsibilities.

B. Unless otherwise provided in the Supplementary Conditions, Owner shall have sole authority and responsibility for such coordination.

8.03 *Legal Relationships*

A. If, in the course of performing other work for Owner at or adjacent to the Site, the Owner's employees, any other contractor working for Owner, or any utility owner that Owner has arranged to perform work, causes damage to the Work or to the property of Contractor or its Subcontractors, or delays, disrupts, interferes with, or increases the scope or cost of the performance of the Work, through actions or inaction, then Contractor shall be entitled to an equitable adjustment in the Contract Price or the Contract Times. Contractor must submit any Change Proposal seeking an equitable adjustment in the Contract Price or the Contract Times under this paragraph within 30 days of the damaging, delaying, disrupting, or interfering event. The entitlement to, and extent of, any such equitable adjustment will take into account information (if any) regarding such other work that was provided to Contractor in the Contract Documents prior to the submittal of the Bid or the final negotiation of the terms of the Contract, and any remedies available to Contractor under Laws or Regulations concerning utility action or inaction. When applicable, any such equitable adjustment in Contract Price will be conditioned on Contractor assigning to Owner all Contractor's rights against such other contractor or utility owner with respect to the damage, delay, disruption, or interference that is the subject of the adjustment. Contractor's entitlement to an adjustment of the Contract Times or Contract Price is subject to the provisions of Paragraphs 4.05.D and 4.05.E.

B. Contractor shall take reasonable and customary measures to avoid damaging, delaying, disrupting, or interfering with the work of Owner, any other contractor, or any utility owner performing other work at or adjacent to the Site.

1. If Contractor fails to take such measures and as a result damages, delays, disrupts, or interferes with the work of any such other contractor or utility owner, then Owner may impose a set-off against payments due Contractor, and assign to such other contractor or utility owner the Owner's contractual rights against Contractor with respect to the breach of the obligations set forth in this Paragraph 8.03.B.

2. When Owner is performing other work at or adjacent to the Site with Owner's employees, Contractor shall be liable to Owner for damage to such other work, and for the reasonable

Copyright© 2018 National Society of Professional Engineers, American Council of Engineering Companies, and American Society of Civil Engineers. All rights reserved.

direct delay, disruption, and interference costs incurred by Owner as a result of Contractor's failure to take reasonable and customary measures with respect to Owner's other work. In response to such damage, delay, disruption, or interference, Owner may impose a set-off against payments due Contractor.

C. If Contractor damages, delays, disrupts, or interferes with the work of any other contractor, or any utility owner performing other work at or adjacent to the Site, through Contractor's failure to take reasonable and customary measures to avoid such impacts, or if any claim arising out of Contractor's actions, inactions, or negligence in performance of the Work at or adjacent to the Site is made by any such other contractor or utility owner against Contractor, Owner, or Engineer, then Contractor shall (1) promptly attempt to settle the claim as to all parties through negotiations with such other contractor or utility owner, or otherwise resolve the claim by arbitration or other dispute resolution proceeding or at law, and (2) indemnify and hold harmless Owner and Engineer, and the officers, directors, members, partners, employees, agents, consultants and subcontractors of each and any of them from and against any such claims, and against all costs, losses, and damages (including but not limited to all fees and charges of engineers, architects, attorneys, and other professionals and all court or arbitration or other dispute resolution costs) arising out of or relating to such damage, delay, disruption, or interference.

ARTICLE 9—OWNER'S RESPONSIBILITIES

9.01 *Communications to Contractor*

A. Except as otherwise provided in these General Conditions, Owner shall issue all communications to Contractor through Engineer.

9.02 *Replacement of Engineer*

A. Owner may at its discretion appoint an engineer to replace Engineer, provided Contractor makes no reasonable objection to the replacement engineer. The replacement engineer's status under the Contract Documents will be that of the former Engineer.

9.03 *Furnish Data*

A. Owner shall promptly furnish the data required of Owner under the Contract Documents.

9.04 *Pay When Due*

A. Owner shall make payments to Contractor when they are due as provided in the Agreement.

9.05 *Lands and Easements; Reports, Tests, and Drawings*

A. Owner's duties with respect to providing lands and easements are set forth in Paragraph 5.01.

B. Owner's duties with respect to providing engineering surveys to establish reference points are set forth in Paragraph 4.03.

C. Article 5 refers to Owner's identifying and making available to Contractor copies of reports of explorations and tests of conditions at the Site, and drawings of physical conditions relating to existing surface or subsurface structures at the Site.

EJCDC® C-700, Standard General Conditions of the Construction Contract.
Copyright© 2018 National Society of Professional Engineers, American Council of Engineering Companies, and American Society of Civil Engineers. All rights reserved.

9.06 *Insurance*

A. Owner's responsibilities, if any, with respect to purchasing and maintaining liability and property insurance are set forth in Article 6.

9.07 *Change Orders*

A. Owner's responsibilities with respect to Change Orders are set forth in Article 11.

9.08 *Inspections, Tests, and Approvals*

A. Owner's responsibility with respect to certain inspections, tests, and approvals is set forth in Paragraph 14.02.B.

9.09 *Limitations on Owner's Responsibilities*

A. The Owner shall not supervise, direct, or have control or authority over, nor be responsible for, Contractor's means, methods, techniques, sequences, or procedures of construction, or the safety precautions and programs incident thereto, or for any failure of Contractor to comply with Laws and Regulations applicable to the performance of the Work. Owner will not be responsible for Contractor's failure to perform the Work in accordance with the Contract Documents.

9.10 *Undisclosed Hazardous Environmental Condition*

A. Owner's responsibility in respect to an undisclosed Hazardous Environmental Condition is set forth in Paragraph 5.06.

9.11 ~~*Evidence of Financial Arrangements*~~

A. ~~Upon request of Contractor, Owner shall furnish Contractor reasonable evidence that financial arrangements have been made to satisfy Owner's obligations under the Contract (including obligations under proposed changes in the Work).~~N/A

9.12 *Safety Programs*

A. While at the Site, Owner's employees and representatives shall comply with the specific applicable requirements of Contractor's safety programs of which Owner has been informed.

B. Owner shall furnish copies of any applicable Owner safety programs to Contractor.

ARTICLE 10—ENGINEER'S STATUS DURING CONSTRUCTION

10.01 *Owner's Representative*

A. Engineer will be Owner's representative during the construction period. The duties and responsibilities and the limitations of authority of Engineer as Owner's representative during construction are set forth in the Contract.

10.02 *Visits to Site*

A. Engineer will make visits to the Site at intervals appropriate to the various stages of construction as Engineer deems necessary in order to observe, as an experienced and qualified design professional, the progress that has been made and the quality of the various aspects of Contractor's executed Work. Based on information obtained during such visits and

EJCDC® C-700, Standard General Conditions of the Construction Contract.
Copyright© 2018 National Society of Professional Engineers, American Council of Engineering Companies, and American Society of Civil Engineers. All rights reserved.

observations, Engineer, for the benefit of Owner, will determine, in general, if the Work is proceeding in accordance with the Contract Documents. Engineer will not be required to make exhaustive or continuous inspections on the Site to check the quality or quantity of the Work. Engineer's efforts will be directed toward providing for Owner a greater degree of confidence that the completed Work will conform generally to the Contract Documents. On the basis of such visits and observations, Engineer will keep Owner informed of the progress of the Work and will endeavor to guard Owner against defective Work.

B. Engineer's visits and observations are subject to all the limitations on Engineer's authority and responsibility set forth in Paragraph 10.07. Particularly, but without limitation, during or as a result of Engineer's visits or observations of Contractor's Work, Engineer will not supervise, direct, control, or have authority over or be responsible for Contractor's means, methods, techniques, sequences, or procedures of construction, or the safety precautions and programs incident thereto, or for any failure of Contractor to comply with Laws and Regulations applicable to the performance of the Work.

10.03 *Resident Project Representative*

A. If Owner and Engineer have agreed that Engineer will furnish a Resident Project Representative to represent Engineer at the Site and assist Engineer in observing the progress and quality of the Work, then the authority and responsibilities of any such Resident Project Representative will be as provided in the Supplementary Conditions, and limitations on the responsibilities thereof will be as provided in the Supplementary Conditions and in Paragraph 10.07.

B. If Owner designates an individual or entity who is not Engineer's consultant, agent, or employee to represent Owner at the Site, then the responsibilities and authority of such individual or entity will be as provided in the Supplementary Conditions.

10.04 *Engineer's Authority*

A. Engineer has the authority to reject Work in accordance with Article 14.

B. Engineer's authority as to Submittals is set forth in Paragraph 7.16.

C. Engineer's authority as to design drawings, calculations, specifications, certifications and other Submittals from Contractor in response to Owner's delegation (if any) to Contractor of professional design services, is set forth in Paragraph 7.19.

D. Engineer's authority as to changes in the Work is set forth in Article 11.

E. Engineer's authority as to Applications for Payment is set forth in Article 15.

10.05 *Determinations for Unit Price Work*

A. Engineer will determine the actual quantities and classifications of Unit Price Work performed by Contractor as set forth in Paragraph 13.03.

10.06 *Decisions on Requirements of Contract Documents and Acceptability of Work*

A. Engineer will render decisions regarding the requirements of the Contract Documents, and judge the acceptability of the Work, pursuant to the specific procedures set forth herein for initial interpretations, Change Proposals, and acceptance of the Work. In rendering such

Copyright© 2018 National Society of Professional Engineers, American Council of Engineering Companies, and American Society of Civil Engineers. All rights reserved.

decisions and judgments, Engineer will not show partiality to Owner or Contractor, and will not be liable to Owner, Contractor, or others in connection with any proceedings, interpretations, decisions, or judgments conducted or rendered in good faith.

10.07 *Limitations on Engineer's Authority and Responsibilities*

A. Neither Engineer's authority or responsibility under this Article 10 or under any other provision of the Contract, nor any decision made by Engineer in good faith either to exercise or not exercise such authority or responsibility or the undertaking, exercise, or performance of any authority or responsibility by Engineer, will create, impose, or give rise to any duty in contract, tort, or otherwise owed by Engineer to Contractor, any Subcontractor, any Supplier, any other individual or entity, or to any surety for or employee or agent of any of them.

B. Engineer will not supervise, direct, control, or have authority over or be responsible for Contractor's means, methods, techniques, sequences, or procedures of construction, or the safety precautions and programs incident thereto, or for any failure of Contractor to comply with Laws and Regulations applicable to the performance of the Work. Engineer will not be responsible for Contractor's failure to perform the Work in accordance with the Contract Documents.

C. Engineer will not be responsible for the acts or omissions of Contractor or of any Subcontractor, any Supplier, or of any other individual or entity performing any of the Work.

D. Engineer's review of the final Application for Payment and accompanying documentation, and all maintenance and operating instructions, schedules, guarantees, bonds, certificates of inspection, tests and approvals, and other documentation required to be delivered by Contractor under Paragraph 15.06.A, will only be to determine generally that their content complies with the requirements of, and in the case of certificates of inspections, tests, and approvals, that the results certified indicate compliance with the Contract Documents.

E. The limitations upon authority and responsibility set forth in this Paragraph 10.07 also apply to the Resident Project Representative, if any.

10.08 *Compliance with Safety Program*

A. While at the Site, Engineer's employees and representatives will comply with the specific applicable requirements of Owner's and Contractor's safety programs of which Engineer has been informed.

ARTICLE 11—CHANGES TO THE CONTRACT

11.01 *Amending and Supplementing the Contract*

A. The Contract may be amended or supplemented by a Change Order, an Emergency Work Change Directive, or a Field Order.

B. If an amendment or supplement to the Contract includes a change in the Contract Price or the Contract Times, such amendment or supplement must be set forth in a Change Order.

C. All changes to the Contract that involve (1) the performance or acceptability of the Work, (2) the design (as set forth in the Drawings, Specifications, or otherwise), or (3) other engineering or technical matters, must be supported by Engineer's recommendation. Owner

EJCDC® C-700, Standard General Conditions of the Construction Contract.
Copyright© 2018 National Society of Professional Engineers, American Council of Engineering Companies, and American Society of Civil Engineers. All rights reserved.

and Contractor may amend other terms and conditions of the Contract without the recommendation of the Engineer.

11.02 *Change Orders*

A. Owner and Contractor shall execute appropriate Change Orders covering:

1. Changes in Contract Price or Contract Times which are agreed to by the parties, including any undisputed sum or amount of time for Work actually performed in accordance with an Emergency Work Change Directive;

2. Changes in Contract Price resulting from an Owner set-off, unless Contractor has duly contested such set-off;

3. Changes in the Work which are: (a) ordered by Owner pursuant to Paragraph 11.05, (b) required because of Owner's acceptance of defective Work under Paragraph 14.04 or Owner's correction of defective Work under Paragraph 14.07, or (c) agreed to by the parties, subject to the need for Engineer's recommendation if the change in the Work involves the design (as set forth in the Drawings, Specifications, or otherwise) or other engineering or technical matters; and

4. Changes that embody the substance of any final and binding results under: Paragraph 11.03.B, resolving the impact of an Emergency Work Change Directive; Paragraph 11.09, concerning Change Proposals; Article 12, Claims; Paragraph 13.02.D, final adjustments resulting from allowances; Paragraph 13.03.D, final adjustments relating to determination of quantities for Unit Price Work; and similar provisions.

B. If Owner or Contractor refuses to execute a Change Order that is required to be executed under the terms of Paragraph 11.02.A, it will be deemed to be of full force and effect, as if fully executed.

11.03 Emergency *Work Change Directives*

A. An Emergency Work Change Directive may only be used in emergency situations and will not change the Contract Price or the Contract Times but is evidence that the parties expect that the modification ~~ordered or~~ documented by an Emergency Work Change Directive will be incorporated in a subsequently issued Change Order, following negotiations by the parties as to the Emergency Work Change Directive's effect, if any, on the Contract Price and Contract Times; or, if negotiations are unsuccessful, by a determination under the terms of the Contract Documents governing adjustments, expressly including Paragraph 11.07 regarding change of Contract Price.

B. If Owner has issued a written Emergency Work Change Directive and:

1. Contractor believes that an adjustment in Contract Times or Contract Price is necessary, then Contractor shall submit any Change Proposal seeking such an adjustment no later than 30 days after the completion of the Work set out in the Work Change Directive.

2. Owner believes that an adjustment in Contract Times or Contract Price is necessary, then Owner shall submit ~~any Claim seeking such~~ a Change Order including an adjustment no later than 60 days after issuance of the Work Change Directive.

Copyright© 2018 National Society of Professional Engineers, American Council of Engineering Companies, and American Society of Civil Engineers. All rights reserved.

11.04 *Field Orders*

A. Engineer may authorize minor changes in the Work if the changes do not involve an adjustment in the Contract Price or the Contract Times and are compatible with the design concept of the completed Project as a functioning whole as indicated by the Contract Documents. Such changes will be accomplished by a Field Order and will be binding on Owner and also on Contractor, which shall perform the Work involved promptly.

B. If Contractor believes that a Field Order justifies an adjustment in the Contract Price or Contract Times, then before proceeding with the Work at issue, Contractor shall submit a Change Proposal as provided herein.

11.05 *Owner-Authorized Changes in the Work*

A. Without invalidating the Contract and without notice to any surety, Owner may, at any time or from time to time, order additions, deletions, or revisions in the Work. Changes involving the design (as set forth in the Drawings, Specifications, or otherwise) or other engineering or technical matters will be supported by Engineer's recommendation.

B. Such changes in the Work may be accomplished by a Change Order, if Owner and Contractor have agreed as to the effect, if any, of the changes on Contract Times or Contract Price; or by a Work Change Directive. Upon receipt of any such document, Contractor shall promptly proceed with the Work involved; or, in the case of a deletion in the Work, promptly cease construction activities with respect to such deleted Work. Added or revised Work must be performed under the applicable conditions of the Contract Documents.

C. Nothing in this Paragraph 11.05 obligates Contractor to undertake work that Contractor reasonably concludes cannot be performed in a manner consistent with Contractor's safety obligations under the Contract Documents or Laws and Regulations.

11.06 *Unauthorized Changes in the Work*

A. Contractor shall not be entitled to an increase in the Contract Price or an extension of the Contract Times with respect to any work performed that is not required by the Contract Documents, as amended, modified, or supplemented, except in the case of an emergency as provided in Paragraph 7.15 or in the case of uncovering Work as provided in Paragraph 14.05.C.2.

11.07 *Change of Contract Price*

A. The Contract Price may only be changed by a Change Order. Any Change Proposal for an adjustment in the Contract Price must comply with the provisions of Paragraph 11.09. Any Claim for an adjustment of Contract Price must comply with the provisions of Article 12.

B. An adjustment in the Contract Price will be determined as follows:

1. Where the Work involved is covered by unit prices contained in the Contract Documents, then by application of such unit prices to the quantities of the items involved (subject to the provisions of Paragraph 13.03);

2. Where the Work involved is not covered by unit prices contained in the Contract Documents, then by a mutually agreed lump sum (which may include an allowance for overhead and profit not necessarily in accordance with Paragraph 11.07.C.2); or

EJCDC® C-700, Standard General Conditions of the Construction Contract.
Copyright© 2018 National Society of Professional Engineers, American Council of Engineering Companies, and American Society of Civil Engineers. All rights reserved.

3. Where the Work involved is not covered by unit prices contained in the Contract Documents and the parties do not reach mutual agreement to a lump sum, then on the basis of the Cost of the Work (determined as provided in Paragraph 13.01) plus a Contractor's fee for overhead and profit (determined as provided in Paragraph 11.07.C).

C. *Contractor's Fee*: When applicable, the Contractor's fee for overhead and profit will be determined as follows:

1. A mutually acceptable fixed fee; or

2. If a fixed fee is not agreed upon, then a fee based on the following percentages of the various portions of the Cost of the Work:

a. For costs incurred under Paragraphs 13.01.B.1 and 13.01.B.2, the Contractor's fee will be 15 percent;

b. For costs incurred under Paragraph 13.01.B.3, the Contractor's fee will be 5 percent;

c. Where one or more tiers of subcontracts are on the basis of Cost of the Work plus a fee and no fixed fee is agreed upon, the intent of Paragraphs 11.07.C.2.a and 11.07.C.2.b is that the Contractor's fee will be based on: (1) a fee of 15 percent of the costs incurred under Paragraphs 13.01.B.1 and 13.01.B.2 by the Subcontractor that actually performs the Work, at whatever tier, and (2) with respect to Contractor itself and to any Subcontractors of a tier higher than that of the Subcontractor that actually performs the Work, a fee of 5 percent of the amount (fee plus underlying costs incurred) attributable to the next lower tier Subcontractor; provided, however, that for any such subcontracted Work the maximum total fee to be paid by Owner will be no greater than 27 percent of the costs incurred by the Subcontractor that actually performs the Work;

d. No fee will be payable on the basis of costs itemized under Paragraphs 13.01.B.4, 13.01.B.5, and 13.01.C;

e. The amount of credit to be allowed by Contractor to Owner for any change which results in a net decrease in Cost of the Work will be the amount of the actual net decrease in Cost of the Work and a deduction of an additional amount equal to 5 percent of such actual net decrease in Cost of the Work; and

f. When both additions and credits are involved in any one change or Change Proposal, the adjustment in Contractor's fee will be computed by determining the sum of the costs in each of the cost categories in Paragraph 13.01.B (specifically, payroll costs, Paragraph 13.01.B.1; incorporated materials and equipment costs, Paragraph 13.01.B.2; Subcontract costs, Paragraph 13.01.B.3; special consultants costs, Paragraph 13.01.B.4; and other costs, Paragraph 13.01.B.5) and applying to each such cost category sum the appropriate fee from Paragraphs 11.07.C.2.a through 11.07.C.2.e, inclusive.

11.08 *Change of Contract Times*

A. The Contract Times may only be changed by a Change Order. Any Change Proposal for an adjustment in the Contract Times must comply with the provisions of Paragraph 11.09. Any Claim for an adjustment in the Contract Times must comply with the provisions of Article 12.

Copyright© 2018 National Society of Professional Engineers, American Council of Engineering Companies, and American Society of Civil Engineers. All rights reserved.

B. Delay, disruption, and interference in the Work, and any related changes in Contract Times, are addressed in and governed by Paragraph 4.05.

11.09 *Change Proposals*

A. *Purpose and Content*: Contractor shall submit a Change Proposal to Engineer to request an adjustment in the Contract Times or Contract Price; contest an initial decision by Engineer concerning the requirements of the Contract Documents or relating to the acceptability of the Work under the Contract Documents; challenge a set-off against payment due; or seek other relief under the Contract. The Change Proposal will specify any proposed change in Contract Times or Contract Price, or other proposed relief, and explain the reason for the proposed change, with citations to any governing or applicable provisions of the Contract Documents. Each Change Proposal will address only one issue, or a set of closely related issues.

B. *Change Proposal Procedures*

1. *Submittal*: Contractor shall submit each Change Proposal to Engineer within 30 days after the start of the event giving rise thereto, or after such initial decision.

2. *Supporting Data*: The Contractor shall submit supporting data, including the proposed change in Contract Price or Contract Time (if any), to the Engineer and Owner within 15 days after the submittal of the Change Proposal.

   a. Change Proposals based on or related to delay, interruption, or interference must comply with the provisions of Paragraphs 4.05.D and 4.05.E.

   b. Change proposals related to a change of Contract Price must include full and detailed accounts of materials incorporated into the Work and labor and equipment used for the subject Work.

   The supporting data must be accompanied by a written statement that the supporting data are accurate and complete, and that any requested time or price adjustment is the entire adjustment to which Contractor believes it is entitled as a result of said event.

3. *Engineer's Initial Review*: Engineer will advise Owner regarding the Change Proposal, and consider any comments or response from Owner regarding the Change Proposal. If in its discretion Engineer concludes that additional supporting data is needed before conducting a full review and making a ~~decision~~ recommendation regarding the Change Proposal, then Engineer may request that Contractor submit such additional supporting data by a date specified by Engineer, prior to Engineer beginning its full review of the Change Proposal.

4. *Engineer's Full Review and ~~Action~~ Recommendation on the Change Proposal*: Upon receipt of Contractor's supporting data (including any additional data requested by Engineer), Engineer will conduct a full review of each Change Proposal and, within 30 days after such receipt of the Contractor's supporting data, either recommend ~~approve~~approval of the Change Proposal in whole, deny it in whole, or approve it in part and deny it in part. Such actions must be in writing, with a copy provided to Owner and Contractor. If Engineer does not take action on the Change Proposal within 30 days, then either Owner or Contractor may at any time thereafter submit a letter to the other party indicating that

Copyright© 2018 National Society of Professional Engineers, American Council of Engineering Companies, and American Society of Civil Engineers. All rights reserved.

as a result of Engineer's inaction the Change Proposal is deemed denied, thereby commencing the time for appeal of the denial under Article 12.

5. *Binding Decision*: Engineer's recommendation is sent to the Owner who shall render a final decision. The Owner's decision is final and binding upon ~~Owner and~~ Contractor, unless ~~Owner or~~ Contractor appeals the decision by filing a Claim under Article 12.

C. *Resolution of Certain Change Proposals*: If the Change Proposal does not involve the design (as set forth in the Drawings, Specifications, or otherwise), the acceptability of the Work, or other engineering or technical matters, then Engineer will notify the parties in writing that the Engineer is unable to resolve the Change Proposal. For purposes of further resolution of such a Change Proposal, such notice will be deemed a denial, and Contractor may choose to seek resolution under the terms of Article 12.

D. *Post-Completion*: Contractor shall not submit any Change Proposals after Engineer issues a written recommendation of final payment pursuant to Paragraph 15.06.B.

11.10 *Notification to Surety*

A. If the provisions of any bond require notice to be given to a surety of any change affecting the general scope of the Work or the provisions of the Contract Documents (including, but not limited to, Contract Price or Contract Times), the giving of any such notice will be Contractor's responsibility. The amount of each applicable bond will be adjusted to reflect the effect of any such change.

~~**ARTICLE 12—CLAIMS**~~

~~12.01 *Claims*~~

~~A. *Claims Process*: The following disputes between Owner and Contractor are subject to the Claims process set forth in this article:~~

~~1. Appeals by Owner or Contractor of Engineer's decisions regarding Change Proposals;~~

~~2. Owner demands for adjustments in the Contract Price or Contract Times, or other relief under the Contract Documents;~~

~~3. Disputes that Engineer has been unable to address because they do not involve the design (as set forth in the Drawings, Specifications, or otherwise), the acceptability of the Work, or other engineering or technical matters; and~~

~~4. Subject to the waiver provisions of Paragraph 15.07, any dispute arising after Engineer has issued a written recommendation of final payment pursuant to Paragraph 15.06.B.~~

~~B. *Submittal of Claim*: The party submitting a Claim shall deliver it directly to the other party to the Contract promptly (but in no event later than 30 days) after the start of the event giving rise thereto; in the case of appeals regarding Change Proposals within 30 days of the decision under appeal. The party submitting the Claim shall also furnish a copy to the Engineer, for its information only. The responsibility to substantiate a Claim rests with the party making the Claim. In the case of a Claim by Contractor seeking an increase in the Contract Times or Contract Price, Contractor shall certify that the Claim is made in good faith, that the supporting data are accurate and complete, and that to the best of Contractor's knowledge~~

Copyright© 2018 National Society of Professional Engineers, American Council of Engineering Companies, and American Society of Civil Engineers. All rights reserved.

and belief the amount of time or money requested accurately reflects the full amount to which Contractor is entitled.

C. *Review and Resolution*: The party receiving a Claim shall review it thoroughly, giving full consideration to its merits. The two parties shall seek to resolve the Claim through the exchange of information and direct negotiations. The parties may extend the time for resolving the Claim by mutual agreement. All actions taken on a Claim will be stated in writing and submitted to the other party, with a copy to Engineer.

D. *Mediation*

1. At any time after initiation of a Claim, Owner and Contractor may mutually agree to mediation of the underlying dispute. The agreement to mediate will stay the Claim submittal and response process.

2. If Owner and Contractor agree to mediation, then after 60 days from such agreement, either Owner or Contractor may unilaterally terminate the mediation process, and the Claim submittal and decision process will resume as of the date of the termination. If the mediation proceeds but is unsuccessful in resolving the dispute, the Claim submittal and decision process will resume as of the date of the conclusion of the mediation, as determined by the mediator.

3. Owner and Contractor shall each pay one-half of the mediator's fees and costs.

E. *Partial Approval*: If the party receiving a Claim approves the Claim in part and denies it in part, such action will be final and binding unless within 30 days of such action the other party invokes the procedure set forth in Article 17 for final resolution of disputes.

F. *Denial of Claim*: If efforts to resolve a Claim are not successful, the party receiving the Claim may deny it by giving written notice of denial to the other party. If the receiving party does not take action on the Claim within 90 days, then either Owner or Contractor may at any time thereafter submit a letter to the other party indicating that as a result of the inaction, the Claim is deemed denied, thereby commencing the time for appeal of the denial. A denial of the Claim will be final and binding unless within 30 days of the denial the other party invokes the procedure set forth in Article 17 for the final resolution of disputes.

G. *Final and Binding Results*: If the parties reach a mutual agreement regarding a Claim, whether through approval of the Claim, direct negotiations, mediation, or otherwise; or if a Claim is approved in part and denied in part, or denied in full, and such actions become final and binding; then the results of the agreement or action on the Claim will be incorporated in a Change Order or other written document to the extent they affect the Contract, including the Work, the Contract Times, or the Contract Price.

Copyright© 2018 National Society of Professional Engineers, American Council of Engineering Companies, and American Society of Civil Engineers. All rights reserved.

ARTICLE 13—COST OF THE WORK; ALLOWANCES; UNIT PRICE WORK

13.01 *Cost of the Work*

A. *Purposes for Determination of Cost of the Work*: The term Cost of the Work means the sum of all costs necessary for the proper performance of the Work at issue, as further defined below. The provisions of this Paragraph 13.01 are used for two distinct purposes:

1. To determine Cost of the Work when Cost of the Work is a component of the Contract Price, under cost-plus-fee, time-and-materials, or other cost-based terms; or

2. When needed to determine the value of a Change Order, Change Proposal, Claim, set-off, or other adjustment in Contract Price. When the value of any such adjustment is determined on the basis of Cost of the Work, Contractor is entitled only to those additional or incremental costs required because of the change in the Work or because of the event giving rise to the adjustment.

B. *Costs Included*: Except as otherwise may be agreed to in writing by Owner, costs included in the Cost of the Work will be in amounts no higher than those commonly incurred in the locality of the Project, will not include any of the costs itemized in Paragraph 13.01.C, and will include only the following items:

1. Payroll costs for employees in the direct employ of Contractor in the performance of the Work under schedules of job classifications agreed upon by Owner and Contractor in advance of the subject Work. Such employees include, without limitation, superintendents, foremen, safety managers, safety representatives, and other personnel employed full time on the Work. Payroll costs for employees not employed full time on the Work will be apportioned on the basis of their time spent on the Work. Payroll costs include, but are not limited to, salaries and wages plus the cost of fringe benefits, which include social security contributions, unemployment, excise, and payroll taxes, workers' compensation, health and retirement benefits, sick leave, and vacation and holiday pay applicable thereto. The expenses of performing Work outside of regular working hours, on Saturday, Sunday, or legal holidays, will be included in the above to the extent authorized by Owner.

2. Cost of all materials and equipment furnished and incorporated in the Work, including costs of transportation and storage thereof, and Suppliers' field services required in connection therewith. All cash discounts accrue to Contractor unless Owner deposits funds with Contractor with which to make payments, in which case the cash discounts will accrue to Owner. All trade discounts, rebates, and refunds and returns from sale of surplus materials and equipment will accrue to Owner, and Contractor shall make provisions so that they may be obtained.

3. Payments made by Contractor to Subcontractors for Work performed by Subcontractors. If required by Owner, Contractor shall obtain competitive bids from subcontractors acceptable to Owner and Contractor and shall deliver such bids to Owner, which will then determine, with the advice of Engineer, which bids, if any, will be acceptable. If any subcontract provides that the Subcontractor is to be paid on the basis of Cost of the Work plus a fee, the Subcontractor's Cost of the Work and fee will be determined in the same manner as Contractor's Cost of the Work and fee as provided in this Paragraph 13.01.

EJCDC® C-700, Standard General Conditions of the Construction Contract.
Copyright© 2018 National Society of Professional Engineers, American Council of Engineering Companies, and American Society of Civil Engineers. All rights reserved.

4. Costs of special consultants (including but not limited to engineers, architects, testing laboratories, and surveyors~~, attorneys, and accountants~~) employed or retained for services specifically related to the Work.

5. Other costs consisting of the following:

    a. The proportion of necessary transportation, travel, and subsistence expenses of Contractor's employees incurred in discharge of duties connected with the Work.

    b. Cost, including transportation and maintenance, of all materials, supplies, equipment, machinery, appliances, office, and temporary facilities at the Site, which are consumed in the performance of the Work, and cost, less market value, of such items used but not consumed which remain the property of Contractor.

        1) In establishing included costs for materials such as scaffolding, plating, or sheeting, consideration will be given to the actual or the estimated life of the material for use on other projects; or rental rates may be established on the basis of purchase or salvage value of such items, whichever is less. Contractor will not be eligible for compensation for such items in an amount that exceeds the purchase cost of such item.

    c. *Construction Equipment Rental*

        1) Rentals of all construction equipment and machinery, and the parts thereof, in accordance with rental agreements approved by Owner as to price (including any surcharge or special rates applicable to overtime use of the construction equipment or machinery), and the costs of transportation, loading, unloading, assembly, dismantling, and removal thereof. All such costs will be in accordance with the terms of said rental agreements. The rental of any such equipment, machinery, or parts must cease when the use thereof is no longer necessary for the Work.

        2) Costs for equipment and machinery owned by Contractor or a Contractor-related entity will be paid at a rate shown for such equipment in the equipment rental rate book specified in the Supplementary Conditions. An hourly rate will be computed by dividing the monthly rates by 176. These computed rates will include all operating costs.

        3) With respect to Work that is the result of a Change Order, Change Proposal, Claim, set-off, or other adjustment in Contract Price ("changed Work"), included costs will be based on the time the equipment or machinery is in use on the changed Work and the costs of transportation, loading, unloading, assembly, dismantling, and removal when directly attributable to the changed Work. The cost of any such equipment or machinery, or parts thereof, must cease to accrue when the use thereof is no longer necessary for the changed Work.

    d. Sales, consumer, use, and other similar taxes related to the Work, and for which Contractor is liable, as imposed by Laws and Regulations.

Copyright© 2018 National Society of Professional Engineers, American Council of Engineering Companies, and American Society of Civil Engineers. All rights reserved.

e. Deposits lost for causes other than negligence of Contractor, any Subcontractor, or anyone directly or indirectly employed by any of them or for whose acts any of them may be liable, and royalty payments and fees for permits and licenses.

f. Losses and damages (and related expenses) caused by damage to the Work, not compensated by insurance or otherwise, sustained by Contractor in connection with the performance of the Work (except losses and damages within the deductible amounts of builder's risk or other property insurance established in accordance with Paragraph 6.04), provided such losses and damages have resulted from causes other than the negligence of Contractor, any Subcontractor, or anyone directly or indirectly employed by any of them or for whose acts any of them may be liable. Such losses include settlements made with the written consent and approval of Owner. No such losses, damages, and expenses will be included in the Cost of the Work for the purpose of determining Contractor's fee.

g. The cost of utilities, fuel, and sanitary facilities at the Site.

h. Minor expenses such as communication service at the Site, express and courier services, and similar petty cash items in connection with the Work.

i. The costs of premiums for all bonds and insurance that Contractor is required by the Contract Documents to purchase and maintain.

C. *Costs Excluded*: The term Cost of the Work does not include any of the following items:

1. Payroll costs and other compensation of Contractor's officers, executives, principals, general managers, engineers, architects, estimators, attorneys, auditors, accountants, purchasing and contracting agents, expediters, timekeepers, clerks, and other personnel employed by Contractor, whether at the Site or in Contractor's principal or branch office for general administration of the Work and not specifically included in the agreed upon schedule of job classifications referred to in Paragraph 13.01.B.1 or specifically covered by Paragraph 13.01.B.4. The payroll costs and other compensation excluded here are to be considered administrative costs covered by the Contractor's fee.

2. The cost of purchasing, renting, or furnishing small tools and hand tools.

3. Expenses of Contractor's principal and branch offices other than Contractor's office at the Site.

4. Any part of Contractor's capital expenses, including interest on Contractor's capital employed for the Work and charges against Contractor for delinquent payments.

5. Costs due to the negligence, recklessness, or intentional misconduct of Contractor, any Subcontractor, or anyone directly or indirectly employed by any of them or for whose acts any of them may be liable, including but not limited to, the correction of defective Work, disposal of materials or equipment wrongly supplied, and making good any damage to property.

6. Expenses incurred in preparing and advancing Claims.

7. Other overhead or general expense costs of any kind and the costs of any item not specifically and expressly included in Paragraph 13.01.B.

Copyright© 2018 National Society of Professional Engineers, American Council of Engineering Companies, and American Society of Civil Engineers. All rights reserved.

D. *Contractor's Fee*

1. When the Work as a whole is performed on the basis of cost-plus-a-fee, then:

    a. Contractor's fee for the Work set forth in the Contract Documents as of the Effective Date of the Contract will be determined as set forth in the Agreement.

    b. for any Work covered by a Change Order, Change Proposal, Claim, set-off, or other adjustment in Contract Price on the basis of Cost of the Work, Contractor's fee will be determined as follows:

        1) When the fee for the Work as a whole is a percentage of the Cost of the Work, the fee will automatically adjust as the Cost of the Work changes.

        2) When the fee for the Work as a whole is a fixed fee, the fee for any additions or deletions will be determined in accordance with Paragraph 11.07.C.2.

2. When the Work as a whole is performed on the basis of a stipulated sum, or any other basis other than cost-plus-a-fee, then Contractor's fee for any Work covered by a Change Order, Change Proposal, Claim, set-off, or other adjustment in Contract Price on the basis of Cost of the Work will be determined in accordance with Paragraph 11.07.C.2.

E. *Documentation and Audit*: Whenever the Cost of the Work for any purpose is to be determined pursuant to this Article 13, Contractor and pertinent Subcontractors will establish and maintain records of the costs in accordance with generally accepted accounting practices. Subject to prior written notice, Owner will be afforded reasonable access, during normal business hours, to all Contractor's accounts, records, books, correspondence, instructions, drawings, receipts, vouchers, memoranda, and similar data relating to the Cost of the Work and Contractor's fee. Contractor shall preserve all such documents for a period of three years after the final payment by Owner. Pertinent Subcontractors will afford such access to Owner, and preserve such documents, to the same extent required of Contractor.

13.02 *Allowances*

A. It is understood that Contractor has included in the Contract Price all allowances so named in the Contract Documents and shall cause the Work so covered to be performed for such sums and by such persons or entities as may be acceptable to Owner and Engineer.

B. *Cash Allowances*: Contractor agrees that:

1. the cash allowances include the cost to Contractor (less any applicable trade discounts) of materials and equipment required by the allowances to be delivered at the Site, and all applicable taxes; and

2. Contractor's costs for unloading and handling on the Site, labor, installation, overhead, profit, and other expenses contemplated for the cash allowances have been included in the Contract Price and not in the allowances, and no demand for additional payment for any of the foregoing will be valid.

C. *Owner's Contingency Allowance*: Contractor agrees that an Owner's contingency allowance, if any, is for the sole use of Owner to cover unanticipated costs.

Copyright© 2018 National Society of Professional Engineers, American Council of Engineering Companies, and American Society of Civil Engineers. All rights reserved.

D. Prior to final payment, an appropriate Change Order will be issued as recommended by Engineer to reflect actual amounts due Contractor for Work covered by allowances, and the Contract Price will be correspondingly adjusted.

13.03 *Unit Price Work*

A. Where the Contract Documents provide that all or part of the Work is to be Unit Price Work, initially the Contract Price will be deemed to include for all Unit Price Work an amount equal to the sum of the unit price for each separately identified item of Unit Price Work times the estimated quantity of each item as indicated in the Agreement.

B. The estimated quantities of items of Unit Price Work are ~~not guaranteed~~estimates and are solely for the purpose of comparison of Bids and determining an initial Contract Price. Payments to Contractor for Unit Price Work will be based on actual quantities.

C. Each unit price shall be guaranteed and will be deemed to include an amount considered by Contractor to be adequate to cover Contractor's overhead and profit for each separately identified item.

D. Engineer will determine the actual quantities and classifications of Unit Price Work performed by Contractor. Engineer will review with Contractor the Engineer's preliminary determinations on such matters before rendering a written decision thereon (by recommendation of an Application for Payment or otherwise). Engineer's written decision thereon will be final and binding (except as modified by Engineer to reflect changed factual conditions or more accurate data) upon Owner and Contractor, and the final adjustment of Contract Price will be set forth in a Change Order, subject to the provisions of the following paragraph.

E. *Adjustments in Unit Price*

1. Contractor or Owner shall be entitled to an adjustment in the unit price with respect to an item of Unit Price Work if:

   a. the quantity of the item of Unit Price Work performed by Contractor differs materially and significantly from the estimated quantity of such item indicated in the Agreement; and

   b. Contractor's unit costs to perform the item of Unit Price Work have changed materially and significantly as a result of the quantity change.

2. The adjustment in unit price will account for and be coordinated with any related changes in quantities of other items of Work, and in Contractor's costs to perform such other Work, such that the resulting overall change in Contract Price is equitable to Owner and Contractor.

3. Adjusted unit prices will apply to all units of that item.

Copyright© 2018 National Society of Professional Engineers, American Council of Engineering Companies, and American Society of Civil Engineers. All rights reserved.

ARTICLE 14—TESTS AND INSPECTIONS; CORRECTION, REMOVAL, OR ACCEPTANCE OF DEFECTIVE WORK~~[OLD ARTICLE 13]~~

14.01 *Access to Work*

A. Owner, Engineer, their consultants and other representatives and personnel of Owner, independent testing laboratories, and authorities having jurisdiction have access to the Site and the Work at reasonable times for their observation, inspection, and testing. Contractor shall provide them proper and safe conditions for such access and advise them of Contractor's safety procedures and programs so that they may comply with such procedures and programs as applicable.

14.02 *Tests, Inspections, and Approvals*

A. Contractor shall give Engineer timely notice of readiness of the Work (or specific parts thereof) for all required inspections and tests, and shall cooperate with inspection and testing personnel to facilitate required inspections and tests.

B. Owner shall retain and pay for the services of an independent inspector, testing laboratory, or other qualified individual or entity to perform all inspections and tests expressly required by the Contract Documents to be furnished and paid for by Owner, except that costs incurred in connection with tests or inspections of covered Work will be governed by the provisions of Paragraph 14.05.

C. If Laws or Regulations of any public body having jurisdiction require any Work (or part thereof) specifically to be inspected, tested, or approved by an employee or other representative of such public body, Contractor shall assume full responsibility for arranging and obtaining such inspections, tests, or approvals, pay all costs in connection therewith, and furnish Engineer the required certificates of inspection or approval.

D. Contractor shall be responsible for arranging, obtaining, and paying for all inspections and tests required:

1. by the Contract Documents, unless the Contract Documents expressly allocate responsibility for a specific inspection or test to Owner;
2. to attain Owner's and Engineer's acceptance of materials or equipment to be incorporated in the Work;
3. by manufacturers of equipment furnished under the Contract Documents;
4. for testing, adjusting, and balancing of mechanical, electrical, and other equipment to be incorporated into the Work; and
5. for acceptance of materials, mix designs, or equipment submitted for approval prior to Contractor's purchase thereof for incorporation in the Work.

Such inspections and tests will be performed by independent inspectors, testing laboratories, or other qualified individuals or entities acceptable to Owner and Engineer.

E. If the Contract Documents require the Work (or part thereof) to be approved by Owner, Engineer, or another designated individual or entity, then Contractor shall assume full responsibility for arranging and obtaining such approvals.

Copyright© 2018 National Society of Professional Engineers, American Council of Engineering Companies, and American Society of Civil Engineers. All rights reserved.

F. If any Work (or the work of others) that is to be inspected, tested, or approved is covered by Contractor without written concurrence of Engineer, Contractor shall, if requested by Engineer, uncover such Work for observation. Such uncovering will be at Contractor's expense unless Contractor had given Engineer timely notice of Contractor's intention to cover the same and Engineer had not acted with reasonable promptness in response to such notice.

14.03 *Defective Work*

A. *Contractor's Obligation*: It is Contractor's obligation to assure that the Work is not defective.

B. *Engineer's Authority*: Engineer has the authority to determine whether Work is defective, and to reject defective Work.

C. *Notice of Defects*: Prompt written notice of all defective Work of which Owner or Engineer has actual knowledge will be given to Contractor.

D. *Correction, or Removal and Replacement*: Promptly after receipt of written notice of defective Work, Contractor shall correct all such defective Work, whether or not fabricated, installed, or completed, or, if Engineer has rejected the defective Work, remove it from the Project and replace it with Work that is not defective.

E. *Preservation of Warranties*: When correcting defective Work, Contractor shall take no action that would void or otherwise impair Owner's special warranty and guarantee, if any, on said Work.

F. *Costs and Damages*: In addition to its correction, removal, and replacement obligations with respect to defective Work, Contractor shall pay all claims, costs, losses, and damages arising out of or relating to defective Work, including but not limited to the cost of the inspection, testing, correction, removal, replacement, or reconstruction of such defective Work, fines levied against Owner by governmental authorities because the Work is defective, and the costs of repair or replacement of work of others resulting from defective Work. Prior to final payment, if Owner and Contractor are unable to agree as to the measure of such claims, costs, losses, and damages resulting from defective Work, then Owner may impose a reasonable set-off against payments due under Article 15.

14.04 *Acceptance of Defective Work*

A. If, instead of requiring correction or removal and replacement of defective Work, Owner prefers to accept it, Owner may do so (subject, if such acceptance occurs prior to final payment, to Engineer's confirmation that such acceptance is in general accord with the design intent and applicable engineering principles, and will not endanger public safety). Contractor shall pay all claims, costs, losses, and damages attributable to Owner's evaluation of and determination to accept such defective Work (such costs to be approved by Engineer as to reasonableness), and for the diminished value of the Work to the extent not otherwise paid by Contractor. If any such acceptance occurs prior to final payment, the necessary revisions in the Contract Documents with respect to the Work will be incorporated in a Change Order. If the parties are unable to agree as to the decrease in the Contract Price, reflecting the diminished value of Work so accepted, then Owner may impose a reasonable set-off against payments due under Article 15. If the acceptance of defective Work occurs after final payment, Contractor shall pay an appropriate amount to Owner.

Copyright© 2018 National Society of Professional Engineers, American Council of Engineering Companies, and American Society of Civil Engineers. All rights reserved.

B. Owner shall not be deemed to have accepted any defective work from Contractor that was not discovered by Engineer or Owner unless the defect was specifically detailed to Owner in writing by Contractor notifying Owner of the defective work and Owner notifies Contractor in writing that it will accept defective work (whether as-is, by receiving credit, or receiving other compensation, losses, or damage from Contractor as discussed above in Paragraph 14.04.A.) Contractor recognizes and understands that it shall not be relieved of responsibility or liability with performing defective work even if such defective work previously passed inspection by any inspector, including, without limitation, an inspector with the governing building department or a threshold inspector.

14.05 *Uncovering Work*

A. Engineer has the authority to require additional inspection or testing of the Work, whether or not the Work is fabricated, installed, or completed.

B. If any Work is covered contrary to the written request of Engineer, then Contractor shall, if requested by Engineer, uncover such Work for Engineer's observation, and then replace the covering, all at Contractor's expense.

C. If Engineer considers it necessary or advisable that covered Work be observed by Engineer or inspected or tested by others, then Contractor, at Engineer's request, shall uncover, expose, or otherwise make available for observation, inspection, or testing as Engineer may require, that portion of the Work in question, and provide all necessary labor, material, and equipment.

1. If it is found that the uncovered Work is defective, Contractor shall be responsible for all claims, costs, losses, and damages arising out of or relating to such uncovering, exposure, observation, inspection, and testing, and of satisfactory replacement or reconstruction (including but not limited to all costs of repair or replacement of work of others); and pending Contractor's full discharge of this responsibility the Owner shall be entitled to impose a reasonable set-off against payments due under Article 15.

2. If the uncovered Work is not found to be defective, Contractor shall be allowed an increase in the Contract Price or an extension of the Contract Times, directly attributable to such uncovering, exposure, observation, inspection, testing, replacement, and reconstruction. If the parties are unable to agree as to the amount or extent thereof, then Contractor may submit a Change Proposal within 30 days of the determination that the Work is not defective.

14.06 *Owner May Stop the Work*

A. If the Work is defective, or Contractor fails to supply sufficient skilled workers or suitable materials or equipment, or fails to perform the Work in such a way that the completed Work will conform to the Contract Documents, then Owner may order Contractor to stop the Work, or any portion thereof, until the cause for such order has been eliminated; however, this right of Owner to stop the Work will not give rise to any duty on the part of Owner to exercise this right for the benefit of Contractor, any Subcontractor, any Supplier, any other individual or entity, or any surety for, or employee or agent of any of them. The Owner shall incur no liability for delays occasioned by any stop-work order issued in accordance with this paragraph.

Copyright© 2018 National Society of Professional Engineers, American Council of Engineering Companies, and American Society of Civil Engineers. All rights reserved.

14.07 *Owner May Correct Defective Work*

A. If Contractor fails within a reasonable time after written notice from Engineer to correct defective Work, or to remove and replace defective Work as required by Engineer, then Owner may, after 7 days' written notice to Contractor, correct or remedy any such deficiency.

B. In exercising the rights and remedies under this Paragraph 14.07, Owner shall proceed expeditiously. In connection with such corrective or remedial action, Owner may exclude Contractor from all or part of the Site, take possession of all or part of the Work and suspend Contractor's services related thereto, and incorporate in the Work all materials and equipment stored at the Site or for which Owner has paid Contractor but which are stored elsewhere. Contractor shall allow Owner, Owner's representatives, agents and employees, Owner's other contractors, and Engineer and Engineer's consultants access to the Site to enable Owner to exercise the rights and remedies under this paragraph.

C. All claims, costs, losses, and damages incurred or sustained by Owner in exercising the rights and remedies under this Paragraph 14.07 will be charged against Contractor as set-offs against payments due under Article 15. Such claims, costs, losses and damages will include but not be limited to all costs of repair, or replacement of work of others destroyed or damaged by correction, removal, or replacement of Contractor's defective Work.

D. Contractor shall not be allowed an extension of the Contract Times because of any delay in the performance of the Work attributable to the exercise by Owner of Owner's rights and remedies under this Paragraph 14.07.

ARTICLE 15—PAYMENTS TO CONTRACTOR; SET-OFFS; COMPLETION; CORRECTION PERIOD

15.01 *Progress Payments*

A. *Basis for Progress Payments*: The Schedule of Values established as provided in Article 2 will serve as the basis for progress payments and will be incorporated into a form of Application for Payment acceptable to Engineer and Owner. Progress payments for Unit Price Work will be based on the number of units completed during the pay period, as determined under the provisions of Paragraph 13.03. Progress payments for cost-based Work will be based on Cost of the Work completed by Contractor during the pay period.

B. *Applications for Payments*

1. ~~At least 20 days before the date established in the Agreement for each progress payment (but not more often than once a month),~~ Contractor, on the 25th of each month, shall submit to Engineer for review an Application for Payment (in a form approved by Owner) filled out and signed by Contractor covering the Work completed as of the date of the Application and accompanied by such supporting documentation as is required by the Contract Documents.

2. If payment is requested on the basis of materials and equipment not incorporated in the Work but delivered and suitably stored at the Site or at another location agreed to in writing, the Application for Payment must also be accompanied by: (a) a bill of sale, invoice, copies of subcontract or purchase order payments, or other documentation establishing full payment by Contractor for the materials and equipment; (b) at Owner's

Copyright© 2018 National Society of Professional Engineers, American Council of Engineering Companies, and American Society of Civil Engineers. All rights reserved.

request, documentation warranting that Owner has received the materials and equipment free and clear of all Liens; and (c) evidence that the materials and equipment are covered by appropriate property insurance, a warehouse bond, or other arrangements to protect Owner's interest therein, all of which must be satisfactory to Owner.

3. Beginning with the second Application for Payment, each Application must include an affidavit of Contractor stating that all previous progress payments received by Contractor have been applied to discharge Contractor's legitimate obligations associated with prior Applications for Payment.

4. The amount of retainage with respect to progress payments will be as stipulated in the Agreement.

C. *Review of Applications*

1. Engineer will, within 10 days after ~~receipt of~~ each Application for Payment is stamped as received by Engineer, including each resubmittal, either indicate in writing a recommendation of payment and present the Application to Owner, or return the Application to Contractor ~~within 10 days after the date on the Application for Payment is stamped as received by Engineer~~ indicating in writing Engineer's reasons for refusing to recommend payment and the action necessary to make payment application proper. In the latter case, Contractor shall~~may~~ make the necessary corrections and resubmit the Application.

2. Engineer's recommendation of any payment requested in an Application for Payment will constitute a representation by Engineer to Owner, based on Engineer's observations of the executed Work as an experienced and qualified design professional, and on Engineer's review of the Application for Payment and the accompanying data and schedules, that to the best of Engineer's knowledge, information and belief:

   a. the Work has progressed to the point indicated;

   b. the quality of the Work is generally in accordance with the Contract Documents (subject to an evaluation of the Work as a functioning whole prior to or upon Substantial Completion, the results of any subsequent tests called for in the Contract Documents, a final determination of quantities and classifications for Unit Price Work under Paragraph 13.03, and any other qualifications stated in the recommendation); and

   c. the conditions precedent to Contractor's being entitled to such payment appear to have been fulfilled in so far as it is Engineer's responsibility to observe the Work.

3. By recommending any such payment Engineer will not thereby be deemed to have represented that:

   a. inspections made to check the quality or the quantity of the Work as it has been performed have been exhaustive, extended to every aspect of the Work in progress, or involved detailed inspections of the Work beyond the responsibilities specifically assigned to Engineer in the Contract; or

Copyright© 2018 National Society of Professional Engineers, American Council of Engineering Companies, and American Society of Civil Engineers. All rights reserved.

b. there may not be other matters or issues between the parties that might entitle Contractor to be paid additionally by Owner or entitle Owner to withhold payment to Contractor.

4. Neither Engineer's review of Contractor's Work for the purposes of recommending payments nor Engineer's recommendation of any payment, including final payment, will impose responsibility on Engineer:

   a. to supervise, direct, or control the Work;

   b. for the means, methods, techniques, sequences, or procedures of construction, or the safety precautions and programs incident thereto;

   c. for Contractor's failure to comply with Laws and Regulations applicable to Contractor's performance of the Work;

   d. to make any examination to ascertain how or for what purposes Contractor has used the money paid by Owner; or

   e. to determine that title to any of the Work, materials, or equipment has passed to Owner free and clear of any Liens.

5. Neither Engineer's review of Contractor's Work for purposes of recommending payments nor Engineer's recommendation of any payment shall relieve Contractor of responsibility or liability for defects in the Work.

6. Engineer may refuse to recommend the whole or any part of any payment if, in Engineer's opinion, it would be incorrect to make the representations to Owner stated in Paragraph 15.01.C.2.

6. Engineer will recommend reductions in payment (set-offs) necessary in Engineer's opinion to protect Owner from loss because:

   a. the Work is defective, requiring correction or replacement;

   b. the Contract Price has been reduced by Change Orders;

   c. Owner has been required to correct defective Work in accordance with Paragraph 14.07, or has accepted defective Work pursuant to Paragraph 14.04;

   d. Owner has been required to remove or remediate a Hazardous Environmental Condition for which Contractor is responsible; or

   e. Engineer has actual knowledge of the occurrence of any of the events that would constitute a default by Contractor and therefore justify termination for cause under the Contract Documents.

D. *Payment Becomes Due*

1. ~~Ten days a~~Subject to the provisions of Paragraph 15.01.E. and Section 218. 735, Florida Statutes, after presentation of the Application for Payment to Owner with Engineer's recommendation, the amount recommended (subject to any Owner set-offs) shall be paid by Owner in accordance with Section 218.735, Florida Statutes, within 25 business days after the date on which the payment application is stamped as received by Engineer ~~will become due, and when due will be paid by Owner to Contractor~~.

Copyright© 2018 National Society of Professional Engineers, American Council of Engineering Companies, and American Society of Civil Engineers. All rights reserved.

E. *Reductions in Payment by Owner*

1. In addition to any reductions in payment (set-offs) recommended by Engineer, Owner is entitled to impose a set-off against payment based on any of the following:

   a. Claims have been made against Owner based on Contractor's conduct in the performance or furnishing of the Work, or Owner has incurred costs, losses, or damages resulting from Contractor's conduct in the performance or furnishing of the Work, including but not limited to claims, costs, losses, or damages from workplace injuries, adjacent property damage, non-compliance with Laws and Regulations, and patent infringement;

   b. Contractor has failed to take reasonable and customary measures to avoid damage, delay, disruption, and interference with other work at or adjacent to the Site;

   c. Contractor has failed to provide and maintain required bonds or insurance;

   d. Owner has been required to remove or remediate a Hazardous Environmental Condition for which Contractor is responsible;

   e. Owner has incurred extra charges or engineering costs related to submittal reviews, evaluations of proposed substitutes, tests and inspections, or return visits to manufacturing or assembly facilities;

   f. The Work is defective, requiring correction or replacement;

   g. Owner has been required to correct defective Work in accordance with Paragraph 14.07, or has accepted defective Work pursuant to Paragraph 14.04;

   h. The Contract Price has been reduced by Change Orders;

   i. An event has occurred that would constitute a default by Contractor and therefore justify a termination for cause;

   j. Liquidated or other damages have accrued as a result of Contractor's failure to achieve Milestones, Substantial Completion, or final completion of the Work;

   k. Liens have been filed in connection with the Work, except where Contractor has delivered a specific bond satisfactory to Owner to secure the satisfaction and discharge of such Liens; or

   l. Other items entitle Owner to a set-off against the amount recommended.

2. If Owner imposes any set-off against payment, whether based on its own knowledge or on the written recommendations of Engineer, Owner will give Contractor immediate written notice (with a copy to Engineer) stating the reasons for such action and the specific amount of the reduction, and promptly pay Contractor any amount remaining after deduction of the amount so withheld. Owner shall promptly pay Contractor the amount so withheld, or any adjustment thereto agreed to by Owner and Contractor, if Contractor remedies the reasons for such action. The reduction imposed will be binding on Contractor unless it duly submits a Change Proposal contesting the reduction.

EJCDC® C-700, Standard General Conditions of the Construction Contract.
Copyright© 2018 National Society of Professional Engineers, American Council of Engineering Companies, and American Society of Civil Engineers. All rights reserved.

3. Upon a subsequent determination that Owner's refusal of payment was not justified, the amount wrongfully withheld will be treated as an amount due as determined by Paragraph 15.01.D.1 and subject to interest as provided in the Agreement.

15.02 *Contractor's Warranty of Title*

A. Contractor warrants and guarantees that title to all Work, materials, and equipment furnished under the Contract will pass to Owner free and clear of (1) all Liens and other title defects, and (2) all patent, licensing, copyright, or royalty obligations, no later than 7 days after the time of payment by Owner.

15.03 *Substantial Completion*

A. When Contractor considers the entire Work ready for its intended use Contractor shall notify Owner and Engineer in writing that the entire Work is substantially complete and request that Engineer issue a certificate of Substantial Completion. Contractor shall at the same time submit to Owner and Engineer an initial draft of Ppunch lList items to be completed or corrected before final payment. Substantial Completion cannot occur before the Project is issued a Certificate of Occupancy (or Completion, if applicable) by the governing building department that allows Owner is able to begin to utilize the entire ProjectWork for the purposes for which it was intended.

B. Promptly after Contractor's notification, Owner, Contractor, and Engineer shall make an inspection of the Work to determine the status of completion. If Engineer does not consider the Work substantially complete, Engineer will notify Contractor in writing giving the reasons therefor.

C. If Engineer considers the Work substantially complete, Engineer will deliver to Owner a preliminary certificate of Substantial Completion which will fix the date of Substantial Completion subject to Certificate of Occupancy (or Completion). Engineer shall attach to the certificate a pPunch lList of items to be completed or corrected before final payment. Owner shall have 7 days after receipt of the preliminary certificate during which to make written objection to Engineer as to any provisions of the certificate or attached Ppunch lList. If, after considering the objections to the provisions of the preliminary certificate, Engineer concludes that the Work is not substantially complete, Engineer will, within 14 days after submission of the preliminary certificate to Owner, notify Contractor in writing that the Work is not substantially complete, stating the reasons therefor. If Owner does not object to the provisions of the certificate, or if despite consideration of Owner's objections Engineer concludes that the Work is substantially complete, then Engineer will, within said 14 days, execute and deliver to Owner and Contractor a final certificate of Substantial Completion (with a revised pPunch lList of items to be completed or corrected) reflecting such changes from the preliminary certificate as Engineer believes justified after consideration of any objections from Owner.

D. At the time of receipt of the preliminary certificate of Substantial Completion, Owner and Contractor will confer regarding Owner's use or occupancy of the Work following Substantial Completion, review the builder's risk insurance policy with respect to the end of the builder's risk coverage, and confirm the transition to coverage of the Work under a permanent property insurance policy held by Owner. Unless Owner and Contractor agree otherwise in writing, Owner shall bear responsibility for security, operation, protection of the Work,

Copyright© 2018 National Society of Professional Engineers, American Council of Engineering Companies, and American Society of Civil Engineers. All rights reserved.

property insurance, maintenance, heat, and utilities upon Owner's use or occupancy of the Work.

E. After Substantial Completion the Contractor shall promptly begin work on the Ppunch Llist of items to be completed or corrected prior to final payment. In appropriate cases Contractor may submit monthly Applications for Payment for completed ppunch llist items, following the progress payment procedures set forth above.

F. Owner shall have the right to exclude Contractor from the Site after the date of Substantial Completion subject to allowing Contractor reasonable access to remove its property and complete or correct items on the Ppunch llist.

15.04 *Partial Use or Occupancy*

A. Prior to Substantial Completion of all the Work, Owner may use or occupy any substantially completed part of the Work which has specifically been identified in the Contract Documents, or which Owner, Engineer, and Contractor agree constitutes a separately functioning and usable part of the Work that can be used by Owner for its intended purpose without significant interference with Contractor's performance of the remainder of the Work, subject to the following conditions:

1. At any time, Owner may request in writing that Contractor permit Owner to use or occupy any such part of the Work that Owner believes to be substantially complete. If and when Contractor agrees that such part of the Work is substantially complete, Contractor, Owner, and Engineer will follow the procedures of Paragraph 15.03.A through 15.03.E for that part of the Work.

2. At any time, Contractor may notify Owner and Engineer in writing that Contractor considers any such part of the Work substantially complete and request Engineer to issue a certificate of Substantial Completion for that part of the Work.

3. Within a reasonable time after either such request, Owner, Contractor, and Engineer shall make an inspection of that part of the Work to determine its status of completion. If Engineer does not consider that part of the Work to be substantially complete, Engineer will notify Owner and Contractor in writing giving the reasons therefor. If Engineer considers that part of the Work to be substantially complete, the provisions of Paragraph 15.03 will apply with respect to certification of Substantial Completion of that part of the Work and the division of responsibility in respect thereof and access thereto.

4. No use or occupancy or separate operation of part of the Work may occur prior to compliance with the requirements of Paragraph 6.04 regarding builder's risk or other property insurance.

15.05 *Final Inspection – Punch List*

A. Upon written notice from Contractor that the entire Work or an agreed portion thereof is complete, Engineer will promptly make a final inspection with Owner and Contractor and will notify Contractor in writing of all particulars in which this inspection reveals that the Work, or agreed portion thereof, is incomplete or defective. Contractor shall immediately take such measures as are necessary to complete such Work or remedy such deficiencies.

Copyright© 2018 National Society of Professional Engineers, American Council of Engineering Companies, and American Society of Civil Engineers. All rights reserved.

15.06 *Final Payment*

A. *Application for Payment*

1. After Contractor has, in the opinion of Engineer, satisfactorily completed all corrections identified during the final inspection and has delivered, in accordance with the Contract Documents, all maintenance and operating instructions, schedules, guarantees, bonds, certificates or other evidence of insurance, certificates of inspection, annotated record documents (as provided in Paragraph 7.12), and other documents, Contractor may make application for final payment.

2. The final Application for Payment must be accompanied (except as previously delivered) by:

   a. all documentation called for in the Contract Documents, including but not limited to, the evidence that Contractor maintains completed operations coverage for its required commercial general liability (CGL) ~~insruance~~insurance;

   b. consent of the surety, if any, to final payment;

   c. satisfactory evidence that all title issues have been resolved such that title to all Work, materials, and equipment has passed to Owner free and clear of any Liens or other title defects, or will so pass upon final payment.

   d. a list of all duly pending Change Proposals and Claims; and

   e. complete and legally effective final releases or waivers (satisfactory to Owner) of all Lien rights ~~arising out of the Work,~~ and ~~of~~ Liens filed in connection with the Work.

3. In lieu of the final releases or waivers of Liens specified in Paragraph 15.06.A.2 and as approved by Owner, Contractor may furnish receipts or releases in full and an affidavit of Contractor whereby Contractor swears that: (a) ~~the releases and receipts include~~ all payrolls~~labor~~, services, material, and equipment bills and other indebtedness connected with the Work for which Owner has paid Contractor through the date of Contractor's final Application for Payment have been paid by Contractor ~~a Lien could be filed~~; and (b) all payrolls, material and equipment bills, and other indebtedness connected with the Work for which Owner will pay Contractor in the final Application for Payment will represent Contractor's receipt of all payments for the Work except for the specifically enumerated Claims (and Claims not specifically enumerated are deemed released and waived) and that Contractor will promptly pay its Subcontractors and Suppliers upon its receipt of the final payment. ~~might in any way be responsible, or which might in any way result in liens or other burdens on Owner's property, have been paid or otherwise satisfied.~~ If any Subcontractor or Supplier fails to furnish such a release or receipt in full, Contractor may furnish a bond or other collateral satisfactory to Owner to indemnify Owner against any Lien, or Owner at its option may issue joint checks payable to Contractor and specified Subcontractors and Suppliers.

4. The documents and materials that Contractor is required to submit to accompany its Final Application for Payment (as set forth in this Paragraph 15.06) are conditions precedent to issuance of final payment.

EJCDC® C-700, Standard General Conditions of the Construction Contract.
Copyright© 2018 National Society of Professional Engineers, American Council of Engineering Companies, and American Society of Civil Engineers. All rights reserved.

B. *Engineer's Review of Final Application and Recommendation of Payment*: If, on the basis of Engineer's observation of the Work during construction and final inspection, and Engineer's review of the final Application for Payment and accompanying documentation as required by the Contract Documents, Engineer is satisfied that the Work has been completed and Contractor's other obligations under the Contract have been fulfilled, Engineer will, within 10 days after receipt of the final Application for Payment, indicate in writing Engineer's recommendation of final payment and present the final Application for Payment to Owner for payment. Such recommendation will account for any set-offs against payment that are necessary in Engineer's opinion to protect Owner from loss for the reasons stated above with respect to progress payments. Otherwise, Engineer will return the Application for Payment to Contractor, indicating in writing the reasons for refusing to recommend final payment, in which case Contractor shall make the necessary corrections and resubmit the Application for Payment.

C. *Notice of Acceptability*: In support of its recommendation of payment of the final Application for Payment, Engineer will also give written notice to Owner and Contractor that the Work is acceptable, subject to stated limitations in the notice and to the provisions of Paragraph 15.07.

D. *Completion of Work*: The Work is complete (subject to surviving obligations) when it is ready for final payment as established by the Engineer's written recommendation of final payment and issuance of notice of the acceptability of the Work.

E. *Final Payment Becomes Due*: Upon receipt from Engineer of the final Application for Payment and accompanying documentation, Owner shall set off against the amount recommended by Engineer for final payment any further sum to which Owner is entitled, including but not limited to set-offs for liquidated damages and set-offs allowed under the provisions of this Contract with respect to progress payments. Owner shall pay the resulting balance due to Contractor within Twenty-five (25)~~30~~ days of the final Application for Payment being stamped as received by ~~Owner's receipt of the final Application for Payment from~~ Engineer.

15.07 *Waiver of Claims*

A. By making final payment, Owner waives its claim or right to liquidated damages or other damages for late completion by Contractor, except as set forth in an outstanding Claim, appeal under the provisions of Article 17, set-off, or express reservation of rights by Owner. Owner reserves all other claims or rights after final payment.

B. The acceptance of final payment by Contractor will constitute a waiver by Contractor of all claims and rights against Owner other than those pending matters that have been duly submitted as a Claim, or appealed under the provisions of Article 17.

15.08 *Correction Period*

A. If within one year after the date of Substantial Completion (or such longer period of time as may be prescribed by the Supplementary Conditions or the terms of any applicable special guarantee required by the Contract Documents), Owner gives Contractor written notice that any Work has been found to be defective, or that Contractor's repair of any damages to the Site or adjacent areas has been found to be defective, then after receipt of such notice of

Copyright© 2018 National Society of Professional Engineers, American Council of Engineering Companies, and American Society of Civil Engineers. All rights reserved.

defect Contractor shall promptly, without cost to Owner and in accordance with Owner's written instructions:

1. correct the defective repairs to the Site or such adjacent areas;
2. correct such defective Work;
3. remove the defective Work from the Project and replace it with Work that is not defective, if the defective Work has been rejected by Owner, and
4. satisfactorily correct or repair or remove and replace any damage to other Work, to the work of others, or to other land or areas resulting from the corrective measures.

B. Owner shall give any such notice of defect within 60 days of the discovery that such Work or repairs is defective. If such notice is given within such 60 days but after the end of the correction period, the notice will be deemed a notice of defective Work under Paragraph 7.17.B.

C. If, after receipt of a notice of defect within 60 days and within the correction period, Contractor does not promptly comply with the terms of Owner's written instructions, or in an emergency where delay would cause serious risk of loss or damage, Owner may have the defective Work corrected or repaired or may have the rejected Work removed and replaced. Contractor shall pay all costs, losses, and damages (including but not limited to all fees and charges of engineers, architects, attorneys, and other professionals and all court or arbitration or other dispute resolution costs) arising out of or relating to such correction or repair or such removal and replacement (including but not limited to all costs of repair or replacement of work of others). Contractor's failure to pay such costs, losses, and damages within 10 days of invoice from Owner will be deemed the start of an event giving rise to a Claim under Paragraph 12.01.B, such that any related Claim must be brought within 30 days of the failure to pay.

D. In special circumstances where a particular item of equipment is placed in continuous service before Substantial Completion of all the Work, the correction period for that item may start to run from an earlier date if so provided in the Specifications.

E. Where defective Work (and damage to other Work resulting therefrom) has been corrected or removed and replaced under this paragraph, the correction period hereunder with respect to such Work will be extended for an additional period of one year after such correction or removal and replacement has been satisfactorily completed.

F. Contractor's obligations under this paragraph are in addition to all other obligations and warranties. The provisions of this paragraph are not to be construed as a substitute for, or a waiver of, the provisions of any applicable statute of limitation or repose.

ARTICLE 16—SUSPENSION OF WORK AND TERMINATION

16.01 *Owner May Suspend Work*

A. At any time and without cause, Owner may suspend the Work or any portion thereof for a period of not more than 90 consecutive days by written notice to Contractor and Engineer. Such notice will fix the date on which Work will be resumed. Contractor shall resume the Work

EJCDC® C-700, Standard General Conditions of the Construction Contract.
Copyright© 2018 National Society of Professional Engineers, American Council of Engineering Companies, and American Society of Civil Engineers. All rights reserved.

on the date so fixed. Contractor shall be entitled to an adjustment in the Contract Price or an extension of the Contract Times directly attributable to any such suspension. Any Change Proposal seeking such adjustments must be submitted no later than 30 days after the date fixed for resumption of Work.

16.02 *Owner May Terminate for Cause*

A. The occurrence of any one or more of the following events will constitute a default by Contractor and justify termination for cause:

1. Contractor's persistent failure to perform the Work in accordance with the Contract Documents (including, but not limited to, failure to supply sufficient skilled workers or suitable materials or equipment, or failure to adhere to the Progress Schedule);

2. Failure of Contractor to perform or otherwise to comply with a material term of the Contract Documents;

3. Contractor's disregard of Laws or Regulations of any public body having jurisdiction; ~~or~~

4. Contractor's repeated disregard of the authority of Owner or Engineer~~.~~;

5. Contractor's failure to timely pay Subcontractors and Suppliers after it receives payment from Owner, or

6. Contractor's failure to obtain or maintain the insurance required of it in the Contract.

B. If one or more of the events identified in Paragraph 16.02.A occurs, then after giving Contractor (and any surety) ~~10~~ 5 days' written notice that Owner is considering a declaration that Contractor is in default and termination of the Contract, Owner may proceed to:

1. declare Contractor to be in default, and give Contractor (and any surety) written notice that the Contract is terminated; and

2. enforce the rights available to Owner under any applicable performance bond.

C. Subject to the terms and operation of any applicable performance bond, if Owner has terminated the Contract for cause, Owner may exclude Contractor from the Site, take possession of the Work, incorporate in the Work all materials and equipment stored at the Site or for which Owner has paid Contractor but which are stored elsewhere, and complete the Work as Owner may deem expedient.

D. Owner may not proceed with termination of the Contract under Paragraph 16.02.B if Contractor within ~~7~~ 5 days of receipt of notice of intent to terminate begins to correct its failure to perform and proceeds diligently to cure such failure.

E. If Owner proceeds as provided in Paragraph 16.02.B, Contractor shall not be entitled to receive any further payment until the Work is completed. If the unpaid balance of the Contract Price exceeds the cost to complete the Work, including all related claims, costs, losses, and damages (including but not limited to all fees and charges of engineers, architects, attorneys, and other professionals) sustained by Owner, such excess will be paid to Contractor. If the cost to complete the Work including such related claims, costs, losses, and damages exceeds such unpaid balance, Contractor shall pay the difference to Owner. ~~Such claims, costs, losses, and damages incurred by Owner will be reviewed by Engineer as to their~~

EJCDC® C-700, Standard General Conditions of the Construction Contract.
Copyright© 2018 National Society of Professional Engineers, American Council of Engineering Companies, and American Society of Civil Engineers. All rights reserved.

~~reasonableness and, when so approved by Engineer, incorporated in a Change Order.~~ When exercising any rights or remedies under this paragraph, Owner shall not be required to obtain the lowest price for the Work performed.

F. Where Contractor's services have been so terminated by Owner, the termination will not affect any rights or remedies of Owner against Contractor then existing or which may thereafter accrue, or any rights or remedies of Owner against Contractor or any surety under any payment bond or performance bond. Any retention or payment of money due Contractor by Owner will not release Contractor from liability.

G. If and to the extent that Contractor has provided a performance bond under the provisions of Paragraph 6.01.A, the provisions of that bond will govern over any inconsistent provisions of Paragraphs 16.02.B and 16.02.D.

16.03 *Owner May Terminate for Convenience*

A. Upon ~~7~~ 5 days' written notice to Contractor and Engineer, Owner may, without cause and without prejudice to any other right or remedy of Owner, terminate the Contract. In such case, Contractor shall be paid for (without duplication of any items):

1. completed and acceptable Work executed in accordance with the Contract Documents prior to the effective date of termination, including fair and reasonable sums for overhead and profit on such Work;

2. expenses sustained prior to the effective date of termination in performing services and furnishing labor, materials, or equipment as required by the Contract Documents in connection with uncompleted Work, plus fair and reasonable sums for overhead and profit on such expenses; and

3. other reasonable expenses directly attributable to termination, such as demobilization expenses, and including costs incurred to prepare a termination for convenience cost proposal. Attorneys' fees, accountant fees, home office overhead and similar expenses shall not be deemed reasonable expenses.

B. Contractor shall not be paid for any loss of anticipated profits or revenue, post-termination overhead costs, or other economic loss arising out of or resulting from such termination.

16.04 *Contractor May Stop Work or Terminate*

A. If, through no act or fault of Contractor, (1) the Work is suspended for more than 90 consecutive days by Owner or under an order of court or other public authority, or (2) Engineer fails to act on any Application for Payment within 30 days after it is submitted, or (3) Owner fails for 30 days to pay Contractor any sum finally determined to be due, then Contractor may, upon 7 days' written notice to Owner and Engineer, and provided Owner or Engineer do not remedy such suspension or failure within that time, terminate the contract and recover from Owner payment on the same terms as provided in Paragraph 16.03. Contractor, however, cannot terminate the Contract due to any dispute (i) concerning the amount of payment due Contractor or (ii) any amounts Owner is withholding from Contractor.

B. In lieu of terminating the Contract and without prejudice to any other right or remedy, if Engineer has failed to act on an Application for Payment within 30 days after it is submitted, or Owner has failed for 30 days to pay Contractor any sum finally determined to be due,

Copyright© 2018 National Society of Professional Engineers, American Council of Engineering Companies, and American Society of Civil Engineers. All rights reserved.

Contractor may, 7 days after written notice to Owner and Engineer, stop the Work until payment is made of all such amounts due Contractor, including interest thereon. The provisions of this paragraph are not intended to preclude Contractor from submitting a Change Proposal for an adjustment in Contract Price or Contract Times or otherwise for expenses or damage directly attributable to Contractor's stopping the Work as permitted by this paragraph. Contractor, however, cannot stop the Work due to any dispute (i) concerning the amount of payment due Contractor or (ii) any amounts Owner is withholding from Contractor.

ARTICLE 17—FINAL RESOLUTION OF DISPUTES

17.01 ~~*Methods and Procedures*~~

~~*A. Disputes Subject to Final Resolution: The following disputed matters are subject to final resolution under the provisions of this article:*~~

~~*1. A timely appeal of an approval in part and denial in part of a Claim, or of a denial in full, pursuant to Article 12; and*~~

~~*2. Disputes between Owner and Contractor concerning the Work, or obligations under the Contract Documents, that arise after final payment has been made.*~~

~~*B. Final Resolution of Disputes: For any dispute subject to resolution under this article, Owner or Contractor may:*~~

~~*1. elect in writing to invoke the dispute resolution process provided for in the Supplementary Conditions;*~~

~~*2. agree with the other party to submit the dispute to another dispute resolution process; or*~~

~~*3. if no dispute resolution process is provided for in the Supplementary Conditions or mutually agreed to, give written notice to the other party of the intent to submit the dispute to a court of competent jurisdiction.*~~

1. Claims, disputes or other matters in question between the parties to this Agreement shall be first subject to pre-suit mediation prior to the filing of any legal claims or litigation. Completion of pre-suit mediation is a condition precedent to litigation. The obligation to mediate is a material and essential provision of the Agreement.

2. Unless otherwise agreed in writing, the Contractor shall carry on the Work and maintain its progress during any mediation or litigation, and the Owner shall continue to make payments to the Contractor in accordance with the Contract Documents.

3. Either party may initiate a mediation preceding by a request in writing to the other party within a reasonable time after the claim, dispute or other matter in question has arisen or as provided in subparagraph ___, but in no event after the expiration of the applicable statute of limitations.

4. The parties shall endeavor in good faith to mutually agree upon an acceptable mediator. In the event the parties have not agreed upon a mediator within thirty (30) days of the request for

Copyright© 2018 National Society of Professional Engineers, American Council of Engineering Companies, and American Society of Civil Engineers. All rights reserved.

mediation, the Orlando office of the American Arbitration Association, upon the written request of either party, shall appoint a mediator from its pool of approved mediators.

5. *Unless otherwise mutually agreed, the mediation shall be held in accordance with the Construction Industry Mediation Rules of the American Arbitration Association currently in effect, each party to bear its own fees, costs and expenses.*

6. *In the event that pre-suit mediation is unsuccessful, all claims, disputes or other matters in question shall be resolved in the Circuit Courts of Volusia County Florida. The Parties, including the Contractor's Surety, waive Venue and Jurisdiction of any Federal Court and expressly waive Trial by Jury.*

ARTICLE 18—MISCELLANEOUS

18.01 *Giving Notice*

A. Whenever any provision of the Contract requires the giving of written notice to Owner, Engineer, or Contractor, it will be deemed to have been validly given only if delivered:

1. in person, by a commercial courier service or otherwise, to the recipient's place of business;

2. by registered or certified mail, postage prepaid, to the recipient's place of business; or

3. by e-mail to the recipient, with the words "Formal Notice" or similar in the e-mail's subject line.

18.02 *Computation of Times*

A. When any period of time is referred to in the Contract by days, it will be computed to exclude the first and include the last day of such period. If the last day of any such period falls on a Saturday or Sunday or on a day made a legal holiday by the law of the applicable jurisdiction, such day will be omitted from the computation.

18.03 *Cumulative Remedies*

A. The duties and obligations imposed by these General Conditions and the rights and remedies available hereunder to the parties hereto are in addition to, and are not to be construed in any way as a limitation of, any rights and remedies available to any or all of them which are otherwise imposed or available by Laws or Regulations, by special warranty or guarantee, or by other provisions of the Contract. The provisions of this paragraph will be as effective as if repeated specifically in the Contract Documents in connection with each particular duty, obligation, right, and remedy to which they apply.

18.04 *Limitation of Damages*

A. With respect to any and all Change Proposals, Claims, disputes subject to final resolution, and other matters at issue, neither Owner nor Engineer, nor any of their officers, directors, members, partners, employees, agents, consultants, or subcontractors, shall be liable to Contractor for any claims, costs, losses, or damages sustained by Contractor on or in connection with any other project or anticipated project.

EJCDC® C-700, Standard General Conditions of the Construction Contract.
Copyright© 2018 National Society of Professional Engineers, American Council of Engineering Companies, and American Society of Civil Engineers. All rights reserved.

18.05 *No Waiver*

A. A party's non-enforcement of any provision will not constitute a waiver of that provision, nor will it affect the enforceability of that provision or of the remainder of this Contract.

18.06 *Survival of Obligations*

A. All representations, indemnifications, warranties, and guarantees made in, required by, or given in accordance with the Contract, as well as all continuing obligations indicated in the Contract, will survive final payment, completion, and acceptance of the Work or termination of the Contract or of the services of Contractor.

18.07 *Controlling Law*

A. This Contract is to be governed by the law of the Sstate of Floridain which the Project is located.

18.08 *Assignment of Contract*

A. Unless expressly agreed to elsewhere in the Contract, no assignment by a party to this Contract of any rights under or interests in the Contract will be binding on the other party without the written consent of the party sought to be bound; and, specifically but without limitation, money that may become due and money that is due may not be assigned without such consent (except to the extent that the effect of this restriction may be limited by law), and unless specifically stated to the contrary in any written consent to an assignment, no assignment will release or discharge the assignor from any duty or responsibility under the Contract.

18.09 *Successors and Assigns*

A. Owner and Contractor each binds itself, its successors, assigns, and legal representatives to the other party hereto, its successors, assigns, and legal representatives in respect to all covenants, agreements, and obligations contained in the Contract Documents.

18.10 *Headings*

A. Article and paragraph headings are inserted for convenience only and do not constitute parts of these General Conditions.

EJCDC® C-700, Standard General Conditions of the Construction Contract.
Copyright© 2018 National Society of Professional Engineers, American Council of Engineering Companies, and American Society of Civil Engineers. All rights reserved.

End of Solicitation Documents

(ATTACHMENT 1) SCHEDULE OF UNIT PRICING

ITB #25-01

LOWES/GATEWAY LIFT STATION (LS82) REHABILITATION

Name of Business:	
Contact Person:	
Email Address:	
Authorized Signature:	

ALL UNIT PRICING IN ACCORDANCE WITH SECTION 3 - SCOPE OF WORK

Bidder must fill in each cell highlighted in GREEN, leaving no blank cells; return completed, signed form with bid submittal and include on USB/thumb drive.

ITEM #	DESCRIPTION	UNIT OF MEASURE	ESTIMATED QUANTITY	UNIT PRICE	EXTENDED PRICE
1	Mobilization/Demobilization	LS	1	$	$
2	Insurance, Performance and Payment Bond	LS	1	$	$
3	Preconstruction Video	LS	1	$	$
4	Construction Restoration - (site cleanup, seed and mulch)	LS	1	$	$
5	Lift Station Demolition, including but not limited to: - 2 suction lift pumps - Well top and internal piping - Lift Station discharge piping to existing plug valve - Sandblast concrete lift station interior - Electrical and associated conduit/piping	LS	1	$	$
6	Site Work (clearing and grubbing, grading, erosion control)	LS	1	$	$
7	Construction Testing (Pressure, Density Testing, etc.)	LS	1	$	$
8	Survey Layout & Record Drawings	LS	1	$	$
9	FDOT #57 Stone	CY	5	$	$
10	6" Concrete Pad and Driveway	CY	12	$	$
11	Lift Station Improvements, including but not limited to: - Liner - Replace lift station top and hatch - Replace interior suction piping, rails, etc. - Reduce Concrete fillet at bottom of well	LS	1	$	$
12	Submersible Pump (Including base elbows, anchor bolts, guide rail systems, access hatch, and startup)	EA	2	$	$
13	6-in Above Ground Valve Assembly (Piping, Fittings, Valves, etc.)	LS	1	$	$
14	6-in PVC Force Main (Including Fittings, Restraints, Adapters, etc.)	LS	30	$	$
15	6-in HDPE Force Main - Bypass Piping (Including Fittings, Restraints, Adapters, Camlocks, etc.)	LF	105	$	$
16	6-in Plug Valve	EA	2	$	$
17	Connection to Existing 8-in Force Main	EA	1	$	$
18	Hose Bibb Relocation	EA	1	$	$
19	Reclaim Piping Relocation	EA	1	$	$
20	Bypass Operations	LS	1	$	$
21	6-ft Viny-Coated Chain-link Fence	LF	125	$	$
22	Electrical I&C	LS	1	$	$
23	Permitting	LS	1	$80,000.00	$80,000.00
	LEGEND:			FINAL PRICE	$
	LS - LUMP SUM EA - EACH LF - LINEAR FEET CY - CUBIC YARD				

100% TECHNICAL SPECIFICATIONS AND CONTRACT DOCUMENTS

FOR

LOWES/GATEWAY STATION REHABILITATION

October 2024

Prepared By:

Kimley Horn and Associates
1530 Cornerstone Blvd, Building 1, Suite 200A
Daytona Beach, FL 32117
386-271-0282

Nicole E. McConnell, P.E.
Registered Engineer No. 73789
State of Florida

Bid No. B-X-XX-XX
Owner Project No. _____
Engineer Project No. 049204106

TABLE OF CONTENTS

BIDDING REQUIREMENTS, CONTRACT FORMS, AND CONDITIONS OF THE CONTRACT

DIVISON 00 PROJECT MANUAL

DIVISION 1 GENERAL REQUIREMENT

01000 GENERAL REQUIREMENTS
01025 MEASUREMENT AND PAYMENT
01027 PERIODIC PAY ESTIMATES
01030 SPECIAL PROJECT PROCEDURES
01041 PROJECT COORDINATION
01050 FIELD ENGINEERING AND SURVEYING
01065 PERMITS AND FEES
01090 REFERENCE STANDARDS
01200 PROJECT MEETINGS
01310 CONSTRUCTION SCHEDULE
01340 SHOP DRAWINGS
01370 SCHEDULE OF VALUES
01450 QUALITY CONTROL
01530 PROTECTION OF EXISTING FACILITIES
01545 CUTTING AND PATCHING
01600 MATERIAL AND EQUIPMENT
01700 CONTRACT CLOSEOUT
01710 CLEANING
01720 PROJECT DOCUMENTS
01730 OPERATING AND MAINTENANCE DATA
01740 WARRANTIES AND BONDS
01850 COLOR AUDIO-VIDEO PRECONSTRUCTION RECORD
01900 SEQUENCE OF CONSTRUCTION

DIVISION 2 SITE CONSTRUCTION

02015 EQUIPMENT, PIPING, AND MATERIALS DEMOLITION
02100 CLEARING AND GRUBBING
02240 DEWATERING
02534 RECLAIMED WATER DISTRIBUTION PIPING
02535 SANITARY SEWER FORCE MAIN SYSTEMS
02665 PIPE INSTALLATION
02667 CONNECTIONS TO EXISTING BURIED PIPELINES
02684 PRESSURE TESTING OF PIPING
02951 RESTORATION

DIVISION 3 CONCRETE

03103 FORMWORK, REINFORCING, AND CONCRETE
03600 GROUTING

DIVISION 9 FINISHES

09811 FUSION-BONDED EPOXY LININGS AND COATINGS

DIVISION 13 PROCESS INSTRUMENTATION AND CONTROL SYSTEM

13300 GENERAL REQUIREMENTS
13310 FIELD INSTRUMENTS
13315 LIFT STATION CONTROL PANEL
13330 RTU

DIVISION 15 MECHANICAL

15075 CONNECTIONS BETWEEN DISSIMILAR MATERIALS
15100 VALVES AND OPERATORS
15905 SUBMERSIBLE PUMPS

DIVISION 16 ELECTRICAL

16050 ELECTRICAL GENERAL PROVISIONS
16108 MISCELLANEOUS EQUIPMENT
16110 RACEWAYS AND FITTINGS
16120 WIRES AND CABLES
16450 GROUNDING SYSTEM

APPENDIX A FDEP DOMESTIC WASTEWATER COLLECTION SYSTEM PERMIT – LOWES/GATEWAY – *PENDING*

SECTION 01000

GENERAL REQUIREMENTS

PART 1 - GENERAL

1.01 SCOPE AND INTENT

A. This project consists of the rehabilitation of the Lowes/Gateway Lift Station. The existing dry pit pumps will be replaced with two submersible pumps, concrete pads and driveway will be poured, bypass piping will be installed, gravel will be laid down around lift station, and fencing will be constructed. Sod replacement, including concrete, soil, and gravel replacement in kind will be required at all disturbed areas.

B. Work Included:

1. The Contractor shall furnish all supervision, labor, materials, power, light, heat, fuel, water, tools, appliances, equipment, supplies, and means of construction necessary for the proper performance and completion of the work. Contractor shall obtain and pay for all required permits, if identified. Contractor shall perform and complete the work in the manner best estimated to promote rapid construction consistent with safety of life and property and to the satisfaction of the Owner, and in strict accordance with the Contract Documents. The Contractor shall clean up the work and maintain it during and after construction, until accepted, and shall do all work and pay all costs incidental thereto. Contractor shall repair or restore all structures and property that may be damaged or disturbed during performance of the work.

2. The cost of incidental work described in these General Requirements, for which there are no specific Contract Items, shall be considered as part of the general cost of doing the work and shall be included in the prices for the various Contract Items. No additional payment will be made therefor.

3. The Contractor shall provide and maintain such modern materials, tools, and equipment as may be necessary, in the opinion of the Engineer, to perform in a satisfactory and acceptable manner all the work required by this Contract. Only equipment of established reputation and proven efficiency shall be used. The Contractor shall be solely responsible for the adequacy of his workmanship, materials and equipment, prior acceptance of the Engineer notwithstanding.

C. Public Utility Installations and Structures:

1. Public utility installations and structures shall be understood to include all poles, tracks, pipes, wires, conduits, vaults, manholes and all other appurtenances and facilities pertaining thereto whether owned or controlled by the Owner, other governmental bodies or privately owned by individuals, firms or corporations, used to serve the public with transportation, traffic control, gas, electricity, telephone, sewerage, drainage, water or other public or private property which may be affected by the work shall be deemed included hereunder.

2. The Contract Documents contain data relative to existing public utility installations and structures above and below the ground surface. This data is not guaranteed as to their completeness or accuracy, and it is the responsibility of the Contractor to make investigations to fully understand the character, condition, and extent of all such installations and structures as may be encountered and as may affect the construction operations.

3. The Contractor shall protect all public utility installations and structures from damage during the Work. Access across any buried public utility installation or structure shall be made only in such locations and by means accepted by the Engineer. The Contractor shall so arrange his operations as to avoid any damage to these facilities. All required protective devices and

construction shall be provided by the Contractor at no additional expense to Owner or Engineer. All existing public utilities damaged by the Contractor which are shown on the Drawings or have been located in the field by the utility shall be repaired by the Contractor, at his expense, as directed by the Engineer. No separate payment shall be made for such protection or repairs to public utility installations or structures.

4. Public utility installations or structures owned or controlled by the Owner or other governmental body which are shown on the Drawings to be removed, relocated, replaced, or rebuilt by the Contractor shall be considered as a part of the general cost of doing the Work and shall be included in the prices bid for the various Contract items. No separate payment shall be made therefor.

5. Where public utility installations of structures owned or controlled by the Owner or other governmental body are encountered during the course of the Work, and are not indicated on the Drawings or in the Specifications, and when, in the opinion of the Engineer, removal, relocation, replacement or rebuilding is necessary to complete the Work under this Contract, such work shall be accomplished by the utility having jurisdiction, or such work may be ordered, in writing by the Engineer, for the Contractor to accomplish. If such work is accomplished by the utility having jurisdiction it will be carried out expeditiously and the Contractor shall give full cooperation to permit the utility to complete the removal, relocation, replacement or rebuilding as required. If such work is accomplished by the Contractor, it will be paid for as extra work as provided in the Agreement.

6. The Contractor shall, at all times in performance of the Work, employ accepted methods and exercise reasonable care and skill so as to avoid unnecessary delay, injury, damage or destruction of public utility installations and structures; and shall, at all times in the performance of the Work, avoid unnecessary interference with, or interruption of, public utility services, and shall cooperate fully with the owners thereof to that end.

7. The Contractor shall give written notice to Owner, other governmental utility departments and other owners of public utilities of the location of his proposed construction operations, at least forty-eight (48) hours in advance of breaking ground in any area or on any unit of the Work. In accordance with Florida Statute 556, the Contractor shall also call Florida State One Call of Florida, Inc., (also called Sunshine State One Call Center) at least 48 hours prior to excavating in any public rights-of-way. Their telephone number is (800) 432-4770.

8. The maintenance, repair, removal, relocation or rebuilding of public utility installations and structures, when accomplished by the Contractor as herein provided, shall be done by methods approved by the owners of such utilities.

9. The Contractor shall make provisions to avoid impacting existing facilities operation or maintenance activities. If an impact is anticipated, the Contractor shall propose a means to maintain existing activities, subject to approval by the Owner. The Owner will not be responsible for any costs associated with such proposed modification.

1.02 DRAWINGS AND PROJECT MANUAL

A. Drawings: When obtaining data and information from the Drawings, figures shall be used in preference to scaled dimensions, and large-scale drawings in preference to small scale drawings.

B. Copies Furnished to Contractor: After the Contract has been executed, the Contractor will be furnished up to five (5) complete sets of plans and five (5) copies of the Project Manual (Contract Requirements and Specifications) and all addenda.

C. Supplementary Drawings:

1. When, in the opinion of the Engineer, it becomes necessary to explain more fully the work to

be done or to illustrate the Work further or to show any changes which may be required, drawings known as Supplementary Drawings, with specifications pertaining thereto, will be prepared by the Engineer and the Contractor will be furnished up to five (5) sheets and one (1) reproducible copy of any revised specifications.

2. The Supplementary Drawings shall be binding upon the Contractor with the same force as the Drawings. Where such Supplementary Drawings require either less or more than the estimated quantities of work, credit to the Owner or compensation therefor to the Contractor shall be subject to the terms of the Agreement.

D. Contractor to Check Drawings and Data:

1. The Contractor shall verify all dimensions, quantities and details shown on the Drawings, Supplementary Drawings, schedules, Specifications or other data received from the Engineer, and shall notify him of all errors, omissions, conflicts, and discrepancies found therein. Failure to discover or correct errors, conflicts or discrepancies shall not relieve the Contractor of full responsibility for unsatisfactory work, faulty construction or improper operation resulting therefrom nor from rectifying such conditions at no additional expense to Owner or Engineer. Contractor will not be allowed to take advantage of any errors or omissions, as full instructions will be furnished by the Engineer, should such errors or omissions be discovered.

2. All schedules are given for the convenience of the Owner and the Contractor and are not guaranteed to be complete. The Contractor shall assume all responsibility for the making of estimates of the size, kind, and quality of materials and equipment included in work to be done under the Contract and additional work claimed by Contractor.

E. Specifications: The Technical Specifications consist of three parts: General, Products and Execution. The General Section contains General Requirements which govern the work. Products and Execution modify and supplement these by detailed requirements for the work and shall always govern whenever there appears to be a conflict.

F. Intent:

1. All work called for in the Specifications applicable to this Contract, but not shown on the Drawings in their present form, or vice versa, shall be of like effect as if shown or mentioned in both. Work not specified in either the Drawings or in the Specifications, but involved in carrying out their intent or in the complete and proper execution of the Work, is required and shall be performed by the Contractor as though it were specifically delineated or described.

2. The apparent silence of the Specifications as to any detail, or the apparent omission from them of a detailed description concerning any work to be done and materials to be furnished, shall be regarded as meaning that only the best general practice is to prevail and that only material and workmanship of the best quality is to be used, and interpretation of these Specifications shall be made upon that basis.

1.03 MATERIALS AND EQUIPMENT

A. Manufacturer:

1. The names of proposed manufacturers, material suppliers, and dealers who are to furnish materials, fixtures, equipment, appliances, or other fittings shall be submitted to the Engineer for acceptance, prior to construction, to afford proper investigation and checking. No manufacturer will be accepted for any materials to be furnished under this Contract unless he shall be of good reputation and have a plant of ample capacity. Contractor shall, upon the request of the Engineer, be required to submit evidence that he has manufactured a similar product to the one specified and that it has been previously used for a like purpose for a sufficient length of time to demonstrate its satisfactory performance.

2. All transactions with the manufacturers or subcontractors shall be through the Contractor, unless the Contractor shall request, in writing to the Engineer, that the manufacturer or subcontractor deal directly with the Engineer. Any such transactions shall not in any way release the Contractor from his full responsibility under this Contract and will not impose any liability on the Owner or Engineer.

3. Any two or more pieces of material or equipment of the same kind, type or classification, and being used for identical types of service, shall be made by the same manufacturer.

B. Delivery:

1. The Contractor shall deliver materials to the site in ample quantities to ensure the most speedy and uninterrupted progress of the work so as to complete the work within the allotted time. However, the Contractor shall not store materials on-site for more than ninety (90) days before installation or store equipment for more than thirty (30) days before installation. This will not supersede more stringent requirements noted elsewhere in the Contract Documents.

2. The Contractor shall also coordinate deliveries in order to avoid delay in, or impede, the progress of the work of any related Contractor.

3. All materials and equipment shall be properly stored on site in accordance with these specifications and the manufacturer's recommendations. Items stored improperly will be refused for installation.

C. Tools and Accessories:

1. The Contractor shall, unless otherwise stated in the Contract Documents, furnish with each type, kind or size of equipment, one complete new and unused set of suitably marked high grade special tools and appliances which may be needed to adjust, operate, maintain or repair the equipment. Such tools and appliances shall be furnished in accepted painted steel cases, properly labeled and equipped with good grade cylinder locks and duplicate keys.

2. Each piece of equipment shall be provided with a substantial nameplate, securely fastened in place and clearly inscribed with the manufacturer's name, year of manufacture, serial number, weight and principal rate data.

D. Service of Manufacturer's Engineer:

1. The Contract prices for equipment shall include the cost of furnishing a competent and experienced engineer or superintendent who shall represent the manufacturer and shall assist the Contractor, when required, to install, adjust, test and place in operation, the equipment in conformity with the Contract Documents.

2. Prior to the equipment being placed in permanent operation by the Owner, such engineer or superintendent shall make all adjustments and tests required by the Engineer to prove that such equipment is in proper and satisfactory operating condition, and shall instruct such personnel as may be designated by the Owner in the proper operation and maintenance of such equipment.

1.04 INSPECTION AND TESTING

A. General:

1. For tests specified to be made by the Contractor, the testing personnel shall make the necessary inspections and tests and the reports thereof shall be in such form as will facilitate checking to determine compliance with the Contract Documents. Two (2) originally executed and five copies of the reports shall be submitted and authoritative certification thereof shall be furnished to the Engineer as a prerequisite for the acceptance of any material or equipment.

2. If, in the making of any test of any material or equipment, it is ascertained by the Engineer that the material or equipment does not comply with the Contract Documents, the Contractor will be notified thereof and he will be directed to refrain from delivering said material or equipment, or to remove it promptly from the site or from the work and replace it with acceptable material, without cost to the Owner or Engineer.

3. Tests of electrical and mechanical equipment and appliances shall be conducted in accordance with recognized test codes of the ANSI, ASME, or the IEEE, except as may otherwise be stated herein.

4. The Contractor shall be fully responsible for the proper operation of equipment during tests and instruction periods and shall neither have nor make any claim for damage which may occur to equipment prior to the time when the Owner executes final acceptance of the work.

B. Costs:

1. The cost of preliminary shop and field tests of equipment and certain other tests specifically called for in the Contract Documents shall be borne by the Contractor and such costs shall be deemed to be included in the Contract price.

2. Materials and equipment submitted by the Contractor as the equivalent to those specifically named in the Contract may be tested by the Owner for compliance. The Contractor is responsible for providing sufficient information to allow Engineer to determine that the item of material or equipment proposed is equivalent to that specifically named and an acceptable substitute therefor. If in the sole discretion of the Engineer, tests of the proposed substitute items are necessary for Engineer's review, the substitute items will be tested by the Contractor at no additional cost to the Owner.

C. Inspection of Materials:

1. The Contractor shall give notice in writing to the Engineer, sufficiently in advance of his intention to commence the manufacture or preparation of materials especially manufactured or prepared for use in or as part of the permanent construction. Such notice shall contain a request for inspection, the date of commencement and the expected date of completion of the manufacture or preparation of materials. Upon receipt of such notice, the Engineer will arrange to have a representative present at such times during the manufacture as may be necessary to inspect the materials or Engineer will notify the Contractor that the inspection will be made at a point other than the point of manufacture.

2. The Contractor must comply with these provisions before shipping any material. Such inspection shall not release the Contractor from the responsibility for furnishing materials meeting the requirements of the Contract Documents.

D. Certificate of Manufacture:

1. The Contractor shall furnish to Engineer authoritative evidence in the form of Certificate of Manufacture that the materials to be used in the work have been manufactured and tested in conformity with the Contract Documents.

2. These certificates shall be notarized and shall include copies of the results of physical tests and chemical analyses, where necessary, that have been made directly on the product to be provided by the manufacturer. Two (2) original and five (5) copies are to be provided to the Engineer.

E. Shop Tests:

1. Testing for pressure, duty, capacity, rating, efficiency, performance, function or special requirements which are specified shall be tested in the shop of the manufacturer in a manner

which shall conclusively prove that its characteristics comply fully with the requirements of the Contract Documents.

2. No such equipment or materials shall be shipped to the Work site until the Engineer notifies the Contractor, in writing, that the results of such tests are acceptable.

3. Two (2) signed original and five (5) copies of the manufacturer's actual test data and interpreted results thereof, accompanied by two (2) signed original and five (5) copies of a certificate of authenticity sworn to by a responsible official of the manufacturing company and/or independent laboratory, shall be forwarded to the Engineer for acceptance.

4. The cost of shop tests and of furnishing manufacturer's preliminary and shop test data of operating equipment shall be borne by the Contractor.

F. Final Inspection: During such final inspections, the Work shall be clean and functional. In no case will the final estimate be prepared until the Contractor has complied with all requirements set forth and the Engineer and Owner have made their final inspection of the entire Work and are satisfied that the entire Work is properly and satisfactorily constructed in accordance with the requirements of the Contract Documents.

1.05 TEMPORARY STRUCTURES

A. Temporary Fences: If, during the course of the Work, it is necessary to remove or disturb any fence or part thereof, the Contractor shall provide a suitable temporary fence at no additional cost to Owner or Engineer.

B. Responsibility for Temporary Structures: In executing the Contract, the Contractor assumes full responsibility for the sufficiency and safety of all temporary structures or work and for any damage which may result from their failure or their improper construction, maintenance or operation and will indemnify and hold harmless the Owner and Engineer from all claims, suits or actions and damages or costs of every description arising by reason of failure to comply with the above provisions.

1.06 ACCIDENT PREVENTION

A. Precautions shall be exercised at all times for the protection of person and property. The safety provisions of applicable laws, building and construction codes shall be observed.

B. The Contractor shall comply with the U.S. Department of Labor Safety and Health Regulations for construction promulgated under the Occupational Safety and Health Act of 1970 (PL 91-596), and under Hours and Safety Standards Act Section 107 of the contract Work. Hours and Safety Standards Act (PL 91-54), except where state and local safety standards exceed the federal requirements and except where state safety standards have been approved by the Secretary of Labor in accordance with provisions of the Occupational Safety and Health Act, shall be complied with.

C. First Aid: The Contractor shall keep upon the site, at each location where work is in progress, a completely equipped first aid kit and shall provide ready access thereto at all times when men are employed on the Work.

1.07 LINES AND GRADES

A. Grade:

1. All work under this Contract shall be constructed in accordance with the lines and grades shown on the Drawings, or as provided by the Engineer. The full responsibility for keeping alignment and grade shall rest upon the Contractor.

2. The Owner will provide available information regarding benchmarks and base line controlling points on the drawings. Reference marks for lines and grades as the work progresses will be

located by Contractor to cause as little inconvenience to the prosecution of the Work as possible. The Contractor shall so place excavation and other materials as to cause no inconvenience in the use of the reference marks provided. The Contractor shall remove any obstructions placed contrary to this provision.

B. Surveys:

1. The Contractor shall furnish and maintain, at no additional expense to Owner or Engineer, stakes, temporary benchmarks and other such materials.

2. The Contractor shall check such reference marks by such means as he may deemed necessary and, before using them, shall provide written notification to Engineer's regarding presumed inaccuracies.

3. The Contractor shall, at no additional expense to Owner or Engineer, establish all working or construction lines and grades as required from the reference marks made available by the Owner, and shall be solely responsible for the accuracy thereof.

C. Safeguarding Marks:

1. The Contractor shall safeguard all points, stakes, grade marks, monuments and benchmarks made or established on the Work, bear the cost of reestablishing them if disturbed, and bear the entire expense of rectifying work improperly installed due to not maintaining or protecting or to removing without authorization such established points, stakes and marks.

2. The Contractor shall safeguard all existing property corners, monuments and marks adjacent to but not related to the Work, whether known or discovered, and shall bear the cost of reestablishing them in identical manner if disturbed or destroyed.

1.08 ADJACENT STRUCTURES AND LANDSCAPING

A. Responsibility:

1. In addition to all work within the Temporary Construction Easement, the Contractor shall be entirely responsible and liable for all damage or injury as a result of Contractor’s operations to all other adjacent public and private property, structures of any kind and appurtenances thereto met with during the progress of the Work.

2. The cost of protection, replacement in their original locations and conditions or payment of damages for injuries to such adjacent public and private property and structures affected by the work, whether or not shown on the Drawings, and the removal, relocation and reconstruction of such items called for on the Drawings or specified shall be included in the various Contract Items and no separate payments will be made, therefore.

3. Contractor is expressly advised that the protection of buildings, structures, tanks, pipelines, etc. and related work adjacent and in the vicinity of his operations, wherever they may be, is solely their responsibility.

4. Conditional inspection of buildings or structures in the immediate vicinity of the project which may reasonably be expected to be affected by the Work shall be performed by and be the responsibility of the Contractor.

5. Contractor shall, before starting operations, make an examination of the adjacent structures, buildings, facilities, etc., and record by notes, measurements, photographs, etc., conditions which might be aggravated by open excavation and construction. Repairs or replacement of all conditions disturbed by the construction shall be made to the satisfaction of the Owner and Engineer. This does not preclude conforming to the requirements of the insurance underwriters. Copies of surveys, photographs, reports, etc., shall be provided to the Owner.

See also Section 01850.

6. Prior to the beginning of any excavations the Contractor shall advise the Owner of all structures on which Contractor intends to perform work or which performance of the Work will affect.

B. Protection of Trees: All trees and shrubs shall be adequately protected by the Contractor with boxes and in accordance with ordinances governing the protection of trees. Excavated materials shall be placed so as not to injure such trees or shrubs. Trees or shrubs destroyed by negligence of the Contractor or Contractor's employees shall be replaced by Contractor with new stock of similar size and age, at its proper season and at the sole expense of the Contractor.

C. Lawn Areas: Lawn areas shall be left in as good condition as before the starting of the Work. Where sod is to be removed, it shall be carefully removed, and later replaced, or the area where sod has been removed shall be restored with new sod. The price of such work shall have been included in the Bid Total.

D. Restoration of Fences:

1. Any fence, or part thereof, that is damaged or removed during the course of the Work shall be replaced or repaired by the Contractor and shall be left in as good a condition as before the starting of the Work.

2. The manner in which the fence is repaired or replaced and the materials used in such work shall be subject to the acceptance of the Owner and Engineer.

3. The cost of all labor, materials, equipment, and work for the replacement or repair of any fence shall be deemed included in the appropriate Contract Item or items, or if no specific item is provided therefor, as part of the overhead cost of the work, and no additional payment will be made therefor.

1.09 PROTECTION OF WORK AND PUBLIC

A. Barriers and Lights:

1. During the prosecution of the work, the Contractor shall put up and maintain at all times such barriers and lights as will effectually prevent accidents.

2. The Contractor shall provide suitable barricades, red lights, "danger" or "caution" or "street closed" signs and flagmen at all places where the Work causes obstructions to the normal traffic or constitutes in any way a hazard to the public.

B. Noise:

1. The Contractor shall eliminate noise to as great an extent as practicable at all times. Air compressing equipment shall be equipped with silencers and the exhaust of all gasoline motors or other power equipment shall be provided with mufflers. The Contractor shall construct sound barriers as necessary to eliminate noise.

2. In the vicinity of hospitals and schools, special care shall be used to avoid noise or other nuisances. The Contractor shall strictly observe all local regulations and ordinances covering noise control.

3. Noise levels shall be as specified in Section 01030.

4. If the proper and efficient prosecution of the Work requires operations during the night, the written permission of the Owner shall be obtained before starting such items of the Work.

C. Access to Public Services: Neither the materials excavated, nor the materials or equipment used

in the construction of the Work shall be so placed as to prevent free access to all fire hydrants, valves or manholes.

D. Dust Prevention: The Contractor shall prevent dust nuisance from Contractor's operations or from traffic by keeping the roads and/or construction areas dampened with water at all times.

1.10 CUTTING AND PATCHING

A. The Contractor shall do all cutting, fitting or patching of the Work that may be required to make the several parts thereof join and coordinate in a manner satisfactory to the Engineer and in accordance with the Drawings and Specifications.

B. The work must be done by competent workmen skilled in the trade required by the restoration.

1.11 CLEANING

A. During Construction:

1. During construction, the Contractor shall, at all times, keep the site of the Work and adjacent premises as free from material, debris and rubbish as is practicable and shall remove the same from any portion of the site if, in the opinion of the Owner or Engineer, such material, debris, or rubbish constitutes a nuisance or is objectionable.

2. The Contractor shall remove from the site all of Contractor's surplus materials and temporary structures when no further need therefore develops. Contractor shall be responsible and liable for all spillage and incur all associated costs including, but not limited to, costs related to repair and maintenance resulting from damages thereof, and fines that may be levied as a result of citations given by State or local regulatory agencies.

B. Final Cleaning:

1. At the conclusion of the Work, all erection plant, tools, temporary structures and materials belonging to the Contractor shall be promptly removed, and shall remove and promptly dispose of all water, dirt, rubbish or any other foreign substances to a facility permitted to manage these materials.

2. The Contractor shall thoroughly clean all equipment and materials installed and shall deliver such materials and equipment undamaged in a bright, clean, polished and new operating condition.

1.12 MISCELLANEOUS

A. Protection Against Siltation and Bank Erosion:

1. The Contractor shall arrange Contractor's operations and construct erosion control devices to minimize siltation and bank erosion on construction sites and on existing or proposed water course and drainage channels.

2. The Contractor, at no additional expense to Owner or Engineer, shall remove any siltation deposits and correct any erosion problems as directed by the Engineer which results from Contractor's construction operations.

B. Protection of Wetland Areas:

1. The Contractor shall properly dispose of all surplus material, including soil, in accordance with local, state and federal regulations and with Owner's instruction.

2. Under no circumstances shall surplus material be disposed of in wetland areas as defined by the Florida Department of Environmental Protection.

C. Existing Facilities: The work shall be so conducted to maintain existing traffic lanes in operation, except in accordance with the approved temporary MOT plan.

D. Use of Chemicals: All chemicals used during project construction or furnished for project operation, whether herbicide, pesticide, disinfection, polymer, reactant, or of other classification, must show approval of either EPA or USDA. Use of all such chemicals and disposal of residues shall be in strict conformance with instructions. Contractor shall obtain written approval from Owner prior to use of chemicals.

E. Cooperation with Other Contractors and Forces:

1. During progress of work under this Contract, it may be necessary for other contractors and persons employed by the Owner to work in or about the project.

2. The Owner reserves the right to put such other contractors to work and to afford such access to the work area to be performed at times as the Owner deems proper.

3. The Contractor shall not impede or interfere with the work of such other contractors engaged in or about the Work and shall so arrange and conduct the work that such other contractors may complete their work at the earliest date possible.

F. Construction shall be conducted and shall result in construction of the improvements of this project in full accordance with the conditions of the permits granted for the project.

1.13 PRE-EXISTING CONDITIONS

A. The Contractor shall conduct a pre-existing conditions survey of each of the existing structures and other areas that are to remain during the Work. The survey shall establish the state of the property before construction as a basis for any claims of damage that may occur. See also Section 01850.

1.14 NOTICES

A. In conformance with the requirements of the General Conditions all notices or other papers required to be delivered by the Contractor to the Owner, **except the bids**, shall be delivered to Junos Reed, Engineering and Construction Manager, Port Orange Public Utilities Department, 1395 Dunlawton Avenue, Port Orange, 32129.

1.15 COORDINATION OF PLANS, SPECIFICATIONS AND SPECIAL PROVISIONS

A. In case of discrepancy, the most stringent condition will govern from the plans or specifications. Computed dimensions shall govern over scaled dimensions. NOTE: CONTRACTOR MUST BE AWARE THAT SOME SECTION(s) OR SUBSECTION(s) DO NOT SPECIFICALLY APPLY TO THIS PROJECT.

1.16 LAYING OUT THE WORK

A. Prior to commencement of construction the Engineer will have established vertical and horizontal controls throughout the work site which the Contractor shall use in setting out the work. The Contractor shall be responsible for establishing all lines and grades together with all reference points as required by the various trades for all work under this Contract. All required layout shall be done using competent and experienced personnel under the supervision of a Land Surveyor registered in the State of Florida.

B. The Contractor shall provide all labor and instruments and stakes, templates, and other materials necessary for marking and maintaining all lines and grades. The lines and grades shall be subject to any checking the Owner or Engineer may decide necessary.

C. No separate cost item is provided for laying out the work; the cost of which shall be included in the unit price for items in the Proposal.

1.17 PRE-BID AND PRECONSTRUCTION CONFERENCES

A. A pre-bid conference will be held to assist interested contractors in submitting proper bids. At this time all questions concerning the contract documents will be addressed. All prospective bidders are strongly encouraged to attend.

B. A preconstruction conference will be held with the awarded Contractor to establish procedures and to obtain working understanding among the parties concerning the project.

1.18 PERMITS AND LICENSES

A. Before starting the work, the Contractor shall obtain and possess all required licenses and permits.

1.19 OBSTRUCTIONS

A. All water pipes, storm drains, force mains, gas or other pipe, telephone or power cables or conduits, and all other buried or unburied obstructions, whether or not shown, shall be temporarily removed from, or supported across pipeline and other excavations. Before disconnecting any pipes or cables, the Contractor shall obtain permission from their owner, or shall make suitable arrangements for their disconnection by their owner. The Contractor shall be responsible for any damage to any such pipes, conduits or cables, and shall restore them to service promptly as soon as the work has progressed past the point involved. Approximate locations of known water, sanitary, drainage, power and telephone installations along the route of new pipelines or in the vicinity of new work are shown, but must be verified in the field by the Contractor. The Contractor shall uncover these pipes, ducts, cables, etc., carefully, by hand, prior to installing new piping. Any discrepancies or differences found shall be brought to the attention of the Owner in order that necessary changes may be made to permit installation of new pipe.

1.20 DAMAGE TO EXISTING STRUCTURES AND UTILITIES

A. The Contractor shall be responsible for and make good all damage to pavement, sidewalks, pedways, buildings, telephone or other cables, water pipes, sanitary pipes, or other structures which may be encountered, whether or not shown on the drawings.

B. Information shown on the Drawings as to the location of the existing utilities has been prepared from the most reliable data available to the Engineer. This information is not guaranteed, however, and it shall be this Contractor’s responsibility to determine the location, character and depth of any existing utilities. They shall assist the utility companies, by every means possible, to determine said locations. Extreme caution shall be exercised to eliminate any possibility of any damage to utilities resulting from their activities.

PART 2 - PRODUCTS (NOT USED)

PART 3 - EXECUTION (NOT USED)

END OF SECTION

PAGE INTENTIONALLY LEFT BLANK

SECTION 01025

MEASUREMENT AND PAYMENT

PART 1 - GENERAL

1.01 SCOPE

Payment for the various items of the Bid Schedule, as further specified herein, will include all compensation to be received by the Contractor for furnishing all tools, equipment, supplies, and manufactured articles, and for all labor, operations, and incidentals appurtenant to the items of work being described, as necessary to complete the various items of the Work, all in accordance with the requirements of the Contract Documents, including all appurtenances thereto, and including all costs of permits and cost of compliance with the regulations of public agencies having jurisdiction, including Safety and Health Requirements of the Occupational Safety and Health Administration of the U.S. Department of Labor (OSHA). The Contractor shall accept the compensation in full payment for all loss or damages arising from the nature of the work, or from any discrepancy between the actual quantities of work and quantities herein estimated by the Engineer, or from the action of the elements or from any unforeseen difficulties which may be encountered during the prosecution of the work until the final acceptance by the Owner. No separate payment will be made for any item that is not specifically set forth in the Bid Schedule, and all costs therefor will be included in the prices named in the Bid Schedule for the various appurtenant items of the completed work.

The prices stated in the Bid include all costs and expenses for taxes, labor, equipment, materials, commissions, transportation charges and expenses, patent fees and royalties, labor for handling materials during inspection, together with any and all other costs and expenses for performing and completing the work as shown on the Drawings and specified herein. The basis of payment for an item, task or procedure, at the unit or lump sum price shown in the Bid Schedule, shall be in accordance with the description of that item in this Section.

The Contractor's attention is called to the fact that the quotations for the various items of work are intended to establish a total price for completing the work in its entirety. Should the Contractor feel that the cost for any item of work has not been established by the Bid Schedule or Payment Items, the Contractor shall include the cost for that work in some other applicable bid item, so that the proposal for the project reflects the Contractor’s total price for completing the work in its entirety.

1.02 MEASUREMENT

Where indicated for measurement, the quantities for payment under this Contract shall be determined by actual measurement of the completed items, in place, ready for service and accepted by the Owner, in accordance with the applicable method of measurement therefore contained herein. A representative of the Contractor shall witness all field measurements.

Subject to all other Contract requirements, the Contractor shall be paid for "as-built" quantities of work for which a unit price is given in the bid.

Where payment limit lines are shown on the Contract Drawings, or specified herein, measurements of a payment item quantity will be made up to, but not beyond such lines.

Where the actual work of a payment item falls short of the payment limit line, measurement will be made to the line of the actual work.

No measurement for payment will be made for quantities outside of payment limit lines unless authorized in writing by the Owner.

1.03 MOBILIZATION/DEMOBILIZATION (BID ITEM NO. 1)

Periodic payment will be made for these items based upon percent complete, less retainage.

Payment for Mobilization, demobilization, will be made at the lump sum price named in the Bid Schedule under Bid Item No. 1, which price shall constitute full compensation for mobilizing and demobilizing, in accordance with the requirements of the Contract Documents.

1.04 INSURANCE AND BONDS (BID ITEM NO. 2)

Periodic payment will be made for these items based upon percent complete, less retainage.

Payment for Insurance, and Bonds will be made at the lump sum price named in the Bid Schedule under Bid Item No. 2, which price shall constitute full compensation for providing all required insurance and performance, payment and maintenance bonds in accordance with the requirements of the Contract Documents.

1.05 PRECONSTRUCTION VIDEO (BID ITEM NO. 3)

Periodic payment will be made for this item based upon percent complete, less retainage.

Payment for performing the Preconstruction Video recording, including all field work, written narrative and submission of required DVD recordings will be made at the lump sum price named in the Bid Schedule under Bid Item No. 3, which price shall constitute full compensation for all such work performed in accordance with the requirements of the Contract Documents.

1.06 CONSTRUCTION RESTORATION (BID ITEM NO. 4)

Periodic payment will be made for this item based upon percent complete, less retainage.

Payment for keeping the sites clean, for final clean-up, and for site restoration for the Lowes/Gateway Lift Station project will be made at the lump sum price named in the Bid Schedule under Item No. 4, which price shall constitute full compensation for providing all clean-up and site restoration described in these Contract Documents.

1.07 LIFT STATION DEMOLITION (BID ITEM NO. 5)

Periodic payment will be made for this item based upon percent complete, less retainage.

Payment for demolition of the existing lift station and any other associated site work necessary to prepare the existing wet well and above grade pump station to be converted to a submersible pump station will be made at the lump sum price named in the Bid Schedule under Item No. 5, which price shall constitute full compensation for all such work performed in accordance with the requirements of these Contract Documents. This bid item will include all work related to removing the lift station top, removing existing suction piping and all other piping, fittings, and equipment inside the existing wet well, sandblasting the concrete lift station interior, removing approximately 10 linear feet of existing 6-inch force main, and all associated field work, materials, equipment and labor necessary to prepare the existing lift station for conversion to a submersible pump station.

1.08 SITE WORK (BID ITEM NO. 6)

Periodic payment will be made for this item based upon percent complete, less retainage.

Payment for clearing and grubbing, grading, and erosion control for the Lowes/Gateway Lift Station project will be made at the lump sum price named in the Bid Schedule under Item No. 6, which price shall constitute full compensation for providing all site work described in these Contract Documents.

1.09 CONSTRUCTION TESTING (BID ITEM NO. 7)

Periodic payment will be made for this item based upon percent complete, less retainage.

Payment for performing the construction testing including pipe pressure testing, and density testing, as required, will be made at the lump sum price named in the Bid Schedule under Item No. 7, which price shall constitute full compensation for all such work performed in accordance with the requirements of these Contract Documents.

1.10 SURVEY LAYOUT & RECORD DRAWINGS (BID ITEM NO. 8)

Periodic payment will be made for these items based upon percent complete, less retainage.

Payment for performing the Survey Layout of the work, for maintaining the Project Documentation, and for preparing and delivering the As-built drawings to the Engineer of Record, will be made at the lump sum price named in the Bid Schedule under Bid Item No. 8, which price shall constitute full compensation for all such work performed in accordance with the requirements of the Contract Documents.

1.11 FDOT #57 STONE (BID ITEM NO. 9)

Periodic payment will be made for this item based upon percent complete, less retainage.

Payment for performing the gravel, including all field work, materials, equipment and labor necessary to complete the installation will be made at the cubic yard price named in the Bid Schedule under Item No. 9 which price shall constitute full compensation for all such work performed in accordance with the requirements of these Contract Documents.

1.12 CONCRETE PADS AND DRIVEWAY (BID ITEM NO. 10)

Periodic payment will be made for this item based upon percent complete, less retainage.

Payment for performing the concrete, including all field work, pads, materials, equipment and labor necessary to complete the installation will be made at the cubic yard price named in the Bid Schedule under Item No. 10 which price shall constitute full compensation for all such work performed in accordance with the requirements of these Contract Documents.

1.13 LIFT STATION IMPROVEMENTS (BID ITEM NO. 11)

Periodic payment will be made for this item based upon percent complete, less retainage.

Payment for modifications to the existing lift station and any other associated site work necessary to convert the existing wet well and above grade pump station to a submersible pump station, including all field work, materials, equipment and labor necessary to complete the modifications will be made at the lump sum price named in the Bid Schedule under Item No. 11 which price shall constitute full compensation for all such work performed in accordance with the requirements of these Contract Documents.

1.14 SUBMERSIBLE PUMP (BID ITEM NO. 12)

Periodic payment will be made for this item based upon percent complete, less retainage.

Payment for Submersible Pump including the pump, base elbows, anchor bolts, guide rail systems, access hatch, and startup, and all other materials, equipment, and labor necessary for a complete and fully operable system will be made at the unit price named in the Bid Schedule under Item No. 12, which price shall constitute full compensation for furnishing and installing the submersible pump the requirements of these Contract Documents.

1.15 6-IN ABOVE GROUND VALVE ASSEMBLY (BID ITEM NO. 13)

Periodic payment will be made for this item based upon percent complete, less retainage.

Payment for materials and installation of the 6-inch DIP force main including restrained joints, fittings, reducers, valves, air release valves, camlock fittings, pipe supports, materials, equipment, and labor necessary to complete the installation will be made at the lump sum price named in the Bid Schedule under Item No. 13, which price shall constitute full compensation for all such work performed in accordance with the requirements of these Contract Documents.

1.16 6-IN PVC FORCE MAIN –PIPING (BID ITEM NO. 14)

Periodic payment will be made for this item based upon percent complete, less retainage.

Payment for materials and installation of the 6-inch PVC force main including restrained joints, fittings, materials, equipment, and labor necessary to complete the installation will be made at the linear foot price named in the Bid Schedule under Item No. 14, which price shall constitute full compensation for all such work performed in accordance with the requirements of these Contract Documents

1.17 6-IN HDPE FORCE MAIN – BYPASS PIPING (BID ITEM NO. 15)

Periodic payment will be made for this item based upon percent complete, less retainage.

Payment for materials and installation of the 6-inch HDPE force main including restrained joints, fittings, camlocks, materials, equipment, and labor necessary to complete the installation will be made at the linear foot price named in the Bid Schedule under Item No. 15, which price shall constitute full compensation for all such work performed in accordance with the requirements of these Contract Documents.

1.18 6-IN PLUG VALVE (BID ITEM NO. 16)

Periodic payment will be made for this item based upon percent complete, less retainage.

Payment for materials and installation of the 6-in plug valves including materials, equipment, and labor necessary to complete the installation will be made at the unit price named in the Bid Schedule under Item No. 16, which price shall constitute full compensation for all such work performed in accordance with the requirements of these Contract Documents.

1.19 CONNECTION TO EXISTING 8-INCH FORCE MAIN (BID ITEM NO. 17)

Periodic payment will be made for these items based upon linear feet installed, less retainage.

Payment for the connection to the existing 8” force main including all materials, equipment, and labor necessary to complete the installation will be made at the unit price named in the Bid Schedule under Item No. 17, which price shall constitute full compensation for furnishing the proposed valve and connecting to the existing force main, meeting the requirements of these Contract Documents.

1.20 HOSE BIBB RELOCATION (BID ITEM NO.18)

Periodic payment will be made for these items based upon linear feet installed, less retainage.

Payment for the hose bibb relocation including all materials, equipment, and labor necessary to complete the removal and reinstallation will be made at the unit price named in the Bid Schedule under Item No. 18, which price shall constitute full compensation for furnishing the proposed fitting and connecting to the existing reclaim main, meeting the requirements of these Contract Documents.

1.21 RECLAIM PIPING RELOCATION (BID ITEM NO.19)

Periodic payment will be made for these items based upon linear feet installed, less retainage.

Payment for the reclaim relocation including all materials, equipment, and labor necessary to complete the removal and reinstallation will be made at the unit price named in the Bid Schedule under Item No. 19, which price shall constitute full compensation for furnishing the proposed fitting and connecting to the existing reclaim main, meeting the requirements of these Contract Documents.

1.22 BYPASS OPERATIONS (BID ITEM NO.20)

Periodic payment will be made for these items based upon linear feet installed, less retainage.

Payment for the connection to the existing 8” force main including all materials, equipment, and labor necessary to complete the installation will be made at the unit price named in the Bid Schedule under Item No. 20, which price shall constitute full compensation for furnishing the proposed valve and connecting to the existing force main, meeting the requirements of these Contract Documents.

1.23 6-FT VINYL-COTATED CHAIN-LINK FENCE (BID ITEM NO. 21)

Periodic payment will be made for these items based upon each installed, less retainage.

Payment for the chain-link fencing including all materials, equipment, and labor necessary to complete the installation will be made at the linear foot price named in the Bid Schedule under Item No. 21, which price shall constitute full compensation for furnishing and installing the fencing meeting the requirements of these Contract Documents.

1.24 ELECTRICAL I&C (BID ITEM NO. 22)

Periodic payment will be made for this item based upon percent complete, less retainage.

Payment for Submersible Pump Station Electrical and Instrumentation work including new conduit and wiring, disconnects, new electrical and control equipment, VFDs, testing of power and control wiring to each of the submersible pumps, and all other materials, equipment, and labor necessary for a complete and fully operable system, including testing and start-up will be made at the lump sum price named in the Bid Schedule under Item No. 22 which price shall constitute full compensation for all such work performed in accordance with the requirements of these Contract Documents.

PART 2 – PRODUCTS (NOT USED)

PART 3 – EXECUTION (NOT USED)

END OF SECTION

THIS PAGE INTENTIONALLY LEFT BLANK

SECTION 01027

PERIODIC PAY ESTIMATES

PART 1 - GENERAL

1.01 PAY REQUEST SUBMISSION

A. Submit Periodic Pay Estimates to the Engineer and Owner in accordance with the schedule and format established by the Contract Documents.

1.02 FORMAT AND DATA REQUIRED

A. Submit Periodic Pay Estimates typed on standard EJCDC forms, with itemized data typed on 8 1/2-inch x 11-inch white paper continuation sheets.

B. Owner will use the approved Bid Schedule or approved Schedule of Values (Section 01370) as the basis for preparing the custom Periodic Pay Estimate form.

1.03 PREPARATION OF PERIODIC PAY ESTIMATES

A. Application Form (Pages 1 and 2):

1. Fill in required information, including that for Change Orders fully executed prior to closing date of the Periodic Pay Estimate. Enter Pay Estimate Number and date.

2. Fill in summary of dollar values to agree with respective totals indicated and derived on continuation sheets.

3. Execute Contractor's certification with signature of a responsible officer of Contract firm. Payments will not be processed without this certification.

B. Continuation Sheets (Page 3 and following, as needed):

1. Fill in total list of all scheduled component items of work, with item number and scheduled dollar value for each item, as shown on approved Schedule of Values. Adhere to Owner’s detailed instructions provided with the original copy of the Periodic Pay Estimate form. Verify each entry with Owner’s project Representative.

2. Fill in dollar value in each column for each scheduled line item when work has been performed or products stored in accordance with the requirements of these Contract Documents. Round off values to nearest dollar, or as specified for Schedule of Values.

3. List each Change Order executed prior to the closing date of submission, at the end of the continuation sheets. List by Change Order Number, and description, as for an original component item of work.

4. Include “Indemnification” and “Compliance with Trench Safety Act” on Pay Schedule.

5. To receive approval for payment on component material stored on site, submit copies of the original paid invoices with the Periodic Pay Estimate.

6. As provided for on the first page of the Periodic Pay Estimate form, the Contractor shall certify, for each current pay request, that all previous progress payments received from the Owner, under this Contract, have been applied by the Contractor to discharge in full all obligations of the Contractor in connection with Work covered by the Periodic Pay Estimate, and all materials and equipment incorporated into the Work are free and clear of all claims, security interest and encumbrances.

C. Initial Periodic Pay Estimate: Administrative actions and submittals that must precede or coincide

with submittal of the first Periodic Pay Estimate include the following:

1. List of Subcontractors.
2. List of principal suppliers and fabricators.
3. Initial Progress Schedule.
4. Shop drawing submittal schedule.
5. Certificates of insurance and insurance policies.
6. Copies of permits.
7. Copies of authorizations and licenses from governing authorities required for performance of the Work.
8. Performance and Payment Bonds.

D. Periodic Pay Estimate at Substantial Completion: Following issuance of the Certificate of Substantial Completion, submit a Periodic Pay Estimate. This application shall reflect any Certificates of Partial Substantial Completion issued previously for Owner occupancy of designated portions of the Work. Administrative actions and submittals that shall precede or coincide with this application include:

1. Occupancy permits and similar approvals.
2. Warranties (guarantees) and maintenance agreements.
3. Test/adjust/balance records.
4. Maintenance instructions.
5. Meter readings.
6. Start-up performance reports.
7. Change over information related to owner’s occupancy, use, operation, and maintenance.
8. Final Cleaning.
9. Change of door locks to Owner’s access.
10. Final progress photographs, as applicable.

E. Final Periodic Pay Estimate: Administrative actions and submittals which must precede or coincide with submittal of the Final Periodic Pay Estimate include the following:

1. Completion of Project closeout requirements.
2. Completion of items specified for completion after Substantial Completion.
3. Transmittal of required Project construction records to owner.
4. Removal of temporary facilities and services.
5. Removal of surplus materials, rubbish and similar elements.
6. Certified property survey.

7. Proof that taxes, fees, and similar obligations have been paid.

8. Maintenance Bond.

9. Waiver of Right to Claim Against the Payment Bond (Final Payment) for each Subcontractor, supplier, and vendor.

1.04 SUBSTANTIATING DATA FOR PROGRESS PAYMENTS

A. When the Owner or the Engineer requires substantiating data, Contractor shall submit suitable information, with a cover letter identifying:

1. Project.

2. Application number and date.

3. Detailed list of enclosures.

4. For stored products:

a. Item number and identification as shown on application.

b. Description of specific material.

B. Submit one copy of data and cover letter for each copy of application.

C. Construction Progress Schedule:

1. The Contractor shall submit up to date, revised progress schedules on a monthly basis with each Periodic Pay Estimate. See Specification Section 01310 for more information.

2. No Periodic Pay Estimates will be processed by Owner until the corresponding, current construction progress schedule has been received. The submitted progress schedule is subject to Engineer approval each month. If the Contractor does not gain Owner and Engineer approval of any schedule update, the following Periodic Pay Estimate will not be considered until such approval is obtained.

D. Project Record Documents:

1. During construction, Contractor shall keep a marked up, current set of record document drawings on-site as the accurate record of all deviations between work as shown and as installed. These drawings shall be available to the Owner and Engineer for inspection at any time. See Specification Section 01720 for additional information.

2. In accordance with specification section 01050, the Contractor shall retain the services of a registered land surveyor licensed in the State of Florida for purposes including record document preparation.

3. In accordance with Specification Section 01720, the Contractor shall be required to display the current record documents to the Owner and/or Engineer at the monthly progress meeting. The purpose of this submittal is to ensure that "As-Built" records are being kept up to date by the Contractor.

4. If the record documents are not kept up to date to the satisfaction of the Owner or Engineer, or the submission is not made by the requested day and time, monies may be retained from the Contractor's Periodic Pay Estimates.

1.05 PREPARATION OF FINAL PERIODIC PAY ESTIMATE

A. Fill in Application form as specified for progress payments.

B. Indicate appropriate, sequential number in the spaces marked "Pay Estimate No.", and add the word "FINAL" (Ex: "Pay Estimate No. 18 - FINAL")

1.06 SUBMITTAL PROCEDURE

A. Submit Periodic Pay Estimate to the Engineer at the time stipulated in the Agreement.

B. Number of originals (original signature required) for each Periodic Pay Estimate:

1. Owner: One (1) copy

2. Engineer: Electronic (1) copy in PDF format

3. Contractor: One (1) copy

C. When the Engineer finds Application properly completed and correct, they will transmit copies for payment to the Owner. After Processing, the Owner will then forward one copy for Contractor's files.

PART 2 - PRODUCTS (NOT USED)

PART 3 - EXECUTION (NOT USED)

END OF SECTION

SECTION 01030

SPECIAL PROJECT PROCEDURES

PART 1 - GENERAL

1.01 WORKMANSHIP, MATERIAL AND EQUIPMENT

A. When a particular product is specified or called for, it is intended and shall be understood that the proposal tendered by the Contractor included those products in his bid. The alternate product or products submitted by the Contractor shall meet the requirements of the specifications and shall, in all respects, be equal to the products specified by name herein.

B. All apparatus, mechanism, equipment, machinery and manufactured articles for incorporation into the Work shall be the new and unused standard products of recognized reputable Manufacturers.

1.02 RESPONSIBILITY OF CONTRACTOR

A. The Contractor shall be responsible for the entire Work determined by the Drawings, Specifications and Contract from the date of the starting of the Work until it is accepted as evidence of approval of the Completion Certificate by the Owner. Contractor shall be responsible for removals, renewals and replacements due to action of the elements and all other causes except as otherwise provided in the Specifications. The Contractor shall keep the Contract under his own control and it shall be his responsibility to see that the Work is properly supervised and carried on faithfully and efficiently. The Contractor shall supervise the work personally or shall have a competent, English speaking superintendent or representative, who shall be on the site of the project at all working hours, and who shall be fully authorized by the Contractor to direct the performance of the work and to make arrangements for all necessary materials, equipment and labor without delay.

B. Renewals or repairs necessitated because of defective materials or workmanship, or due to action of the elements or other natural causes, including fire and flood, prior to the acceptance as determined by the Completion Certificate, as appropriate, shall be done anew in accordance with the Contract and Specifications at the expense of the Contractor.

1.03 PROVISIONS FOR CONTROL OF EROSION

A. Sufficient precautions shall be taken during construction to minimize the run-off of polluting substances such as silt, clay, fuels, oils, bitumens, calcium chloride, or other polluting materials harmful to humans, fish, or other life, into the supplies and surface waters of the state. Control measures must be adequate to assure that turbidity in the receiving water will not be increased more than 10 nephelometric turbidity units (NTUs), or as otherwise required by the state or other controlling body, in water used for public water supply or fish unless limits have been established for the particular water. In surface water used for other purposes, the turbidity must not exceed 25 NTU unless otherwise permitted. Special precautions shall be taken in the use of construction equipment to prevent operations which promote erosion.

B. Erosion evident within the limits of construction shall be the responsibility of the Contractor during the full term of the contract and for the full two (2) year guarantee period. Areas subject to erosion during this time shall be fully restored to original or design conditions (as applicable) within 10 days of notice to the Contractor.

1.04 ON SITE STORAGE

A. The Contractor’s attention is invited to special storage requirements and possible charges for noncompliance of on-site storage requirements for materials and equipment as specified in Section 01600.

1.05 HURRICANE PREPAREDNESS PLAN

A. Within 30 days of the date of Notice to Proceed, the Contractor shall submit to the Engineer and Owner a Hurricane Preparedness Plan. The plan should outline the necessary measures which the Contractor proposes to perform at no additional cost to the Owner in case of a hurricane warning. Such measures shall be in accordance with local and state requirements.

B. In the event of inclement weather, Contractor will, and will cause Subcontractors to protect carefully the Work and materials against damage or injury from the weather. If, in the opinion of Engineer, any portion of Work or materials shall have been damaged or injured by reason of failure on the part of the Contractor or Subcontractors to so protect the Work, such Work and materials shall be removed and replaced at the expense of Contractor.

1.06 WARRANTIES

A. Unless specified otherwise in the Contract Documents, all equipment supplied under these Specifications shall be warranted by the Contractor and the equipment Manufacturers for a period of two (2) years. Warranty period shall commence on the date of final acceptance by the Port Orange City Council.

B. The equipment shall be warranted to be free from defects in workmanship, design and materials. If any part of the equipment should fail during the warranty period, it shall be replaced in the machine(s) and the unit(s) restored to service at no expense to the Owner.

C. The Manufacturer's warranty period shall run concurrently with the Contractor's warranty or guarantee period. No exception to this provision shall be allowed. The Contractor shall be responsible for obtaining equipment warranties in accordance with Section 01740 from each of the respective supplier or Manufacturers for all the equipment specified. The form of warranty is included at the end of this section.

1.07 UTILITY CROSSINGS

A. It is intended that wherever existing utilities such as water, chemical, electrical or other service lines must be crossed, deflection of the pipe within recommended limits and cover shall be used to satisfactorily clear the obstruction unless otherwise indicated on the Drawings.

B. However, when in the opinion of the Owner or Engineer this procedure is not feasible, Contactor may employ fittings for a utility crossing as directed by the Engineer.

1.08 CONSTRUCTION CONDITIONS AND SUBSURFACE INVESTIGATION

A. The Contractor shall strictly adhere to the specific requirements of the governmental unit(s) or agency(ies) having jurisdiction over the work. Wherever there is a difference in the requirements of a jurisdictional body and these Specifications, the more stringent shall apply.

B. The Contractor shall be responsible for having determined to his satisfaction, prior to the submission of his bid, the nature and location of the work, the conformation of the ground, the character and quality of the substrata, the types and quantity of materials to be encountered, the nature of the groundwater conditions, the character of equipment and facilities needed preliminary to and during the prosecution of the work, the general and local conditions and all other matters which can in any way affect the work under this contract. The prices established for the work to be done will reflect all costs pertaining to the work. Any claims for extras based on substrata, groundwater table, and other such conditions will not be allowed.

1.09 PUBLIC NUISANCE

A. The Contractor shall not create a public nuisance including but not limited to encroachment on adjacent lands, flooding of adjacent lands, excessive noise, excessive and avoidable vibration, or unnecessary and avoidable impacts to motorists, bicyclists, and pedestrians utilizing the private residential or business access streets, driveways and parking lots in and adjacent to the project. The Contractor is advised to review and comply with all of the special vehicle and

pedestrian MOT requirements for this project.

B. If the Contractor requires the use of adjacent lands, a temporary easement or written contract with the property owner must first be negotiated, secured, paid for and obtained by the Contractor. This requirement applies to work areas and to lay down, staging, and temporary storage or office areas.

C. Dewatering activities and any other construction process or method which produces ground water or storm water runoff from the project site shall be conducted in a manner which prevents flooding of adjacent lands. All excess water from any source shall be directed to appropriate drainage systems capable of accommodating the excess flows.

D. Sound levels measured by the Owner shall not exceed 55 dBA 7 PM to 7 AM or 65 dBA 7 AM to 7 PM. This sound level is to be measured at the Owner's property line. It is the obligation of the Contractor to achieve these limits through proper construction equipment selection, temporary sound attenuation barriers, or other acceptable means. Sound levels in excess of these values are sufficient cause to have the work halted until equipment can be quieted to these levels. Work stoppage by the Engineer or Owner due to excessive noise shall not relieve the Contractor of the other portions of this specification including, but not limited to Contract Time and Contract Price.

E. In establishing Maintenance of Traffic Plans, work task schedules, and construction methods, the Contractor must fully consider minimizing impacts to motorists and pedestrians. At no time shall methods, procedures or schedules be approved or employed which will create undue hardship to the adjacent business patrons or other members of the public using the access streets, sidewalks, bus stops, or parking lots. Work stoppage by the Engineer or Owner due to unnecessary public impacts shall not relieve the Contractor of the other portions of this specification including, but not limited to contract time and contract price.

F. No extra charge may be made for time lost due to work stoppage resulting from the creation of a public nuisance.

1.10 SUSPENSION OF WORK DUE TO WEATHER

A. During inclement weather, all work which might be damaged or rendered inferior by such weather conditions shall be suspended. The orders and decisions of the Engineer as to suspensions shall be final and binding. The ability to issue such an order shall not be interpreted as a requirement to do so. During suspension of the work from any cause, the work shall be suitably covered and protected so as to preserve it from injury by the weather or otherwise; and, if the Engineer shall so direct, the rubbish and surplus materials shall be removed.

1.11 RELOCATIONS

A. The Contractor shall be responsible for the relocation of structures, including but not limited to light poles, signs, sign poles, fences, piping, conduits and drains that interfere with the positioning of the work as set out on the Drawings. The cost of all such relocations shall be included in the bid with the associated item requiring the relocations.

1.12 SALVAGE

A. Any existing equipment or material, including but not limited to, valves, pipes, fittings, couplings, etc., which is removed or replaced as a result of construction under this project may be designated as salvage by the Engineer or Owner and if so, shall be excavated, if necessary and delivered, to the Owner at a location directed by the Owner, at the Contractor's expense. All such salvage shall be at the Owner's discretion. Items refused by the Owner shall become the property of or shall be properly disposed of by the Contractor.

1.13 PERMITS

A. Upon notice of award, the Contractor shall immediately apply for all applicable permits not previously obtained by the Owner to do the work from the appropriate governmental agency or

agencies. (See also Section 01065.) No work shall commence until all applicable permits have been obtained and copies delivered to the Engineer. Except as provided elsewhere in these Contract Documents, the costs for obtaining all permits shall be borne by the Contractor.

1.14 NOTIFICATION OF WORK ON EXISTING FACILITIES

A. Before commencing work on any of the existing structures or equipment, the Contractor shall notify the Engineer, in writing, at least 10 calendar days in advance of the date he proposes to commence such work.

1.15 EASEMENT FOR WORK ON PRIVATE PROPERTY

A. The Contractor shall maintain construction operations within the presently existing property boundaries, road rights-of-way, and established easements throughout the project. Immediately after an award of contract is made, the Contractor shall submit to the Owner a listing of those areas in which Contractor deems it to be necessary to work outside of the prescribed areas. In the event that the Contractor deems it necessary or advisable to operate beyond the limits of the existing property boundaries, rights-of-way or established easements, Contractor shall be responsible for making special agreements with the affected property owners. The Contractor's plan shall be subject to the approval of the Owner and as construction areas are secured, copies of all written agreements shall be placed on file with the Owner and Engineer.

B. With the exception of any Temporary Construction Easement already provided, the Owner **will not** secure easements for additional working room.

1.16 CLAIMS FOR PROPERTY DAMAGE

A. Upon notification by the Owner or Engineer, the Contractor shall investigate each claim for property damage and shall file, within ten (10) days of such notification, a statement with Owner and Engineer setting forth all facts and details relative to such claim.

1.17 EXISTING UNDERGROUND PIPING, STRUCTURES AND UTILITIES

A. The locations of existing underground utilities are from information obtained from the respective utility companies and other sources. The locations are shown without express or implied representation, assurance, or guarantee that they are complete or correct or that they represent a true picture of underground piping to be encountered. It is the Contractor's responsibility to contact the state-sponsored central locate center and/or local existing utilities at least 48 hours prior to planned digging.

1.18 CLEAN-UP AND DUST CONTROL

A. At all times during the prosecution of the work, the Contractor shall maintain sufficient forces to clean up and control dust. Control of blowing litter or dust caused by any re-grading or other task by the Contractor shall be the responsibility of the Contractor.

1.19 CONNECTIONS TO EXISTING SYSTEMS

A. The Contractor shall perform all work necessary to locate, excavate and prepare for connections to the terminus of the existing systems all as shown on the Drawings or where directed by the Engineer. The cost of this work and for the actual connection of the existing mains shall be included in the bid for the project and shall not result in any additional cost to the Owner.

1.20 COORDINATION OF WORK

A. The Contractor shall afford other contractors and the Owner reasonable opportunity for the introduction and storage of their materials and equipment and the execution of their work and shall properly connect and coordinate the Work with such other work. The Contractor shall coordinate his Work with the Owner and other contractors to store apparatus, materials, supplies and equipment in such orderly fashion at the site of the Work as will not unduly interfere with the progress of the Work or the work of any other contractors.

B. If the execution or result of any part of the Work depends upon any work of the Owner or of any separate contractor, the Contractor shall, prior to proceeding with the Work, inspect and promptly report to the Owner in writing any apparent discrepancies or defects in such work of the Owner or of any separate contractor that render it unsuitable for the proper execution or result of any part of the Work.

C. Failure of the Contractor to so inspect and report shall constitute an acceptance of the Owner's or separate contractor's work as fit and proper to receive the Work.

D. Should the Contractor cause damage to the work or property of the Owner or of any separate contractor on the Project, or to other work on the Site, or delay or interfere with the Owner's work on ongoing operations or facilities or adjacent facilities or said separate contractor's work, the Contractor shall be liable for the same; and, in the case of another contractor, the Contractor shall attempt to settle said claim with such other contractor prior to such other contractor's institution of litigation or other proceedings against the Contractor.

E. If such separate contractor sues the Owner on account of any damage, delay or interference caused or alleged to have been so caused by the Contractor, the Owner shall notify the Contractor, who shall defend the Owner in such proceedings at the Contractor's expense. If any judgment or award is entered against the Owner, the Contractor shall satisfy the same and shall reimburse the Owner for all damages, expenses, attorney's fees and other costs which the Owner incurs as a result thereof.

F. Should a separate contractor cause damage to the Work or to the property of the Contractor or cause delay or interference with the Contractor's performance of the Work, the Contractor shall present directly to said separate contractor any claims it may have as a result of such damage, delay or interference (with an information copy to the Owner) and shall attempt to settle its claim against said separate contractor prior to the institution of litigation or other proceedings against said separate contractor.

G. In no event shall the Contractor seek to recover from the Owner or the Engineer, and the Contractor hereby represents to the Owner and the Engineer that it will not seek to recover from them, or either of them, any costs, expenses, (including, but not limited to, attorney's fees) or losses of profit incurred by the Contractor as a result of any damage to the Work or property of the Contractor or any delay or interference caused or allegedly caused by any separate contractor.

H. Any difference or conflict which may arise between the Contractor and other contractors who may be performing work on behalf of the Owner, or between the Contractor and workmen of the Owner in regard to their work shall be adjusted and determined by the Engineer. If the work of the Contractor is delayed because of any acts of omissions of any other contractor of the Owner, the Contractor shall on that account have no claim against the Owner other than for an extension of time.

1.21 FINAL GUARANTEE

A. All work shall be guaranteed by the Contractor for a period of two years from and after the date of acceptance of the work by the Owner.

B. If, within the guarantee period, repairs or changes are required in connection with guaranteed work, which, in the opinion of the Engineer, is rendered necessary as the result of the use of materials, equipment or workmanship which are inferior, defective, or not in accordance with the terms of the Contract, the Contractor shall, promptly upon receipt of notice from the Owner and without expense to the Owner, do the following:

1. Place in satisfactory condition in every particular all of such guaranteed work and correct all defects therein.

2. Make good all damage to the building or site, or equipment or piping or contents thereof, which, in the opinion of the Engineer, is the result of the use of materials, equipment or workmanship which are inferior, defective, or not in accordance with the terms of the contract.

3. Make good any work or material, or the equipment and contents of building, structure or site disturbed in fulfilling any such guarantee.

C. If the Contractor, after notice, fails within ten days to proceed to comply with the terms of this guarantee, the Owner may have the defects corrected, and the Contractor and his surety shall be liable for all expense incurred, provided, however, that in case of an emergency where, in the opinion of the Owner, delay would cause loss or damage, repairs may be started without notice being given to the Contractor and the Contractor shall pay the cost thereof.

D. All special guarantees or warranties applicable to specific parts of the work as may be stipulated in the Contract Specifications or other papers forming a part of this Contract shall be subject to the terms of this paragraph during the first year of life of each such guarantee. All special guarantees and manufacturers' warranties shall be assembled by the Contractor and delivered to the Engineer, along with a summary list thereof, before the acceptance of the work.

1.22 RIGHTS IN AND USE OF MATERIALS FOUND ON THE WORK

A. The Contractor, with the approval of the Engineer, may use on the project such stone, gravel, sand, or other material determined suitable by the Engineer, as may be found in the excavation and will be paid both for the excavation of such materials at the corresponding Contract unit price and for the pay item for which the excavated material is used. Contractor shall replace at his own expense with other acceptable material all of that portion of the excavation materials so removed and used which was needed for use in the embankments, backfills, approaches, or otherwise. No charge for the materials so used will be made against the Contractor.

PART 2 - PRODUCTS (NOT USED)

PART 3 - EXECUTION (NOT USED)

END OF SECTION

SECTION 01041

PROJECT COORDINATION

PART 1 - GENERAL

1.01 COMMITMENT

A. The Contractor shall furnish personnel and equipment which will be efficient, appropriate and large enough to secure a satisfactory quality of Work and a rate of progress which will ensure the completion of the Work within the time stipulated in the Contract.

1.02 PRIVATE LAND

A. The Contractor shall not enter or occupy private land outside of the site, except by written permission of the appropriate owners. Contractor shall provide Owner a copy of such written permission.

1.03 PIPE AND EQUIPMENT LOCATIONS

A. Pipelines and equipment shall be located substantially as indicated on the Drawings, however, Engineer reserves the right to make such modifications in locations as may be found desirable to avoid interference with existing structures or for other reasons. Where fittings are noted on the Drawings, such notation is for the Contractor's convenience and does not relieve them from laying and jointing different or additional items where required.

1.04 OPEN EXCAVATIONS

A. All open excavations shall be adequately safeguarded by providing temporary barricades, caution signs, lights and other means to prevent accidents to persons, and damage to property. The Contractor shall, at no additional expense to Owner or Engineer, provide suitable and safe bridges and other crossings for accommodating travel by plant operators and workmen.

1.05 TEST PITS

A. Test pits for the purpose of locating underground pipeline or structures in advance of the construction shall be excavated and backfilled by the Contractor. Test pits shall be backfilled and compacted immediately after their purpose has been satisfied and maintained in a manner satisfactory to the Engineer. The costs for such test pits shall be borne by the Contractor.

1.06 MAINTENANCE OF TRAFFIC

A. Unless permission to close a street is received in writing, by Owner from Contractor, from the proper authority (County, City, FDOT, etc.), all excavated material shall be placed so that vehicular and pedestrian traffic may be maintained at all times. If the Contractor's operations cause traffic hazards, Contractor shall repair the road surface, provide temporary ways, erect wheel guards or fences, or take other measures for safety satisfactory to the Engineer.

B. Detours around construction will be subject to the acceptance of the Owner and the Engineer. Where detours are permitted, the Contractor shall provide all necessary barricades and signs as required to divert the flow of traffic. While traffic is detoured the Contractor shall expedite construction operations and periods when traffic is being detoured will be strictly controlled by the Owner.

C. The Contractor shall take precautions to prevent injury to the public due to open trenches. Night watch may be required where special hazards exist, or police protection provided for traffic while work is in progress. The Contractor shall be fully responsible for damage or injuries whether or not police protection has been provided.

1.07 CARE AND PROTECTION OF PROPERTY

A. The Contractor shall be responsible for the preservation of all public and private property and

shall use every precaution necessary to prevent damage thereto. If any direct or indirect damage is done to public or private property by or on account of any act, omission, neglect, or misconduct in the execution of the Work on the part of the Contractor, such property shall be restored by the Contractor, at no additional expense to Owner or Engineer, to a condition similar or equal to that existing before the damage was done, or Contractor shall make good the damage in other manner acceptable to the Owner and Engineer.

1.08 COOPERATION WITHIN THIS CONTRACT

A. All firms or persons authorized to perform any Work under this Contract shall cooperate with the Contractor and his subcontractors or trades and shall assist in incorporating the work of other trades where necessary or required.

B. Cutting and patching, drilling, and fitting shall be carried out where required by the trade or subcontractor having jurisdiction, unless otherwise indicated herein or directed by the Engineer.

1.09 PROTECTION OF CONSTRUCTION AND EQUIPMENT

A. All newly constructed work shall be carefully protected from injury in any way. No wheeling or walking or placing of heavy loads on it shall be allowed and all portions injured shall be reconstructed by the Contractor at no additional expense to Owner or Engineer.

B. All structures shall be protected in a manner accepted by the Engineer. Should any of the floors or other parts of the structures become heaved, cracked or otherwise damaged, all such damaged portions of the Work shall be completely repaired and made good by the Contractor at no additional expense to Owner or Engineer, and to the satisfaction of the Engineer. If, in the final inspection of the Work, any defects, faults or omissions are found, the Contractor shall cause the same to be repaired or removed and replaced by proper materials and workmanship without extra compensation for the materials and labor required. Further, the Contractor shall be fully responsible for the satisfactory maintenance and repair of the construction and other work undertaken herein, for at least the guarantee period described in the Contract.

C. The Contractor shall take all necessary precautions to prevent damage to any structure due to water pressure during and after construction and until such structure is accepted and taken over by the Owner.

1.10 COOPERATION WITH OTHER CONTRACTS

A. It shall be necessary for the Contractor to plan his work and cooperate with other contractors, if present, insofar as possible to prevent any interference and delay.

PART 2 - PRODUCTS (NOT USED)

PART 3 - EXECUTION (NOT USED)

END OF SECTION

SECTION 01050

FIELD ENGINEERING AND SURVEYING

PART 1 - GENERAL

1.01 CONTRACTOR REQUIREMENTS

A. The Contractor is responsible for retaining the services of a registered land surveyor currently licensed in the State of Florida to establish and maintain property boundaries, benchmarks, reference points, and as-built information during construction.

B. All surveying for project vertical and horizontal control and construction layout shall be the responsibility of the Contractor. The accuracy of any method of surveying or construction staking shall be the responsibility of the Contractor.

C. The Contractor is responsible for the preservation of all benchmarks, stakes, and other survey marks. If any benchmarks, stakes, or marks are disturbed, the Contractor shall not proceed with the work until they have restored such items and have established such points, marks, lines, and elevations as may be necessary for the prosecution of the work.

D. If the Contractor offers for consideration any design changes to the Technical Specifications or Drawings of the Contract Documents, the Contractor is responsible for retaining the services of a professional engineer licensed in the State of Florida to provide all analysis and field engineering.

1.02 QUALIFICATIONS OF SURVEYOR OR ENGINEER

A. The Contractor's licensed engineer or registered land surveyor shall be acceptable to the Owner and the Engineer.

B. The Contractor’s professional engineer shall be qualified in the discipline required for the specific services proposed to be performed on the project.

1.03 SURVEY REFERENCE POINTS

A. Contractor shall locate and protect control points prior to starting site work. The Contractor shall:

1. Make no changes or relocations of control or reference points without prior written authority from the Engineer.

2. Report to the Engineer when any control or reference point is lost or destroyed, or becomes necessary to relocate them because of necessary changes in grades or locations.

B. Contractor's surveyor shall replace project control and reference points which may be lost or destroyed at no additional cost to the Owner. Establish replacement points based upon original survey control.

1.04 PROJECT SURVEY CONTROL

A. Establish a minimum of two permanent benchmarks on site, referenced to data established by survey control points, and record their horizontal locations and vertical elevations on the project as-built drawings.

B. Establish lines and grades, and locate and layout site improvements by instrumentation and other appropriate means.

1.05 PROJECT DOCUMENTS

A. Maintain a complete and accurate log of all control and survey work as it progresses.

B. Maintain progress as-built drawings by adding as-built survey information as it becomes available, consistent with the requirements for Project Documents, Section 01720.

1.06 SUBMITTALS

A. Submit a final, consolidated as-built drawing markup set of original drawings signed by a licensed surveyor to the Engineer at the end of the project, consistent with the requirements of Section 01720, Project Documents, with a certificate that elevations and locations of improvements are in conformance with the Contract Documents, or if not in conformance, certify as to variances from the Contract Documents.

PART 2 - PRODUCTS (NOT USED)

PART 3 - EXECUTION (NOT USED)

END OF SECTION

SECTION 01065

PERMITS AND FEES

PART 1 - GENERAL

1.01 DESCRIPTION

A. Unless otherwise specified, the Contractor shall obtain and pay for all permits and licenses related to his work, except as otherwise provided herein.

B. Permits by Owner: The Owner prior to the advertisement of the project has applied for permits with the following agencies. The Contractor shall request copies of these permits and shall comply with all provisions therein:

1. FDEP Notification for Constructing a Domestic Wastewater Collection/Transmission System.

C. NPDES Permit: Any site dewatering for structures or trench work under construction shall conform to the requirements of an NPDES permit and CUP permits, if needed. See also Appendix B.

D. Local Permits: The Contractor shall apply and obtain all other applicable local permits for the construction effort including City ROW permits. Payment for such permits, shall be identified by the governing agency after the permit has been applied for, and this amount shall be made known to the Owner for prompt payment by the Owner. This requirement may also include the following tasks to be performed by the Contractor:

1. Pre-stamped and addressed post cards for mailing to subcontractors.
2. Acknowledgment of Applicant Responsibility.
3. Evidence of certification as a Class I or Class II Contractor (State).
4. Copy of Worker's Compensation Certificate of Insurance.
5. Owners' authorization.

E. Work shall be conducted and shall result in construction of the requirements of this project in full accordance with the conditions of the permits granted for the project.

PART 2 - PRODUCTS (NOT USED)

PART 3 - EXECUTION (NOT USED)

END OF SECTION

PAGE INTENTIONALLY LEFT BLANK

SECTION 01090

REFERENCE STANDARDS

PART 1 - GENERAL

1.01 GENERAL

A. Titles of Sections and Paragraphs: Titles and subtitles accompanying specification sections and paragraphs are for convenience and reference only and do not form a part of the Specifications.

B. Applicable Publications: Whenever in these Specifications references are made to published specifications, codes, standards, or other requirements, it shall be understood that wherever no date is indicated, only the latest specifications, standards, or requirements of the respective issuing agencies which have been published as of the date that the Contract is advertised for Bids shall apply; except to the extent that said standards or requirements may be in conflict with applicable laws, ordinances, or governing codes. No requirements set forth in the Specifications or shown on the Drawings will be waived because of any provision of or omission from said standards or requirements.

C. Specialists, Assignments: In certain instances, specification text requires (or implies) that specific WORK is to be assigned to specialists or expert entities who must be engaged to perform that WORK. Such assignments shall be recognized as special requirements over which the CONTRACTOR has no choice or option. These requirements shall not be interpreted so as to conflict with the enforcement of building codes and similar regulations governing the WORK; also they are not intended to interfere with local union jurisdiction settlements and similar conventions. Such assignments are intended to establish which party or entity involved in a specific unit of WORK is recognized as "expert" for the indicated construction processes or operations. Nevertheless, the final responsibility for fulfillment of the entire set of Contract requirements remains with the CONTRACTOR.

1.02 REFERENCE SPECIFICATIONS, CODES, AND STANDARDS

A. The CONTRACTOR shall construct the WORK in accordance with the Contract Documents and the referenced portions of those referenced codes, standards, and specifications.

B. References to "Building Code" or "Florida Building Code" shall mean Florida Building Code of the International Conference of Building Officials (ICBO), as amended by the local jurisdiction. Similarly, references to "Mechanical Code" or "Uniform Mechanical Code," "Plumbing Code" or "Uniform Plumbing Code," "Fire Code" or "Uniform Fire Code," shall mean Uniform Mechanical Code, Uniform Plumbing Code and Uniform Fire Code of the International Association of Plumbing and Mechanical Officials (IAPMO) as amended by the local jurisdiction. "Electric Code" or "National Electric Code (NEC)" shall mean the National Electric Code of the National Fire Protection Association (NFPA). The latest edition of the codes as approved by the Municipal Code and used by the local agency as of the date that the WORK is advertised for Bids shall apply to the WORK herein, including all addenda, modifications, amendments, or other lawful changes thereto.

C. In case of conflict between codes, reference standards, drawings, and the other Contract Documents, the most stringent requirements shall govern. All conflicts shall be brought to the attention of the ENGINEER for clarification and direction prior to ordering or providing any materials or furnishing labor. The CONTRACTOR shall bid for the most stringent requirements.

D. References to "OSHA Regulations for Construction" shall mean Title 29, Part 1926, Construction Safety and Health Regulations, Code of Federal Regulations (OSHA), including all changes and amendments thereto.

E. References to "OSHA Standards" shall mean Title 29, Part 1910, Occupational Safety and

Health Standards, Code of Federal Regulations (OSHA), including all changes and amendments thereto.

1.03 REGULATIONS RELATED TO HAZARDOUS MATERIALS

A. The CONTRACTOR shall be responsible that all WORK included in the Contract Documents, regardless of if indicated or not, shall comply with all EPA, OSHA, RCRA, NFPA, and any other federal, state, and local regulations governing the storage and conveyance of hazardous materials, including petroleum products.

B. Where no specific regulations exist and the OWNER has not waived the requirement in writing, chemical, hazardous, and petroleum product piping and storage in underground locations shall be double containment piping and tanks or be installed in separate concrete trenches and vaults with an approved lining that cannot be penetrated by the chemicals.

PART 2 - PRODUCTS (NOT USED)

PART 3 - EXECUTION (NOT USED)

END OF SECTION

SECTION 01200

PROJECT MEETINGS

PART 1 - GENERAL

1.01 REQUIREMENTS INCLUDED

A. The Engineer will schedule and administer a preconstruction conference. The Contractor shall be responsible for attending all monthly construction progress meetings, and specially called meetings throughout the progress of the work.

B. Representatives of the Contractor, subcontractors and suppliers attending meetings shall be qualified and authorized to act on behalf of the entity each represents.

C. The Owner shall attend meetings to ascertain that Work is expedited consistent with Contract Documents and construction schedules.

1.02 PRECONSTRUCTION CONFERENCE

A. A preconstruction conference shall be scheduled by the Owner and conducted by the Engineer. The Engineer shall prepare and distribute written summary meeting minutes or electronic audio recordings.

B. Location: The location of the conference shall be a central site, designated by the Owner.

C. Attendance Requested:

1. Owner's representative.
2. Resident project representative (RPR).
3. Engineer and their professional consultants.
4. Contractor's representatives.
5. Subcontractor's representatives.
6. Supplier's representatives.
7. Adjacent site neighbors, where appropriate.
8. Others, as appropriate.

D. Suggested Agenda:

1. Introductions and Roles
2. Procedures and processing of:
    a. Requests for Information
    b. Shop Drawings and Submittals
    c. Field Orders
    d. Change Orders
    e. Periodic Pay Estimates

f. As-built drawings

3. Contractor's Use of Premises, Access, Security

4. Construction Schedule and Sequence of Construction

   a. Schedule Submittal Requirements

   b. Permits

   c. Liquidated Damages

5. Special Work Procedure Plans, as applicable

6. Inspections

7. Testing and acceptance requirements

8. Housekeeping procedures

1.03 MONTHLY PROGRESS MEETINGS

A. Construction progress meetings will be scheduled each month for the duration of the project. The progress meetings will be scheduled by the Contractor at times and locations to be mutually agreed upon.

B. Meetings shall be for the purpose of reviewing the completed progress of the Work and any obstacles or problems that could impact the Contractor's Project Schedule. See also Section 01310.

C. Location of the meetings: On site, or at other locations selected by the Contractor with the Owner's consent.

D. Attendance:

1. Engineer and his professional consultants (as needed).

2. Contractor.

3. Owner's representative.

4. Subcontractors (as appropriate to the agenda).

5. Suppliers (as appropriate to the agenda).

6. Others (as appropriate).

E. Suggested Agenda:

1. Review of work progress since previous meeting.

2. Field observations, problems, and conflicts.

3. Problems which impede the Construction Schedule.

4. Review of off-site fabrication and delivery schedules.

5. Corrective measures and procedures to regain projected schedule.

6. Revisions to Construction Schedule.

7. Progress schedule during succeeding work period.
8. Coordination of schedules.
9. Shop Drawing submittals.
10. Maintenance of quality standards.
11. Pending changes and substitutions.
12. Review proposed changes for:
    a. Effect on Construction Schedule and on completion date.
    b. Effect on other contracts of the Project.
13. Other business.
14. Construction Schedule.
15. Critical/long-lead items.

F. The Engineer shall lead each construction progress meeting and shall review all previous work efforts to construct the meeting agenda in order to be prepared to discuss pertinent topics regarding progress of the Work.

G. The Engineer is to provide a current Shop Drawing submittal log at each progress meeting in accordance with Section 01340.

H. The Engineer shall distribute summary written minutes or a clear, complete electronic audio recording of each progress meeting to all attendees after the meeting. All meeting summaries are ultimately subject to the approval of the Owner.

PART 2 - PRODUCTS (NOT USED)

PART 3 - EXECUTION (NOT USED)

END OF SECTION

PAGE INTENTIONALLY LEFT BLANK

SECTION 01310

CONSTRUCTION SCHEDULE

PART 1 - GENERAL

1.01 DESCRIPTION

A. Prepare and provide the projected construction schedule, updated monthly, for the duration of the project. **All schedules and all updates must be prepared using Microsoft Office Project, latest edition. Other scheduling software programs may be used, but only if their products are fully compatible with and can be directly imported into Microsoft Office Project.** It shall be the Contractor's responsibility to ensure compatibility. Schedules prepared by other means that cannot be imported by the Owner without modification will be rejected. See also Section 00700, Article 2.5 and Article 14.

B. Within ten (10) calendar days of the Notice to Proceed, the Contractor shall submit a Summarized Milestone Schedule to the Owner and Engineer for approval. The Contractor shall revise the schedule as necessary to gain Owner and Engineer approval. Within 14 calendar days of the Owner's and Engineer's approval of the Summarized Milestone Schedule, the Contractor shall submit the Detailed Project Task Schedule. The Contractor shall similarly revise this schedule as needed to gain Owner and Engineer approval. Once approved, this schedule will be the baseline from which all construction activities will be measured.

C. No Periodic Pay Estimates will be accepted until both the Summarized Milestone Schedule and the corresponding Detailed Project Task Schedule updates are approved by the Owner and Engineer.

D. Coordination:

1. It will be the responsibility of the Contractor to coordinate schedules of its own and its subcontractor's schedules as well as construction efforts by others as directed by the Owner or Engineer.

2. Schedules are subject to concurrence by the Owner and Engineer with regards to activity description, logic, sequence, duration and resources required.

1.02 FORM OF SCHEDULES

A. Contractor shall prepare and provide the following construction schedules in the Microsoft Office Project default Gantt Chart view, with project tasks on the left side of the view and horizontal graphical bars corresponding to the task durations on the right side of the view.

1. Summarized Milestone Schedule: Submit a Microsoft Office Project schedule broken down by the major project areas. Required critical path elements will be subject to Owner's and Engineer's concurrence.

2. Detailed Project Task Schedule: Construction schedule and subsequent monthly updates must indicate critical path elements, detailed project tasks and links between dependent tasks, including the duration of each task.

1.03 CONTENT OF SCHEDULES

A. Provide complete sequence of construction by activity.

1. Shop Drawings, product data and samples, submittal dates and dates approved copies will be required, etc., should be indicated.

2. Product procurement, fabrication duration, shipping dates and on site availability should be indicated. Contractor will prepare format which shall include names of subcontractors;

description of material; manufacturers and vendors with address, phone number and person to contact, order number, shop drawings and samples status, manufacturing lead time, shipping dates, proposed delivery date, format of shipping, date material is required and commitments from manufacturers or vendors on their letterhead.

3. Dates for beginning and completion of each element or task of construction.

4. Decision dates for selection of finishes and products.

5. Restraints reflecting impact of related work.

6. Activities as directed by the Owner or Engineer when required to interface activities performed by the Owner or other Contractors.

7. Detailed sub schedule and special area schedules as directed by the Owner or Engineer to define critical areas of work.

8. The Engineer shall receive and review updates from the Contractor each month indicating the ACTUAL work status or more/less often when directed to do so by the Engineer.

   a. Schedule submission shall be made with the Periodic Pay Estimate. See also Section 01027.

   b. If the Contractor does not gain Owner and Engineer approval of any schedule update, the following Periodic Pay Estimate will not be considered until such approval is obtained.

1.04 CONTRACTOR'S RESPONSIBILITIES

A. Coordinate the scheduled work of all its subcontractors.

B. Incorporate the work of all subcontractors into the construction schedules.

C. Provide schedule update information of all subcontractors.

D. Maintain a management organization to fulfill the requirements of this Section.

E. Attend and participate in scheduling meetings as may be requested by the Owner or Engineer.

1.05 SCHEDULE MAINTENANCE PROCEDURES

A. At or before the Pre-Construction Meeting, provide a preliminary summary bar chart schedule for the major breakdown activities outlined in the Bid Proposal. Critical path items will be discussed using this preliminary schedule at the Pre-Construction Meeting.

B. Summarized Milestone Schedule: Within 10 calendar days of Notice to Proceed, the Contractor shall provide the following to the Owner and Engineer:

   1. A Summarized Milestone Schedule, prepared in Microsoft Office Project Gantt Chart format, identifying the major areas of the Project. The Summarized Milestone Schedule shall, as a minimum, identify all established milestones specified in the Contract Documents and agreed to at the Pre-Construction Meeting, to constitute one complete program for the entire work.

   2. The Summarized Milestone Schedule shall be used for the life of the Contract to delineate the interdependence and order of construction of the project Work areas. Also, it shall be employed as a framework for developing the Detailed Project Task Schedule described below.

   3. The Owner reserves the right to reject any submitted schedule by the Contractor, if, in the view of the Owner, said schedule reflects unreasonable assumptions on the part of the Contractor, its subcontractors or Owner's other Contractors. The Contractor shall be

responsible for resubmitting within five (5) working days the actual reflection of current and projected status.

4. This schedule shall include an overall project duration consistent with the specified contract time and the date of the official Notice to Proceed. Schedules with any but the specified contract duration period will not be accepted.

5. In determining the critical path for the work, the Contractor shall include in the schedule some consideration for a minimum number of days of float due to inclement weather or other delays normally associated with construction work of this nature. The amount of float included should be based upon project duration. Since some or even most of the work will be performed outdoors, weather float is an important factor which may have a significant impact on the critical path of the project.

C. Detailed Project Task Schedule: Within 14 calendar days of Owner's and Engineer's approval of the Summarized Milestone Schedule, the Contractor shall provide the following:

1. A Detailed Project Task Schedule shall be prepared in Microsoft Office Project Gantt Chart format. The Detailed Project Task Schedule shall identify the work, by task and duration, to be performed in order to support the critical path milestones agreed to. It shall also identify links between dependent tasks, indicating the expected duration of each.

2. The Detailed Project Task Schedule shall be utilized to monitor progress and shall, therefore, be maintained throughout the duration of the Project.

3. Activities represented on the Detailed Project Task Schedule shall dovetail the Summarized Milestone Schedule so as to constitute one complete program for the whole of the project.

4. The Contractor shall provide a detailed successor/predecessor report, in a format acceptable to the Engineer, sorted by major project area. This report shall also include the duration of each activity and logic relationship.

D. Updating:

1. Show all changes which have occurred since the previous update and submittal. Provide the following update information:

   a. Progress of each activity.

   b. Completion dates.

   c. Activities modified.

   d. Revision of schedule restraints.

   e. Revision in duration to any activities.

2. With each schedule update provide a NARRATIVE REPORT, including:

   a. Discussion of problem areas, including current and anticipated delay factors and their impact on the schedule.

   b. Corrective action taken or proposed and its effect or intended effect on schedule.

   c. Detailed description of revisions to schedule.

1.06 SUBMITTALS

A. Submit to both the Owner and the Engineer one electronic file copy, via e-mail attachment, of the

Summarized Milestone Schedule within 10 days after Notice to Proceed.

B. Submit to both the Owner and the Engineer one electronic file copy, via e-mail attachment, of the Detailed Project Task Schedule within 14 calendar days of approval of the Summarized Milestone Schedule.

C. Each month, (along with the signed original copies of the monthly Periodic Pay Estimate), submit one printed copy of the previous Detailed Project Task Schedule, with annotations showing status and changes, and one printed copy of the Detailed Project Task Schedule updated for the close of that month to indicate the planned schedule for the next period. In addition, besides the printed copy, provide to both the Owner and the Engineer one electronic file copy of the updated Detailed Project Task Schedule via e-mail attachment.

D. Along with the updated schedule, submit:

1. A NARRATIVE REPORT explaining modifications.

PART 2 - PRODUCTS (NOT USED)

PART 3 - EXECUTION (NOT USED)

END OF SECTION

SECTION 01340

SHOP DRAWINGS

PART 1 - GENERAL

1.01 DESCRIPTION

A. Scope of Work:

1. The Contractor shall submit to the Engineer for review, shop drawings, test reports and data on materials and equipment (hereinafter in this article called data), and material samples (hereinafter in this article called samples) as are required for materials and equipment to be supplied by the Contractor as required by the Specifications and the Contract Drawings.

2. Within ten (10) calendar days of the Notice to Proceed, the Contractor shall submit to the Engineer a complete list of preliminary data on items for which Shop Drawings are to be submitted. Included in this list shall be the names of all proposed manufacturers furnishing specified items. Review of this list by the Engineer shall in no way expressed or implied relieve the Contractor from submitting complete Shop Drawings and providing materials, equipment, etc., fully in accordance with the Specifications.

3. The Contractor is to maintain an accurate updated submittal log and will bring this log to each scheduled progress meeting with the Owner and the Engineer. This log should include the following items:

   a. Submittal-Description and Number assigned.

   b. Date to Engineer.

   c. Date returned to Contractor (from Engineer).

   d. Status of Submittal:

      1) NO EXCEPTIONS TAKEN

      2) MAKE CORRECTIONS NOTED

      3) MAKE CORRECTIONS NOTED - CONFIRM

      4) AMEND - RESUBMIT

      5) REJECTED - RESUBMIT

      6) NOT REVIEWED

   e. Date of Resubmittal and Return (as applicable).

   f. Date material release (for fabrication).

   g. Projected date of fabrication.

   h. Projected date of delivery to site.

   i. Status of O&M manuals submittal.

   j. Contract Specification Section title and number.

   k. Contract Drawing Number(s).

1.02 CONTRACTOR'S RESPONSIBILITY

A. It is the responsibility of the Contractor to check all drawings, data and samples prepared before submitting them to the Engineer for review. Each and every copy of the Drawings and data shall bear Contractor's shop drawing stamp showing that they have been so checked, (Refer to **Figure 01340-1,** Contractor's Shop Drawing Stamp). Shop drawings submitted to the Engineer without the Contractor's stamp will be returned without review to the Contractor for conformance with this requirement. **Shop drawings shall indicate any deviations in the submittal from requirements of the Contract Documents. If the Contractor takes exception to the specifications, the Contractor shall note the exception in the letter of transmittal to the Engineer. However, shop drawing submittals shall not be used as a vehicle for requesting approval of substitute or alternative equipment and materials.** Substitution requests will be considered only when submitted in accordance with the applicable provisions provided elsewhere in these Contract Documents.

B. Determine and verify:

4. Field measurements.

5. Field construction criteria.

6. Catalog numbers and similar data.

7. Conformance with Specifications.

Figure 01340-1

(OWNER'S NAME)
(PROJECT NAME)

SHOP DRAWING NO.: _____
SPECIFICATION SECTION: _____

WITH RESPECT TO THIS SHOP DRAWING OR SAMPLE, I HAVE DETERMINED AND VERIFIED ALL QUANTITIES, DIMENSIONS, SPECIFIED PERFORMANCE CRITERIA, INSTALLATION REQUIREMENTS, MATERIALS, CATALOG NUMBERS, AND SIMILAR DATA WITH RESPECT THERETO AND REVIEWED OR COORDINATED THIS SHOP DRAWING OR SAMPLE WITH OTHER SHOP DRAWINGS AND SAMPLES AND WITH THE REQUIREMENTS OF THE WORK AND THE CONTRACT DOCUMENTS.

~ NO VARIATION FROM CONTRACT DOCUMENTS
~ VARIATION FROM CONTRACT DOCUMENTS AS SHOWN

(CONTRACTOR'S NAME)

(CONTRACTOR'S ADDRESS)

BY: _____ DATE: _____

(AUTHORIZED SIGNATURE)

C. Within twenty (20) days of the Notice to Proceed, the Contractor shall furnish the Engineer a schedule of Shop Drawing submittals fixing the respective dates for the submission of shop and working drawings, the beginning of manufacture, testing and installation of materials, supplies and equipment. This schedule shall indicate those that are critical to the progress schedule.

D. The Contractor shall not begin any of the work covered by a drawing, data, or a sample returned for correction until a revision or correction thereof has been reviewed and returned to them by the Engineer with approval.

E. The Contractor shall submit to the Engineer and Design Engineer all drawings and schedules sufficiently in advance of construction requirements to provide no less than thirty (30) calendar days for checking and appropriate action from the time the Engineer receives them.

F. All submittals shall be accompanied with a transmittal letter prepared in duplicate containing the following information:

8. Date

9. Project Title and Number

10. Contractor's name and address

11. The number of each Shop Drawing submitted.

12. Notification of Deviations from Contract Documents.

13. Submittal Log Number referencing the Specification Section Number.

a. **The numbering system shall be specification section number followed by a 1 for original submittal, 1A for first resubmittal and so forth, (for example: 15050-1, 15050-1A, 15050-1B)**

G. The Contractor shall submit three (3) copies of descriptive or product data information and shop drawings plus the number of copies, which the Contractor requires, returned. All shop drawings shall be a maximum of 24-inch by 36-inch in size.

H. The Contractor shall be responsible for and bear all costs of damages which may result from the ordering of any material, or from proceeding with any part of work, prior to the completion of the review by Engineer of the necessary Shop Drawings.

I. The Contractor shall be fully responsible for observing the need for and making any changes in the arrangement of piping, connections, wiring, manner of installation, etc., which may be required by the materials/equipment they proposed to supply both as pertains to their own work and any work affected under other parts, headings, or divisions of the Contract Documents.

1.03 ENGINEER'S REVIEW OF SHOP DRAWINGS

A. Review by the Engineer of drawings, data and samples submitted by the Contractor will cover only general conformity to the Specifications, Owner’s Criteria, external connections, and dimensions which affect the installation. The Engineer's review and exceptions, if any, will not constitute an approval of dimensions, quantities, and details of the material, equipment, device, or item shown.

B. The review of drawings and schedules will be general, and shall not be construed

C.

14. as permitting any departure from the Contract requirements;

15. as relieving the Contractor of responsibility for any errors, including details, dimensions, and materials;

16. as approving departures from details furnished by the Engineer except as otherwise provided herein.

D. If the drawings or schedules as submitted describe variations or show a departure from the

Contract requirements or Owner's Criteria which Engineer finds to be in the interest of the Owner and to be so minor as not to involve a change in Contract Price or time for performance, the Engineer may return the reviewed drawings without noting an exception. Such deviations must be indicated by the Contractor as a variation or departure from the requirement of the Contract Documents.

E. When reviewed by the Engineer, each of the Shop Drawings will be identified as having received such review being so stamped and dated. Shop Drawings stamped "REVIEWED, COMMENTS AS NOTED" OR "REJECTED, REVISE AND RESUBMIT" and with required corrections shown will be returned to the Contractor for correction and resubmittal.

F. Resubmittals will be handled in the same manner as first submittals. On resubmittals the Contractor shall direct specific attention, in writing or on resubmitted Shop Drawings, to revisions other than the corrections requested by the Engineer on previous submissions. The Contractor shall address and make any corrections required by the Engineer.

G. If the Contractor considers any correction indicated on the drawings to constitute a change to the Contract Drawings or Specifications, the Contractor shall immediately give written notice thereof to the Engineer.

H. **Shop drawings and submittal data shall be reviewed by the Engineer for each original submittal and first resubmittal; thereafter review time for subsequent resubmittals shall be charged to the Contractor in accordance with the terms of the Engineer's Agreement with the Owner.**

I. When the Shop Drawings have been completed to the satisfaction of the Engineer, the Contractor shall carry out the procurement and construction in accordance therewith and shall make no further changes therein except upon written instructions from the Engineer.

J. No partial submittals will be reviewed. Submittals not complete will be returned to the Contractor for resubmittal.

K. All drawings, schematics, manufacturer's product data, certifications and other shop drawing submittals required by a system specification shall be submitted at one time as a package to facilitate interface checking.

1.04 SHOP DRAWINGS

A. When used in the Contract Documents, the term "Shop Drawings" shall be considered to mean Contractor's plans for materials and equipment, which become an integral part of the Project. These drawings shall be complete and detailed. Shop Drawings shall consist of fabrication, erection and setting drawings, manufacturer's scale drawings, and wiring and control diagrams. Cuts, catalogs, pamphlets, descriptive literature, and performance and test data shall be considered only as supportive to required Shop Drawings as defined above. As used herein, the term "manufactured" applies to standard units usually mass-produced; and "fabricated" means items specifically assembled or made out of selected materials to meet individual design requirements.

17. The Contractor shall not reproduce the Engineer's project drawings for shop drawings without written approval of the Engineer.

B. Manufacturer's catalog sheets, brochures, diagrams, illustrations and other standard descriptive data shall be clearly marked to identify pertinent materials, product or models. **Delete information, which is not applicable to the Work, by striking or cross-hatching.**

C. Drawings and schedules shall be checked and coordinated with the work of all trades involved, before they are submitted for review by the Engineer and shall bear the Contractor's stamp of approval as evidence of such checking and coordination. Drawings or schedules submitted

without this stamp of approval shall be returned to the Contractor for resubmission.

D. Each Shop Drawing shall have a blank area 6-inches by 2 1/2-inches, located adjacent to the title block. The title block shall display the following:

18. Project Title and Number.

19. Name of project building or structure.

20. Number and title of the shop drawing.

21.

22. Date of shop drawing or revision.

23. Name of contractor and subcontractor submitting drawing.

24. Supplier/distributor/manufacturer.

25. Separate detailer when pertinent.

26. Contract Specification Section title and number.

27. Contract Drawing Number.

E. If drawings show variations from Contract requirements because of standard shop practice or for other reasons, the Contractor shall describe such variations in their letter of transmittal. If acceptable, proper adjustment in the Contract shall be implemented where appropriate. If the Contractor fails to describe such variations, they shall not be relieved of the responsibility for executing the work in accordance with the Contract, even though such drawings have been reviewed.

F. Data on materials and equipment shall include, without limitation, materials and equipment lists, catalog data sheets, cuts, performance curves, diagrams, verification of conformance with applicable standards or codes, materials of construction and similar descriptive material. Materials and equipment lists shall give, for each item thereon, the name and location of the supplier or manufacturer, trade name, catalog reference, size, finish and all other pertinent data.

G. For all mechanical and electrical equipment furnished, the Contractor shall provide a list including the equipment name, and address and telephone number of the manufacturer's representative and service company so that service and/or spare parts can be readily obtained.

H. All manufacturers or equipment suppliers who propose to furnish equipment or products shall submit an installation list to the Engineer along with the required shop drawings. The installation list shall include at least five (5) installations where identical equipment has been installed and has been in operation for a period of at least one (1) year.

I. Only the Engineer will utilize the color "red" in marking Shop Drawing submittals.

1.05 WORKING DRAWINGS

A. When used in the Contract Documents, the term "working drawings" shall be considered to mean the Contractor's plan for temporary structures such as temporary bulkheads, support of open cut excavation, support of utilities, ground water control systems, forming and falsework, for underpinning, and for such other work as may be required for construction but does not become an integral part of the Project.

B. Copies of working drawings shall be submitted to the Engineer where required by the Contract Documents or requested by the Engineer, and shall be submitted at least thirty (30) calendar days (unless otherwise specified by the Engineer) in advance of their being required for work.

C. Working drawings shall be signed by a registered Professional Engineer, currently licensed to practice in the State of Florida and shall convey, or be accompanied by, calculation or other sufficient information to completely explain the structure, machine, or system described and its intended manner of use. Prior to commencing such work, working drawings must have been reviewed without specific exceptions by the Engineer, which review will be for general conformance and will not relieve the Contractor in any way from their responsibility with regard to the fulfillment of the terms of the Contract. All risks to new or existing work are assumed by the Contractor; the Owner and Engineer shall have no responsibility therefor.

1.06 SAMPLES

A. The Contractor shall furnish, for the approval of the Engineer, samples required by the Contract Documents or requested by the Engineer. Samples shall be delivered to the Engineer as specified or directed. The Contractor shall prepay all shipping charges on samples. Materials or equipment for which samples are required shall not be used in work until approved by the Engineer.

B. Samples shall be of sufficient size and quantity to clearly illustrate:

28. Functional characteristics of the product, with integrally related parts and attachment devices.

29. Full range of color, texture and pattern.

30. A minimum of two samples of each item shall be submitted.

C. Each sample shall have a label indicating:

31. Name of Project.

32. Name of Contractor and Subcontractor

33.

34. Material or Equipment Represented.

35. Place of Origin.

36. Name of Producer and Brand (if any).

37. Location in Project.

38. Submittal number.

    a. (Samples of finished materials shall have additional marking that will identify them under the finished schedules).

D. The Contractor shall prepare a transmittal letter in triplicate for each shipment of samples. They shall enclose a copy of this letter with the shipment and send a copy of this letter to the Engineer. Approval of a sample shall be only for the characteristics or use named in such approval and shall not be construed to change or modify any Contract requirements.

E. Approved samples not destroyed in testing shall be sent to the Engineer or stored at the site of the work. Approved samples of the hardware in good condition will be marked for identification and may be used in the work. Materials and equipment incorporated in work shall match the approved samples. Samples, which failed testing or were not approved, will be returned to the Contractor, who shall bear the expense, if so requested at time of submission.

PART 2 - PRODUCTS (NOT USED)

PART 3 - EXECUTION (NOT USED)

END OF SECTION

PAGE INTENTIONALLY LEFT BLANK

SECTION 01370

SCHEDULE OF VALUES

PART 1 - GENERAL

1.01 REQUIREMENTS INCLUDED

A. The Contractor shall submit to the Engineer a detailed Schedule of Values allocated to the various portions of the work, within 10 days after date of Notice to Proceed.

B. Upon request of the Engineer, the Contractor shall support the individual values with data which will substantiate their correctness.

C. The Schedule of Values shall be used by the Owner only as the basis for preparing the Contractor's Applications for Payment, called a Periodic Pay Estimate.

1.02 RELATED REQUIREMENTS

A. Conditions of the Contract.

B. Request for Payment.

1.03 FORM AND CONTENT OF SCHEDULE OF VALUES

A. Contractor's standard forms and automated printout will be considered for approval by Engineer upon Contractor's request. Identify schedule with:

1. Title of Project and location.
2. Project number.
3. Name and address of Contractor.
4. Contract designation.
5. Date of submission.

B. Schedule shall list the installed value of the component parts of the work in sufficient detail to serve as a basis for computing values for progress payments during construction.

C. Follow the table of contents for the Contract Document as the format for listing component items for structures:

1. Identify each line item with the number and title of the respective major section of the specification.
2. For each line item, list sub-values of major products or operations under item.

D. The sum of all values listed in the schedule shall equal the total Contract Sum.

1.04 SUBSCHEDULE OF UNIT MATERIAL VALUES

A. Submit a sub-schedule of unit costs and quantities for products on which progress payments will be requested for stored products.

B. The form of submittal shall parallel that of the Schedule of Values with each item identified the same as the line item in the Schedule of Values.

C. The unit quantity for bulk materials shall include an allowance for normal waste.

D. The installed unit value multiplied by the quantity listed shall equal the cost of that item in the

Schedule of Values.

PART 2 - PRODUCTS (NOT USED)

PART 3 - EXECUTION (NOT USED)

END OF SECTION

SECTION 01450

QUALITY CONTROL

PART 1 - GENERAL

1.01 SECTION INCLUDES

A. Quality control, quality assurance

1.02 QUALITY CONTROL

A. It is the Contractor's responsibility to perform all work to a degree and in a manner that satisfies and complies with the Project requirements. In order to fulfill this responsibility, the Contractor is required to have an approved Quality Control Program, including testing, as part of his Contract work in accordance with the Contract Documents and to submit details of his Program to the Engineer for review and approval prior to commencing any construction operations. The submittal shall include detailed information on locations and number of all tests, etc., that will be necessary for the Contractor to make his own determination that the work is being performed in compliance with the Project requirements.

B. As part of the Contractor’s Quality Control Program included as part of his work, the Contractor shall employ and pay for an independent, approved soils testing laboratory to perform testing services outlined in these Contract Documents.

C. The Contractor's Quality Control Program shall include, but not be limited to, the following in addition to the type and frequency of tests as required by the technical specifications:

1. Piping and structural excavation, bedding and backfill materials and density quality control testing.

2. Determination of compactive effort needed for compliance with the density requirements.

3. Portland cement concrete and asphalt paving quality control testing including design mix review, materials, field slump and air content, and field and lab cured strength samples and testing.

D. In addition to Quality Control Testing, the Contractor shall be responsible for required testing or approvals for any work (or any part thereof) if laws or regulations of any public body having jurisdiction specifically require testing, inspections or approval. The Contractor shall pay all costs in connection therewith and shall furnish the Engineer the required certificates of inspection, testing or approval. The Contractor shall also be responsible for and shall pay all costs in connection with any inspection or testing required in connection with Owner or Engineer acceptance of a supplier of materials or equipment proposed to be incorporated into the work.

E. Any design or testing laboratory utilized by the CONTRACTOR shall be an independent laboratory acceptable to the OWNER and the ENGINEER, approved in writing, and complying with the latest edition of the "Recommended Requirements for Independent Laboratory Qualification", published by the American Council of Independent Laboratories.

F. Testing laboratories, whether provided by the OWNER or the CONTRACTOR, shall promptly notify the ENGINEER and the CONTRACTOR of irregularities or deficiencies of work, which are observed during performance of services. Laboratories shall submit two (2) copies of all reports directly to the ENGINEER and two (2) copies to the CONTRACTOR.

1.03 QUALITY ASSURANCE

A. In addition to the services provided by the laboratory paid for by the Contractor as a part of his work, the Owner, at his sole discretion, may employ an additional independent soils laboratory as part of Owner's Quality Assurance Program to verify that the work meets the requirements of the

Contract Documents. The Owner furnished Quality Assurance testing may include the type and frequency of tests as required by the technical specifications. The Owner reserves the right to have additional tests made beyond those specified in the Contract Documents. The Contractor shall cooperate with the Owner and make the work and samples available for Owner testing at no additional cost in case the Owner chooses to have additional Owner furnished testing performed. It is the sole responsibility of the Contractor to see that his work meets all provisions of the Contract Documents.

B. The CONTRACTOR shall cooperate with the soils laboratory personnel and provide access to the work to be tested. The CONTRACTOR shall notify the Engineer and Owner's testing laboratory sufficiently in advance of operations to allow scheduling of tests. The CONTRACTOR shall furnish casual labor and facilities to obtain and handle samples at the site and to store and cure test samples as required.

1.04 TESTING OF MATERIALS

A. Unless otherwise specified, all materials shall be sampled and tested in accordance with the latest published standard methods of ASTM in effect at the time bids are received. If no ASTM Standards apply, applicable standard methods of the Federal Government or of other recognized agencies shall be used.

B. Test of materials shall be made by a representative of the Contractor, unless otherwise provided. Testing of equipment shall be the responsibility of the CONTRACTOR or an authorized manufacturer's representative. All test results shall be furnished to the ENGINEER in writing. The CONTRACTOR shall provide facilities required to collect and forward samples. The CONTRACTOR shall furnish the required samples without charge.

C. The CONTRACTOR shall not make use of or incorporate in the work, the materials represented by the sample until tests have been made and the material found to be in accordance with the requirements of the Specifications.

D. Materials to be tested and the applicable test procedure shall be as outlined in the individual sections of these Specifications.

1.05 SOURCE AND QUALITY OF MATERIALS AND EQUIPMENT

A. The source of materials to be used shall be in accordance with the Contract Documents and as approved by the ENGINEER before delivery. The approval of the source of any material shall continue as long as the material conforms to the Specifications.

B. All material not conforming to the requirements of the Specifications shall be considered as defective and shall be removed from the work. If in place, faulty materials shall be removed by the CONTRACTOR at his expense and replaced with acceptable material unless permitted otherwise by the OWNER. No defective materials which have been subsequently corrected shall be reused until approval has been given.

C. Upon failure of the CONTRACTOR to comply immediately with any order of the ENGINEER to remove and replace defective material, the OWNER shall have authority to remove and replace defective materials, and to deduct the cost of removal and replacement from any monies due or to become due to the CONTRACTOR. Failure to reject any defective materials or work at the time of installation shall in no way prevent later rejection when such defects are discovered, nor obligate the OWNER to final acceptance.

1.06 ADDITIONAL TESTING

A. In addition to soils laboratory and materials testing, the Contractor shall perform other testing called for in the Contract Documents including but not limited to piping, pressure, leakage, infiltration and exfiltration, as appropriate.

PART 2 - PRODUCTS (NOT USED)

PART 3 - EXECUTION (NOT USED)

END OF SECTION

PAGE INTENTIONALLY LEFT BLANK

SECTION 01530

PROTECTION OF EXISTING FACILITIES

PART 1 - GENERAL

1.01 GENERAL

A. The Contractor shall protect all existing facilities, including all utilities and improvements not designated for removal, and shall restore damaged or temporarily relocated utilities and improvements to a condition equal to or better than prior to such damage or temporary relocation, all in accordance with the Contract Documents.

1.02 EXISTING UTILITIES AND IMPROVEMENTS

A. General: The Contractor shall protect both aboveground and underground utilities and other improvements which may be impaired during construction operations, regardless of whether or not the utilities are indicated on the Drawings. The Contractor shall take all possible precautions for the protection of unforeseen utility lines to provide for uninterrupted service and to provide such special protection as may be necessary.

B. Except where the Drawings indicate utilities have been field located during design or certain utility locations shall be exposed as part of the Work, the Contractor shall be responsible for exploratory excavations as it deems necessary to determine the exact locations and depths of utilities which may interfere with its work. All such exploratory excavations shall be performed as soon as practicable after Notice to Proceed and, in any event, a sufficient time in advance of construction to avoid possible delays to the Contractor's progress. When such exploratory excavations show the utility location as shown on the Drawings to be in error, the Contractor shall so notify the Engineer.

C. The number of exploratory excavations required shall be that number which is sufficient to determine the alignment and grade of the utility.

D. Utilities to be Moved: In case it shall be necessary to move the property of any public utility or franchise holder, such utility company or franchise holder will, upon request of the Contractor, be notified by the Owner to move such property within a specified reasonable time. When utility lines that are to be removed are encountered within the area of operations, the Contractor shall notify the Engineer a sufficient time in advance for the necessary measures to be taken to prevent interruption of service.

E. Utilities to be Removed: Where the proper completion of the Work requires the temporary or permanent removal and/or relocation of an existing utility or other improvement which is indicated, the Contractor shall remove and, without unnecessary delay, temporarily replace or relocate such utility or improvement in a manner satisfactory to the Engineer and the Owner of the facility. In all cases of such temporary removal or relocation, restoration to the former location shall be accomplished by the Contractor in a manner that will restore or replace the utility or improvement as nearly as possible to its former locations and to as good or better condition than found prior to removal.

F. Owner's Right of Access: The right is reserved to the Owner and to the owners of public utilities and franchises to enter at any time upon any public street, alley, right-of-way, or easement for the purpose of making changes in their property made necessary by the Work of this Contract.

G. Underground Utilities Indicated: Existing utility lines that are indicated or the locations of which are made known to the Contractor prior to excavation and that are to be retained, and all utility lines that are constructed during excavation operations shall be protected from damage during excavation and backfilling and, if damaged, shall be immediately repaired or replaced by the Contractor, unless otherwise repaired by the owner of the damaged utility. If the owner of the

damaged facility performs its own repairs, the Contractor shall reimburse said owner for the costs of repair.

H. Underground Utilities Not Indicated: In the event that the Contractor damages existing utility lines that are not indicated or the locations of which are not made known to the Contractor prior to excavation, a verbal report of such damage shall be made immediately to the Engineer and a written report thereof shall be made promptly thereafter. The Engineer will immediately notify the owner of the damaged utility. If the Engineer is not immediately available, the Contractor shall notify the utility owner of the damage. If directed by the Engineer, repairs shall be made by the Contractor under the provisions for changes and extra work contained in Articles 10, 11, and 12 of the General Conditions.

I. Costs of locating and repairing damage not due to failure of the Contractor to exercise reasonable care, and removing or relocating such utility facilities not indicated in the Contract Documents with reasonable accuracy, and for equipment on the project which was actually working on that portion of the Work which was interrupted or idled by removal or relocation of such utility facilities, and which was necessarily idled during such Work will be paid for as extra Work in accordance with the Contract Documents.

J. Approval of Repairs: All repairs to a damaged utility or improvement are subject to inspection and approval by an authorized representative of the utility or improvement owner before being concealed by backfill or other Work.

K. Maintaining in Service: Unless indicated otherwise, oil and gasoline pipelines, power, and telephone or the communication cable ducts, gas and force mains, irrigation lines, sewer lines, storm drain lines, poles, and overhead power and communication wires and cables encountered along the line of the Work shall remain continuously in service during all the operations under the Contract, unless other arrangements satisfactory to the Engineer are made with the owner of said pipelines, duct, main, irrigation line, sewer, storm drain, pole, or wire or cable. The Contractor shall be responsible for and shall repair all damage due to its operations, and the provisions of this Section shall not be abated even in the event such damage occurs after backfilling or is not discovered until after completion of the backfilling.

1.03 LAWN AREAS

A. Lawn or landscaped areas damaged during construction shall be repaired to match the pre-construction condition to the satisfaction of the landowner and the Owner.

1.04 NOTIFICATION BY THE CONTRACTOR

A. The Contractor must contact “Sunshine State One Call” at (800) 432-4770 a minimum of 48 business hours prior to excavation. The Contractor shall provide the Sunshine State One Call verification number for the project to the Owner.

PART 2 - PRODUCTS (NOT USED)

PART 3 - EXECUTION (NOT USED)

END OF SECTION

SECTION 01545

CUTTING AND PATCHING

PART 1 - GENERAL

1.01 DESCRIPTION

A. Scope of Work: Contractor shall be responsible for all cutting, fitting and patching, including all pipes, conduits, steel, concrete, pavement, or other materials, and attendant excavation and backfill, required to complete the Work or to:

1. Make its several parts fit together properly.
2. Uncover portions of the Work to provide for installation of ill-timed work.
3. Remove and replace defective work.
4. Remove and replace work not conforming to requirements of Contract Documents.
5. Remove samples of installed work as specified for testing.
6. Provide routine penetrations of non-structural surfaces for installation of piping and electrical conduit.

1.02 SUBMITTALS

A. Submit a written request to the Engineer at least 10 days prior to executing any cutting or alteration which affects:

1. Work of the Owner or any separate contractor.
2. Structural value or integrity of any element of the Project.
3. Integrity or effectiveness of weather-exposed or moisture-resistant elements or systems.
4. Efficiency, operational life, maintenance or safety of operational elements.
5. Visual qualities of sight-exposed elements.

B. Request shall include:

1. Identification of the Project.
2. Description of affected work.
3. The necessity for cutting, alteration or excavation.
4. Effect on work of Owner or any separate contractor, or on structural or weatherproof integrity of Project.
5. Description of proposed work:
    a. Scope of cutting, patching, alteration, or excavation.
    b. Trades who will execute the work.
    c. Products proposed to be used.
    d. Extent of refinishing to be done.

6. Alternatives to cutting and patching.

7. Cost proposal, when applicable.

8. Written permission or any separate contractor whose work will be affected.

C. Submit written notice to the Engineer designating the date and the time the work will be uncovered.

PART 2 - PRODUCTS

2.01 MATERIALS

A. Comply with specifications and standards for each specific product involved.

PART 3 - EXECUTION

3.01 INSPECTION

A. Inspect existing conditions of Project, including elements subject to damage or to movement during cutting and patching.

B. After uncovering work, inspect conditions affecting installation of products, or performance of work.

C. Report unsatisfactory or questionable conditions to the Engineer in writing; do not proceed with work until the Engineer has provided further instructions.

3.02 PREPARATION

A. Provide adequate temporary support as necessary to assure structural value or integrity of affected portion of Work.

B. Provide devices and methods to protect other portions of project from damage.

C. Provide protection from elements for that portion of the project which may be exposed by cutting and patching work, and maintain excavations free from water.

3.03 PERFORMANCE

A. Execute cutting and demolition by methods which will prevent damage to other work, and will provide proper surfaces to receive installation of repairs.

B. Execute excavating and backfilling by methods which will prevent settlement or damage to other work.

C. Employ original installer or fabricator to perform cutting and patching for:

1. Weather-exposed or moisture-resistant elements.

2. Sight-exposed finished surfaces.

D. Execute fitting and adjustment of products to provide a finished installation to comply with specified products, functions, tolerances and finishes.

E. Restore work which has been cut or removed; install new products to provide completed Work in accord with requirements of the Contract Documents.

F. Fit work airtight or watertight, as applicable, to pipes, sleeves, ducts, conduit and other penetrations through surfaces or structures.

G. Refinish entire surfaces as necessary to provide an even finish to match adjacent finishes:

1. For continuous surfaces, refinish to nearest intersection.

2. For an assembly, refinish entire unit.

3.04 GENERAL RESTORATION

A. The restoration of existing roadway paving, including underdrains if any are encountered and broken into, shall be restored by the Contractor and shall be replaced or rebuilt using the same type of construction as was in the original. The Contractor shall be responsible for restoring all such work, including subgrade and base courses where present. The Contractor shall obtain and pay for at Contractor's own expense such local or other governmental permits as may be necessary for the opening of roadways and shall satisfy himself as to any requirements, other than those herein set forth, which may affect the type, quality and manner of carrying on the restoration of surfaces by reason of local jurisdiction or other such governmental bodies.

B. This Section does not describe the specifications applicable to the construction of new road surfaces or the complete resurfacing of existing pavements.

END OF SECTION

PAGE INTENTIONALLY LEFT BLANK

SECTION 01600

MATERIAL AND EQUIPMENT

PART 1 - GENERAL

1.01 DESCRIPTION

A. Scope of Work: Material and equipment incorporated into the Work:

1. Conform to applicable specifications and standards.

2. Comply with size, make, type and quality specified, or as specifically approved in writing by Engineer.

3. Manufactured and fabricated products:

   a. Design, fabricate and assemble in accordance with the best engineering and shop practices.

   b. Manufacture like parts of duplicate units to standard sizes and gauges, to be interchangeable.

   c. Two or more items of the same kind shall be identical, and shall be produced by the same manufacturer.

   d. Products shall be suitable for service conditions.

   e. Equipment capacities, sizes and dimensions shown or specified shall be adhered to unless variations are specifically approved in writing by the Engineer.

4. Do not use material or equipment for any purpose other than that for which it is designed or is specified.

1.02 APPROVAL OF MATERIALS

A. Only new materials and equipment shall be incorporated in the work. All materials and equipment furnished by Contractor shall be subject to the inspection and approval of the Owner. No material shall be delivered to the work without prior approval of the Engineer, with the consent of the Owner. See also Section 01340.

B. The Contractor shall submit to the Engineer data relating to materials and equipment proposed to be furnished for the work in accordance with Section 01340. Such data shall be in sufficient detail to enable the Engineer to identify the particular product and to form an opinion as to its conformity to the specifications.

C. Facilities and labor for handling and inspection of all materials and equipment shall be furnished by the Contractor. Either prior to beginning or during progress of the work, Contractor shall submit samples of materials for such special tests as may be necessary to demonstrate that they conform to the specifications. Such samples shall be furnished, stored, packed and shipped as directed by the supplier at Contractor's expense. Except as otherwise noted, Contractor shall make arrangements for and pay for the tests.

D. Contractor shall submit data and samples sufficiently early to permit consideration and approval before materials are necessary for incorporation in the work. Any delay of approval resulting from Contractor's failure to submit samples or data promptly shall not be used as a basis of claim against Owner or Engineer.

E. In order to demonstrate the proficiency of workers or to facilitate the choice among several

textures, types, finishes and surfaces, Contractor shall provide such samples of workmanship or finish as may be required.

F. The materials and equipment used on the work shall correspond to the approved samples or other data.

1.03 SUBSTITUTIONS AND PRODUCT OPTIONS

A. The substitution requirements of this Section are in addition to the requirements of the General Conditions and Supplementary Conditions.

B. The intent of these Specifications is to provide the Owner with a quality facility without discouraging competitive bidding. Substitutions may be submitted and will be evaluated as specified herein.

C. A Request for Substitution of Product may be submitted after the Contractor:

1. Has investigated the proposed product and determined that it is equal to or superior to the specified product, furnishes a certification to that effect, and waives all rights to additional payment or time that may subsequently become necessary due to the failure of the substituted product to perform adequately.

2. Agrees to provide same warranties or bonds for product substitution as for product specified.

3. Agrees to be responsible for coordinating and paying for any necessary changes to other work required by approved substitutions or product options which Contractor selects and shall pay all such costs including the costs of the services of the design professional to revise the Contract Documents if such revisions are required.

4. Waives all claims for additional costs due to substitution which may subsequently become apparent.

5. Is offering either a substantial credit to the Owner for acceptance of the substitution or a convincing justification that the product to be provided as the substitution is substantially superior in quality, performance, compatibility with adjacent products, durability, vandal-resistance or in other important ways.

D. If the Contractor proposes to provide products as "equals" to those specified, it shall be his responsibility to furnish complete, specific, detailed information to the Engineer for approval from the manufacturer or supplier of the product Contractor proposes to provide in which the requirements of the Contract Documents are shown to be met. This shall consist of a point-by-point comparison of the Contract requirements with the product proposed to be provided. In the event the Contract Document mentions a manufacturer, a point-by-point comparison of the product specified and that proposed to be provided shall be furnished by the Contractor. The burden of responsibility in furnishing this information is with the Contractor. If incomplete or irrelevant data is submitted as evidence of compliance with this subparagraph, the request for approval to provide this specific substitute product will be denied and no further submission will be considered.

E. Engineer's Action:

1. Engineer will consider written requests for product substitution for a period of 45 calendar days after the effective date of the Agreement. Engineer will review requests for substitutions with reasonable promptness and notify Contractor in writing of Owner's decision to accept or reject requested substitutions. Only the Owner may accept a substitution, based upon the Engineer’s recommendation.

2. Substitution requests made by means of shop drawings or product data submittal will not be

considered.

3. After the period of 45 days has elapsed, the only substitution requests which will be considered are those which are made necessary by the removal of the specified products from the market or by other similar, unavoidable circumstances beyond the control of the Contractor.

1.04 MANUFACTURER'S INSTRUCTIONS FOR INSTALLATION

A. When Contract Documents require that installation of work shall comply with manufacturer's printed instructions, Contractor shall obtain and distribute copies of such instructions to parties involved in the installation, including five copies to Engineer.

1. Maintain one set of complete instructions at the job site during installation and until completion.

B. Handle, install, connect, clean, condition and adjust products in strict accordance with such instructions and in conformity with specified requirements.

1. Should job conditions or specified requirements conflict with manufacturer's instructions, consult with Engineer for further instructions.

2. Do not proceed with work without clear instructions.

C. Perform work in accordance with manufacturer's instructions. Do not omit any preparatory step or installation procedure unless specifically modified or exempted by Contract Documents.

1.05 TRANSPORTATION AND HANDLING

A. Arrange deliveries of products in accordance with construction schedules, coordinate to avoid conflict with work and conditions at the site.

1. Deliver products in undamaged condition, in manufacturer's original containers or packaging, with identifying labels intact and legible.

2. Immediately on delivery, inspect shipments to assure compliance with requirements of Contract Documents and approved submittals, and that products are properly protected and undamaged.

B. Provide equipment and personnel to handle products by manufacturer’s approved methods to prevent soiling or damage to products or packaging.

1.06 STORAGE AND PROTECTION

A. The Contractor shall furnish a covered, weather-protected storage structure providing a clean, dry, noncorrosive environment for all mechanical equipment, valves, architectural items, electrical and instrumentation equipment, and special equipment to be incorporated into this project. Storage of equipment shall be in strict accordance with the "instructions for storage" of each equipment supplier and manufacturer including connection of heaters, placing of storage lubricants in equipment, etc. Corroded, damaged or deteriorated equipment and parts shall be replaced before acceptance of the project. Equipment and materials not properly stored will not be included in a payment estimate.

B. Store products in accordance with manufacturer's instructions, with seals and labels intact and legible.

1. Store products subject to damage by the elements in weathertight enclosures, such as buildings or trailers which have a concrete or wooden floor, a roof and fully closed walls on all sides.

2. Maintain temperature and humidity within the ranges required by manufacturer's instructions, (e.g., especially for electrical and instrumentation equipment).

3. Protect mechanical and electrical equipment from being contaminated by dust, dirt and moisture.

4. Store fabricated products above the ground, on blocking or skids, and prevent soiling or staining. Cover products which are subject to deterioration with impervious sheet coverings, but provide adequate ventilation to avoid condensation.

5. Provide heated storage space for material which would be damaged by freezing.

6. Store loose granular materials in a well-drained area on solid surfaces to prevent mixing with foreign matter.

7. Prior to the installation of equipment, it shall be stored at locations designated and approved by the Engineer.

C. All materials and equipment to be incorporated in the work shall be handled and stored by Contractor before, during and after shipment in a manner to prevent warping, twisting, bending, breaking, chipping, rusting, and any injury, theft or damage of any kind whatsoever to the material or equipment.

D. Cement, sand and lime shall be stored under a roof and off the ground and shall be kept completely dry at all times. All structural and miscellaneous steel, and reinforcing steel shall be stored off the ground or otherwise to prevent accumulations of dirt or grease, and in a position to prevent accumulations of standing water and to minimize rusting. Beams shall be stored with the webs vertical. Precast concrete beams shall be handled and stored in a manner to prevent accumulations of dirt, standing water, staining, chipping or cracking. Brick, block and similar masonry products shall be handled and stored in a manner to reduce breakage, chipping, cracking and spalling to a minimum.

E. All materials which, in the opinion of Engineer, have become so damaged as to be unfit for the use intended or specified shall be promptly removed from the site of the work, and Contractor shall receive no compensation for the damaged material or its removal.

F. Arrange storage in a manner to provide easy access for inspection. Make periodic inspections of stored products to assure that products are maintained under specified conditions, and free from damage or deterioration.

G. Protection After Installation: Provide substantial coverings as necessary to protect installed products from damage from traffic, dust, weather and subsequent construction operations. Remove covering when no longer needed.

H. The Contractor shall be responsible for all material, equipment and supplies sold and delivered to Owner under this Contract until final inspection of the work and acceptance thereof by Owner. In the event any such material, equipment and supplies are lost, stolen, damaged or destroyed prior to final inspection and acceptance, Contractor shall replace same without additional cost to Owner.

I. Should Contractor fail to take proper action on storage and handling of equipment supplied under this Contract within seven days after written notice to do so has been given, Owner retains the right to correct all deficiencies noted in previously transmitted written notice and deduct the cost associated with these corrections from Contractor's Contract. These costs may be comprised of expenditures for labor, equipment usage, administrative, clerical, engineering and any other costs associated with making the necessary corrections.

1.07 SPECIAL TOOLS

A. Manufacturers of equipment and machinery shall furnish any special tools, (including grease guns or other special lubricating devices), required for normal adjustment, operations and maintenance, together with instructions for their use. Contractor shall preserve and deliver to Owner these tools and instructions in good order no later than upon achievement of Substantial Completion.

1.08 STORAGE AND HANDLING OF EQUIPMENT ON SITE

A. Attention shall be given to the storage and handling of equipment on site. As a minimum, the procedure outlined below shall be followed:

1. Equipment shall not be shipped until approved by Engineer and Owner. The intent of this requirement is to reduce on-site storage time prior to installation and/or operation. Under no circumstances shall equipment be delivered to the site more than one month prior to installation without written authorization from Engineer. Equipment shipped to the site shall be stored in accordance with Paragraph 1.06, herein. Operation and maintenance data as described in Section 01730 shall be submitted to Engineer for review prior to shipment of equipment.

2. All equipment having moving parts, such as gears, electric motors, etc., and/or instruments shall be stored in a temperature and humidity controlled building approved by Engineer, until such time as the equipment is to be installed.

3. All equipment shall be stored fully lubricated with oil, grease, etc., unless otherwise instructed by the manufacturer.

4. Manufacturer's storage instructions shall be carefully studied by Contractor and reviewed with Engineer by the Contractor. These storage instructions shall be carefully followed and a written record of this kept by the Contractor.

5. Moving parts shall be rotated a minimum of once weekly to ensure proper lubrication and to avoid metal-to-metal "welding" or seizing. Upon installation of the equipment, Contractor shall start the equipment, at least half load, once weekly for an adequate period of time to ensure that the equipment does not deteriorate from lack of use.

6. Lubricants shall be changed upon completion of installation and as frequently as required thereafter during the period between installation and acceptance. Mechanical equipment to be used in the work, if stored for longer than ninety (90) days, shall have the bearings cleaned, flushed and lubricated prior to testing and startup, at no extra cost to Owner.

7. Prior to acceptance of the equipment, Contractor shall have the manufacturer inspect the equipment and certify that its condition has not been detrimentally affected by the long storage period. Such certifications by the manufacturer shall be deemed to mean that the equipment is judged by the manufacturer to be in a condition equal to that of equipment that has been shipped, installed, tested and accepted in a minimum time period. As such, the manufacturer will guarantee the equipment equally in both instances. If such a certification is not given, the equipment shall be judged to be defective. It shall be removed and replaced at Contractor's expense.

1.09 SPARE PARTS

A. Spare parts for certain equipment have been specified in the pertinent sections of the Specifications, or are common to the component as specified by the manufacturer. Contractor shall collect and store all spare parts so required in an area to be designated by Owner. In addition, Contractor shall furnish Engineer an inventory listing all spare parts, the equipment they are associated with, the name and address of the supplier, and the delivered cost of each item. Copies of actual invoices for each item shall be furnished with the inventory to substantiate the

delivered cost.

B. All spare parts shall be properly packaged and shall be labeled on the part itself and on the exterior of any packaging.

1.10 GREASE, OIL AND FUEL

A. All grease, oil and fuel required for testing of equipment shall be furnished with the respective equipment. Owner shall be furnished with a year's supply of required lubricants including grease and oil of the type recommended by manufacturer with each item of equipment supplied.

B. Contractor shall be responsible for changing the oil in all drives and intermediate drives of each mechanical equipment after initial break-in of the equipment, which in no event shall be any longer than three weeks of operation.

PART 2 - PRODUCTS (NOT USED)

PART 3 - EXECUTION (NOT USED)

END OF SECTION

SECTION 01700

CONTRACT CLOSEOUT

PART 1 - GENERAL

1.01 DESCRIPTION

A. Scope of Work: Comply with requirements stated in the General Conditions and Requirements of the Contract and in specifications for administrative procedures in closing out the Work.

1.02 SUBSTANTIAL COMPLETION

A. Subject to the definition of "Substantial Completion" in the General Conditions, the work may not be considered substantially complete unless the punch list items that remain, as identified by the Engineer and Owner, can be completed within thirty (30) days. All painting, finishes, fencing, cleanup, final grading, grassing and planting shall have been completed and ready for inspection before Substantial Completion is approved. After (or concurrent with) the Demonstration Tests, with any minor deficiencies noted, the Contractor wishing to consider the Work substantially complete, shall submit to the Engineer:

1. A written notice that the Work is substantially complete.

2. A list of items to be completed or corrected and explanations thereof.

B. Within a reasonable time after receipt of such notice, the Engineer will make an inspection, if necessary, to determine the status of completion.

C. Should Engineer determine that the Work is not substantially complete:

1. The Engineer will promptly notify Contractor in writing, giving the reasons therefore.

2. Contractor shall remedy the deficiencies in the Work and send a second written notice of Substantial Completion to Engineer.

3. Engineer will reinspect the Work.

D. When Engineer finds that the Work is substantially complete, he will:

1. Prepare a tentative Certificate of Substantial Completion on form provided herein (see Section 00830), with a tentative list of items to be completed or corrected before final inspection.

2. After consideration of any objections made by the Owner as provided in the General Conditions of the Contract, the Engineer will execute the Certificate of Substantial Completion with a revised tentative list of items to be completed or corrected.

1.03 FINAL INSPECTION AFTER COMPLETION

A. When Contractor considers the Work is complete with all minor deficiencies completed or corrected, he shall submit written certification that:

1. Contract Document requirements have been met.

2. Work has been inspected for compliance with Contract Documents.

3. Work has been completed in accordance with Contract Documents.

4. Equipment and systems have been tested in the presence of Owner's representative and are operational.

5. All minor deficiencies have been corrected or completed and the Work is ready for final inspection.

6. All operation and maintenance manuals have been submitted and are acceptable.

7. Project as-built documents are complete and submitted to the Engineer.

8. Transfer of all spares and expendables has been made to the Owner with a full accounting of the quantities and amounts due.

B. Engineer will make an inspection to verify the status of completion with reasonable promptness after receipt of such certification.

C. Should Engineer consider that the Work is incomplete or defective:

1. Engineer will promptly notify the Contractor in writing, listing the incomplete or defective work.

2. Contractor shall take immediate steps to remedy the stated deficiencies, and send a second written certification to Engineer that the Work is complete.

3. Engineer will re-inspect the Work.

D. When the Engineer finds that the Work is acceptable under the Contract Documents, he shall request the Contractor to make closeout submittals.

1.04 REINSPECTION FEES

A. Should the Engineer perform re-inspections due to failure of the Work to comply with the claims of status of completion made by Contractor:

1. Owner will compensate the Engineer for such additional services.

2. Owner will deduct the amount of such compensation from the final payment to the Contractor.

1.05 CONTRACTOR'S CLOSEOUT SUBMITTALS TO ENGINEER

A. Evidence of compliance with requirements of governing authorities.

B. Project Documents: To requirements of Section 01720.

C. Operating and Maintenance Data, Instructions to Owner's Personnel: To requirements of Section 01730.

D. Spare Parts and Maintenance Materials: To requirements of the General Conditions and the Technical Sections of the Specifications.

E. Evidence of Payment and Release of Liens: To requirements of the General and Special Conditions.

F. Certificate of Insurance for Products and Completed Operations.

1.06 FINAL ADJUSTMENT OF ACCOUNTS

A. Submit a final statement of accounting to the Engineer.

B. Statement shall reflect all adjustments to the Contract Sum:

1. The original Contract Sum.

2. Additions and deductions resulting from:

a. Previous change orders or written amendment.

b. Allowances

c. Unit prices

d. Deductions for uncorrected work

e. Penalties and bonuses

f. Deductions for re-inspection payments

g. Other adjustments

3. Total Contract Sum, as adjusted.

4. Previous payments.

5. Sum remaining due.

6. Evidence of transfer of inventory for all spares, and expendables used to return and supply the full specified amounts and quantities due.

C. Engineer will prepare a final Change Order, reflecting approved adjustments to the Contract Sum which were not previously made by Change Orders.

D. Submit Maintenance Bond to Owner.

1.07 FINAL PERIODIC PAY ESTIMATE

A. Contractor shall submit the executed final Periodic Pay Estimate in accordance with procedures and requirements stated in the Conditions of the Contract.

PART 2 - PRODUCTS (NOT USED)

PART 3 - EXECUTION (NOT USED)

END OF SECTION

PAGE INTENTIONALLY LEFT BLANK

SECTION 01710

CLEANING

PART 1 - GENERAL

1.01 DESCRIPTION

A. Maintain job site, surrounding areas, and all public or private properties free from improperly stored materials, accumulations of waste, debris, and rubbish caused by operations.

B. At completion of Work, remove waste materials, rubbish, tools, equipment, machinery, surplus materials, and clean all sight-exposed surfaces. Leave job site clean and ready for occupancy and operation.

PART 2 - PRODUCTS

2.01 MATERIALS

A. Use only cleaning materials recommended by manufacturer of materials of surface to be cleaned.

1. Use cleaning materials only on surfaces recommended by cleaning material manufacturer.

PART 3 - EXECUTION

3.01 CLEANING - GENERAL

A. Cleaning and Disposal:

1. Conduct cleaning and disposal operations in accord with legal requirements.

2. Do not burn or bury rubbish and waste materials on job site. Do not dispose of volatile wastes such as mineral spirits, oil, or paint thinner in either storm or sanitary drains.

B. Burning:

1. Burning of the trees, shrubs, bushes, etc., cleared on the project site will not be allowed within the project site unless prior approval is obtained from the appropriate governmental authorities and the Owner or the Engineer. All approved burning shall be completed with the use of an air curtain.

C. Hazards Control:

1. Store volatile wastes in covered metal containers, and remove from premises daily.

2. Prevent accumulation of wastes which create hazardous conditions.

3. Provide adequate ventilation during use of volatile or noxious substances.

3.02 CLEAN-UP DURING CONSTRUCTION

A. Perform routine cleaning to ensure job site, premises, private properties and adjacent properties and rights-of-way are maintained free from accumulations of waste materials and rubbish.

B. During Construction:

1. During construction, the Contractor shall, at all times, keep the site of the Work and adjacent premises as free from material, debris and rubbish as is practicable and shall remove the same from any portion of the site if, in the opinion of the Owner or Engineer, such material, debris, or rubbish constitutes a nuisance or is objectionable.

2. The Contractor shall remove from the site all of his surplus materials and temporary structures when no further need therefore develops. Contractor shall be responsible and liable for all spillage and incur all associated costs including, but not limited to, costs related to repair and maintenance resulting from damages thereof, and fines that may be levied as a result of citations given by State or local regulatory agencies.

3. Wet down dry materials and rubbish to lay and control dust.

4. At reasonable intervals during progress of Work, clean job site and public properties, and dispose of waste materials, debris and rubbish.

5. Provide dump containers on job site and pay for regular collection of waste materials, debris and rubbish.

6. Remove waste materials, debris and rubbish from job site, premises, adjacent and public properties and legally dispose of at public or private dumping areas.

7. Handle materials in a controlled manner with as few handlings as possible. Do not drop or throw materials from height.

8. Schedule cleaning operations so that dust and other contaminants resulting from cleaning process will not fall on wet, newly painted surfaces.

3.03 FINAL CLEANING

A. In preparation for Substantial Completion or occupancy, conduct final inspection of sight-exposed interior and exterior surfaces, and of concealed spaces.

1. At the conclusion of the Work, all erection tools, temporary structures and excess materials belonging to the Contractor shall be promptly removed, and Contractor shall remove and promptly dispose of all water, dirt, rubbish or any other foreign substances to a facility permitted to manage these materials.

2. The Contractor shall thoroughly clean all equipment and materials installed and shall deliver such materials and equipment undamaged in a bright, clean, polished and new operating condition.

3. Remove grease, dust, dirt, stains, labels, furniture, fingerprints, and other foreign materials, from sight-exposed interior and exterior finished surfaces.

4. Clean and polish all factory finished surfaces such as plastic laminate, plated metals, stainless steel, and factory baked-on enamel or other painted surfaces.

5. Repair, patch and touch-up marred surfaces to specified finish, and to match adjacent surfaces as appropriate.

6. Broom clean paved surfaces; rake clean other surfaces of grounds.

7. Owner will assume responsibility for cleaning as of time designated on Certificate of Substantial Completion for Owner's acceptance of project or portion thereof.

3.04 GENERAL REQUIREMENTS

A. If the Contractor fails to comply with the requirements of this Article, in the opinion of the Owner or the Engineer, the Owner shall perform the necessary clean-up and deduct the cost of work from the monies due or to become due to said Contractor.

END OF SECTION

SECTION 01720

PROJECT DOCUMENTS

PART 1 - GENERAL

1.01 MAINTENANCE OF PROJECT DOCUMENTS

A. Maintain one copy of each of the following project documents:

1. Construction documents.

   a. Construction drawings.

   b. Project manual including addenda and bulletins.

   c. Approved shop drawings and samples.

   d. Contract modification records. (Change orders, field orders, directives, and other written amendments to the Contract).

2. As-Built documents.

   a. Progress as-built drawings.

   b. Progress as-built specifications.

   c. Final as-built drawings.

   d. Final as-built specifications.

   e. Field test records.

B. Adhere to following guidelines for maintenance of project documents:

1. Store project documents apart from documents used for construction purposes.

2. Provide appropriate methods for secure storage of project documents.

3. Maintain project documents in clean, dry, and legible condition.

4. Make the project documents available for inspection by the Engineer and other authorized users at all times.

5. Do not use project documents for construction purposes.

C. General Requirements

1. Progress As-Built Drawings:

   a. The Engineer will provide to the Contractor two sets of contract drawings. One set shall be used solely for keeping progress as-built drawings and the other set shall be used solely for producing final as-built drawings.

   b. The Contractor is required to make available progress as-built drawings to the Engineer at each progress meeting for review. The purpose of this review is to ensure that as-built documents are being kept up to date by the Contractor.

   c. During construction, the Contractor shall keep a marked up-to-date set of progress as-built drawings as an accurate record of all deviations between the Work as shown and as

installed. These drawings shall be made available to the Owner and Engineer for inspection at any time.

d. If the project as-built drawings are not kept up to date to the satisfaction of the Owner or Engineer, or their submittal is not made at the date and time requested, funds may be retained from the Contractor's Periodic Pay Request until deficiencies are cured.

2. Final As-Built Drawings:

a. Upon completion of Work, the Contractor shall accurately and neatly transfer notations from the progress as-built drawings to the final as-built drawings. The Contractor shall submit to the Engineer a complete set of final as-built drawings with "AS-BUILT" clearly printed on each sheet.

3. Progress As-Built Specifications:

a. The Engineer will provide to the Contractor two sets of contract specifications. One set shall be used solely for keeping progress as-built specifications and the other set shall be used solely for producing final as-built specifications. During construction, Contractor shall keep an up-to-date set of progress as-built specifications annotated to clearly indicate substitutions and specific items of equipment that are incorporated into the Work. Progress as-built specifications shall be made available for inspection at any time by the Owner or Engineer.

4. Final As-Built Specifications:

a. Upon completion of Work, the Contractor shall accurately and neatly transfer notations from the progress as-built specifications to the final as-built specifications. The Contractor shall submit to the Engineer a complete set of final as-built specifications with "AS-BUILT" clearly printed on the cover.

1.02 MARKING DEVICES

A. Provide fine ball-point-colored pens for marking, or use electronic marking methods, as appropriate.

1.03 RECORDING

A. Keep all project documents current.

B. Do not permanently cover any work until the required information has been obtained and recorded.

C. On the final as-built drawings, legibly record actual construction work accomplished, including but not limited to the following items:

1. **Horizontal locations and vertical elevations of all constructed underground or obscured utilities and appurtenances (such as structures, pipes, fittings, valves, casings, laterals, sleeves, pull boxes, junction boxes, conduits, and changes of horizontal or vertical direction) referenced to at least two readily visible permanent surface features such as edges of pavement, curbs, buildings, utility poles, manhole covers, valve boxes, etc. On curved lines installed by deflection, horizontal and vertical elevations shall be provided every 75 feet as a minimum**.

2. All construction details not shown in the original contract drawings.

D. Within or near the title block of each final as-built drawing, update the drawings with the latest revision identified as "AS-BUILT" and date.

E. On the final as-built specifications, legibly mark-up and supplement each Section to record actual information, including but not limited to the following items:

1. Manufacturer, trade name, catalog number, performance data, and supplier of each product and item of equipment actually installed.

2. Other items not originally specified in the Contract Documents.

F. Legibly annotate shop drawings and samples to record any changes made after approval.

1.04 AUDIT

A. Progress Project Documents will be reviewed periodically by the Engineer who will use the current completeness of the project documents in evaluating the monthly progress payment request.

1.05 SUBMITTAL

A. At completion of project, deliver the final as-built drawings, final as-built specifications, and test records to the Engineer.

B. Engineer Review and Acceptance

1. The final as-built drawings shall be reviewed by the Engineer for acceptability and conformance to these Contract Documents.

2. Should the Engineer discover errors, inconsistencies or omissions in the final as-built drawings, the Contractor shall make all such corrections to the satisfaction of the Engineer.

3. The Engineer shall then use the approved set of final Contractor as-built drawings to compile the official project record documents for submission to the Owner and other parties, as may be required for the project.

C. The Contractor shall accompany as-built submittals with a transmittal letter containing:

1. Date.

2. Project title and number.

3. Contractor's name and address.

4. Title and identification of each project document.

5. Certification that each document as submitted is complete and accurate.

6. Signature of Contractor, or its authorized representative.

D. **THE FINAL AS-BUILT DRAWINGS SUBMITTED BY THE CONTRACTOR TO THE ENGINEER SHALL BE PREPARED BY A PROFESSIONAL LAND SURVEYOR REGISTERED IN THE STATE OF FLORIDA AND CERTIFIED TO THE EXTENT POSSIBLE WITHIN THE LIMITATIONS OF CHAPTER 5J-17 OF THE FLORIDA ADMINISTRATIVE CODE**.

PART 2 - PRODUCTS (NOT USED)

PART 3 - EXECUTION (NOT USED)

END OF SECTION

PAGE INTENTIONALLY LEFT BLANK

SECTION 01730

OPERATING AND MAINTENANCE DATA

PART 1 - GENERAL

1.01 DESCRIPTION

A. Scope of Work:

1. Compile product data and related information appropriate for Owner's maintenance and operation only of products furnished by the Contractor under this Contract.

2. Prepare operating and maintenance data as specified in this Section and as referenced in other pertinent sections of Contract Documents.

3. Instruct Owner's personnel in maintenance of products and in operation of equipment and systems.

1.02 QUALITY ASSURANCE

A. Preparation of data shall be done by personnel:

1. Trained and experienced in maintenance and operation of described products.

2. Familiar with requirements of this Section.

3. Skilled as a technical writer to the extent required to communicate essential data.

4. Skilled as draftsman competent to prepare required drawings.

1.03 FORM OF SUBMITTALS

A. Prepare data in form of an instructional manual for use by Owner's personnel.

B. Format:

1. Size: 8 1/2-inches x 11 inches.

2. Paper: 20 pound minimum, white, for typed pages.

3. Text: Manufacturer's printed data, or neatly typewritten.

4. Drawings:

a. Provide reinforced punched binder tab, bind in with text.

b. Reduce larger drawings and fold to size of text pages but not larger than 11 inches x 17 inches.

5. Provide fly-leaf for each separate product, or each piece of operating equipment.

a. Provide typed description of products and major component parts of equipment.

b. Provide indexed tabs.

6. Cover: Identify each volume with typed or printed title "OPERATING AND MAINTENANCE INSTRUCTIONS". List:

a. Title of Project.

b. Identity of separate structure, as applicable.

c. Identity of general subject matter covered in the manual.

C. Binders:

1. Commercial quality three O-ring or D-ring binders with durable and cleanable plastic or vinyl covers provided with slip-pockets for typed or printed title pages.

2. Maximum post width: 2 inches.

3. When multiple binders are used, correlate the data into related consistent groupings.

D. In addition to the printed format described above, all Operation and Maintenance Data manuals are to also be provided to the Engineer and Owner in electronic, PDF, format on a CD or flash drive.

1.04 CONTENT OF MANUAL

A. Provide neatly typewritten table of contents for each volume, arranged in systematic order.

1. Contractor, name of responsible principal, address and telephone number.

2. A list of each product required to be included, indexed to content of the volume.

3. List, with each product, name, address and telephone number of:

a. Subcontractor or installer, manufacturer and supplier name, address and telephone number.

b. A list of each product required to be included, indexed to content of the volume.

c. Identify area of responsibility of each.

d. Local source of supply for parts and replacement name, address and telephone number.

4. Identify each product by product name and other identifying symbols as set forth in Contract Documents.

B. Product Data:

1. Include only those sheets which are pertinent to the specific product.

2. Annotate each sheet to:

a. Clearly identify specific product or part installed.

b. Clearly identify data applicable to installation.

c. Delete references to inapplicable information.

3. Operation and maintenance information as herein specified.

4. As-built shop drawings as submitted and approved with all corrections made for each product.

C. Drawings:

1. Supplement product data with drawings as necessary to clearly illustrate:

a. Relations of component parts of equipment and systems.

b. Control and flow diagrams.

2. Coordinate drawings with information in Project Documents to assure correct illustration of completed installation.

3. Do not use Project As-built Documents as maintenance drawings.

D. Written text, as required to supplement product data for the particular installation:

1. Organize in consistent format under separate headings for different procedures.

2. Provide logical sequence of instructions of each procedure.

E. Copy of each warranty, bond and service contract issued.

1. Provide information sheet for Owner's personnel, give:

a. Proper procedures in event of failure.

b. Instances which might affect validity of warranties or bonds.

1.05 MANUAL FOR MATERIALS AND FINISHES

A. Submit three copies of complete manual in final form.

B. Content: for applied materials and finishes:

1. Manufacturer's data, giving full information on products.

a. Catalog number, size, composition.

b. Color and texture designations.

c. Information required for reordering special manufactured products.

2. Instructions for care and maintenance.

a. Manufacturer's recommendation for types of cleaning agents and methods.

b. Cautions against cleaning agents and methods which are detrimental to product.

c. Recommend schedule for cleaning and maintenance.

C. Content, for moisture protection and weather-exposed products:

1. Manufacturer's data, giving full information on products.

a. Applicable standards.

b. Chemical composition.

c. Details of installation.

2. Instructions for inspection, maintenance and repair.

D. Additional requirements for maintenance data: Respective sections of Specifications.

1.06 MANUAL FOR EQUIPMENT AND SYSTEMS

A. Submit three copies of complete manual in final form.

B. Content, for each unit of equipment and system, as appropriate:

1. Description of unit and component parts.

    a. Function, normal operating characteristics, and limiting conditions.

    b. Performance curves, engineering data and tests.

    c. Complete nomenclature and commercial number of replaceable parts.

    d. Summary of information listed on equipment and motor data plates.

2. Operating procedures:

    a. Start-up, break-in, routine and normal operating instructions.

    b. Regulation, control, stopping, shut-down and emergency instructions.

    c. Summer and winter operating instructions.

    d. Special operating instructions.

3. Maintenance procedures:

    a. Routine operations.

    b. Guide to "trouble-shooting".

    c. Disassembly, repair and reassembly.

    d. Alignment, adjusting and checking.

4. Servicing and lubrication required.

5. Manufacturer's printed operating and maintenance instructions.

6. Description of sequence of operation by control manufacturer.

7. Original manufacturer's parts list, illustrations, assembly drawings and diagrams required for maintenance.

    a. Predicted life of parts subject to wear.

    b. Items recommended to be stocked as spare parts.

8. As-installed control diagrams by controls manufacturer.

9. Each Contractor's coordination drawings.

10. Charts of valve tag numbers, with location and function of each valve.

11. List of original manufacturer's spare parts, manufacturer's current prices and recommended quantities to be maintained in storage.

12. Other data as required under pertinent sections of specifications.

13. Approved as-built shop drawings with all corrections made, and a copy of the warranty statement, check-out memo, and demonstration test procedures and certification.

C. Content, for each electric and electronic system, as appropriate:

1. Description of system and component parts.

a. Function, normal operating characteristics, and limiting conditions.

b. Performance curves, engineering data and tests.

c. Complete nomenclature and commercial number of replaceable parts.

2. Circuit directories of panelboards.

a. Electrical service

b. Controls

3. As installed, color coded wiring diagrams.

4. Operating procedures:

a. Routine and normal operating instructions.

b. Sequences required.

c. Special operating instructions.

5. Maintenance procedures:

a. Routine operations.

b. Guide to "trouble-shooting".

c. Disassembly, repair and reassembly.

d. Adjustment and checking.

6. Manufacturer's printed operating and maintenance instructions.

7. List of original manufacturer's spare parts, manufacturer's current prices, and recommended quantities to be maintained in storage.

8. Other data as required under pertinent sections of specifications.

D. Prepare and include additional data when the need for such data becomes apparent during instruction of Owner's personnel.

E. Additional requirements for operating and maintenance data: Respective sections of Specifications.

1.07 SUBMITTAL SCHEDULE

A. Submit two copies of preliminary draft of proposed formats and outlines of contents of Operation and Maintenance Manuals within 90 days after Notice to Proceed. Sets of example O&M manuals are available for examination upon request.

B. Submit two copies of completed data in preliminary form no later than 20 days following Engineer's review of the last shop drawing of a product and/or other submittal specified under

Section 01340, but no later than delivery of equipment. One copy will be returned with comments to be incorporated into the final copies and the other copy will be retained on-site for use in any early training.

C. Submit three (3) copies of approved manual in final form directly to the offices of the Engineer, within 10 days after the reviewed copy or last item of the reviewed copy is returned.

D. Provide three (3) copies of addenda to the operation and maintenance manuals as applicable and certificates as specified within 30 days after final inspection.

E. Provide one (1) copy, each, of final electronic version to Engineer and Owner.

1.08 INSTRUCTION OF OWNER'S PERSONNEL

A. Prior to demonstration test, fully instruct Owner's designated operating and maintenance personnel in operation, adjustment and maintenance of products, equipment and systems.

B. Operating and maintenance manual shall constitute the basis of instruction. Review contents of manual with personnel in full detail to explain all aspects of operations and maintenance.

PART 2 - PRODUCTS (NOT USED)

PART 3 - EXECUTION (NOT USED)

END OF SECTION

SECTION 01740

WARRANTIES AND BONDS

PART 1 - GENERAL

1.01 DESCRIPTION

A. Scope of Work:

1. Compile specified warranties and bonds, as required by the Contract Documents.

2. Co-execute submittals when so specified.

3. Review submittals to verify compliance with Contract Documents.

4. Submit to Engineer for review and transmittal to Owner.

1.02 SUBMITTAL REQUIREMENTS

A. Assemble warranties, bonds and service and maintenance contracts, executed by each of the respective manufacturers, suppliers, and subcontractors.

B. Number of original signed copies required: Two each.

C. Table of Contents: Neatly typed or printed, in an orderly sequence. Provide complete information for each item:

1. Product or work item.

2. Firm, with name of principal, address and telephone number.

3. Scope.

4. Date of beginning of warranty, bond or service and maintenance contract.

5. Duration of warranty, bond or service maintenance contract.

6. Information for Owner's personnel: Instances which might affect the validity or warranty or bond.

7. Contractor, name of responsible principal, address and telephone number.

1.03 FORM OF SUBMITTALS

A. Prepare in duplicate packets.

B. Format:

1. Size 8 1/2-inches x 11 inches, punch sheets for standard three-post binder. Fold larger sheets to fit into binders.

2. Cover: Identify each packet with typed or printed title "WARRANTIES AND BONDS". List:

a. Title of Project.

b. Name of Contractor.

C. Binders: Commercial quality, three-ring binder, with durable and cleanable plastic or vinyl covers and maximum ring size of two inches.

1.04 WARRANTY SUBMITTALS REQUIREMENTS

A. For all material, submit a warranty from the product manufacturer. The manufacturer's warranty period shall be concurrent with Contractor's for two (2) years, unless otherwise specified, commencing at the time of final acceptance by Owner.

B. The Contractor shall be responsible for obtaining certificates for material warranty for all major items which list for more than $1,000. The Engineer reserves the right to request warranties for material not classified as major. The Contractor shall still warrant material not considered to be "major" in the Contractor's two-year warranty period even though certificates of warranty may not be required.

C. In the event that the material manufacturer or supplier is unwilling to provide a two-year warranty commencing at the time of Owner acceptance, the Contractor shall obtain from the manufacturer a three (3) year warranty commencing at the time of equipment delivery to the job site. This three-year warranty from the manufacturer shall not relieve Contractor of the two-year warranty starting at the time of Owner acceptance of the equipment.

D. Owner shall incur no labor or equipment shipping cost during the guarantee period.

E. Guarantee shall cover all necessary labor, and materials resulting from faulty or inadequate design, improper assembly or erection, defective workmanship and materials, leakage, breakage or other failure of all equipment and components furnished by Manufacturer.

PART 2 - PRODUCTS (NOT USED)

PART 3 - EXECUTION (NOT USED)

END OF SECTION

SECTION 01850

COLOR AUDIO-VIDEO PRECONSTRUCTION RECORD

PART 1 - GENERAL

1.01 SCOPE

A. **Prior to commencing any work**, the Contractor shall have a continuous color audio-video recording made along the entire length and width of the Project area or areas to serve as a record of the pre-construction conditions.

B. The Contractor shall provide one copy of the video recording and written narrative to the Owner and one to the Engineer.

C. The recording and narrative shall be delivered both to the Owner and Engineer within 10 days after execution.

1.02 APPROVAL

A. No construction shall begin prior to review and approval of the recording covering the specific construction area by the Engineer and Owner. The Engineer shall have the authority to reject all or any portion of a recording not conforming to these specifications and order that it be redone at no additional charge. The Contractor shall reschedule unacceptable coverage within five days after being notified. The Engineer shall designate those areas, if any, to be omitted from or added to the audio-video coverage. Recordings shall not be made more than 90 days prior to construction in any area. All recordings and written narrative records shall become property of Owner.

1.03 PROFESSIONAL ELECTROGRAPHERS

A. The Contractor shall engage the services of a professional electrographer to produce the recording. The color audio-video record shall be prepared by a responsible commercial firm known to be skilled and regularly engaged in the business of preconstruction color audio-video documentation. The Contractor, as a shop drawing, shall have the electrographer furnish for the Engineer a list of all equipment to be used for the audio-video recording, including the manufacturer's name, model number, technical specifications and other pertinent information. Additional information to be furnished by the electrographer includes the names and addresses of two references that the electrographer has performed color audio-video recording for projects of a similar nature, at least one of which must have been within the last 12 months.

PART 2 - PRODUCTS

2.01 GENERAL

A. All equipment must meet generally accepted standards for professional video production, (e.g., ENG equipment), and be suited for the application. Video recording equipment sold and intended for home use is NOT acceptable.

B. The equipment used may employ any standard, professional format, such as:

1. Analog Video and Audio

    a. VHS Videotape

    b. VHS-C Videotape

2. Digital Video and Audio

    a. DVCAM

b. DVCPRO

c. MiniDV

d. HDV

2.02 DELIVERABLES

A. The media used for the audio-video recordings delivered to the Owner and Engineer shall be clearly and full labeled and shall be compatible with current industry standards and the format utilized. Acceptable examples include:

1. Videotape

a. Videotapes shall be new. Reprocessed tapes will not be acceptable. The tapes shall be one-half inch high energy, extended still frame capable, video cassette, and shall be compatible for playback with a VHS system.

2. Digital Video Disk (DVD)

a. DVD's shall be new and protected by a hard-plastic case.

PART 3 - EXECUTION

3.01 EQUIPMENT

A. All equipment, accessories, materials and labor to perform this service shall be furnished by the professional electrographer.

B. The total audio-video system shall reproduce bright, sharp, clear pictures with accurate colors and shall be free from distortion, tearing, rolls or any other form of imperfection. The audio portion of the recording shall reproduce the commentary of the camera operator with proper volume, clarity and be free from distortion and interruptions.

C. When conventional wheeled vehicles are used, the distance from the camera lens to the ground shall be adequate to properly show the existing conditions. In some instances, audio-video coverage may be required in areas not accessible by conventional wheeled vehicles. Such coverage shall be obtained by walking or special conveyance approved by the Engineer.

D. The color video camera used in the recording system shall have a minimum horizontal resolution of 300 lines at center, a luminance signal to noise ratio of 545 dB or better and a minimum illumination requirement of 25 foot-candles.

3.02 RECORDED INFORMATION - AUDIO

A. Each recording shall begin with the current date, project name and municipality and be followed by the general location, i.e., name of street, house address, viewing side and direction of progress. The audio track shall consist of an original live recording. The recording shall contain the narrative commentary of the electrographer, recorded simultaneously with the fixed elevation video record of the zone of influence of construction.

3.03 RECORDED INFORMATION - VIDEO

A. All video recordings must, by electronic means, display continuously and simultaneously generated with the actual taping transparent digital information to include the date and time of recording, and stations numbers as shown on the Drawings. The date information shall contain the month, day and year. The time information shall contain the hour, minutes and seconds. Additional information shall be displayed periodically. Such information shall include but not be limited to project name, contract number, name of street, house address, direction of travel and the viewing side. This transparent information shall appear on the extreme upper left hand third

of the screen.

3.04 LIGHTING

A. All video recording shall be done during times of good visibility. No recording shall be done during precipitation, mist or fog. The recording shall only be done when sufficient sunlight is present to properly illuminate the subjects of the recording and to produce bright, sharp video images of those subjects.

3.05 SPEED OF TRAVEL

A. The rate of speed in the general direction of travel of the vehicle, dolly or technician during recording shall not exceed 44 feet per minute. Panning, zoom-in and zoom-out rates shall be sufficiently controlled to maintain a clear view of the object throughout the view.

3.06 AREA OF COVERAGE

A. Video coverage shall include all surface features located within the zone of influence of construction supported by appropriate audio coverage. Such coverage shall include, but not be limited to, existing parking lots, driveways, sidewalks, curbs, pavements, ditches, mailboxes, green space, landscaping, culverts, headwalls, fences, signs, amenities, houses, walls, other buildings, and all other features visible within the area covered.

B. Should a damage claim be brought by any citizen or public official concerning a feature not included or not adequately depicted in the pre-construction audio-video coverage, the Contractor shall bear the full burden of proof regarding liability.

END OF SECTION

PAGE INTENTIONALLY LEFT BLANK

SECTION 01900

SEQUENCE OF CONSTRUCTION

PART 1 - GENERAL

1.01 DESCRIPTION

A. The Owner is required to maintain proper operation of the Lowes/Gateway Lift Station at all times during the execution of the Contract. The Contractor shall follow a sequence of construction consistent with that requirement. Down time during connection to the existing force main is anticipated, but must be kept to a minimum so operations and service to the customers is not interrupted.

PART 2 - PRODUCTS (NOT USED)

PART 3 - EXECUTION

3.01 OVERALL SEQUENCE OF CONSTRUCTION

A. Erosion control measures must be established prior to commencement of construction. The pre-construction video must also be completed before starting construction.

B. The Owner is required to maintain proper operation of the Lowes Lift Station at all times during the execution of the Contract. Therefore, the Contractor shall follow a sequence of construction consistent with that requirement, as suggested below.

C. Suggested Sequence of Construction:

1. Locate and mark all buried underground utilities, piping, conduits, etc. in the work area. Contractor to physically locate the existing force main and water service to confirm surveyed location is accurate.

2. Wet tap existing 8-inch force main and install bypass pump and equipment. Contractor to coordinate with the City prior to implementing bypass.

3. Complete rehabilitation of Lowes*/Gateway* Lift Station wet well, including construction of proposed electrical and all associated piping.

4. Pressure test and activate the new force main. Complete required construction testing on new 6-inch force main and receive clearance from FDEP as required.

5. Contractor to install concrete pads and driveway next to Lift Station, then install gravel access area around Lift Station.

6. Contractor to restore all disturbed locations to existing conditions or better as shown on the construction documents including but not limited to driveways, sidewalks, sod, etc.

7. Notify engineer of substantial completion.

8. Complete site clean-up

9. Complete punch list.

END OF SECTION

PAGE INTENTIONALLY LEFT BLANK

SECTION 02015

EQUIPMENT, PIPING, AND MATERIALS DEMOLITION

PART 1 - GENERAL

1.01 DESCRIPTION

A. Scope of Work: Furnish all labor, materials, equipment and incidentals required to abandon, remove, salvage and/or dispose of existing force main pipelines and associated equipment as shown on the Drawings and as specified herein.

B. Definitions:

1. Pipeline Abandonment - isolate from active pipelines, remove from service, dispose of pipeline contents, plug pipeline, fill pipeline with specified cementitious material, leave pipe in place. Remove above ground structures. Cut and cap to 3' below ground surface.

2. Pipeline Removal - isolate from active pipelines, remove from service, dispose of pipeline contents, remove pipe, valves, fittings, dispose or stockpile removed materials as required.

1.02 QUALITY ASSURANCE

A. Permits and Licenses: Contractor shall obtain and pay respective fees for all necessary permits and licenses for performing the Work and shall furnish a copy of same to the Engineer prior to commencing the Work. The Contractor shall comply with the requirements of the permits.

B. Notices: Contractor shall issue written notices of planned work to companies or local authorities owning utility conduit, wires or pipes running to or through the project site. Copies of said notices shall be submitted to the Engineer.

C. Standards:

1. Florida Administrative Code 62-204.800.

2. National Emission Standards Hazardous Air Pollution (NESHAP), 40 CFR Part 61, Subpart M, latest revision.

3. Occupational Safety and Health Act, 29 CFR

4. The Environmental Protection Agency (EPA) Asbestos Abatement Worker Protection Rule.

5. Florida Statute 455.300.

6. American Water Works Association (AWWA) Manual No. M16 and C603

D. Quality Control

1. It shall be the responsibility of the Contractor to provide supervision and inspections to ensure that the existing piping is removed and disposed, salvaged or abandoned as designated in the Drawings and as specified herein.

1.03 SUBMITTALS

A. References:

1. References from at least three completed projects as evidence of experience of proper procedures in removal, handling and disposal of asbestos-cement pipe materials within the past five (5) years if it is part of the scope to remove asbestos cement pipe.

B. Shop Drawings:

1. Shop drawings shall be submitted to the Engineers acceptance prior to construction in accordance with Division 1 for the following:

    a. Grout;

    b. Caps;

    c. Plugs;

    d. Valve Boxes.

PART 2 - MATERIALS

A. Grout – See Section 03600 Grouting

PART 3 - EXECUTION

3.01 REMOVAL, ABANDONMENT AND DISPOSAL

A. General: Existing piping designated on the Drawings to be removed shall be exposed and removed by the Contractor in accordance with the requirements specified herein.

B. Typical types of pipe to be removed;

1. Ductile iron (DI) pipe;

2. Cast iron (CI) pipe;

3. Asbestos Cement (AC) pipe;

4. Polyvinylchloride (PVC) pipe;

5. Galvanized steel (GAL) pipe; and

6. Wood (WP) pipe

C. Removal and Disposal:

1. Pipe designated to be removed and disposed by the Contractor shall be completely drained and the contents properly disposed. The pipe shall then be completely removed from the site, including fittings, valves other in- line devices.

2. Asbestos Cement Removal

    a. The Contractor will be responsible for permitting, removal and disposal of asbestos-cement (AC) pipe segments required to perform the Work as shown on the Drawings. The following paragraphs briefly summarize permitting, field procedures and disposal activities related to the AC pipe. In these discussions, certain local, state and federal laws have been referenced. The Contractor must comply with all applicable local, state and federal laws/regulations whether or not such procedures, laws, and/or regulations are referenced in these specifications.

    b. The Contractor shall apply for and obtain all permits related to removal of the AC pipe segments. In accordance with Florida Department of Environmental Protection (FDEP) Rule 62-257.30 1 of the Florida Administrative Code (FAC), the Contractor must submit a “Notice of Asbestos Removal Project” form with a copy to the Engineer. The Contractor will submit the form to FDEP in a timely manner in accordance with the schedule contained in Rule 62-257. The agencies that may require permits for this project are not necessarily limited to the FDEP.

c. Field Procedures. The Contractor is responsible for all procedures, including safety and health procedures, which will be used when handling AC pipe segments. The Contractor's handling of AC pipe segments shall be in conformance with 29 CFR 1926.58 (OSHA Safety and Health Standards).

d. Cutting of AC pipe shall be done in conformance with the recommended practices contained in the American Water Works Association's (AWWA) Manual No. M-16. Cutting methods should be used which minimize the production of airborne dust.

e. Preparation of Transport of Materials. The Contractor will remove the pipe sections from the ground in whole pieces without fracturing, breaking or otherwise damaging pipe. The AC pipe segments shall be carefully loaded onto the transport vehicle without damaging the pipe. The transport vehicle shall totally enclose the AC pipe segments so that wind and rain cannot disperse dust from the pipe material. Transport of the AC pipe segments shall also meet the requirements of the waste disposal agency.

f. Waste Disposal. As stated in Rule 62-701.520(3), the FDEP indicates that asbestos containing waste materials can be accepted at a permitted Class I, II or III landfill. The regulations also indicate that the waste generator (the Contractor) shall make arrangements with the landfill operator before disposal of the asbestos containing waste materials and inform the operator of the quantity of the waste and the scheduled date the shipment will arrive at the landfill. The Contractor shall provide the Engineer and the Owner a manifest immediately following disposal.

D. Removal of material to be salvaged:

1. Pipe and valves to be removed and salvaged as directed by the Owner shall be completely drained and the contents properly disposed. The pipe shall then be thoroughly pressure washed, palletized on wooden skids to a dimension not exceeding the recommendation of the manufacturer, and conveyed to the Owner at the location designated by the Owner.

E. Abandonment:

1. Types of pipe to be abandoned in place:

a. Ductile iron (DI) pipe;

b. Cast iron (CI) pipe;

c. Asbestos Cement (AC) pipe;

d. Polyvinylchloride (PVC) pipe;

e. Galvanized steel (GAL) pipe; and

f. Wood (WP) pipe

2. All pipe designated to be abandoned on this project shall be left in place and filled with grout in accordance with Section 03600, "Grouting" as shown on the Drawings.

3. Plugs: Pipe to be grouted shall be capped or plugged with a fitting. All caps and plugs shall be submitted to the Engineer for approval.

4. Existing pipe shall be properly restrained per the restrained joint table requirements with thrust collars or manufactured restraints based on conditions that result from cutting pipes and/or closing valves to grout pipe to be abandoned.

END OF SECTION

PAGE INTENTIONALLY LEFT BLANK

SECTION 02100

CLEARING AND GRUBBING

PART 1 - GENERAL

1.01 DESCRIPTION

A. This section includes removal and disposal of all timber, brush, stumps, roots, grass, weeds, sawdust, rubbish, structures, and existing pavement.

1.02 DEFINITIONS

A. This section includes removal and disposal of all timber, brush, stumps, roots, grass, weeds, sawdust, rubbish, structures, and existing pavement.

1. Clearing: Removal and disposal of above-ground items defined herein.

2. Grubbing: Removal and disposal of below-ground items defined herein.

PART 2 - PRODUCTS

2.01 DISPOSAL OF MATERIALS

A. Promptly haul away and properly dispose of all non-combustible materials.

B. Burning of brush and debris shall not be permitted.

C. The Contractor shall, at his expense, dispose of all material and debris from the clearing and grubbing operation in accordance with all applicable ordinances.

PART 3 - EXECUTION

3.01 CLEARING

A. In all area within five (5) feet of the pipeline or fiber optic cable of the project, remove and dispose of trees, snags, stumps, shrubs, brush, limbs, and other vegetative growth. Remove all evidence of their presence from the surface including sticks and branches greater than one (1) inch in diameter or thickness. Remove and dispose of trash piles, rubbish and stockpiled organic material. Protect trees, shrubs, and vegetative growth which are not designated for removal.

3.02 GRUBBING

A. In all areas where excavation will be done, in all areas under structures, roadways or pavements, in all areas which fill will be placed, remove all stumps, roots, brush and other debris greater than 1 inch in diameter to a depth of not less than two (2) feet below the subgrade.

END OF SECTION

PAGE INTENTIONALLY LEFT BLANK

SECTION 02240

DEWATERING

PART 1 - GENERAL

1.01 GENERAL REQUIREMENTS

A. Obtain the services of a qualified dewatering specialist to provide dewatering plan as may be necessary to complete the Work. Contractor shall be solely responsible for the design, installation, operation, maintenance, and any failure of any component of the system.

B. Design and provide dewatering system using accepted and professional methods consistent with current industry practice to eliminate water entering the excavation under hydrostatic head from the bottom and/or sides. Design system to prevent differential hydrostatic head which would result in floating out soil particles in a manner termed as a “quick” or “boiling” condition. System shall not be dependent solely upon sumps and/or pumping water from within the excavation where differential head would result in a quick condition, which would continue to worsen the integrity of the excavation’s stability.

C. Provide dewatering system of sufficient size and capacity to prevent ground and surface water flow into the excavation and to allow all Work to be installed in a dry condition.

D. No additional payment will be made for any supplemental measures to control seepage, groundwater, or artesian head.

E. If dewatering equipment needed exceeds any of the following: 1) 6" pump volute; 2) 100,000 GPD total 24 hour (1 day) dewatering, and; 3) 1,000,000 GPD pump capacity, the Contractor shall be required to permit the dewatering system with the water management district.

F. Contractor shall be responsible for and shall repair without cost to the Owner any damage to work in place, or other contractor’s equipment, utilities, residences, highways, roads, railroads, private and municipal well systems, adjacent structures, natural resources, habitat, existing wells, and the excavation, including, damage to the bottom due to heave and including but not limited to, removal and pumping out of the excavated area that may result from Contractor’s negligence, inadequate or improper design and operation of the dewatering system, and any mechanical or electrical failure of the dewatering system.

PART 2 - PRODUCTS – (NOT USED)

PART 3 - EXECUTION

3.01 GENERAL REQUIREMENTS

A. Control, by acceptable means, all water regardless of source and be fully responsible for disposal of the water.

B. Confine discharge piping and/or ditches to available easement or to additional easement obtained by Contractor.

C. Control groundwater in a manner that preserves strength of foundation soils, does not cause instability or raveling of excavation slopes, and does not result in damage to existing structures. Where necessary to these purposes, lower water level in advance of excavation, utilizing wells, wellpoints, jet educators, or similar positive methods. Maintain the groundwater level to a minimum of 2 feet below excavations. Provide piezometers if directed by the Engineer to document the groundwater level is being maintained.

D. Commence dewatering prior to any appearance of water in excavation and continue until Work is

complete to the extent that no damage results from hydrostatic pressure, flotation, or other causes.

E. Open pumping with sumps and ditches shall be allowed, provided it does not result in boils, loss of fines, softening of the ground, or instability of slopes.

F. Install wells and/or wellpoints, if required, with suitable screens and filters, so that continuous pumping of fines does not occur. During normal pumping, and upon development of well(s), levels of fine sand or silt in the discharge water shall not exceed 5 ppm. Install sand tester on discharge of each pump during testing to verify that levels are not exceeded.

G. Control grading around excavations to prevent surface water from flowing into excavation areas.

H. Remove subgrade materials rendered unsuitable by excessive wetting and replace with approved backfill material at no additional cost to the Owner.

I. Walls shall not be exposed to water pressure before structural work at the next higher level has properly cured and the cantilever action of walls is eliminated.

3.02 MAINTAINING EXCAVATION IN DEWATERING CONDITION

A. Dewatering shall be a continuous operation. Interruptions due to power outages, or any other reason will not be permitted.

B. Continuously maintain excavation in a dry condition with positive dewatering methods during preparation of subgrade, installation of pipe, and construction of structures until the critical period of construction and/or backfill is completed to prevent damage of subgrade support, piping, structure, side slopes, or adjacent facilities from flotation or other hydrostatic pressure imbalance.

C. Provide standby equipment on site, installed, wired, and available for immediate operation if required to maintain dewatering on a continuous basis in the event any part of the system becomes inadequate or fails. If dewatering requirements are not satisfied due to inadequacy or failure of dewatering system, perform such work as may be required to restore damaged structures and foundation soils at no additional cost to Owner.

D. System maintenance shall include but not be limited to 24-hour supervision by personnel skilled in the operation, maintenance, and replacement of system components, and any other work required to maintain excavation in dewatered condition.

3.03 SYSTEM REMOVAL

A. Remove all dewatering equipment from the site, including wells and related temporary electrical service.

END OF SECTION

SECTION 02534

RECLAIMED WATER DISTRIBUTION PIPING

PART 1 - GENERAL

1.01 SUMMARY

A. General: This section includes the minimum requirements for installing reclaimed water systems, which includes the furnishing, installing, laying, jointing, and testing of all reclaimed water lines, hydrants, fittings, valves, and appurtenances, including necessary service connections required for a complete system as shown on the Drawings and specified herein. The Work shall also include such connections, reconnections, relocations, temporary services, abandonments, and all other provisions in regard to existing reclaimed water service operations and modifications required to perform the new work. Improvements not in accordance with these requirements must be approved by the Engineer or a representative thereof before the Work is accepted.

B. Section Includes:

1. Pipe and fittings for reclaimed water lines.

2. Tapping sleeves and valves.

3. Positive-displacement meters.

4. Pipe support systems.

5. Bedding and cover materials.

1.2 REFERENCE STANDARDS

A. American Association of State Highway and Transportation Officials:

1. AASHTO T 180 - Standard Method of Test for Moisture-Density Relations of Soils Using a 4.54-kg (10-lb) Rammer and a 457-mm (18-in.) Drop.

B. American Society of Mechanical Engineers:

1. ASME B16.1 - Gray Iron Pipe Flanges and Flanged Fittings: Classes 25, 125, and 250.

C. ASTM International:

1. ASTM A36/A36M - Standard Specification for Carbon Structural Steel.

2. ASTM A123.

3. ASTM A307 - Standard Specification for Carbon Steel Bolts, Studs, and Threaded Rod 60 000 PSI Tensile Strength.

4. ASTM D698 - Standard Test Methods for Laboratory Compaction Characteristics of Soil Using Standard Effort (12 400 ft-lbf/ft3 (600 kN-m/m3).

5. ASTM D1557 - Standard Test Methods for Laboratory Compaction Characteristics of Soil Using Modified Effort (56,000 ft-lbf/ft3 (2,700 kN-m/m3).

6. ASTM D1785 - Standard Specification for Poly(Vinyl Chloride) (PVC) Plastic Pipe, Schedules 40, 80, and 120.

7. ASTM D2241 - Standard Specification for Poly(Vinyl Chloride) (PVC) Pressure-Rated Pipe (SDR Series).

8. ASTM D3035 - Standard Specification for Polyethylene (PE) Plastic Pipe (DR-PR) Based on Controlled Outside Diameter.

9. ASTM D3139 - Standard Specification for Joints for Plastic Pressure Pipes Using Flexible Elastomeric Seals.

10. ASTM D6938 - Standard Test Method for In-Place Density and Water Content of Soil and Soil-Aggregate by Nuclear Methods (Shallow Depth).

11. ASTM F477 - Standard Specification for Elastomeric Seals (Gaskets) for Joining Plastic Pipe.

12. ASTM F 714-05 Standard Specification for Polyethylene (PE) Pipe (SDR-PR) Based on Outside Diameter.

D. American Water Works Association:

1. AWWA C104 - Cement-Mortar Lining for Ductile-Iron Pipe and Fittings.

2. AWWA C105 - Polyethylene Encasement for Ductile-Iron Pipe Systems.

3. AWWA C110 - Ductile-Iron and Gray-Iron Fittings.

4. AWWA C111 - Rubber-Gasket Joints for Ductile-Iron Pressure Pipe and Fittings.

5. AWWA C115 - Flanged Ductile-Iron Pipe with Ductile-Iron or Gray-Iron Threaded Flanges.

6. AWWA C151 - Ductile-Iron Pipe, Centrifugally Cast.

7. AWWA C153 - Ductile-Iron Compact Fittings.

8. AWWA C200 - Steel Water Pipe, 6 In. (150 mm) and Larger.

9. AWWA C203 - Coal-Tar Protective Coatings and Linings for Steel Water Pipe.

10. AWWA C205 - Cement-Mortar Protective Lining and Coating for Steel Water Pipe - 4 In. (100 mm) and Larger - Shop Applied.

11. AWWA C206 - Field Welding of Steel Water Pipe.

12. AWWA C207 - Steel Pipe Flanges for Waterworks Service, Sizes 4 In. Through 144 In. (100 mm Through 3,600 mm).

13. AWWA C208 - Dimensions for Fabricated Steel Water Pipe Fittings.

14. AWWA C213 - Fusion-Bonded Epoxy Coatings and Linings for Steel Water Pipe and Fittings.

15. AWWA C500 - Metal-Seated Gate Valves for Water Supply Service.

16. AWWA C600 - Installation of Ductile-Iron Mains and Their Appurtenances.

17. AWWA C605 - Underground Installation of Polyvinyl Chloride (PVC) and Molecularly Oriented Polyvinyl Chloride (PVCO) Pressure Pipe and Fittings.

18. AWWA C606 - Grooved and Shouldered Joints.

19. AWWA C700 - Cold-Water Meters - Displacement Type, Metal Alloy Main Case.

20. AWWA C701 - Cold-Water Meters - Turbine Type, for Customer Service.

21. AWWA C702 - Cold-Water Meters - Compound Type.

22. AWWA C707 - Encoder-Type Remote-Registration Systems for Cold-Water Meters.

23. AWWA C900 - Polyvinyl Chloride (PVC) Pressure Pipe and Fabricated Fittings, 4 In. Through 12 In. (100 mm Through 300 mm), for Water Transmission and Distribution.

24. AWWA C901 - Polyethylene (PE) Pressure Pipe and Tubing, 1/2 In. (13 mm) Through 3 In. (76 mm), for Water Service.

25. AWWA C905 - Polyvinyl Chloride (PVC) Pressure Pipe and Fabricated Fittings, 14 In. Through 48 In. (350 mm Through 1,200 mm), for Water Transmission and Distribution.

26. AWWA M6 - Water Meters - Selection, Installation, Testing, and Maintenance.

1.3 COORDINATION

A. Coordinate Work of this Section with termination of reclaimed water main connection at Site boundary, connection to existing reclaimed water system, and trenching.

1.4 PREINSTALLATION MEETINGS

A. Convene minimum one (1) week prior to commencing Work of this Section.

1.5 SUBMITTALS

A. Product Data: Submit manufacturer information regarding pipe materials, pipe fittings, valves, hydrants, hangers, and supports as required for completion of the Work.

B. The Contractor shall submit certificates of inspection in triplicate from the manufacturer that the pipe, valves, and fittings to be supplied have been inspected at the plant and meet the requirements of the Contract Documents. These certificates shall be submitted prior to beginning Work.

C. Field Quality-Control Submittals: Indicate results of Contractor-furnished tests and inspections.

D. Preconstruction Photographs: Submit digital files of color photographs of Work areas and material storage areas, as specified in Section 01700 – Closeout Contract.

E. Qualifications Statements:

1. Submit qualifications for manufacturer and installer.

1.6 CLOSEOUT SUBMITTALS

A. Section 01700 - Closeout Contract: Requirements for submittals.

B. Project Record Documents: Record actual locations of piping mains, valves, connections, thrust restraints, and invert elevations. All installed infrastructure shall be referenced to state plane coordinates.

C. Identify and describe unexpected variations to subsoil conditions or discovery of uncharted utilities.

1.7 QUALITY ASSURANCE

A. All pipe, valves, fire hydrants, and fittings shall be clearly marked with the name or trademark of the manufacturer, the batch number, the location of the plant, date of manufacture, strength designation and pressure rating.

B. All materials shall be free from defects impairing strength and durability, and be of the best commercial quality for the purpose specified. Materials shall be new, less than one year old from manufacture date. It shall have structural properties sufficient to safely sustain or withstand strains and stress to which it is normally subjected and be true to detail.

C. Manufacturer shall supply a certificate of application that PVC pressure pipe meets all requirements of AWWA C900/C905.

D. Flow Meters:

1. A copy of the affidavit of compliance from the manufacturer shall be submitted and shall certify that flow meters will be furnished in full compliance with the requirements of this specification and those of applicable AWWA standards.

2. Contractor shall submit actual test results for each reclaimed water meter by serial number and certify the accuracy of the meter.

1.8 QUALIFICATIONS

A. Manufacturer: Company specializing in manufacturing products specified in this Section with a minimum five (5) years of documented experience.

B. Installer: Company specializing in performing Work of this Section with a minimum five (5) years of documented experience in installation of liner materials.

1.9 DELIVERY, STORAGE, AND HANDLING

A. Inspection: Accept materials on Site in manufacturer's original packaging and inspect for damage.

B. Storage:

1. Store materials according to manufacturer instructions.

2. Block individual and stockpiled pipe lengths to prevent moving.

3. Do not place pipe or pipe materials on private property or in areas obstructing pedestrian or vehicle traffic.

4. Store PE and PVC materials out of sunlight.

C. Protection:

1. Protect materials from moisture and dust by storing in clean, dry location remote from construction operations areas.

2. Provide additional protection according to manufacturer instructions.

1.10 EXISTING CONDITIONS

A. Field Measurements:

1. Verify field measurements prior to fabrication.

2. Indicate field measurements on Shop Drawings.

1.11 WARRANTY

A. Section 01700 - Closeout Contract: Requirements for warranties.

PART 2 - PRODUCTS

2.1 RECLAIMED WATER PIPING

A. Ductile Iron Pipe:

1. Flanged ductile iron pipe shall comply with AWWA C115.

2. Bell and spigot ductile iron pipe shall comply with ANSI/AWWA C150/A21.50 AND ANSI/AWWA C151/A21.51,

3. Pipe shall be rated for a minimum working pressure of 200 psi working pressure or project requirements, whichever is greater plus a 100 psi minimum surge allowance and 2 to 1 factor of safety, using a Type II laying condition and a minimum depth of cover of four (4) feet.

4. The class or nominal thickness, net weight without lining, and casting period shall be clearly marked on each length of pipe.

5. Manufacturer's mark, country where cast, year in which the pipe was produced, and the letters "DI or "Ductile" shall be cast or stamped on each length of pipe.

6. Each pipe section shall include purple co-axial stripes on the exterior at 90-degree intervals.

7. Ductile iron pipe shall be manufactured in the United States of America.

8. Each pipe shall be subjected to a hydrostatic pressure test of at least 500 psi at the point of manufacture.

9. Pipes with cracked or chipped linings or defective pipes will be rejected.

10. Bituminous Outside Coating:

    a. Comply with AWWA C151

    b. Apply by airless spray method

11. Pipe Cement Mortar Lining:

    a. Comply with ANSI/AWWA C104/A21.4.

12. PE Encasement: Comply with AWWA C105.

13. Pipe Class:

    a. Comply with AWWA C151.

    b. Pipe Diameters 4-inch through 12-inch: Class 350 (minimum).

    c. Pipe Diameters 14-inch through 20-inch: Class 250 (minimum).

d. Pipe Diameters 24-inch and larger: Class 200 (minimum).

14. Fittings:

a. Material: Ductile iron; comply with AWWA C110.

b. Compact Fittings: Comply with AWWA C153.

c. Coating and Lining:

1) Bituminous Coating: Comply with AWWA C110.

2) Cement-Mortar Lining: Comply with AWWA C104.

15. Joints:

a. Joints shall be in accordance with ANSI/AWWA C111/A21.11 and be furnished complete with all necessary accessories.

b. Flanged Joints: Comply with AWWA C115.

c. Push-On Restrained Joints: Shall be restrained using grip gaskets or lock-rings

1) Manufacturers:

a) American: Fast-Grip Gaskets,

b) McWane: Sure Stop Restrained Gaskets,

c) U.S. Pipe: Field Lok Restrained Gaskets.

d) or approved equal

d. Locking Ring Restrained Joints:

1) Manufacturers:

a) American: Lok-Ring,

b) McWane: Super-Lock,

c) U.S. Pipe: TR Flex Gripper

d) EBAA Iron Works: Mega-Lug Restraint Harness – Series 1700,

e) Sigma: PVP-Lok Restraintor approved equal.

e. Restrained Fitting, Mega-Lug, DIP:

1) Restrained Fittings shall be ductile iron conforming to ANSI/AWWA C151/A21.51 specifications.

2) All restrained mega-lugs shall be furnished with accessories and have a minimum pressure resistance of 200 psi.

3) Manufacturers:

a) Sigma, One Lok Series SLD, or approved equal.

f. Flanged Joints:

1) Comply with AWWA/ANSI 115/A21.51.

2) Pipe shall be furnished complete with all accessories.

3) Gaskets: Unless otherwise shown or specified, gaskets shall be minimum 1/8-inch thick, full-face type. Gaskets shall be suitable for the service conditions specified, specifically designed for use with ductile iron pipe and fittings.

B. PVC Pipe (Push on Joint, 4" and Larger):

1. Comply with AWWA C900 and C905.

2. PVC pipe shall be DR-14 or DR-18 and have a pressure rating of no less than 200 psi.

3. Color: Purple.

4. Fittings: Mechanical joint ductile iron, complying with AWWA C111.

a. Restraint system shall be non-penetrating type specifically designed for PVC pipe.

5. Push-On Joints:

a. Comply with ASTM D3139 and ASTM F477.

b. Seals: PVC flexible elastomeric.

c. Solvent-cement couplings are not permitted.

6. Restrained Joints:

a. Where required, joints shall be restrained using restrained joint PVC piping system or bell restraint harnesses complying with all applicable AWWA specifications.

b. Manufacturers:

1) Sigma: PVP-LOK Restraint;

2) S&B Technical Products: Bull Dog Joint Restraints;

7. Restrained Fitting, Mega-Lug, PVC:

a. Restraint Fittings shall be ductile iron conforming to ANSI/AWWA C111/A21.11 specifications.

b. All restrained mega-lugs shall be furnished with accessories and have a minimum pressure resistance of 200 psi.

c. Manufacturers:

1) Sigma One-Lok, Series SLG,

2) or approved equal.

C. PVC Pipe (Solvent Weld):

1. Solvent Weld PVC Pipe shall conform to ASTM D1785, Schedule 80.

2. Pipe shall be purple in color. If color purple is not available, pipe shall be labeled in accordance with FDEP requirements.

3. Pipe shall have a pressure rating of no less than 200 psi.

4. Solvent Weld PVC Fittings shall conform to ASTM D2467.

5. Pipe Diameters: 3/4" to 2".

6. Fittings:

a. Solvent Weld PVC Fittings shall conform to ASTM D2466, ASTM D2467, and applicable AWWA standards.

b. Fittings shall have a pressure rating of no less than 200 psi.

D. PVC Pipe (Push on Joint, 2" Reclaimed Water Main):

1. Push on joint PVC pipe for 2" diameter reclaimed water mains shall conform to ASTM D2672, SDR 21 and applicable AWWA standards.

2. Pipe shall have a pressure rating of no less than 200 psi.

3. Pipe shall be purple in color.

4. Joints: Gasketed Bell Joint.

5. Fittings: Schedule 40 PVC conforming to ASTM D2466.

E. PVC Pipe (Thermal Butt-Fusion Joint):

1. Thermal Butt-Fusion Joint PVC Pipe shall be utilized for horizontal directional drills 4" diameter and larger, and shall conform to AWWA C900 and C905 standards.

2. PVC pipe shall be DR-18 and have a pressure rating of no less than 200 psi.

3. PVC pipe shall be purple in color.

2.2 ADAPTOR COUPLINGS

A. Coupling, Ductile Iron Pipe:

1. Ductile Iron Pipe Couplings shall conform to applicable AWWA standards.

2. Ductile Iron Pipe Couplings shall be ductile iron and shall have a minimum pressure rating of 200 psi.

B. Coupling, Ductile Iron Pipe, Restrained

1. Restrained Ductile Iron Pipe Couplings shall conform to applicable AWWA standards.

2. Restrained Ductile Iron Pipe Couplings shall be ductile iron and shall have a minimum pressure rating of 200 psi.

2.3 VALVES

A. Resilient Seat Gate Valves:

1. Resilient Seat Gate Valves shall conform to AWWA C509 or C515 and shall be provided for 2-inch diameter through 10-inch diameter reclaimed water mains.

2. Valve shall be pressure rated for 175 psi.

3. Valve Body: Cast Iron or Ductile Iron.

4. Valve Wedge: Cast Iron or Ductile Iron and completely encapsulated in EPDM.

5. Valve stems shall be o-ring sealed and non-rising stem design.

6. Valve Stems shall be Type 304 or 431 stainless steel.

7. Operating nut shall be 2” square and turn counter-clockwise to open the valve.

8. Joints:

a. Mechanical Joint end connections shall fully conform with ANSI/AWWA C111/A21.11 for 4” diameter and larger.

b. Flanged end connections shall fully conform with ANSI B16.1 for 4” diameter and larger.

c. Threaded Joint: 2” diameter only.

2.4 REPAIR SLEEVES

A. General: Couplings shall be furnished with the pipe stop removed. Couplings shall be provided with plain, Grade 27, rubber gaskets and with black, steel, track-head bolts with nuts.

B. Sleeve, Compression, Galvanized Steel:

1. Galvanized Steel Compression Sleeve shall be hot dip galvanized and shall have a protected gasket.

2. Sleeves shall conform to applicable AWWA standards.

3. Sleeves shall have a minimum pressure rating of 200 psi.

C. Sleeve, Compression, Brass:

1. Brass Compression Sleeves for joining 2" HDPE to 2" PVC Piping shall be brass and shall have a protected gasket.

2. Sleeves shall conform to applicable AWWA standards.

3. Sleeves shall have a minimum pressure rating of 200 psi.

D. Sleeve, Ductile Iron, Mechanical Joint:

1. Ductile Iron Mechanical Joint Sleeves shall conform to ANSI/AWWA C153 for compact fittings, three (3") inch through 36" diameter.

2. Sleeves shall be ductile iron long pattern with mechanical joint ends and shall be coal tar epoxy lined and bituminous sealed.

3. Sleeves shall be furnished with accessories.

4. Ductile Iron Mechanical Joint Sleeves shall have a minimum pressure rating of 200 psi.

2.5 VALVE BOXES AND LIDS

A. Valve Box:

1. Valve boxes shall not be deeper than five (5) feet without Owner approval.

2. Bottom Section:

a. Cast iron, ASTM A48, heavy duty screw type.

b. Cast iron screw valve box will be only type allowed in asphalt pavement.

c. Cast iron screw or sliding type valve box may be used in right of way as specified per project.

3. Valve Box Extension:

a. Cast iron, ASTM A48, heavy duty screw type extension.

b. For deep valves use six (6) inch ductile or cast iron pipe cut to proper length so only one valve box extension is used.

4. Valve Box Tops shall be cast iron, screw type and conform to ASTM A48.

5. Valve Box Tops shall be rated for H-20 traffic in conformance with AASHTO M-306.

B. Valve Box Lid:

1. Provide cast iron, ASTM A48, heavy duty, screw type, valve box, 5 ¼" shaft for non-pavement installations.

2. Valve Box Lids shall be rated for H-20 traffic in conformance with AASHTO M-306.

3. Cover shall be marked "RECLAIM".

C. Lockable Valve Box Lid:

1. Provide cast iron, ASTM A48, heavy duty, screw type, lockable type, valve box, 5 ¼" shaft

2. Lockable Valve Box Lids shall be for installation in low traffic pavement areas.

3. Valve Box Lids shall be rated for H-20 traffic in conformance with AASHTO M-306.

4. Cover shall be marked "RECLAIM".

2.6 MATERIALS

A. Backfill:

1. Bedding, cover, and soil backfill materials shall be in accordance with Section 125 of the Florida Department of Transportation Standard Specifications for Road and Bridge Construction.

2.7 FINISHES

A. Steel: Hot-dip galvanized after fabrication, according to ASTM A123/A123M.

B. Protective Coating: Coal-tar epoxy for below grade piping and epoxy paint for exposed piping.

2.8 ACCESSORIES

A. Pipe Markers: As specified in Section 33 05 97 - Identification and Signage for Utilities.

B. Steel Rods, Bolt, Lugs, and Brackets:

1. Comply with ASTM A36/A36M or A307, Grade A carbon steel unless otherwise shown or specified.

PART 3 - EXECUTION

3.1 EXAMINATION

A. Section 01700 - Closeout Requirements: Requirements for installation examination.

B. Contractor shall contact Sunshine 811 for location of existing utilities at 811 or 1-800-432-4770 a minimum of 48 hours prior beginning Work.

C. The Contractor shall field verify vertical and horizontal locations of all underground facilities in advance of construction to verify that no conflicts exist with the proposed pipe alignment and depth.

1. Should a conflict be discovered, the Contractor shall contact the Engineer immediately and provide all pertinent information for preparation of a remedial design.

D. Verify that existing reclaimed water main size, location, and invert are as indicated on Drawings.

3.2 PREPARATION

A. Section 01700 - Closeout Requirements: Requirements for installation preparation.

B. Preconstruction Site Photos:

1. As specified in Section 01 70 00 - Execution and Closeout Requirements.

2. Take photographs along centerline of proposed pipe trench; minimum one photograph for each 50 feet of pipe trench.

3. Show mailboxes, curbing, lawns, driveways, signs, culverts, and other existing Site features.

4. Include Project description, date taken, and sequential number on back of each photograph.

C. Pipe Cutting and Lining Repair:

1. Cut pipe ends square, ream pipe and tube ends to full pipe diameter, and remove burrs.

2. Use only equipment specifically designed for pipe cutting; use of chisels or hand saws is not permitted.

3. Grind edges smooth with beveled end for push-on connections.

4. Remove all traces of oil, grease, asphalt, dust, dirt, etc.

5. Remove damaged lining and clean any exposed metal by sanding or scraping. Sandblasting and power tool cleaning is also acceptable.

a. Remove any loose lining by chiseling, cutting, or scraping to well adhered lined area before patching.

b. Lining patch shall overlap remaining lining at least one (1) inch.

6. With the area to be sealed or repaired absolutely cleaned and thoroughly roughened, apply a coat of repair compound specified in the applicator's "Certificate of Application" as furnished and approved with the pipe submittal. The Contractor shall apply the repair compound in strict accordance with the manufacturer's written instructions.

7. The Contractor shall repair damaged coating and lining immediately, using the repair compound recommended by the manufacturer.

8. The cost of repair to cut pipe ends or damaged linings shall be incidental to construction and the Contractor shall absorb the cost thereof in the unit price specified for related items.

D. Remove scale and dirt on inside and outside before assembly.

E. Prepare pipe connections to equipment with flanges or unions.

3.3 INSTALLATION

A. Bedding and installation shall be Class B as shown on the Drawings unless otherwise specified or directed by the Engineer.

B. Handling and Cutting Pipe:

1. The Contractor shall exercise extreme care in handling and laying pipe and fittings to avoid damaging, scratching or marring machined surfaces, and abrasion of the pipe or fitting coating.

2. Any fitting showing a crack and any fitting or pipe that has received a severe blow that may have resulted in an incipient fracture, even though no such fracture can be seen, shall be marked as rejected and immediately removed from the Work.

3. Any pipe showing a distinct crack and in which it is believed there is no incipient fracture beyond the limits of the visible crack, the cracked portion, if so approved by the Engineer, may be cut off by and at the expense of the Contractor before the pipe is laid so that the pipe used may be perfectly sound. The cut shall be made in the sound barrel at a point at least twelve (12) inches from the visible limits of the crack.

4. Except as otherwise approved, all cuttings shall be done with a machine having rolling wheel cutters, or pipe saw adapted for that purpose. All cut ends shall be examined for possible cracks caused by cutting.

C. Abandoning Reclaimed Water Mains:

1. Reclaimed Water Mains Abandoned in Place: The Contractor shall cut the reclaimed water main as required to make connections or install plugs. That portion of the pipe to be abandoned and left in place shall be plugged at locations where the pipe was cut or

punctured. Plugging shall be accomplished by grouting the end or punctured area to the satisfaction of the Engineer.

2. Reclaimed Water Mains Abandoned in Place with Grout Fill: The Contractor shall cut the water main as required, install plugs, and fill the pipe with grout as shown on the Drawings.

3. Reclaimed water mains to be abandoned and removed shall be cut or disconnected as required.

D. Pipe Installation:

1. Comply with AWWA C605 as applicable.

2. Handle and assemble pipe according to pipe and gasket manufacturer instructions and as indicated on Drawings.

3. Steel Rods, Bolts, Lugs, and Brackets: Coat buried steel before backfilling.

4. Reclaimed Water Main Location:

a. Reclaimed water mains shall be constructed two (2) feet off the north or east right of way lines unless otherwise shown on the plans.

b. Reclaimed water lines to be constructed in easements shall be centered within the boundaries of the easement.

c. If trees or other structures should interfere with the alignment of the reclaimed water main, the reclaimed water main shall be adjusted towards the right of way line.

d. Minimum depths shall be 48” in all road rights of way and easements.

e. Minimum depths for reclaimed water mains shall be 36” in residential and conflict areas. The depth of cover shall be measured from the top of the reclaimed water main to the finished grade or centerline of roadway directly above the pipe.

f. Minimum horizontal clearance between parallel reclaimed water mains and potable water mains shall be three (3) feet.

g. Minimum horizontal clearance between parallel reclaimed water mains and sanitary sewer gravity mains shall be three (3) feet.

h. Minimum horizontal clearance between parallel reclaimed water mains and storm sewer mains shall be three (3) feet.

i. Minimum horizontal clearance between parallel reclaimed water mains and sanitary sewer force mains shall be three (3) feet.

j. Minimum vertical clearance between reclaimed water mains and gravity sanitary sewer mains crossing each other shall be six (6) inches, twelve (12) feet preferred.

k. Minimum vertical clearance between reclaimed water mains and storm sewer mains crossing each other shall be six (6) inches, twelve (12) inches preferred.

l. Minimum vertical clearance between reclaimed water mains and sanitary sewer force mains crossing each other shall be six (6) inches, twelve (12) inches.

m. Minimum vertical clearance between reclaimed water mains and potable water mains crossing each other shall be twelve (12) inches.

5. Route pipe in straight line, and re-lay pipe that is out of alignment or grade.

6. Ductile-Iron Piping and Fittings: Comply with AWWA C600.

7. PVC Pipe Piping and Fittings: Comply with AWWA C605.

8. Field Welding Materials: Comply with AWWA C206.

9. Flanged Joints: Do not use in underground installations except within structures.

10. To ensure correct fitting of pipe and couplings, all sleeve-type couplings and accessories shall be furnished by the supplier of the pipe.

11. High Points:

a. Install pipe with no high points other than shown on the Drawings.

b. If approved by the Engineer, minor changes in alignment may be permitted to avoid underground facilities.

c. If unforeseen field conditions arise that necessitate high points, install air-release valves as specified or as directed by the Engineer.

12. Bearing:

a. The pipe shall be laid on an unyielding foundation with uniform bearing under the full length of the barrel of the pipe.

b. Excavate bell holes to permit proper joint installation.

c. The spigot end of the pipe shall abut the base of the socket of the adjacent pipe in such a manner that there will be no gaps along the perimeter of the mating halves.

13. Do not lay pipe in wet or frozen trench.

14. The Contractor shall take all necessary precautions to prevent flotation of the pipe from flooding of the trench.

15. The pipe shall not be driven down to grade by striking it with a shovel handle, timber, rammer, or other unyielding object.

16. Immediately before jointing the pipe, the mating ends shall be thoroughly cleaned of all dirt, debris, and foreign material.

17. Prevent mud, sand, or other foreign material from entering pipe during placement.

18. At all times when pipe laying is not actually in progress, the open ends of the pipe shall be closed by temporary watertight plugs or by other approved means. If water is in the trench

when work is resumed, the plug shall not be removed until all danger of water entering the pipe has passed.

19. Allow for expansion and contraction without stressing pipe or joints.

20. Close pipe openings with watertight plugs during Work stoppages.

21. Any defective pipe that may have been installed shall be removed and replaced with sound pipe at no additional cost to the Owner.

E. Pipe Joint Assembly:

1. Assemble all joints in accordance with recommendations of the manufacturer.

2. If a lubricant is required to facilitate assembly, it shall have no detrimental effect on the gasket or on the pipe when subjected to prolonged exposure.

3. Proper jointing may be verified by rotation of the spigot by hand or with a strap wrench.

4. If unusual jointing resistance is encountered or if the insertion mark does not reach the flush position, disassemble the joint, inspect for damage, re-clean the joint components, and repeat the assembly steps.

5. Note that fitting bells may permit less insertion depth than pipe bells.

6. When mechanical equipment is used to assemble joints, care should be taken to prevent over-insertion.

F. Valves

1. Valves shall be installed as indicated on Drawings and according to manufacturer instructions.

2. Valves shall be set vertically so that stems form a vertical line. Care shall be taken to keep out dirt and sand, and no valve shall be operated until it has been cleaned of sand, grit, or other foreign material.

3. No valve operating nut shall be deeper than five (5) feet without Owner approval.

4. Valve Boxes:

a. All valves shall be fitted with heavy duty traffic rated valve box and cover..

b. Valve boxes shall be long enough to reach from the valve to finished ground level and shall be installed as recommended by the manufacturer.

c. Valve boxes shall have suitable barrel and shaft extension sections to cover and protect the valve bonnet section.

d. Extension sections fabricated by one piece of ductile iron are allowed. No more than one (1) shaft extension shall be used in any one (1) valve installation.

e. Valve box extensions shall be by same manufacturer as valve box or ductile iron pipe.

f. Valve boxes shall be installed in vertical alignment and positioned to facilitate the operation of the valve with a standard valve wrench. The box shall be installed as shown on the drawings and shall be set on firmly packed soil or bricks to prevent settlement and to prevent bearing on the valve or the main at any point.

g. Adjustment of valve boxes shall be subject to the approval of the Engineer. The Contractor shall maintain vertical alignment and position to permit operation of the valve with a standard valve wrench.

h. All valve boxes located in heavy traffic pavement areas shall include non-pop covers as specified.

i. Terminate locating wire for all sizes of PVC and HDPE reclaimed water mains in the valve boxes in accordance with the Drawings.

j. Valve Box Adjustment:

1) All valve boxes within the area of finished construction shall be adjusted to finish grade as shown and specified.

2) Valve boxes damaged during construction shall be replaced by the Contractor at no additional cost to the Owner. Removal and replacement of valve boxes during construction may be authorized, provided the Contractor insures that sufficient valve ties are available and on site in order to quickly locate the valve.

3) Adjustment of valve boxes shall be subject to approval of the Engineer.

G. Double continuous tracing wires shall be installed on all non-metallic pipes per Specification Section 33 05 97 – Identification and Signage for Utilities.

H. Early warning tape, shall be installed 12-inches to 18-inches above all sanitary sewer force mains.

I. Tapping Sleeves and Valves: As indicated on Drawings and according to manufacturer instructions.

J. Reclaimed Water Service Connections:

1. Reclaimed water services shall be installed at property corners and may be either single or double type services.

2. Reclaimed water meters shall be located at the right-of-way line and on the property owner’s side of the right of way line.

a. Locating wires shall be installed to a three o'clock, nine o'clock position, or directly under the service pipe.

b. Locating wire shall not be installed directly over the main. Plastic tie straps shall be used to secure the wire.

3. Reclaim water services under roads shall be installed in a casing.

    a. For one (1) inch diameter service piping, install in two (2) inch diameter PVC, HDPE, or steel casing.

    b. For two (2) inch diameter service piping, install in four (4) inch PVC, HDPE, or steel casing.

4. Existing reclaimed water services that are to be relocated to new mains shall be relocated as indicated on the plans. The Contractor shall install all new service pipe and fittings, including the back side of the meter box.

5. Where new reclaimed water services are to replace existing services, the entire existing service shall be removed to the main except for the valve or corporation stop controlling the service. This shall include the pipe and gooseneck assembly.

K. Bedding and Backfilling:

1. Excavation, trenching, and backfilling shall be in accordance with Section 125 of the Florida Department of Transportation Standard Specifications for Road and Bridge Construction.

2. Backfill around sides and to top of pipe with cover fill in minimum lifts of six (6) inches and compacted to the following requirements:

    a. Backfill under roadways: 98% Standard Proctor Density.

    b. Backfill not under roadways: 95% Standard Proctor Density.

3. Immediately after the pipe has been jointed and inspected, sufficient backfill shall be performed to protect the pipe adequately from injury and movement.

4. Maintain optimum moisture content of bedding material to attain required compaction density.

5. Where so indicated on the drawings or where directed by the Engineer, the pipe shall be supported by compacted granular fill or concrete cradle or encasement according to the applicable detail shown on the Drawings.

    a. Pipe bedded in compacted granular backfill shall not be supported on blocking, wedges, bricks, or anything except the bedding material.

    b. Where concrete cradle or encasement is required, the pipe shall be supported on solid concrete blocks or pre-cast concrete saddles which shall become part of the completed cradle or encasement.

    c. Where no other bedding is indicated, pipe shall be placed on a shaped bed of undisturbed material.

L. Cleaning and Flushing:

1. As the Work progresses, the interior of the reclaimed water piping shall be cleaned of all dirt, jointing material, and superfluous materials of every description.

2. Prior to the pressure and leakage tests, all piping shall be thoroughly cleaned of all dirt, dust, oil, grease, and other foreign matter. This work shall be done with care to avoid damage to any inside coating.

3. All lines shall be thoroughly flushed with clean water to clear the lines of all foreign matter.

3.4 PIPE SUPPORT AND THRUST RESTRAINT

A. The Contractor shall furnish and install all supports necessary to hold the piping and appurtenances in a firm, substantial manner at the lines and grades indicated on the Drawings or specified.

B. Where buried piping contains fittings, which raise or lower the centerline of the pipe, suitable socket clamps, tie rods, or other approved restraining devices shall be used to prevent movement of the fittings. The restraining devices shall be coated thoroughly and heavily with an approved bituminous paint.

C. All bends, tees, and other fittings in pipelines, and sleeve-coupled pipelines buried in the ground shall be backed with Class 1 concrete placed against undisturbed earth where firm support can be obtained or by the use of restrained joints. If the soil does not provide firm support, then suitable clamps, and accessories or restrained joints shall be provided to brace the fitting properly. Such items shall be coated thoroughly and heavily with an approved bituminous paint after assembly or, if necessary, before assembly.

D. Thrust blocks and joint restraints shall be provided as shown.

3.5 MAINTENANCE OF SERVICE

A. Maintenance of service is of the utmost importance and no service shall be discontinued without the consent of the Engineer for each interruption of said service.

B. In no case will any service be discontinued without at least 24 hours notice given to the Engineer by the Contractor.

C. To achieve minimum inconvenience to the public and users of the reclaimed water system, portions of the Work may have to be performed outside of normal working hours at no additional **cost to the Owner.**

3.6 CONNECTION TO EXISTING RECLAIMED WATER LINES

A. Connections to existing reclaimed water lines shall be as shown on the Drawings or as directed by the Engineer. Connection shall not occur until approval has been obtained from the Florida Department of Environmental Protection.

B. Connection of new to existing mains shall be performed in the normal accepted method for connecting mains and shall be done without unduly disrupting service. All connections are subject to the approval of the Engineer as to method, time, and location.

C. Construct locate wire(s) point of connection on ferrous pipe at non-ferrous pipe joints.

D. Where new lines are connected to existing lines, the Contractor shall take appropriate action to prevent existing lines from interfering with pressure testing of the Work. Failure to do so will not relieve the Contractor of the responsibility to properly pressure testing the entire system installed. The Contractor shall bear full responsibility for his action or inaction in this matter and shall not claim damages, injuries or additional compensation for his action or inaction.

E. At least 48 hours prior to beginning the actual connection operation, the Contractor shall excavate and expose the main to be tapped at the proposed location and shall so advise the Engineer to allow for inspection of the exposed facilities.

F. Reclaimed water from existing lines cut either by accident or during connection to proposed lines shall not be disposed of in a manner that would be injurious to residents, property, or structures.

3.7 PAVEMENT CROSSINGS

A. Bases, Sidewalk, Curb, and Driveway Repairs – The Contractor shall replace any and all bases, sidewalks, curbs and gutter, and driveways with materials and workmanship sufficient to give an equal and similar surface to the disturbed areas as existed before construction.

B. Pavement removal and replacement shall be in accordance with FDOT Standard Specifications for Road and Bridge Construction and as shown on the Drawings.

3.8 TOLERANCES

A. Section 01450 - Quality Requirements: Requirements for tolerances.

B. Install pipe to indicated elevation within tolerance of 5/8 inch.

3.9 FIELD QUALITY CONTROL

A. Section 01700 - Closeout Requirements: Requirements for testing, adjusting, and balancing.

B. Testing:

1. All parts of the Work including, but not being limited to, pipe, fittings, joints, valves, hydrants, and any other appurtenances shall be subjected to testing as described herein. To achieve this, all methods of testing shall be approved by the Engineer and FDEP

2. Except as otherwise directed, all pipelines shall be tested. Pipelines installed in excavation or bedded in concrete shall be tested prior to the backfilling of the excavation or placing of the concrete and exposed piping shall be tested prior to field painting.

3. All piping to operate under liquid pressure shall be tested in sections of approved length. The section of pipe being tested shall be limited to a maximum length of 2000 feet. For these tests the Contractor shall furnish clean water, suitable temporary testing plugs or caps, and other necessary equipment and all labor required, without additional

compensation. The Contractor shall furnish suitable pressure gauges, pumps, and measuring tank.

4. The Contractor shall be responsible for the cost of all water used for testing and flushing. The Contractor shall make suitable arrangements with the Owner for the monitoring of water consumption and locations to which water may be made available. Water charges shall be in accordance with City of Port Orange requirements.

5. Pressure test piping system as specified in Section 02684.

6. Compaction Testing:

   a. Comply with FDOT requirements for compaction testing.

   b. If tests indicate Work does not meet specified requirements, remove Work, replace, and retest.

END OF SECTION

SECTION 02535

SANITARY SEWER FORCE MAIN SYSTEMS

PART 1 - GENERAL

1.01 SECTION INCLUDES:

A. Piping and fittings

B. Valves

C. Testing

1.02 REFERENCES

A. American Water Works Association (AWWA) and American National Standards Institute (ANSI) latest edition:

1. ANSI/AWWA C105/A21.5 - Polyethylene Encasement for Ductile Iron Pipe Systems
2. ANSI/AWWA C110/A21.10 – Ductile Iron and Gray Iron Fittings, 3 Inch Through 48 Inch, for Water
3. ANSI/AWWA C111/A21.11 - Rubber Gasket Joints for Ductile Iron Pressure Pipe and Fittings
4. ANSI/AWWA C115/A21.15 – Flanged Ductile Iron Pipe with Ductile Iron or Gray Iron Threaded Fittings
5. ANSI/AWWA C150/A21.50 – Thickness Design of Ductile Iron Pipe
6. ANSI/AWWA C151/A21.51 - Ductile Iron Pipe, Centrifugally Cast, for Water
7. ANSI/AWWA C153/A21.53 - Compact Ductile Iron Fittings for Water Service
8. AWWA C517 – Resilient Seated Cast Iron Eccentric Plug Valves
9. AWWA C600 - Installation of Ductile Iron Water Mains and Their Appurtenances
10. AWWA C900 - PVC Pressure Pipe, and Fabricated Fittings, 4 Inch Through 12 Inch, for Water Distribution
11. AWWA C905 - PVC Pressure Pipe and Fabricated Fittings, 14 Inch Through 48 Inch
12. AWWA C906 – Polyethylene Pressure Pipe and Fittings, 4 Inch Through 63 Inch for Water Distribution and Transmission

B. American Society for Testing and Materials (ASTM) latest edition:

1. ASTM A307 – Carbon Steel Bolts and Studs
2. ASTM A536 – Ductile Iron Castings
3. ASTM D1248 – Polyethylene Plastics Extrusion Materials for Wire and Cable
4. ASTM D1784 – Rigid PVC Compounds and CPVC Compounds
5. ASTM F1674 – Test Method for Joint Restraint Products for Use with PVC Pipe

6. ASTM F2164 – Field Leak Testing of Polyethylene (PE) Pressure Piping Systems Using Hydrostatic Pressure

1.03 SUBMITTALS

A. Product data for gaskets, pipe, joints, joint restraint, fittings, valves, coatings.

B. Product data for all locate wire, tape, markers, warning tape

C. Piping specialties and installation details.

D. Product data and painting schedule for field applied paint and coatings.

E. Final coat paint colors.

1.04 PRODUCT DELIVERY STORAGE AND HANDLING

A. Exercise care in transporting and handling pipe and fittings in order to avoid damage to materials or coatings. Lifting shall be by hoist or on skids when hand lifting is not feasible. Dropping shall not be permitted. Store pipe as recommended by the manufacturer. Damaged pipe and fittings shall be replaced.

PART 2 - PRODUCTS

2.01 DUCTILE IRON PIPE

A. Buried pipe shall conform with ANSI/AWWA C150/A21.50 and C151/ A21.51 and shall have a minimum working pressure of 150 psi. Buried pipe shall comply with the following pressure class (PC) designations unless otherwise indicated on the Drawings:

1. 12-inch diameter and smaller = PC 350

2. 14-inch through 24-inch diameter = PC 250

3. 30-inch through 64-inch diameter = PC 200

B. Exposed pipe 4” and larger shall be flanged and shall conform with AWWA/ANSI C115/A21.15, and shall have a minimum working pressure of 150 psi. Flanged pipe shall comply with the following thickness class (TC) designations unless otherwise indicated on the Drawings:

1. 4-inch diameter = TC 54

2. 6-inch through 24-inch diameter = TC 53

C. All flanges shall be class 125 and shall be fully machine faced after being screwed tightly on the pipe. Bolts and nut shall conform to ASTM A307, Grade B.

2.02 FITTINGS FOR DUCTILE IRON AND PVC PIPE

A. Fittings shall be manufactured of ductile iron, conforming to ANSI/AWWA C110/A21.10 or ANSI/AWWA C153/A21.53.

B. Fittings shall be Harco, Multi-Fittings, Plastic Trends, Head, Tyler Union, or approved equal.

C. All full body (C110/A21.10) fittings shall be pressure rated to 250 psi, minimum. All compact fittings (C153/A21.53) shall be pressure rated to 350 psi, minimum.

D. Fitting joints shall be compatible with the type of pipe in use or specified, e.g., flange fittings for flange pipe and mechanical joint for mechanical joint pipe and push-on joint pipe.

2.03 LININGS AND COATINGS FOR DUCTILE IRON PIPE AND FITTINGS

A. Interior lining for pipes and fittings shall be:

1. Minimum 40 mils dry film thickness (60 mils nominal) of ceramic epoxy lining, as manufactured under the name of “Protecto 401", or equal.

B. Exterior coating for buried pipe and fittings shall be a petroleum asphaltic coating in accordance with ANSI/AWWA C110/A21.10.

C. All exposed pipe and fittings shall be painted with a three-coat system. The first coat shall be primer, 2.5-3.5 mil Dry Film Thickness (DFT) Tnemec Series 135 ChemBuild or approved equal; the intermediate coat shall be 4.0-10.0 mil DFT Tnemec Color Hi-Build Epoxoline II Series N69 or approved equal, and the final coat shall be 2.0-3.0 mil DFT Tnemec EnduraShield Series 73 or approved equal. The final coat paint color shall be as selected by the local utility.

2.04 JOINTS FOR DUCTILE IRON PIPE AND FITTINGS

A. Mechanical and push-on joints shall be rubber gasketed, conforming to ANSI/AWWA C111/A21.11. Mechanical joint bolts and nuts shall conform to ASTM A307, Grade B. Ductile iron glands shall be provided with ductile iron pipe.

B. Lubricants other than that furnished by the pipe manufacturer with the pipe shall not be used.

2.05 RESTRAINED JOINTS FOR DUCTILE IRON PIPE AND FITTINGS

A. Restrained joints for ductile iron pipe bell joints shall be Smith-Blair Cam-Lock Series 111, American Fast Grip Gasket, McWane Sure Grip 350 Gasket, U.S. Pipe Field Lok 350 Gasket, or EBAA Iron Mega Lug Series 1100HD.

B. Restrained joints for ductile iron pipe and fitting mechanical joints shall be EBAA Iron Mega Lug Series 1100, Star Grip Series 3000, or Tyler Union Tuf-Grip Series TLD.

C. Locking bell joint restraint shall be American Flex Ring Joint, American Lok-Ring Joint, or U.S. Pipe TR-Flex.

D. All pipe joints shall be restrained. Existing piping impacted by construction will be restrained as specifically identified on the plans.

2.06 PVC PRESSURE PIPE

A. Pipe 4 inch through 12-inch diameter shall conform to AWWA C900.

B. Pipe 14 inch through 30-inch diameter shall conform to AWWA C905.

C. Pipe shall conform to ASTM D1784, Type I, Grade I, 4000 psi design stress.

D. 4 inch through 12-inch diameter pipe shall be class 235 (DR 18). Pipe shall contain markings on each section showing conformance to the above specifications.

E. PVC pipes shall be color coded green and stenciled (0.75-inch lettering on the pipe in at least three areas per pipe section) “Sewer Force Main”.

2.07 PVC PRESSURE PIPE JOINTS

A. Joints shall be rubber gasketed conforming to AWWA C900 or C905

B. The bell shall be integral with the pipe and of equal or greater pressure rating. The bell of pipe and fittings using push-on joints shall have an integral groove to retain the gasket in place

C. Provide adapters as required to join PVC pipe to pipe, fittings and equipment of other materials.

2.08 RESTRAINED JOINTS FOR PVC PRESSURE PIPE

A. Restrained joints for PVC pipe mechanical joints shall be Smith-Blair Cam-Lock Series 120, Star Pipe Stargrip Series 1000 or 4000, or EBAA Iron Mega Lug Series 2000PV or Series 2500 (C900 PVC), or approved equal.

B. Restrained joints for HDPE pipe push on joints shall be EBAA Iron Mega Lug Series 15PF00 or approved equal.

C. All pipe joints shall be restrained.

2.09 HDPE PRESSURE PIPE

A. Pipe 4 inch through 12-inch diameter shall conform to AWWA C906.

B. Pipe shall conform to ASTM F714.

C. 4 inch through 12-inch diameter pipe shall be class 235 (DR 18). Pipe shall contain markings on each section showing conformance to the above specifications.

D. HDPE pipes shall be color coded green and stenciled (0.75-inch lettering on the pipe in at least three areas per pipe section) “Sewer Force Main”.

2.10 HDPE PRESSURE PIPE JOINTS

A. Joints shall be rubber gasketed conforming to AWWA C906

B. Provide adapters as required to join HDPE pipe to pipe, fittings and equipment of other materials.

2.11 RESTRAINED JOINTS FOR HDPE PRESSURE PIPE

A. Restrained joints for HDPE pipe mechanical joints shall be Star Pipe Stargrip Series 4000, or EBAA Iron Mega Lug Series 2000PV, Sigma One-Lok SLC, or approved equal.

B. Restrained joints for PVC pipe push on joints shall be EBAA Iron Mega Lug Series 1500 Series 1600 (C900 PVC), or Series 2800 (C905 PVC), Star Pipe Stargrip Series 1100 or 1200, or approved equal.

C. All pipe joints shall be restrained.

2.12 GENERAL VALVE REQUIREMENTS

A. Where required for satisfactory operation of valves, provide valve operators, extension stems, stem guides, cast iron valve boxes, floor boxes, handwheels, operator stands, position indicators, and other valve appurtenances. Extension stems shall be complete with guide bearings, wrench nut, and tee handle wrench. All machinery stuffing boxes shall be packed with material selected for the service intended. Maintain all packing until final acceptance by the

Owner.

B. Manufacturer's name, service, and pressure marking shall be cast into the body.

C. Valve operators shall be sized for operation at the pressure and flow conditions required for proper operation.

D. Manual operators for exterior buried valves shall conform to AWWA C504.

E. Extension stems shall be provided for all valves in buried locations and in other locations where indicated on the Drawings.

F. Extension stems shall be fabricated from solid steel shafting not smaller in diameter than the stem of the valve or from galvanized steel pipe having an internal diameter not smaller than the diameter of the valve stem. Stem couplings shall be both threaded and keyed to the coupled stems and shall be of standard design and construction. Pipe couplings will not be acceptable.

G. Stems for buried valves shall extend to within 6 inches of the surface of the ground. Each extension stem shall be connected to the valve operator with a suitable universal joint type coupling. All connections shall be pinned. Each extension stem shall be provided with spacers which will center the stem in a valve box having an inside diameter of approximately 5 inches and shall be equipped with a standard AWWA wrench nut as described in AWWA C500, except where handwheels are indicated.

2.13 LININGS AND COATINGS FOR VALVES

A. The interior and exterior of the valve shall be coated with an NSF/ANSI 61 approved fusion bonded epoxy.

B. Exterior coating of exposed valves shall be factory applied rust inhibiting epoxy primer, minimum 3 mils dry film thickness.

C. After installation, exterior surfaces shall be painted with a two coat system. The first coat (intermediate coat) shall be 4.0-10.0 mil DFT Tnemec Color Hi-Build Epoxoline II Series N69 or approved equal, and the final coat shall be 2.0-3.0 mil DFT Tnemec EnduraShield Series 73 or approved equal. The final coat paint color shall be as selected by the City.

2.14 PLUG VALVES

A. Plug Valves shall be Cast Iron suitable for wastewater service with pressures up to 250 psig, and shall be quarter-turn, non-lubricated, eccentric type with resilient faced plug, manufactured and tested in accordance with AWWA C517.

B. Port areas of not less than 100% of pipe area shall be supplied on all valves.

C. The valve seat shall be a welded overlay of 95% pure nickel applied directly to the body on a pre-machined, cast seating surface and machined to a smooth finish.

D. Shaft seals shall consist of V-type packing in a fixed gland with an adjustable follower designed to prevent over compression of the packing and to meet design parameters of the packing manufacturer.

E. Removable, slotted shims shall be provided under the follower flanges to provide for adjustment and prevent over tightening.

F. The valve body and cover shall be constructed of ASTM A126 Class B cast iron for working pressures up to 175 psig. The words "SEAT END" shall be cast on the exterior of the body seat

end.

G. The plug shall be of one-piece construction and made of ASTM A536 Grade 65- 45-12 ductile iron and fully encapsulated with a resilient facing.

H. Radial shaft bearings shall be constructed of self-lubricating type 316 stainless steel. The top thrust bearing shall be Teflon. The bottom thrust bearing shall be Type 316 stainless steel. The packing shall be adjustable and replaceable, and the bonnet shall be bolted. All bolts, nuts and washers shall be 316 stainless steel for buried, non-buried, and pit installed service.

I. Valves 4 inches in diameter and smaller shall be lever or wrench nut operated. Valves larger than 4 inches shall be equipped with totally enclosed worm gear actuators, except where automatic operation is specified.

J. Standard plug valves shall be Clow F5412/ F5413, Valmatic 5600/5800, DeZurik Series PEC, M&H 1820, Pratt PV, or approved equal.

2.15 SWING CHECK VALVES

A. Below grade buried swing check valves shall be ductile iron body, with rubber encapsulated ductile iron reversible disc, resilient seated disc, full flow area, and shall conform to AWWA C508. Valves shall be pressure rated at a minimum of 250 PSI working pressure.

B. Below grade non-buried or above grade swing check valves shall be iron body, bronze mounted, with rubber faced disc, Class 125 flanged ends, removable inspection cover, O-ring sealed stuffing box, with an external weighted lever, and shall conform to AWWA C508.

C. Acceptable manufacturers: Val-Matic 500 Series

2.16 TAPPING VALVES

A. Tapping valves shall be resilient seated gate valves and shall conform to the requirements of AWWA C509. Tapping Valves shall be American Flow Control Series 2500, Clow Series 2638 or 2639, Mueller Series A2361, or approved equal.

2.17 AIR RELEASE VALVES

A. Air release valves shall be combination valves that permit automatic release of large quantities of air from an empty pipe during filling and to permit air to enter the pipeline when the line is being emptied. The valve shall be capable of discharging accumulated air in the line while the line is operating under a pressure of 150 psi. Float material shall be stainless steel. Attachment shall be by means of threaded pipe connections. Valves shall be vented to the atmosphere by means of threaded piping and shall discharge into drainage areas.

B. Air release valves shall be ARI D-025P (Plastic).

2.18 VALVE BOXES

A. All buried valves shall be provided with adjustable valve boxes approximately 5 inches in diameter and shall be heavy duty traffic rated.

B. Valve boxes shall be cast iron. Valve box lids shall be cast iron H-20 load rated.

C. Valve boxes shall be of sufficient length to operate all valves buried in the ground. Valve boxes shall consist of base, center section, and top section with cover. All valve box extensions shall be cast iron.

D. Valve box lids in paved areas shall be lockable.

E. Valve boxes located in unpaved areas shall be Slip Type design to permit movement of the top section without transmitting forces onto the valve body.

F. Valve boxes shall have valve box covers with the inscription "SEWER" cast thereon.

G. All valve box covers shall be painted with a three coat system. The first coat shall be primer, 2.5-3.5 mil Dry Film Thickness (DFT) Tnemec Series 135 ChemBuild or approved equal; the intermediate coat shall be 4.0-10.0 mil DFT Tnemec Color Hi-Build Epoxoline II Series N69 or approved equal, and the final coat shall be 2.0-3.0 mil DFT Tnemec EnduraShield Series 73 or approved equal. The final coat paint color shall be green as approved by the local utility.

H. Acceptable manufacturers: Tyler Union, Sigma Corporation, Star Pipe Products.

2.19 PIPELINE IDENTIFICATION TAPE

A. Identification tape shall be an inert plastic film specifically formulated for prolonged underground use. Minimum thickness 5 mils, width 3 inches, letter size 1 inch. Lettering shall be continuous.

B. Tape shall be the standard product of a manufacturer regularly engaged in the supply of this tape. Provide tape with adhesive backing for attachment to pipe.

C. Identification tape shall be color coded brown with black or white lettering "SEWER FORCE MAIN".

2.20 ELECTRONIC MARKER BALLS (NOT USED)

2.21 PIPELINE WARNING TAPE

A. Warning tape shall be 3-inch wide solid aluminum foil encased in a protective high visibility plastic jacket, for identification and warning purposes. It shall be color coded brown or green with black lettering “CAUTION: BURIED FORCE MAIN BELOW

2.22 LOCATING WIRE

A. Locating wire shall be color-coded #14 continuous insulated wire. Color coding shall be similar to warning tape colors.

PART 3 - EXECUTION

3.01 GENERAL INSTALLATION REQUIREMENTS

A. All lengths of pipe shall be dimensioned accurately to measurements established at the site and shall be worked into place without springing or forcing.

B. Cut all pipe and drill all holes that may be necessary. Cut sections of pipe shall be reamed or filed to remove all burrs. The pipe interior and joints shall be thoroughly cleaned before being installed and kept clean during construction.

C. All changes in direction shall be made with fittings or approved joint deflection. Bending of pipe, except copper and polyethylene, is prohibited. Joint deflection shall not exceed 75 percent of the manufacturer’s recommended maximum deflection.

D. Any transition from one pipe size to another shall be made with a reducing fitting. Reducing bushings are prohibited except where specifically indicated on the Drawings or approved by the Engineer.

E. Make adequate provision for expansion and contraction of piping.

F. Trenching, bedding and backfilling shall be in accordance with Section 02320.

G. Valves shall be installed in all pipe ahead of appliances and equipment not furnished with stops, and elsewhere as required for proper control and isolation of sections of systems for maintenance purposes.

H. Minimum cover over pipe shall be 36 inches.

3.02 CONCRETE CRADLES AND ENCASEMENT

Concrete cradles and encasement shall be as indicated on the Drawings, or as directed by the Engineer. All concrete cradles and anchors shall be of Class B concrete.

3.03 SEPARATION OF FORCE MAINS AND POTABLE WATER LINES

A. The outside of wastewater force mains shall be separated horizontally a minimum of six feet from the outside of any existing or proposed water main.

B. Wherever possible, wastewater force mains shall cross under existing or proposed water mains. Whether the wastewater force main crosses over or under the water main, the outside of the force main shall be at least 12 inches from the outside of the water main. At the crossing, the proposed pipe joints shall be arranged so that all water main joints are a minimum of six feet from the joints of wastewater force mains.

C. The following are acceptable alternative construction features to be considered for cost evaluation with no guarantee they will be approved for implementation where it is not possible to meet the separation requirements. Exceptions from meeting the pipe separation requirements, without mitigation, shall be allowed only by FDEP if technical or economic justifications for each exception provided by the Engineer are acceptable to FDEP and are only to be implemented upon receipt of expressed written consent from the Engineer and approval from FDEP on a case by case basis. All possible measures to achieve compliance with the pipe separation requirements shall be considered first along with design changes to meet the requirements before the Engineer submits a justification of an exception to FDEP for approval. Implementation of these measures without the expressed written consent of the Engineer and approval by FDEP could result in the requirement that the installed unapproved measures be removed and replaced at no cost to the Owner.

1. Where a sewer force main is less than the required minimum horizontal distance from a water main or where a force main crosses a water main and joints in the force main are less than the minimum required distance between the joints in the water main:

   a. Use of welded, fused, or otherwise restrained joints for either pipeline.

   b. Use of watertight casing pipe or concrete encasement at least four inches thick for either pipe.

2. Where a force main is less than three feet horizontally a water main and or where a force main crosses a water main at less than the required minimum separation:

   a. Use of pipe or casing pipe, having high impact strength (at least equal to 0.25 inch thick

ductile iron pipe), or concrete encasement at least four inches thick for both the water main and the force main.

3.04 PLUGS

A. Installed piping systems shall be temporarily plugged at the end of each day's work, or other interruption to progress on a given line. Plugging shall be adequate to prevent entry of small animals or persons into the pipe or the entrance or insertion of deleterious materials.

B. Standard plugs shall be inserted into all dead-end pipes, tees, or crosses; spigot ends shall be capped; flanged and mechanical joint ends shall have blind flanges of metal.

C. Plugs installed for pressure testing shall be blind flanges fully secured and blocked to withstand the test pressure.

D. Where plugging is required because of contract division or phasing for later connection, the ends of such lines shall be equipped with a permanent type plug or blind flange. Installation or removal of such plugging shall be considered incidental to the work.

3.05 RESTRAINED JOINTS FOR HDPE PRESSURE PIPE

A. Mechanical joining to other piping materials (fittings, etc.) shall be accomplished with mechanical joint adapters. Mechanical joint adapters shall be used to connect HDPE together with other pipe materials.

B. Mechanical joint adapters shall be pressure rated the same as the pipe. Mechanical joint adapters shall be heat fused to the pipe as outlined in the heat fusion section.

C. Gaskets shall be used between the polyethylene pipe and the mechanical joint adapters when recommended by the HDPE pipe manufacturer. Sufficient torque shall be applied evenly to the bolts to prevent leaks. After initial installation and tightening of mechanical joint connections, allow the connections to set for a few hours. Then conduct a final tightening of the bolts.

D. Lubricate nuts and bolts with oil or graphite prior to installation.

3.06 DUCTILE IRON PIPE

A. Mechanical joints: install according to the manufacturer's specifications. Socket and gasket shall be clean and gasket shall be properly centered before joint is made.

B. Push-On Type Joints: Remove any foreign matter in the gasket seat, wipe gasket clean, flex and place in socket. Apply thin film of lubricant to inside surface of gasket. Complete joint assembly by forcing the plain end of the entering pipe past the gasket until it makes contact with the bottom of the socket.

C. Flanged Joints: Bolt flanged joints with care so there is no restraint on the opposite end of the piece, which would prevent pressure from being evenly and uniformly applied upon the gasket. The pipe or fitting must be free to move in any direction while bolting. Gradually tighten bolts, each in turn, at a uniform rate of gasket compression around the entire flange.

3.07 O-RING TYPE PUSH-ON JOINTS FOR PVC PIPE

A. Clean the pipe end and the bell thoroughly. Insert O-Ring gasket, making certain it is properly oriented. Lubricate the spigot well with an approved lubricant; do not lubricate the bell or O-ring. Insert the spigot end of the pipe carefully into the bell until the reference mark on the spigot is flush with the bell.

B. Field cut pipe shall be beveled, have all burrs removed, and shall have a reference mark applied the correct distance from the end.

3.08 BURIED AND EXPOSED VALVES

A. Buried valves 6 inch diameter and larger shall be set on a foundation of solid concrete or stone not less than 8 inches thick nor less than one cubic foot in volume. Foundations shall be set on firmly compacted ground.

B. The height of the valve and its supporting foundation shall conform to the height of the connecting pipe. Valves shall be set in a vertical position, except where indicated on the Drawings or as determined in the field to require a horizontal installation as determined by the Engineer and Owner. Where valves are required to be installed in a horizontal position, provide with a bevel gear side actuator.

C. Exposed valves shall be installed in a vertical position wherever possible. Unless otherwise indicated or directed by the Engineer, valve stems shall never be below a horizontal position.

D. Open and close each valve observing full operation prior to installing successive lengths of pipe.

3.09 AIR RELEASE VALVES

Air release valves shall be placed at high points of the pipeline to permit escape of trapped air. The valve size, location and method of installation shall be indicated on the Drawings or as directed by the Engineer.

3.10 VALVE BOXES

A. Boxes shall rest on the valve and shall be adjusted so that the cover may be set flush with paving; in areas without paving, set the cover as directed by the Engineer. Boxes shall be set to allow equal movement above and below finish grade.

B. The base of the box shall be centered over the valve, and the top of the base section shall be approximately on line with the nut on top of the valve stem. The entire assembly shall be plumb.

3.11 ELECTRONIC MARKER BALLS – NOT USED

3.12 INSTALLATION OF IDENTIFICATION AND WARNING TAPE

A. Install identification tape on all pipelines. Place tape as follows:

1. 2-inch through 8-inch diameter pipe - center along top half of pipe
2. 10-inch through 18-inch diameter pipe - place along both sides of the top half of pipe
3. 20-inch diameter and larger pipe - place on both sides of top half of pipe with a third strip centered along top half of pipe

B. Place tape from joint to joint on every section of pipe.

C. Install warning tape along all pipelines. Install 1 foot below grade centered above the pipe.

3.13 LOCATOR WIRE

A. Install locator wire along all pressurized pipelines 2-inch diameter and larger.

B. Terminate locator wires at top of the valve box with 12" of extra wire.

C. Test the locate wire for continuity and submit report documenting the continuity testing. Repair or replace locate wire at failed test locations as directed by Owner.

3.14 TESTING GENERAL REQUIREMENTS

A. Hydrostatic testing shall be in accordance with AWWA C600 (Ductile iron force mains), AWWA C605 (PVC force mains) and ASTM F2164 (polyethylene force mains).

B. Test procedures and method of disposal of water shall be approved by the Engineer. All tests shall be made in the presence of the Engineer and utility. Preliminary tests made by the Contractor without being observed by the Engineer will not be accepted. Notify the Engineer and the utility companies at least 48 hours before any work is to be inspected or tested.

C. All defects in piping systems shall be repaired and/or replaced and retested until acceptable. Repairs shall be made to the standard of quality specified for the entire system.

D. Sections of the system may be tested separately, but any defect which may develop in a section previously tested and accepted shall be promptly corrected and retested. Pressure tests shall be made between valves to demonstrate ability of valves to sustain pressure.

E. Provide all necessary test equipment. Increments on gages used for pressure pipe testing shall be of scaled to the nearest 1 psi. Gages, pumps, and hoses shall be in good working order with no noticeable leaks.

F. Tests for any exposed piping shall be made before covering and insulation is placed.

G. The pressure and leakage test for buried piping shall be made after all jointing operations are completed and restraints have been in place at least seven days. Lines tested before backfill is in place shall be retested after compacted backfill is placed.

H. Sections of piping between valves and other short sections of line may be isolated for testing. If shorter sections are tested, test plugs or bulkheads required at the ends of the test section shall be furnished and installed by Contractor, together with all anchors, braces, and other devices required to withstand the hydrostatic pressure without imposing any thrust on the pipeline. Contractor shall be solely responsible for any damage that results from the failure of test plugs or supports.

I. All items including valves and controls shall be given a thorough test. The entire system shall be operated for two days to prove compatibility of equipment and to achieve proper adjustment for operation. Valves, pipes, tanks, and other items that are non-operating or occasional-operating shall be tested for ability to meet design criteria.

3.15 SEQUENCE OF TESTING

A. The sequence of testing shall be as follows:

1. Conduct pressure and leakage testing.

3.16 PRESSURE AND LEAKAGE TESTING (PVC AND DI MAINS)

A. Piping shall be slowly filled with water and all air expelled. Care shall be taken that all air valves are installed and open in the section being filled, and that the rate of filling does not exceed the venting capacity of the air valves.

B. Apply hydrostatic test pressure of 100 psi for 10 minutes and for such additional period necessary for the Engineer to complete the inspection of the line under test. Do not exceed pipe manufacturer's suggested time duration at the test pressure. If defects are noted, repairs shall be made and the test repeated until all parts of the line withstand the test pressure.

C. Apply leakage test pressure of 100 psi. Maintain pressure at a maximum variation of 5 percent during the entire leakage test. The duration of the leakage test shall be two hours minimum, and for such additional time necessary for the Engineer to complete inspection of the section of line under test. Leakage measurements shall not be started until a constant test pressure has been established. The line leakage shall be measured by means of a water meter installed on the supply side of the pressure pump.

D. No leakage is allowed in exposed piping, buried piping with flanged, threaded, or welded joints or buried non-potable piping in conflict with potable water lines.

E. The testing allowance shall be defined as the quantity of water that must be applied to the pipe section being tested to maintain a pressure within 5 psi of the specified hydrostatic test pressure. No installation will be accepted if the quantity of makeup water is greater than that determined by the following formula:

$$L = \frac{S \times D \times P^{0.5}}{148{,}000}$$

L = Testing Allowance (quantity of makeup water) in gallons per hour
S = Length of line being tested, in feet
D = Nominal internal diameter (in inches) of the pipe.
P = The average test pressure during the pressure test, in pounds per square inch (gauge) This actual pressure shall be determined by finding the difference between the average elevation of all tested pipe joints and the elevation of the pressure gauge and adding the difference in elevation head to the authorized test pressure.

F. All leaks shall be repaired by removing and replacing defective pipe and joints with pipe and joints free of defects, after which the lines shall be retested. Such repair and retesting shall be done until the lines pass the specified retest.

G. All apparent leaks discovered within one year from the date of final acceptance of the work by the Owner shall be located and repaired by Contractor, regardless of the total line leakage rate.

3.17 PLACING THE FORCE MAIN INTO SERVICE

The force main can only be placed into service once clearance is received from FDEP, followed by approval by the Engineer and Owner.

END OF SECTION

SECTION 02665

PIPE INSTALLATION

PART 1 - GENERAL

1.01 DESCRIPTION

A. This section includes materials, testing and construction of pipelines and horizontal earth boring (HEB).

1.02 STANDARDS

A. Determine the density of soil in place by the sand cone method, ASTM D1556; by nuclear methods, ASTM D6938; or by the rubber balloon method, ASTM D2167.

B. Determine optimum laboratory moisture-density relations of cohesive soils by ASTM D1557 (modified Proctor).

C. Sample backfill materials by ASTM D75.

D. For cohesive soils, "relative density" is the ratio, expressed as a percentage, of in the in place dry density to the laboratory maximum dry density as determined by ASTM D 1557 (modified Proctor).

E. Determine the relative density of cohesionless soil by ASTM D4253.

1.03 SUBMITTALS

A. Submit copies of a certification from a testing laboratory that the material used for all backfills and structural backfills meets the specified criteria and contains less than 1% by weight asbestos.

B. Submit certification for sheeting, shoring and bracing.

C. For HEB related work, submit the following:

1. Certification that the Contractor (or subcontractor) is licensed to perform the work specified including possession of a Florida State Underground Utility Contractor’s License, a Florida State General Contractor’s license (or local equivalent recognized by the appropriate licensing board).

2. Certification that equipment operator has appropriate experience installing piping using HEB methods.

3. List of equipment and boring method. Air and/or water jetting shall not be allowed.

D. For pipelines to be abandoned in place, submit drawings showing location and length of abandoned segment, method or fitting to be used to seal each point of connection, and written description detailing steps taken to completely isolate the abandoned segment from the sanitary sewer system.

1.04 JURISDICTION

A. For pipe crossings under roadways, railroads, or other installations not within the jurisdiction of the Owner, the Contractor shall comply with regulations of said authority. State highway casing installations and crossings shall be as specified in the Florida Department of Transportation, "Utility Accommodation Guide,” and for railroads, the American Railway Engineering Association, Part 5, Section 5.2, "Specifications for Pipelines Conveying Non- Flammable Substances,” shall be applicable.

PART 2 - MATERIALS

2.01 ALL BACKFILL MATERIAL

A. Use clean granular earth material composed of sand, clay and sand, sand and gravel or a combination thereof, obtained from the excavation. The material shall contain no more than 15% by weight passing the No. 200 sieve, 1% by weight organic matter (peat, humus, muck, leaves and carbon compounds), and no cobbles, clayballs, or old pavement larger than 2 inches in their largest dimension. The gradation of this sand or well graded sand and gravel mixture shall be such as to achieve the specified com- paction.

B. In the event there is insufficient satisfactory material from the excavation to meet the requirements for backfill material, obtain borrow which meets the requirements for backfill material from sources secured by the Contractor.

C. All material shall contain less than 1% by weight asbestos.

2.02 BACKFILL MATERIAL

A. Materials for refilling over excavations or subgrade shall meet the requirements for backfill or structural backfill.

B. First Lift: From the excavation grade to a level 12 inches above the top of the pipeline use materials meeting the requirements for backfill and exclude material with fragments larger than the following:

Pipe Type	(Greatest Dimension-Inches)
Ductile iron	2
Plastic	1

C. Second Lift: From the top of the First Lift to the ground surface, exclude material with fragments larger than six inches and use material meeting the requirements for backfill or structural backfill.

2.03 WATER FOR COMPACTION

A. Water used in compaction shall have a pH of 7.0 to 9.0 and be free of acid, alkali, or organic materials injurious to the pipe coatings. Provide all water needed for compaction. Provide temporary piping, valves and trucks to convey water from the source to the point of use. Provide any meters required if the water is taken from a public water system.

2.04 STRUCTURAL BACKFILL

A. Structural backfill shall consist of clean, fine to medium sand, contain less than 1% by weight asbestos or organic matter (peat, humus, leaves, and carbon compounds), and conform to the following gradation requirements:

Sieve Size (Square Openings)	Weight Percent Passing (Square Mesh Sleeves)
No. 4 (4.75 mm)	95 to 100
No. 10 (2.00 mm)	90 to 100
No. 40 (0.420 mm)	70 to 95
No. 60 (0.250 mm)	40 to 80
No. 100 (0.149 mm)	5 to 40
No. 200 (0.074 mm)	less than 5

B. The structural backfill material may consist of either on-site granular material free of any sludge

material, imported fill from sources secured by the Contractor, or a blend of suitable on-site and imported fill material satisfying the requirements for structural backfill.

2.05 ABANDONMENT OF PIPE SEGMENTS

A. Use fittings or end caps constructed of materials chemically and physically compatible with the line being abandoned. Such fittings or caps shall withstand pressure of 150-psi.

2.06 LOCATING WIRE

A. All nonmetallic force mains shall be installed with a continuous, green, insulated, 10 gauge or larger copper wire installed directly on top of the pipe for future location purposes. The wire shall be installed in such a fashion so as to sustain continuity. The contractor must perform a successful continuity test with a Port Orange Public Utilities Department representative present. Location markers, if used, shall be installed at no less than 40-foot interval and at the manufacturer recommended depth.

2.07 PLASTIC LINE MARKER

A. Plastic line mark shall be standard, permanent, bright colored continuous printed plastic tape intended for direct burial service, not less than 6 inches wide by 4 mils thick, green and printed FORCE MAIN. Install tape 12 to 13 inches below finished ground surface, located directly over buried pipelines.

PART 3 - EXECUTION

3.01 GENERAL

A. All excavated material shall be piled in a manner that will not endanger the work and that will avoid obstructing sidewalks and driveways. Gutters shall be kept clear or other satisfactory provisions shall be made for street drainage.

B. All trenches shall be backfilled by hand, from the bottom of the trench to the centerline of the pipe in layers of 6 inches. Backfill material shall be deposited in the trench for the full width on each side of the pipe. Compaction shall be performed by tamping.

C. The pipe shall be backfilled by hand or by approved mechanical methods from the centerline of the pipe to the specified grade. Compaction shall be done in accordance with the requirements of the agency having jurisdiction.

D. All pipe diameter of 12” and less shall have a minimum burial depth of 36” and not to exceed 48” unless approved by Port Orange Public Utilities Department. All pipe with a dimeter of 12” or greater shall have a minimum burial depth of 48” and not to exceed 60” depth unless approved by Port Orange Public Utilities Department.

E. Protection of Water System Crossings

1. Maintain a minimum separation (edge to edge) of 10 feet between parallel water line and sanitary hazards (sanitary sewer and force mains as listed by FDEP), and a minimum vertical separation of 18 inches between intersecting water lines and sanitary hazards. If the 10 feet minimum horizontal clearance cannot be met, the sanitary sewer shall be ductile iron pipe or concrete encasement can be used. If the 18 inches minimum clearance on intersecting water lines cannot be met, a 20-foot length of ductile iron pipe may be centered on the crossing sanitary pipe or concrete encasement can be used. Concrete encasement for PVC shall be a minimum of 6 inches thick on all sides of the pipe for the entire pipe length that is within 10 feet of the sanitary hazard. Concrete encasement shall have a minimum 28-day compressive strength of 2500 psi.

2. Maintain a minimum horizontal separation of 3 feet edge to edge, between parallel water line and (storm sewer, storm water force main or reclaimed water as listed by FDEP), and a

minimum vertical separation of 12 inches. Concrete encasement is required if the minimal horizontal distance and joint spacing cannot be maintained or if the force main is being laid less than three (3) feet horizontally from another pipeline and the minimal vertical distance cannot be maintained.

3.02 TRENCHING

A. General

1. The use of trench-digging machinery will be permitted except in places where its operation will cause damage to other utilities, trees, buildings, or existing structures above or below ground, in which case hand methods will be employed.

2. The Contractor shall consider all available geotechnical information in the design of the trench excavation safety system. If dewatering is required, dewatering operations shall be maintained until pipe-laying is complete and the trench is backfilled sufficiently to prevent movement or flotation of the pipe.

3. Trench excavation shall be in accordance with AWWA C600 and the latest revisions thereto. The trench bottom shall be excavated to the required depth so as to provide a uniform and continuous bearing and support for the pipe on solid and undisturbed ground at every point between the bell holes. Bell holes shall be provided at each joint to permit the jointing to be made properly. Excess excavation shall be avoided whenever possible. Any part of the trench bottom excavated below the specified grade should be corrected with suitable material and thoroughly compacted.

4. Contractor shall excavate sufficiently ahead of pipe laying in order to confirm/identify potential conflicts. Appropriate adjustments to the alignment shall be made. Excavated trench shall not be more than what can be installed and backfilled by end of day.

B. Dewatering

1. Provide and operate equipment adequate to keep trenches free of water. Dewater subgrade to a minimum of 2 feet below the bottom of the excavation. **Dewatering to a depth of less than 2 feet below the bottom of the trench may be allowed if, during construction, Contractor can demonstrate that the compaction of the soils can be obtained**. Remove water during periods when concrete is being deposited, when pipe is being laid, during the placing of backfill, and for proper inspection and/or testing of the exposed subgrade. These provisions shall apply during the noon hour as well as overnight. Do not drain trench water through the pipe under construction. Avoid settlement or damage to adjacent property.

2. When dewatering trenches, dewater from outside the structural limits and from a point below the bottom of the excavation.

3. Obtain and comply with all required discharge permits from appropriate regulatory authorities. Dispose of water in a manner that will not damage adjacent property or interfere with normal drainage.

C. Trench

1. Perform all trench excavation regardless of the type, nature, or condition of the material encountered to accomplish the construction.

2. As the trench excavation progresses, the Owner or his representative will observe the exposed bottom of the trench to determine the need for any additional excavation beyond that specified above. It is intended that additional excavation be conducted in all areas within the influence of the trench where unacceptable subgrade materials exist at the exposed subgrade. Over excavation shall include the removal of all such unacceptable material that exists directly

beneath the trench and to a depth required to reach suitable foundation material. Refill the over excavated areas with structural backfill. All such over excavation and refilling for an unforeseen condition shall be executed in accordance with a change order. Payment for over excavation and refill shall be made in accordance with the General Conditions.

3. No additional payment will be received for over excavation or refill material used for convenience or which is not authorized by the Owner or his representative.

4. Review and be aware of existing conditions and locate all structures and utilities within the project area in order to avoid conflicts.

5. Protect any pipes, cables, mains, footings or other underground structures encountered in trenching/excavating/backfilling from damage or displacement. Replace any pipes, cables, mains, footings or other structures disturbed during construction.

6. Contact all utility companies with underground utilities in the project area and obtain their assistance in locating facilities prior to excavation.

7. Excavate sufficiently in advance of pipe laying to discover obstructions in time to modify alignment, if necessary, to avoid the obstruction. The Owner or his representative must review such alignment modifications.

D. Thrust Restraint and Pipe Encasement

1. Thoroughly brace underground pressure piping systems with restrained joints where indicated in the drawings. Install restrained joints in accordance with manufacturer's recommendations, unless provided in contract documents, whichever is more stringent.

2. Install concrete encasement by placing concrete on both sides, the top, and bottom of pipe with a minimum thickness of 6 inches (unless otherwise shown) in locations shown in the drawings.

E. Trench Widths and Utility Bedding for Pipes 4-inches and Larger

1. Cut trenches to a minimum width equal to the outside diameter of the pipe at the joint plus 8 inches for unsheeted trenches, or 12 inches for sheeted trenches. The maximum width of trench, measured at the top of the pipe, shall not exceed the outside pipe barrel diameter plus 2 feet, unless otherwise shown on the drawings.

2. Maintain vertical trench walls from the bottom of the trench to a line measured 12 inches above the top of the pipe.

3. Bedding: The minimum bedding allowable shall consist of a shaped trench bottom which provides firm bedding for the pipe. Bed the pipe in undisturbed firm soil or hand-shaped unyielding material, so that the pipe will be in continuous contact therewith for its full length and provide a minimum bottom segment support for the pipe equal to 0.6 of the outside diameter of the barrel.

4. Construct special bedding as called for on the drawings or in the Contract Documents.

5. Excavate bell holes at each joint to permit proper assembly and inspection of the entire joint.

F. Trench Grade

1. Excavate and grade the trench to the lines and grades shown on the drawings with allowance for pipe thickness and for pipe base or special bedding. Remove hard spots that would prevent a uniform thickness of bedding. Before laying each section of the pipe, check the grade with a straightedge and correct any irregularities found. The trench bottom shall form a continuous and uniform bearing and support for the pipe at every point between bell holes, except that the

grade may be disturbed for the removal of lifting tackle.

2. If the trench is excavated below the required grade, refill any part of the trench excavated below the grade at no additional cost to the Owner. Place the refilling material over the full width of trench in compacted layers not exceeding six inches deep to the established grade with allowance for the pipe base or special bedding.

G. Length of Open Trench

1. Limit the length of open trench to the amount that can reasonably be expected to be used in a given day. Under no circumstances is a trench to remain open when worksite is unattended.

H. Trench Excavation in Backfill and Fill Areas

1. Construct trench excavation for pipe(s) in backfill or fill areas in accordance with the following procedures:

   a. Construct and compact the backfill or fill to an elevation of one foot minimum over the top of the pipe to be installed.

   b. Excavate trench in the compacted backfill or fill. Place pipe cable base material, install pipe and backfill to 12 inches above the pipe as specified. Compact backfill above this point to the same relative density as the adjacent embankment.

I. Trench Backfilling

1. Place backfill material in maximum 12 inch lifts and compact each lift to the specified relative density.

2. Backfill the trench in accordance with the following procedures:

   a. After pipe has been bedded, place "First Lift" material simultaneously on both sides of the pipe, keeping the level of backfill the same on each side. Carefully place the material around the pipe so that the barrel is completely supported and that no voids or uncompacted areas are left beneath the pipe.

   b. Compact material placed within 12 inches of the outer surface of the pipe by hand tamping only.

   c. Place pipe identification and warning materials as described in Section 02665 Part 2.

   d. Place "Second Lift" material and push the backfill material carefully onto the backfill previously placed in the "First Lift.” Do not permit free fall of the material until at least two feet of cover is provided over the top of the pipe. Do not drop sharp, heavy pieces of material directly onto the pipe or the tamped material around the pipe.

J. Sidewalk, Pavement, and Curb Removal

1. Cut and remove bituminous and concrete pavements, curbs and sidewalks prior to excavation of the trenches. Width of the pavement or brick pavement cut shall be at least one foot wider than the required width of the trench at ground surface. Haul pavement and concrete materials from the site to disposal site secured by Contractor. Do not use for trench backfill.

K. Excavated Material

1. During excavation, place the excavated material only within the project area. Do not obstruct any roadways or streets. Conform to federal, state, and local codes governing the safe loading of trenches with excavated material. Separate suitable and unsuitable material.

2. Remove excess material resulting from the facility installation from the work site and dispose of at locations secured by the Contractor.

L. Drainage, Erosion and Sedimentation

1. Maintain all existing drainage patterns and control run-off from the construction area to prevent erosion, sedimentation, or flooding due to the construction.

M. Sheeting, Shoring, and Bracing of Trenches

1. Install adequate sheeting, shoring and bracing to prevent damage to property and injury to persons. Comply with all applicable safety regulations and laws.

2. Remove sheeting when the trench has been backfilled to at least one-half its depth or when removal will not endanger proper pipe alignment or support.

3. When conditions or plans and specifications require that sheeting be left in place, cut off the top at an elevation 2.5 feet below finished grade, unless otherwise specified.

4. When the performance of the Work requires the use of shoring, sheet piling, bracing and other special construction related to excavation, the Contractor shall cause the design of said shoring, sheet piling and other special construction to be performed by a Florida registered engineer acceptable to Owner. The Contractor shall submit, as a shop drawing, a certification stating that he has complied with this requirement.

N. Compaction

1. Unless otherwise specified or shown on the drawings, compact soil in trenches to the following minimum compaction requirements:

   a. First Lift: 95% relative density.

   b. Second Lift not Under Pavement and Structures: 90% relative density.

   c. Second Lift Under Pavement and Structures: 98% relative density.

   d. Refill for over excavation: 95% relative density.

2. Compact the first 2 feet of backfill over pipe either by hand-operated tamping devices or with powered equipment which will not damage the pipe. Flooding or puddling with water to consolidate backfill is acceptable where sand is encountered and the specified density can be obtained using this method.

3. During the compacting operations, maintain material within +2% of optimum moisture. Aerate material containing excessive moisture by blading, discing, or harrowing to hasten the drying process.

O. Site Grading

1. Shape the surface of trenches to conform to lines, grades and cross sections that existed prior to beginning work or as shown on the drawings, within 1/10 of a foot. Correct deviations.

P. Protection of Property

1. Protect trees and shrubs in accordance with ordinances governing the protection of trees. No excavated materials shall be placed so as to injure such trees or shrubs. Trees or shrubs destroyed by negligence of the Contractor or the Contractor's employees shall be replaced with new stock of similar size and age, at the proper season and at the sole expense of and by the

Contractor.

2. Do not cut branches, limbs and roots unless they are within six inches of the facility under construction. Make all necessary cuts smoothly and neatly without splitting or crushing. Neatly trim and cover the tree with healing paint at all cut or damaged portions.

3. Do not operate on paved surface any equipment with treads or wheels which will cut or otherwise damage paved surfaces. Provide adequate protective measures to avoid damages to the paved surfaces.

4. As promptly as practicable, restore existing property or structures in accordance with Section 02951. Do not leave restoration until the end of the construction period.

Q. Testing

1. Field density tests will be made in locations reviewed by the Owner, normally in each vertical layer, and using the following approximate spacing:

   a. In trenches, one every 300 feet in continuous trenches under pavements or future pavements plus one at each intersection or one every 500 feet in continuous trenches not under pavements, plus one at each pavement or driveway crossing.

   b. In all other areas, one per 7,500 square feet.

2. If any field density tests are below the specified relative density, recompact or re-excavate, rebackfill and recompact the area until the specific density is obtained. Make a minimum of two field density tests per recompacted and/or re- excavated area, but do not exceed the spacing specified above.

3.03 INSTALLATION OF LOCATING WIRE

A. Locating wire shall be buried directly above the centerline of the pipe. Locating wire shall terminate at the top of each valve box and handhole and be capable of extending 12-inches above the top of the box in such a manner so as not to interfere with valve operation. Use duct tape or other means as necessary to hold the wire directly on top of the pipe.

3.04 ABANDONMENT OF PIPE SEGMENTS

A. Cut out a section, at all points of connection, no less than three feet in length to separate the abandoned section from the section to remain in service.

B. Install a compatible fitting or end cap on each end of the abandoned segment.

C. Grout may be substituted for a fitting or end cap only where specifically approved by the Owner.

END OF SECTION

SECTION 02667

CONNECTIONS TO EXISTING BURIED PIPELINES

PART 1 - GENERAL

1.01 DESCRIPTION

A. This section includes materials and installation of hot-tap connections to existing buried ductile-iron and cast-iron pipelines.

1.02 SUBMITTALS

A. Submit shop drawings in accordance with the General Conditions.

B. Submit manufacturer's catalog data for tapping sleeves. Show coatings.

C. Submit shop drawing for design and fabrication of steel outlet connections to existing steel pipes.

PART 2 - MATERIALS

2.01 TAPPING SLEEVES FOR DUCTILE-IRON PIPES

A. Tapping Sleeve for Ductile-Iron and PVC (Cast-Iron O.D.) Pipes: Mueller H-615 or equal.

B. Pressure rating shall be at least 200 psi for piping 12 inches and smaller and at least 150 psi for piping 14 through 24 inches.

2.02 COATING FOR TAPPING SLEEVES

A. Coat with fusion bonded epoxy per Section 09811.

2.03 TAPPING GATE VALVES

A. Per Section 15100.

2.04 SERVICE SADDLES:

A. Service saddles shall be constructed of malleable iron or ductile iron body with two carbon steel, electro-galvanized with dichromate seal, or stainless-steel straps. Strap nuts and washers shall be electro-galvanized with dichromate seal or stainless steel. Gaskets shall be neoprene or equal and shall be cemented in place. Sizes are as follows:

Nominal	Threads	To Fit O.D.
4" x 2"	FIPT	4.80"
6" x 2"	FIPT	6.90"
8" x 2"	FIPT	9.05"

2.05 CORPORATION STOPS

A. All corporation and curb stops shall have brass bodies conforming to ANSI/AWWA C800- 14 (ASTM B62 - Index 115 85-5-5-5) and the latest revisions thereto. Corporation stops are to be MIPT x MIPT.

B. Acceptable manufacturers are AY McDonald, Ford Meter Box, James Jones, and Mueller.

PART 3 - EXECUTION

3.01 VERIFICATION OF PIPE O.D. PRIOR TO INSTALLATION

A. Excavate the points of connection prior to submittal of shop drawings. Verify O.D. prior to ordering materials.

END OF SECTION

SECTION 02684

PRESSURE TESTING OF PIPING

PART 1 - GENERAL

1.01 DESCRIPTION

A. This section specifies the hydrostatic and leakage testing of force mains.

1.02 SUBMITTALS

A. Submit test bulkhead locations and design calculations, pipe attachment details, and methods to prevent excessive pipe wall stresses.

B. Submit six copies of the test records to the OWNER'S REPRESENTATIVE upon completion of the testing.

1.03 TEST PRESSURES

A. Test pressure for the various services and types of piping shall be 150 psi for a minimum of 2 hours, unless other values are shown.

1.04 TESTING RECORDS

A. Provide records of each piping installation during the testing. These records shall include:

1. Date of test.
2. Identification of pipeline, or pipeline section, tested or retested.
3. Identification of pipeline material.
4. Identification of pipe specification.
5. Test fluid.
6. Test pressure.
7. Remarks: Leaks identified (type and location), types of repairs, or corrections made.
8. Certification by Contractor that the leakage rate measured conformed to the specifications.

PART 2 - MATERIALS

2.01 MANUAL AIR-RELEASE VALVES FOR BURIED PIPING

A. Provide temporary manual air-release valves for pipeline test. Construct the pipe outlet in the same manner as for a permanent air valve and after use, seal with a blind flange, pipe cap, or plug and coat the same as the adjacent pipe.

2.02 TEST BULKHEADS

A. Design and fabricate test bulkheads per Section VIII of the ASME Boiler and Pressure Vessel Code. Materials shall comply with Part UCS of said code. Design pressure shall be at least 2.0 times the specified test pressure for the section of pipe containing the bulkhead. Limit stresses to 70% of yield strength of the bulkhead material at the bulkhead design pressure. Include air-release and water drainage connections.

2.03 TESTING FLUID

A. Obtain and use only potable water for hydrostatic testing.

B. Submit request for use of water from waterlines of Owner 48 hours in advance.

C. The Contractor may obtain the water from the Owner at the Owner's rate of charges.

2.04 TESTING EQUIPMENT

A. Provide pressure gauges, pipes, bulkheads, pumps, and meters to perform the hydrostatic testing.

PART 3 - EXECUTION

3.01 TESTING PREPARATION

A. Pipes shall be in place and anchored before commencing pressure testing.

B. Conduct pressure tests on exposed and aboveground piping after the piping has been installed and attached to the pipe supports, hangers, anchors, expansion joints, valves, and meters.

C. For buried piping, the pipe may be partially backfilled and the joints left exposed for inspection for an initial leakage test. Perform the final test, however, after completely backfilling and compacting the trench.

D. Provide any temporary piping needed to carry the test fluid to the piping that is to be tested. After the test has been completed and demonstrated to comply with the specifications, disconnect and remove temporary piping. Do not remove exposed vent and drain valves at the high and low points in the tested piping; remove any temporary buried valves and cap the associated outlets. Plug taps or connections to the existing piping from which the test fluid was obtained.

E. Provide temporary drain lines needed to carry testing fluid away from the pipe being tested. Remove such temporary drain lines after completing the pressure testing. Drain the pipes after they have been tested.

F. Unless stated otherwise in this section, testing shall be carried out in accordance with Section 5 of AWWA Standard C600-17.

3.02 TESTING SEQUENCE

A. Locate and install test bulkheads, valves, connections to existing pipelines, and other appurtenances in a manner to provide an air gap separation between existing pipelines and the pipeline being tested.

3.03 LENGTH OF TEST SECTION FOR BURIED PIPING

A. The maximum length of test section for buried pipe is one half (1/2) mile. Provide test bulkheads where the distance between inline valves exceeds these limits.

3.04 HYDROSTATIC TESTING OF BURIED PIPING

A. Where any section of the piping contains concrete thrust blocks or encasement, do not make the pressure test until at least 10 days after the concrete has been poured. When testing mortar-lined or PVC piping, fill the pipe to be tested with water and allow it to soak for at least 48 hours to absorb water before conducting the pressure test.

B. Apply and maintain the test pressure by means of a hydraulic force pump.

C. Maintain the test pressure for 2 hours (minimum) by restoring it whenever it falls an amount of 5 psi.

D. After the test pressure is reached, use a meter to measure the additional water added to maintain the pressure. This amount of water is the loss due to leakage in the piping system. No pipe installation shall be accepted until the leakage is less than the leakages defined by the formula listed below.

$$\frac{L = SD(P)1/2}{148,000}$$

in which:

L = allowable leakage (gallons/hour) during the test period

S = length of pipe, in feet

D = diameter of the pipe (inches)

P = specified test pressure (psig)

E. If the defective portion of the pipe or fittings cannot be located, the Contractor shall remove and reconstruct as much of the work as is necessary until the leakage is within the allowable limits.

F. The allowable leakage for buried piping having threaded, brazed, or welded (including solvent or fusion welded) joints shall be zero.

3.05 REPETITION OF TEST

A. If the actual leakage exceeds the allowable, locate and correct the faulty work and repeat the test. Restore the work and all damage resulting from the leak and its repair. Eliminate visible leakage.

3.06 BULKHEAD AND TEST FACILITY REMOVAL

A. After a satisfactory test, remove test bulkheads and other test facilities, and restore the pipe coatings.

END OF SECTION

PAGE INTENTIONALLY LEFT BLANK

SECTION 02951

RESTORATION

PART 1 - GENERAL

1.01 DESCRIPTION

A. This section includes providing materials, labor and equipment to restore the areas disturbed by CONTRACTOR's operations during the installation of pipes, valves, fixtures and meter connections or other construction. The construction areas shall be restored to a condition equal to, or better than, that, which existed prior to the construction unless otherwise directed by OWNER or ENGINEER.

1.02 STANDARDS

A. Determine the density of soil in place by the sand cone method, ASTM D1556; by nuclear methods, ASTM D6938; or by the rubber balloon method, ASTM D2167.

B. Determine laboratory moisture-density relations of soils by ASTM D1557 (modified Proctor).

C. Sample backfill materials by ASTM D75.

D. "Relative density" is the ratio, expressed as a percentage, of the in place dry density to the laboratory maximum dry density as determined by ASTM D1557 (modified Proctor).

E. Testing: An independent testing laboratory will make density tests for determination of specific compaction and concrete cylinder tests.

F. Pavement markings and traffic stripes shall conform to FDOT Roadway and Traffic Design Standards.

1.03 SUBMITTALS

A. Submit certification to the OWNER, from the supplier, manufacturer or testing laboratory (acceptable to the OWNER) showing that the materials, gradations and testing conform with the requirements of these specifications.

PART 2 - MATERIALS

2.01 CONCRETE DRIVEWAYS, SIDEWALKS, CURBS AND GUTTERS

A. Concrete, reinforcement and forming shall comply with the requirements of Section 03103.

2.02 LANDSCAPING AND SODDING

A. Landscaping

1. Plant Materials

a. Use healthy and vigorous plants that are Florida No. 1 Grade or better (as defined in Florida Department of Agriculture and Consumer Services, Grades, and Standards for Nursery Plants, Parts 1 and 2), free of mechanical injury, injury as a result of frost, insects, and insect eggs and without disfiguration and other objectionable defects. Select plant materials for shape, branching habits and natural characteristics which at maturity will produce a strong, full foliaged specimen. Firmly wrap balled and burlapped plants (designated B & B) with burlap. A ball broken before or during planting will not be accepted.

2. Fertilizer

a. Commercial grade, controlled release, granular fertilizer consisting of a blend of coated

prilled urea with iron included in a slowly soluble form, free flowing and uniform in composition conforming to Florida DOT Spec 982-1, and bearing the manufacturer's guaranteed statement of analysis by weight of 12 parts nitrogen, 12 parts phosphoric acid and 12 parts potash, plus complete micronutrients.

3. Peat

   a. Raw peat or Canadian, friable, clean, pulverized, free of foreign substance, and in air-dry condition.

4. Gravel

   a. Gravel shall consist of clean washed river rock, 3/4 inch to 1-3/4 inch in diameter and free of any foreign debris.

5. Mulch

   a. Mulch shall be Cypress Grade "B" or better, clean and free from weeds and other debris.

6. Water for Landscaping

   a. Water shall be free of acid, alkali, or organic materials and shall have a pH of

   b. 7.0 to 8.5. Provide all water needed for landscaping. Provide permanent or temporary piping and valves, and temporary trucks to convey water from the source to the point of use. Provide any meters required and pay for water used. Water shall be free of petroleum products, pesticides and other deleterious constituents.

B. Sodding

1. Sod

   a. Sod shall be supplied that is consistent with the type that is being restored. If grass is not existing, provide Argentine Bahia. The sod shall be taken up in commercial-size rectangles, preferably 12-inch by 24-inch or larger, except where 6-inch strip sodding is called for.

   b. The sod shall have no visible broadleaf weeds when viewed from a standing position and the turf shall be visibly consistent with no obvious patches of foreign grasses. In no case may the total amount of foreign grasses or weeds exceed 2% of the total canopy. Florida Standard Grade sod shall be neatly mowed and mature enough that when grasped at one end it can be picked up and handled without damage. The sod shall be sufficiently thick to secure a dense stand of live grass. The sod shall be live, fresh and uninjured, at the time of planting. It shall have a soil mat of sufficient thickness adhering firmly to the roots to withstand all necessary handling.

2. Fertilizer

   a. Commercial grade, controlled release, granular fertilizer consisting of blend of coated prilled urea with iron included in a slowly soluble from, free flowing and uniform in composition conforming to Florida DOT Specification 982-1, and bearing the manufacturer's guaranteed statement of analysis by weight of 12 parts nitrogen, 8 parts phosphoric acid and 8 parts potash, plus complete micronutrient including magnesium, sulfur, zinc, manganese, copper and boron.

3. Mulch

   a. The mulch material used shall normally be dry mulch. Dry mulch shall be straw or hay, consisting of oat, rye, or wheat straw, or of pangola, peanut, coastal Bermuda or Bahia

grass hay. Only undeteriorated mulch which can readily be cut into the soil shall be used. Mulch shall be free of weeds, weed seed and other deleterious material.

4. Source Requirements for Sod and Mulch

   a. Comply with all current restrictions for transporting sod and mulch material from or through quarantine areas for the white fringed beetle, witchweed, and West Indian sugar cane borer weevil, as issued by the Division of Plant Industry, Florida Department of Agriculture and the Animal and Plant Health Inspection Service, U.S. Department of Agriculture.

5. Water for Grassing

   a. Water shall be free of acid, alkali, or organic materials and shall have a pH of7.0 to 8.5. Provide all water needed for grassing. Provide permanent or temporary piping and valves, and temporary trucks to convey water from the source to the point of use. Provide any meters required and pay for water used if the water is taken from a public water system. Water shall be free of petroleum products, pesticides and any other deleterious constituents.

2.03 FENCING

A. Restoration of fencing removed or damaged during construction shall be accomplished using materials of equal or better quality and kind as those being restored. Re-installation of pre- existing fencing shall be accomplished if the materials are not damaged.

2.04 IRRIGATION SYSTEMS

A. Restoration of irrigation system components disturbed, removed or damaged during construction shall be accomplished using materials of equal or better quality and kind. Pipes, valves, fixtures and other equipment shall be returned to their existing positions where practical. If relocation of irrigation equipment is necessary, consult OWNER before proceeding.

PART 3 - EXECUTION

3.01 GENERAL

A. Construction and restoration activities are to be accomplished within seven days in such a manner as to minimize disruption and inconvenience to customers of the OWNER. Promptly and courteously respond to any inquiries from customers regarding restoration. Restoration shall, to the extent possible, result in the customer s property returning to pre-existing appearance and function.

3.02 CONCRETE

A. Removal

   1. Remove driveways, sidewalks and curbs to the nearest expansion joint.

B. Foundation

   1. Excavate or backfill to the required depth. Compact the foundation material upon which the sidewalk or driveway is to be set to at least 98 percent relative density to a depth of 12 inches, with an even surface, true to line, grade and cross section, and soaking wet at the time that the concrete is placed.

C. Installation

   1. Concrete, reinforcement and forming shall comply with the requirements of Section 03103.

D. Backfilling and Compacting

1. After the concrete has set sufficiently, refill the spaces adjacent to the concrete to the required elevation with suitable material. Place and thoroughly compact as specified in Section 02665.

E. Testing

1. Sample and cure the concrete in accordance with ASTM C31, except take not less than three 6-inch by 12-inch cylinders for each 75 cubic yards poured or each day's pour if less than 75 cubic yards. A slump test may be taken in conformity with ASTM C143, and the cylinders shall be tested in accordance with ASTM C39.

2. Finished sidewalk shall be within 0.02 feet of elevations shown on plans, and no cracks other than at contraction joints.

3. Remove and replace all sidewalk that does not meet above requirements.

3.03 GRASS

A. Construction Methods - General

1. Provide and establish grass in all areas that are disturbed during construction (except areas to be paved, landscaped or covered with structures).

2. Provide sod 6 feet in all directions along utility trench and around valve bores and where indicated on plans.

3. When a length of disturbed areas have been graded and made ready, commence sod installation in accordance with these specifications. Incorporate sod into the project at the earliest practical time in the life of the contract to reduce potential erosion.

4. Sprinkle sod with water and protect from exposure to wind and direct sunlight until planted. Provide covering that will allow are to circulate so that heating will not develop.

B. Sodding

1. Incorporate sodding into the project at the earliest practical time in the life of the contract. Do not use sod which has been cut for more than three days. Stack any sod which is not planted within 24 hours after cutting and maintain properly moistened.

2. Place the sod on a prepared surface, with abutting joints. Fill any gaps or cracks between sod blocks with sod. Roll with a minimum one-ton roller to obtain an even surface. Bring the sod edge in a neat, clean manner to the edge of all paving and shrub areas and project limits.

3. Where sodding is used in drainage ditches, stagger the setting of the pieces to avoid a continuous seam along the line of flow.

4. On areas where the sod may slide due to height and slope, peg the sod with pegs driven through the sod blocks into firm earth at suitable intervals. Replace any pieces of sod which, after placing, show an appearance of extreme dryness.

C. Mowing

1. Mow first when the grass reaches a height of 3 to 4 inches. Mow a second time when the grass reaches a height of 6 inches and before a seedhead occurs. Subsequent mowings should establish a uniform grass surface of 2-1/2 inches and be made before seedhead occurs. All mowings should be made with a cut height as low as possible to stop shading of the Bahia grass.

2. Mow sod to establish a uniform grass surface of 2-1/2 inches.

3. Provide equipment for mowing that does not rut the soil surface. Fill any ruts that are in excess of two (2) inches deep with native soil free from twigs and rocks larger than 1 inch in diameter. Temporarily suspend mowing operations when the soil is too wet to provide adequate support and traction for equipment.

D. Watering

1. Maintain a balanced watering program until the acceptance of work.

2. Apply water in sufficient quantities and as often as seasonal conditions require to keep the grassed areas moist.

E. Guarantee

1. Guarantee all grassed areas to be alive and in satisfactory growth at the end of the maintenance period (90 days).

2. Replace any grass that is dead or not in satisfactory growth, as determined by the OWNER or OWNER's representative. Guarantee new grassing for an additional 90 days.

3. The term "Satisfactory Growth" as used in this section is defined as even plant growth in healthy conditions without bare spots larger than one square foot in seeded areas and without bare spots in sodded areas. Bare spots larger than one square foot shall be regrassed. All sodded areas shall be maintained until satisfactory growth has been demonstrated. In the event that the subsequent stand of grass is found to be contaminated with weeds or other obnoxious or undesirable growth, effectively eliminate such undesirable growth, at the CONTRACTOR's expense.

4. Replace grass with the same variety as initially specified.

END OF SECTION

PAGE INTENTIONALLY LEFT BLANK

SECTION 03103

FORMWORK, REINFORCING AND CONCRETE

PART 1 - GENERAL

1.01 DESCRIPTION

A. This section includes materials, testing and construction of the reinforced concrete elements described on the drawings.

PART 2 - PRODUCTS

2.01 CONCRETE

A. All concrete will be made from Type I cement and size #67 aggregate with a minimum 28- day compressive strength of 3,000 psi, slump 4 inches, + 1 inch, and with an ASTM C494, a water reducing admixture.

2.02 REINFORCEMENT

A. Use deformed bars conforming to ASTM A615, Grade 60 and free from loose rust and scale. No welding is permitted.

2.03 FORMING

A. Use forms of either wood or metal with a depth equal to the plan dimensions for the depth of concrete being deposited against them.

2.04 PREFORMED EXPANSION JOINT FILLER

A. Unless otherwise specified, use bituminous type preformed expansion joint filler conforming to the requirements of ASTM Designation D994.

2.05 CURING COMPOUND

A. ASTM C309, Type I, clear with fugitive dye or Type II, white pigmented. Use compounds that contain no ingredient which will adversely affect the bond of coatings or toppings.

2.06 ADMIXTURES

A. Air entraining admixtures as specified in ASTM C260.

PART 3 - EXECUTION

3.01 FOUNDATION

A. Excavate or backfill to the required depth. Compact the foundation material upon which the concrete is to be set to a minimum of 95 percent of the maximum density as determined by AASHTO T-180, with an even surface, true to line, grade and cross section, and soaking wet at the time that the concrete is placed.

3.02 FORMS

A. Set the forms straight, free from warp or bends, and true to line and grade. Make the forms of sufficient strength when braced or tied to resist the pressure of the concrete without deviation from line and grade. Clean the forms each time they are used, and oil or saturate with water prior to placing the concrete.

3.03 REINFORCING

A. Set bars in form and support so concrete will flow under them.

3.04 PLACING

A. Place concrete in the forms to the required depth. Tamp and spade until mortar entirely covers its surface.

3.05 JOINTS

A. Form expansion joints as shown on the drawings.

3.06 FINISHING

A. Strike off the concrete by means of a wood or metal screed used perpendicular to the forms in order to obtain the required grade, and remove surplus water and laitance.

B. Finish the concrete surface as shown on the drawings. The surface variations shall not be more than 1/4 inch under a 10-foot straight edge, nor more than 1/8 inch on a 5- foot transverse section.

3.07 CURING

A. Continuously cure the concrete for a period of at least seven days. Commence curing after finishing has been completed and as soon as the concrete has hardened sufficiently to permit application of the curing material without marring the surface. Replace immediately any curing material removed or damaged during the curing period. Cure the concrete by wetting the wooden forms, covering the surface with set burlap, keeping the surface wet with water or using curing compound.

B. It is the responsibility of the CONTRACTOR to select the appropriate curing method in response to climatic and/or site conditions occurring at the time of concrete placement. Implement the measures described in ACI 305 and 306 for protecting and curing concrete during hot and cold weather or use whatever other methods may be necessary.

3.08 JOINTS AND CRACKING

A. Saw joints before the formation of uncontrolled cracking (i.e., cracking that occurs at locations other than construction, control or contraction joints) and as soon as the concrete has hardened sufficiently to permit cutting without chipping, spalling or tearing. Saw joints both during the day and night as required.

B. Cracking: If the concrete cracks at locations other than at construction, control or contraction joints, if the defects are serious or affect the strength of the structure, or if patching does not satisfactorily restore the quality and appearance to the surface, the CONTRACTOR may be required to remove and replace the concrete in accordance with the provisions of this section, all at no additional cost to the OWNER.

3.09 BACKFILLING AND COMPACTING

A. After the concrete has sufficiently set, refill the spaces adjacent to the concrete to the required elevation with suitable material. Perform earthwork in accordance with Section 02665.

3.10 TESTING

A. Sample and cure the concrete in accordance with ASTM C31, except take not less than three 6-inch by 12-inch cylinders for each cubic yard poured or each day's pour if less than 75 cubic yards. A slump test may be taken in conformity with ASTM C143, and the cylinders shall be tested in accordance with ASTM C39.

END OF SECTION

SECTION 03600

GROUTING

PART 1 - GENERAL

1.01 DESCRIPTION

A. Scope of Work: The scope of work involves the grouting of the space left void in the abandonment of the existing pipelines and structures. The work consists of furnishing all labor, equipment and materials and performing all work connected with the placement of the cementitious grout to fill the void.

1.02 QUALITY ASSURANCE

A. Grouting shall be performed by a crew under the direct supervision of a superintendent that has experience in grouting of this nature.

B. Storage, mixing, handling and placement shall be in accordance with manufacturer's instructions and specifications.

1.03 SUBMITTALS

A. Shop Drawings: Shop drawings shall be submitted in accordance with Division 1. In addition, the following shall be submitted to the Engineer for acceptance prior to construction.

1. A detailed description of equipment and operational procedures to accomplish the grouting operation, including grout mixture design, grout mixer type, grout samples, and test data.

2. A detailed description of the grouting time schedule.

PART 2 - PRODUCTS

2.01 GROUT MATERIAL

A. The grout shall be a "flowable fill" consisting of a mixture of Type 1 Portland Cement, Type "F" Flyash (ASTM 618), sand and water.

B. The mixture shall contain a minimum of 50 pounds cement and minimum of 400 pounds flyash per cubic yard of grout.

2.02 EQUIPMENT

A. All grout shall be mixed with a high shear, high energy colloidal type mixer to achieve the best uniform density.

B. The grout shall be pumped with a non-pulsating centrifugal or tri-plex pump.

C. The mixer shall be capable of continuous mixing. Batch mixing shall not be permitted.

PART 3 - EXECUTION

3.01 GROUTING

A. Grouting of the annular space due to the abandonment of the existing pipe will be allowed in continuous individually bulkheaded segments of up to 300 linear feet.

B. Grout shall be placed in a maximum of three stages, with the initial stage volume equal to or greater than 50% of the total volume for that section of pipe being grouted. The maximum time wait between grouting stages shall be 24 hours.

C. For each stage, mix and pump the material in one continuous process so as to avoid partial setting

of some grout material during that stage, thus, eliminating voids and possible subsequent surface damage due to "cave-ins".

D. Each section shall be grouted by injecting grout from the lowest point and allowing it to flow toward the highest point to displace water from the annulus and assure complete void-free coverage. Grout shall be placed through tubes installed in the bulkheads at the insertion pits or manholes. Grout tubes shall be at least 2-inch nominal diameter.

E. After the ends of each section of pipe are exposed, the entire space, not to exceed 300 linear feet end to end, shall be sealed by controlled pumping of grout until it flows from the pipe at the opposite end of the grouting. **Grouting shall be carried out until the entire space is filled**.

F. Grout pressure in the void space is not to exceed five (5) psi above maximum hydrostatic groundwater level. An open ended, highpoint tap or equivalent vent must be provided and monitored at the bulkhead opposite to the bulkhead through which grout is injected. This bulkhead will be blocked closed as grout escapes to allow the pressuring of the annular space.

3.02 FIELD QUALITY CONTROL

A. The quality of the grout, application of the equipment and installation techniques are the responsibility of the Contractor. The review and acceptance or approval of specific mix design, equipment or installation procedures shall in no way relieve the Contractor of his obligation to provide the final product as specified herein.

END OF SECTION

SECTION 09811

FUSION-BONDED EPOXY LININGS AND COATINGS

PART 1 - GENERAL

1.01 DESCRIPTION

A. This section includes materials, application, and testing of one part, fusion bonded, heat cured, thermosetting, 100% solids epoxy linings and coatings.

1.02 SUBMITTALS

A. Submit shop drawings in accordance with the General Conditions.

B. Submit manufacturer's catalog literature and product data sheets, describing the physical and chemical properties of the epoxy coating. Describe application and curing procedure.

C. Submit coating application test records for measuring coating thickness and holiday detection for each item or pipe section and fitting. Describe repair procedures used.

D. Submit information showing linings in contact with potable water meet the requirements of NSF Standard 61.

PART 2 - MATERIALS

2.01 PIPING AND EQUIPMENT SURFACES

A. The CONTRACTOR shall require the equipment suppliers to provide equipment that is free of salts, oil, and grease to the coating applicator.

B. The CONTRACTOR shall require pipe suppliers to provide bare pipe that is free of salts, oil, and grease to the coating applicator.

2.02 SHOP-APPLIED EPOXY LINING AND COATING

A. Lining and coating shall be a 100% solids, thermosetting, fusion-bonded, dry powder epoxy resin: Scotchkote 134, or 206N; Valspar "Pipe Clad" or equal. Coating in contact with potable water must meet the requirements of NSF Standard 61. Epoxy lining and coating shall meet or exceed the following requirements:

Hardness (minimum)	Barcol 17 (ASTM D 2583) Rockwell 50 ("M" scale)
Abrasion resistance (minimum value)	1,000 cycles: 0.05 gram removed 5,000 cycles: 0.115 gram removed
	ASTM D 1044, Taber CS 17 wheel, 1,000-gram weight
Adhesion (minimum)	3,000 psi (Elcometer)
Tensile strength	7,300 psi (ASTM D 2370)
Penetration	0 mil (ASTM G 17)
Adhesion overlap shear, 1/8-inch steel panel, 0.010 glue line	4,300 psi, ASTM D 1002
Impact (minimum value)	100 inch-pounds (Gardner 5/8-inch diameter tup)

2.03 FIELD-APPLIED EPOXY COATING FOR PATCHING

A. Use a two-component, 80% solids liquid resin, such as Scotchkote 306.

PART 3 - EXECUTION

3.01 SHOP APPLICATION OF FUSION-BONDED EPOXY LINING AND COATING--GENERAL

A. Grind surface irregularities, welds, and weld spatter smooth before applying the epoxy. The allowable grind area shall not exceed 0.5 square foot per location, and the maximum total grind area shall not exceed 2 square feet per item or piece of equipment. Do not use any item, pipe, or piece of equipment in which these requirements cannot be met.

B. Remove surface imperfections, such as slivers, scales, burrs, weld spatter, and gouges. Grind outside sharp corners, such as the outside edges of flanges, to a minimum radius of 1/4 inch.

C. Uniformly preheat the pipe, item, or piece of equipment prior to blast cleaning to remove moisture from the surface. The preheat shall be sufficient to ensure that the surface temperature is at least 5□F above the dew point temperature during blast cleaning and inspection.

D. Sandblast surfaces per SSPC SP-5. Protect beveled pipe ends from the abrasive blast cleaning.

E. Apply a phosphoric acid wash to the pipe, item, or piece of equipment after sandblasting. The average temperature, measured in three different locations, shall be 80□F to 130□F during the acid wash procedure. The acid wash shall be a 5% by weight phosphoric acid solution. The duration in which the acid is in contact with the surface shall be determined by using the average temperature as tabulated below:

Pipe Temperature (^{o}F)	Contact Time (seconds)
80	52
85	45
90	36
95	33
100	28
105	24
110	21
130	10

F. After the acid wash has been completed, remove the acid with demineralized water having a maximum conductivity of 5 micromhos/cm at a minimum nozzle pressure of 2,500 psi.

G. Apply lining and coating by the electrostatic spray or fluidized bed process. Minimum thickness of lining or coating shall be 12 mils. Heat and cure per the epoxy manufacturer's recommendations. The heat source shall not leave a residue or contaminant on the metal surface. Do not allow oxidation of surfaces to occur prior to coating. Do not permit surfaces to flash rust before coating.

3.02 SHOP APPLICATION OF FUSION-BONDED EPOXY LINING AND COATING TO PIPE--ADDITIONAL REQUIREMENTS

A. Apply lining and coating per AWWA C213 except as modified herein.

B. Grind 0.020 inch (minimum) off the weld caps on the pipe weld seams before beginning the surface preparation and heating of the pipe.

3.03 QUALITY OF LINING AND COATING APPLICATIONS

A. The cured lining or coating shall be smooth and glossy, with no graininess or roughness. The lining

or coating shall have no blisters, cracks, bubbles, underfilm voids, mechanical damage, discontinuities, or holidays.

3.04 FACTORY TESTING OF COATING--GENERAL

A. Test linings and coatings with a low-voltage wet sponge holiday detector. Test pipe linings and coatings per AWWA C213, Section 5.5.2. If the number of holidays or pinholes is fewer than one per 20 square feet of coating surface, repair the holidays and pinholes by applying the coating manufacturer's recommended patching compound to each holiday or pinhole and retest. If the number of pinholes and holidays exceeds one per 20 square feet of coating surface, remove the entire lining or coating and recoat the item or pipe.

B. Measure the coating thickness at three locations on each item or piece of equipment or pipe section using a coating thickness gauge calibrated at least once per eight-hour shift. Record each measured thickness value. Where individual measured thickness values are less than the specified minimum thickness, measure the coating thickness at three additional points around the defective area. The average of these measurements shall exceed the specified minimum thickness value, and no individual thickness value shall be more than 2 mils below or 3 mils above the specified minimum value. If a section of the pipe, item, or piece of equipment does not meet these criteria, remove the entire lining or coating and recoat the entire item or piece of equipment.

3.05 FIELD REPAIRS

A. Patch scratches and damaged areas incurred while installing fusion bonded epoxy coated items with a two-component, 80% solids (minimum), liquid epoxy resin. Wire brush or sandblast the damaged areas per SSPC SP-10. Lightly abrade or sandblast the coating or lining on the sides of the damaged area before applying the liquid epoxy coating. Apply a two-part epoxy coating to defective linings and coatings to areas smaller than 20 square inches. Patched areas shall overlap the parent or base coating a minimum of 0.5 inch. If a defective area exceeds 20 square inches, remove the entire lining and coating and recoat the entire item or piece of equipment. Apply the liquid epoxy coating to a minimum dry- film thickness of 12 mils.

END OF SECTION

PAGE INTENTIONALLY LEFT BLANK

SECTION 13300

PROCESS INSTRUMENTATION AND CONTROL SYSTEM

GENERAL REQUIREMENTS

PART 1 GENERAL

1.01 SCOPE OF WORK

A. The overall system general requirements are given in this section. These requirements apply to each additional section of these specifications as noted herein and as specified in the associated sections.

B. Work includes engineering, furnishing, installing, testing, documenting and placing in operation the complete Process Instrumentation and Control System (PICS) for Lowe's Lift Station at City of Port Orange, Florida. Training of the Owner's personnel is also included. The work is specified in this Section and as further specified in the following sections:

1. Specification Section 13000: General
2. Specification Section 13310: Field Instruments
3. Specification Section 13315: Lift Station Control Panel
4. Specification Section 13330: RTU

C. Two entities are defined in this specification.

1. SYSTEM SUPPLIER:
   a. Champion Controls, Inc.
   b. Control Instruments, Inc. (C2i).
   c. Telemetry and Process Controls Inc.

2. The CONTROL SYSTEM ENGINEER (CSE):
   a. Smart Energy Solutions LLC, Contact Mr. Shady Al-Zubi, P.E., at 248-252-2408.
   b. Approved Equal.

D. The SYSTEM SUPPLIER scope of work shall include the following:

1. Provide Lift Station Control Panel (LSCP) to include RTU, OIT, Cellular Router, UPS, Solar controller, Starters and electrical components as shown on the drawings and defined in the specifications.

2. Provide termination cabinet (TC1 & TC2) for pump power and control wiring terminations.

3. Provide RTU (PLC, OIT), Telemetry and SCADA programming for a

complete functional system.

4. Provide Field Instruments, Rain Gauge, Alarm and Area lights, Solar Photovoltaic panel as shown on the drawings and detailed in the specifications.

E. The CONTROL SYSTEM ENGINEER (CSE) shall work with the SYSTEM SUPPLIER through all phases of the design development, PLC and SCADA programming, network configuration, construction, Installation, testing, and certification. The following outlines the CSE scope of work:

1. The CSE shall work with the SYSTEM SUPPLIER during shop drawing development to ensure that the components of the PICS submitted for use are coordinated, compatible and that all requirements of the project are being implemented.

2. The CSE is responsible for review and approval of PLC, OIT and HMI development prior to submittal to the EOR for review.

3. The CSE is responsible for review and approval of the PICS Hardware and Software Startup training materials prior to submittal to the EOR for review.

4. The CSE is responsible for review and approval of the Network and communication protocol coordination prior to submittal to the EOR for review.

5. The CSE is responsible for observing the factory testing of the PICs.

6. The CSE is responsible for observing the field testing and commissioning of the PICS performed by the SYSTEM SUPPLIER.

7. The CSE shall have the following qualifications:

   a. Licensed PE in the state of Florida for “Control Systems”.

   b. Florida based office located within 100 miles of the project site.

   c. 10 years controls engineering experience with minimum 5 years in the Water and Wastewater industry.

8. At the conclusion of the project the CSE shall certify to the Engineer of Record (EOR) that the PICS has been implemented in accordance with project specifications requirements. This includes the PLC, Motor Controls and Network Hardware and Software systems. As applicable to this project. SYSTEM SUPPLIER shall furnish all labor, materials, equipment, programming, services and incidentals required to install and place into operation a digital computer-based PICS configured as shown on the Contract Drawings, and as specified herein.

F. The CONTRACTOR shall furnish all labor, materials, equipment, programming, services and incidentals required to install and place into operation a digital computer-based PICS configured as shown on the Contract Drawings, and as specified herein.

G. The CONTRACTOR shall provide all equipment, materials, programming, software, modifications to existing equipment, calibrations and services that are required to successfully interface and interconnect the PICS and any other control systems and associated equipment that are specified or designated in any drawings or provisions of these specifications for the purpose of providing a fully integrated and functional control system.

H. It is the intent of these Contract Documents that the CONTRACTOR shall have overall responsibility for the PICS.

I. Division of Work. It is the ultimate responsibility of the CONTRACTOR to furnish a complete and fully operable PICS that reliably performs the specified functions. The CONTRACTOR is to assume full responsibility for additional costs which may result from unauthorized deviations from the specifications. The CONTRACTOR is to establish the actual division of work with the minimum requirements as specified herein.

J. The CONTRACTOR shall be responsible for:

1. All hardware and software submittals.

2. The final system operation and reliability.

3. Obtaining the required information on all field elements, equipment starters, valve actuators, chemical feed equipment, local control panels, and other control equipment or devices that are required to be interfaced with, but that are not provided with the PICS in order to provide full system coordination regarding interface, function, testing, and adjustment requirements.

4. Providing accessory devices including furnishing and installation of networking interface cards, interposing relays, control switches and signal converters necessary to perform the intent as described by the control strategies and services necessary to achieve a fully integrated and operational system as shown on the Contract Drawings and defined in the Specifications.

5. Coordinating all interface requirements with mechanical and electrical system suppliers and furnishing any signal isolation devices that might be required in order to insure compatibility between all equipment.

6. Providing any special manufacturer's cables required.

7. Defining the final installation and connection requirements of the PICS at the jobsite through development of interconnection diagrams.

8. Final connection of fiber patch cables between Fiber Patch Panels furnished by others and PICS panels.

9. Verifying correctness of all final power and signal connections to the PICS. The SYSTEM SUPPLIER shall make final adjustments to and calibrate all field elements provided with the PICS.

10. Verifying that:

    a. All components provided under this section are properly installed.

    b. The proper type, size and number of control wires with their conduits and junction boxes are provided and installed.

    c. Proper electric power circuits are provided for all components and systems.

    d. Provision, installation and termination of field and power wiring to PICS supplied control panels and field elements. Termination shall be made in accordance with final accepted interconnection diagrams developed by the SYSTEM SUPPLIER. The electrical subcontractor shall mark on the interconnect diagram the field wire numbers used for each termination point. The SYSTEM SUPPLIER shall finalize the interconnect diagrams by including these field wire numbers in the final as built version.

    e. Installation and termination of all specialty cables, including fiber optic cables, furnished by the SYSTEM SUPPLIER.

11. Requiring the SYSTEM SUPPLIER to observe and advise on the installation of equipment furnished by SYSTEM SUPPLIER and installed by CONTRACTOR to the extent required to certify, with the operational check-out tests, that the equipment will perform as required.

12. Ensuring that information on equipment provided under other Divisions and needed by the SYSTEM SUPPLIER to coordinate the PICS is provided in a timely manner.

K. Equipment found to be defective prior to system acceptance shall be replaced and installed at no additional cost to the OWNER.

L. In the bid price, the CONTRACTOR shall provide for obtaining the services of authorized field personnel from the manufacturers of specialty instruments and from the suppliers of application software packages as necessary. Should these personnel be required during installation, start-up and checkout of the respective portions of the PICS, such services shall be provided at no additional cost to the OWNER.

1.02 RELATED WORK

B. Divisions 11 - Field devices such as pump motors, solenoid valves, etc. and local control panels for specialized subsystems such as chemical feed systems, etc. are supplied and installed.

C. Division 15 – Mechanical. Installation of all mechanical piping and fittings, as well as in-line instruments supplied with and/or supplied for the PICS.

D. Division 16 - Electrical. All conduits are provided and installed under Division 16, Electrical. With the exception of certain specified special manufacturer's cables,

all wiring and cables are provided and installed under Division 16, Electrical.

1.02 SYSTEM INTEGRATION PLAN

A. Prior to any other shop drawing submittals the SYSTEM SUPPLIER shall submit a System Integration Plan (SIP). Other submittals received before this submittal will be returned without review.

B. The SIP shall identify, and provide details of, all new PICS functions. This shall include the following elements:

1. Field.
2. RTU.
3. System Inputs and Outputs.
4. Network/communications.

C. Field. Provide an Excel spreadsheet that covers all field instruments. For each instrument define the following:

1. Tag Number.
2. Instrument Type.
3. Specification Section supplied under.
4. Signal Type.
5. Range or On/Off states as applicable.

D. RTU. Provide an Excel spreadsheet that covers all new RTU. For each, define the following:

1. RTU Designation Number.
2. Location.
3. A list of I/O modules (existing and new individually identified) that will exist at project completion.

E. System Inputs and Outputs (I/O). Provide an Excel spreadsheet that lists all system I/O for the complete PICS. For each point, the list shall include the following:

1. PICS database tag number.
2. Signal Description.
3. I/O Type.
4. Range or On/Off state as applicable.

F. Network/communications. This shall provide a tabular listing identifying the following:

1. Ethernet switches listed by port and including spares.

2. Connected equipment to each port.
3. Spreadsheet listing all network connected components. For each, identify the network connection point and proposed or existing IP address.

G. Following RTU programming, revise the system I/O spreadsheet to include all pseudo points (differentiated from physical I/O) that are used by the HMI.

H. Provide a fully updated SIP as part of the final system documentation.

1.03 SUBMITTALS

A. Furnish, as prescribed under the General Requirements, all required submittals covering the items included under this section and its associated sections of the work.

B. Submit complete, neat, orderly, and indexed submittal packages. Handwritten diagrams are not acceptable and all documentation submittals shall be made using CADD generated utilities.

C. Partial submittals or submittals that do not contain sufficient information for complete review or are unclear will not be reviewed and will be returned by the ENGINEER as not approved.

D. All submitted component data sheets shall be marked to specifically identify the model/part numbers to be furnished.

E. Provide all shop drawing submittals on thumb drive in PDF format.

F. In addition to the shop drawing submittals required in the related specification sections, submit the submittals defined below covering the complete system.

1. System Performance. This submittal shall be a written description of how the operator will control the system and the system's subsequent response. Every piece of controllable equipment shall be separately described and the following information included:
   a. Use of local manual controls.
   b. Use of OIT/HMI software controls.
   c. Use of automatic controls.
2. Each functional description shall specifically identify any interlocks (hardware and software) and OIT/HMI alarms generated.
3. Operator Screens. This submittal shall include color copies of all proposed OIT/HMI operator screens.
4. Field Acceptance Test Plan. This submittal shall define the steps to be conducted during the required witnessed acceptance testing. The test shall be conducted in accordance with the general requirements set forth in Part 3 hereof. The submitted plan shall meet the following requirements:
   a. Each of the equipment covered in the system performance submittal shall be tested.

b. For each equipment test, the required operator control actions and system response shall be demonstrated on the complete system, including each operator action, the response and appropriate HMI display/alarm updates.

G. The Contractor and SYSTEM SUPPLIER are hereby specifically advised that the above submittals shall be Approved or Approved As Noted prior to any witnessed performance testing.

H. Loop Diagram Submittal. This submittal may be made in conjunction with the submittals required under related specification sections. Loop diagrams, consisting of complete wiring and/or plumbing diagrams for each control loop showing all terminal numbers, the location of the dc power supply, the location of any booster relays or common dropping resistors, surge arrestors, etc. The loop diagrams shall be divided into four areas for identification of element locations: PICS I/O point(s), panel face, back-of-panel, and field, respectively.

I. Test Procedures: Submit the procedures proposed to be followed during all required testing. Procedures shall include test descriptions, forms, and check lists to be used to control and document the required tests.

J. Test Reports: Upon completion of each required test, document the test by submitting a copy of the signed off test procedures to t.

1.04 FINAL DOCUMENTATION

A. After the demonstration tests have been completed and as a part of the final acceptance requirements, submit the PICS record drawings. Record drawings shall include, corrected for any changes that may have been made up through Substantial Completion:

1. System block diagram.
2. Network architecture diagram.
3. Instrument loop wiring diagrams.
4. Panel wiring diagrams.
5. Panel elevations.
6. Interconnection diagrams showing terminal numbers at each wiring termination.

B. Record drawings shall be developed or converted to AutoCAD 2021. Provide AutoCAD files on a USB flash drive.

C. Operating and Maintenance (O&M) Manuals: Provide the specified number of complete sets of three-ring bound O&M manuals in accordance with Division 1. Provide separate manuals for each Specification Section, clearly marked. Include descriptive material, drawings, and figures bound in appropriate places. Include:

1. Cross references to 3rd party O&M manuals.

2. Additional operating and maintenance instructions in sufficient detail to facilitate the operation, removal, installation, adjustment, calibration and maintenance of each component provided with the PICS.
3. Internal wiring diagrams (not already shown on the panel wiring diagram record drawings) for all components provided in the PICS that clearly show all terminal block number designations and wire numbers.
4. Bill of Materials identifying the manufacturer and complete part number of all components.
5. All the submittal data for each component from the approved shop drawing submittals with corrections made on approved as noted items.
6. A Compact Disk containing the shop drawing data in PDF format in the binder sleeve.

D. Provide a final System Integration Plan.

E. Refer to the individual specification sections of the PICS for final documentation requirements that are in addition to the above.

1.05 QUALITY CONTROL

A. Base bids for the SYSTEM SUPPLIER shall be as listed in the Contract Proposal. Panel fabrication shop shall be a UL listed panel shop. Acceptance of alternates shall be made based on price, location of the fabrication shop, accessibility of personnel, RTU programming knowledge, and Owner confidence. The SYSTEM SUPPLIER shall be subcontracted by and paid by the Contractor.

B. The SYSTEM SUPPLIER shall meet all of the requirements of these specifications, and, unless specifically stated otherwise, no prior acceptance of any subsystem, equipment, or materials has been made.

C. All equipment furnished by the SYSTEM SUPPLIER shall be of the latest and most recent design and shall have overall accuracy as guaranteed by the manufacturer.

D. Materials and equipment used shall be U.L. approved wherever such approved equipment and materials are available.

E. Component equipment shall be as supplied by one of the manufacturers named in the individual specification sections or approved equal. The design of the PICS is based on the first-named manufacturer's equipment if there is a difference.

F. To facilitate the Owner's operation and maintenance, products shall be of the same major manufacturer, with panel mounted devices of the same type and model as far as possible.

G. In order to insure the interchangeability of parts, the maintenance of quality, the ease of interfacing between the various subsystems, and the establishment of minimums with regard to ranges and accuracy, strict compliance with the above requirements shall be maintained.

H. The SYSTEM SUPPLIER shall designate a single point of contact for interface with the ENGINEER on this project. The ENGINEER reserves the sole right to approve or reject this point of contact.

I. The SYSTEM SUPPLIER 's selected project personnel shall meet the following requirements:

1. Project ENGINEER shall have at least 10 years' experience in installing similar systems and shall have a minimum of secondary education in the field of electronics or similar technical discipline.
2. Project technician assisting the project ENGINEER for field element calibration and check out shall have at least five years experience in installing similar systems.
3. Key staff resumes shall be submitted for ENGINEER’s approval with the Project Plan as further detailed under submittals.

J. Service Facility: The SYSTEM SUPPLIER shall have an established service facility from which qualified technical service personnel and parts may be dispatched upon call. Such a service facility shall be no more than six (6) hours travel time from the jobsite.

K. The SYSTEM SUPPLIER shall provide experienced personnel on-site to coordinate and/or perform installation, termination, and adjustment; on-site testing; Owner training; and startup assistance for the PICS.

L. The SYSTEM SUPPLIER shall provide, on-site, an experienced project ENGINEER to supervise and coordinate all of the on-site PICS activities. An experienced technician may be provided to assist the project ENGINEER in field element installation, field calibration, and checkout tests. The SYSTEM SUPPLIER 's project ENGINEER shall be on- site during the period required to effect all of the critical on-site activities related to the PICS, particularly the software debugging, PICS training, and witnessed testing activities.

1.06 STANDARDS

A. The design, testing, assembly, and methods of installation of the wiring materials, electrical equipment and accessories proposed under this Contract shall conform to the National Electrical Code and to applicable state and local requirements. UL listing and labeling shall be adhered to under this Contract.

B. Any equipment that does not have a UL, FM CSA, or other approved testing laboratory label shall be furnished with a notarized letter signed by the supplier stating that the equipment famished has been manufactured in accordance with the National Electric Code and OSHA requirements.

C. Any additional work needed resulting from any deviation from codes or local requirements shall be at no additional cost to the Owner.

D. International Society of Automation (ISA) and National Electrical Manufacturers Association (NEMA) standards shall be used where applicable in the design of

the PICS.

E. All equipment used on this project to test and calibrate the installed equipment shall be in calibration at the time of use. Calibration shall be traceable to National Institute of Standards (NIS - formally NBS) calibration standards.

F. For the purposes of uniformity and conformance to industry standard, provide analog signal transmission modes of electronic 4-20 ma DC. No other signal characteristics are acceptable.

G. Discrete signals are two-state logic signals. Use 120V ac sources on all discrete signals unless otherwise noted or shown.

H. Provide appropriately sized electrical transient protection devices for all electrical elements of the system as further defined in the individual specification sections. For field mounted devices, provide protector enclosures to the electrical Subcontractor for mounting and installation.

1.07 WARRANTY AND GUARANTEES

A. In accordance with Division 1, the SYSTEM SUPPLIER shall furnish to the Owner a written two year guarantee commencing with final acceptance, that all equipment and parts thereof, material and/or workmanship for the field elements, instruments, and control panels are of top quality and free from defects.

B. The SYSTEM SUPPLIER shall guarantee all equipment whether or not of his own manufacture.

1.08 SPARES AND EXPENDABLES

A. Obtain from the manufacturer(s) and provide the recommended critical spare parts as part of the work. Refer to the individual requirements listed in the associated specification sections for the PICS for specific parts to be provided as a minimum. The spare parts are the property of the Owner.

B. Obtain from the manufacturer(s) and furnish any special tools, calibration equipment and testing apparatus required for the proper adjustment and maintenance of the material provided.

PART 2 PRODUCTS (NOT USED)

PART 3 EXECUTION

3.01 SEQUENCE OF WORK

A. Coordination Meetings: In order to ensure timely performance of the Contract and the system's conformance with these specifications, coordination meetings shall be held. The first meeting will be held 30 days after award of the Contract to the Contractor. The Contractor and SYSTEM SUPPLIER shall provide for

their attendance at this meeting in their quotation. A schedule for additional coordination meetings (approximately one each month) will be derived at this initial meeting for periodic update, coordination, and conflict resolution during the project duration.

B. Prerequisite Activities and Lead Times: Do not start the following key project activities until the listed prerequisite activities have been completed and lead times have been satisfied:

1. Hardware Purchasing, Fabrication, and Assembly: Associated design related submittals completed (no exceptions, or approved as noted).
2. Shipment: Completion and approval of all design related submittals.
3. Startup: Operational Checkout Tests.
4. Owner Training: Owner training completed and O&M manuals delivered.
5. Demonstration Tests: Operational Check-out Tests, Startup, Owner Training, and Demonstration Test Procedures must be complete. Give 4 weeks' notice prior to the planned test start date.

C. Consoles, Panels, and Panel Mounted Equipment: Consoles, panels, and panel mounted equipment shall be assembled as far as possible at the SYSTEM SUPPLIER 's shop. No work, other than correction of minor defects or minor transit damage, shall be done on the panels at the jobsite.

3.02 PAYMENTS

A. General: All work provided under this Section and its associated Sections for the PICS shall be paid for in accordance with the approved payment Schedule of Values submitted by the Contractor. The approved Schedule of Values will be the basis for partial payment for work provided for the PICS.

B. Partial Payment for Work Completed: The breakdown in the Schedule of Values allows for the partial payment of work completed for the PICS. Before partial payment is considered for approval, each specific activity must be completed.

C. Substantial Completion: Substantial Completion for the project is as defined in the General Conditions. However, the following requirements must be fulfilled before consideration will be given for Substantial Completion of the PICS:

1. All PICS submittals have been completed.
2. The PICS has successfully completed the Demonstration Tests.
3. The required Owner training has been implemented.
4. All spares, expendables, and test equipment have been received by Owner.

D. Final Acceptance: PICS final acceptance is defined as the date when the ENGINEER issues a written notice of final acceptance. For this Section, the following must have been completed before consideration will be given to the issuance of notice of final acceptance:

1. All punch-list items have been checked off.
2. Revisions to the PICS O&M Manuals have been made (that may have resulted from the Demonstration Tests).

E. Partial Payment Limits: The partial payments for work provided for the PICS shall satisfy the following limiting maximum criteria (percentages of the lump sum pay item for the PICS):

1. Submittals (not including O&M Manuals) 15%
2. Training 5%
3. O&M Manuals 5%
4. Demonstration Tests 10%

3.03 PRODUCT HANDLING

A. Store and protect equipment until installation following the storage and handling instructions recommended by the equipment manufacturers. Place special emphasis on proper anti-static protection of sensitive equipment.

B. Protection During Construction: Throughout this Contract, provide protection for materials and equipment against loss or damage and from the effects of weather. Prior to installation, store items in indoor, dry locations. Provide heating in storage areas for items subject to corrosion under damp conditions. Provide covers for panels and other elements that may be exposed to dusty construction environments. Specific storage requirements shall be in accordance with the SYSTEM SUPPLIER's recommendations.

C. Corrosion Protection: Protect all consoles, panels, enclosures, and other equipment containing electrical or instrumentation and control devices, including spare parts, from corrosion through the use of corrosion-inhibiting vapor capsules. Prior to shipment, include capsules in the shipping containers, and equipment as recommended by the capsule manufacturer. During the construction period, periodically replace the capsules in accordance with the capsule manufacturer's recommendations. Replace all capsules just prior to Final Acceptance.

D. ESD Protection: Provide for the proper handling, storage, and environmental conditions required for the PICS components deemed static sensitive by the equipment manufacturer. Utilize anti-stat wrist straps and matting during installation of these items to prevent component degradation. Flooring used in control areas shall be reviewed and approved by the SYSTEM SUPPLIER.

E. Adequately pack manufactured material to prevent damage during shipping, handling, storage and erection. Pack all material shipped to the project site in a container properly marked for identification. Use blocks and padding to prevent movement.

F. Ship materials that must be handled with the aid of mechanical tools in wood-framed crates.

G. Ship all materials to the project site with at least one layer of plastic wrapping or other approved means to make it weatherproof. Anti-stat protection shall be provided for all sensitive equipment.

H. Inspect the material prior to removing it from the carrier. Do not unwrap equipment until it is ready to be installed. If any damage is observed, immediately notify the carrier so that a claim can be made. If no such notice is given, the material shall be assumed to be in undamaged condition, and any subsequent damage that is discovered shall be repaired and replaced at no additional expense to the Owner.

I. The Contractor shall be responsible for any damage charges resulting from the handling of the materials.

3.04 INSTALLATION

A. Material and Equipment Installation: Install the PICS in locations indicated on the Drawings and follow manufacturers' installation instructions explicitly, unless otherwise indicated. Wherever any conflict arises between manufacturers' instruction and these Contract Documents, follow ENGINEER's decision, at no additional cost. Keep copy of manufacturers' instructions on the jobsite available for review at all times.

B. Install materials and equipment in a workmanlike manner utilizing craftsmen skilled in the particular trade. Provide work which has a neat and finished appearance. Coordinate I&C work with the Owner and work of other trades to avoid conflicts, errors, delays, and unnecessary interference with operation of the existing plant during construction.

C. Provide finish on instruments and accessories that protects against corrosion by the elements in the environment in which they are to be installed. Finish both the interior and exterior of enclosures. Provide extra paint of each color used in the material from the manufacturer for touch-up purposes.

D. Equipment Finish: Provide materials and equipment with manufacturer's standard finish system. Provide manufacturer's standard finish color, except where specific color is indicated. If manufacturer has no standard color, finish equipment with light gray color.

E. Cleaning and Touch-up Painting: Keep the premises free from accumulation of waste material or rubbish. Upon completion of work, remove materials, scraps, and debris from premises and from interior and exterior of all devices and equipment. Touch-up scratches, scrapes, or chips in interior and exterior surfaces of devices and equipment with finishes matching as nearly as possible the type, color, consistency, and type of surface of the original finish. Clean and polish the exterior of all panels and enclosures upon the completion of the demonstration tests.

3.05 SYSTEM OPERATING CRITERIA

A. Stability: After controls have taken corrective action, as result of a change in the controlled variable or a change in setpoint, oscillation of final control element shall not exceed two (2) cycles per minute or a magnitude of movement of 0.5 percent full travel.

B. Response: Any change in setpoint or change in controlled variable shall produce a corresponding corrective change in position of final control element and become stabilized within 30 seconds.

C. Agreement: Setpoint indication of controlled variable and measured indication of controlled variable shall agree within 2 percent of full scale over a 6:1 operating range.

D. Repeatability: For any repeated magnitude of control signal, from either an increasing or decreasing direction, the final control element shall take a repeated position within 0.5 percent of full travel regardless of force required to position final element.

E. Sensitivity: Controls shall respond to setpoint deviations and measured variable deviations within 1.0 percent of full scale.

F. Performance: All instruments and control devices shall perform in accordance with manufacturer's specifications.

3.06 TRAINING

A. The cost of training programs to be conducted with Owner's personnel shall be included in the Contract price. The training and instruction, insofar as practicable, shall be directly related to the System being supplied.

B. The SYSTEM SUPPLIER shall provide detailed manuals to supplement the training courses. The manuals shall include specific details of equipment supplied and operations specific to the project.

C. The SYSTEM SUPPLIER shall make use of teaching aids, manuals, slide/video presentations, etc. After the training services, such materials shall be delivered to Owner.

D. The training program shall represent a comprehensive program covering all aspects of the operation and maintenance of the system.

E. All training schedules shall be coordinated with, and at the convenience of the Owner. Shift training may be required to correspond to the Owner's working schedule.

F. Specific details of the nature and duration of training to be provided are defined in the individual specification sections.

3.07 TESTING – GENERAL

A. All elements of the PICS, both hardware and software, shall be tested to demonstrate that the total system satisfies all of the requirements of the Contract Documents

B. As a minimum, the testing shall include shop tests, operational check-out tests, and Demonstration Tests.

C. Each test shall be in the cause and effect format. The person conducting the test shall initiate an input (cause) and, upon the system producing the correct result (effect), the specific test requirements will have been satisfied.

D. All tests shall be conducted in accordance with, and documented on, prior approved procedures, forms, and checklists. Each specific test to be performed shall be described and a space provided after it for signoff by the appropriate party after its satisfactory completion. Copies of these signoff test procedures, forms, and checklists will constitute the required test documentation.

E. Provide all special testing materials and equipment. Wherever possible, perform tests using actual process variables, equipment, and data. Where it is not practical to test with real process variables, equipment, and data, provide suitable means of simulation. Define these simulation techniques in the test procedures.

F. The SYSTEM SUPPLIER shall coordinate all of their testing with the Contractor, the ENGINEER, all affected suppliers, and the Owner.

G. The ENGINEER reserves the right to test or retest any and all specified functions whether or not explicitly stated in the approved test procedures. The ENGINEER's decision shall be final regarding the acceptability and completeness of all testing.

3.08 OPERATIONAL READINESS TEST (ORT)

A. Prior to startup and demonstration testing, certify that the entire installed PICS (inspected, tested and documented) is ready for operation. These inspections and tests shall include Loop/Component inspections and tests. Toward the end of these checkout tests, download the HMI software and test the system loop by loop to complete the PICS checkout tests. The SYSTEM SUPPLIER shall fully debug problems in the system as a whole. Final approval of control software will not be based on written descriptions of software functions alone, but on actual performance in the field.

B. Check the entire PICS for proper installation, calibration and adjustment on a loop-by-loop and component-by-component basis to ensure that it is in conformance with related submittals and the PICS Specifications.

C. The Loop/Component Inspections and Tests shall be implemented using approved forms and checklists. Example sheets are provided at the end of this Specification Section. These shall be developed by the SYSTEM SUPPLIER and submitted for approval.

D. Maintain the Loop Status Reports and Component Calibration Sheets at the jobsite and make them available to the ENGINEER at any time.

E. Witnessing: These inspections and tests do not require witnessing. However, the ENGINEER will review the Loop Status Sheets and Component Calibration Sheets and spot-check their entries periodically and upon completion of the Operational Check-out Tests. Correct any deficiencies found.

F. Final Documentation: The completed reports and sheets shall be assembled in one document and submitted together with a completed Manufacturer's Check-Out Certification.

3.09 FIELD ACCEPTANCE TEST (FAT)

A. Once the PICS has passed the ORT, the SYSTEM SUPPLIER shall perform a witnessed Field Acceptance Test (FAT) on the complete PICS. The FAT shall demonstrate that the PICS is operating and in compliance with the Contract requirements. Each specified function shall be demonstrated on a paragraph-by-paragraph, and site-by-site basis.

B. Prior to the FAT, the entire installed PICS shall be certified in writing by the Contractor that it is ready for operation.

C. The system shall operate for a continuous 100 hours without failure before this test will be considered successful.

D. The FAT shall cover the entire PICS, including control functions, alarms, and status monitoring. Test procedures used for factory tests may be adopted for these tests if modified as required.

3.10 30-DAY SYSTEM ACCEPTANCE TEST (SAT)

A. After completion of the Field Acceptance Tests, the entire system shall operate for a period of 30 consecutive days, under conditions of full plant process operation, without a single non-field repairable malfunction.

B. Provide complete O&M Manuals for the PICS at the jobsite at least two weeks prior to the SAT.

C. During this test, plant operating and SYSTEM SUPPLIER personnel shall be present as required. The SYSTEM SUPPLIER is expected to provide personnel for this test who have an intimate knowledge of the hardware and software of the system.

D. While this test is proceeding, the Owner shall have full use of the system. Only plant operating personnel shall be allowed to operate equipment associated with live plant processes.

E. Any malfunction during the tests shall be analyzed and corrections made by the

SYSTEM SUPPLIER. The ENGINEER and/or Owner will determine whether any such malfunctions are sufficiently serious to warrant a repeat of this test.

F. Any malfunction, during this 30 consecutive day test period, which cannot be corrected within 24 hours of occurrence by the SYSTEM SUPPLIER's personnel, or more than two similar failures of any duration, will be considered as a non-field-repairable malfunction.

G. Upon completion of repairs, by the SYSTEM SUPPLIER, the test shall be repeated as specified herein.

H. In the event of rejection of any part or function, the SYSTEM SUPPLIER shall perform repairs or replacement within 90 days.

I. All data base errors must be corrected prior to the start of each test period. The 30-day test will not be considered successful until all databases are correct.

J. The total availability of the system shall be greater than 99.5 percent during this test period.

1. Availability is given by "(Total Time-Down Time) / Total Time".
2. Down times due to power outages or other factors outside the normal protection devices or back-up power supplies provided, shall not contribute to the availability test times above.

K. Upon successful completion of the 30-day Site Acceptance Test and subsequent review and approval of complete system final documentation, the system shall be considered substantially complete and the warranty period shall commence.

PART 4

Loop Check-out Sheet

Project Name:		Owner's Project No. (if applicable):					Page of
Project Owner:		Regulatory Agency Project No. (if applicable):					
HDR Project		Date:					
LEAK AND TERMINATION/CONTINUITY CHECKS							
	FIELD					**CONTROL CAB**	
DESCRIPTION	LEAK CHECK(1)			TERM/CONT CHECK(2)		TERM/CONT CHECK(2)	
	Device Tag No.	Process Conn.	Signal Tube	Device Tag No.	Termination Ident.	Device Tag No.	Termination Ident.

1. Leak check for pneumatic signal tubing to be per ISA-PR7.1.

2. Termination/continuity check includes check at terminated equipment for: (a) correct polarity, (b) appropriate signal generation, transmission and reception, and (c) correct shield & ground terminations.

OPERATOR INTERFACE CHECK-OUT

MONITORING POINTS OBSERVED

PARAMETER TYPE	TAG NO.	TAG NO.	TAG NO.	TAG NO.	TAG NO.	TAG NO.
PROCESS VAR						
EQUIP STATUS						
ALARM POINT						

OPERATOR CONTROL FUNCTIONS CHECKED

FUNCTION TYPE	TAG NO.	LOCATION	TAG NO.	LOCATION	TAG NO.	LOCATION

AS LEFT SETTINGS

TAG NO.	SWITCH & ALARM SP	CONTROLLERS			
		Gain	Reset, rpm	Deriv. (rate), min	PV Set Point

Describe all interlocks checked, equipment started/stopped, valves/operators stroked. Describe modes of operation checked, and location of operator interface (local/remote).

I certify that the control loop referenced on this page has been completely checked and functions in accordance with applicable drawings and specifications.

Certified by:_____ Date:_____

Instrument Calibration Sheet

Project		Owner's Project No. (if	
Project		Regulatory Agency Project	
HDR Project		Date:	
Control Loop			
Instrument		Transmitter/gauge	
Manufacturer:		Switch set-point:	
Model No.		Switch dead band:	
Serial No.		Switch range:	

TRANSMITTERS AND INDICATORS

	INCREASING INPUT			**DECREASING INPUT**		
% OF SPAN	**INPUT**	**OUTPUT**	**ERROR (% of span)**	**INPUT**	**OUTPUT**	**ERROR (% of span)**
0%						
25%						
50%						
75%						
100%						
Other (if applicable)						
Other (if applicable)						

SWITCHES

	INCREASING INPUT			**DECREASING INPUT**		
ACTUATION POINT	**INPUT**	**OUTPUT**	**ERROR (% of range)**	**INPUT**	**OUTPUT**	**ERROR (% of range)**

High (Increasing input)						
Low (Decreasing input)						

Maximum allowable error (per Contract Documents): _____
_____
_____

Remarks: _____
_____
_____
_____
_____

_____
_____
_____
_____
_____
_____
_____

_____
_____
_____
_____
_____
_____
_____

CALIBRATION EQUIPMENT UTILIZED

DEVICE TYPE	**MFR/MODEL NO.**	**ACCURACY**	**NIST TRACEABILITY?**

Certified by:_____ Date Certified:_____

END OF SECTION

SECTION 13310

PROCESS INSTRUMENTATION AND CONTROL SYSTEM

FIELD INSTRUMENTS

PART 1 GENERAL

1.01 SCOPE OF WORK

A. This Specification Section covers work related to the various field instruments to be supplied with the Process Instrumentation and Control System (PICS).

B. Field instrumentation, as specified herein, shall be furnished by the same SYSTEM SUPPLIER furnishing services and equipment as outlined in 13300 as applicable.

1.02 RELATED WORK

A. Specification Section 13000 defines work and general requirements associated with the overall PICS.

B. Specification Section 13315 defines work associated with the control panels that interface the field instrumentation into the overall PICS.

1.03 SUBMITTALS

A. Submit the following Field Instrumentation Shop Drawings in a single package:

1. Catalog information, descriptive literature, wiring diagrams, and shop drawings on all components of the field instruments, including all miscellaneous electrical and mechanical devices furnished under this section.
2. Complete part numbers for all instruments, including any options, shall be identified. Provide manufacturer's data that correlates to the complete part number including all options.
3. Individual data sheets for all components of the field instruments to supplement the above information by citing all specific features for each specific component (e.g. scale range, materials of construction, special options included, etc.). Each component data sheet shall bear the component name and instrument tag number designation shown in the Drawings and Specifications.
4. Installation details for all field mounted devices to show conformance with the Contract Documents.
5. Configuration documentation for all programmable devices to indicate actual settings used to set the device scale, range, trip points, and other control parameters.

PART 2 PRODUCTS

2.01 GENERAL REQUIREMENTS

A. Equipment to be installed in a hazardous area shall meet Class, Group, and Division classification as shown on the Contract Electrical Drawings, or comply with the local or National Electrical Code, whichever is the most stringent requirement.

B. All instruments requiring plumbing shall utilize stainless steel components as follows:

1. Test Tap: Shall consist of Crawford Fitting Co. Swagelock quick connects Series QC4-DE, or equal.
2. Tubing, Stainless Steel: Shall be ASTM A 312, TP 316, seamless, soft annealed with 0.065 inch wall. Fittings shall be ASTM A 276, TP 316 compression or socket weld type.
3. Valve, Ball: Shall be stainless steel ball valves, Whitey Series 40, Hoke Flamite Series 7100, or equal.

C. All instruments shall be provided with mounting hardware and floor stands, wall brackets, or instrument racks.

D. All transmitters shall be provided with either integral indicators or conduit mounted indicators in process units, accurate to two percent. Indicator readouts shall be linear in process units.

E. All transmitters located outside shall be equipped with sunshields.

2.02 SURGE PROTECTION

A. Surge suppressors and arrestors meeting the requirements of ANSI Standard C-62.41 (latest revision) shall be provided as further detailed below.

B. AC Powered Instruments. Lightning and surge protection shall be provided on both the AC power supply and signal lines. The instrument, a breaker and the surge suppressor shall be mounted on a ½-inch aluminum plate equipped with 1/8 inch sun shields on top and both sides with front panel facing north wherever practical. The mounting plate shall be connected to a ground rod via a #10 gauge wire. The protectors shall meet the following criteria:

1. NEMA 4X small case, conduit mounted enclosure.
2. Response time of less than five nanoseconds.
3. AC Power protection: IEEE/ANSI Std. C-62.41 rated C3 at 330 Volts clamping level.
4. Signal line protection: 10,000 Amp 8 x 20 microsecond surge, clamped at 36 Volts clamping level.
5. Test jacks for low level signal monitoring.
6. Manufacturer/model: ASCO Model 265 or approved equal.

C. Loop Powered Instruments. Lightning and surge protection shall be provided on the 4-20 mA DC signal line. The protectors shall meet the following criteria:

1. Encapsulated in Stainless Steel Pipe nipples for in-line conduit mounting.
2. Response time of less than one nanosecond.
3. Capable of withstanding up to 400 occurrences of 500 Amps at 10 x 1 millisecond.
4. Series resistance of 5 ohms per line.
5. Protection of both lines plus shield.
6. Manufacturer/model: ASCO Model 157 or approved equal.

2.03 FIELD INSTRUMENTS

A. Provide the field instruments shown on the Contract Drawings and as further defined herein.

B. RADAR Level Sensor. The system shall consist of a sensor (Level Element, LE) that uses a non-contact RADAR measurement technique to measure the liquid level in a vessel, tank or basin, interconnecting cable, and electronics unit that produces an analog signal proportional to level (Level Indicating Transmitter, LIT).

1. System Performance:
   a. Overall system accuracy shall be plus or minus 0.25 percent of span or 0.1 inches, whichever is greater, automatically compensated for temperature.
   b. The electronics unit shall contain preset algorithms containing the necessary factors to convert a weir level into a flow value.
   c. The system shall be field calibratable without the use of external calibrators.
2. Sensor Materials:
   a. Chemical tank locations – All Teflon.
   b. Other locations – PVC and Teflon.
3. Ratings:
   a. Electronics Unit – NEMA 4X.
4. Electrical:
   a. Operating voltage supply: 12 to 35 Volts DC up to 22 mA
5. Functional:
   a. Span, output, linearization and digital output scaling shall be adjustable at the transmitter.
   b. Echo status and loss indication shall be provided at the transmitter.
   c. Electronic unit display: 16 character, backlit LCD.
6. Manufacturer, Model series:
   a. VegaPuls C-21, intrinsically safe, with Vega Mounting Bracket Series

b. Approved equal.

C. Pressure Transducer. The pressure transducer shall sense variations in pressure and produce a standard current output signal linear with gage pressure (Pressure Indicating Transmitter, PIT), differential pressure (Differential Pressure Indicating Transmitter, DPIT), flow via square root extraction of differential (Flow Indicating Transmitter, FIT) or, via inference, level (Level Indicating Transmitter, LIT). The transducer shall use a diaphragm activated cell method to monitor process pressure via impulse piping connected through a valve manifold and, where noted, diaphragm seals.

1. Performance:
   a. Total accuracy of less than or equal to 0.2% of span for +/- 50 degree temperature changes from 1:1 to 10:1 range down.
   b. Adjustable zero and span values anywhere within the nominal range.
   c. Differential transducers shall provide direct reading or integral square-root extraction.
2. Materials:
   a. Metallic Wetted parts – 316 Stainless Steel.
   b. Wetted O-rings – Glass filled TFE.
   c. Fill liquid - NSF approved for use in drinking water applications.
   d. Electronics Housing – Low copper aluminum with polyurethane paint.
   e. Mounting hardware – 316 Stainless Steel.
3. Ratings:
   a. Enclosure – NEMA 4X
4. Electrical:
   a. Transmitter excitation: 10.5 to 32 Volts DC at up to 18 mA.
5. Options:
   a. Provide surge/lightning protection within the transmitter.
   b. Provide 3-way SS valve manifold.
   c. Provide integral LCD indicator with displayed value in process units.
   d. Provide minimum half inch process connection.
6. Manufacturer, Model series:
   a. Blue Ribbon.
   b. Approved equal.

D. Rain Gauge:

1. Provide Rain Gauge tipping bucket , 8” collector. Texas Electronics TR-525USW or approved equal.

E. Limit Switch. The limit switch shall detect the closed position of a hatch, door, check valve etc. by means of an actuator. The actuator shall energize the switch

while the door is closed. The SYSTEM SUPPLIER is responsible for the proper selection of the limit switch for every application.

1. General:
   a. Actuator orientation: As required for application
   b. Actuator mechanism: Adjustable lever roller.
   c. Switch shall be mounted on the static portion of the door or hatch.
2. Materials:
   a. Normal applications: Phosphate coated zinc with Epoxy coating.
   b. Corrosive locations: All 316 Stainless Steel including actuating lever.
3. Ratings:
   a. NEMA 4X for normal applications.
   b. NEMA 6 where potential submergence exists.
   c. Use explosion proof switches with factory installed cable for all Class I rated locations.
4. Electrical:
   a. Normally open and normally closed dry contacts
   b. Dry contacts rated to 10 Amps at 120 VAC
5. Options:
   a. Provide stainless steel supports/mounting and strike plates as required.
6. Manufacturers:
   a. Honeywell, model HDLS or LSX as applicable
   b. Approved equal

F. Level Switch, Float. The level switch shall be a direct acting, weighted float suspended on its own cable. As the liquid level rises the float tilts and actuates a hermetically sealed mercury switch inside the float. The cable shall be terminated within a junction box located outside the tank or basin. For multiple float applications, all cables shall terminate in a single junction box.

1. Materials:
   a. Float wetted part – Polypropylene
   b. Cable – PVC jacketed
   c. Junction box – 316 SS
2. Ratings:
   a. Junction box – NEMA 4X
3. Electrical:
   a. Dry contact rated to 4.5 Amps at 120 VAC
   b. Normally open or normally closed as required for the application
4. Options:
   a. Provide stainless steel supports/mounting accessories as required.
5. Manufacturer, model:
   a. Anchor Scientific, Roto-float type S
   b. Approved equal.

PART 3 EXECUTION

3.01 INSTALLATION

A. Install the PICS field instruments in strict accordance with the respective manufacturer's instructions and recommendations, in locations as shown on the Drawings, and as indicated on the installation details of the Drawings.

B. Provide surge protection enclosures to the electrical sub-contractor for mounting and installation. The enclosures shall be fully wired internally. Coordinate grounding requirements with Division 16, Electrical.

C. Fully calibrate each instrument.

END OF SECTION

SECTION 13315

PROCESS INSTRUMENTATION AND CONTROL SYSTEM

CONTROL PANELS

PART 1 GENERAL

1.01 SCOPE OF WORK

A. This Specification Section covers work related to the control panels and enclosures to be supplied with the Process Instrumentation and Control System (PICS).

B. The control panels, as specified herein, shall be furnished by the same SYSTEM SUPPLIER furnishing services and equipment as defined under Specification Section 13300.

C. The SYSTEM SUPPLIER shall design, furnish and install all interior wiring within the control panels and furnish complete wiring diagrams showing the electrical circuits inside the panel and interconnections between the panel and the external instruments and components.

D. Size control panel to adequately dissipate heat generated by equipment mounted inside or on the panel front face.

E. SYSTEM SUPPLIER shall furnish the following control panels.

1. Lift Station Control Panel (LSCP).

1.02 RELATED WORK

A. Specification Section 13300 defines work associated with the overall PICS,

B. Remote Telemetry Unit (RTU) are to be mounted in control panels hereunder. RTU are defined in Specification Section 13330.

C. The panels defined hereunder are installed under Division 15, Mechanical.

1.03 SUBMITTALS

A. Submit the following control panel shop drawings in a single package:

1. Layout diagrams for all control panels and enclosures. Include panel elevations (front, side, interior), and sizing. Panel front elevations shall be of sufficient scale to allow all engraved nameplates and inscriptions to be legible without the use of schedules.

2. A complete Bill of Materials for each panel cross-referenced to the panel layout drawings and identifying the manufacturer and complete part number of all components.
3. Wiring diagrams for all control panels. Diagrams shall be complete electrical wiring diagrams showing all components and all auxiliary devices such as relays, alarms, fuses, lights, fans, heaters, etc. All wires and terminals shall be numbered on the diagrams, and line cross-references shall be labeled. Include wiring interface to the RTUs where applicable. Include on these drawings a tag number to identify each component and referenced to a component identification list.
4. Data sheets for all components. The data sheets shall be marked to indicate those portions applicable to the components to be furnished.
5. Power requirements and heat dissipation summary for all control panels. Power requirements shall state required voltages, currents, and phase(s). Heat dissipations shall be maximums and shall be given in Btu/hr. The summary shall be supplemented with calculations.

PART 2 PRODUCTS

2.01 GENERAL REQUIREMENTS

A. Equipment to be installed in a hazardous area shall meet Class, Group, and Division classification as shown on the Contract Electrical Drawings, or comply with the local or National Electrical Code, whichever is the most stringent requirement.

B. Electronic equipment shall utilize printed circuitry suitably coated to prevent contamination by dust, moisture and fungus. Solid-state components shall be conservatively rated for their purpose, to assure optimum long-term performance and dependability over ambient atmosphere fluctuations and 0 to 100 percent relative humidity. The field mounted equipment and system components shall be designed for installation in dusty, humid, and slightly corrosive service conditions.

C. All equipment shall be designed to operate on a 60-Hertz alternating current power source at a normal 120 volts, plus or minus 10 percent, except where specifically noted. All regulators and power supplies required for compliance with the above shall be provided between power supply and interconnected instrument loop. Where equipment requires voltage regulation, constant voltage transformers shall be supplied.

D. All equipment, cabinets and devices furnished hereunder shall be heavy-duty type, designed for continuous industrial service. The system shall contain products of a single MANUFACTURER, insofar as possible, and shall consist of equipment models which are currently in production.

E. The equipment furnished shall be designed to operate satisfactorily between 0 degrees C and 40 degrees C for indoor panels and 50 degrees C for outdoor panels at up to 95 percent Relative Humidity (non condensing).

F. Except where specifically noted otherwise, all outdoor panels and enclosures containing electronic or electrical components shall be equipped with sunshields on both sides, the front, the back and the top with a minimum separation of one inch and a maximum separation of one and one-half inches. Sun shields shall be 14 gauge Stainless Steel or 12 gauge Anodized Aluminum or thicker. Finish with reflective white, two part epoxy coating or reflective, white, polyester powder deposited coating.

G. All outdoor control panels and enclosures shall be equipped with 3 ½" stainless steel mounting uni-struts across the width of the back. For free-standing panels the struts shall be located half-way up the panel and six inches from the top. For other panels they shall be located 3" from the top and 3" from the bottom.

H. All switches shall have double-pole, double-throw contacts rated at a minimum of 600 volts-amperes (VA), unless specifically noted otherwise.

I. All equipment shall be designed and constructed so that in the event of a power interruption, the equipment specified hereunder shall resume normal operation without manual resetting when power is restored.

J. All discrete inputs entering the panel shall be wetted by 120 VAC. Provide isolation relays if necessary to accommodate this requirement.

K. All discrete output signals shall be equipped with interposing relays to electrically isolate them from the control system I/O.

2.02 LIGHTNING/SURG SUPPRESSION

A. Surge suppressors and arrestors meeting the requirements of ANSI Standard C-62.41 (latest revision) shall be provided as further detailed below.

B. DC Signals. Lightning and surge protection shall be provided on all DC signal wires entering or leaving the panel. The protectors shall meet the following criteria:

1. 35 mm DIN rail mounted with spring terminals.
2. Response time of less than one nanosecond.
3. Operating signal current: up to 0.5 A
4. Capable of withstanding 5,000 Amps at IEEE/ANSI C-62.41 8 x 20 microseconds combination wave.
5. Nominal series resistance of less than 2 ohms each leg
6. Manufacturer/model:
    a. Phoenix Contacts
    b. No substitutions

C. AC Signals. Lightning and surge protectors for all incoming 120 VAC discrete signals lines shall meet the following criteria:

1. Serial protection.
2. Nominal operating voltage: 120 VAC 47/63 Hz.
3. Response time of less than 0.25 nanoseconds.
4. Capable of withstanding up to 40,000 Amps at IEEE/ANSI C-62.41 8 by 20 microseconds combination wave.
5. Manufacturer/model:
    a. Phoenix Contact
    b. No Substitutions

D. Single phase AC Power. Lightning and surge protectors for AC power supply lines up to 15 Amps service shall meet the following criteria:

1. Serial protection with replaceable fuse.
2. Failure indicator.
3. Response time of less than five nanoseconds.
4. Capable of withstanding up to 10,000 Amps at IEEE/ANSI C-62.41 8 by 20 microseconds combination wave.
5. Manufacturer/model:
    a. Phoenix Contact
    b. No substitutions

E. Single phase AC Power (over 15Amps). Lightning and surge protectors for AC power supply lines over 15 Amps service shall meet the following criteria:

1. Parallel protection using MOVs and thermal fusing technology.
2. Failure indicator
3. Response time of less than five nanoseconds.
4. Capable of withstanding up to 6,500 Amps at IEEE/ANSI C-62.41 8 x 20 microseconds combination wave.
5. Manufacturer/model:
    a. Phoenix Contact
    b. No substitutions

F. Three phase AC Power. Lightning and surge protectors for 480 VAC power supply lines shall meet the following criteria:

1. Designed specifically for three phase 480/277 VAC wye connected power supply lines.
2. Wall mountable IP66/NEMA 4x stainless steel enclosure.
3. Failure indicators.
4. Response time of less than twenty-five nanoseconds.
5. Capable of withstanding up to 50,000 amp surge current per phase.
6. Manufacturer/model:
    a. Phoenix Contact SYSTEMTRAB 2800718.

b. Approved equal.

2.03 LIFT STATION CONTROL PANEL

A. The Lift Station Control Panel (LSCP) shall be NEMA 4X stainless steel rack mounted.

B. The LSCP shall contain the following major elements:

1. PICS equipment.
2. Backup float Relay Logic.
3. RTU
4. OIT mounted on the face of the control panel
5. Cellular Router for connectivity back to the WRF
6. System human-machine interface (HMI) interface
7. UPS
8. Solar controller

C. PICS equipment shall be as shown on the Instrumentation Drawings and as defined in Division 13.

D. Electrical equipment shall be as shown on the Electrical Single Line Drawing and as defined in Division 16.

E. Relay logic as depicted in the Electrical Elementary Drawings shall be provided to control the pumps in the event of failure of the automatic RTU control functions. The logic shall be powered by its own dedicated Uninterruptible Power Supply.

F. The LSCP shall be force ventilated. Intake louvers shall be high and exhaust fan shall be low. Aluminum sunshields shall be provided on the top, sides and front of the enclosure

G. PICS equipment shall include external Solar PV panel, Alarm and Area light, Rain Gauge.

2.04 CONTROL PANELS AND ENCLOSURES

A. Finish:

1. All front panel openings for panel-mounted equipment shall be cut with counter-boring and provided with trim strips as required to give a neat finished appearance.
2. With the exception of stainless steel panels, all steel panel surfaces shall be treated with phosphatized treatment inside and out, and then finished

on the exterior with two coats of baked enamel of the approved color. Interiors of panels shall be white, ANSI No. 51.

3. Stainless steel panels shall be No. 4 milled, stainless steel.

B. Doors:

1. All control panels shall have a continuous piano hinge door for ease of access. A minimum of 80% of the panel interior shall be exposed by doors.
2. NEMA 4X rated panel door openings shall be sealed and fully gasketed.
3. The inside of each door shall be equipped with a print pocket. Provide individually laminated 11x17 sheets for all wiring diagrams.
4. Two-door enclosures shall have a removable center post.
5. Sealed panel doors shall be equipped with quick-release latches.
6. NEMA 1 rated panel doors shall be equipped with a three-point latching mechanism.
7. Where noted or shown on the drawings, doors shall be equipped with a fully gasketed glass window to allow viewing of internally mounted devices without opening the door.

C. All components and terminals shall be accessible without removing other components except for covers.

D. All conduit entry shall be from the bottom only.

E. No components shall be mounted on the interior sides of any panel.

F. All panels shall be provided with an isolated copper grounding bus to ground all signal shield connections.

G. Control Panels containing PICS control system equipment shall each be equipped with an internal, hand-switch controlled, LED light and 120V, 15 amp, duplex utility receptacle.

H. All panels shall be provided with laminated as built electrical wiring diagrams in each panel.

I. Nameplates:

1. All front-face panel mounted controls and indicators shall be equipped with 10-year outdoor-rated adhesive laminated plastic nameplates to completely define their use. Provide Brady Type BBP31 or BBP33 as applicable or approved equal.
2. All internal components shall be equipped with identification tags
3. Each wire shall be uniquely identified and shall be labeled.

J. Power Supplies.

1. Uninterruptible power supplies (UPS) shall be provided in all control panels as follows:
    a. Size the supplies for all internal equipment plus an additional 20% spare capacity.
    b. Provide 15 minutes battery back-up capability at full load.
    c. Provide relay option card for indication of “On UPS Power” and “Low Battery Level”.
    d. For outdoor panels provide an UPS and battery rated for operation at up to 50 degrees C.
2. Provide two diode-auctioneered DC power supplies for analog signal use.
3. Provide individually fused DC power for field transmitters.

K. Electrical:

1. Main circuit breaker and branch circuit breaker for each branch circuit as required to distribute power from the main power feed.
2. All breakers accessible when the panel door is open.
3. No more than 20 devices on any single circuit.
4. No more than 12 amps for any branch circuit.
5. Panel (or site) lighting, receptacles, heaters, controls, telemetry and fans on separate branch circuits.

L. Wiring:

1. Power wiring shall be 300 volt, type THWN stranded copper, No. 14 AWG size, for 120V service.
2. Discrete wiring shall be 300-volt type THWN stranded copper, sized for the current carried, but not smaller than No. 16 AWG.
3. Analog signal wiring shall be 300 volt, stranded copper in twisted shield pairs, no smaller than No. 16 AWG.
4. Panel wiring shall be routed within wire troughs or panduits.
5. Hinge wiring shall be secured at each end with the bend portion protected by a plastic sleeve.
6. Analog or dc wiring shall be separated from any ac power or control wiring by at least six inches.
7. Terminal blocks shall be provided for all field wiring entering the panel. The greater of 4 or 15% spare terminal blocks shall be provided.
8. No more than one wire per screw and yoke termination.

M. Construction:

1. Minimum metal thickness: 14-gauge.
2. Stiffeners as required to prevent deflection under instrument loading and permit lifting without racking or distortion.
3. When required, removable lifting rings and fill plugs to replace rings after installation.

N. Miscellaneous Equipment:

1. All panels shall be protected from internal corrosion by the use of corrosion – inhibiting vapor capsules, Northern Instruments Model Zerust VC, Hoffman, model A-HCI, or equal.
2. All sealed panels shall be equipped with combination drain/breathers, Crouse-Hinds model ECD18; or equal.
3. When noted on drawings, panels shall be equipped with thermostatically controlled space heaters to maintain internal temperatures above dew point.

O. All panels shall be manufactured items, Hoffman Engineering, or equal.

2.05 FRONT PANEL DEVICES

A. Potentiometer. Units shall meet the following:

1. Three-terminal potentiometers with a total resistance of 1000 ohms and a power dissipation rating of 2 watts
2. Oil-tight construction, rated NEMA 13
3. Resolution of 1 percent, and linearity of plus or minus 5 percent.
4. Panel mounting accommodating panel thickness between 1/16 to ¼ inch.
5. Legend plates with marking as noted.
6. Allen-Bradley, type 800T, or equal.

B. Selector Switch. Units shall meet the following:

1. Heavy-duty, oil-tight, industrial type selector switches rated for NEMA 4 service.
2. Contacts rated for 120-volt ac service at 10 amperes continuous.
3. Number of positions and contact arrangements as required.
4. Factory-engraved legend plate indicating position definition.
5. Panel mounting accommodating panel thickness between 1/16 to ¼ inch.
6. Black knob type operator.
7. Square D Class 9001, Type K; Allen-Bradley type 800T, or equal.

C. Pushbutton. Units shall meet the following:

1. Heavy-duty, oil-tight, industrial type push buttons rated for NEMA 4 service.
2. Contacts rated for 120-volt ac service at 10 amperes continuous.
3. Number of positions and contact arrangements as required.
4. Factory-engraved legend plate indicating function.
5. Panel mounting accommodating panel thickness between 1/16 to ¼ inch.
6. Operator: Red extended head for STOP, green flush head for START, black flush head for other functions.
7. Square D Class 9001, Type K; Allen-Bradley type 800T, or equal.

D. Indicating Light. Units shall meet the following:

1. Heavy-duty, oil-tight, push-to-test industrial type with integral transformer for 120V AC application.
2. Rated for NEMA 4 service.
3. Screwed on flat-faced lenses in colors shown on the drawings.
4. Factory-engraved legend plates.
5. Square D type K, Allen-Bradley Type 800T, or approved equal.

2.06 INTERNAL PANEL COMPONENTS

A. Control/Interposing Relays: All relays shall meet the following:

1. Compact, general-purpose, plug-in type.
2. Socket mounted.
3. Contacts rated for not less than 10 amperes at 120V.
4. Equipped with neon status lights and test buttons.
5. Permanent, legible identification
6. Potter & Brumfield series KRPA or approved equal.

B. Time Delay Relay. Time delay relays shall meet the following:

1. Available functions: On delay, Off delay, or one shot.
2. Socket mounted.
3. Knob adjustment.
4. Contacts rated for not less than 10 amperes at 120V.
5. Timing range as appropriate for the application.
6. Magnecraft series W211 or approved equal.
7. Adjustable 0-60 seconds

C. Terminal Blocks. Terminal blocks shall meet the following requirements:

1. Terminals capable of accepting 10-26 AWG wire.
2. DIN-rail mounting.

3. Connectors shall be either copper or steel. Use of aluminum connectors shall not be permitted without prior approval of the Engineer
4. Phoenix Contact or approved equal.

2.07 EXTERNAL PANEL COMPONENTS

A. Solar PV and Controller:

1. Provide Solar PV sized for adequate alternative power to DC circuit within RTU within the LSCP. Solartech or approved equal.

2. Provide Solar PV mounting bracket suitable for wind loads up to 150 MPH. Sunwise or approved equal.

3. Provide Solar controller , Moring Star (Sunsaver) or approved equal.

B. Alarm Light :

1. Red ,50 W, 120V , Edwards Signaling (125STRNR120A) or equal

C. Rain Gauge:

1. Provide Rain Gauge tipping bucket , 8" collector. Texas Electronics TR-525USW or approved equal

2.08 SPARES AND EXPENDABLES

A. Provide the following spare parts:

1. One spare d.c. power supply of each type provided.
2. Five spare relays of each type provided.
3. Two spare surge protection devices of each type provided.

B. Provide the following expendables:

1. Two year supply of corrosion inhibitor capsules
2. Ten spare fuses of each type and rating supplied.
3. Ten spare indicator light bulbs of each type and color supplied.

PART 3 EXECUTION

3.01 INSTALLATION

A. Control Panels shall be installed at the locations indicated on the Contract Drawings.

B. Control panels shall be provided to the mechanical subcontractor for installation.

C. Verify the correct installation of all panels supplied under this Specification Section.

END OF SECTION

SECTION 13330

PROCESS INSTRUMENTATION AND CONTROL SYSTEM

REMOTE TELEMETRY UNIT RTU

PART 1 - GENERAL

1.01. Scope of Work

A. The Specification Section defines requirements for RTU integrated into the Lift Station Control Panel (LSCP) for remotely located lift stations for City of Port Orange.

B. The RTU shall be furnished, programmed, installed and made fully operational by the SYSTEM SUPPLIER defined in Specification Section 13300.

C. The RTU hardware manufacturer shall be:

1. Hydra Service, Inc. – Hydralink System. No equal.

1.02. General Specifications

A. Basis of site communications shall be cellular utilizing the latest IoT (Internet of Things) hardware and service providers

B. All communications (router) hardware shall be off the shelf “non-proprietary” devices. Owners shall be able to utilize existing devices or purchase new devices not tied to a specific manufacturer. Secured internet connection is all that is required.

C. Owner shall acquire cellular data plan directly from IoT M2M providers. Manufacturers that resell data and require contracts for cellular service shall not be considered.

D. Owner shall own “on-premise” all software and hardware to communicate, display, historically log, and notify for alarms. No third-party servers, remote web servers, or remote callout will be acceptable.

E. Equipment must be compatible of communicating with standard HMI packages such as VT SCADA, IFix, Wonderware, etc.

F. All field units shall be interchangeable without the need for custom code

G. All field units shall be capable of communications site to site and shall allow any input at master site to control any output at any remote site(s).

H. System shall be a complete “ICT System” (install, configure, test) without the need for additional programming.

I. The communications system shall not require any Virtual Private Networks for site connectivity.

J. Customer shall have access to an escrow repository for all Hydralink source code in the event the product is no longer supported by the manufacturer.

1.03. Related Work

A. Specification Section 13300 defines general requirements for the Work.

B. Specification Section 13315 defines requirements for the control panels.

1.04. Submittals

A. Furnish the submittals in accordance with the related Specification Sections.

PART 2 - PRODUCTS

2.01. Hardware

A. Hydralink Pump Controller :

1. Unit shall be DIN rail mountable

2. On-site configuration, process viewing, and historical log viewing shall be accomplished via any VNC connection or Hydralink 5" / 7" touch screen display. Unit shall be fully functional without VNC or display after configuration is complete.

3. All inputs and outputs shall be fixed operation – all inputs that are not used can be added to SCADA HMI as spare.

4. Hardware shall have the following inputs and outputs:

a. Fourteen (14) sourced digital inputs (Pump 3 Inputs if not used are spare)

1) Pump Running (1-3)
2) Pump Seal Fail (1-3)
3) Pump In Auto (1-3)
4) Phase Loss
5) Battery Low
6) Generator Running
7) High Level Float
8) Redundant Control Active

b. Eight (8) relay outputs (configurable 2-5) functions below:

1) Pump Call (1-3)
2) Station Pump Cut
3) Alarm Active
4) Alarm buzzer Reset
5) Router power cycle

6) PLC power cycle
7) Redundant Control Reset

c. Two (2) 4-20mA analog inputs

1) Wetwell Level Transmitter
2) Pressure Transmitter (Force Main or Water)

d. Two (2) 4-20mA analog outputs

1) VFD Control
2) VFD Control

e. Two (2) ethernet ports

1) Router Internet connection
2) VNC or Display Connection

5. Hardware IO Expansion and Modbus Expansion

a. The unit shall have plug and play / Configuration Wizard selectable expansion IO

b. The unit shall have plug and play / Configuration Wizard selectable modbus communications to specific Modbus compatible phase monitors to read phase to phase or phase to Neutral voltages for each leg and read the fault code of the failure event (phase reversal, over, under, loss of leg, imbalance)

6. Graphics shall include the following selectable displays
   a. Submersible
   b. Smith and Loveless above grade
   c. IEEE grey scale
7. Upon initial deployment or reset to default, a wizard shall be available to configure the following operations:

a. Controller operation

1) Duplex/Triplex
2) Constant/Variable Speed control
3) Communications Type (None, Hydralink, Modbus)
4) Graphics type – Submersible, Smith and Loveless, or Greyscale

b. Ethernet Connection

c. Hydralink Communication

d. Site to Site control operations

8. The integrated pump controller shall function as follows:

a. Alternation between pumps for each cycle or timed (8, 12, or 24Hr)

b. Forced alternation in the event any currently running or called pump fails

c. Setpoints for all control and alarm operation when using a transducer

d. Setpoints for all control and alarm timers

e. Analog scaling blocks for both analog inputs and failure alarms

f. Software Auto/Off selector

g. Historical logging for all triggered alarms

h. Wet well level bar graph and control display shall include the following:

1) Scaled to actual wet well depth
2) Display each control setpoint level scaled to depth
3) Display lowest invert level scaled to depth
4) Display the actual wet well level scaled to depth
5) Indicate alarm when level is above or below setpoints
6) Level simulator with touch screen slider to test operations

9. Units shall have a HELP button relative to each configuration and operation screen.

10. Units shall be powered with 24VDC.

11. The unit shall be capable of communicating via cellular router utilizing Hydralink protocol. Any cellular router capable of passing internet traffic utilizing the owners SIM cards shall be compatible.

12. Communication updates shall be as follows:

a. Immediate (after debounce delay) for any status change – alarms, digital input (pump status), analog value

b. Time based for analog or digital status – in the event an update is not sent for a status change for “x” minutes the values are sent, max resolution for trending

c. Setpoint and configuration changes – sent on HMI or local changes only

d. Totalizers – sent once a day at “XXXX” time or when requested from HMI

13. Controller units shall be model Hydralink Control.

B. Monitoring Unit

1. Unit shall be DIN rail mountable.

2. On-site configuration, process viewing, and historical log viewing shall be accomplished via any VNC connection or Hydralink 5” / 7” touch screen display. Unit shall be fully functional without VNC or display after configuration is complete.

3. All inputs and outputs shall be dynamically configurable.

4. Hardware shall have the following inputs and outputs:

   a. Ten (10) sourced digital inputs shall be configurable as follows:

      1) Choice of 20 labels – name of input
      2) Selectable for Alarm, RTM, Counter with time delay
      3) Control any output if state is true
      4) Operator notes available to allow description of operation

   b. Eight (8) relay outputs shall be controllable from any configured input

   c. Two (2) analog inputs shall be configurable as follows:

      1) Choice of 15 labels – name of input
      2) Selectable for Alarm, Totalizer with time delays
      3) Three control/alarm setpoints – (High, Low, and Signal Fail)
      4) Control any output with (High, Low, or Signal Fail)
      5) Totalizer selectable for Gallons, KGallons, or MGD
      6) Scaling and decimal setpoints

   d. Two (2) ethernet ports:

      1) Router internet connection
      2) VNC or display connection

5. Configuration screens shall be available for the following:

   a. Hydralink Communications

   b. Site to Site Configuration

   c. Password protection

   d. Input / Output configuration

6. Units shall have a HELP button relative to each configuration and operation screen.

7. Units shall be powered with 24VDC.

8. The unit shall be capable of communicating via cellular router utilizing Hydralink protocol. Any cellular router capable of passing internet traffic utilizing the owners SIM cards shall be compatible.

9. Communications updates shall be as follows:

    a. Immediate (after debounce delay) for any status change – alarms, digital input, analog value

    b. Time based for analog or digital status – in the event an update is not sent for a status change for "x" minutes the values are sent, max resolution for trending

    c. Setpoint and configuration changes – sent on HMI or local changes only

    d. Totalizers – sent once a day at "XXXX" time or when requested from HMI

    e. Monitoring units shall be model Hydralink Monitor.

C. General Information for the Control and Monitoring Unit

1. Power Supply 20.4 – 28.8 VDC

2. 0.46A @ 24VDC

3. IP20 / NEMA 1 Housing

4. -20 to 55 C Deg. Operation Temperature

5. 5 to 95 % Non-Condensing Relative Humidity

PART 3 - EXECUTION

3.01. LIFT STATIONS SCADA and OIT Programming

A. In the descriptions which follow the term operator adjustable mean via the OIT and SCADA graphic screens.

B. Provide SCADA and OIT graphic screens that show process equipment that replicates the actual equipment and meets the graphic color standards used for the City's SCADA system.

C. Station Overview. This graphic shall include the following information:

1. Current wet well level in text.

2. Status of each pump as follows:

a. Running, Stopped, Failed by symbol color.

b. Hand/Off/Auto hardware and software switch positions in text.

c. Current Lead/Lag/Standby in text.

d. Current Speed Set-Point and Speed in text.

D. Current discharge pressure and flow in text.

E. Current potable water pressure and flow in text.

F. Provide a Power Monitoring screen that indicates in text the following:

1. Bypass Pump status

2. A table of current Voltage Monitor values.

G. Provide separate graphics or pop-up screens for all operator adjustable parameters and controls.

H. Provide past 30 day graphical trend of the following signals:

1. Wet Well Level.

2. Discharge Pressure.

3. Water Pressure

4. Pump Running.

5. Pump Speed

6. Bypass Pump Running.

7. Bypass Fuel Tank Level.

3.02. LIFT STATIONSRTU Control Strategies

A. All PLC programming shall be performed using Rockwell Studio 5000 Designer professional configuration and programming software.

B. In the descriptions which follow the term operator adjustable mean via the OIT and SCADA graphic screens.

C. Pumping. The intent of this strategy is to provide consistent wet well level. The strategy will require the RTU to know if the wet well level is increasing or falling. Provide a LEAD/LAG/STANDBY sequence for the pumps that automatically rotates every 7 days at midnight. Allow the operator to override the auto sequencing and manually set the sequence. In auto, omit from the sequence any

pump that is not controllable by the RTU (i.e., not in auto or failed). Proceed as follows:

1. Provide the following operator adjustable parameters:

   a. LS1 – Lead Pump setpoint level.

   b. LS2 – Lag Pump setpoint level above LS1.

   c. MIN – Minimum VFD Speed.

2. The PID will calculate on a continuous basis dependent on the wet well level.

3. Start the LEAD pump when placed in AUTO . VFD shall start at MAX speed for an adjustable delay then vary speed based on PID output calculated by LS1.

4. Start the LAG pump when placed in AUTO and LEAD pump VFD is at MAX speed for an operator adjustable delay.

5. Start the LAG pump when placed in AUTO and wet well level is higher than LS2 for an operator adjustable delay.

6. When staging up to the LAG pump, place the PID in MANUAL and set the PID output to 90% (adjustable via the HMI), then return the PID to AUTO.

7. Stop the LAG pump if VFD is at MIN speed for an operator adjustable delay.

8. If the wet well level transmitter fails or goes out of range, AUTO pumping by the PLC shall cease and pump control shall transfer to the Backup Control Panel.

D. Rainfall Monitoring. Accumulate a daily total rainfall updated by rain gauge tips. At midnight transfer the total to yesterday's total and restart accumulation.

3.03. SCADA Programming.

A. All graphics shall meet the standards defined in the specifications herein.

B. Provide OIT graphic screens for each RTU that illustrate all station parameters and equipment status, Provide pop-up windows as required to allow operators to modify setpoints or HMI control of equipment.

C. Replicate the OIT graphics on HMI.

D. Also provide a lift station overview screen on HMI depicting the geographical location of the WWTP and all lift stations. Each location shall be indicated with a circle colored to indicate status as follows:

1. Green – operating normally.

2. Red – communications loss.

3. Yellow flashing – unacknowledged station alarm.

4. Yellow – acknowledged but not yet cleared station alarm.

3.04. Training

A. Provide one day of hardware training for up to two Owner personnel on the maintenance and use of the hardware.

B. Provide one day of operator training for up to four Owner personnel on the use of the graphics.

3.05. RTU Inputs/Outputs

A. The required RTU inputs and outputs are listed in the Table below. At each lift station, disable unused signals within the Controller.

Tag Number		Description	Type
LS-A	0**0	Call LEAD Pump Level	DI
LS-B	0**0	Call LAG1 Pump Level	DI
LS-C	0**0	Call LAG2 Pump Level	DI
LSHH	0**0	High Level	DI
LSL	0**0	Stop Pumping Level	DI
LSLL	0**0	Low level	DI
LT	0**0	Level	AI
HS	0**1	Pump 1 In Remote	DI
MC	0**1	Pump 1 Control	DO
RS	0**1	Pump 1 Running	DI
SC	0**1	Pump 1 Speed Control	AO
ST	0**1	Pump 1 Speed	AI
SI	0**1	Pump 1 Current	AI
XS	0**1	Pump 1 Fault	DI
HS	0**2	Pump 2 In Remote	DI
MC	0**2	Pump 2 Control	DO
RS	0**2	Pump 2 Running	DI
SC	0**2	Pump 2 Speed Control	AO
ST	0**2	Pump 2 Speed	AI
SI	0**2	Pump 2 Current	AI
XS	0**2	Pump 2 Fault	DI
HS	0**3	Pump 3 In Remote	DI
MC	0**3	Pump 3 Control	DO
RS	0**3	Pump 3 Running	DI
SC	0**3	Pump 3 Speed Control	AO
ST	0**3	Pump 3 Speed	AI
SI	0**3	Pump 3 Current	AI
XS	0**3	Pump 3 Fault	DI

Tag Number		Description	Type
PT	0**5	Discharge Pressure	AI
FT	0**6	Discharge Flow	AI
YS	0**8	RTU Intrusion	DI
ESL	0**9	Low UPS Battery	DI
XS	0**9	Power Loss	DI
PT	0*10	Water Pressure	AI
LT	0*11	Bypass Pump Fuel Level	AI

END OF SECTION

SECTION 15075

CONNECTIONS BETWEEN DISSIMILAR MATERIALS

PART 1 - GENERAL

1.01 DESCRIPTION

A. This section includes materials and installation of connections used to join pipes and fittings made of dissimilar materials.

1.02 SUBMITTALS

A. Submit shop drawings in accordance with the General Conditions.

PART 2 - MATERIALS

2.01 GENERAL

A. All pipe-to-pipe and pipe-to-fitting connections involving dissimilar materials shall be made using mechanical joint type connectors.

2.02 DUCTILE IRON TO PVC CONNECTIONS

A. Connections between ductile iron pipe or fittings and PVC pipe or fittings shall use ductile iron mechanical joint glands conforming to AWWA C111 and AWWA C153. Gaskets, bolts and hexagonal nuts shall be standard rubber gaskets conforming to AWWA C111. Follower gland shall match class 350 “compact” fittings.

2.03 DUCTILE IRON TO HDPE CONNECTIONS

A. Connections between ductile iron pipe or fittings and HDPE pipe or fittings shall use ductile iron mechanical joint glands conforming to AWWA C111 and AWWA C153. Mechanical joints shall be fully thrust restrained. Gaskets, bolts and hexagonal nuts shall be standard rubber gaskets conforming to AWWA C111. Follower gland shall match class 350 “compact” fittings.

B. HDPE pipe stiffeners shall be constructed of stainless steel and shall be flanged on one end to prevent over insertion into the receiving pipe.

2.04 PVC TO HDPE CONNECTIONS

A. The joining end of the HDPE pipe shall have a butt-fused flange piece attached in accordance with manufacturer’s recommendations.

B. Connection to PVC shall use a fully restrained ductile iron mechanical joint conforming to the requirements of AWWA C111 and C153.

PART 3 - EXECUTION

3.01 DUCTILE IRON TO PVC OR HDPE

A. Install mechanical joints in accordance with AWWA C600 and manufacturer’s recommendations.

B. When connection is being made to HDPE pipe or fitting, insert pipe stiffener into connection end of HDPE pipe until flared end seats against cut face.

3.02 PVC TO HDPE

A. Butt-fuse flange end piece to connection end of HDPE pipe in accordance with manufacturer’s recommendation.

B. Install fully restrained mechanical joint on PVC connection end in accordance with AWWA C600 and manufacturer’s recommendation.

END OF SECTION

SECTION 15100

VALVES AND OPERATORS

PART 1 - GENERAL

1.01 DESCRIPTION

A. This section includes materials, testing, and installation of valves and valve operators.

1.02 SUBMITTALS

A. Submit shop drawings in accordance with the General Conditions.

B. Submit manufacturer's catalog data and detail construction sheets showing all valve parts. Describe each part by material of construction, specification (such as AISI, ASTM, SAE, or CDA), and grade or type.

C. Show valve dimensions including laying lengths. Show port sizes. Show dimensions and orientation of valve actuators, as installed on the valves. Show location of internal stops for gear actuators. State differential pressure and fluid velocity used to size actuators. For worm gear actuators, state the radius of the gear sector in contact with the worm and state the handwheel diameter.

D. Show valve linings and coatings. Submit manufacturer's catalog data and descriptive literature.

E. Submit six copies of a report verifying that the valve interior linings and exterior coatings have been tested for holidays and lining thickness. Describe test results and repair procedures for each valve. Do not ship valves to project site until the reports have been returned by the OWNER'S REPRESENTATIVE and marked "Resubmittal not required."

F. For butterfly valves, show the clear diameter or size of the port. Show the actual area of the port as a percentage of the area as calculated for the nominal valve size.

PART 2 - MATERIALS

2.01 GENERAL

A. Install valves complete with operating nuts and wrenches required for operation.

B. Valves shall have the name of the manufacturer and the size of the valve cast or molded onto the valve body or bonnet or shown on a permanently attached plate.

C. For buried locations, valves with mechanical joint ends may be substituted for the flanged ends specified provided the mechanical joint ends are compatible with the pipe ends.

2.02 VALVE ACTUATORS

A. Provide 2-inch AWWA operating nuts for buried valves.

B. For buried or submerged service, provide watertight shaft seals and watertight valve and actuator cover gaskets. Provide totally enclosed actuators designed for buried or submerged service.

C. Valve actuators, handwheels, or levers shall open by turning counterclockwise.

2.03 VALVE BOXES FOR BURIED VALVES

A. Valve boxes shall be of the cast iron slip or sliding type with a 5-1/4" shaft extension. Tops and bottoms of valve boxes shall be cast iron. 5-1/4" drop lid shall bear the marking "Port Orange Wastewater" and weigh 13 pounds minimum. Acceptable manufacturers are Opelinka Foundry, Russell Pipe & Foundry, Tyler Pipe, and Star Pipe.

2.04 EXTENSION STEMS FOR BURIED AND SUBMERGED VALVE ACTUATORS

A. Where the depth of the valve is such that its centerline is more than 4 feet below grade, provide operating extension stems to bring the operating nut to a point 6 inches below the surface of the ground and/or box cover. Where the valve is submerged, provide operating extension stems to bring the operating nut to 6 inches above the water surface. Extension stems shall be Type 316 stainless steel, solid core, and shall be complete with 2-inch-square operating nut. The connections of the extension stems to the operating nuts and to the valves shall withstand without damage a pull of 300 foot- pounds.

B. Extension stem diameters shall be as tabulated below:

Valve Size (inches)	Minimum Extension Stem Diameter (inches)
2	3/4
3, 4	7/8
6	1
8	1-1/8
10, 12	1-1/4
14	1-3/8
16, 18	1-1/2
20, 24, 30	1-3/4

2.05 PAINTING AND COATING

A. The interior areas of the cast iron valve bodies shall be provided with a two-part thermosetting epoxy protective coating, minimum 4 mils, and shall function as a physical, chemical, and electrical barrier between the base metal to which it is applied and the surrounding medium. The coating shall be non-toxic and shall not impart taste to the water. The coating shall have a successful record of performance in valves, pipe and other allied equipment.

2.06 PACKING, O-RINGS, AND GASKETS

A. Unless otherwise stated in the detailed valve specifications, packing, O-rings, and gaskets shall be one of the following nonasbestos materials:

1. Teflon.

2. Kevlar aramid fiber.

3. Acrylic or aramid fiber bound by nitrile. Products: Garlock "Bluegard," Klinger "Klingersil C4400," or equal.

4. EPDM.

2.07 RUBBER SEATS

A. Rubber seats shall be made of a rubber compound that is resistant to free chlorine and chloramine concentrations up to 10 mg/l in the fluid conveyed.

2.08 VALVES

A. Gate Valves:

1. Resilient Seat Gate Valves:

a. All resilient seat gate valves shall as a minimum conform to AWWA Standard C509 and latest revisions thereto. The resilient seat gate valve body and bonnet shall be made of

Class B grey iron meeting ASTM 126 and shall be provided with mechanical joint ends complete with accessories and suitable for 200 PSI working pressure. Test pressure shall be twice the rated working pressure and at all times zero leakage will be maintained. The dual sealing mechanism must be a replaceable reinforced specially contoured molded runner wedge or disc. Valve stem seals will be "O" ring.

b. Resilient seat gate valves are to operate in a vertical position, shall open left (counterclockwise) with non-rising stem and have a 2-inch square operating nut. Accessories for the mechanical joint ends shall include rubber gaskets with glands, COR-TEN bolts and nuts packaged in the proper manner to accommodate each individual (M.J.) valve end.

c. Acceptable manufacturers are American AVK Co., Clow, Mueller, American Flow Control, or equal.

2. Tapping Gate Valves 4 inches through 12 inches

a. Four inch through twelve inch tapping valves shall be Class 250 resilient seat conforming to AWWA C509 and the latest revisions thereto. The valves shall have a mechanical joint end and a tapping valve end. They must operate in the vertical position, open left or counterclockwise with a non-rising stem and a 2-inch square operating nut.

b. Acceptable manufacturers are American AVK Co., Clow, Mueller, American Flow Control, or equal.

3. Tapping Gate Valves 14 Through 24 Inches:

a. Valves shall conform to AWWA C500 and the following. Valves shall be iron bodied, solid bronze internal working parts, parallel faced, bottom wedging double-discs, and O-ring seals. Discs shall either be solid bronze or shall be cast iron with bronze facings. The minimum designated water working pressure shall be 200 psi. Bronze for internal working parts, including stems, shall not contain more than 2% aluminum nor more than 7% zinc. Bronze shall conform to ASTM B 62 or ASTM B 584 (Alloy C83600), except that stem bronze shall have a minimum tensile strength of 60,000 psi, a minimum yield strength of 30,000 psi, and a minimum of 10% elongation in 2 inches (ASTM B 584, Alloy C87600). Body bolts shall be Type 316 stainless steel, ASTM A 276. Ends shall be flanged, Class 125, ANSI B16.1. One end shall have slotted bolt holes to fit tapping machines. Seat rings shall be oversized to permit the use of full-size cutter. The exterior and interior of the cast iron valve shall be lined with a thermosetting epoxy protective coating, minimum 4 inch. Valves shall be American AVK Co., Clow, Mueller, American Flow Control, or equal.

B. Butterfly Valves:

1. All butterfly vales shall as a minimum be manufactured to conform to ANSI/AWWA C504-94 and the latest revisions thereto. The body, disc, shaft seats, bearings, and actuators shall be designed based on Class 150B valves and may be of either the short or long body type. All valves must have a minimum of 4 mil factory applied thermosetting (epoxy coating) on all internal ferrous surfaces. Coatings must meet all FDS and government regulations. The valves shall have mechanical joint ends with accessories.

2. The valve disc shall be corrosion-resistant alloy, cast iron or ductile iron and shall be pressure sealed to the stainless shaft. The shaft seals shall be of the "Split-V," "Chevron," or "O" Ring for buried service. The shaft may be of the through type or the stub type and shall be marked on the end to indicate the position of the valve disc in relation to the shaft. It shall be equipped with a (2) two-inch square operating nut.

3. The valve seat shall be made of rubber and may be located either in the body of the valve or

in the disc. Rubber seats located in the body of the valve shall be encapsulated on three sides within the body. If the valve has the rubber seat in the disc, the valve must have a floating “O” ring under the seat ring, on butterfly valves 24” or larger the seat shall be adjustable and replaceable in the field.

4. The actuator shall open left (counterclockwise) and shall be of the travel nut type. The actuator housing shall be removable under pressure to facilitate repair or replacement. The actuator shall be capable of handling 450-foot pounds of torque at the stops without damage. Acceptable manufacturers are American-Darling Valve, BIF, Clow Valve, Henry Pratt, Kennedy Valve, M&H Valve, Mueller and Waterous.

PART 3 - EXECUTION

3.01 JOINTS

A. Bolt holes of flanged valves shall straddle the horizontal and vertical centerlines of the pipe run to which the valves are attached. Clean flanges by wire brushing before installing flanged valves. Clean flange bolts and nuts by wire brushing, lubricate threads with oil and graphite, and tighten nuts uniformly and progressively. If flanges leak under pressure testing, loosen or remove the nuts and bolts, reseat or replace the gasket, reinstall or retighten the bolts and nuts, and retest the joints. Joints shall be watertight.

B. Clean threaded joints by wire brushing or swabbing. Apply Teflon joint compound or Teflon tape to pipe threads before installing threaded valves. Joints shall be watertight.

3.02 INSTALLING BURIED VALVES

A. Connect the valve and place and compact the backfill to the height of the valve stem.

B. Place block pads under the extension pipe to maintain the valve box vertical during backfilling and repaving and to prevent the extension pipe from contacting the valve bonnet.

C. Mount the upper slip pipe of the extension in midposition and secure with backfill around the extension pipe. Pour the concrete ring allowing a depression so the valve box cap will be flush with the pavement surface.

D. In streets without concrete curbs and in open areas, install the valve box as for a paved area with concrete curb except include a marker post. Cut the marker post from 4 x 4" dense structural grade redwood or Southern Pine surfaced on four sides to a length of 5 feet. Chamfer the top. Set the post in concrete, 2 feet into the ground, away from traffic, and to the side of the pipeline. Coat with a seal and finish coat of white alkyd exterior paint. On the side facing the valve, letter in black the word "VALVE" and the distance in feet from the marker post to the valve box cap.

3.03 VALVE LEAKAGE TESTING

A. Test valves for leakage at the same time that the connecting pipelines are tested. See Section 02684 for pressure testing requirements. Protect or isolate any parts of valves, actuators, or control and instrumentation systems whose pressure rating is less than the pressure test. Valves shall show zero leakage. Repair or replace any leaking valves and retest.

3.04 VALVE FIELD TESTING

A. Operate manual valves through three full cycles of opening and closing. Valves shall operate from full open to full close without sticking or binding. Do not backfill buried valves until after verifying that valves operate from full open to full closed. If valves stick or bind, or do not operate from full open to full closed, repair or replace the valve and repeat the tests.

3.05 AS-BUILT LOCATION

A. All valves, bends, fittings, and dead ends shall be referenced with at least two measurements taken from permanent structures such as building corners (identified by address), curbs, edge of

pavement, centerlines of streets or driveways (by address), or manholes. Contractor shall select the permanent structures in accordance with Port Orange's standard method of referencing. Contractor shall meet with Port Orange staff to discuss and understand Port Orange's standard method prior to performing the fieldwork.

B. Furnish and install 4" x 4" x 2'0" long concrete survey monument at locations directed by Owner. Set monument an inch above grade and paint blue.

END OF SECTION

PAGE INTENTIONALLY LEFT BLANK

SECTION 15905

SUBMERSIBLE PUMPS

PART 1 - GENERAL

1.01 SCOPE

A. Furnish and install (2) premium efficiency, non-clog, submersible sewage pumps. The pumps shall be Sulzer XFP80C-CB1.4-PE35, or engineer pre-approved equal meeting the detailed requirements of this section without exception. The pumps shall be capable of meeting all performance criteria as specified in this section. The motor shall be an integral part of the pump unit and shall be rated at 4.69 hp, 1751 RPM, connected for operation on a 230 volt, 3 phase, 60 hertz electrical supply service. Each pump motor shall be equipped with 49 feet of power and control cable sized in accordance with NEC and CSA standards. Each pump shall be supplied with a stainless steel guide rail system with a 6 inch discharge elbow. Each pump unit shall be fitted with an appropriately sized lifting cable assembly. The working load rating of the lifting system shall be a minimum of 50% greater than the pump weight.

B. The heavy-duty submersible wastewater pumps shall be capable of handling raw unscreened sewage, storm water, and other similar solids-laden fluids without clogging. The pump shall be driven by a premium efficiency motor, providing the highest levels of operational reliability and energy efficiency.

PART 2 - PRODUCTS

2.01 SUBMERSIBLE PUMP CONSTRUCTION

A. Major pump components shall be of gray cast iron, EN-GJL-250 (ASTM A-48, Class 35B) with smooth surfaces devoid of porosity or other irregularities. All exposed fasteners shall be of stainless steel, 1.4401 (AISI 316). All metal surfaces coming into contact with the pumped media (other than the stainless steel components) shall be protected by a factory applied spray coating of zinc phosphate primer followed by a high solids two-part epoxy paint finish on the exterior of the pump. The pump shall be equipped with an open lifting hoop suitable for attachment of standard chain fittings. The hoop shall be of stainless steel, 1.4401 (AISI 316), and shall be rated to lift a minimum of four times the pump weight.

B. Sealing design for the pump/motor assembly shall incorporate machined surfaces fitted with Nitrile (Buna-N) rubber O-rings. Sealing will be the result of controlled compression of rubber O-rings in two planes of the sealing interface. Housing interfaces shall meet with metal-to-metal contact between machined surfaces, and sealing shall be accomplished without requiring a specific torque on the securing fasteners. Rectangular cross sectioned gaskets requiring specific torque limits to achieve compression shall not be considered equal. No secondary sealing compounds shall be required or used.

2.02 WET END

A. Impeller:

1. The Sulzer Contrablock Plus impeller shall be of gray cast iron, EN-GJL-250 (ASTM A-48, Class 35B). The impeller shall be of the semi-open, non-clogging, single-vane design, meeting the Ten State Standards requirement for minimum solids passage size of 3 inches. Impellers which have a thrulet of less than 3” will not be acceptable. The impeller shall have a slip fit connection onto the motor shaft, driven by a shaft key, and shall be securely fastened to the shaft by a stainless steel screw. A positively engaged, ratcheting washer assembly shall prevent the screw from loosening. The head of the impeller screw shall be effectively recessed within the impeller bore to prevent disruption of the flow stream and loss of hydraulic efficiency. The impeller shall be dynamically balanced to the ISO 10816 standard to provide smooth, vibration-free operation. Impeller designs which do not meet the Ten State Standards

requirement for 3 inch solids passage size, those that rely on retractable impeller designs to pass 3 inch solids, or those that rely on fins or pins protruding into the suction path to assist in the handling of fibrous material shall not be considered equal.

B. Self-Cleaning Wear Plate:

1. The Sulzer Contrablock Plus wear plate shall be of gray cast iron, EN-GJL-250 (ASTM A-48, Class 35B). The wear plate shall be designed with an inlet incorporating strategically placed cutting grooves as well as an outward spiral V-shaped groove on the side facing the impeller. The dual groove system shall be used to shred and force stringy solids outward from the impeller and through the pump discharge. The wear plate shall be mounted to the volute with four stainless steel securing screws and four stainless steel adjusting screws to permit close tolerance adjustment between the wear plate and impeller for maximum pump efficiency. Adjustment to allow for wear and restore peak pumping performance shall then be accomplished using standard tools, and without requiring disassembly of the pump. The use of fixed or non-adjustable wear plates or rings, systems that require disassembly of the pump, or shimming of the impeller to facilitate adjustment, shall not be considered equal. The suction flange shall be integrated into the wear plate and its bolt holes shall be drilled and tapped to accept standard 6 inch ANSI class 125/150 flanged fittings.

C. Pump Volute:

1. The pump volute shall be a single-piece, gray cast iron, EN-GJL-250 (ASTM A-48, Class 35B), non-concentric design with centerline discharge. Passages shall be smooth and large enough to pass any solids which may enter through the impeller. The discharge size shall be 6 inches. The discharge flange design shall permit attachment to standard ANSI and DIN flanges/appurtenances. The discharge flange shall be radially slotted to accept both 6 inch ANSI class 125/150 and metric DN150 flanged fittings. Proprietary or nonstandard flange dimensions shall not be considered acceptable. The minimum working pressure of the volute and pump assembly shall be 16 bar (232 psi).

2.03 PREMIUM EFFICIENCY MOTOR

A. The premium efficiency motor shall meet efficiency standards in accordance with IEC 60034-30:2008, level IE3 and NEMA Premium. The motor shall meet all the performance criteria specified in this section

B. The motor shall be housed in a water-tight gray cast iron, EN-GJL-250 (ASTM A-48, Class 35B), enclosure, capable of continuous submerged operation underwater to a depth of 20 meters (65 feet) and shall have an IP68 protection rating. The motor shall be of the squirrel-cage induction design, NEMA type B. The copper stator windings shall be insulated with moisture resistant, Class H insulation material, rated for 180°C (356°F). The stator shall be press fitted into the stator housing. The use of bolts, pins, or other fastening devices requiring penetration of the stator housing is unacceptable. The rotor bars and short circuit rings shall be made of cast aluminum.

C. The motor shall be designed for continuous duty. The maximum continuous temperature of the pumped liquid shall be 40°C (104°F), and intermittently up to 50°C (122°F). The motor shall be capable of handling up to 15 evenly spaced starts per hour without overheating. The service factor (as defined by the NEMA MG1 standard) shall be 1.3. The motor shall have a voltage tolerance of +/- 10% from nominal, and a phase-to-phase voltage imbalance tolerance of 1%. The motor shall have a NEMA Class A temperature rise, providing cool operation under all operating conditions. The motor shall be FM approved for use in NEC Class I, Division I, Groups C & D hazardous locations. The surface temperature rating shall be T3C. The motor shall meet the requirements of NEMA MG1 Part 30 and 31 for operation on PWM type Variable Frequency Drives.

D. The factory installed closed-loop cooling system shall be of gray cast iron, EN-GJL-250 (ASTM A-48, Class 35B), adequately designed to allow the motor to run continuously under full load while

in an unsubmerged or minimally submerged condition without the need for de-rating or reduced duty cycle. A cooling jacket shall surround the stator housing, and an environmentally safe nontoxic propylene glycol solution shall be circulated through the jacket by an axial flow circulating impeller attached to the main motor shaft. The coolant shall be pumped through an integrated heat exchanger in the base of the motor whenever the motor is running, allowing excess heat to be transferred to the process liquid. Cooling systems that circulate the pumped medium through the cooling jacket, or those that use a toxic cooling liquid shall not be acceptable. The use of external heat exchangers, fans, or the supply of supplemental cooling liquid shall not be required.

E. Thermal Protection:

1. Each phase of the motor shall contain a normally closed bi-metallic temperature monitor switch imbedded in the motor windings. These thermal switches shall be connected in series and set to open at 140°C +/- 5°C (284°F). They shall be connected to the control panel to provide a high stator temperature shutdown signal, and are used in conjunction with external motor overload protection.

F. Mechanical Seals:

1. Each pump shall be equipped with a tandem mechanical shaft seal system consisting of two totally independent seal assemblies. The seals shall operate in a lubricant reservoir that hydro-dynamically lubricates the lapped seal faces at a constant rate. The lower, primary seal unit, located between the pump and the lubricant chamber, shall contain one stationary industrial duty silicon-carbide seal ring and one rotating industrial duty silicon-carbide seal ring. The stationary ring of the primary seal shall be installed in a seal holding plate of gray cast iron, EN-GJL-250 (ASTM A-48, Class 35B). The seal holding plate shall be equipped with swirl disruption ribs to prevent abrasive material from prematurely wearing the seal plate. The upper, secondary seal unit, located between the lubricant chamber and motor housing, shall contain one stationary industrial duty silicon-carbide seal ring, and one rotating industrial duty silicon-carbide seal ring. Each seal interface shall be held in contact by its own spring system. The seals shall not require routine maintenance or adjustment, and shall not be dependent on the direction of rotation for proper sealing. Each pump shall be provided with a lubricant chamber for the shaft sealing system which shall provide superior heat transfer and maximum seal cooling. The lubricant chamber shall be designed to prevent overfilling, and to provide lubricant expansion capacity. The drain and inspection plug shall have a positive anti-leak seal and shall be easily accessible from the outside of the pump. The seal system shall not rely upon the pumped media for lubrication and shall not be damaged when the pump is run dry. Lubricant in the chamber shall be environmentally safe nontoxic material.

G. The following seal types shall not be considered equal: Seals of proprietary design or seals manufactured by other than major independent seal manufacturing companies. Seals requiring set screws, pins, or other mechanical locking devices to hold the seal in place, conventional double mechanical seals containing either a common single or double spring acting between the upper and lower seal faces, or any system requiring a pressure differential to seat the seal and ensure sealing.

H. Mechanical Seal Protection System:

1. The primary mechanical seal shall be protected from interference by particles in the wastewater, including fibrous materials, by an active Seal Protection System integrated into the impeller. The back side of the impeller shall be equipped with a sinusoidal cutting ring, forming a close clearance cutting system with the lower submersible motor housing or seal plate. This sinusoidal cutting ring shall spin with the pump impeller providing a minimum of 75 shearing actions per pump revolution. Large particles or fibrous material which attempt to lodge behind the impeller or wrap around the mechanical seal, shall be effectively sheared by the active cutting system into particles small enough to prevent interference with the mechanical seal. The Seal Protection System shall operate whenever the pump operates, and

shall not require adjustment or maintenance in order to function. Submersible pump designs which do not incorporate an active cutting system to protect the primary mechanical seal shall not be considered acceptable for wastewater service.

I. Shaft:

1. The pump shaft and motor shaft shall be an integral, one piece unit adequately designed to meet the maximum torque required at any normal start-up condition or operating point in the system. The shaft shall have a full shutoff head design safety factor of 1.7, and the maximum shaft deflection shall not exceed .05 mm (.002 inch) at the lower seal during normal pump operation. Each shaft shall be of stainless steel, 1.4021 (AISI 420), and shall have a polished finish with accurately machined shoulders to accommodate bearings, seals, and impeller. Carbon steel, chrome plated, or multi-piece welded shafts shall not be considered adequate or equal.

J. Bearings:

1. Each pump shaft shall rotate on high quality, permanently lubricated, greased bearings. The upper bearing shall be a deep grooved ball bearing and the lower bearings shall be a heavy duty, double row, angular contact ball bearing. Bearings shall be of sufficient size and properly spaced to transfer all radial and axial loads to the pump housing and minimize shaft deflection. L-10 bearing life shall be a minimum of 100,000 hours at flows ranging from ½ of BEP flow to 1½ times BEP flow (BEP is best efficiency point). The bearings shall be manufactured by a major internationally known manufacturer of high quality bearings, and shall be stamped with the manufacturer's name and size designation on the race. Generic or unbranded bearings from other than major bearing manufacturers shall not be considered acceptable.

K. Power Cable:

1. The power cables shall be sized according to NEC and CSA standards and shall be of sufficient length to reach the junction box without requiring splices. The outer jacket of the cable shall be of chlorinated polyethylene (CPE) and be oil, water, and UV resistant, capable of continuous submerged operation underwater to a depth of 65 feet.

L. Cable Entry/Junction Chamber:

1. The cable entry design shall not require a specific torque to insure a watertight seal. The cable entry shall consist of cylindrical elastomer grommets, flanked by stainless steel washers. A cable cap incorporating a strain relief and bend radius limiter shall mount to the cable entry boss, compressing the grommet ID to the cable while the grommet OD seals against the bore of the cable entry. The junction chamber shall be isolated and sealed from the motor by means of sealing glands. Electrical connections between the power cables and motor leads shall be made via a compression or post type terminal board, allowing for easy disconnection and maintenance.

2.04 ACCESSORIES:

A. Guide Rail Base Assembly:

1. There shall be no need for personnel to enter the wet well to remove or reinstall the pumps. The discharge base & elbow assembly shall be permanently installed in the wet well and connected to the discharge piping. In order to prevent binding or separation of the pump from the guide rail system, the pumps shall connect to the guide rail base automatically and firmly, each guided by two 2-inch diameter guide rails extending from the base elbow to the top of the station. Systems using guide cable in lieu of rigid guide bars or pipes shall not be considered acceptable. The sliding guide bracket shall be a separate part of the pumping unit, capable of being attached to standard pump flanges, so that the pump mounting is nonproprietary, and any pump with a standard discharge flange can be mounted on the base assembly. Base or

bracket assemblies with proprietary or nonstandard flange dimensions shall not be considered acceptable.

B. A field replaceable Nitrile (Buna-N) rubber profile gasket or O-ring shall accomplish positive sealing of the pump flange/guide rail bracket to the discharge elbow. Base assemblies which rely solely on metal-to-metal contact between the pump flange and discharge base elbow as a means of sealing are inherently leak prone, and shall not be considered equal. No portion of the pump shall bear directly on the floor of the sump.

2.05 SPARE PARTS

A. The following spare parts shall be supplied:

1. One spare impeller for each pump.

2. One spare wear plate for each pump.

2.06 PUMP DATA TABLE

Service	Raw Sewage
Number of Pumps Required	2
Motor Rating	4.69 HP, 230v
Maximum Nominal Speed	1730 RPM
Minimum Motor Efficiency at Full Load	89.53%
Minimum Shutoff Head	109 Feet
Flow Rate at Primary Duty Point	240 GPM
TDH at Primary Duty Point	36.11 Feet
Min Hydraulic Efficiency at Primary Duty Point	59.5%
Flow Rate at Runout Condition	340 GPM
TDH at Runout Condition	31.47 Feet
Maximum NPSHR at Runout Condition	8 Feet
Minimum Pump Discharge Size	6 inches ANSI

PART 3 - EXECUTION (NOT USED)

END OF SECTION

PAGE INTENTIONALLY LEFT BLANK

SECTION 16050
ELECTRICAL - GENERAL PROVISIONS

PART 1 - GENERAL

1.1 SCOPE OF WORK

A. Furnish all labor, materials, equipment and incidentals required for a complete electrical system at Lowe's Lift Station for the City of Port Orange, Florida, hereinafter specified and shown on the Drawings.

B. The work, apparatus and materials which shall be furnished under these Specifications and accompanying Drawings shall include all items listed hereinafter and/or shown on the Drawings. Certain equipment will be furnished as specified in other sections of these Specifications which will require wiring thereto and/or complete installation as indicated. All materials necessary for the complete installation shall be furnished and installed by the Contractor to provide complete power, lighting, communication systems, instrumentation, wiring and control systems as indicated on the Drawings and/or as specified herein.

C. The Contractor shall furnish and install the necessary switchgear, cables, transformers, motor control centers, generators, protective devices, conductors, exterior electrical system, etc., to serve motor loads, lighting loads and miscellaneous electrical loads as indicated on the Drawings and/or as specified hereinafter.

D. The work shall include complete testing of all equipment and wiring at the completion of the work and making any minor connection changes or adjustments necessary for the proper functioning of the system and equipment. All workmanship shall be of the highest quality; sub-standard work will be rejected.

E. It is the intent of the contract documents that the Contractor will have the ultimate responsibility for the coordination of the Division 11, 13, 15 and Division 16 systems.

F. Mount and wire speed indicators, variable frequency drives, reduced voltage sort starters, and process instruments furnished under other Divisions of these Specifications.

G. Mount and wire isolation transformers, operator's stations, and power conversion equipment for all variable speed drive systems furnished under other Divisions of these specifications.

H. Make all field connections to process instrument panels and other control panels furnished under other Divisions of these Specifications.

I. For process instrumentation, furnish and install all conduit, wire and interconnections between primary elements, transmitters, local indicators and receivers.

J. Furnish necessary devices and make connections to provide power to drinking fountains and other equipment. This will require appropriate receptacles in some cases and direct wiring in other cases, depending upon equipment furnished.

K. Install and wire all thermostats, aquastats and other devices furnished under other

Divisions of this Specification directly controlling heating equipment or fan motors.

L. Mount and wire electric heaters furnished under other Divisions of this Specification.

M. Wire all ventilation equipment furnished under other Divisions of this Specification.

N. Each bidder or his authorized representatives shall, before preparing his proposal, visit all areas of the site in which work under this division is to be performed and inspect carefully the present installation. The submission of the proposal by this bidder shall be considered evidence that he or his representative has visited the proposed site and noted the locations and conditions under which the work will be performed and that he takes full responsibility for a complete knowledge of all factors governing his work.

O. All power interruptions shall be at the Owner's convenience. Each interruption shall have prior approval.

P. It is the intent of these Specifications that the electrical system shall be suitable in every way for the service required. All material and all work which may be reasonably implied as being incidental to the work of this Section shall be furnished at no extra cost.

1.2 SERVICE & METERING

A. Permanent electrical power shall be provided by Florida Power & Light (FPL) at voltages indicated on the drawings.

B. The Contractor is responsible for providing all required temporary and permanent power at no cost to the Owner. The Contractor is responsible for providing all required information to FPL (including electrical plans, site survey/plan, landscaping plans, FPL required signed forms, etc.) in order to complete the engineering process. The Contractor should assume the cost of the temporary and permanent power to the site. The Contractor shall include $10,000.00 in their bid for FPL new services as shown on the electrical plans.

C. The Contractor shall be responsible for all coordination with FPL.

D. Refer to the electrical drawings for additional requirements.

1.3 CODES, INSPECTION, & FEES

A. All material and installation shall be in accordance with the latest edition of the National Electrical Code and all applicable national, local and state codes.

B. Pay all fees required for permits and inspections including any charges associated with the service modifications.

1.4 TESTS

A. Test all systems and repair or replace all defective work. Make all necessary adjustments to the systems and instruct the Owner's personnel in the proper operation of the systems.

B. The following minimum tests and checks shall be made prior to the energizing of electrical equipment. Test shall be by an independent NETA certified testing firm, and a certified test report shall be submitted stating that the equipment meets and operates in

accordance with the Manufacturer's and job specifications, and that equipment and installation conforms to all applicable Standards and Specifications:

1. Testing and setting of protective relays for calibration and proper operation.

2. Mechanical inspection of all circuit breakers 100 amps and larger to assure proper operation.

3. Motors: Megger to ground each motor winding. Record date, motor temperature, terminal, reading and operator and have Owner representative sign off on each reading.

4. Conductors: Megger to ground prior to termination all 600 volt conductors not used for service conductors. Record the date, conductor, reading and operator and have Owner representative sign off on each reading.

5. Service Conductors: Megger to ground prior to termination in the presence of the Engineer or his representative all 600 volt service conductors. Record date, conductor, reading, operator, and have the Owner representative sign off on each reading.

6. 480 Volt Main Breakers: After installing, with circuit breakers closed, but prior to terminating any conductors or bus to the existing switchgear, megger each phase to phase and phase to ground. Record date, test (i.e. A/B or A/G), reading and operator and have Owner representative sign off on each reading.

7. 480 Volt Motor Control Centers, Main Breakers, ATS, Power Panels: After installing, with circuit breakers closed, but prior to terminating any conductors or bus to the motor control center, megger each phase to phase and phase to ground. Record the date, test (i.e. A/B or A/G), reading and operator and have Owner representative sign off on each reading.

8. Connections & Terminations:

    a. 480 Volt Switchboards, Main Breakers, ATS and Motor Control Centers: Torque to Manufacturer's values in the presence of the Engineer or his representative. Record the date, conductor, torque, operator and have the Engineer sign off on each reading.

9. Data Base: After equipment suppliers test, calibrations, and inspection, megger all circuits leaving all switchgear and motor control centers. Record the date, conductor, circuit condition (i.e. load connected or unconnected), reading and operator and have Owner representative sign off on each reading.

10. Hot Spot Testing: Perform infrared hot spot inspection of the 480 volt switchboard, main breaker, ATS, motor control centers and associated equipment as soon as determined by the engineer that representative loads are present. Record the date, gear conditions found, operator and have the owner's representative who must be present for the inspection sign off in each instance.

11. Miscellaneous:

    a. Meggering must be done at 1000 VDC for one minute. The ground plane

used must be the one established at the main source of energy for conductors, switchboards and control centers. The motor frame may be used for the ground plane for motors.

b. In the course of construction, it will become necessary to temporarily energize some systems for testing. Confirm that any motor has been meggered prior to connection and testing. Do not leave any motor or system unattended and energized without written authorization.

c. An unsuccessful test will be one in which any one of the three megger readings differs from another by more than 25%. Engineer shall determine if cables and/or equipment bussing shall be replaced.

1.5 RELATED WORK

A. Start-up: Section 01650.

B. Demolition: Section 02050

C. Project Record Documents: Section 01720

D. Division 2: Sitework

E. Division 3: Concrete

1.6 SLEEVES AND FORMS FOR OPENING

A. Provide and place all sleeves for conduits penetrating floors, walls, partitions, etc. Locate all necessary slots for electrical work and form before concrete is poured.

1.7 CUTTING AND PATCHING

A. All cutting and patching shall be done in a thoroughly workmanlike manner.

1.8 INTERPRETATION OF DRAWINGS

A. The Drawings are not intended to show exact locations of conduit runs.

B. All three-phase circuits shall be run in separate conduits unless otherwise shown on the Drawings.

C. Unless otherwise approved by the Engineer conduit shown exposed shall be installed exposed; conduit shown concealed shall be installed concealed.

D. Where circuits are shown as "home-runs" all necessary fittings and boxes shall be provided for a complete raceway installation.

E. The Contractor shall harmonize the work of the different trades so that interferences between conduits, piping, equipment, architectural and structural work will be avoided. All necessary offsets shall be furnished so as to take up a minimum space and all such offsets, fittings, etc., required to accomplish this shall be furnished and installed by the Contractor without additional expense to the Owner. In case interference develops, the Owner's authorized representative is to decide which equipment, piping, etc., must be relocated, regardless which was installed first.

F. Verify with the Engineer the exact locations and mounting heights of lighting fixtures, switches and receptacles prior to installation.

G. The locations of equipment, fixtures, outlets, and similar devices shown on the Drawings are approximate only. Exact locations shall be as approved by the Engineer during construction. Obtain in the field all information relevant to the placing of electrical work and in case of any interference with other work, proceed as directed by the Engineer and furnish all labor and materials necessary to complete the work in an approved manner.

H. Surface mounted panel boxes, junction boxes, conduit, etc., shall be supported by spacers to provide a clearance between wall and equipment.

I. Circuit layouts shown are not intended to show the number of fittings, or other installation details. Furnish all labor and materials necessary to install and place in satisfactory operation all power, lighting, and other electrical systems shown. Additional circuits shall be installed wherever needed to conform to the specific requirements of the equipment.

J. The ratings of motors and other electrically operated devices together with the size shown for their branch circuit conductors and conduits are approximate only and are indicative of the probable power requirements insofar as they can determined in advance of the purchase of equipment.

K. All connections to equipment shall be made as shown, specified, and directed and in accordance with the Manufacturer's approved shop drawings, regardless of the number of conductors shown on the Drawings.

1.9 SIZE OF EQUIPMENT

A. Investigate each space in the building where equipment must pass to reach its final location. If necessary, the Manufacturer shall be required to ship his material in sections, sized to permit passing through such restricted areas in the building.

B. The equipment shall be kept upright at all times. When equipment has to be tilted for ease of passage through restricted areas during transportation, the Manufacturer shall be required to brace the equipment suitably, to insure that the tilting does not impair the functional integrity of the equipment.

1.10 RECORD DRAWINGS

A. Requirements for record drawings are specified in Section 01720: Project Record Documents.

1.11 COMPONENT INTERCONNECTIONS

A. Component equipment furnished under this Specification will not be furnished as integrated systems. Contractor shall field install and wire completely all components.

B. Contractor shall analyze all systems components and their shop drawings, identify all terminals and prepare drawings and wiring tables necessary for component interconnection. Contractor shall provide crimp on wire numbers on both ends of all control wiring installed between all panels furnished under this contract. These numbers shall directly relate to the interconnect wiring drawing furnished by the Contractor and be

reflected in the record drawings submitted.

1.12 SHOP DRAWINGS

A. As specified under other sections shop drawings shall be submitted for approval of all materials, equipment, apparatus, and other items as required by the Engineer.

B. Shop drawings shall be submitted for the following equipment:

1. Fused Disconnects and Non-Fused Disconnects
2. Lift Station Control Panel
3. Dry Type Transformers
4. Panelboards
5. Lighting Contactor Panels
6. Uninterruptible Power Supplies (UPS)
7. Lighting Fixtures with Structural Engineering Certification
8. Disconnect Switches
9. Enclosed Circuit Breakers
10. Motor Starters
11. Lighting Contactors
12. Emergency Battery Units
13. Wire and Cable
14. Conduit Drawings
15. Equipment Racks with Structural Engineering Certification
16. Lightning Protection and Grounding System
17. Field Instrument Transmitters and enclosures
18. Coordination, Short Circuit and Arc Flash Study

C. The Manufacturer name and product designation and catalog data sheet shall be submitted for the following material:

1. Conduit
2. Receptacles
3. Boxes and fittings

4. Switches

5. Lamps

6. Control Relays

D. Prior to submittal by the Contractor, all shop drawings shall be checked for accuracy and contract requirements. Shop drawings shall bear the date checked and shall be accompanied by a statement that the shop drawings have been examined for conformity to Specifications and Drawings. This statement shall also list all discrepancies with the Specifications and Drawings. Shop drawings not so checked and noted shall be returned.

E. The Engineer's check shall be only for conformance with the design concept of the project and compliance with the Specifications and Drawings. The responsibility of, or the necessity of, furnishing materials and workmanship required by the Specifications and Drawings which may not be indicated on the shop drawings is included under the work of this Section.

F. The responsibility for all dimensions to be confirmed and correlated at the job site and for coordination of this work with the work of all other trades is also included under the work of this Section.

G. No material shall be ordered or shop work started until the Engineer's approval of shop drawings has been given.

1.13 MANUFACTURER SERVICES

A. Provide Manufacturer services for testing and start-up of the following equipment:

1. Automatic Transfer Switches

2. Generator

3. Motor Starters

4. Other items as required by appropriate specification sections.

B. The Manufacturer of the above listed equipment shall provide experienced Field Service Engineer to accomplish the following tasks:

1. The equipment shall be visually inspected upon completion of installation and prior to energization to assure that wiring is correct, interconnection complete and the installation is in compliance with the manufacturer's criteria. Documentation shall be reviewed to assure that all Drawings, operation and maintenance manuals, parts list and other data required to check out and sustain equipment operation is available on site. Documentation shall be red-lined to reflect any changes or modifications made during the installation so that the "As-built" equipment configuration will be correctly defined. Spare parts shall be inventoried to assure correct type and quantity. The Manufacturer shall provide written approval that equipment supplied is approved for energization.

2. The Field Service Engineers shall provide engineering support during the energization and check out of each major equipment assembly. They shall

perform any calibration or adjustment required for the equipment to meet the Manufacturer's performance specifications.

3. Upon satisfactory completion of equipment test, they shall provide engineering support of system tests to be performed in accordance with Manufacturer's test specifications.

4. Two (2) 4-hour training sessions on operation, and two (2) 4-hour training sessions (one for each system) on maintenance and trouble-shooting procedures shall be provided for the Owner's maintenance personnel. All training shall be conducted at a facility provided by the Owner. The maintenance and trouble-shooting sessions shall be conducted with record "As-built" electrical drawings sufficient for a class of eight personnel.

5. A final report shall be written and submitted to the Contractor within fourteen days from completion of final system testing. The report shall document the inspection and test activity, define any open problems and recommend remedial action. The Contractor shall forward a copy of this report to the Engineer for approval.

1.14 MATERIALS

A. The materials used in all systems shall be new, unused and as hereinafter specified. All materials where not specified shall be of the very best of their respective kinds. Samples of materials or Manufacturer's specifications shall be submitted for approval as required by the Engineer.

B. Materials and equipment used shall be Underwriters Laboratories, Inc. listed.

C. Electrical equipment shall at all times during construction be adequately protected against mechanical injury or damage by water. Electrical equipment shall not be stored out-of-doors. Electrical equipment shall be stored in dry permanent shelters. If any apparatus has been damaged, such damage shall be repaired by the Contractor at his own cost and expense. If any apparatus has been subject to possible injury by water, it shall be thoroughly dried out and put through such special tests as directed by the Engineer, at the expense of the Contractor, or shall be replaced by the Contractor at his own expense.

1.15 COORDINATION, SHORT CIRCUIT AND ARC FLASH HAZARD STUDY

A. General:

1. The Contractor shall provide a Power System Study and Arc Flash Study for the electrical power distribution and motor control equipment. The studies shall be a totally independent effort to verify adequacy of all of the existing equipment as well as new additions being implemented under these Specifications. The studies shall be prepared by a professional Engineer, registered in the State of Florida, with demonstrated experience in the performance of industrial power system and fault arc hazard analysis. All work shall be submitted both hard copy and thumb drive. The studies shall be prepared using the latest version of SKM Power Tools software. The following firms are approved for the coordination, short circuit and arc flash study:

a. Judson Walker P.E. RCDD (904) 219-0885. Email jawpe@bellsouth.net

b. Industry Electric Design, Don Trawick, P.E. (678) 617-7507. Email dbt@iedelectric.com

c. EPS, Jeff Edward, P.E. (214) 406-2146 j.edwards@eps-ed.com.

2. The Contractor shall provide data necessary to perform the study. This includes feeder cable sizes, approximate feeder length motor data, generator data, existing protective relay settings and any other information relevant to the study.

3. A summary of the short circuit analysis shall be provided to the Contractor at the time shop drawings for all of the new equipment is submitted for approval.

4. The Contractor shall provide complete sets of motor control center and emergency generator shop drawings for use in the studies.

5. Two studies are required 1 ERM switch on and 2 ERM switch off. Dual labeling shall be provided and installed on the electrical equipment. Orange labels shall be provided for equipment when the switch is off and blue lables shall be provided for equipment when the switch is on.

B. Scope:

1. The short circuit study shall be in accordance with ANSI Standard C37.010 and C37.13, shall be performed to check the adequacy, and to verify the correct application of circuit protective devices and other system components specified. The study shall address the case when the system is being powered from the normal source as well as from the on-site generating facilities. Minimum as well as maximum possible fault conditions shall be adequately covered in the study.

2. Fault contribution of all motors shall be considered. The Contractor shall be responsible for obtaining all required data of equipment. All back-up calculations shall become part of the final report. The calculations shall be in sufficient detail to allow easy review.

3. The arc flash analysis study shall include the calculations of flash protection boundary limits and the incident energy exposure for the maximum arc producing flash expected from the electrical equipment. The study will determine incident energy exposure level and flash arc protection boundaries for the electrical equipment, based on IEEE-1584 and NFPA-70E. The study shall be based on the protective device settings and interrupting device clearing time.

C. Contents:

1. The study shall include representation of the power company's system, the base quantities selected, impedance source-data, calculation methods and tabulations, one-line and impedance diagrams, conclusions and recommendations. Short-circuit momentary duties, shall be calculated on the basis of an assumed bolted three-phase short circuit at the main breaker, ATS, 480 volt motor control center, distribution panelboard, pertinent branch circuit panelboard, and other significant locations throughout the systems. The short circuit tabulations shall include significant X to R ratios, asymmetry factors, KVA,

and symmetrical fault current.

2. A protective device time current coordination study shall be included with coordination plots of key and/or limiting devices, tabulated data, rating, and/or settings selected. The study shall present an Engineering balance between the competing objectives of protection and continuity of service for the system specified, taking into account the basic factors of sensitivity, selectivity and speed.

3. Separate plots shall be provided for each mode, "normal," and, "standby," operation. Maximum fault values shall be shown in each case. Both power sources shown in one plot will not be accepted.

4. Generator short circuit decrement curves and thermal limit curves shall be included.

5. Required settings for breakers and relays shall be maximized to provide the most effective protection possible whether the system is fed from the normal or emergency source.

6. Tabulations indicating recommended set points for all protective devices shall be provided. This shall include the normal as well as the emergency source.

7. Arc Flash study shall include representation of the calculation methods and tabulations, and a one-line drawing of all identifying equipment included in this study. The complete study shall be turned over to the Owner as per 01300. As part of the study, the Contractor shall affix permanent adhesive non-fading labeling indicating the equipment ID number and required information as required by NFPA 70E. Two Arc Flash labels shall be provided for the main circuit breakers (MB-1 and MB-2), MCC-1 main and tie breakers and MCC-2 main breaker. The first label shall include the maximum arc flash incident energy condition for normal operation. The second label shall include the arc flash incident energy condition when the Arc Energy Reduction Maintenance Setting Switch (ERMS) is turned ON (maintenance mode). Samples of arc flash warning labels are presented below:

Figure 1

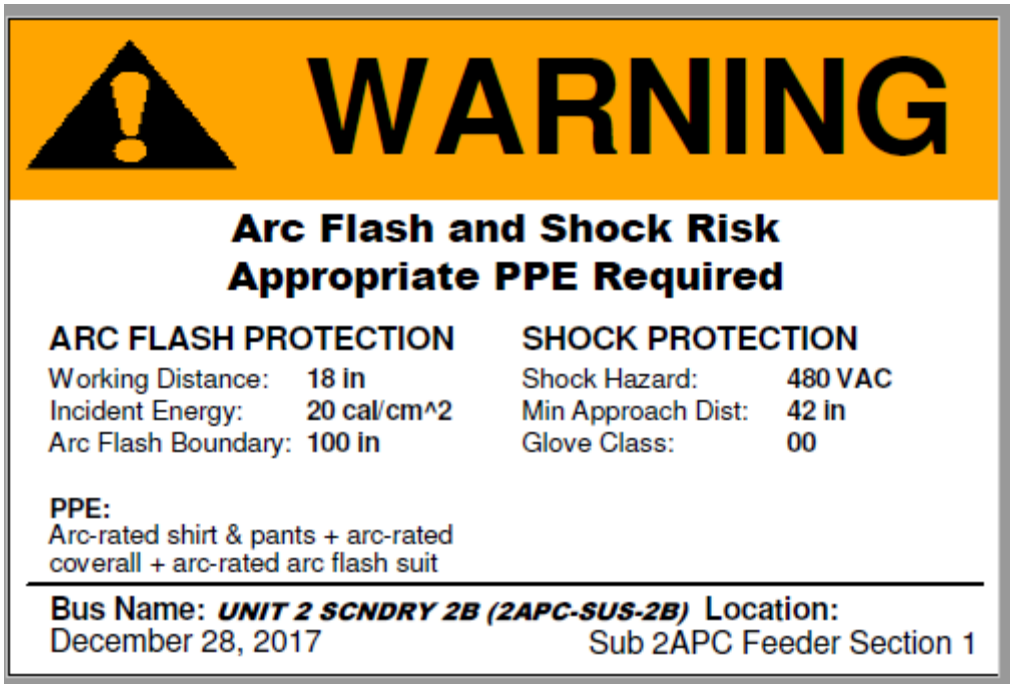
WARNING
Arc Flash and Shock Risk
Appropriate PPE Required
ARC FLASH PROTECTION
Working Distance: 18 in
Incident Energy: 20 cal/cm^2
Arc Flash Boundary: 100 in
SHOCK PROTECTION
Shock Hazard: 480 VAC
Min Approach Dist: 42 in
Glove Class: 00
PPE:
Arc-rated shirt & pants + arc-rated coverall + arc-rated arc flash suit
Bus Name: UNIT 2 SCNDRY 2B (2APC-SUS-2B) Location:
December 28, 2017
Sub 2APC Feeder Section 1

Figure 2

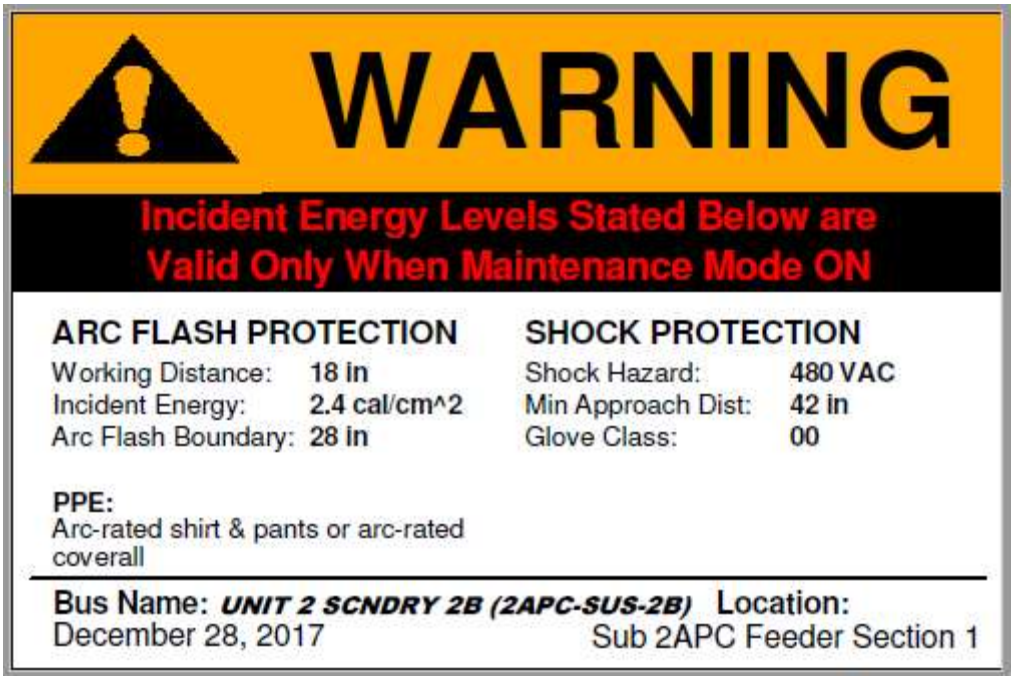

D. Motor Current-Time Characteristic Curves:

1. A complete independent set of current-time characteristic curves for all 480 volt motor drives indicating coordination between the protective relays and the thermal characteristics of the motor shall be provided.

2. The Contractor shall obtain from the motor supplier, the necessary information to perform the study. Certified curves for, "Safe time vs. current at 100 percent voltage," and "Accelerating time vs. current at 100 percent voltage," shall become part of the final report.

E. Motor Starting Study:

1. A motor starting study for all large electric drives to determine voltage dip or power inrush limitations at selected locations due to starting of motors shall be provided. This applies to both the normal and the emergency mode.

F. Generator Protective Devices:

1. The study shall address all of the protective devices provided for generator protection.

2. Protective relays requiring settings shall include, but not necessarily limited to:

a. Differential

b. Overcurrent with voltage restraint

c. Ground

d. Undervoltage

e. Reverse power

f. Unbalanced loading and open phase

g. Loss of excitation

G. General Information for Time-Current Curves Presentation:

1. The coordination plots shall include complete titles, representative one-line diagrams, legends, associated power company's relay or system characteristics, significant motor starting characteristics, complete parameters for power, and substation transformers, and complete operating bands for low-voltage circuit breaker trip devices.

2. The coordination plots shall define the types of protective devices selected, together with the proposed coil taps, time-dial settings and pickup settings required.

3. The short-time region shall indicate the medium voltage relay instantaneous elements, the magnetizing in-rush, and ANSI withstand transformer parameters, the low-voltage circuit breaker instantaneous trip devices, fuse manufacturing to tolerance bands, and significant symmetrical and asymmetrical fault currents.

4. Each primary protective device required for a delta-to-wye connected transformer shall be selected so that the characteristic or operating band is within the transformer parameters; which, where feasible, shall include a parameter equivalent to 58 percent of the ANSI withstand point to afford protection for secondary line-to-ground faults.

5. Low-voltage power circuit breakers shall be separated from each other and the associated primary protective device, where feasible, by a 16 percent current margin for coordination and protection in the event of secondary line-to-line faults.

6. Protective relays shall be separated, where feasible, by a 0.3 second time margin when the maximum three-phase fault flows, to assure proper selectivity.

1.16 CONDUIT DRAWINGS

A. In addition to the manufacturer's equipment shop drawings, the Contractor shall submit for the approval, electrical installation working drawings for the overall site work, lift station areas, and all process structure areas containing the following:

1. Concealed and buried conduit layouts shown on floor plans drawn at not less than 1/4-inch = 1-foot-0-inch scale. The layouts shall include locations of process equipment, motor control centers, transformers, panelboards, control panels and equipment, motors, switches, motor starters, large junction or pull boxes, instruments, and any other electrical devices connected to concealed or buried conduits.

2. Plans shall be drawn with ACAD 2021, size 36-inch x 24-inch, and shall be presented in a neat, professional manner. Drawing files shall be provided for

review.

3. Concrete floors and/or walls containing concealed conduits shall not be poured until conduit layouts are approved.

4. Site plan conduit layout drawings shall be at 1" = 30'0".

Note: ACAD drawing files are available from the Engineer.

1.17 OPERATION & MAINTENANCE DATA

A. Submit complete operations and maintenance data for all equipment furnished under this Division in accordance with Section 01730. The manuals shall be prepared specifically for this installation and shall include all required cuts, Drawings, equipment lists, descriptions, complete part lists, etc. that are required to instruct operating and maintenance personnel unfamiliar with such equipment.

1.18 WARRANTY

A. Provide a warranty for all the electrical equipment in accordance with the requirements of other sections, but in no case less than 1 year from date of owner acceptance.

PART 2 - PRODUCTS

THIS PART NOT USED

PART 3 - EXECUTION

THIS PART NOT USED

END OF SECTION

THIS PAGE INTENTIONALLY LEFT BLANK

SECTION 16108

MISCELLANEOUS EQUIPMENT

PART 1 - GENERAL

1.1 SCOPE OF WORK

A. Furnish and install all miscellaneous equipment as hereinafter specified and as shown on the Drawings.

PART 2 - PRODUCTS

2.1 MATERIALS

A. Disconnect Switches:

1. Fusible and non-fusible disconnect switches shall be heavy-duty, NEMA type H, quick-make, quick-break, visible blades, 600 volt, 3 pole with full cover interlock. All current carrying parts shall be copper.

2. Enclosure type shall be NEMA 4X 316 stainless steel with copper lugs except as otherwise shown on the Drawings.

3. Switches shall be horsepower rated as manufactured by the Square D, Eaton or Allen Bradley.

4. Control wiring shall not pass through any disconnect enclosure. A junction box shall be provided, constructed of the same material as the disconnect, and utilized to separate power and control wiring prior to the disconnect enclosure.

5. Each disconnect shall be provided with a plastic nameplate, affixed to the enclosure without screws, identifying the equipment served.

B. Manual Motor Starters:

1. Manual motor starters shall be furnished and installed for single-phase motors. Manual starters shall be non-reversing, reversing or two speed type as shown on the Drawings. Built-in control stations shall be furnished where shown on the Drawings.

2. Enclosure type shall be NEMA 1 except as shown on the Drawings.

3. All outdoor enclosures shall be NEMA Type 4 stainless steel.

4. Manual motor starters shall be as manufactured by the Square D or approved equal.

C. Magnetic Motor Starters:

1. Motor starters shall be 2 or 3 pole, 1 or 3-phase as required, 60 Hz, 600 volt, magnetically operated, full voltage nonreversing except as shown on the Drawings. NEMA sizes shall be as required for the horsepowers shown on the Drawings.

2. Two speed starters shall be for single or two winding motors as shown on the Drawings.

3. Each motor starter shall have a 120 volt operating coil, and control power transformer. Three phase starters shall have 3 overload relays. Auxiliary contacts shall be provided as shown on the Drawings or required.

4. Overload relays shall be non-adjustable, ambient compensated and manually reset.

5. Control power transformers shall be sized for additional load where required. Transformer secondaries shall be equipped with time-delay fuses.

6. Built-in control stations and indicating lights shall be furnished where shown on the Drawings.

7. Enclosure type shall be NEMA 1 except as shown on the Drawings.

8. NEMA Type 4 enclosures shall be stainless steel.

9. Magnetic motor starter shall be as manufactured by the Square D, Eaton or Allen Bradley.

D. Combination Magnetic Motor Starters:

1. Motor starters shall be a combination motor circuit protector and 3-pole, 60 Hz, 600 volt, magnetically operated, full voltage non-reversing contactor except as otherwise shown on the Drawings. NEMA sizes shall be as required for the horsepowers shown on the Drawings.

2. Two speed starters shall be for single or two winding motors as shown on the Drawings.

3. Each motor starter shall have a 120 volt operating coil and control power transformer. Three phase starters shall have 3 overload relays. Auxiliary contacts shall be provided as shown on the Drawings or required.

4. Overload relays shall be non-adjustable, ambient compensated and manually reset.

5. Built-in control stations and indicating lights shall be furnished where shown on the Drawings.

6. Enclosure type shall be NEMA 1 except as shown on the Drawings.

7. All outdoor enclosures shall be NEMA Type 4X 316 stainless steel.

8. Motor circuit protectors shall be molded case with adjustable magnetic trip only. They shall be specifically designed for use with magnetic motor starters. Motor circuit protectors shall be furnished with bolt-on current limiting fuses.

9. Combination magnetic motor starters shall be as manufactured by the Square D, Eaton or Allen Bradley.

E. Control Stations:

1. Control stations shall be NEMA 4X stainless steel heavy-duty type, with full size

operators when located outdoors, in "NEMA 4" locations or in "Corrosive" areas.

2. Control stations shall be Class 9001, manufactured by the Square D Company or approved equal.

3. Pilot lights shall be complete with glass jewels and 150 volt lamps.

F. Dry Type Step Down Transformers:

1. Transformers shall be dry type, two-winding with KVA and voltage ratings as shown on the Drawings.

2. Four full capacity taps shall be furnished, two 2-1/2% above and two 2-1/2% below rated primary voltage.

3. Transformers shall be built in accordance with ANSI C89 and NEMA ST1-4 with a maximum insulation temperature rise of 115° C.

4. Transformers shall be manufactured by the Square D, Eaton or Allen Bradley.

G. Unless otherwise noted, all outdoor enclosures shall be NEMA 4X 316 stainless steel. NEMA 4X push buttons and pilot lights shall be provided in all weatherproof control panels.

H. All Enclosures installed in “Corrosive” areas shall be non-metallic fiberglass reinforced polyester.

END OF SECTION

SECTION 16110

RACEWAYS AND FITTINGS

PART 1 - GENERAL

1.1 SCOPE OF WORK

A. Furnish and install complete raceway systems as shown on the Drawings and as specified herein.

1.2 APPLICATIONS

A. Except where otherwise shown on the Drawings, or hereinafter specified. The following describes the conduit requirements of the project:

1. Aluminum conduit shall be used unless otherwise noted.

2. PVC Schedule 80: Underground.

3. 4-20mA instrumentation circuits shall be installed in schedule 80 PVC conduit with a #8 ground wire.

4. All conduits between the lift station wetwell and lift station control panel shall be PVC coated aluminum.

B. Where Schedule 80 PVC is used, all below grade elbows and risers to above grade shall be PVC coated aluminum. All elbows above grade shall be suitably grounded. Conduit spaces shall be provided for underground conduit installation.

C. All conduits between the wetwell and lift station control panel shall have Crouse Hinds EYSR conduit seals installed and filled with Chico cement.

D. All conduit of a given type shall be the product of one manufacturer.

E. All switch, outlet and control station boxes and fittings shall be cast aluminum FS boxes with aluminum covers.

F. Concealed switch, outlet and control station boxes in NEMA 1 areas shall be aluminum.

G. Terminal boxes, junction boxes, pull boxes, etc.; installed outdoors shall be NEMA 4X, 316 stainless steel. All boxes installed indoors (except in corrosive areas) may be aluminum. Boxes in corrosive areas shall be PVC.

H. Combination expansion-deflection fittings shall be used where exposed or embedded conduits cross structure expansion joints.

PART 2 - PRODUCTS

2.1 MATERIALS

A. Rigid Metal Conduit

1. Rigid metal conduit shall be for use under the provisions of NEC Article 344.

2. Rigid aluminum conduit shall be 6063 alloy and shall be as manufactured by New Jersey Aluminum Corp., AFC Co., VAW of America, Inc., or approved equal.

3. PVC coated aluminum conduit shall have a 1/50-in thick, polyvinyl chloride coating permanently bonded to the aluminum conduit and an internal phenolic coating, and shall be plasti-bond 2" as manufactured by Robroy Industries, Triangle PWC Inc., Perma-Cote Industries, or approved equal.

B. Rigid Nonmetallic Conduit

1. Rigid nonmetallic conduit shall be for use under the provisions of NEC Article 352.

2. PVC conduit shall be rigid polyvinyl chloride schedule 80 as manufactured by Carlon, An Indian Head Co., Kraloy Products Co., Inc., Highland Plastics Inc., or approved equal.

C. Liquidtight Flexible Metal Conduit, Couplings and Fittings

1. Liquidtight flexible metal conduit (LFMC) shall be for use under the provisions of NEC Article 350.

2. Liquidtight flexible metal conduit shall be galvanized steel, single strip, with a copper strip interwoven and suitable as a grounding means. LFMC shall be UL listed. LFMC shall have an extruded moisture and oil-proof PVC jacket. LFMC shall be Titan Type UL as manufactured by Southwire, Liquatite Type “LA” as manufactured by Electri-Flex, Anaconda Type UA as manufactured by Anamet Electrical, Inc., or approved equal.

3. Fittings used with liquidtight flexible metal conduit shall be of the 3-piece screw-in type malleable iron as manufactured by the O.X. Gedney Co. or approved equal.

4. Fittings installed on tanks, filter area, chemical rooms and other outdoor process areas shall be aluminum.

D. Liquidtight Flexible Non-Metallic Conduit and Couplings

1. Liquidtight flexible non-metallic conduit (LFNC) shall be for use under the provisions of NEC Article 356.

2. Liquidtight flexible non-metallic conduit shall be constructed of PVC. LFNC shall be UL listed. LFNC shall have an extruded moisture and oil-proof PVC jacket. LFNC shall be Ultratite Type NM as manufactured by Southwire, Type NM as manufactured by Electri-Flex or approved equal.

E. Boxes and Fittings:

1. PVC, aluminum and stainless steel switch and outlet boxes shall be manufactured by Carlon, Appleton, or approved equal.

2. NEMA 1 and NEMA 12 terminal boxes, junction boxes, pull boxes etc., installed indoors in air conditioned rooms shall be sheet steel unless otherwise shown on the Drawings. Boxes shall be galvanized and have continuously welded seams. Welds shall be ground smooth and galvanized. Fabricated from 14-gauge steel, minimum. Boxes shall be as manufactured by Hoffman Engineering Co., Stahlin, or approved equal. NEMA 4X boxes located outdoors and in the Belt Filter Press Building shall

be 316 stainless steel.

3. Cast aluminum boxes and fittings shall be copper-free aluminum with cast aluminum covers and corrosion-proof screws as manufactured by the Killark Electric Co., Crouse-Hinds Co., Appleton Electric Co., or approved equal.

4. Conduit hubs shall be as manufactured by Meyers Electric Products, Inc., Raco Div., Appleton Electric Co., or approved equal. Conduit hubs shall be provided for all outdoor conduit terminations.

5. Conduit wall seals shall be Type WSK as manufactured by the O.Z. Electrical Mfg. Co., or approved equal.

6. Combination expansion-deflection fittings shall be Type XD as manufactured by the Crouse-Hinds Co., or approved equal.

7. Conduit wall seals for new concrete walls below grade shall be O.Z./Gedney Co., Type WSK, Spring City Electrical Manufacturing Co., Type WDP, or approved equal.

8. Conduit wall seals for cored holes shall be Type CSML as manufactured by the O.Z./Gedney Co., or approved equal.

9. Conduit wall and floor seals for sleeved openings shall be Type CSMI as manufactured by the O.Z./Gedney Co., or approved equal.

10. Conduit sealing bushings shall be O.Z./Gedney Type CSB or approved equal.

F. Conduit Mounting Equipment:

1. Stainless steel channel and stainless steel hardware shall be used in all areas indoors or outdoors unless otherwise noted.

2. In “Corrosive” areas all mounting equipment shall be “non-metallic.”

PART 3 - EXECUTION

3.1 INSTALLATION

A. No conduit smaller than 3/4-inch electrical trade size shall be used, nor shall any have more than four 90 degree bends in any one run. Pull boxes shall be provided as required or directed. Minimum size in floor slabs shall be 3/4-inch.

B. No wire shall be pulled until the conduit system is complete in all details; in the case of concealed work, until all rough plastering or masonry has been completed; in the case of exposed work, until the conduit system has been completed in every detail.

C. The ends of all conduits shall be tightly plugged to exclude dust and moisture while the buildings are under construction.

D. Conduit supports shall be spaced at intervals as required to obtain rigid construction, but in no case less as required by the NEC.

E. Single conduits shall be supported by means of one-hole pipe clamps in combination with one-screw back plates, to raise conduits from the surface. Multiple runs of conduits

shall be supported on trapeze type hangers with steel horizontal members and threaded hanger rods. The rods shall be not less than 3/8-inch diameter. Material type shall be as specified in Section 2.

F. Conduit hangers shall be attached to structural steel by means of beam or channel clamps. Where attached to concrete surfaces, concrete inserts of the spot type shall be provided.

G. All conduits on exposed work shall be run at right angles to and parallel with the surrounding walls and shall conform to the form of the ceiling. No diagonal runs will be allowed. Bends in parallel conduit runs shall be concentric. All conduit shall be run perfectly straight and true. Conduits not installed in this fashion shall be replaced entirely at the Contractor's expense with no cost to the Owner.

H. No unbroken run shall exceed 300 feet in length. This length shall be reduced by 75 feet for each 90 degree elbow.

I. Conduit terminating in pressed steel boxes shall have double locknuts and insulated bushings.

J. Conduit terminating in gasketed enclosures shall be terminated with conduit hubs.

K. Conduit wall seals shall be used for all conduits penetrating walls below grade or other locations shown on the Drawings.

L. Liquidtight flexible metal conduit shall be used for all motor terminations and other equipment where vibration is present.

M. Flexible couplings shall be used in hazardous locations for all motor terminations and other equipment where vibration is present.

N. Conduit stub outs for future construction shall be provided with threaded PVC end caps at each end.

O. Metallic conduit entering manholes and below grade pull boxes shall be terminated with grounding type bushings and connected to a 5/8" x 10" copperweld rod with a #6 bare copper wire.

P. Underground 120 volt circuits (Schedule 80 PVC) shall be installed directly to the respective motor control centers, lighting panels, etc. Stainless steel pull boxes shall be wall mounted on structures to eliminate excessive bends. With prior approval, below grade pull boxes, equal to Brooks #2424 (minimum), with hot dip galvanized covers and frames may be used. Splices shall not be made in above or below grade pull boxes without prior approval.

Q. A 4-inch (unless otherwise noted) concrete conduit housekeeping pad shall be required for all exposed conduit stub-ups. This applies to ALL exposed conduits installed indoors or outdoors.

3.02 CONDUIT IDENTIFICATION

A. Exposed conduits shall be identified at the source, load, and all intermediate components of the raceway system. Examples of intermediate components include but are not limited to junction boxes, pull boxes, condulets, and disconnect switches. Identification shall be by means of an adhesive label with the following requirements:

1. Labels shall consist of an orange background with black text. Text for the label shall be the conduit number as indicated in the conduit and wire schedules.

2. In addition, at the source end of the conduit, a second line of text shall be included to indicate the load equipment name. This second line shall consist of the word “TO:” and the text in the ‘TO’ column of the conduit and wire schedule (e.g. TO: MCC-1A). At the load end of the conduit, a second line of text shall be included to indicate the source equipment name. This second line shall consist of the word “FROM:” and the text in the ‘FROM’ column of the conduit and wire schedule (e.g. FROM: MCC-1). This requirement applies only to the source and load ends of the conduit, and not anywhere in between.

3. For conduits ¾” through 1½” in size, the text shall be a minimum 18 point font. For conduits 2” and larger, the text shall be a minimum 24 point font.

4. Label height shall be ¾” minimum, and length shall be as required to fit required text. The label shall be installed such that the text is parallel with the axis of the conduit. The label shall be oriented such that the text can be read without the use of any special tools or removal of equipment.

5. Labels shall be installed after each conduit is installed and, if applicable, after painting. Labels shall be printed in the field via the use of a portable label printing system. Handwritten labels are not acceptable.

6. Labels shall be made of permanent vinyl with adhesive backing as manufactured by Brady, Seton equivalent, Panduit equivalent, or equal. Labels made of any other material are not acceptable.

B. Conduits that are not exposed but installed beneath free standing equipment enclosures shall be identified by means of a plastic tag with the following requirements:

1. The tag shall be made of white Tyvek material, and have an orange label with black text, as described above, adhered to it. Text for the label shall be the conduit number as indicated in the conduit and wire schedules.
2. The tag shall be affixed to the conduit by means of a nylon cable tie. The tag shall be of suitable dimensions to achieve a minimum text size of 18 points.

3. Tags shall be White Tyvek as manufactured by Brady, Seton equivalent, Panduit equivalent, or equal.

END OF SECTION

SECTION 16120

WIRES AND CABLES

PART 1 - GENERAL

1.1 SCOPE OF WORK

A. Furnish, install and test all wire, cable, and appurtenances as shown on the Drawings and as hereinafter specified.

1.2 SUBMITTALS

A. Samples of proposed wire and cable shall be submitted for approval. Each sample shall have the size, type of insulation and voltage stenciled on the jacket.

B. Approved samples will be sent to the project location for comparison by the Resident Engineer with the wire actually installed.

C. Installed, unapproved wire shall be removed and replaced at no additional cost to the Owner.

1.3 APPLICATIONS

A. Wire for lighting and receptacle circuits above grade shall be type THWN-2.

B. Wire for all power motor circuits and below grade lighting and receptacle circuits shall be type XHHW-2, stranded.

C. Single conductor wire for control, indication and metering shall be type MTW No. 14 AWG, 19 strand or type XHHW No. 14 AWG stranded.

D. Multi-conductor control cable shall be No. 14 AWG, 19 strand.

E. Wire for process instrumentation or shielded control cable shall be No. 16 AWG, shielded and stranded. All shielded cables shall be provided with a #16 shielded ground.

F. Cat 6 ethernet cable shall be shielded Twisted Pair 600 volt weatherproof rated cable suitable for outdoor installations. Belden or approved equal.

1.4 MINIMUM SIZES

A. Except for control and signal leads, no conductor smaller than No. 12 AWG shall be used.

PART 2 - PRODUCTS

2.1 MATERIALS

A. All wires and cables shall be of annealed, 98 percent conductivity, soft drawn stranded copper conductors.

2.2 600 VOLT WIRE AND CABLE

A. Type XHHW shall be cross-linked polyethylene (XLP); as manufactured by General Cable, Southwire Co., Collyer Insulated Wire Co., Rome Cable or approved equal.

B. Type THWN shall be as manufactured by General Cable, Southwire Co., Collyer Insulated Wire Co., Rome Cable or approved equal.

2.3 INSTRUMENTATION AND CONTROL CABLE

A. Process instrumentation wire shall be twisted pair, 600V, cross-linked polyethylene insulated, aluminum tape shielded, polyvinyl chloride jacketed, type "XLP" as manufactured by General Cable, American Insulated Wire Co., Eaton Corp. "Polyset," or approved equal. Multi-conductor cables shall be supplied with individually shielded twisted pairs.

B. Multi-conductor control cable shall be stranded, 600V, cross-linked polyethylene insulated with PVC jacket, type "XLP" as manufactured by General Cable, American Insulated Wire Co., Eaton Corp. "Polyset," or approved equal.

2.5 TERMINATIONS AND SPLICES

A. Power Conductors: Terminations shall be die type or set screw type pressure connectors as specified. Splices (where allowed) shall be die type compression connector and waterproof with heat shrink boot or epoxy filling.

B. Control Conductors: Termination on saddle-type terminals shall be wired directly with a maximum of two conductors per termination. Termination on screw type terminals shall be made with a maximum of two spade connectors. Splices (where allowed) shall be made with insulated compression type connectors. Heat shrink boots shall be utilized for all outdoor splices.

C. Instrumentation Signal Conductors (including graphic panel, alarm, low and high level signals): Terminations permitted shall be typical of control conductors. Splices are allowed at instrumentation terminal boxes only.

D. Except where otherwise approved by the Engineer no splices will be allowed in manholes, handholes or other below grade located boxes.

E. Splices shall not be made in push button control stations, control devices (i.e., pressure switches, flow switches, etc.), conduit bodies, etc.

PART 3 - EXECUTION

3.1 INSTALLATION

A. All conductors shall be carefully handled to avoid kinks or damage to insulation.

B. Lubrications shall be used to facilitate wire pulling. Lubricants shall be U.L. listed for use with the insulation specified.

C. Shielded instrumentation wire shall be installed from terminal to terminal with no splicing at any intermediate point.

D. Shielded instrumentation wire shall be installed in rigid steel conduit and pull boxes that contain only shielded instrumentation wire. Instrumentation cables shall be separated from control cables in manholes.

E. Shielding on instrumentation wire shall be grounded at one end only, as directed by supplier of the instrumentation equipment.

F. Wire and cable connections to terminals and taps shall be made with compression connectors. Connections of insulated conductors shall be insulated and covered. All connections shall be made using materials and installation methods in accordance with instructions and recommendations of the manufacturer of the particular item of wire and cable. The conductivity of all completed connections shall be not less than that of the uncut conductor. The insulation resistance of all completed connections of insulated conductors shall be not less than that of the uncut conductor.

G. All wire and cable shall be continuous and without splices between points of connection to equipment terminals, except a splice will be permitted by the Engineer if the length required between the points of connection exceeds the greatest standard shipping length available from the manufacturer specified or approved by the Engineer as the manufacturer of the particular item of wire and cable.

H. Steel fish tapes and/or steel pulling cables shall not be used in PVC conduit runs.

I. All control and instrumentation circuits and wiring shall be clearly and permanently numbered and labeled at each end so as to identify the location of the opposite end and the function of the circuit. Individual wires in a multi-wire circuit shall be identified with wire numbers. Labeling shall be in place prior to turnover of any equipment, system or sub-system to Owner.

3.2 TESTS

A. All 600-volt wire insulation shall be tested with a meg-ohmmeter after installation. Tests shall be made at not less than 1,000 VDC. See 16050 for additional testing requirements.

B. All service conductors shall be tested as in paragraph A above. These tests shall be witnessed by the Engineer. A written report shall be submitted to the engineer for review.

END OF SECTION

SECTION 16450

GROUNDING SYSTEM

PART 1 - GENERAL

1.1 SCOPE OF WORK

A. Furnish and install a complete grounding system in strict accordance with Article 250 of the National Electrical Code and as hereinafter specified and shown on the Drawings.

1.2 RELATED WORK

A. Wire shall be as specified under Section 16120.

B. Conduit shall be as specified under Section 16110.

PART 2 - PRODUCTS

2.1 MATERIALS

A. Ground rods: Ground rods shall be copperclad steel 5/8-inch x 40 foot. Ground rods shall be Copperweld or be an approved equal product.

PART 3 - EXECUTION

3.1 GENERAL

A. The service entrance equipment ground bus shall be grounded to the ground grid and to the building steel. The protecting conduits shall be bonded to the grounding conductor at both ends. The Contractor shall not allow the water pipe connections to be painted. If the connections are painted, they shall be disassembled and remade with new fittings.

B. Ground bus in all motor control centers and unit substations shall be connected to the service entrance equipment ground bus with a No. 4/0 conductor.

C. All steel building columns shall be bonded together and connected to the building ground grid and to the service entrance ground with a No. 4/0 copper conductor. The bond wire for all well pumps shall be connected to the well pump casing via Cadweld.

D. Conduits stubbed-up below a motor control center shall be fitted with insulated grounding bushings and connected to the motor control center ground bus. Boxes mounted below motor control centers shall be bonded to the motor control center ground bus. The grounding wire shall, unless otherwise indicated on the drawings, be sized in accordance with Table 250-122 of the National Electrical Code, except that a minimum No. 12 AWG shall be used.

E. Motors shall be grounded as specified in Section 16150, Motors.

F. Step down Transformer neutrals shall be grounded to a grounding electrode and the service entrance ground.

G. Grounding electrodes shall be driven as required. Where rock is encountered, grounding plates may be used in lieu of grounding rods.

H. All equipment enclosures, motor and transformer frames, conduits systems, cable armor, exposed structural steel and similar items shall be grounded.

I. Exposed connections shall be made by means of approved grounding clamps. Exposed connections between different metals shall be sealed with No-Oxide Paint Grade A or approved equal. All buried connections shall be made by welding process equal to Cadweld.

J. For reasons of mechanical strength, grounding conductors extending from the plant grounding grid to the ground buses of control centers and unit substations shall be No. 1/0 AWG.

K. The plant grounding grid conductors shall be embedded in backfill material around the structures.

L. All underground conductors shall be laid slack and where exposed to mechanical injury shall be protected by pipes or other substantial guards. If guards are iron pipe or other magnetic material, conductors shall be electrically connected to both ends of the guard.

M. The Contractor shall exercise care to insure good ground continuity, in particular between the conduit system and equipment frames and enclosures. Where necessary, jumper wires shall be installed.

3.2 TESTS

A. The Contractor shall test the ground resistance of the system by 3 point fall of potential method. All test equipment shall be provided by the Contractor and approved by the Engineer. Dry season resistance of the system shall not exceed 5 ohms. If such resistance cannot be obtained with the system as shown, the Contractor shall provide additional grounding as directed by the Engineer, without additional payment. The Contractor shall submit all grounding system test results to the Engineer for review.

END OF SECTION

CITY OF PORT ORANGE, FLORIDA
LIFT STATION REHABILITATION
AT LOWES/GATEWAY

VOLUSIA COUNTY, FLORIDA

AUGUST 2024

SHEET INDEX	
SHEET NUMBER	SHEET TITLE
GENERAL	
G1	COVER
G2	GENERAL NOTES
G3	SYMBOLS AND ABBREVIATION
CIVIL	
C1	DEMOLITION PLAN AND DETAIL
C2	PROPOSED SITE PLAN
MECHANICAL	
M1	LIFT STATION MECHANICAL PLAN
DETAILS	
D1	DETAILS
D2	DETAILS
D3	DETAILS
D4	DETAILS
ELECTRICAL	
E1	ELECTRICAL NOTES, SYMBOLS & ABBREVIATIONS
E2	ELECTRICAL DEMOLITION SITE PLAN
E3	SITE PLAN
E4	SINGLE LINE DIAGRAM
E5	PUMP STATION POWER AND GROUNDING PLAN VIEW
E6	ENCLOSURE DETAIL
E7	SUB PANEL LAYOUT
E8	ELEMENTARY DIAGRAM - 1
E9	ELEMENTARY DIAGRAM - 2
E10	ELEMENTARY DIAGRAM - 3
E11	PLC I/O DIAGRAM
E12	PLC I/O HYDRALINK MODEM DIAGRAM
E13	HYDRALINK ANALOG INPUT/OUTPUT MODULE
E14	EQUIPMENT RACK DETAILS
E15	TERMINATION CABINET DETAILS
E16	ELECTRICAL DETAILS 1

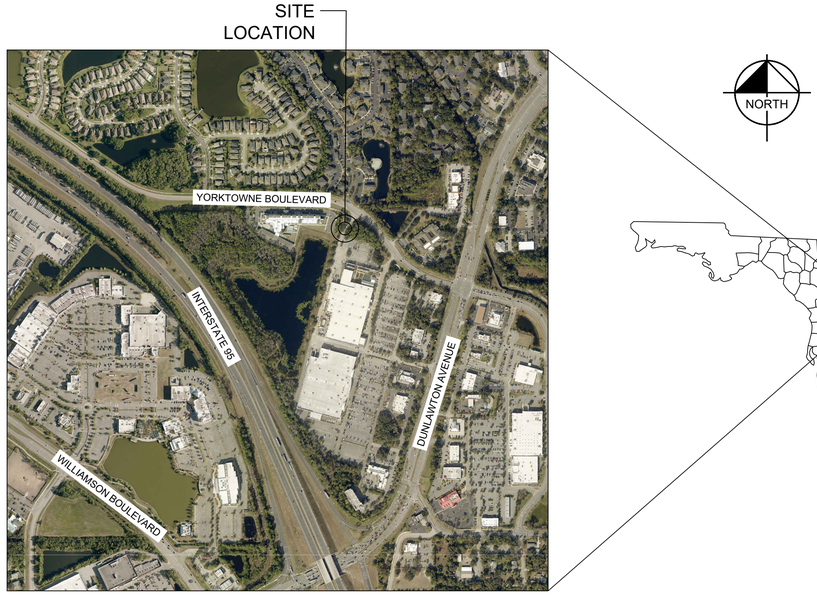

PROJECT VICINITY MAP
N.T.S.

UTILITY PROVIDERS

CITY OF PORT ORANGE
CONTACT: JUNOS REED
PHONE: (386) 506-5754
JUREED@PORT-ORANGE.ORG

CROWN CASTLE NATURAL GAS
CONTACT: FIBERDIG TEAM
PHONE: (888) 632-0931
FIBER.DIG@CROWNCASTLE.COM

TECO PEOPLES GAS - DAYTONA
CONTACT: JOAN DOMNING
PHONE: (813) 275-3783

FLORIDA POWER AND LIGHT
CONTACT: JOEL BRAY
PHONE: (386) 586-6403
JOEL.BRAY@FPL.COM

AT&T DISTRIBUTION
CONTACT: DINO FARRUGGIO
PHONE: (561) 683-2729

CHARTER COMMUNICATION
CONTACT: JERROD KAISER
PHONE: (321) 388-1928
JERROLD.KAISER@CHARTER.COM

ENGINEER
KIMLEY-HORN AND ASSOCIATES, INC.
1530 CORNERSTONE BLVD, BUILDING 1,
SUITE 200A, DAYTONA BEACH, FL 32117
CONTACT: NICOLE E. MCCONNELL, P.E.
(386) 271-0274
EMAIL: NICOLE.MCCONNEL@KIMLEY-HORN.COM

OWNER
CITY OF PORT ORANGE
1395 DUNLAWTON AVE
PORT ORANGE, FL 32129
CONTACT: JUNOS REED
(386) 506-5754
EMAIL: JUREED@PORT-ORANGE.ORG

CALL 2 WORKING DAYS BEFORE YOU DIG
IT'S THE LAW! DIAL 811
Know what's below. Call before you dig.
SUNSHINE STATE ONE CALL OF FLORIDA, INC.

100% SUBMITTAL

NOTES:

PRIOR TO ANY EXCAVATIONS THE CONTRACTOR SHALL COMPLY WITH THE UNDERGROUND FACILITY DAMAGE PREVENTION AND SAFETY ACT PER CHAPTER 556 OF FLORIDA LAW. CALL THE "SUNSHINE STATE ONE-CALL CENTER" 1-800-432-4770 FOR UNDERGROUND UTILITY LOCATIONS.

THESE PLANS MAY HAVE BEEN REDUCED IN SIZE BY REPRODUCTION. THIS MUST BE CONSIDERED WHEN OBTAINING SCALED DATA.

PREPARED BY
Kimley»Horn

© 2024 KIMLEY-HORN AND ASSOCIATES, INC.
1530 CORNERSTONE BLVD,
BUILDING 1, SUITE 200A,
DAYTONA BEACH, FL 32117
PHONE (407) 427-1673
WWW.KIMLEY-HORN.COM CA 00035106

THE SITE CONSTRUCTION STAKEOUT SHALL BE PERFORMED UNDER THE DIRECTION OF A FLORIDA REGISTERED SURVEYOR. AUTOCAD FILES WILL BE FURNISHED TO AID IN THE SITE CONSTRUCTION STAKEOUT. ANY DISCREPANCIES FOUND BETWEEN AUTOCAD FILES AND SITE CONSTRUCTION PLANS SHALL BE BROUGHT TO THE ENGINEER'S ATTENTION FOR CLARIFICATION PRIOR TO THAT STAKEOUT.

No.	REVISIONS	DATE	BY

THIS DOCUMENT IS PROTECTED BY SECTION 106 OF THE "UNITED STATES COPYRIGHT ACT". REPRODUCTION OR ALTERATION OF THIS DOCUMENT OR THE INFORMATION CONTAINED HEREON BY ANY MEANS WHATSOEVER IS STRICTLY PROHIBITED WITHOUT THE PRIOR WRITTEN CONSENT OF KIMLEY-HORN AND ASSOCIATES, INC. CONSENT IS HEREBY GRANTED SPECIFICALLY TO GOVERNMENTAL AGENCIES TO REPRODUCE THIS DOCUMENT IN COMPLIANCE WITH F.S. CHAPTER 119.

NICOLE E. MCCONNELL, P.E.
FLORIDA LICENSE NUMBER: 73789
DATE:

DATE 08/16/2024
PROJECT NO. 049204106
SHEET NUMBER G1

This document, together with the concepts and designs presented herein, as an instrument of service, is intended only for the specific purpose and client for which it was prepared. Reuse of and improper reliance on this document without written authorization and adaptation by Kimley-Horn and Associates, Inc. shall be without liability to Kimley-Horn and Associates, Inc.

GENERAL PROJECT DATA NOTES

GENERAL PROJECT DATA

FOR IDENTIFICATION OF CONTRACTUAL AGREEMENTS, THE ENGINEERING PLANS SHALL BE DATED MAY 17, 2024. ANY REVISIONS THEREAFTER WILL BE NOTED AND DATED ON THE AFFECTED DRAWING(S).

EXISTING UTILITY LOCATION

THE LOCATIONS OF ALL EXISTING UTILITIES SHALL BE SHOWN ON THE PLANS AND BE DETERMINED FROM THE BEST INFORMATION AVAILABLE. PRIOR TO THE START OF ANY CONSTRUCTION ACTIVITY, IT SHALL BE THE CONTRACTOR'S RESPONSIBILITY TO NOTIFY THE VARIOUS UTILITIES AND TO MAKE THE NECESSARY ARRANGEMENTS FOR ANY RELOCATION TO THESE UTILITIES WITH THE OWNER OF THE UTILITY. THE CONTRACTOR SHALL EXERCISE CAUTION WHEN CROSSING AN UNDERGROUND UTILITY, WHETHER SHOWN ON THE PLANS OR LOCATED BY THE UTILITY COMPANY. ANY DELAY OR INCONVENIENCE CAUSED TO THE CONTRACTOR BY THE RELOCATION OF VARIOUS UTILITIES SHALL BE INCIDENTAL, WITH NO COMPENSATION FROM THE UTILITY.

A SINGLE POINT UTILITY LOCATION SERVICE HAS BEEN SET UP FOR PARTICIPATING UTILITIES. CONTRACTOR IS TO CONTACT THE SUNSHINE STATE ONE CALL CENTER AT LEAST 2 AND NO MORE THAN 5 WORKING DAYS PRIOR TO THE SPECIFIC CONSTRUCTION ACTIVITY FOR FIELD LOCATION. NOTE THAT NOT ALL UTILITIES PARTICIPATE IN THIS PROGRAM. CONTRACTOR SHOULD CONTACT NON-PARTICIPATING UTILITIES SEPARATELY FOR THEIR FIELD LOCATING OF FACILITIES. PER FLORIDA STATUTE 553.851, THE CONTRACTOR OR EXCAVATOR IS REQUIRED TO NOTIFY THE GAS COMPANY 2 WORKING DAYS PRIOR TO STARTING EXCAVATION.

AS-BUILTS

AS-BUILTS SHALL BE PROVIDED BY THE CONTRACTOR TO THE UTILITY TWO WEEKS PRIOR TO FINAL INSPECTION. ALL AS-BUILT DATA SHALL BE PROVIDED BY A FLORIDA LICENSED SURVEYOR, SIGNED, SEALED, AND DATED BY THE RESPONSIBLE PARTY. SEE INDIVIDUAL SECTIONS (SEWER, WATER SYSTEM, ETC.) FOR ADDITIONAL AS-BUILT REQUIREMENTS.

PERMITS AND PERMIT REQUIREMENTS

STATE, COUNTY, CITY, AND ALL OTHER REGULATORY AGENCY PERMITS SHALL BE OBTAINED BY THE OWNER/DEVELOPER. A COPY OF ALL PERMITS SHALL BE PROVIDED TO THE UTILITY PRIOR TO ANY CONSTRUCTION ACTIVITY.

QUALITY CONTROL TESTING REQUIREMENTS

ALL TESTING RESULTS FOR NEW CONSTRUCTION SHALL BE PROVIDED TO THE UTILITY. TESTING REQUIREMENTS ARE TO BE IN ACCORDANCE WITH THE UTILITIES' SPECIFICATIONS AND REQUIREMENTS. ALL TEST RESULTS SHALL BE PROVIDED (PASSING AND FAILING) ON A REGULAR AND IMMEDIATE BASIS. NO TESTING TO BE SCHEDULED ON MONDAY OR FRIDAY.

SHOP DRAWINGS

SHOP DRAWINGS AND CERTIFICATIONS FOR ALL SEWER SYSTEM MATERIALS AND STRUCTURES ARE REQUIRED. THE CONTRACTOR SHALL SUBMIT SHOP DRAWINGS TO THE TO ENGINEER FIRST FOR APPROVAL, THEN TO THE UTILITY FOR APPROVAL PRIOR TO ORDERING THE MATERIALS REQUIRED FOR CONSTRUCTION.

NOTICE OF APPLICABILITIY

WHEREVER STATE, COUNTY, CITY OR LOCAL STANDARD SPECIFICATIONS DIFFER FROM THOSE CONTAINED HEREIN: THE CONTRACTOR SHALL NOTIFY THE ENGINEER AND UTILITY FOR CERTIFICATION. TYPICALLY THE MORE STRINGENT SHALL GOVERN.

PRE-CONSTRUCTION CONFERENCE

A PRE-CONSTRUCTION CONFERENCE SHALL BE REQUIRED WITH THE UTILITY, ENGINEER, AND CONTRACTOR IN ATTENDANCE. THE CONTRACTOR SHALL SCHEDULE, WITH ALL PARTIES, THE TIME AND PLACE OF MEETING PRIOR TO ANY CONSTRUCTION COMMENCEMENT. ALL JURISDICTIONAL PERMITS, APPROVED SHOP DRAWINGS, AND CONNECTION FEES SHALL BE IN PLACE PRIOR TO PRE-CONSTRUCTION CONFERENCE SCHEDULING. THE UTILITY REQUIRES AT LEAST 72 HOURS NOTICE FOR SCHEDULING OF PRE-CONTRUCTION CONFERENCE.

GENERAL CONSTRUCTION REQUIREMENTS

EROSION CONTROL

EROSION AND SILTATION CONTROL MEASURES ARE TO BE PROVIDED AND INSTALLED PRIOR TO COMMENCEMENT OF ANY CONSTRUCTION. THESE MEASURES ARE TO BE INSPECTED BY THE CONTRACTOR ON A REGULAR BASIS AND ARE TO BE MAINTAINED OR REPAIRED ON AN IMMEDIATE BASIS, AS REQUIRED. LOCAL AND STATE JURISDICTIONAL AGENCIES SHALL BE REFERRED TO AND IMPLEMENTED DURING ALL CONSTRUCTION.

LIMITS OF DISTURBANCE

AT NO TIME SHALL THE CONTRACTOR DISTURB SURROUNDING PROPERTIES OR TRAVEL ON SURROUNDING PROPERTIES WITHOUT WRITTEN CONSENT FROM THE PROPERTY OWNER. REPAIR OR RECONSTRUCTION OF DAMAGED AREAS ON SURROUNDING PROPERTIES SHALL BE PERFORMED BY THE CONTRACTOR ON AN IMMEDIATE BASIS. ALL COSTS FOR REPAIRS SHALL BE THE RESPONSIBILITY OF THE CONTRACTOR WITH NO COMPENSATION FROM THE UTILITY.

FILL MATERIAL

ALL FILL MATERIALS SHALL NOT CONTAIN ANY MUCK, STUMPS, ROOTS, BRUSH, VEGETATIVE MATTER, RUBBISH OR OTHER MATERIAL THAT WILL NOT COMPACT INTO A SUITABLE AND ENDURING BACKFILL. FILL SHALL BE CLEAN, NON-ORGANIC, GRANULAR MATERIAL WITH NOT MORE THAN 10% PASSING THE NO. 200 SIEVE.

COMPACTION

FILL MATERIALS PLACED UNDER ROADWAYS SHALL BE COMPACTED TO AT LEAST 98% OF THE MAXIMUM DENSITY AS SPECIFIED IN AASHTO T-180. ALL OTHER FILL AREAS ARE TO BE COMPACTED TO AT LEAST 95% MAXIMUM DENSITY AS SPECIFIED IN AASHTO T-180. FILL MATERIALS SHALL BE PLACED AND COMPACTED IN A MAXIMUM OF 12" LIFTS. THE CONTRACTOR SHALL PROVIDE THE ENGINEER AND OWNER WITH ALL (PASSING AND FAILING) TESTING RESULTS. RESULTS SHALL BE PROVIDED ON A TIMELY AND REGULAR BASIS PRIOR TO CONTRACTOR'S PAY REQUEST SUBMITTAL.

LAYOUT AND CONTROL

BENCHMARK INFORMATION SHALL BE PROVIDED TO THE CONTRACTOR BY THE OWNER OR OWNER'S SURVEYOR. ANY DISCREPANCIES BETWEEN FIELD MEASUREMENTS AND CONSTRUCTION PLAN INFORMATION SHALL BE BROUGHT TO THE ATTENTION OF THE ENGINEER IMMEDIATELY.

QUALITY CONTROL TESTING REQUIREMENTS

ALL TESTING RESULTS SHALL BE PROVIDED TO THE OWNER/OPERATOR, COUNTY, AND THE ENGINEER. TESTING REQUIREMENTS ARE TO BE IN ACCORDANCE WITH THE OWNER/OPERATOR'S SPECIFICATIONS AND REQUIREMENTS. ALL TEST RESULTS SHALL BE PROVIDED (PASSING AND FAILING) ON A REGULAR AND IMMEDIATE BASIS. CONTRACTOR SHALL PROVIDE TESTING SERVICES THROUGH A FLORIDA LICENSED GEOTECHNICAL ENGINEERING FIRM ACCEPTABLE TO THE OWNER AND ENGINEER.

EARTHWORK QUANTITIES

THE CONTRACTOR SHALL PERFORM HIS OWN INVESTIGATIONS AND CALCULATIONS AS NECESSARY TO ASSURE HIMSELF OF EARTHWORK QUANTITIES. THERE IS NO IMPLICATION THAT EARTHWORK BALANCES AND THE CONTRACTOR SHALL BE RESPONSIBLE FOR ANY IMPORT FILL NEEDED, OR FOR REMOVAL AND DISPOSAL OF EXCESS MATERIALS.

EROSION CONTROL

EROSION AND SILTATION CONTROL MEASURES ARE TO BE PROVIDED AND INSTALLED PRIOR TO COMMENCEMENT OF CONSTRUCTION. THESE MEASURES ARE TO BE INSPECTED BY THE CONTRACTOR ON A REGULAR BASIS AND ARE TO BE MAINTAINED OR REPAIRED ON AN IMMEDIATE BASIS, AS REQUIRED. REFER TO ST. JOHNS RIVER WATER MANAGEMENT DISTRICT PERMIT FOR ADDITIONAL REQUIREMENTS FOR EROSION CONTROL AND SURFACE DRAINAGE.

WETLAND PROTECTION

THE LIMITS OF THE ON-SITE WETLANDS HAVE BEEN PROVIDED TO THE CONTRACTOR ON THE CONSTRUCTION PLANS OR ON PERMIT MATERIALS. THE WETLANDS AREAS ARE TO BE PROTECTED FROM DISTURBANCE AT ALL TIMES. CONTRACTOR SHALL PROVIDE EROSION, SILTATION, AND DIVERSION MEASURES PRIOR TO COMMENCEMENT OF CONSTRUCTION. THE CONTRACTOR SHALL OBTAIN A COPY OF EACH PERMIT RELATING TO WETLANDS AND ADHERE TO ALL PROVISIONS AND CONDITIONS THERETO.

PORT ORANGE FORCE MAIN NOTES

OWNER/OPERATOR

WHERE THE UTILITY WILL OWN, OPERATE AND MAINTAIN THE FORCE MAIN CONSTRUCTION, THE CONTRACTOR SHALL BE EXPECTED TO MEET ALL THE REQUIREMENTS OF THE UTILITY AND JURISDICTIONAL AGENCIES.

MATERIALS

SANITARY SEWER FORCE MAIN SHALL BE POLYVINYL CHLORIDE PLASTIC PIPE (PVC) AND SHALL CONFORM TO ASTM D2241 PLASTIC PIPE (SD PR & CLASS T), ASTM 1784, TYPE I, 2000 PSI DESIGN STRESS. THE PIPE SHALL BE ANSI/AWWA C900 WITH MARKINGS ON EACH SECTION SHOWING CONFORMANCE WITH THE ABOVE SPECIFICATION. JOINTS SHALL BE OF THE PUSH ON TYPE AND COUPLINGS CONFORMING TO ASTM D3139 DR18 PIPE.

PORT ORANGE FORCE MAIN NOTES

COMPACT FITTINGS FOR FORCE MAIN SHALL BE MECHANICAL JOINT, DUCTILE IRON CONFORMING TO ANSI/AWWA C143/A21.53 (LATEST EDITION) 350 PSI MINIMUM PRESSURE RATING. FITTINGS SHALL BE POLYETHYLENE LINED (MIN. 30 MILS CONFORMING TO ASTM D-1248).

ALL PLUGS, CAPS, TEES, VALVES, BENDS, ETC., SHALL BE RESTRAINED JOINTS OR THRUST BLOCKED (RESTRAINED JOINTS PREFERRED) PER UTILITY DETAILS. THREE FOOT MINIMUM COVER OVER FORCE MAIN.

STANDARD PLUG VALVES SHALL BE MANUFACTURED BY DEZURIK CORP., PRATT, DRESSER, HOMESTEAD INDUSTRIES, OR APPROVED EQUAL.

VALVES SHALL BE FURNISHED WITH REPLACEABLE CHEVRON PACKING, CAPABLE OF BEING REPACKED WITH THE LINE UNDER PRESSURE.

VALVES 4 INCHES IN DIAMETER AND SMALLER SHALL BE WRENCH NUT OPERATED. VALVES LARGER THAN 4 INCHES SHALL BE WORM GEAR OPERATED.

VALVE BOX PADS SHALL BE 4" THICK CONCRETE WITH #4 REINFORCING BARS. PAD IS TO BE SET AT FINISH GRADE.

MAXIMUM LENGTH BETWEEN VALVES SHALL BE 1000 LINEAR FEET. UNDERGROUND VALVE IDENTIFICATION (UVI) MARKERS SHALL BE PROVIDED AT EACH VALVE LOCATION. MARKERS SHALL BE 3" DIA. 1/8" THICK SOLID HARD BRASS WITH 1/4" ROD ANCHOR WITH "TAMPER-PROOF" HOOK END. SURFACE SHALL BE ENGRAVED WITH 1/4" TO 3/8" CAPITAL LETTERS APPROXIMATELY .015" DEPTH – HAND PUNCHED LETTERS NOT ACCEPTABLE. FOR MARKER TEXT, REFER TO UNDERGROUND VALVE MARKER DETAIL. SURFACE GROUND SMOOTH AND EPOXY COATED TO PREVENT TARNISHING. MARKERS ARE TO BE WAGCO MARKERS, OR APPROVED EQUAL.

UVI MARKERS SHALL BE INSTALLED IN THE VALVE PAD IN UNPAVED AREAS, IN CONCRETE ADJACENT TO VALVE BOX COVER IN SIDEWALK OR DRIVEWAY AREAS, AND IN CONCRETE CURB ADJACENT TO VALVE IN PAVED AREAS. UVI'S PLACED IN CURB FOR VALVES IN PAVED AREAS SHALL BE INSTALLED WITH THE SAME LOCATION ARRANGEMENT AS THE VALVES. (REFER TO PLACEMENT DETAIL.)

AIR RELEASE VALVE DESIGNED FOR SEWAGE SERVICE SHALL BE INSTALLED IN THE TOPS OF PIPES AS INDICATED ON THE DRAWINGS. VALVES SHALL BE DESIGNED TO PERMIT MANUAL RELEASE OF AIR FROM AN EMPTY PIPE DURING FILLING AND SHALL BE CAPABLE OF DISCHARGING ACCUMULATED AIR IN THE LINE WHILE THE LINE IS IN OPERATION AND UNDER PRESSURE. VALVES SHALL BE CAPABLE OF WITHSTANDING OPERATING PRESSURES OF 150 PSI. VALVES SHALL BE VENTED TO THE ATMOSPHERE. THE VALVES SHALL BE ARI OR APPROVED EQUAL.

CHECK VALVES SHALL BE OF THE WEIGHT AND LEVER TYPE, RESILIENT DISC, GRAY IRON, AND BRONZE TRIM, HORIZONTAL MOUNTED. VALVES SHALL BE MANUFACTURED IN ACCORDANCE WITH AWWA C508 WITH FLANGED CONNECTIONS. VALVES SHALL HAVE A WORKING PRESSURE OF 200 PSI FOR VALVES 2"-12". VALVES SHALL BE DEZURIK, MUELLER, OR APPROVED EQUAL.

CONSTRUCTION METHODS

TRENCHING SHALL BE IN ACCORDANCE WITH THE TRENCHING DETAILS PROVIDED ON THE CONSTRUCTION PLANS.

COMPACTED BACKFILL FOR ALL PIPES SHALL BE TO 98% MAXIMUM DENSITY AS DETERMINED BY AASHTO T-180 FOR UNDER ROADWAYS. OTHER COMPACTION OF BACKFILL SHALL BE TO THE 95% MAXIMUM DENSITY AS DETERMINED BY AASHTO T-180.

INSTALLATION OF THE SANITARY SEWER FORCE MAIN SHALL BE IN CONFORMANCE WITH ASTM D2774-72 (LATEST EDITION).

MINIMUM COVER OVER ALL PIPES SHALL BE 36" FROM TOP OF PIPE TO FINISHED GRADE. SEE PLAN AND PROFILE SHEETS FOR REQUIRED DEPTH.

THE FORCE MAIN SHALL BE INSTALLED AS NOTED ON THE PLANS. WHERE APPLICABLE, A HORIZONTAL SEPARATION OF AT LEAST 10' SHALL BE MAINTAINED BETWEEN WATER AND SEWER LINES. WHEN WATER AND SEWER LINES CROSS WITH LESS THAN AN 18" VERTICAL SEPARATION, THE PVC SEWER LINE SHALL BE ENCASED IN CONCRETE OR DUCTILE IRON PIPE USED IN LIEU OF PVC PIPE FOR A DISTANCE OF 10' EITHER SIDE OF THE CROSSING.

ALL PLUGS, CAPS, TEES, BENDS, VALVES, ETC., SHALL BE PROVIDED WITH RESTRAINED JOINTS OR THRUST BLOCKS (RESTRAINED JOINTS PREFERRED). FOR THRUST BLOCK OR RESTRAINED JOINT CONSTRUCTION DETAILS, REFER TO THE UTILITY DETAILS AND TABLES.

GREEN INDICATOR TAPE SHALL BE BURIED IN THE FORCE MAIN TRENCH 18" DIRECTLY ABOVE THE FORCE MAIN. A CONTINUOUS COPPER DETECTOR WIRE SHALL BE ATTACHED TO THE PIPE AND VALVES WITH VINYL TIE STRAPS UTILITY DETAILS.

CONNECTIONS TO MANHOLES WITH FORCE MAINS SHALL BE MADE BY CORE BORE AND LINK SEAL OR OTHER APPROVED CONNECTION. CONNECTIONS SHALL BE MADE WATERTIGHT AND BE INSTALLED ACCORDING TO THE MANUFACTURERS' RECOMMENDATIONS.

TESTING

FORCE MAIN SHALL BE PRESSURE AND LEAKAGE TESTED IN ACCORDANCE WITH AWWA STANDARD M23. FORCE MAIN SYSTEM SHALL BE TESTED FOR TWO (2) HOURS AT 100 PSI. THE CONTRACTOR SHALL PROVIDE SEVENTY-TWO (72) HOURS WRITTEN ADVANCE NOTIFICATION TO THE UTILITY AND THE ENGINEER. NO TESTING ON MONDAY OR FRIDAY. THE CONTRACTOR SHALL PERFORM SATISFACTORY PRETESTING PRIOR TO NOTIFICATION.

AS-BUILT DRAWINGS

THE CONTRACTOR SHALL PROVIDE VERTICAL AND HORIZONTAL "AS-BUILT" INFORMATION RELATIVE TO ALL CONSTRUCTED UTILITIES AND STRUCTURES.

AS-BUILT INFORMATION FOR THE FORCE MAIN SHALL INCLUDE, BUT NOT BE LIMITED TO, THE FOLLOWING

1. LOCATION OF ALL VALVES, FITTINGS, ETC.
2. LOCATION OF THE FORCE MAIN TIED HORIZONTALLY TO THE BACK OF CURB OR EDGE OF PAVEMENT.
3. CERTIFICATION AS TO THE SYSTEM MEETING THE MINIMUM COVER REQUIREMENTS.
4. HORIZONTAL AND VERTICAL DATA FOR ANY CONSTRUCTION WHICH DEVIATES FROM THE APPROVED ENGINEERING DRAWINGS.
5. ASSET TABLES ARE REQUIRED USING FLORIDA STATE PLANE NORTHING & EASTING FOR ALL MAINS AT 100' INTERVALS AND VALVES.

PORT ORANGE POTABLE WATER/FIRE SYSTEMS NOTES

OWNER/OPERATOR

WHERE THE UTILITY WILL OWN, OPERATE AND MAINTAIN THE WATER SYSTEM, THE CONTRACTOR SHALL BE EXPECTED TO MEET ALL THE REQUIREMENTS OF THE UTILITY AND JURISDICTIONAL AGENCIES.

PIPE MATERIALS

POLYVINYL CHLORIDE PLASTIC PIPE (PVC) 4" THROUGH 12" SHALL BE MANUFACTURED IN ACCORDANCE WITH ANSI/AWWA C900 (LATEST EDITION) AND SHALL HAVE A MINIMUM WORKING PRESSURE OF 150 PSI AND HAVE A DR (DIMENSION RATIO) OF 18. PVC PIPES LESS THAN 4" SHALL BE SCHEDULE 40 CONFORMING TO ASTM D1785. ALL PVC PIPE SHALL BEAR THE NSF LOGO FOR POTABLE WATER. JOINTS SHALL BE OF THE PUSH-ON TYPE AND COUPLINGS CONFORMING TO ASTM D3139 DR18 PIPE.

DUCTILE IRON PIPE (DIP) SHALL BE STANDARD PRESSURE CLASS 350 IN SIZES 4" THROUGH 12" AND CONFORM TO ANSI/AWWA C150/A21.50 (LATEST EDITION). ALL DUCTILE IRON PIPE SHALL HAVE A STANDARD THICKNESS OF CEMENT MORTAR LINING AS SPECIFIED IN ANSI/AWWA C104/A21.4 (LATEST EDITION). PIPE JOINTS SHALL BE OF THE PUSH-ON RUBBER GASKET TYPE CONFORMING TO ANSI/AWWA C111/A21.11 (LATEST EDITION).

PIPE SIZES GREATER THAN 12" IN BOTH PVC AND DUCTILE IRON SHALL BE SEPARATELY SPECIFIED ON THE PLANS; WITH THICKNESS CLASSES TO BE SHOWN BASED ON WORKING PRESSURES, PIPE DEPTH AND TRENCH CONDITIONS.

FITTINGS FOR DUCTILE IRON PIPE AND PVC C900 PIPE SIZES 3' – 48" SHALL BE DUCTILE IRON AND SHALL CONFORM TO ANSI/AWWA C110/A21.10 (LATEST EDITION) AND SHALL BE CEMENT LINED IN CONFORMANCE WITH ANSI/AWWA C104/A21.4 (LATEST EDITION).

COMPACT FITTINGS FOR DUCTILE IRON PIPE AND PVC C900 PIPE SIZES 3' – 24" SHALL BE DUCTILE IRON CLASS 350 AND SHALL CONFORM TO ANSI/AWWA C153/A21.53 (LATEST EDITION) AND SHALL BE CEMENT LINED IN CONFORMANCE WITH ANSI/AWWA C104/A21.4 (LATEST EDITION).

POLYETHYLENE WRAP USED FOR CORROSION PREVENTION ON DUCTILE IRON PIPE SHALL CONFORM TO THE REQUIREMENTS OF ANSI/ASTM D1248. THE MINIMUM NOMINAL THICKNESS SHALL BE 0.008 IN. (8 MILS). INSTALLATION OF POLY WRAP SHALL BE IN ACCORDANCE WITH AWWA C105.

VALVES

GATE VALVES SHALL BE RESILIENT SEAT AND SHALL CONFORM TO ANSI/AWWA C509. (LATEST EDITION) WITH HANDWHEEL OR WRENCH NUT, EXTENSION STEMS AND OTHER APPURTENANCES AS REQUIRED. MANUFACTURER'S CERTIFICATION OF THE VALVES' COMPLIANCE WITH AWWA SPECIFICATION C509 AND TESTS LISTED THEREIN WILL BE REQUIRED. VALVES SHALL BE CLOW, MUELLER, KENNEDY, AMERICAN, OR APPROVED EQUAL.

PORT ORANGE POTABLE WATER/FIRE SYSTEMS NOTES

FIRE HYDRANTS

FIRE HYDRANTS SHALL CONFORM TO AWWA C502 (LATEST EDITION) AND SHALL BE FURNISHED COMPLETE WITH WRENCH AND OTHER APPURTENANCES. MANUFACTURER'S CERTIFICATION OF COMPLIANCE WITH AWWA C502 AND TESTS LISTED THEREIN WILL BE REQUIRED. ALL HYDRANTS SHALL BE OF BREAKABLE TYPE, WITH THE BREAKABLE SECTION LOCATED SLIGHTLY ABOVE THE FINISH GROUND LINE. HYDRANTS SHALL CONTAIN TWO, TWO AND ONE-HALF INCH (2-1/2") HOSE CONNECTIONS, AND ONE, FOUR AND ONE-HALF INCH (4-1/2") STEAMER CONNECTIONS WITH NATIONAL STANDARD FIRE HOSE COUPLING SCREW THREADS, FIVE AND ONE-QUARTER INCH (5- 1/4") VALVE OPENING, SIX INCH (6") DIAMETER MECHANICAL JOINT INLET, ONE AND ONE-HALF INCH (1-1/2") PENTAGON OPERATING NUT. SHALL OPEN COUNTERCLOCKWISE, SHALL BE PAINTED IN CONFORMANCE WITH LOCAL FIRE DEPARTMENT REQUIREMENTS (COLORS BASED ON DELIVERED FIRE FLOW) WITH THE PRIMER PAINT BEING KOPPER'S "GLAMORTEX" NO. 622 RUST PRIMER, AND THE FINISH BEING KOPPER'S "GLAMORTEX" AND SHALL BE AMERICAN DARLING B-84-B, NO SUBSTITUTES.

1. BLUE PAVEMENT REFLECTORS (RPM'S) SHALL BE PLACED IN THE CENTERLINE OF THE DRIVING LANE DIRECTLY IN FRONT OF EACH FIRE HYDRANT.
2. CONTRACTOR SHALL PROVIDE A POST-CONSTRUCTION FIRE FLOW TEST WITNESSED AND APPROVED BY THE ENGINEER, OWNER/OPERATOR AND LOCAL FIRE OFFICIAL.
3. THERE SHALL BE NO TREES, SHRUBS, ETC., PLANTED AROUND THE FIRE HYDRANTS OR IN AREAS DESIGNATED AS FIRE LANES.

WATER SERVICES

UNLESS OTHERWISE NOTED IN THE PLANS, THE UTILITY COMPANY SHALL PROVIDE AND INSTALL WATER METERS. CONTRACTOR SHALL CONSTRUCT WATER SERVICE THROUGH THE CURB STOP AS SHOWN ON THE CONSTRUCTION PLANS.

POLYETHYLENE (PE) PRESSURE PIPE FOR WATER SERVICES 3/4" THROUGH 2" SHALL BE ENDOT, ENDOPURE, BLUE PIPE, AND CONFORM TO AWWA C901 (LATEST EDITION), MIN 200 PSI.

ALL WATER SERVICES SHALL INCLUDE THE FOLLOWING: CURB STOPS, 'U' BRANCHES, AND UNIONS AS REQUIRED, PE SERVICE PIPE, CORPORATION STOPS AND METER BOX. THE SERVICE SHALL BE COMPLETE THROUGH THE CURB STOP, AND SHALL BE OF THE TYPE REQUIRED FOR COMPATIBILITY WITH THE SERVICE LINES SPECIFIED, AND FITTINGS SHALL BE AS MANUFACTURED BY THE MUELLER CORPORATION OR FORD. METER BOX SHALL BE BURIED TO FINISH GRADE. SINGLE METER BOXES ONLY. NO JUMBO BOXES.

THE CONTRACTOR SHALL STAMP "W" IN THE CURB TOP AT EACH WATER SERVICE AND A "V" AT ALL VALVE LOCATIONS. STAMPED W'S AND V'S SHALL BE HIGHLIGHTED WITH OIL BASE BLUE PAINT (NO MARKING PAINT). SAW CUTS ARE NOT PERMISSABLE.

PIPE INSTALLATION

PIPE INSTALLATION OF PVC WATER MAIN SHALL BE IN CONFORMANCE WITH ASTM D2774 (LATEST EDITION). INSTALLATION OF DUCTILE IRON PIPE WATER MAIN SHALL BE IN CONFORMANCE WITH AWWA C600.87.

COMPACTED BACKFILL SHALL BE TO 98% MAXIMUM DENSITY AS DETERMINED BY AASHTO T-180 UNDER ALL PAVEMENTS WITH 12" MAXIMUM LIFT THICKNESS. OTHER COMPACTION OF BACKFILL SHALL BE TO 95% MAXIMUM DENSITY AS DETERMINED BY AASHTO T-180 WITH 12" MAXIMUM LIFT THICKNESS. SEE PIPE TRENCHING DETAILS.

MINIMUM COVER OVER ALL PIPES SHALL BE 36" FROM TOP OF PIPE TO FINISHED GRADE. SEE PLAN AND PROFILE SHEETS FOR REQUIRED DEPTH.

WATER MAINS ARE TO BE INSTALLED SO AS TO PROVIDE A MINIMUM VERTICAL SEPARATION OF 18" AND A MINIMUM HORIZONTAL SEPARATION OF 10 FEET FROM ALL SANITARY HAZARDS, INCLUDING STORM DRAINAGE PIPES AND STRUCTURES, AS WELL AS SEPTIC TANKS, DRAIN FIELDS AND SEWER PIPING. IF MINIMUM SEPARATION CANNOT BE ACHIEVED, THEN THE WATER MAIN SHALL BE DUCTILE IRON OR CONCRETE ENCASED FOR A DISTANCE OF 10 FEET EITHER SIDE OF THE CROSSING. WATER MAIN SHALL BE ENCASED IF WATER/STORM CROSSING; OR, THE SEWER MAIN ENCASED IF A SANITARY SEWER/WATER CROSSING.

ALL PLUGS, CAPS, TEES, BENDS, FIRE HYDRANTS, VALVES, ETC., SHALL BE PROVIDED WITH THRUST BLOCKS/RODDED RESTRAINTS. FOR THRUST BLOCK AND RESTRAINED JOINT CONSTRUCTION, REFER TO THE UTILITY DETAILS AND TABLES.

PIPE IDENTIFICATION

BLUE INDICATOR TAPE SHALL BE BURIED IN THE WATER MAIN TRENCH 18" DIRECTLY ABOVE THE WATER MAIN. A CONTINUOUS COPPER DETECTOR WIRE WITH VINYL TIE STRAPS SHALL BE ATTACHED AS SHOWN ON THE PIPE DETECTOR WIRE MARKER DETAIL.

DISINFECTION AND TESTING

ALL PIPES SHALL BE DISINFECTED IN ACCORDANCE WITH AWWA STANDARD C651 (LATEST EDITION).

NO ALLOWABLE LEAKAGE FOR PVC PRESSURE MAINS.

THE CONTRACTOR SHALL PROVIDE AT HIS OWN EXPENSE ALL NECESSARY TEST PUMPING EQUIPMENT, WATER, WATER METERS, PRESSURE GAUGES, AND OTHER EQUIPMENT, MATERIAL AND FACILITIES REQUIRED FOR ALL HYDROSTATIC AND LEAKAGE TESTING. CONTRACTOR SHALL CONTACT THE UTILITY AND ENGINEER IN WRITTEN FORM, SEVENTY-TWO (72) HOURS IN ADVANCE OF PROPOSED TESTING. THE CONTRACTOR SHALL PERFORM SATISFACTORY PRETESTING PRIOR TO NOTIFICATION. NO TESTING WILL BE SCHEDULED ON A MONDAY OR FRIDAY.

THE WATER SYSTEM SHALL BE TESTED FOR LEAKAGE AT 150 PSI FOR TWO (2) HOURS, WITH ALLOWABLE LEAKAGE IN ACCORDANCE WITH AWWA STANDARD C600 (LATEST EDITION). THERE SHALL BE NO WORK OR ACTIVITY DURING PRESSURE TEST.

CONTRACTOR SHALL OBTAIN A COPY OF THE FDEP WATER SYSTEM PERMIT AND PULL BACTERIOLOGICAL TEST SAMPLES FROM THE SAMPLE POINTS SPECIFIED IN THAT PERMIT. TESTING SHALL BE PERFORMED IN THE FOLLOWING ORDER:

1. PRESSURE TEST 3. DISINFECTION
2. FULL BORE FLUSH 4. BACTERIOLOGICAL SAMPLES

CONNECTIONS TO EXISTING WATER MAINS

PRIOR TO THE CONNECTION TO ANY EXISTING MAIN, THE PROPOSED WATER MAIN SHALL BE DISINFECTED, HAVE ENGINEER APPROVED PRESSURE TESTING AND HAVE FDEP CLEARANCE. REFER TO FDEP PERMIT FOR ANY ADDITIONAL REQUIREMENTS.

PORT ORANGE POTABLE WATER/FIRE SYSTEMS NOTES

AS-BUILT DRAWINGS

THE CONTRACTOR SHALL PROVIDE VERTICAL AND HORIZONTAL "AS-BUILT" INFORMATION RELATIVE TO ALL CONSTRUCTED UTILITIES AND STRUCTURES.

AS-BUILT INFORMATION FOR THE WATER SYSTEM SHALL INCLUDE, BUT NOT BE LIMITED TO, THE FOLLOWING:

1. LOCATION OF ALL VALVES, FITTINGS, HYDRANTS AND SERVICES.
2. LOCATION OF THE WATER MAIN TIED HORIZONTALLY TO THE BACK OF CURB OR EDGE OF PAVEMENT.
3. CERTIFICATION AS TO THE SYSTEM MEETING THE MINIMUM COVER REQUIREMENTS.
4. HORIZONTAL AND VERTICAL DATA FOR ANY CONSTRUCTION WHICH DEVIATES FROM THE APPROVED ENGINEERING PLANS.
5. ASSET TABLES ARE REQUIRED USING FLORIDA STATE PLANE NORTHING & EASTING FOR ALL MAINS AT 100' INTERVALS, ARVS, VALVES, SERVICES AND HYDRANTS.

No.	REVISIONS	DATE	BY

Kimley»Horn

© 2024 KIMLEY-HORN AND ASSOCIATES, INC.

1530 CORNERSTONE BLVD, BUILDING 1, SUITE 200A,
DAYTONA BEACH, FL 32117
PHONE: 407-898-1511
WWW.KIMLEY-HORN.COM CA 00035106

KHA PROJECT	049204106
DATE	08/16/2024
SCALE	AS SHOWN
DESIGNED BY	CAB
DRAWN BY	BDB
CHECKED BY	NEM

LOWES LIFT STATION MODIFICATIONS

PREPARED FOR
CITY OF PORT ORANGE

LICENSED PROFESSIONAL

NICOLE E. MCCONNELL

FL LICENSE NUMBER
73789

DATE:

LIFT STATION

GENERAL NOTES

SHEET NUMBER

G2

This document, together with the concepts and designs presented herein, as an instrument of service, is intended only for the specific purpose and client for which it was prepared. Reuse of and improper reliance on this document without written authorization and adaptation by Kimley-Horn and Associates, Inc. shall be without liability to Kimley-Horn and Associates, Inc.

CIVIL SYMBOLS LEGEND

- 93.0 — EXISTING SPOT ELEVATION
- 93.50 — PROPOSED ELEVATION
- 94.00 / 93.50 — PROPOSED TOP OF CURB/ PAVEMENT ELEVATION
- 10 — EXISTING CONTOUR
- 10 — PROPOSED CONTOUR
- PROPOSED STORM PIPE
- PROPOSED GRATE INLET
- PROPOSED CURB INLET
- D — PROPOSED STORM MANHOLE
- EXISTING STORM PIPE
- EXISTING GRATE INLET
- PROPOSED DIRECTION OF SURFACE WATER RUNOFF
- PROPOSED YARD DRAIN

PROCESS PIPING LEGEND (SINGLE-LINE)

- SS — EXISTING SANITARY SEWER
- FM — EXISTING FORCE MAIN
- RW — EXISTING REUSE MAIN
- W — EXISTING WATER MAIN
- UT — EXISTING UNDERGROUND TELE.COMM. LINE
- OHE — EXISTING OVERHEAD LINE
- FOC — EXISTING FIBER OPTIC LINE
- GAS — EXISTING NATURAL GAS LINE
- PROPOSED SANITARY SEWER
- S — PROPOSED SANITARY MANHOLE
- PROPOSED SANITARY SERVICE
- PROPOSED FORCE MAIN

STANDARD ABBREVIATIONS

(A)ARV	(AUTOMATIC) AIR RELEASE VALVE	EJ	EXPANSION JOINT	MTD	MOUNTED	SF	SQUARE FOOT OR FEEET
A/C	AIR CONDITIONING	EL(EV)	ELEVATION	MV	MOTORIZED VALVE	SHT	SHEET(ED)(ING)
A/VV	AIR/VACUUM AIR VALVE	ELAST	ELASTOMERIC	MW	MANWAY	SIM	SIMILAR
AAV	AUTOMATIC AIR VENT	ELL	ELBOW	MWL	MEAN WATER LEVEL	SL	SLUDGE
ABAN	ABANDON(ED)	EMER	EMERGENCY	N	NORTH(ING)	SLV	SLEEVE
ABFV	ACTUATED BUTTERFLY VALVE	EOP	EDGE OF PAVEMENT	N.C.	NORMALLY CLOSED	SM	SHEET METAL
ABRSV	ABRASIVE	EPDM	ETHYLENE PROPYLENE DIENE MONOMER	N.I.C.	NOT IN CONTRACT	SOL	SOLUTION
ABS	ACRYLONITRILE BUTADIENE STYRENE			N.O.	NORMALLY OPEN	SP	SOIL PIPE
AB-xx	AUGER BORING (e.g. AB-1)	EQUIP	EQUIPMENT	N/A	NOT APPLICABLE	SPEC(S)	SPECIFICATION(S)
ACCMP	ASPHALT-COATED CORRUGATED METAL PIPE	EST	ESTIMATE(D)	NaOCl	SODIUM HYPOCHLORITE	SPT-xx	STANDARD PENETRATION TEST BORING (e.g. SPT-1)
		EVA	ELECTRIC VALVE ACTUATOR	NE	NORTHEAST		
ACCV	AIR CUSHION CHECK VALVE	EX(IST)	EXISTING	NF	NANOFILTRATION	SQ	SQUARE
ACP	ASBESTOS CEMENT PIPE	EXP	EXPANSION	NIC	NOT IN CONTRACT	SS	SANITARY SEWER
ADH	ADHESIVE	EXT	EXTERIOR	NO., #	NUMBER	SSE	SUBSTANDARD EFFLUENT
ADJ	ADJUSTABLE	F/F	FACE TO FACE	NOM	NOMINAL	ST	SAMPLE TAP
AFF	ABOVE FINISHED FLOOR	FAB	FABRICATE(D)	NPT	NATIONAL PIPE TAPER	STA	STATION
AFG	ABOVE FINISHED GRADE	FC	FLEXIBLE COUPLING	NPW	NON-POTABLE WATER	STD	STANDARD
AFS	ABOVE FINISHED SLAB	FCA	FLANGED COUPLING ADAPTER	NSFC	NOT SHOWN FOR CLARITY	STL	STEEL
AG	AMMONIA GAS	FCV	FLOW-CONTROL VALVE	NTS,N.T.S.	NOT TO SCALE	STORM	STORMWATER
AIR	AIR PIPE	FD	FLOOR DRAIN	NW	NORTHWEST	STR	STRAIGHT
AL	ALUMINUM	FE	FILTER(ED) EFFLUENT	O&M	OPERATION AND MAINTENANCE	SUP	SUPERNATANT
ALT	ALTERNATE	FF	FINISH FLOOR	O.C.	ON CENTERS	SV	SOLENOID VALVE
AMM	AMMONIATOR	FH	FIRE HYDRANT	O/E	OR EQUAL	SVC	SERVICE
AOD	ANGLE OF DEFLECTION	FIG	FIGURE	O/O	OUTSIDE TO OUTSIDE	SVW	SERVICE WATER
APPROX	APPROXIMATE	FIN	FINISH(ED)	O2	OXYGEN	SW	SOUTHWEST
AS	AMMONIA SOLUTION	FL	FLUORIDE	OD	OUTSIDE DIAMETER	SWD	SIDEWATER DEPTH
ASSY	ASSEMBLY	FLEX	FLEXIBLE	OF	OUTSIDE FACE	SYM	SYMBOL
B/W	BOTH WAYS	FLG	FLANGE(D)	OFF	OFFSET	SYMM	SYMMETRICAL
BCV	BALL CHECK VALVE	FLR	FLOOR	OH	OVER HEAD	T&B	TOP AND BOTTOM
BF	BLIND FLANGE	FM	FORCE MAIN	OP	ORIFICE PLATE	T.O.C.	TOP OF CONCRETE
BFP	BACKFLOW PREVENTER	FO(L)(C)	FIBER OPTIC (LINE)(CONDUIT)	OPER	OPERATOR	T.O.S.	TOP OF SLAB
BFV	BUTTERFLY VALVE	FPM	FEET PER MINUTE	OPP	OPPOSITE	T.S.	TAPPING SLEEVE
BGO	BURIED GEAR OPERATOR	FPS	FEET PER SECOND	OPT	OPTION(AL)	T.V.	TAPPING VALVE
BI	BLACK IRON	FRP	FIBERGLASS REINFORCED PLASTIC	OVF	OVERFLOW	TAN	TANGENT
BIP	BLACK IRON PIPE	FT	FOOT OR FEET	P/L	PROPERTY LINE	TBM	TEMPORARY BENCH MARK
BITUM	BITUMINOUS OR BITUMASTIC	FV	FOOT VALVE	PA	PROCESS AIR	TB-xx	TEST BORING-xx (e.g. TB-1)
BLDG	BUILDING	FW	FINISHED WATER	PBV	PLASTIC BALL VALVE	TDH	TOTAL DYNAMIC HEAD
BM	BENCH MARK	GA	GAUGE	PC	POINT OF CURVE	TEL	TELEPHONE
BOC	BACK OF CURB	GAL	GALLON(S)	PE	PLAIN END	TEMP	TEMPORARY
BOS	BOTTOM OF SLAB	GALV	GALVANIZED	PEP	POLYETHYLENE PIPE	TH	TEST HOLE
BOT	BOTTOM	GBW	GAC BACKWASH	PERM	PERMEATE	THD	THREAD(ED)
BSP	BLACK STEEL PIPE	GIP	GALVANIZED IRON PIPE	PG	PRESSURE GAUGE	THK	THICK(NESS)
BTWN	BETWEEN	GJ	GROOVE JOINT	PGL	PROPOSED GRADE LINE	TJ	TIED JOINT
BV	BALL VALVE	GND	GROUND	PJ	PUSH-ON JOINT	TOB	TOP OF BANK
BW	BUTT WELD	GO	GEAR OPERATED	PM	PROCESS MECHANICAL	TOC	TOP OF CURB
BWW	BACKWASH WATER	GPD	GALLONS PER DAY	PNV	PINCH VALVE	TOS	TOE OF SLOPE
B-xx	BORING (e.g. B-1)	GPH	GALLONS PER HOUR	POB	POINT OF BEGINNING	TS	THICKENED SLUDGE
C&G	CURB AND GUTTER	GPM	GALLONS PER MINUTE	POI	POINT OF INTERSECTION	TV	TELEVISION
C.F.	CUBIC FOOT	GPS	GALLONS PER SECOND	POJ	PUSH-ON JOINT	TWP	TOWNSHIP
C.I.	CUBIC INCH	GR	GRADE	POL	POLYMER	TYP	TYPICAL
C.Y.	CUBIC YARD	GS	GALVANIZED STEEL	PPD	POUNDS PER DAY	UD	UNDERDRAIN
C/C	CENTER TO CENTER	GSP	GALVANIZED STEEL PIPE	PPM	PARTS PER MILLION	UG	UNDERGROUND
CA	COMPRESSED AIR	GSR	GROUND STORAGE RESERVOIR	PREFAB	PREFABRICATED	UGE	UNDERGROUND ELECTRIC
CAP	CAPACITY	GST	GROUND STORAGE TANK	PRES	PRESSURE	UON	UNLESS OTHERWISE NOTED
CATV	CABLE TELEVISION	GV	GATE VALVE	PROP	PROPOSED	UTC	UNDERGROUND TELEPHONE CABLE
CAV	COMBINATION AIR VALVE	HB	HOSE BIBB	PRV	PRESSURE REDUCING VALVE	UTIL	UTILITY
CBP	CHLORINE BOOSTER PUMP	HD	HEAVY-DUTY	PRW	PROCESS WATER	UV	ULTRAVIOLET
CCC	CHLORINE CONTACT CHAMBER	HDD	HORIZ. DIRECTIONAL DRILL	PSF	POUNDS PER SQUARE FOOT	VAC	VACUUM
CE	CHLORINATED EFFLUENT	HDPE	HIGH-DENSITY POLYETHYLENE	PSI	POUNDS PER SQUARE INCH	VAR	VARIES
CFM	CUBIC FEET PER MINUTE	HFA	HYDROFLUOSILICIC ACID	PT	POINT OF TANGENCY	VB	VALVE BOX
CFS	CUBIC FEET PER SECOND	HFCA	HARNESSED FLANGED COUPLING ADAPTER	PV	PLUG VALVE	VC	VERTICAL CURVE
CI	CAST IRON			PVC	POLYVINYL CHLORIDE	VCP	VITRIFIED CLAY PIPE
CIP	CAST IRON PIPE	HORIZ	HORIZONTAL	PVC-D	POLYVINYLCHLORIDE (DOUBLE CONTAINED)	VEL	VELOCITY
CISP	CAST IRON SOIL PIPE	HP	HORSEPOWER			VERT	VERTICAL
CJ	CONSTRUCTION JOINT	HPA	HIGH PRESSURE AIR	PVDF	POLYVINYLIDENE FLUORIDE (KYNAR)	VFD	VARIABLE FREQUENCY DRIVE
CL, ℄	CENTER LINE	HR	HOUR	PVMT	PAVEMENT	VOL	VOLUME
CL2	CHLORINE GAS	HSP	HIGH SERVICE PUMP	PW	POTABLE WATER	VTR	VENT THROUGH ROOF
CLF	CHAIN LINK FENCE	HT	HEIGHT	Q	FLOW	W	WEST
CLR	CLEAR(ANCE)	HVA	HYDRAULIC VALVE ACTUATOR	QTY	QUANTITY	W.L.	WATER LEVEL
CMP	CORRUGATED METAL PIPE	HVAC	HEATING, VENTILATION, AND AIR CONDITIONING	R,RT	RIGHT	W.P.	WALL PIPE (WITH WATER STOP)
CMPA	CORRUGATED METAL PIPE ARCH			R/W, R.O.W.	RIGHT OF WAY	W/	WITH
CO	CLEAN OUT	HW	HOT WATER	RAD., R.	RADIUS	W/O	WITHOUT
CO2	CARBON DIOXIDE	HWL	HIGH WATER LEVEL	RAS	RETURN ACTIVATED SLUDGE	WAS	WASTE ACTIVATED SLUDGE
COAG	COAGULANT	HYD	HYDRAULIC	RAW	RAW WATER	WCO	WALL CLEAN OUT
CONC	CONCENTRATE	ID	INSIDE DIAMETER	RCB	REINFORCED CONCRETE BOX	WF	WIDE FLANGE
CONN	CONNECTION	IN	INCH(ES)	RCP	REINFORCED CONCRETE PIPE	WH	WALL HYDRANT
CONSTR	CONSTRUCT(ION)	INF	INFLUENT	RCPA	REINFORCED CONCRETE PIPE ARCH	WM	WATER MAIN
CONT	CONTINUATION	INV	INVERT	RCW	RECLAIMED WATER	WPR	WORKING PRESSURE
COP	COPPER PIPE	IP	IRON PIPE	REBAR	REINFORCING STEEL	WS(P)	WELDED STEEL (PIPE)
CP	CONCRETE PIPE	IPS	INTERNATIONAL PIPE STANDARD	RED	REDUCER	WT	WEIGHT
CPA	CONCRETE PIPE ARCH	IR	INTERNAL RECYCLE	REEW	REUSE EFFLUENT WATER	WTF	WATER TREATMENT FACILITY
CPLG	COUPLING	IW	IRRIGATION WATER	REF	REFERENCE	WTP	WATER TREATMENT PLANT
CPP	CONCRETE PRESSURE PIPE	JB	JUNCTION BOX	REINF	REINFORCE(D)(ING)(MENT)	WW	WASTEWATER
CPVC	CHLORINATED POLYVINYL CHLORIDE	JT	JOINT	REJ	RO REJECT	WWF	WELDED WIRE FABRIC
CR	CONCENTRIC REDUCER	KGV	KNIFE GATE VALVE	REQ'D	REQUIRED	WWM	WELDED WIRE MESH
CS	CHLORINE SOLUTION	L,LT	LEFT	REW	RETURN EFFLUENT WATER	WWTF	WASTEWATER TREATMENT FACILITY
CV	CHECK VALVE	LAB	LABORATORY	RJ	RESTRAINED JOINT (BELL)	WWTP	WASTEWATER TREATMENT PLANT
CYL	CYLINDER	LAM	LAMINATE OR LAMINATION	RMJ	RESTRAINED MECHANICAL JOINT	XFER	TRANSFER
D	DRAIN	LAT	LATERAL	RNG	RANGE	XLHDPE	CROSS LINKED HIGH-DENSITY POLYETHYLENE
DEG	DEGREE	LB(S)	POUND(S)	RO	REVERSE OSMOSIS		
DEMO	DEMOLITION	LEN	LENGTH	ROC	RADIUS OF CURVATURE	YD	YARD(S)
DF	DIESEL FUEL	LF	LINEAR FEET	RPM	REVOLUTIONS PER MINUTE	YH	YARD HYDRANT
DI	DUCTILE IRON	LHDPE	LINEAR HIGH-DENSITY POLYETHYLENE	RPZBP	REDUCED PRESSURE ZONE BACKFLOW PREVENTER	YR	YEAR(S)
DIA	DIAMETER	LS	LIME SLURRY				
DIAG.	DIAGONAL	LSS	LIME STABILIZED SLUDGE	RR	RAILROAD		
DIM	DIMENSION	LWL	LOW WATER LEVEL	RS	RAW SEWAGE		
DIP	DUCTILE IRON PIPE	MAINT	MAINTAIN OR MAINTENANCE	RW	RECLAIMED WATER		
DIR	DIRECTION	MAN	MANUAL(LY)	RWW	RAW WASTEWATER		
DISCH	DISCHARGE	MAX	MAXIMUM	S	SOUTH		
DJ	DISMANTLING JOINT	MCC	MOTOR CONTROL CENTER	S.F.	SQUARE FOOT		
DMH	DROP MANHOLE	ME(S)	MITERED END (SECTION)	S.I.	SQUARE INCH		
DN	DOWN	MECH	MECHANICAL	S.O.	SIDE OPERATED		
DR	DIMENSION RATIO	MF	MICROFILTRATION	S.STL	STAINLESS STEEL		
DV	DIAPHRAGM VALVE	MFR	MANUFACTURE(R)	S.Y.	SQUARE YARD		
DW	DISINFECTED WATER	MG	MILLION GALLONS	SA	SAMPLE LINE		
DWG	DRAWING	MGD	MILLION GALLONS PER DAY	SAN	SANITARY		
DWV	DRAIN, WASTE, AND VENT	MH	MANHOLE	SB-xx	SOIL BORING (e.g. SB-1)		
E	EAST(ING)	MI	MILE(S)	SCH	SCHEDULE		
E.F.	EACH FACE	MIN	MINIMUM	SCV	SILENT CHECK VALVE		
E.W.	EACH WAY	MISC	MISCELLANEOUS	SD	STORM DRAIN		
EA	EACH	MJ	MECHANICAL JOINT	SDR	STANDARD DIMENSION RATIO		
ECC	ECCENTRIC	ML	MIXED LIQUOR	SE	SOUTHEAST		
EFF	EFFLUENT	MPH	MILES PER HOUR	SEC	SECTION		
EGO	ELEVATED GEAR OPERATOR	MRPP	METAL REINFORCED PLASTIC PIPE	SEFF	SECONDARY EFFLUENT		

NOTE: THIS LEGEND IS FOR GENERAL REFERENCE. NOT ALL ABBREVIATIONS, SYMBOLS, PROCESSES, MATERIALS, OR FITTINGS MAY BE USED IN THIS DESIGN, NOR IS THIS LEGEND COMPREHENSIVE. REFER TO INDIVIDUAL DRAWING LEGEND(S) IF SYMBOLS ARE NOT LISTED. INDIVIDUAL DISCIPLINE STANDARD LEGENDS SUPERCEDE THIS GENERAL LEGEND, IF PROVIDED.

DRAFTING LEGEND

- NOTE (TYP) — ANNOTATION, SINGLE LEADER (INDICATING TYPICAL AT MULTIPLE LOCATIONS)
- NOTE — ANNOTATION, MULTIPLE LEADERS INDICATING DISCRETE TARGETS
- VIEWPORT OR FEATURE BREAK INDICATOR
- VIEW FRAME EXTENT (WITH DRAWING LOCATION REFERENCE)
- SEE SHEET xxx
- STANDARD NORTH ARROW (ROTATED AS REQUIRED)

NORTH — NORTH ARROW

GRAPHIC SCALE IN FEET

0 10 20 40

HORIZONTAL

HALF VIEWPORT SCALE | FULL VIEWPORT SCALE | DOUBLE VIEWPORT SCALE

0 2 4 8

VERTICAL

GRAPHIC SCALE
(HORIZONTAL AND/OR VERTICAL AS REQUIRED)

PROCESS PIPING LEGEND (DOUBLE-LINE OR 3D)

SYMBOL PRIMARY	SYMBOL SECONDARY	DESCRIPTION
		MECHANICAL JOINT FITTINGS
		FLANGED FITTINGS
		SOLVENT WELD FITTINGS
		BUTT-WELD FITTINGS (S.STL SHOWN)
		BALL VALVE (SOLVENT WELD SHOWN)
		GATE VALVE (FLANGED SHOWN)
		PLUG VALVE (FLANGED SHOWN)
		BUTTERFLY VALVE (FLANGED SHOWN, WHEEL OPERATED)
		BUTTERFLY VALVE (WAFER, LEVER OPERATED)

SYMBOL PRIMARY	SYMBOL SECONDARY	DESCRIPTION
		GLOBE CHECK VALVE (FLANGED SHOWN)
		SWING CHECK VALVE (FLANGED SHOWN)
		PIPE COUPLING
		EXPANSION JOINT, FLANGED
		FLOW CONTROL VALVE (FLANGED SHOWN)
		MAGNETIC FLOW METER (FLANGED SHOWN)
		PROPELLER FLOW METER (FLANGED SHOWN)
		V-CONE FLOW METER (FLANGED SHOWN)
		VENTURI FLOW METER (FLANGED SHOWN)

DETAIL/SECTION REFERENCES

SECTION CUT AND DIRECTION TAIL (ROTATED AS REQUIRED)

A / M-2 — OPTIONAL HAT (INDICATES VIEW DIRECTION); DETAIL OR SECTION NUMBER/LETTER; SHEET WHERE DETAIL IS FOUND

SHEET FROM WHERE DETAIL IS FIRST REFERENCED

SECTION OR DETAIL NUMBER/LETTER

A / M-1 — DETAIL, SCALE: N.T.S.

DRAWING WHERE DETAIL IS REFERENCED

No.	REVISIONS	DATE	BY

Kimley»Horn
© 2024 KIMLEY-HORN AND ASSOCIATES, INC.
1530 CORNERSTONE BLVD, BUILDING 1, SUITE 200A,
DAYTONA BEACH, FL 32117
PHONE: 407-898-1511
WWW.KIMLEY-HORN.COM CA 00035106

KHA PROJECT	049204106
DATE	08/16/2024
SCALE	AS SHOWN
DESIGNED BY	CAB
DRAWN BY	BDB
CHECKED BY	NEM

CITY OF PORT ORANGE 1867 FLORIDA

LOWES LIFT STATION MODIFICATIONS

PREPARED FOR
CITY OF PORT ORANGE

LICENSED PROFESSIONAL

NICOLE E. MCCONNELL

FL LICENSE NUMBER
73789

DATE:

LIFT STATION
SYMBOLS AND ABBREVIATION

SHEET NUMBER
G3

GRAPHIC SCALE IN FEET
0 2.5 5 10

NORTH

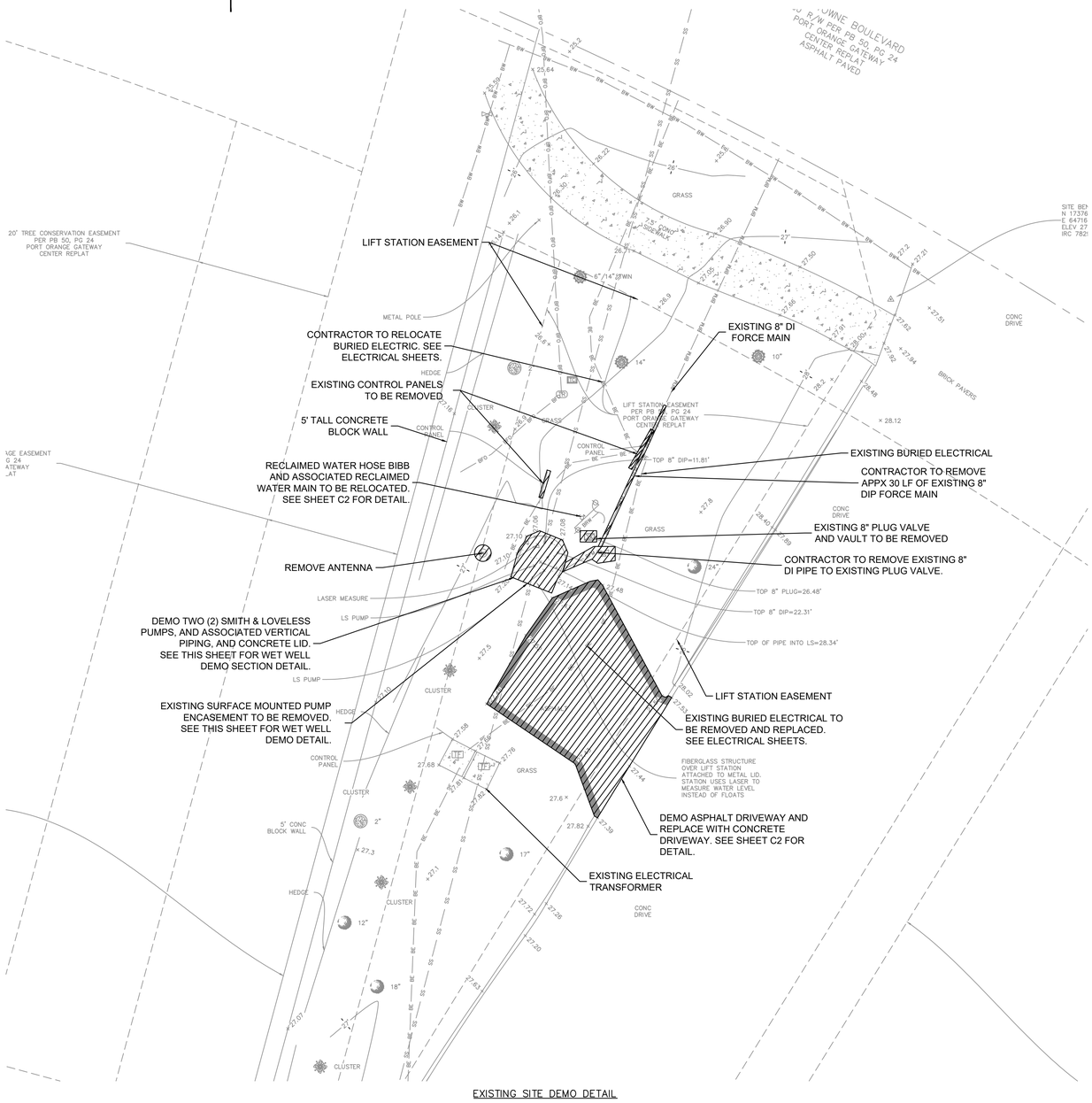

EXISTING SITE DEMO DETAIL

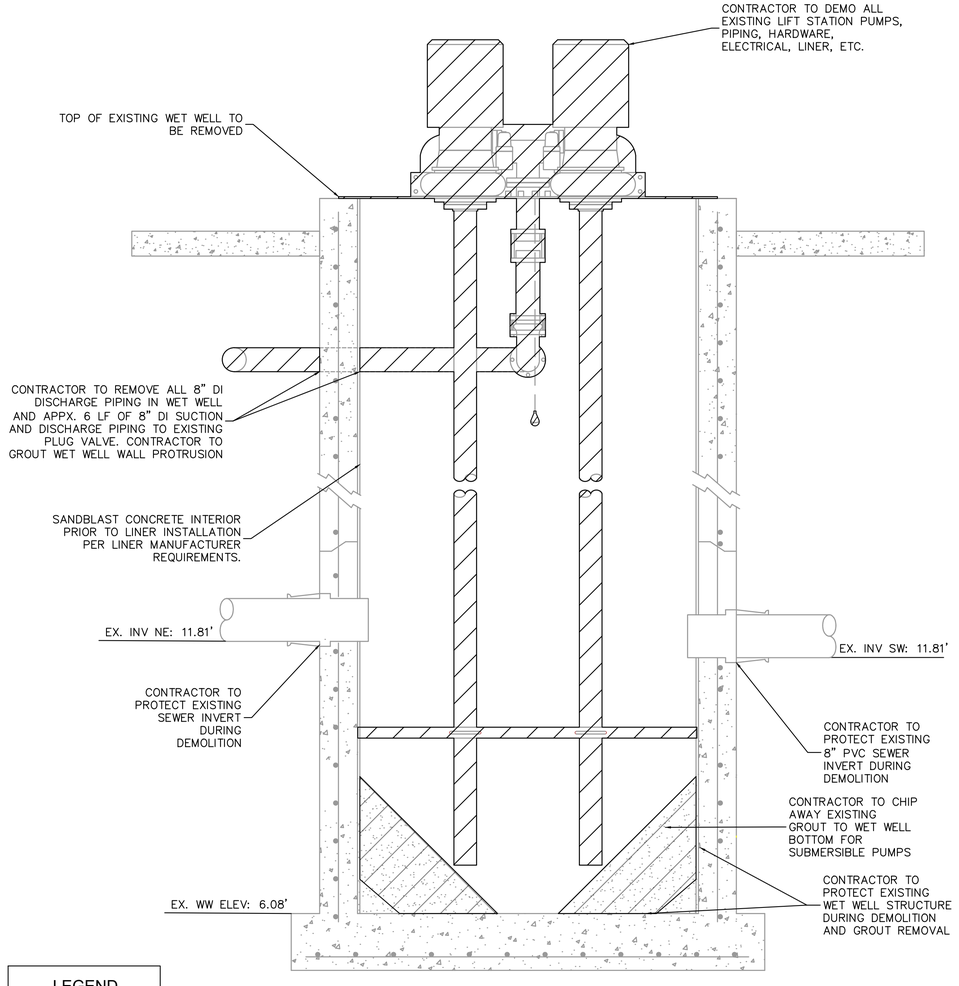

WET WELL DEMO DETAIL
N.T.S
(PIPES ROTATED FOR CLARITY)

LEGEND

LIMITS OF DEMOLITION

CONSTRUCTION NOTES:
1. CONTRACTOR TO FIELD VERIFY ALL EXISTING UTILITIES PRIOR TO CONSTRUCTION.
2. CONTRACTOR TO COORDINATE WITH CITY OF PORT ORANGE PUBLIC WORKS & UTILITIES DEPARTMENT PRIOR TO DEMOLITION.
3. CONTRACTOR TO RESTORE ALL EXISTING SURFACES TO EXISTING CONDITION OR BETTER.
4. CONTRACTOR TO COORDINATE BYPASS FLOWS WITH CITY OF PORT ORANGE PUBLIC WORKS & UTILITIES DEPARTMENT PRIOR TO CONSTRUCTION.

This document, together with the concepts and designs presented herein, as an instrument of service, is intended only for the specific purpose and client for which it was prepared. Reuse of and improper reliance on this document without written authorization and adaptation by Kimley-Horn and Associates, Inc. shall be without liability to Kimley-Horn and Associates, Inc.

No.	REVISIONS	DATE	BY

Kimley»Horn
© 2024 KIMLEY-HORN AND ASSOCIATES, INC.
1530 CORNERSTONE BLVD, BUILDING 1, SUITE 200A,
DAYTONA BEACH, FL 32117
PHONE: 407-898-1511
WWW.KIMLEY-HORN.COM CA 00035160

KHA PROJECT	049204106
DATE	07/08/2024
SCALE	AS SHOWN
DESIGNED BY	CAB
DRAWN BY	BDB
CHECKED BY	NEM

CITY OF PORT ORANGE 1867 FLORIDA

LOWES LIFT STATION MODIFICATIONS

PREPARED FOR
CITY OF PORT ORANGE

LICENSED PROFESSIONAL

NICOLE E. MCCONNELL

FL LICENSE NUMBER
73789

DATE:

DEMOLITION PLAN AND DETAIL

SHEET NUMBER
C1

GRAPHIC SCALE IN FEET
0 2.5 5 10

NORTH

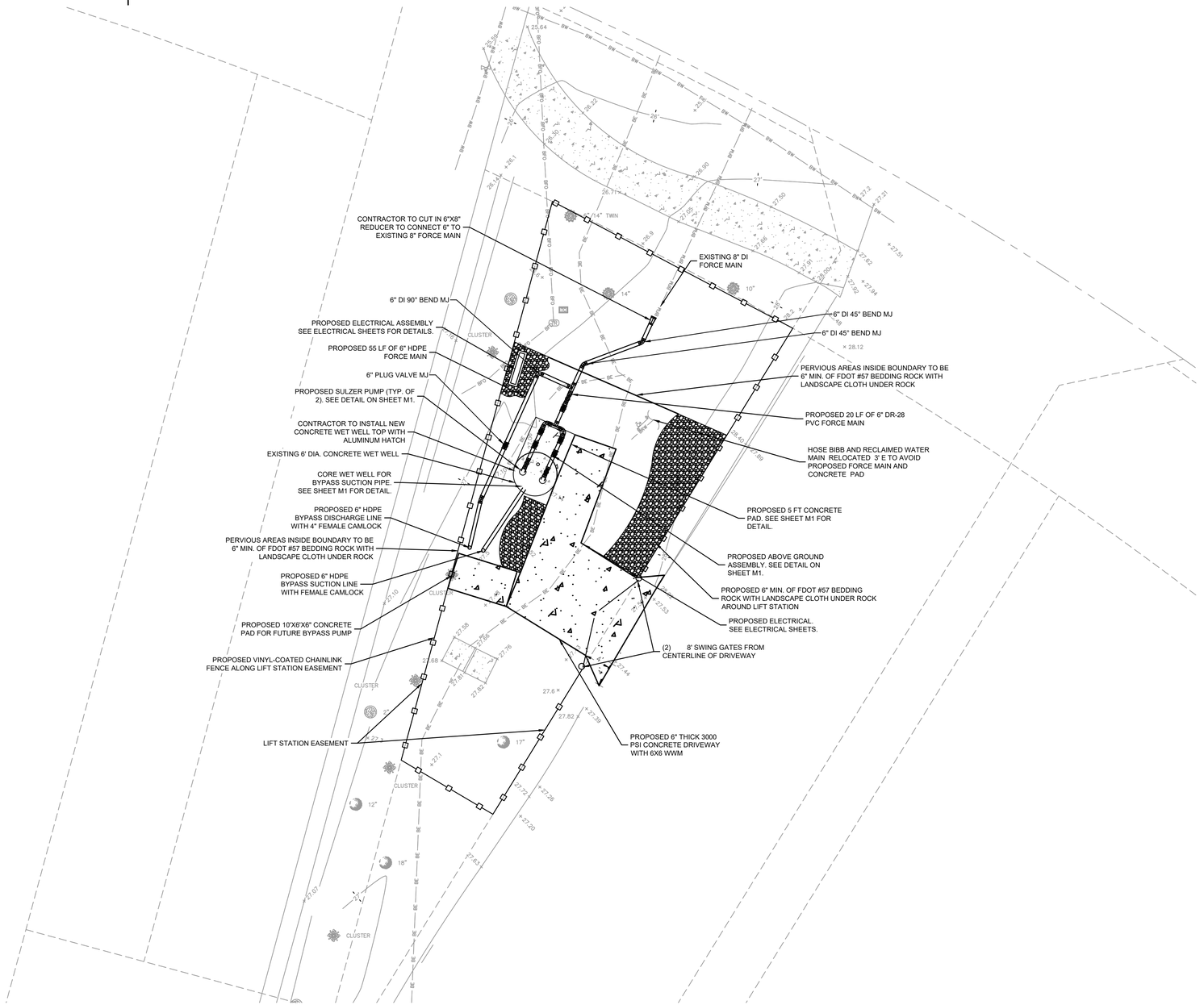

CONSTRUCTION NOTES:
1. CONTRACTOR TO FIELD VERIFY ALL EXISTING UTILITIES PRIOR TO CONSTRUCTION.
2. CONTRACTOR TO COORDINATE WITH CITY OF PORT ORANGE PUBLIC WORKS & UTILITIES DEPARTMENT PRIOR TO FORCE MAIN CONNECTION & START-UP.
3. CONTRACTOR TO RESTORE ALL EXISTING SURFACES TO EXISTING CONDITION OR BETTER.
4. CONTRACTOR TO SET UP AND MAINTAIN BYPASS PUMPING DURING CONSTRUCTION.

This document, together with the concepts and designs presented herein, as an instrument of service, is intended only for the specific purpose and client for which it was prepared. Reuse of and improper reliance on this document without written authorization and adaptation by Kimley-Horn and Associates, Inc. shall be without liability to Kimley-Horn and Associates, Inc.

No.	REVISIONS	DATE	BY

Kimley»Horn
© 2024 KIMLEY-HORN AND ASSOCIATES, INC.
1530 CORNERSTONE BLVD, BUILDING 1, SUITE 200A,
DAYTONA BEACH, FL 32117
PHONE: 407-898-1511
WWW.KIMLEY-HORN.COM CA 00035160

KHA PROJECT	049204106
DATE	07/08/2024
SCALE	AS SHOWN
DESIGNED BY	CAB
DRAWN BY	BDB
CHECKED BY	NEM

LOWES LIFT STATION MODIFICATIONS

PREPARED FOR
CITY OF PORT ORANGE

LICENSED PROFESSIONAL
NICOLE E. MCCONNELL
FL LICENSE NUMBER
73789
DATE:

PROPOSED SITE PLAN

SHEET NUMBER
C2

This document, together with the concepts and designs presented herein, as an instrument of service, is intended only for the specific purpose and client for which it was prepared. Reuse of and improper reliance on this document without written authorization and adaptation by Kimley-Horn and Associates, Inc. shall be without liability to Kimley-Horn and Associates, Inc.

LIFT STATION PLAN
N.T.S.

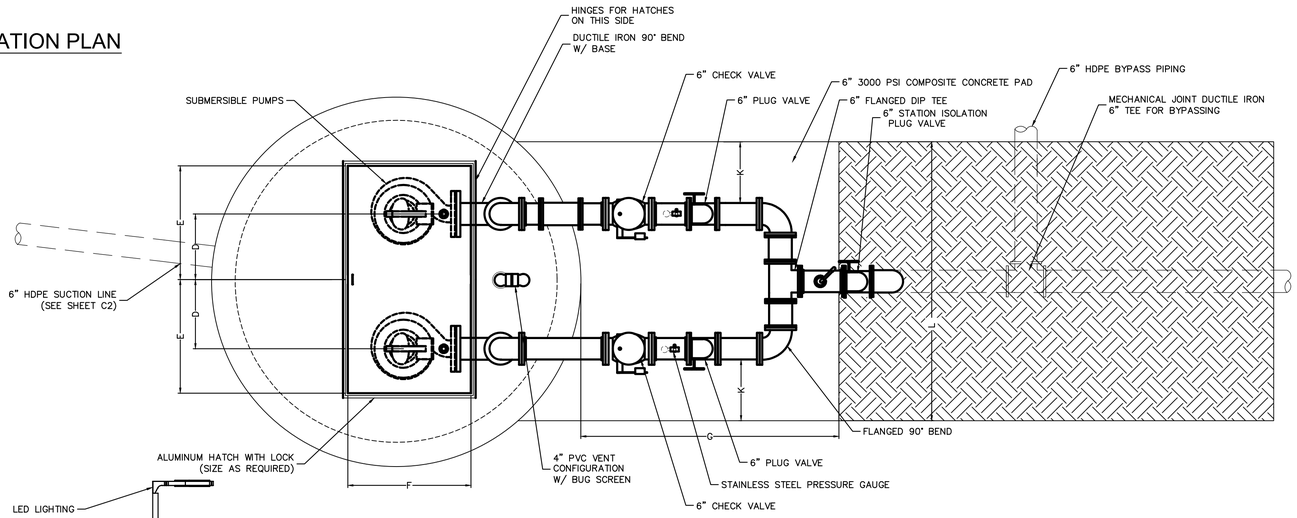

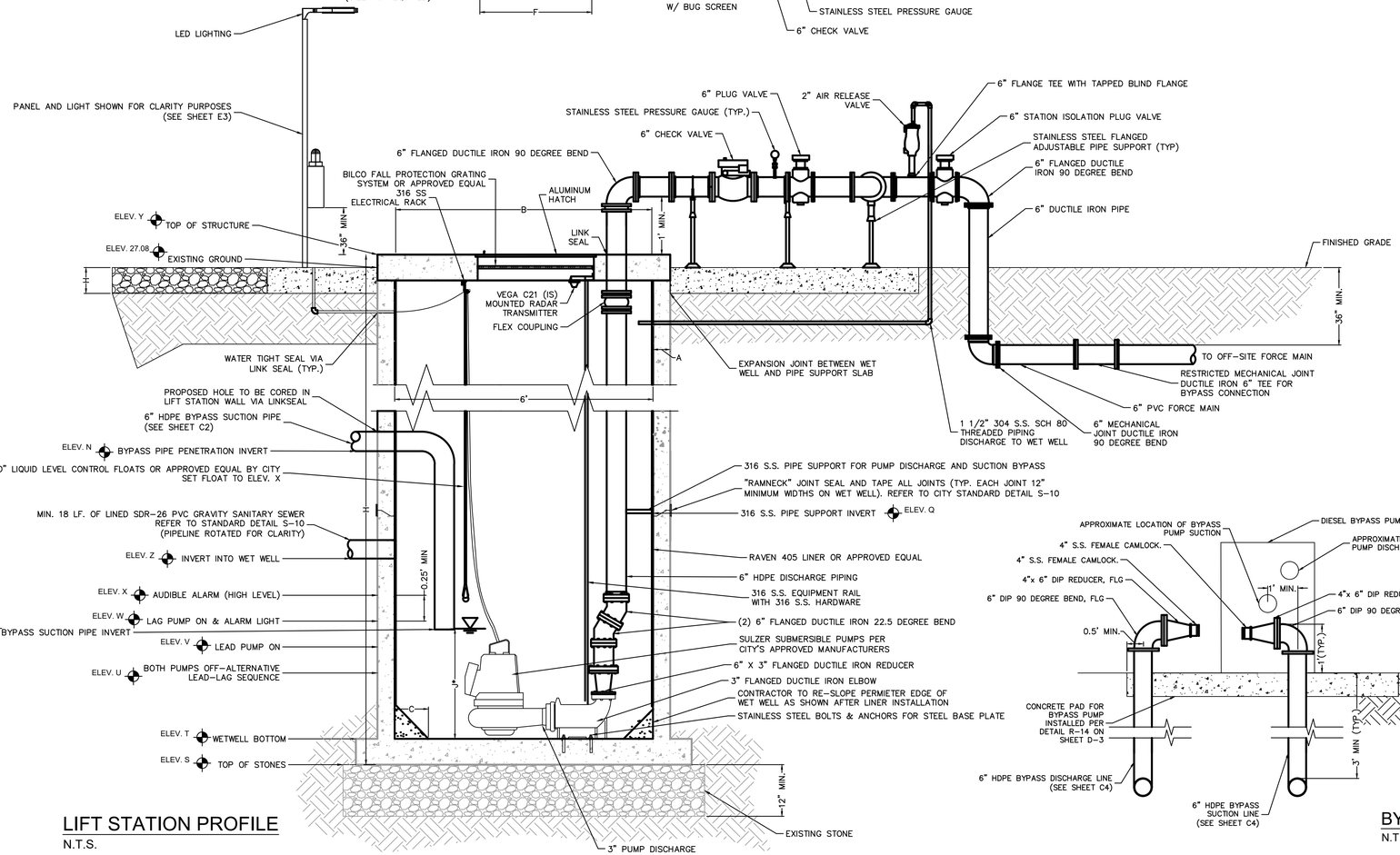

LIFT STATION PROFILE
N.T.S.

PUMPING STATIONS	DIMENSIONS	ELEV. AT CONSTRUCTION	NOTES
DIM A	8"		8" MIN.
DIM B	6'-0"		EXISTING DIA.
DIM C	*		
DIM D	*		
DIM E	24"		24" MIN.
DIM F	48"		48" MIN.
DIM G	5'-0"		5'-0" MIN.
DIM H	21.58'		
DIM J	2.75'		
DIM K	*		2' MIN.
DIM L	*		7.5' MIN
ELEV M	8.75'		
ELEV N	23.58'		3.5' BELOW COVER
ELEV Q	16.5'		
ELEV S	5.50'		EXISTING ELEV.
ELEV T	6.00'		EXISTING ELEV.
ELEV U	8.50'		
ELEV V	11.25'		
ELEV W	11.50'		
ELEV X	11.75'		
ELEV Y	27.56'		
ELEV Z	11.81'		EXISTING ELEV.

* PER PUMP MANUFACTURERS REQUIREMENT
** APPLICABLE TO EXISTING LIFT STATION MODIFICATIONS.
ALL DIMENSIONS TO BE DETERMINED ON A CASE BY CASE BASIS AT THE DISCRETION OF PORT ORANGE PUBLIC WORKS & UTILITIES

GENERAL NOTES:
1. ALL EXPOSED METAL SHALL BE PAINTED WITH 2 COATS OF EXTERIOR EPOXY PAINT.
2. BASE AND FIRST RISER UNIT TO BE PRECAST MONOLITHIC.
3. ALL SURFACES IN WET WELL TO BE LINED WITH CITY OF PORT ORANGE PUBLIC WORKS & UTILITIES. APPROVED MATERIALS.
4. ALL LOCATIONS WHERE PIPES ENTER OR LEAVE THE WET WELL SHALL BE MADE WATERTIGHT WITH WALL SLEEVE OR NON-SHRINK GROUT. ALL ELECTRICAL CONDUITS IN WELL TO BE SEALED.
5. ALL ELECTRIC CONDUCTORS SHALL BE TERMINATED IN A DEMARCATION PANEL. SEALED BETWEEN WET WELL AND CONTROL PANEL. SEAL OFFS SHALL BE SPLIT TYPE SERVICEABLE. THERE SHALL BE NO VALVES OR ELECTRICAL JUNCTION BOXES IN WET WELL.
6. ALL ELECTRICAL CABLES SHALL BE CONTINUOUS TO CONTROL PANEL OR BOX.
7. WET WELL COVER SHALL BE ALUMINUM WITH 316 S.S. HARDWARE AND LOCK BRACKET. SIZE AS REQUIRED BY PUMP MANUFACTURER AND APPROVED BY CITY OF PORT ORANGE PUBLIC WORKS & UTILITIES.
8. FLEXIBLE COUPLING SHALL BE SLEEVE TYPE.'
9. PUMPS SHALL BE:

   MANUFACTURER: SULZER; MODEL: XFP80C-CB1 60HZ; IMP: .4; DIA:180 MM; SPEED: 1751 RPM; DISCHARGE SIZE: 3" IN.; VOLTAGE: 230V; HZ.: 60 Hz; PHASE: 3 Ph; H.P.: 5 hp; MIN. SOLID SIZE: 3.0 IN.; CURVE: 60HZ.

10. OPERATING CONDITIONS SHALL BE 240 GPM AT 36.11 FEET TDH.
11. ALL HARDWARE IN WET WELL TO BE 316 STAINLESS STEEL.
12. DISCHARGE PIPING TO BE 6" MINIMUM.
13. WET WELL HATCH TO OPEN TOWARDS DISCHARGE PIPING.
14. ALL PERVIOUS SURFACES WITHIN CITY OWNED EASEMENT TO HAVE 6" THICK LAYER OF FDOT #57 STONE OVER LAYER OF LANDSCAPE FABRIC.

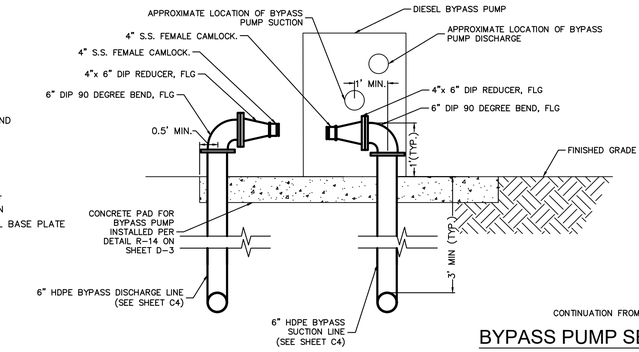

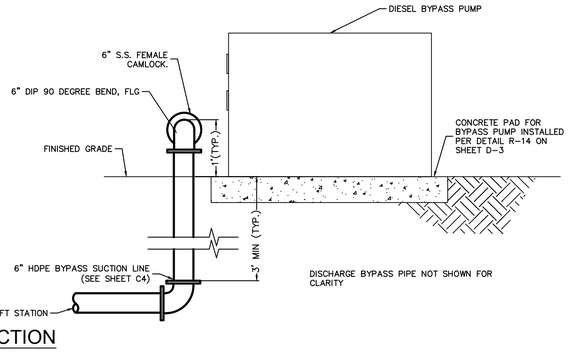

BYPASS PUMP SECTION
N.T.S.

No.	REVISIONS	DATE	BY

Kimley»Horn
© 2024 KIMLEY-HORN AND ASSOCIATES, INC.
1530 CORNERSTONE BLVD, BUILDING 1, SUITE 200A,
DAYTONA BEACH, FL 32117
PHONE: 407-898-1511
WWW.KIMLEY-HORN.COM CA 00035106

KHA PROJECT	049204106
DATE	08/16/2024
SCALE	AS SHOWN
DESIGNED BY	CAB
DRAWN BY	BDB
CHECKED BY	NEM

CITY OF PORT ORANGE 1867 FLORIDA

LOWES LIFT STATION MODIFICATIONS

PREPARED FOR
CITY OF PORT ORANGE

LICENSED PROFESSIONAL
NICOLE E. MCCONNELL
FL LICENSE NUMBER
73789
DATE:

LIFT STATION
LIFT STATION MECHANICAL PLAN

SHEET NUMBER
M1

This document, together with the concepts and designs presented herein, as an instrument of service, is intended only for the specific purpose and client for which it was prepared. Reuse of and improper reliance on this document without written authorization and adaptation by Kimley-Horn and Associates, Inc. shall be without liability to Kimley-Horn and Associates, Inc.

THE CITY'S PUBLIC UTILITIES DEPARTMENT (386) 506-5750 SHALL BE GIVEN A MINIMUM OF 48 HOURS ADVANCE NOTICE (NOT INCLUDING HOLIDAYS OR WEEKENDS) PRIOR TO BEGINNING ANY SANITARY SEWER CONSTRUCTION.

CONSTRUCTION:

1. ALL WORK PERFORMED ON SANITARY SEWER FACILITIES OWNED OR PROPOSED TO BE OWNED BY THE CITY SHALL BE CONSTRUCTED BY AN UNDERGROUND UTILITY CONTRACTOR, OR FLORIDA LICENSED GENERAL CONTRACTOR REGISTERED WITH THE CITY.
2. THE PLANS SHALL DIMENSION THE LOCATION, OF ALL MAINS MEASURED FROM THE BACK OF CURB (OR EDGE OF PAVEMENT, IF NO CURBING EXISTS. LANDSCAPE PLANS SHALL CLEARLY DEPICT THE DESIGN LOCATION OF PLANTINGS RELATIVE TO THE LOCATION OF PROPOSED AND EXISTING PUBLIC UTILITIES AND STORMWATER INFRASTRUCTURE.
3. PROFILE VIEWS SHALL BE PROVIDED FOR ALL SEWER MAINS. PROFILE VIEWS SHALL BE ON THE SAME SHEET AS THE ASSOCIATED PLAN VIEW AND SHALL INCLUDE THE FOLLOWING INFORMATION:
   A. SIZE, SLOPE, LENGTH AND CLASS OF PIPE
   B. MANHOLE RIM AND INVERT ELEVATIONS
   C. UTILITY CROSSINGS WITH VERTICAL SEPARATION
   D. SHOW PROPOSED SEWER AND EXISTING UTILITY
   E. EXISTING GROUND PROFILE
   F. MATCH LINE
   G. VICINITY MAP
   H. PROFILE VIEW STATIONS TO COINCIDE WITH PLAN VIEW STATIONS
4. GREASE INTERCEPTORS ARE REQUIRED FOR ALL COMMERCIAL BUILDINGS HAVING KITCHEN, FOOD PREPARATION OR SERVING FACILITIES AND / OR MISCELLANEOUS USES. GREASE INTERCEPTORS CONSTRUCTED EXTERNAL TO BUILDINGS SHALL BE SIZED IN ACCORDANCE WITH FAC 64-E-6. CALCULATIONS TO DETERMINE SIZING REQUIREMENTS SHALL BE SUBMITTED AS PART OF BUILDING PERMITTING. AN INSPECTION MANHOLE MAY BE REQUIRED IMMEDIATELY DOWN STREAM OF THE GREASE INTERCEPTOR FOR INSPECTION PURPOSES, AS DEEMED APPROPRIATE BY THE CITY.
5. ON ALL EXCAVATION AND BACKFILLING, THE CONTRACTOR SHALL PROVIDE ADEQUATE SHEETING AND BRACING IN ACCORDANCE TO OSHA GUIDELINE IN ORDER TO PROVIDE FOR THE SAFETY OF WORKMEN, AS WELL AS REPRESENTATIVES OF THE CITY, THE DESIGN ENGINEER, AND THE DEVELOPER.
6. ALL PVC. PIPE SHALL BE STORED IN SUCH A WAY AS TO PREVENT WARPING, DEFLECTION, OR DEFORMATION. ANY PIPE DEEMED TO BE MISSHAPED IN ANY WAY FOR ANY REASON SHALL BE REJECTED.
7. NO USED, RE-USED, RUSTED, SECOND HAND, OR ANY MATERIAL THAT IS NOT NEW SHALL BE USED IN ANY UTILITY IMPROVEMENT PROJECTS WITHIN THE CITY SERVICE AREA.
8. THE CONTRACTOR SHALL AT ALL TIMES, DURING PIPE LAYING OPERATIONS DEWATER THE GROUND SUFFICIENTLY TO KEEP THE GROUNDWATER ELEVATION A MINIMUM OF 6" BELOW THE PIPE BEING LAID WITHIN THE AREA OF THE TRENCH.
9. ALL PIPES SHALL BE LAID ON A FIRM FOUNDATION. SOFT OR SPONGY BEDDING FOR PIPES IS NOT ACCEPTABLE. ANY UNSUITABLE MATERIAL SHALL BE REMOVED AND REPLACED WITH A DRY, COMPACTED, GRANULAR MATERIAL SATISFACTORY TO THE CITY. MORTAR TO CONTAIN "HYDRATITE" OR APPROVED EQUAL, TO PREVENT SHRINKAGE. CEMENT USED IN CONCRETE MIX FOR PRECAST STRUCTURES SHALL BE TYPE II, ACID RESISTANT AND SULFIDE RESISTANT CONCRETE.
10. MORTAR TO CONTAIN "HYDRATITE" OR APPROVED EQUAL, TO PREVENT SHRINKAGE. CEMENT USED IN CONCRETE MIX FOR PRECAST STRUCTURES SHALL BE TYPE II, ACID RESISTANT AND SULFIDE RESISTANT CONCRETE.

STANDARD CONSTRUCTION DETAIL
SANITARY SEWER NOTES
REV. 12/18

FILE NAME S1.DOC
DETAIL REF: S-1

11. THE CITY MAY REQUIRE ALL NEW SANITARY SEWER GRAVITY SYSTEMS TO BE SMOKE TESTED PRIOR TO FINAL ACCEPTANCE. ALL TESTING MUST BE DONE IN THE PRESENCE OF THE CITY'S DESIGNATED SITE INSPECTOR.
12. THE CITY OF PORT ORANGE RESERVES THE RIGHT TO REQUIRE THE DEVELOPER TO PERFORM VACUUM TESTING OF ALL SANITARY MANHOLES, AIR TEST SEWER MAINS, AND REQUIRES THAT ALL SANITARY SEWER MAIN LINES BE TELEVISED PRIOR TO FINAL ACCEPTANCE. LATERALS SHALL BE TELEVISED UPON DEMAND BY THE CITY PRIOR TO FINAL ACCEPTANCE WHEN IT IS SUSPECTED THAT A PROBLEM EXISTS.
13. ALL TAPPING OF PRESSURE MAINS AND CORING OF MANHOLES SHALL BE PERFORMED BY THE CITY AND BILLED IN ACCORDANCE WITH THE ADOPTED FEE RESOLUTION. SCHEDULING OF THESE CONNECTIONS SHALL REQUIRE A MINIMUM 48 HOURS NOTIFICATION DIRECTED TO THE CITY'S DESIGNATED SITE INSPECTOR WHO SHALL COORDINATE THE WORK DIRECTLY WITH THE PUBLIC UTILITIES DEPARTMENT. SUBSEQUENTLY, THE CONNECTION SHALL BE SCHEDULED TO COMMENCE BETWEEN 8:00 A.M. AND NOON ON THE APPROPRIATE DAY ESTABLISHED BY CITY. WITH RESPECT TO TIE-IN CONNECTIONS AND CORING OPERATIONS, THE CITY RESERVES THE RIGHT TO REQUIRE CONNECTIONS TO BE PERFORMED DURING PERIODS OF LOW FLOW (MIDNIGHT TO 6:00 A.M.) IN ORDER TO MINIMIZE SERVICE DISRUPTION TO EXISTING CUSTOMERS. CONTRACTORS HAVING EXPERIENCE AND PROPER EQUIPMENT MAY BE GRANTED PERMISSION TO CORE MANHOLE BY PUBLIC UTILITIES DEPARTMENT.
14. NEW OR RELOCATED, UNDERGROUND MAINS SHALL BE LAID TO PROVIDE THE FOLLOWING MINIMUM HORIZONTAL SEPARATIONS (OUTSIDE TO OUTSIDE):

	WATER	STORM GRAVITY	STORM FORCE	RECLAIM	SANITARY GRAVITY	SANITARY FORCE
WATER		3'	3'	3'	6', PREFERRED 10'	6', PREFERRED 10'
STORM GRAVITY	3'		3'	3'	6', PREFERRED 10'	6', PREFERRED 10'
STORM FORCE	3'	3'		3'	6', PREFERRED 10'	6', PREFERRED 10'
RECLAIM	3'	3'	3'		6', PREFERRED 10'	6', PREFERRED 10'
SANITARY GRAVITY	6', PREFERRED 10'	6', PREFERRED 10'	6', PREFERRED 10'	6', PREFERRED 10'		6', PREFERRED 10'
SANITARY FORCE	6', PREFERRED 10'	6', PREFERRED 10'	6', PREFERRED 10'	6', PREFERRED 10'	6', PREFERRED 10'	

15. A 3' MINIMUM HORIZONTAL SEPARATION BETWEEN THE SANITARY GRAVITY AND WATER MAINS SHALL BE ALLOWED WHEN THE WATER MAIN IS INSTALLED IN A SEPARATE TRENCH OR ON AN UNDISTURBED EARTH SHELF AT LEAST 6" ABOVE THE SANITARY GRAVITY MAIN. ALTERNATIVELY, THE 3' MINIMUM HORIZONTAL SEPARATION SHALL BE ALLOWED WHEN THE SEWER MAIN IS ENCASED WITH CONCRETE OR ENCLOSED IN A WATER TIGHT CARRIER PIPE OR UPGRADED TO PRESSURE RATED PVC PIPE (MEETING AWWA C-900 OR C-905 SPECIFICATION AND PRESSURE TESTED AT 150 PSI TO ASSURE WATER TIGHTNESS PRIOR TO BACKFILLING).

STANDARD CONSTRUCTION DETAIL
SANITARY SEWER NOTES
(CONTINUED)
REV. 12/18

FILE NAME S1.DOC
DETAIL REF: S-1.1

16. NEW OR RELOCATED, UNDERGROUND MAINS SHALL BE LAID TO PROVIDE THE FOLLOWING MINIMUM CROSSING/VERTICAL SEPARATIONS (OUTSIDE TO OUTSIDE):

	WATER	STORM GRAVITY	STORM FORCE	RECLAIM	SANITARY GRAVITY	SANITARY FORCE
WATER		OVER STORM GRAVITY 6", PREFERRED 12"	OVER STORM FORCE 12"	OVER RECLAIM 12"	OVER SANITARY GRAVITY 6", PREFERRED 12"	OVER SANITARY FORCE 12"
		UNDER STORM GRAVITY 12"	UNDER STORM FORCE 12"	UNDER RECLAIM 12"	UNDER SANITARY GRAVITY 12"	UNDER SANITARY FORCE 12"
STORM GRAVITY	OVER WATER 12"		OVER STORM FORCE 6"	OVER RECLAIM 6", PREFERRED 12"	OVER SANITARY GRAVITY 6", PREFERRED 12"	OVER SANITARY FORCE 6", PREFERRED 12"
	UNDER WATER 6", PREFERRED 12"		UNDER STORM FORCE 6"	UNDER RECLAIM 12"	UNDER SANITARY GRAVITY 12"	UNDER SANITARY FORCE 12"
STORM FORCE	OVER WATER 12"	OVER STORM GRAVITY 6"		OVER RECLAIM 12"	OVER SANITARY GRAVITY 12"	OVER SANITARY FORCE 12"
	UNDER WATER 12"	UNDER STORM GRAVITY 6"		UNDER RECLAIM 12"	UNDER SANITARY GRAVITY 12"	UNDER SANITARY FORCE 12"
RECLAIM	OVER WATER 12"	OVER STORM GRAVITY 12"	OVER STORM FORCE 12"		OVER SANITARY GRAVITY 12"	OVER SANITARY FORCE 12"
	UNDER WATER 12"	UNDER STORM GRAVITY 6", PREFERRED 12"	UNDER STORM FORCE 12"		UNDER SANITARY GRAVITY 12"	UNDER SANITARY FORCE 12"
SANITARY GRAVITY	OVER WATER 12"	OVER STROM GRAVITY 12"	OVER STORM FORCE 12"	OVER RECLAIM 12"		OVER SANITARY FORCE 12"
	UNDER WATER 6", PREFERRED 12"	UNDER STORM GRAVITY 6", PREFERRED 12"	UNDER STORM FORCE 12"	UNDER RECLAIM 12"		UNDER SANITARY FORCE 12"
SANITARY FORCE	OVER WATER 12"	OVER STORM GRAVITY 12"	OVER STORM FORCE 12"	OVER RECLAIM 12"	OVER SANITARY GRAVITY 12"	
	UNDER WATER 12"	UNDER STORM GRAVITY 6", PREFERRED 12"	UNDER STORM FORCE 12"	UNDER RECLAIM 12"	UNDER SANITARY GRAVITY 12"	

STANDARD CONSTRUCTION DETAIL
SANITARY SEWER NOTES
(CONTINUED)
REV. 12/18

FILE NAME S1.DOC
DETAIL REF: S-1.2

1. LIFT STATION MINIMUM COMPONENTS: WET WELL, DUPLEX SUBMERSIBLE OR SURFACE MOUNTED OR RECESSED MOUNTED PUMPS, EMERGENCY PUMP OUT AND VALVE BOX, METER AND BOX, ISOLATION VALVE AND BOX, POWER AND CONTROL PANELS, WATER SERVICE, AND TELEMETRY.
2. WET WELL DIMENSIONS/REQUIREMENTS:
   DIAMETER, MINIMUM = 6'
   DEPTH, MAXIMUM = 16' FOR SURFACE MOUNTED PUMP SYSTEM, 26' FOR SUBMERSIBLE PUMP SYSTEM
   WALL THICKNESS MINIMUM = 8"
   LOWEST INVERT TO WET WELL BOTTOM SEPARATION MINIMUM = 60"
   TOP ELEVATION MINIMUM = 12" ABOVE FINISHED/SURROUNDING GRADE/NO LOWER THAN THE 100-YEAR BASE FLOOD ELEVATION
3. LIFT STATIONS PROPOSED TO BE GREATER THAN 16' DEEP OR THAT DO NOT MEET THE MINIMUM DISTANCE REQUIREMENT FROM LOWEST INVERT TO WET WELL BOTTOM SHALL BE SUBMERSIBLE PUMP SYSTEMS.
4. SUBMERSIBLE PUMPS SHALL BE FLYGT (XYLEM) OR ABS SULZER AND SURFACE OR RECESSED PUMPS SHALL BE SMITH & LOVELESS, INC. EQUIPMENT OTHER THAN SPECIFIED NEED TO BE REVIEWED AND APPROVED BY THE CITY.
5. INSTRUMENTATION AND CONTROLS (ALL LIFT STATION TYPES):
   A. ALL INSTRUMENTATION, CONTROL, EQUIPMENT, PROGRAMMING, AND OPERATION, HEREINAFTER TERMED "THE SYSTEM", SHALL BE INTEGRATED BY THE CONTROL SYSTEM INTEGRATOR WHO, WITH THE CONTRACTOR, SHALL COORDINATE AND HAVE RESPONSIBILITY FOR INTERCONNECTION AND INTEGRATION OF ALL NEW, EXISTING AND ANY EQUIPMENT BEING INSTALLED AS SHOWN ON THE DRAWINGS. THE SYSTEM INTEGRATOR, WITH THE CONTRACTOR, SHALL PROVIDE ALL OF THE SERVICES, EQUIPMENT AND APPURTENANCES REQUIRED TO ACHIEVE A FULLY INTEGRATED AND OPERATIONAL SYSTEM. THE CONTROL SYSTEM INTEGRATOR, WITH THE CONTRACTOR, SHALL COORDINATE WITH ALL EQUIPMENT MANUFACTURERS AND WITH ALL MECHANICAL AND ELECTRICAL SYSTEM SUPPLIERS FOR INTERFACE REQUIREMENTS AND FURNISH ALL COMPATIBLE INTERFACE SIGNALING ANY SIGNAL ISOLATORS THAT ARE REQUIRED.
   B. PRODUCTS SHALL BE OF THE SAME MAJOR INSTRUMENTATION MANUFACTURER WITH PANEL MOUNTED DEVICES OF THE SAME TYPE AND MODEL, AS POSSIBLE. SUBSTITUTION ON FUNCTIONS OR EQUIPMENT SPECIFIED WILL NOT BE ACCEPTABLE.
   C. IN ORDER TO ENSURE THE INTERCHANGEABILITY OF PARTS, QUALITY CONTROL, EASE OF INTERFACING BETWEEN VARIOUS SUB-SYSTEMS AND ESTABLISHMENT OF MINIMUMS WITH REGARD TO RANGES AND ACCURACY. STRICT COMPLIANCE WITH THE ABOVE REQUIREMENTS SHALL BE MAINTAINED.
   D. THE SYSTEM SHALL BE FABRICATED, ASSEMBLED, INSTALLED AND PLACED IN PROPER OPERATING CONDITION IN FULL CONFORMITY WITH DRAWINGS, SPECIFICATIONS, ENGINEERING DATA, INSTRUCTIONS AND RECOMMENDATIONS.
   E. ALL EQUIPMENT AND INSTALLATIONS SHALL SATISFY APPLICABLE NATIONAL, STATE AND LOCAL MECHANICAL AND ELECTRICAL CODES.
6. WET WELL SECTIONS SHALL BE JOINED USING "RAMNECK" JOINT MATERIAL AND SHALL BE FREE FROM SEEPAGE PRIOR TO ACCEPTANCE. PROVIDE "EZ-WRAP" BUTYL ADHESIVE TAPE PER MANUFACTURER'S RECOMMENDATIONS AT EACH WETWELL SECTION EXTERIOR JOINT CIRCUMFERENCE.

STANDARD CONSTRUCTION DETAIL
SANITARY SEWER LIFT STATION NOTES
REV. 12/18

FILE NAME S2.DOC
DETAIL REF: S-2

7. WET WELL CONSTRUCTION SHALL BE REINFORCED CONCRETE IN ACCORDANCE WITH A.S.T.M. C-76, 4,000 PSI AT 28 DAYS. ALTERNATE CONSTRUCTION SHALL BE PRECAST MONOLITHIC WITH BASE SLAB IN ACCORDANCE WITH ASTM C-478.
8. LIFT STATION AND THE LAST MANHOLE CONNECTING TO THE WET WELL SHALL BE FIBERGLASS LINED, AGRU SURE GRIP 13MM STUD HEIGHT, PE YELLOW, 3.0 MIN THICKNESS, OR OTHER MATERIAL AS APPROVED BY THE CITY OF PORT ORANGE.
9. PIPE AND FITTINGS IN WET WELLS TO BE ASSEMBLED USING 316 STAINLESS STEEL BOLTS AND NUTS ONLY.
10. ALL DISCHARGE FITTINGS TO BE PVC RESTRAINED JOINT.
11. ALL SEWER LINES ENTERING AND EXITING MANHOLES SHALL BE SEALED UTILIZING RUBBER BOOTS WITH 316 STAINLESS STEEL STRAPS AND COVERED WITH HYDRAULIC CEMENT OR OTHER CITY APPROVED INFILTRATION LIMITING METHODS.
12. ELECTRICAL PERMIT TO BE OBTAINED FROM CITY OF PORT ORANGE (OR APPROPRIATE JURISDICTION) PRIOR TO BEGINNING WORK ON ANY ELECTRICAL WIRING, EQUIPMENT, ETC. ALL ELECTRICAL WIRING TO COMPLY WITH NATIONAL ELECTRICAL CODE.
13. NO SPLICES OR JUNCTION BOXES ARE ALLOWED FOR BALL FLOAT CORD INSTALLATION.
14. LINKABLE FUSED ELECTRICAL DISCONNECT REQUIRED.
15. ALL LIFT STATION WIRING SHALL BE STANDARD COPPER. THREE PHASE POWER AND MOTORS REQUIRED.
16. DEMARCATION PANEL REQUIRED FOR ALL CONNECTIONS INTO WET WELL.
17. EMERGENCY "HIGH LEVEL" WET WELL SOLID ALARM LIGHT REQUIRED. NO HORN OR AUDIBLE ALARM REQUIRED.
18. EMERGENCY ELECTRICAL RECEPTACLE REQUIRED TO BE INSTALLED ON ELECTRICAL EQUIPMENT RACK.
19. DEVELOPER/CONTRACTOR TO PAY ALL INITIAL ELECTRICAL CONNECTION CHARGES, ETC. ON THE DAY OF FINAL ACCEPTANCE BY THE CITY, ALL FUTURE MONTHLY ELECTRICAL BILLS TO BE TAKEN OVER BY THE CITY OF PORT ORANGE PUBLIC UTILITIES DEPT. PLEASE CONTACT THE PUBLIC UTILITIES DEPARTMENT AT (386) 506-5750 TO TRANSFER POWER BILL OVER TO THE CITY.
20. LIFT STATION ENCLOSURE SHALL BE 6' HIGH BLACK PLASTIC COATED CHAIN LINK FENCE, WOODEN SHADOW BOX FENCE, OR MASONRY WALL, AS APPROVED BY THE CITY OF PORT ORANGE COMMUNITY DEVELOPMENT DEPARTMENT. THE MASONRY WALL SHALL BE IN COMPLIANCE WITH THE ARCHITECTURAL AND LANDSCAPE REQUIREMENTS OF THE LDC. ANY SPECIAL FENCING APPROVED AND INSTALLED SHALL BE MAINTAINED BY THE PRIVATE ENTITY RESPONSIBLE. THE ENCLOSURE SHALL BE INSTALLED WITH A MINIMUM OF 36" CLEARANCE FROM ALL ELECTRICAL / MECHANICAL EQUIPMENT.
21. ALL GROUND SURROUNDING THE LIFT STATION MUST BE GRADED IN #57 STONE. FINAL ACCEPTANCE OF THE LIFT STATION WILL NOT BE GIVEN UNTIL EFFECTIVE EROSION AND POSITIVE DRAINAGE CONTROL HAVE BEEN PROVIDED
22. LIFT STATION INSPECTIONS SHALL BE SCHEDULED AND COORDINATED THROUGH THE CITY'S SITE INSPECTOR 48 HOURS IN ADVANCE. IF DETERMINED BY THE CITY'S INSPECTOR THAT ALL WORK IS COMPLETE AND READY, THE CONTRACTOR MAY SCHEDULE THE STATION START-UP.
23. THE CONTRACTOR WILL NOTIFY, AT A MINIMUM, THE CITY UTILITIES ENGINEER, ENGINEER OF RECORD, POWER COMPANY, REMOTE TELEMETRY PROVIDER, AND PUMP SUPPLIER OF THE OFFICIAL START-UP DATE AND TIME.

STANDARD CONSTRUCTION DETAIL
SANITARY SEWER LIFT STATION NOTES
(CONTINUED)
REV. 12/18

FILE NAME S2.DOC
DETAIL REF: S-2.1

24. LIFT STATION START-UP AND ACCEPTANCE PROCEDURES:
   - BEFORE FINAL APPROVAL OR ACCEPTANCE OF ANY PUMP STATION BY THE CITY, THE CONTRACTOR SHALL PERFORM A STATION START-UP TEST IN THE PRESENCE OF CITY'S REPRESENTATIVE AND/OR INSPECTOR TO DEMONSTRATE SATISFACTORY PERFORMANCE OF ALL EQUIPMENT AND APPURTENANCES AND THAT THE STATION IS CONSTRUCTED IN ACCORDANCE WITH THE APPROVED PLANS AND STANDARD CONSTRUCTION DETAILS.
   - REPRESENTATIVES FROM THE PUMPING EQUIPMENT MANUFACTURER, REMOTE TELEMETRY PROVIDER, AND ELECTRICAL CONTRACTOR SHALL BE PRESENT AT THE PUMP STATION START-UP TEST.
   - CONTRACTOR OR ENGINEER OF RECORD SHALL PROVIDE A FORMAL TEST PROCEDURE AND FORMS FOR RECORDING DATA FOR THE START-UP TEST.
   - THE RECORDED FIELD DATA SHALL BE SUBMITTED TO THE PUBLIC UTILITIES DEPARTMENT BY THE ENGINEER OF RECORD ALONG WITH A LIST OF ALL PUNCH LIST ITEMS OUTSTANDING.
   - IN THE EVENT THAT THE STATION OR ANY OF IT'S ASSOCIATED COMPONENTS ARE DETERMINED TO BE DEFICIENT, THE CITY RESERVES THE RIGHT TO REQUIRE A COMPLETE NEW START-UP WITH ALL PARTIES NOTED ABOVE PRESENT.
   - THE ENGINEER OF RECORD SHALL PROVIDE THREE (3) PAPER COPIES, ONE (1) PDF FILE AND ONE (1) DWG FILE OF THE STATION AS-BUILTS AND OPERATION AND MAINTENANCE MANUAL TO THE PUBLIC UTILITIES DEPARTMENT PRIOR TO FINAL ACCEPTANCE OF THE LIFT STATION.
   - LIFT STATIONS SHALL ONLY BE CONSIDERED AS ACCEPTED BY THE CITY UPON WRITTEN CONFIRMATION BY THE PUBLIC UTILITIES DEPARTMENT TO THE ENGINEER OF RECORD.

STANDARD CONSTRUCTION DETAIL
SANITARY SEWER LIFT STATION NOTES
REV. 12/18

FILE NAME S2.DOC
DETAIL REF: S-2.2

AIR RELEASE VALVES

MANUFACTURER	MODEL #
ARI	D-025P (Plastic)

GATE VALVES AND TAPPING VALVES – RESILIENT SEATED (AWWA C509 AND C515) 24" OR SMALLER

MANUFACTURER	SERIES OR MODEL #
American AVK Co.	3, 18, 25, 45, 55, & 66
Clow	2638 and 2639
Mueller	A-2360, A-2361, T-2360, T-2361
American Flow Control	2500

JOINTS RESTRAINED – PVC ONLY

MANUFACTURER	MODEL #
EBBA Iron Inc	Series 1500/1600/2000/2500/2800
Star Pipe	Stargrip Series 1000/1100/1200/4000
Sigma	One-Lock SLC, PV-Lok for PVC
Smith-Blair	Cam-Lock (111 & 120), Bell-Lock (115 & 165)

FORCE MAIN FITTINGS – PVC AND DIP CLASS 350 (WITH PROTECTO 401 CERAMIC EPOXY), C-900, C-905 OR C-907

MANUFACTURER	Harco, Multi-Fittings, Plastic Trends, Head, Tyler/Union

MANHOLE AND LIFT STATION WET WELL REHABILITATION LINER

MANUFACTURER	Raven 405, ½" minimum thick fiberglass liner (cylinder)

STANDARD CONSTRUCTION DETAIL
SANITARY SEWER AND FORCE MAIN
APPROVED PRODUCTS
REV. 12/18

FILE NAME S3.DOC
DETAIL REF: S-3

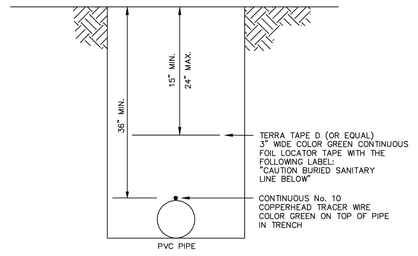

NOTE:

1. CONTINUOUS No. 10 COPPERHEAD TRACER WIRE TO BE INSTALLED WITH ALL PIPE. WIRE SHALL BE BROUGHT UP TO GRADE AT ALL VALVES.
2. ALL TRACER WIRES SHALL BE INTERCONNECTED WITH WATER-PROOF WIRE NUT CAP OR WITH SIMILAR WATER-PROOF SPLICE KIT AT ANY SPLICE AND WHERE SERVICES CONNECT TO MAINS.
3. A SUCCESSFUL CONTINUITY TEST SHALL BE CONDUCTED AND WITNESSED BY A CITY INSPECTOR AT THE COMPLETION OF TRACER WIRE INSTALLATION.

STANDARD CONSTRUCTION DETAIL
SANITARY SEWER LOCATOR TAPE/
TRACER WIRE INSTALLATION
REV. 12/18

FILE NAME: S14.DWG
DETAIL REF: S-14

No.	REVISIONS	DATE	BY

Kimley»Horn
© 2024 KIMLEY-HORN AND ASSOCIATES, INC.
1530 CORNERSTONE BLVD, BUILDING 1, SUITE 200A,
DAYTONA BEACH, FL 32117
PHONE: 407-898-1511
WWW.KIMLEY-HORN.COM CA 00035160

KHA PROJECT 049204106
DATE 07/08/2024
SCALE AS SHOWN
DESIGNED BY CAB
DRAWN BY BDB
CHECKED BY NEM

LOWES LIFT STATION MODIFICATIONS

PREPARED FOR
CITY OF PORT ORANGE

LICENSED PROFESSIONAL
NICOLE E. MCCONNELL
FL LICENSE NUMBER
73789
DATE:

DETAILS

SHEET NUMBER
D1

This document, together with the concepts and designs presented herein, as an instrument of service, is intended only for the specific purpose and client for which it was prepared. Reuse of and improper reliance on this document without written authorization and adaptation by Kimley-Horn and Associates, Inc. shall be without liability to Kimley-Horn and Associates, Inc.

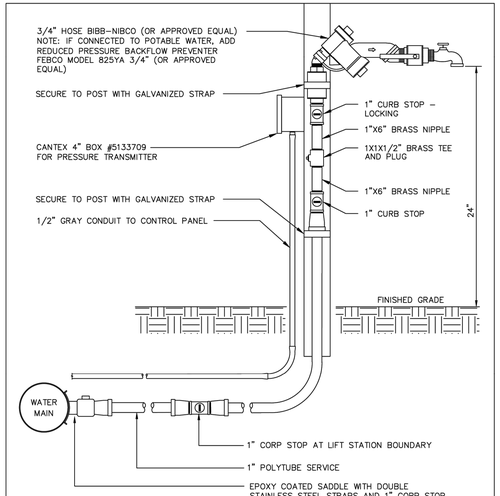

NOTE:

1. RECLAIM WATER TO BE USED AT LIFT STATIONS.
2. WHERE RECLAIM WATER IS NOT AVAILABLE, POTABLE WATER TO BE USED WITH REDUCED PRESSURE BACKFLOW PREVENTER.

STANDARD CONSTRUCTION DETAIL
LIFT STATION WATER SERVICE
REV. 12/18

FILE NAME: S17.DWG
DETAIL REF: S-17

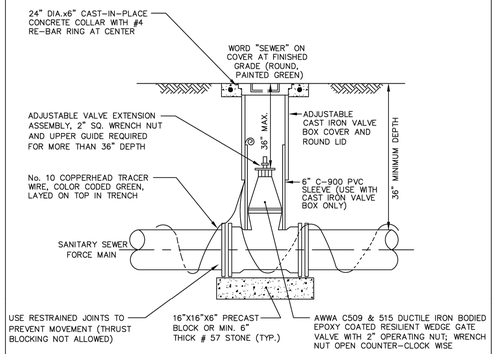

NOTE:

1. BOLT VALVES TO TEE OR CROSS WHEREVER AND WHENEVER APPLICABLE.
2. GATE VALVE WEDGE SHALL BE COMPLETELY ENCAPSULATED WITH EPDM RUBBER.
3. ALL OUTSIDE HEX NUTS, BOLTS AND HARDWARES (EXCEPT MECHANICAL BOLTS SUCH AS "T" BOLTS) SHALL BE MINIMUM 316 STAINLESS STEEL GRADE.

STANDARD CONSTRUCTION DETAIL
SANITARY SEWER FORCE MAIN VALVE AND VALVE BOX
REV. 12/18

FILE NAME: S19.DWG
DETAIL REF: S-19

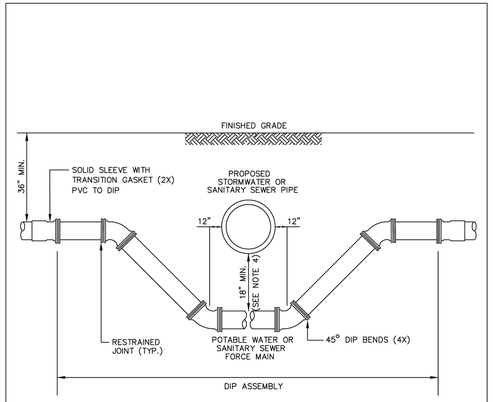

NOTES:

1. LOWERING OF EXISTING POTABLE WATER OR SANITARY SEWER FORCE MAIN BY DEFLECTION METHOD ACCEPTABLE IF FIELD CONDITIONS PERMIT.
2. LENGTH OF SECTION BASED ON MINIMUM LENGTH AS DETERMINED BY DIPRA RESTRAINED JOINT MANUAL.
3. INSTALL RESTRAINED JOINTS, AS REQUIRED, FROM DEFLECTION POINT IN BOTH DIRECTIONS.
4. CONCRETE ENCASEMENT OF SANITARY SEWER MAINS IS AN ALTERNATIVE METHOD OF ADDRESSING A CONFLICT. USE OF ENCASEMENT MUST BE APPROVED BY THE CITY.

STANDARD CONSTRUCTION DETAIL
POTABLE WATER OR SANITARY SEWER FORCE MAIN DEFLECTION
REV. 12/18

FILE NAME: W23.DWG
DETAIL REF: W-23

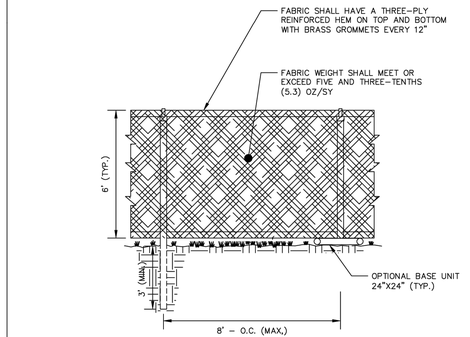

NOTES:

1. FENCES SHALL BE CONSTRUCTED WITH A TOP AND BOTTOM RAIL.
2. GATES MUST REMAIN IN GOOD WORKING ORDER AND MUST BE CLOSED AND SECURED DURING NON-WORKING HOURS.
3. GATES SHALL BE CONSTRUCTED SO THAT THEY SWING IN TOWARDS THE CONSTRUCTION SITE.
4. GATES MUST BE CONSTRUCTED WITH THE SAME DESIGN CHARACTERISTICS AS THE TEMPORARY CONSTRUCTION FENCE.
5. FABRIC SHALL BE ANCHORED IN EACH GROMMET WITH ALUMINUM TIES.
6. OPAQUE WOOD PRIVACY (OR SIMILAR MATERIAL) MAY BE ALLOWED IN LIEU OF THE CHAIN LINK AND FABRIC FENCE.
7. TEMPORARY CONSTRUCTION FENCE MAY BE REQUIRED FOR PROPERTY LINES SHARED BETWEEN DISSIMILAR USES.

STANDARD CONSTRUCTION DETAIL
TEMPORARY CONSTRUCTION FENCE
REV. 12/18

FILE NAME: M22.DWG
DETAIL REF: M-22

THE FOLLOWING MEASURES REPRESENT MINIMUM STANDARDS TO BE ADHERED TO BY THE CONTRACTOR THROUGHOUT THE CONSTRUCTION OF A PROJECT. THE CITY RESERVES THE RIGHT TO REQUIRE ADDITIONAL MEASURES TO BE EMPLOYED WHEN WARRANTED BY CONDITIONS AND/OR THE FAILURE OF THE CONTRACTOR TO EMPLOY APPROPRIATE EROSION CONTROL BEST MANAGEMENT PRACTICES. FAILURE TO COMPLY WITH THESE PROVISIONS SHALL RESULT IN THE ISSUANCE OF A "STOP WORK ORDER".

1. NO DISTURBANCE OF PROPOSED CONSERVATION EASEMENTS, NATURAL BUFFERS, OR WATER BODIES IS PERMITTED. THE CONTRACTOR SHALL LOCATE THESE AREAS ON SITE AND BARRICADE THEM TO AVOID ANY UNAUTHORIZED CLEARING. BARRICADES AND OTHER PROTECTIVE FENCING ARE TO BE LOCATED AT THE DRIP LINE OF EXISTING NATIVE TREES OR AT THE EDGE OF THE NATIVE UNDER-STORY HABITAT, WHICHEVER IS FURTHEST.
2. SPECIMEN AND HISTORIC TREES, CONSERVATION EASEMENTS, NATURAL VEGETATION BUFFERS, AND SIMILAR AREAS MUST BE PROTECTED BY BARRICADES OR FENCING PRIOR TO CLEARING. BARRICADES ARE TO BE SET AT THE DRIP LINE OF THE TREES, AS SPECIFIED, AND MAINTAINED THROUGHOUT THE DURATION OF THE PROJECT. BARBED WIRE IS NOT PERMITTED AS A PROTECTIVE BARRIER.
3. WHERE A CHANGE OF GRADE OCCURS WITHIN THE DRIP LINE OF A SPECIMEN TREE, SILT FENCES WILL BE REQUIRED DURING CONSTRUCTION AND RETAINING WALLS MUST BE INSTALLED PRIOR TO FINAL ACCEPTANCE BY THE CITY.
4. IT SHALL BE THE RESPONSIBILITY OF THE CONTRACTOR TO HAVE ALL PROTECTIVE VEGETATION BARRICADES AND EROSION CONTROL DEVICES AND MEASURES IN PLACE PRIOR TO THE COMMENCEMENT OF ANY EARTHWORK, INCLUDING PRELIMINARY GRUBBING. BEST MANAGEMENT PRACTICES (BMP'S) ARE TO BE IMPLEMENTED, SUCH AS TEMPORARY CONSTRUCTION FENCES, SILT FENCES AND FLOATING TURBIDITY BARRIERS. IT SHALL BE THE RESPONSIBILITY OF THE CONTRACTOR TO MAINTAIN ALL EROSION CONTROL DEVICES AND MEASURES THROUGHOUT THE DURATION OF THE ENTIRE PROJECT. MAINTENANCE SHALL INCLUDE, BUT NOT LIMITED TO, PERIODIC INSPECTION AND REMOVAL OF DEBRIS ABUTTING EROSION CONTROL DEVICES AS SPECIFICALLY IDENTIFIED IN LDC, CH 10, ARTICLE I, SEC. 5.
5. PRIOR TO THE INSTALLATION OF ANY FILL MATERIALS ON SUBJECT SITE, SILT FENCES SHALL BE INSTALLED (1) ALONG SUBJECT SITE BOUNDARY AND/OR PROPERTY LINES, (2) AT THE EDGE OF CONSERVATION EASEMENTS AND WETLANDS, (3) ADJACENT TO NATURAL LANDSCAPE BUFFERS, (4) AROUND THE PERIMETER OF EXISTING STORM WATER TREATMENT FACILITIES, AND (5) AT ANY ADDITIONAL AREAS THAT THE CITY DEEMS NECESSARY TO BE PROTECTED FROM POTENTIAL EROSION IMPACTS DURING CONSTRUCTION. THESE CONDITIONS SHALL APPLY IN ALL INSTANCES WHERE FILL MATERIAL IS BEING INSTALLED WITHIN 25 FEET OF ANY OF THE AFOREMENTIONED LOCATIONS. WHILE THESE ITEMS REPRESENT THE MINIMUM REQUIREMENTS, THE CITY RESERVES THE RIGHT TO IMPOSE ADDITIONAL PROTECTIVE MEASURES, AS DETERMINED DURING ACTUAL SITE VISITS CONDUCTED AS PART OF THE STANDARD REVIEW OF THE SITE-SPECIFIC ABC CLEARING PERMIT APPLICATION AND THROUGHOUT PROJECT CONSTRUCTION.
6. WHERE FILL MATERIAL IS INTENDED TO BE INSTALLED ADJACENT TO EXISTING VEGETATION WHICH IS INTENDED TO REMAIN NATURAL, THE CONTRACTOR MAY INSTALL SILT FENCING AS A TREE PROTECTION MEASURE, IN LIEU OF INSTALLING WOOD BRACING WITH ORANGE MESH. THIS PRACTICE IS ENCOURAGED BY THE CITY. IF THE SILT FENCE FAILS TO PROVIDE ADEQUATE PROTECTION FROM IMPACT DUE TO CONSTRUCTION, THEN BARRICADES OR WOOD BRACING SHALL BE REQUIRED.
7. AT A MINIMUM, THE CONTRACTOR SHALL SEED AND MULCH ALL DISTURBED AREAS. SUFFICIENT GRASS COVERAGE IS TO BE ESTABLISHED WITHIN TWO WEEKS.
8. IT SHALL BE THE RESPONSIBILITY OF THE CONTRACTOR THROUGH SCHEDULING, TO MINIMIZE THE DISTURBANCE OF SITE AREAS THAT HAVE BEEN BROUGHT TO THEIR PROPOSED FINAL GRADE. WITHIN SEVEN (7) DAYS OF BRINGING A SUBJECT AREA TO ITS FINAL GRADE OR INACTIVITY IN CONSTRUCTION, THE CONTRACTOR SHALL INSTALL SEED AND MULCH OR SOD, AS REQUIRED.

STANDARD CONSTRUCTION DETAIL
CONTRACTOR REQUIREMENTS FOR SITE CLEARING, GRADING, AND EROSION CONTROL DESIGN AND CONSTRUCTION
REV. 12/18

FILE NAME: M3.DWG
DETAIL REF: M-3

9. FOR INDIVIDUAL CONSTRUCTION PROJECTS INVOLVING MULTIPLE PHASES, (PHASING IS REQUIRED FOR SITES 30 ACRES AND LARGER) UPON COMPLETION OF EACH PHASE OF THE PROJECT, SEEDING AND MULCHING AND / OR SODDING IS TO BE PERFORMED PRIOR TO COMMENCING THE NEXT PHASE OF CONSTRUCTION.
10. ONCE AN AREA IS SEEDED OR SODDED, IT MUST BE MAINTAINED BY THE CONTRACTOR TO ALLOW THE GRASS TO BECOME ESTABLISHED. IF THE GRASS IS NOT ESTABLISHED WITHIN TWO WEEKS THE CITY MAY REQUIRE THE CONTRACTOR TO RE-SEED OR A NON-VEGETATIVE OPTION MAY BE EMPLOYED.
11. ANY BURNING OF CLEARED MATERIALS MUST BE INSPECTED AND PERMITTED ON A DAILY BASIS. CONTACT THE FIRE MARSHAL AT 506-5905 PRIOR TO EACH DAY OF DESIRED BURNING.
12. ABSOLUTELY NO BURYING OF CLEARED MATERIALS IS PERMITTED.
13. THE REMOVAL OF ALL VEGETATION AND TOPSOIL ON THE FUTURE ROADWAY, PARKING AND BUILDING LOT AREAS IS REQUIRED TO BE COMPLETED PRIOR TO THE PLACEMENT OF FILL ON THOSE AREAS. THE TOPSOIL MAY BE TEMPORARILY STOCKPILED AND USED AS TOPSOIL OVER PROPOSED GREEN AREAS SUCH AS PLANT BEDS, SODDED AREAS, AND WHERE TREES ARE TO BE INSTALLED OR RELOCATED.
14. A SIGNED, DATED, AND SEALED LETTER FROM A SOILS ENGINEER OR THE ENGINEER OF RECORD CERTIFYING THAT THE AREAS TO BE FILLED HAVE BEEN STRIPPED OF ORGANIC MATERIALS, MUST BE SUBMITTED TO THE CITY PRIOR TO FILLING.
15. FILL MATERIAL IS TO BE PLACED IN ONE FOOT MAXIMUM LIFTS AND COMPACTED TO THE APPROPRIATE DENSITY (98% FOR PAVED AREAS AND 95% FOR BUILDING PADS AND ALL OTHER AREAS AS PER AASHTO T-180).
16. DURING SUBDIVISION DEVELOPMENT WHEN FUTURE BUILDING LOTS ARE FILLED AS PART OF THE OVERALL SUBDIVISION IMPROVEMENTS, COMPACTION TEST REPORTS MUST BE PERFORMED ON THE BUILDING LOTS AT 300 FOOT INTERVALS. THESE TESTS ARE TO BE PERFORMED IN ONE-FOOT VERTICAL INCREMENTS. THE RESULTS OF THESE TESTS ARE TO BE SUBMITTED TO THE CITY UPON COMPLETION OF THE TESTS.
17. IF ANY MUCK MATERIAL IS DISCOVERED, IT SHALL BE REQUIRED TO BE REMOVED AND REPLACED WITH A SUITABLE MATERIAL THAT IS PROPERLY BACKFILLED, COMPACTED AND TESTED USING AASHTO T-180 MODIFIED PROCTOR METHOD.
18. STOCKPILING IS NOT GENERALLY PERMITTED BY THE CITY. WHEN ALLOWED, STOCKPILES SHALL NOT EXCEED SIX FEET IN HEIGHT MEASURED FROM THE ORIGINAL GRADE. AT A MINIMUM, STOCK PILES THAT WILL REMAIN IN PLACE IN EXCESS OF TWENTY DAYS SHOULD BE SEEDED AND MULCHED IMMEDIATELY UPON PLACEMENT OF THE FINAL LIFT.
19. SOILS ARE TO BE STABILIZED BY WATER OR OTHER MEANS DURING CONSTRUCTION. THIS IS INTENDED TO REDUCE SOIL EROSION AND THE IMPACT TO NEIGHBORING COMMUNITIES. ADEQUATE WATERING METHODS SHOULD BE EMPLOYED TO ALLOW DAILY COVERAGE OF THE ENTIRE LIMITS OF ALL AREAS THAT DO NOT HAVE AN ESTABLISHED VEGETATIVE COVER. METHODS TO BE EMPLOYED INCLUDE, BUT ARE NOT LIMITED TO, WATER TRUCKS, PERMANENT IRRIGATION SYSTEMS, TEMPORARY SPRINKLER SYSTEMS OPERATED BY PUMPING UNITS CONNECTED TO WET RETENTION PONDS, WATER CANNONS, TEMPORARY IRRIGATION SYSTEMS MOUNTED ATOP STOCKPILE AREAS, AND OTHER METHODS AS DEEMED NECESSARY BY THE CITY.
20. ALL FILL MATERIALS LOCATED BENEATH STRUCTURES AND PAVEMENT SHALL CONSIST OF CLEAN GRANULAR SAND FREE FROM ORGANICS AND SIMILAR MATERIAL THAT COULD DECOMPOSE.
21. ALL FILL TO BE PLACED IN LANDSCAPED AREAS SHALL HAVE A Ph RANGE BETWEEN 5.5 AND 7.5, BE ORGANIC IN NATURE, FREE OF ROCKS AND DEBRIS, OR MATCH NATIVE EXISTING SOILS.

STANDARD CONSTRUCTION DETAIL
CONTRACTOR REQUIREMENTS FOR SITE CLEARING, GRADING, AND EROSION CONTROL DESIGN AND CONSTRUCTION (CONTINUED)
REV. 12/18

FILE NAME: M3.DWG
DETAIL REF: M-3.1

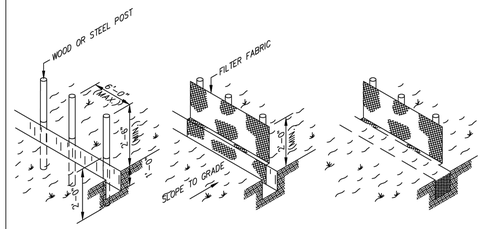

SILT FENCE DETAIL

NOTES:

1. MATERIALS, CONSTRUCTION METHODS AND MAINTENANCE SHALL BE IN ACCORDANCE WITH THE STATE OF FLORIDA EROSION AND SEDIMENT CONTROL DESIGNER AND REVIEWER MANUAL (LATEST EDITION).
2. CONTRACTOR SHALL PROVIDE SILT FENCES OR HAVE BEST MANAGEMENT PRACTICES IMPLEMENTED AS REQUIRED AT ALL STORMWATER DISCHARGE POINTS FOR EROSION CONTROL AND SEDIMENT CONTROL DURING CONSTRUCTION.
3. CONTRACTOR SHALL ROUGH GRADE STORMWATER SWALES AND RETENTION AREAS PRIOR TO CONSTRUCTION OF SITE IMPROVEMENTS.
4. CONTRACTOR SHALL MEET ALL PERMIT CONDITIONS AS ESTABLISHED BY THE CITY OF PORT ORANGE AND ALL OTHER APPLICABLE AGENCIES, INCLUDING BUT NOT LIMITED TO COUNTY, FDOT, AND THE SJRWMD.
5. CONTRACTOR WILL BE ALLOWED TO USE A SMALL PIECE OF EQUIPMENT UP 6' WIDTH AND 1.5 TON WEIGHT, TO CLEAR A NARROW PATH TO INSTALL THE SILT FENCE.

STANDARD CONSTRUCTION DETAIL
SILT FENCE TURBIDITY BARRIER
REV. 12/18

FILE NAME: M23.DWG
DETAIL REF: M-23

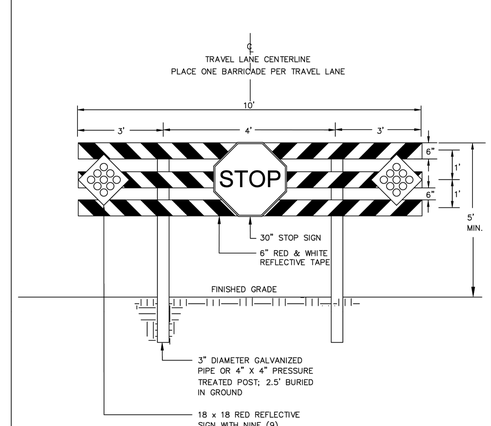

STANDARD CONSTRUCTION DETAIL
ROAD BARRICADE
REV. 12/18

FILE NAME: M26.DWG
DETAIL REF: M-26

No.	REVISIONS	DATE	BY

Kimley»Horn

© 2024 KIMLEY-HORN AND ASSOCIATES, INC.
1530 CORNERSTONE BLVD, BUILDING 1, SUITE 200A,
DAYTONA BEACH, FL 32117
PHONE: 407-898-1511
WWW.KIMLEY-HORN.COM CA 00035160

KHA PROJECT 049204106
DATE 07/08/2024
SCALE AS SHOWN
DESIGNED BY CAB
DRAWN BY BDB
CHECKED BY NEM

LOWES LIFT STATION MODIFICATIONS

PREPARED FOR
CITY OF PORT ORANGE

LICENSED PROFESSIONAL
NICOLE E. MCCONNELL
FL LICENSE NUMBER
73789
DATE:

DETAILS

SHEET NUMBER
D2

This document, together with the concepts and designs presented herein, as an instrument of service, is intended only for the specific purpose and client for which it was prepared. Reuse of and improper reliance on this document without written authorization and adaptation by Kimley-Horn and Associates, Inc. shall be without liability to Kimley-Horn and Associates, Inc.

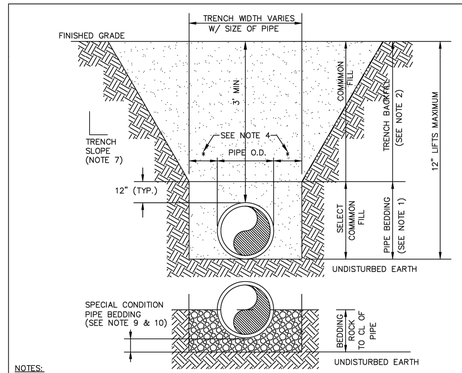

NOTES:

1. PIPE BEDDING: SELECT COMMON FILL COMPACTED TO 95% OF THE MAXIMUM DENSITY AS PER AASHTO T-180.
2. TRENCH BACKFILL: COMMON FILL COMPACTED TO 95% OF THE MAXIMUM DENSITY AS PER AASHTO T-180. 98% DENSITY REQUIRED UNDER DRIVEWAYS, PAVEMENT AND STRUCTURES.
3. PIPE BEDDING UTILIZING SELECT COMMON FILL OR BEDDING ROCK IN ACCORDANCE WITH TYPE "A" BEDDING AND TRENCHING DETAIL MAY BE REQUIRED AS DIRECTED BY THE CITY.
4. (*) 15" MAX. FOR PIPE DIAMETER LESS THAN 24", AND 24" MAX. FOR PIPE DIAMETER 24" AND LARGER.
5. WATER SHALL NOT BE PERMITTED IN THE TRENCH DURING CONSTRUCTION.
6. ALL PIPE TO BE INSTALLED WITH BELL FACING UPSTREAM TO THE DIRECTION OF FLOW.
7. REFER TO OSHA REQUIREMENTS FOR SLOPING, SHEETING AND BRACING IN EXCAVATIONS.
8. FINAL RESTORATION IN IMPROVED AREAS SHALL BE IN COMPLIANCE WITH ALL APPLICABLE REGULATIONS OF GOVERNING AGENCIES. SURFACE RESTORATION WITHIN RIGHT-OF-WAY SHALL COMPLY WITH REQUIREMENTS OF RIGHT-OF-WAY UTILIZATION REGULATIONS AND ROAD CONSTRUCTION SPECIFICATIONS.
9. GRAVITY SEWERS SHALL UTILIZE BEDDING ROCK WHERE UNSUITABLE MATERIAL EXISTS. BEDDING DEPTH SHALL BE 4" MINIMUM FOR PIPE DIAMETER LESS THAN 15", AND 6" MINIMUM FOR PIPE DIAMETER 16" AND LARGER.
10. DEPTH FOR REMOVAL OF UNSUITABLE MATERIAL SHALL GOVERN DEPTH OF BEDDING ROCK BELOW THE PIPE. CITY SHALL DETERMINE IN THE FIELD REQUIRED REMOVAL OF UNSUITABLE MATERIAL TO REACH SUITABLE FOUNDATION.

STANDARD CONSTRUCTION DETAIL PIPE BEDDING AND TRENCH	FILE NAME: M27.DWG
REV. 12/18	DETAIL REF: M-27

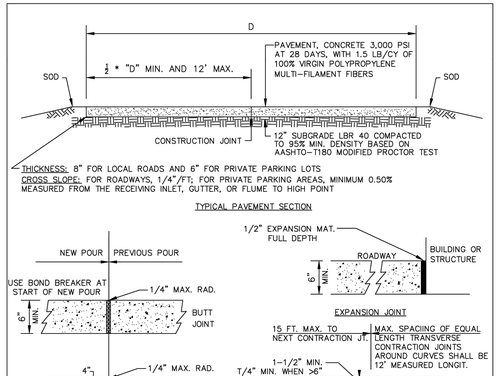

THICKNESS: 8" FOR LOCAL ROADS AND 6" FOR PRIVATE PARKING LOTS
CROSS SLOPE: FOR ROADWAYS, 1/4"/FT; FOR PRIVATE PARKING AREAS, MINIMUM 0.50% MEASURED FROM THE RECEIVING INLET, GUTTER, OR FLUME TO HIGH POINT

TYPICAL PAVEMENT SECTION

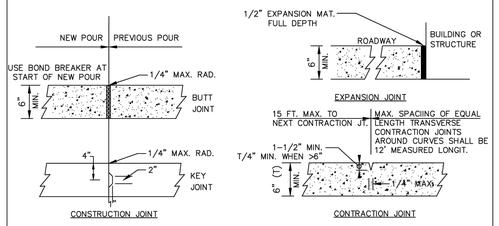

CONSTRUCTION JOINT

EXPANSION JOINT

15 FT. MAX. TO NEXT CONTRACTION JT.

MAX. SPACING OF EQUAL LENGTH TRANSVERSE CONTRACTION JOINTS AROUND CURVES SHALL BE 12' MEASURED LONGIT.

CONTRACTION JOINT

NOTES:

1. CONTRACTION JOINTS MAY BE HAND FORMED, SAWED OR CONSTRUCTED WITH A 1/4" PRE-MOLDED FILLER JOINT. JOINTS MUST BE SAWED BETWEEN 4 AND 18 HOURS AFTER CONCRETE HAS BEEN PLACED.
2. EXPANSION JOINTS TO BE PLACED BETWEEN STRUCTURE AND CURB AND AT ANY PERMANENT STRUCTURE ABUTTING OR WITHIN THE PAVED AREA, INCLUDING SIDEWALKS. USE OF WOOD IS NOT ACCEPTABLE.
3. FINAL DETERMINATION OF CONSTRUCTION JOINT SELECTION AND APPLICATION SHALL BE MADE BY THE ENGINEER OF RECORD BASED ON PROJECT REQUIREMENTS AND LOCATION.
4. CONSTRUCTION JOINTS WITHIN THE SLAB AREA SHOULD NOT CONTAIN PRE-MOLDED EXPANSION JOINT FILLER.
5. CONCRETE PAVEMENT CONSTRUCTION SHALL BE IN ACCORDANCE WITH ACI PUBLICATION 330R-87.

STANDARD CONSTRUCTION DETAIL CONCRETE PAVEMENT DETAILS	FILE NAME: R14.DWG
REV. 12/18	DETAIL REF: R-14

No.	REVISIONS	DATE	BY

Kimley»Horn
© 2024 KIMLEY-HORN AND ASSOCIATES, INC.
1530 CORNERSTONE BLVD, BUILDING 1, SUITE 200A,
DAYTONA BEACH, FL 32117
PHONE: 407-898-1511
WWW.KIMLEY-HORN.COM CA 00035160

KHA PROJECT 049204106	
DATE 07/08/2024	
SCALE	AS SHOWN
DESIGNED BY	CAB
DRAWN BY	BDB
CHECKED BY	NEM

LOWES LIFT STATION MODIFICATIONS

PREPARED FOR
CITY OF PORT ORANGE

LICENSED PROFESSIONAL
NICOLE E. MCCONNELL
FL LICENSE NUMBER
73789
DATE:

DETAILS

SHEET NUMBER
D3

This document, together with the concepts and designs presented herein, as an instrument of service, is intended only for the specific purpose and client for which it was prepared. Reuse of and improper reliance on this document without written authorization and adaptation by Kimley-Horn and Associates, Inc. shall be without liability to Kimley-Horn and Associates, Inc.

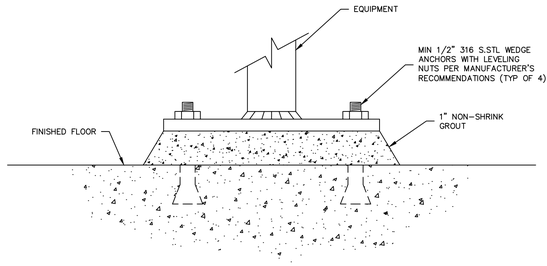

TYPICAL GROUT PAD – DETAIL

N.T.S.

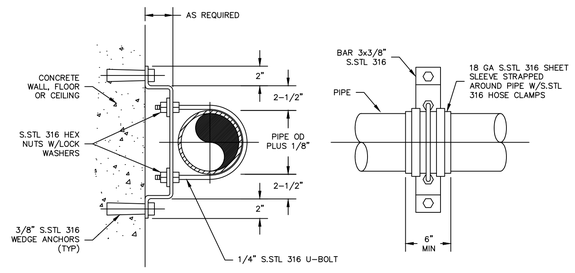

HORIZONTAL PIPE SUPPORT DETAIL

N.T.S.

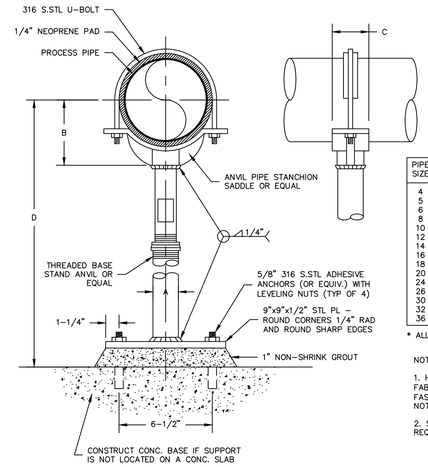

PIPE SIZE	A (NOM.)	B	C	D	
				MIN	MAX
4	3	4–3/16	3–5/8	6	60
5	3	4–13/16	3–5/8	6	60
6	3	5–7/16	3–5/8	8	60
8	3	6–15/16	3–5/8	8	60
10	3	8–7/16	3–5/8	10	60
12	3	9–15/16	3–5/8	12	60
14	3	10–1/2	6	6	60
16	3	11–1/2	6	8	60
18	4	13–1/2	6	8	60
20	4	14–1/2	6	10	60
24	4	17–1/2	6	12	60
26	4	18–1/2	6	6	60
30	4	20–5/8	6	8	60
32	4	21–5/8	6	8	60
36	4	23–5/8	6	10	60

* ALL DIMENSIONS IN INCHES

NOTES:

1. HOT-DIP GALVANIZE ENTIRE PIPE SUPPORT AFTER FABRICATION (EXCEPT FOR STAINLESS STEEL FASTENING HARDWARE), OR UNLESS OTHERWISE NOTED ON THE DRAWINGS AND SPECIFICATIONS.

2. SEE PLANS AND SECTIONS FOR PIPE GRADE REQUIREMENT.

PIPE SUPPORT – STANCHION SADDLE

N.T.S.

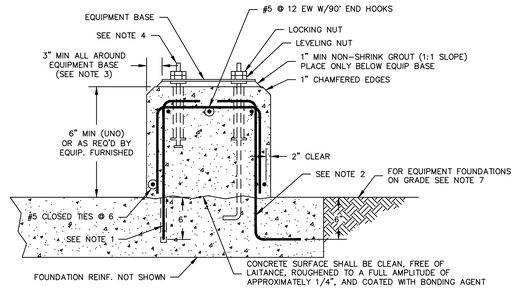

NOTES:

1. ALTERNATE ONE: DRILL INTO EXISTING SLAB TO INDICATED DEPTH AT 12" CENTERS AROUND PERIMETER OF EQUIPMENT BASE AND SET #5 DOWEL HOOKED AS SHOWN IN ADHESIVE ANCHOR SYSTEM.

2. ALTERNATE TWO: FOR EQUIPMENT BASES ON NEW SLABS, PROVIDE #5 DOWELS HAVING TWO HOOKED ENDS AT 12" CENTERS AROUND PERIMETER.

3. EQUIPMENT BASE DIMENSIONS SHALL BE AS INDICATED ON THE DRAWINGS OR AS DETERMINED BY THE EQUIPMENT MANUFACTURER AND APPROVED BY THE ENGINEER.

4. THE SIZE, NUMBER, TYPE, LOCATION, AND THREAD PROJECTION OF THE ANCHOR BOLTS SHALL BE AS DETERMINED BY THE EQUIPMENT MANUFACTURER AND SHALL BE AS APPROVED BY THE ENGINEER. ANCHOR BOLTS SHALL BE HELD IN POSITION WITH A TEMPLATE WHILE EQUIPMENT BASE IS BEING CAST. ALL ANCHOR BOLTS SHALL BE STAINLESS STEEL.

5. PIPE SLEEVES SHALL BE USED TO PROVIDE THE ANCHOR BOLT A MINIMUM MOVEMENT OF 1/2" IN ALL DIRECTIONS. THE MINIMUM SLEEVE LENGTH SHALL BE 8 TIMES THE BOLT DIAMETER. PIPE SLEEVES SHALL HAVE A MINIMUM INTERNAL DIAMETER 1" GREATER THAN BOLT DIAMETER AND A MAXIMUM INTERNAL DIAMETER OF 3" GREATER THAN BOLT DIAMETER. SLEEVES SHALL BE FILLED WITH NON-SHRINK GROUT AFTER INSTALLATION OF GROUT.

CONCRETE EQUIPMENT BASE – DETAIL

N.T.S.

No.	REVISIONS	DATE	BY

Kimley»Horn
© 2024 KIMLEY-HORN AND ASSOCIATES, INC.
1530 CORNERSTONE BLVD, BUILDING 1, SUITE 200A,
DAYTONA BEACH, FL 32117
PHONE: 407-898-1511
WWW.KIMLEY-HORN.COM CA 00035160

KHA PROJECT	049204106
DATE	07/08/2024
SCALE	AS SHOWN
DESIGNED BY	CAB
DRAWN BY	BDB
CHECKED BY	NEM

CITY OF PORT ORANGE 1867 FLORIDA

LOWES LIFT STATION MODIFICATIONS

PREPARED FOR

CITY OF PORT ORANGE

LICENSED PROFESSIONAL

NICOLE E. MCCONNELL

FL LICENSE NUMBER

73789

DATE:

PIPE SUPPORT DETAILS

SHEET NUMBER

D4

PLAN SYMBOLS

	HOME RUN TO PANELBOARD. NO. OF ARROWS INDICATE NO. OF CIRCUITS, HASH MARKS INDICATE NO. OF #12 AWG. CONDUCTORS. NO HASH MARKS INDICATE 2 #12 CONDUCTORS.
	CONDUIT CONCEALED IN WALL, IN SLAB ABOVE, OR ABOVE CEILING
	CONDUIT CONCEALED IN OR BELOW FLOOR OR UNDERGROUND.
	CONDUIT RUN EXPOSED. RUN PARALLEL OR PERPENDICULAR TO STRUCTURE OR WALL.
	FLEXIBLE CONDUIT WITH EQUIPMENT CONNECTION.
	CONCRETE ENCASED DUCTBANK.
	EXTERIOR LED LUMINAIRE AND MOUNTING STANDARD.
J	JUNCTION BOX N.E.C. SURFACE MOUNTED UNLESS INDICATED OTHERWISE.
J	JUNCTION BOX PER N.E.C., FLUSH MOUNTED UNLESS INDICATED OTHERWISE.
	FLUSH OR SURFACE MOUNTED LIGHTING PANELBOARD.
	FLUSH OR SURFACE MOUNTED POWER PANELBOARD.
30	DRY TYPE TRANSFORMER. NO. INDICATES KVA RATING.
	LIQUID FILLED TYPE TRANSFORMER
	20A, 125V, 3W DUPLEX RECEPTACLE IN FLUSH OUTLET BOX, 18" ABOVE FINISHED FLOOR.
	20A, 125V, 3W DUPLEX GFI RECEPTACLE IN FLUSH OUTLET BOX MOUNTED 18" ABOVE FINISHED FLOOR
	20A, 125V, 3W DUPLEX RECEPTACLE, SURFACE MOUNTED.
WP	SURFACE MOUNTED GROUND FAULT DUPLEX WEATHERPROOF RECEPTACLE WITH COVER RATED NEMA 4 WHILE IN USE 20A, 125V, 3W – MOUNTED 18" ABOVE FINISHED FLOOR.
WP	FLUSH MOUNTED GROUND FAULT DUPLEX WEATHERPROOF RECEPTACLE WITH WP COVER RATED NEMA 4 WHILE IN USE MOUNTED 18" ABOVE FINISHED FLOOR
S	SINGLE POLE SWITCH WITH PILOT LIGHT IN FLUSH OUTLET BOX, 48" ABOVE FINISHED FLOOR, UNLESS OTHERWISE NOTED (TYPICAL).
S_P	SINGLE POLE SWITCH, WITH PILOT LIGHT SURFACE MOUNTED.
S_3	THREE–WAY SWITCH IN FLUSH OUTLET BOX.
	NON–FUSIBLE DISCONNECT SWITCH, 30A,3P UNLESS OTHERWISE INDICATED.
	NON–FUSIBLE DISCONNECT SWITCH, 30A,3P UNLESS OTHERWISE INDICATED, WITH REMOTE CONTROL STATION AS REQUIRED BY ELEMENTARY DIAGRAMS OR SPECS.
75	ELECTRIC A.C. MOTOR, NO. INDICATES HORSEPOWER.
P	POWER PULLBOX, SEE DETAIL
C	CONTROL PULLBOX. SEE DETAIL
VFD	VARIABLE FREQUENCY DRIVE
T	THERMOSTAT
TW	ELECTRIC HEATER
	GROUND TEST WELL
	GROUND ROD
O/R	OFF/REMOTE
FS	FLOW SWITCH
LE	LEVEL ELEMENT
LIT	LEVEL INDICATING TRANSMITTER
TS	TEMPERATURE SWITCH
SF	SEAL FAIL
TE	TEMPERATURE ELEMENT
PS	PRESSURE SWITCH
FE	FLOW ELEMENT
FIT	FLOW INDICATING TRANSMITTER
TC	TERMINATION CABINET WITH COPPER LUGS IN NEMA 4X 316 SS ENCLOSURE
SH	SPACE HEATER
LLS	LIQUID LEVEL SWITCH

SINGLE LINE DIAGRAM SYMBOLS

	COMBINATION MOTOR STARTER
ST	SHUNT TRIP
	FUSE
	CAPACITOR
	MOLDED CASE CIRCUIT BREAKER
	TYPICAL SELECTOR SWITCH AND CONTROL. SEE ELEMENTARY DIAGRAMS FOR EXACT TYPE.
75	ELECTRIC A.C. MOTOR, NO. INDICATES HORSEPOWER.
	SERVICE OR EQUIPMENT GROUND.
	NON–FUSIBLE DISCONNECT SWITCH, 30A,3P UNLESS OTHERWISE INDICATED.
	NON–FUSIBLE DISCONNECT SWITCH, 30A,3P UNLESS OTHERWISE INDICATED, WITH REMOTE CONTROL STATION AS REQUIRED BY ELEMENTARY DIAGRAMS OR SPECS.
	120/208V PANELBOARD
	480V PANELBOARD.
	CURRENT TRANSFORMERS
	POTENTIAL TRANSFORMERS.
SH	SPACE HEATER
TS	TEMPERATURE
	CROUSE HINDS EYSR FITTING. FILLED WITH CHICO CEMENT
	CROUSE HINDS EYS FITTING. FILLED WITH CHICO CEMENT
K	KIRK KEY INTERLOCK
FS	FLOW SWITCH
TC	NEMA 4X 316SS TERMINATION CABINET

CONTROL DIAGRAM SYMBOLS

	NORMALLY OPEN CONTACT
	NORMALLY CLOSED CONTACT
	LIMIT SWITCH, NORMALLY OPEN
	LIMIT SWITCH, NORMALLY CLOSED
	PRESSURE SWITCH, NORMALLY OPEN
	PRESSURE SWITCH, NORMALLY CLOSED
	FLOAT SWITCH, NORMALLY OPEN
	FLOAT SWITCH, NORMALLY CLOSED
	FLOW SWITCH, NORMALLY OPEN
	FLOW SWITCH, NORMALLY CLOSED
	TEMPERATURE SWITCH, NORMALLY OPEN
	TEMPERATURE SWITCH, NORMALLY CLOSED
	NORMALLY OPEN, TIMED TO CLOSE CONTACT
	NORMALLY CLOSED, TIMED TO OPEN CONTACT
	NORMALLY CLOSED, TIMED TO CLOSE CONTACT
	NORMALLY OPEN, TIMED TO OPEN CONTACT
AR	ALARM RELAY
AT	ALARM TIMER
CR	CONTROL RELAY
M	MOTOR STARTER
MC	MOTOR CALL
TR	TIMING RELAY
A	ALARM INDICATING LIGHT
R	RUN INDICATING LIGHT
	MOMENTARY CONTACT PUSHBUTTON
	MOMENTARY BREAK PUSHBUTTON OR RESET
K	KEYED SWITCH
	MAINTAINED CONTACT ON–OFF SWITCH
	START/STOP(S/S) CONTROL SWITCH MAINTAINED CONTACT
	THREE POSITION MAINTAINED CONTACT SELECTOR SWITCH
	FUSE
	MOLDED CASE CIRCUIT BREAKER
	CONTROL POWER TRANSFORMER
	REMOTE TERMINAL BLOCK POINT

ABBREVIATIONS

A	AMPERES
AIC	AMPS INTERRUPTING CURRENT
ATS	AUTOMATIC TRANSFER SWITCH
BKR	BREAKER
BLDG	BUILDING
CPCP	CHEMICAL FEED CONTROL PANEL
CPT	CONTROL POWER TRANSFORMER
CU	COPPER
CT	CURRENT TRANSFORMER
DH	DATA HIGHWAY
DISC	DISCONNECT
DSB	DISTRIBUTION SWITCHBOARD
EAP	EYEWASH ALARM PANEL
ELEC	ELECTRICAL
ENCL	ENCLOSURE
EF	EXHAUST FAN
EQ	EQUALIZATION
ETM	ELAPSED TIME METER
EXH	EXHAUST
EXIST	EXISTING
FBC	FLORIDA BUILDING CODE
FPL	FLORIDA POWER & LIGHT
FPP	FIBER PATCH PANEL
FVNR	FULL VOLTAGE NON–REVERSING
GCP	GENERATOR CONTROL PANEL
GEN	GENERATOR
GFR	GROUND FAULT RECEPTACLE
GFI	GROUND FAULT INTERRUPTER
GND	GROUND
GRS	GALVANIZED RIGID STEEL
GST	GROUND STORAGE TANK
HMI	HUMAN MACHINE INTERFACE
HP	HORSEPOWER
KVA	KILO VOLT–AMPERES
KW	KILOWATT
LP	LOOP
LSCP	LIFT STATION CONTROL PANEL
LTG	LIGHTING
MAX	MAXIMUM
MCB	MAIN CIRCUIT BREAKER
MCC	MOTOR CONTROL CENTER
MIN	MINIMUM
MLO	MAIN LUGS ONLY
MPZ	MINI POWER ZONE
MTD	MOUNTED
MTS	MANUAL TRANSFER SWITCH
NEC	NATIONAL ELECTRICAL CODE
N	NEUTRAL
NIP	NETWORK INTERFACE PANEL
NSR	NETWORK SERVER RACK
NTS	NOT TO SCALE
OH	OVERHEAD
P	POLE
PCP	PROCESS CONTROL PANEL
PM	PHASE MONITOR
PVC	POLYVINYL CHLORIDE
RECPT	RECEPTACLE
RCP	REMOTE I/O CONTROL PANEL
RIO	REMOTE I/O
RPVP	RAS PUMP VFD PANEL
RTO	RETURNED TO OWNER
SH	SHIELDED
SLD	SINGLE LINE DIAGRAM
SPD	SURGE PROTECTION DEVICE
SS	STAINLESS STEEL
SSS	SOLID STATE STARTER
STR	STARTER
TC	TERMINATION CABINET
TYP	TYPICAL
TBR	TO BE REMOVED
UPS	UNINTERRUPTIBLE POWER SUPPLY
V	VOLT
VFD	VARIABLE FREQUENCY DRIVE
W	WATT
w/	WITH
WP	WEATHERPROOF
WTP	WATER TREATMENT PLANT
WWTP	WASTEWATER TREATMENT PLANT
XFMR	TRANSFORMER
ø	PHASE

NOTES

1. ALL WORK SHALL BE DONE IN ACCORDANCE WITH THE 2023 8TH EDITION FLORIDA BUILDING CODE SCC CHAPTER 40, APPENDIX A, 106.3.5, THE 2020 NATIONAL ELECTRICAL CODE, (REF: SCCC CHAPTER 40, APPENDIX A, 106.3.5) NFPA 1, NFPA 70 AND NFPA 101 2020 AND SHALL COMPLY WITH ALL LOCAL RULES.
2. THE PLANS REFLECT SYSTEM VOLTAGE DROPS AS PER F.B.C. ENERGY CONSERVATION 2020, C405.6.3 FEEDER CONDUCTORS ARE SIZED FOR A MAXIMUM VOLTAGE DROP OF 2 PERCENT AT DESIGN LOAD. BRANCH CIRCUIT CONDUCTORS ARE SIZED FOR A MAXIMUM VOLTAGE DROP OF 3 PERCENT AT DESIGN LOAD.
3. ELECTRICAL CONTRACTOR SHALL SUPPLY AND INSTALL ALL NEW ELECTRICAL WORK INDICATED.
4. ELECTRICAL CONTRACTOR SHALL VISIT JOB SITE AND FAMILIARIZE HIMSELF WITH ALL CONDITIONS AFFECTING ELECTRICAL INSTALLATION AND MAKE PROVISIONS AS TO THE COST THEREOF. EXISTING CONDITIONS OF ELECTRICAL EQUIPMENT, LIGHT FIXTURES, ETC... THAT ARE PART OF THE FINAL SYSTEM SHALL BE VERIFIED BY THE CONTRACTOR PRIOR TO SUBMITTING HIS BID.
5. MINIMUM WIRE SIZE SHALL BE #12 A.W.G. EXCLUDING CONTROL WIRING, UNLESS OTHERWISE NOTED.
6. IT IS NOT THE INTENT OF THESE PLANS TO SHOW EVERY MINOR DETAIL OF CONSTRUCTION. THE CONTRACTOR IS EXPECTED TO FURNISH AND INSTALL ALL ITEMS FOR A COMPLETE ELECTRICAL SYSTEM AND PROVIDE ALL REQUIREMENTS NECESSARY FOR THE EQUIPMENT TO BE PLACED IN PROPER WORKING ORDER.
7. ELECTRICAL SYSTEM SHALL BE COMPLETE AND EFFECTIVELY GROUNDED AS REQUIRED BY THE N.E.C. 2020 EDITION OR LOCAL CODES. ALL CONDUITS SHALL HAVE A BOND WIRE SIZED PER TABLE 250–122 OF THE 2020 NATIONAL ELECTRICAL CODE.
8. ALL MATERIALS SHALL BE NEW AND BEAR UNDERWRITERS' LABELS WHERE APPLICABLE.
9. ALL WORK SHALL BE PERFORMED BY A LICENSED ELECTRICAL CONTRACTOR IN A FIRST CLASS WORKMANLIKE MANNER. THE COMPLETED SYSTEM SHALL BE FULLY OPERATIVE AND ACCEPTED BY ENGINEER/OWNER.
10. CONTRACTOR SHALL GUARANTEE ALL MATERIALS AND WORKMANSHIP FREE FROM DEFECTS FOR A PERIOD OF NOT LESS THAN TWO YEARS FROM DATE OF ACCEPTANCE.
11. CORRECTION OF ANY DEFECTS SHALL BE COMPLETED WITHOUT ADDITIONAL CHARGE AND SHALL INCLUDE REPLACEMENT OR REPAIR OF ANY OTHER PHASE OF THE INSTALLATION WHICH MAY HAVE BEEN DAMAGED.
12. CONTRACTOR SHALL BE RESPONSIBLE FOR ALL CUTTING AND PATCHING REQUIRED OF HIS WORK.
13. ELECTRICAL CONTRACTOR SHALL LABEL ALL PANELS W/ TYPED WRITTEN DIRECTORIES (NEW & EXISTING).
14. ALL ELECTRICAL WIRING SHALL BE THE RESPONSIBILITY OF THE ELECTRICAL CONTRACTOR.
15. DO NOT SCALE THE ELECTRICAL DRAWINGS. REFER TO THE MECHANICAL DRAWINGS & THE APPROVED MANUFACTURER'S SHOP DRAWINGS FOR THE EXACT LOCATION OF ALL EQUIPMENT.
16. NON–SHADED TEXT DENOTES NEW EQUIPMENT, STRUCTURES AND WORK. *SHADED AND SLANTED* TEXT DENOTES EXISTING EQUIPMENT OR STRUCTURES.
17. ALL CONTROL PANELS SHALL BE UL LISTED AND SHALL COMPLY WITH ARTICLE 409 OF THE NEC.
18. ALL EMPTY CONDUITS SHALL BE INSTALLED WITH PULLSTRING.
19. PER THE FBC–ENERGY CONSERVATION, WITHIN 30 DAYS AFTER THE DATE OF ACCEPTANCE, RECORD DRAWINGS OF THE ACTUAL INSTALLATION SHALL BE PROVIDED TO THE BUILDING OWNER, INCLUDING THE FOLLOWING:
    a. SINGLE LINE DIAGRAM OF THE BUILDING ELECTRICAL DISTRIBUTION SYSTEM.
    b. FLOOR PLANS INDICATING LOCATION AND AREA SERVED FOR ALL DISTRIBUTION (REF: FBC–ECC405.5.4.1–7TH EDITION).
20. PER THE FBC–ENERGY CONSERVATION, WITHIN 30 DAYS AFTER THE DATE OF ACCEPTANCE, AN OPERATING MANUAL MAINTENANCE MANUAL BE PROVIDED TO THE BUILDING OWNER. THE MANUALS SHALL INCLUDE, AT A MINIMUM, THE FOLLOWING:
    a. SUBMITTAL DATA STATING EQUIPMENT RATING AND SELECTED OPTIONS FOR EACH PIECE OF EQUIPMENT REQUIRING MAINTENANCE.
    b. OPERATION MANUALS AND MAINTENANCE FOR EACH PIECE OF EQUIPMENT REQUIRING MAINTENANCE. REQUIRED ROUTINE MAINTENANCE ACTIONS SHALL BE CLEARLY IDENTIFIED.
    c. NAMES AND ADDRESSES OF AT LEAST ONE QUALIFIED SERVICE AGENCY. (REF:FBC–EC 405.5.4.2 – 7TH EDITION).

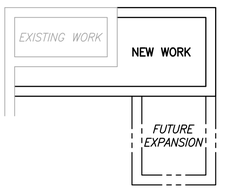

EXISTING OR FUTURE CONDITION DESIGNATION

100% PLANS - NOT FOR CONSTRUCTION

EDA
Electrical Design Associates
6965 PIAZZA GRANDE AVE., STE. 311
ORLANDO, FLORIDA 32835
PHONE: (407) 745–5604
FAX: (407) 745–5603
C.O.A. No. 8079
MICHAEL J. CAHILL, P.E.
Florida P.E. No. 70837

This document, together with the concepts and designs presented herein, as an instrument of service, is intended only for the specific purpose and client for which it was prepared. Reuse of and improper reliance on this document without written authorization and adaptation by Kimley-Horn and Associates, Inc. shall be without liability to Kimley-Horn and Associates, Inc.

No.	REVISIONS	DATE	BY

Kimley»Horn
© 2024 KIMLEY-HORN AND ASSOCIATES, INC.
1530 CORNERSTONE BLVD, BUILDING 1, SUITE 200A,
DAYTONA BEACH, FL 32117
PHONE: 407-898-1511
WWW.KIMLEY-HORN.COM CA 00035106

KHA PROJECT	049204106
DATE	08/2024
SCALE	AS SHOWN
DESIGNED BY	MJC
DRAWN BY	SDV
CHECKED BY	WCN

CITY OF PORT ORANGE 1867 FLORIDA

LOWES LIFT STATION MODIFICATIONS

PREPARED FOR
CITY OF PORT ORANGE

LICENSED PROFESSIONAL

MICHAEL J. CAHILL

FL LICENSE NUMBER
70837

DATE:

LIFT STATION

ELECTRICAL NOTES, SYMBOLS & ABBREVIATIONS

SHEET NUMBER
E1

C:\Users\StephanieVickers\Electrical Design Associates\ACTIVE ORL - Documents\Kimley-Horn\Port Orange - Lowe's LS102_100%\dwg\E01.dwg 8/1/2024 1:36:54 PM, DWG To PDF.pc3

This document, together with the concepts and designs presented herein, as an instrument of service, is intended only for the specific purpose and client for which it was prepared. Reuse of and improper reliance on this document without written authorization and adaptation by Kimley-Horn and Associates, Inc. shall be without liability to Kimley-Horn and Associates, Inc.

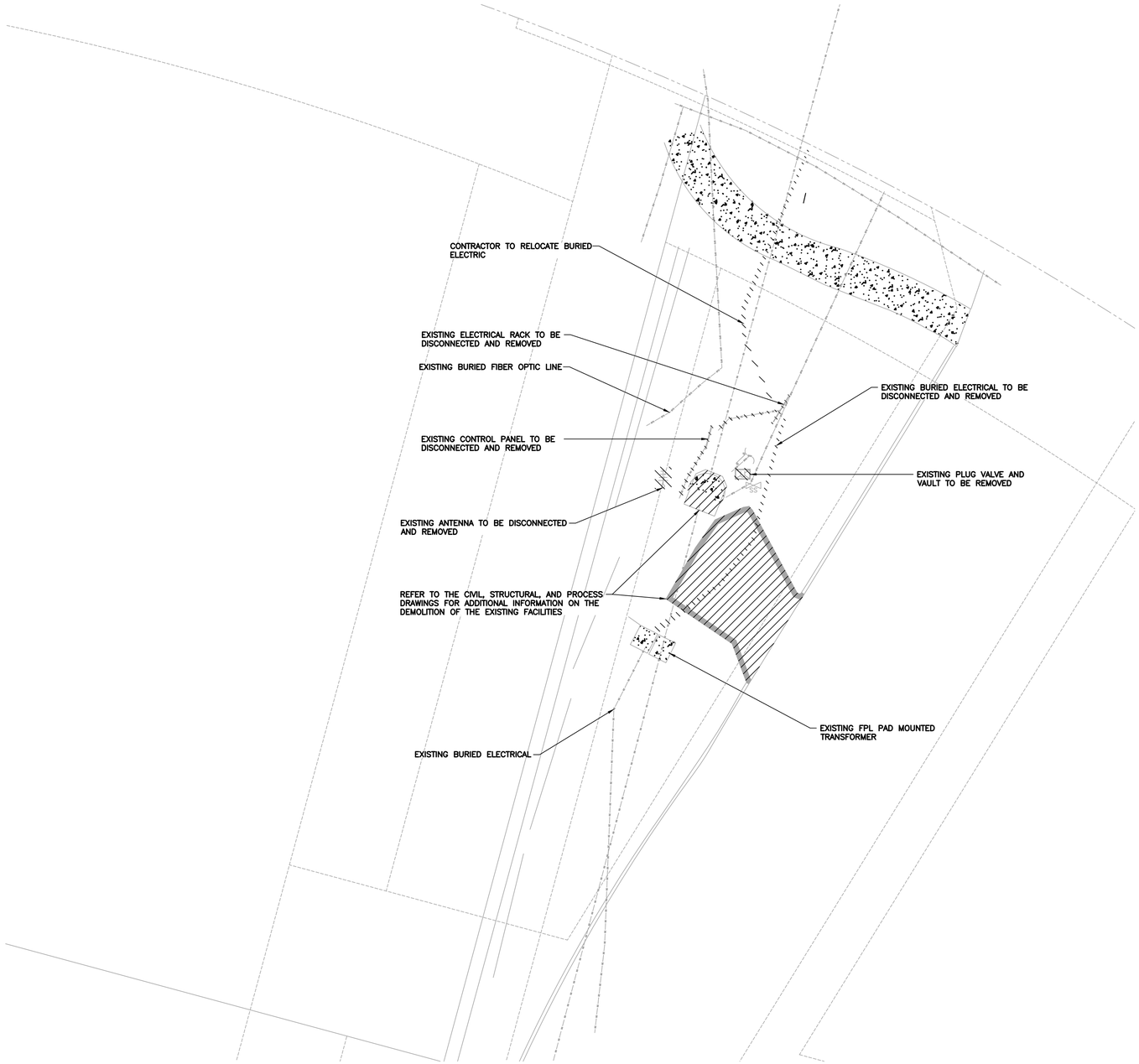

DEMOLITION SITE PLAN

SCALE: 1"=10'-0"

10 5 0 10'

100% PLANS - NOT FOR CONSTRUCTION

EDA
Electrical Design Associates
6965 PIAZZA GRANDE AVE., STE. 311
ORLANDO, FLORIDA 32835
PHONE: (407) 745-5604
FAX: (407) 745-5603
C.O.A. No. 8079
MICHAEL J. CAHILL, P.E.
Florida P.E. No. 70837

No.	REVISIONS	DATE	BY

Kimley»Horn
© 2024 KIMLEY-HORN AND ASSOCIATES, INC.
1530 CORNERSTONE BLVD, BUILDING 1, SUITE 200A,
DAYTONA BEACH, FL 32117
PHONE: 407-898-1511
WWW.KIMLEY-HORN.COM CA 00035106

KHA PROJECT	049204106
DATE	08/2024
SCALE	AS SHOWN
DESIGNED BY	MJC
DRAWN BY	SDV
CHECKED BY	WCN

CITY OF PORT ORANGE 1867 FLORIDA

LOWES LIFT STATION MODIFICATIONS

PREPARED FOR
CITY OF PORT ORANGE

LICENSED PROFESSIONAL

MICHAEL J. CAHILL

FL LICENSE NUMBER
70837

DATE:

LIFT STATION

ELECTRICAL DEMOLITION SITE PLAN

SHEET NUMBER

E2

C:\Users\Stephanie\Videos\Electrical Design Associates\ACTIVE-ORL - Documents\Kimley-Horn\Port Orange - Lower L1502_100P\dwg\E02.dwg 8/1/2024 13:6:56 PM, DWG To PDF.pc3

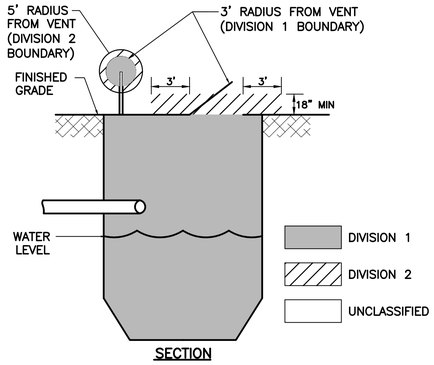

SECTION

NFPA 820 BOUNDARY CLASSIFICATION

N.T.S.

NFPA NOTES:

1. THE AREA INSIDE THE WET WELL IS A HAZARDOUS, CLASS 1, DIV. 1 LOCATION.
2. THE AREA WITHIN 3 FEET FROM THIS HATCH AND 1.5 FEET ABOVE THE WET WELL SLAB IS A HAZARDOUS, CLASS 1, DIV. 2 LOCATION.
3. THE AREA WITHIN A 3 FOOT RADIUS FROM THE VENT OPENING IS A HAZARDOUS, CLASS 1, DIV. 1 LOCATION. THE AREA BEYOND A 3 FOOT RADIUS FROM THE VENT OPENING BUT NOT GREATER THAN A 5 FOOT RADIUS IS A HAZARDOUS CLASS 1, DIV 2. LOCATION.
4. ALL CONDUITS SHALL ENTER THE RTU AND CONTROL PANEL FROM THE BOTTOM UNLESS OTHERWISE SHOWN ON DRAWINGS.
5. PROVIDE WIRING METHODS AND MATERIALS SUITABLE FOR A CLASS 1, DIVISION 1 AREA WITHIN ALL HAZARDOUS AREAS. USE CROUSE-HINDS MODEL EYS CONDUIT SEALING FITTING.
6. FIELD PANEL LOCATIONS ARE TO BE FIELD VERIFIED AND ARE SHOWN FOR CLARITY ONLY.
7. MAIN CIRCUIT BREAKERS AND MOTOR CIRCUIT BREAKERS TO BE SIZED ACCORDING TO MOTOR H.P. AND SYSTEM LOAD.
8. CONDUIT EXTENDING FROM THE WETWELL SHALL BE PVC SCHEDULE 80 AND SHALL BE ENCASED IN A CONCRETE ENVELOPE NO LESS THAN 2 INCHES THICK AND SHALL HAVE A COVER OF NO LESS THAN 24 INCHES. PVC COATED THREADED RIGID ALUMINUM CONDUIT SHALL BE USED FOR THE LAST 24 INCHES OF THE UNDERGROUND RUN TO EMERGENCE. AN EQUIPMENT GROUNDING CONDUCTOR SHALL BE INCLUDED TO PROVIDE ELECTRICAL CONTINUITY. INSTALLATION SHALL BE IN ACCORDANCE WITH N.EC. 70, ARTICLE 501, PART II, 501.10.

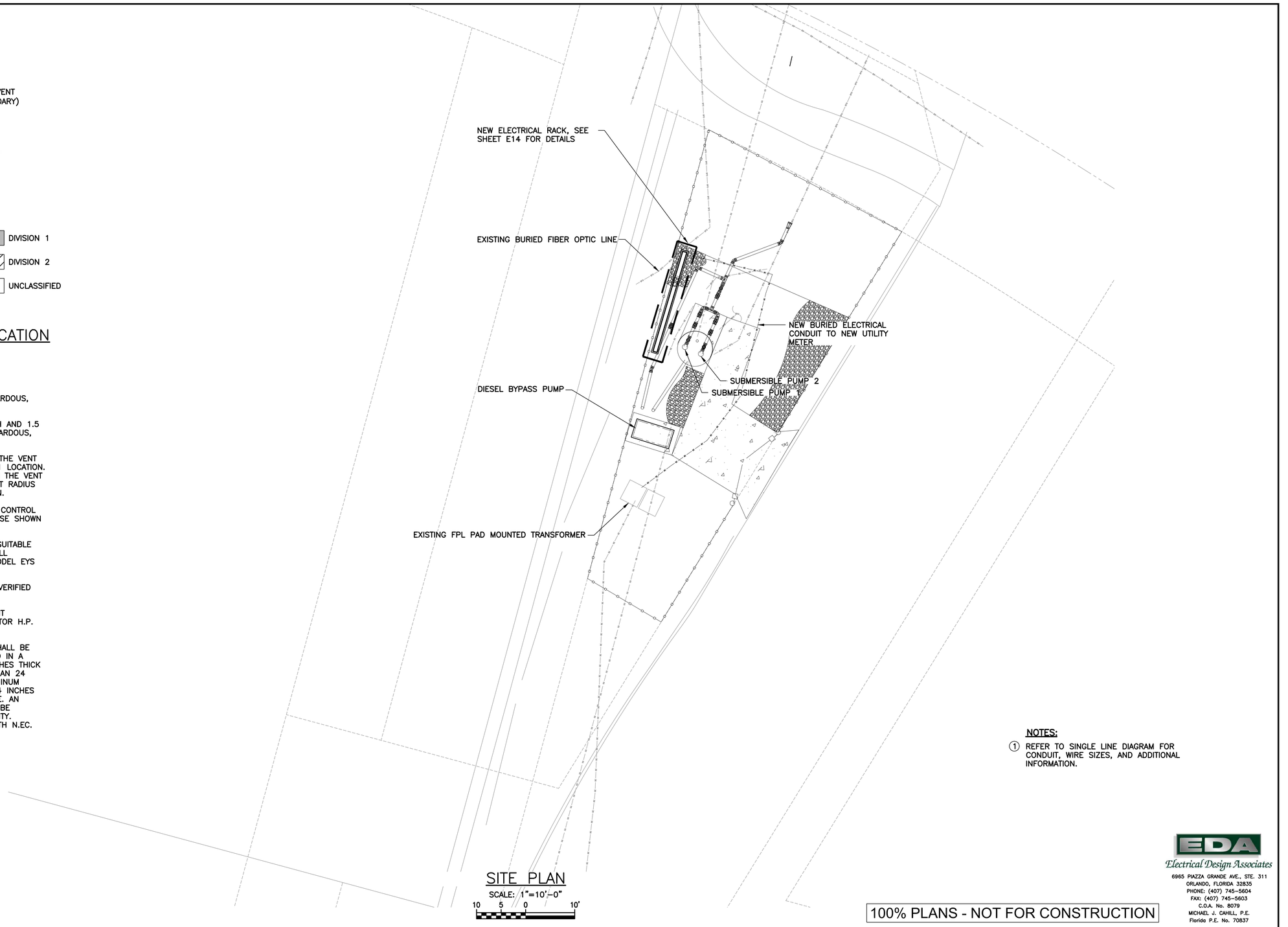

SITE PLAN

SCALE: 1"=10'-0"

10 5 0 10'

NOTES:

1. REFER TO SINGLE LINE DIAGRAM FOR CONDUIT, WIRE SIZES, AND ADDITIONAL INFORMATION.

100% PLANS - NOT FOR CONSTRUCTION

EDA
Electrical Design Associates
6965 PIAZZA GRANDE AVE., STE. 311
ORLANDO, FLORIDA 32835
PHONE: (407) 745-5604
FAX: (407) 745-5603
C.O.A. No. 8079
MICHAEL J. CAHILL, P.E.
Florida P.E. No. 70837

No.	REVISIONS	DATE	BY

Kimley»Horn

© 2024 KIMLEY-HORN AND ASSOCIATES, INC.

1530 CORNERSTONE BLVD, BUILDING 1, SUITE 200A,
DAYTONA BEACH, FL 32117
PHONE: 407-898-1511
WWW.KIMLEY-HORN.COM CA 00035106

KHA PROJECT	049204106
DATE	08/2024
SCALE	AS SHOWN
DESIGNED BY	MJC
DRAWN BY	SDV
CHECKED BY	WCN

CITY OF PORT ORANGE FLORIDA 1867

LOWES LIFT STATION MODIFICATIONS

PREPARED FOR

CITY OF PORT ORANGE

LICENSED PROFESSIONAL

MICHAEL J. CAHILL

FL LICENSE NUMBER

70837

DATE:

LIFT STATION

SITE PLAN

SHEET NUMBER

E3

This document, together with the concepts and designs presented herein, as an instrument of service, is intended only for the specific purpose and client for which it was prepared. Reuse of and improper reliance on this document without written authorization and adaptation by Kimley-Horn and Associates, Inc. shall be without liability to Kimley-Horn and Associates, Inc.

C:\Users\StephanieVickers\Electrical Design Associates\ACTIVE ORL - Documents\Kimley-Horn\Port Orange - Lowe's LS\02_100%\dwg\E03.dwg, 8/1/2024 1:37:01 PM, DWG To PDF.pc3

	①	②	③	④	⑤	⑥	⑦	⑧	⑨	⑩	⑪	⑫	⑬
PROPOSED VOLTAGE	PROPOSED MOTOR SIZE (HP)	GEN RECEPTACLE BREAKER	ATS OR MTS	SERVICE CONDUIT & CONDUCTORS	LOAD CONDUIT & CONDUCTORS	EMERGENCY CONDUCTORS	STARTER SIZE	MOTOR BREAKER	FUSED DISC/FUSES (SEE NOTES)	GROUND	PUMP CABLE CONDUIT SIZE	GENERATOR RECEPTACLE	TC1 DISCONNECTS
240V, 3ø, 3W	X < 7.5 HP	100A,3P	100A,3P	4#2-1 1/2"	3#2 & 1#6 GND-1 1/2"	3#2 & 1#6 GND	1	50A,3P	100A,3P/100A	#6	PER N.E.C.	100A	30A,3P

NOTE:
SOLID STATE SOFT STARTERS SHALL BE PROVIDED FOR MOTOR SIZES ABOVE 50 HP.

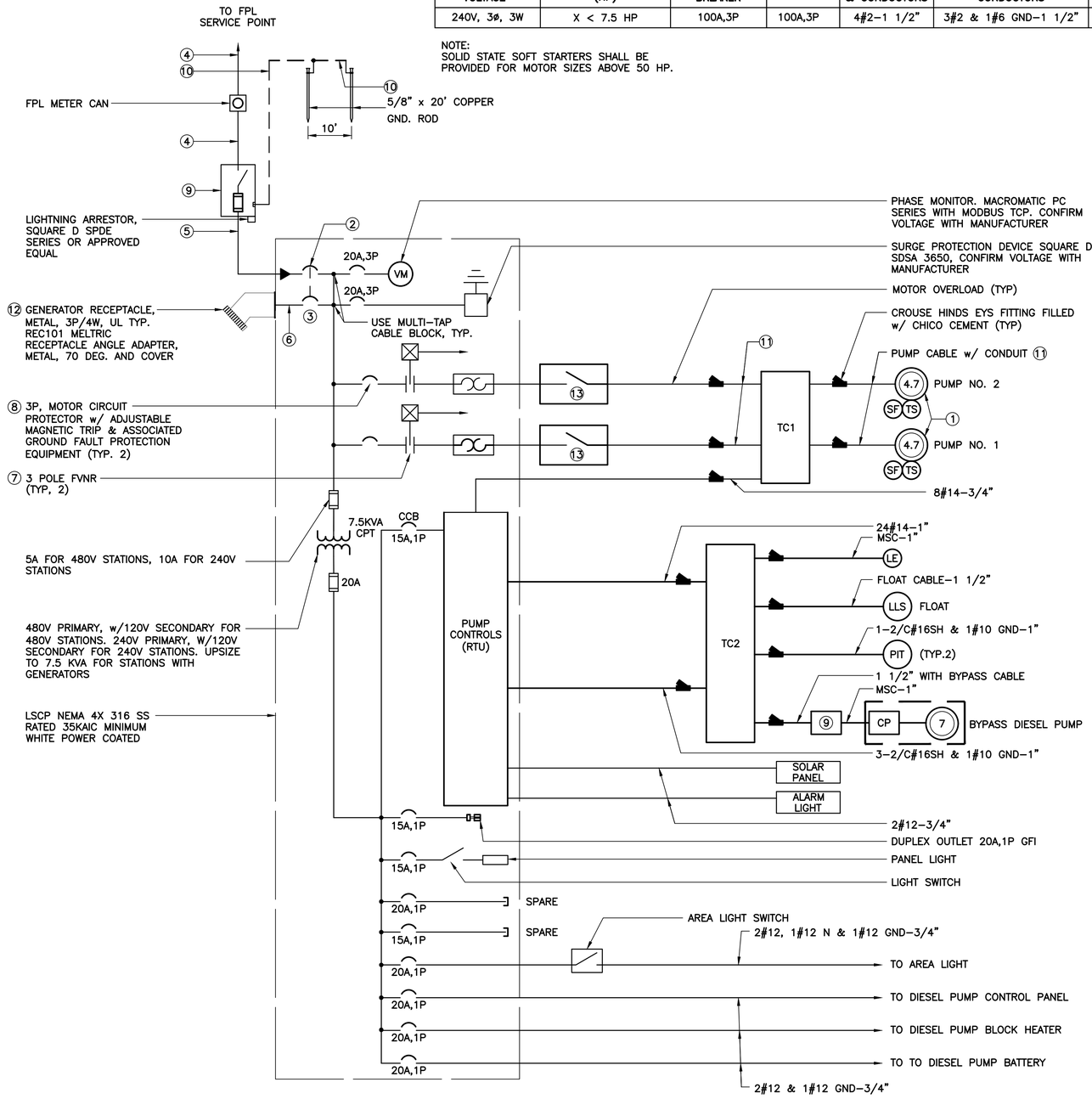

LIFT STATION CONTROL PANEL (LSCP) SINGLE LINE DIAGRAM

NOTES:

A. FUSES SHALL BE BUSSMAN CLASS J CURRENT LIMITING.

B. NEMA 4X 316 SS FUSED SWITCH AND ASSOCIATED REJECTION CLIPS AND 4W NEUTRAL KIT w/ CURRENT LIMITING FUSES. SWITCH SHALL BE EQUIPPED w/ SPLIT BOLTS ON LOAD SIDE FOR INSTALLATION OF LIGHTNING ARRESTOR (SERVICE ENTRANCE RATED).

C. B PHASE (HIGH LEG) SHALL NOT BE USED FOR SINGLE PHASE CIRCUITS ON ALL 120/240V-3φ OPEN DELTA SERVICES.

D. ALL CONTROL PANELS SHALL BE U.L. LABELED AND SHALL COMPLY WITH ARTICLE 409 OF THE N.E.C.

LSCP LOAD TABULATION

240V-3φ-4W

DESCRIPTION	LOAD	AMPACITY
PUMPS	2 @ 4.7 HP	= 24.80 AMPS
TRANSFORMER	1 @ 7.5 KVA	= 18.04 AMPS
	CONNECTED LOAD	= 42.84 AMPS
② SERVICE ENTRANCE =	42.84 AMPS + (0.25)(12.40)	= (45.94) AMPS

NOTES:

① AMPACITIES PER TABLE 430.250 OF THE NATIONAL ELECTRICAL CODE.

② SERVICE ENTRANCE MINIMUM SIZE AS PER ARTICLE 230 OF THE NATIONAL ELECTRIC CODE.

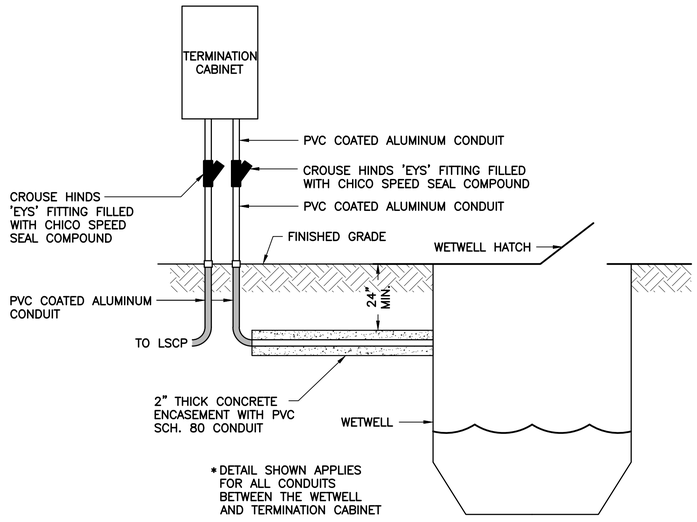

CONDUIT INSTALLATION DETAIL

N.T.S.

100% PLANS - NOT FOR CONSTRUCTION

EDA
Electrical Design Associates
6965 PIAZZA GRANDE AVE., STE. 311
ORLANDO, FLORIDA 32835
PHONE: (407) 745-5604
FAX: (407) 745-5603
C.O.A. No. 8079
MICHAEL J. CAHILL, P.E.
Florida P.E. No. 70837

This document, together with the concepts and designs presented herein, as an instrument of service, is intended only for the specific purpose and client for which it was prepared. Reuse of and improper reliance on this document without written authorization and adaptation by Kimley-Horn and Associates, Inc. shall be without liability to Kimley-Horn and Associates, Inc.

C:\Users\StephanieVickers\Electrical Design Associates\ACTIVE-ORL - Documents\Kimley-Horn\Port Orange - Lower LS\02_100PDsng\E04.dwg, 8/1/2024 1:37:06 PM, DWG To PDF.pc3

No.	REVISIONS	DATE	BY

Kimley»Horn

© 2024 KIMLEY-HORN AND ASSOCIATES, INC.

1530 CORNERSTONE BLVD, BUILDING 1, SUITE 200A,
DAYTONA BEACH, FL 32117
PHONE: 407-898-1511
WWW.KIMLEY-HORN.COM CA 00035106

KHA PROJECT	049204106
DATE	08/2024
SCALE	AS SHOWN
DESIGNED BY	MJC
DRAWN BY	SDV
CHECKED BY	WCN

CITY OF PORT ORANGE FLORIDA 1867

LOWES LIFT STATION MODIFICATIONS

PREPARED FOR
CITY OF PORT ORANGE

LICENSED PROFESSIONAL

MICHAEL J. CAHILL

FL LICENSE NUMBER
70837

DATE:

LIFT STATION

SINGLE LINE DIAGRAM

SHEET NUMBER

E4

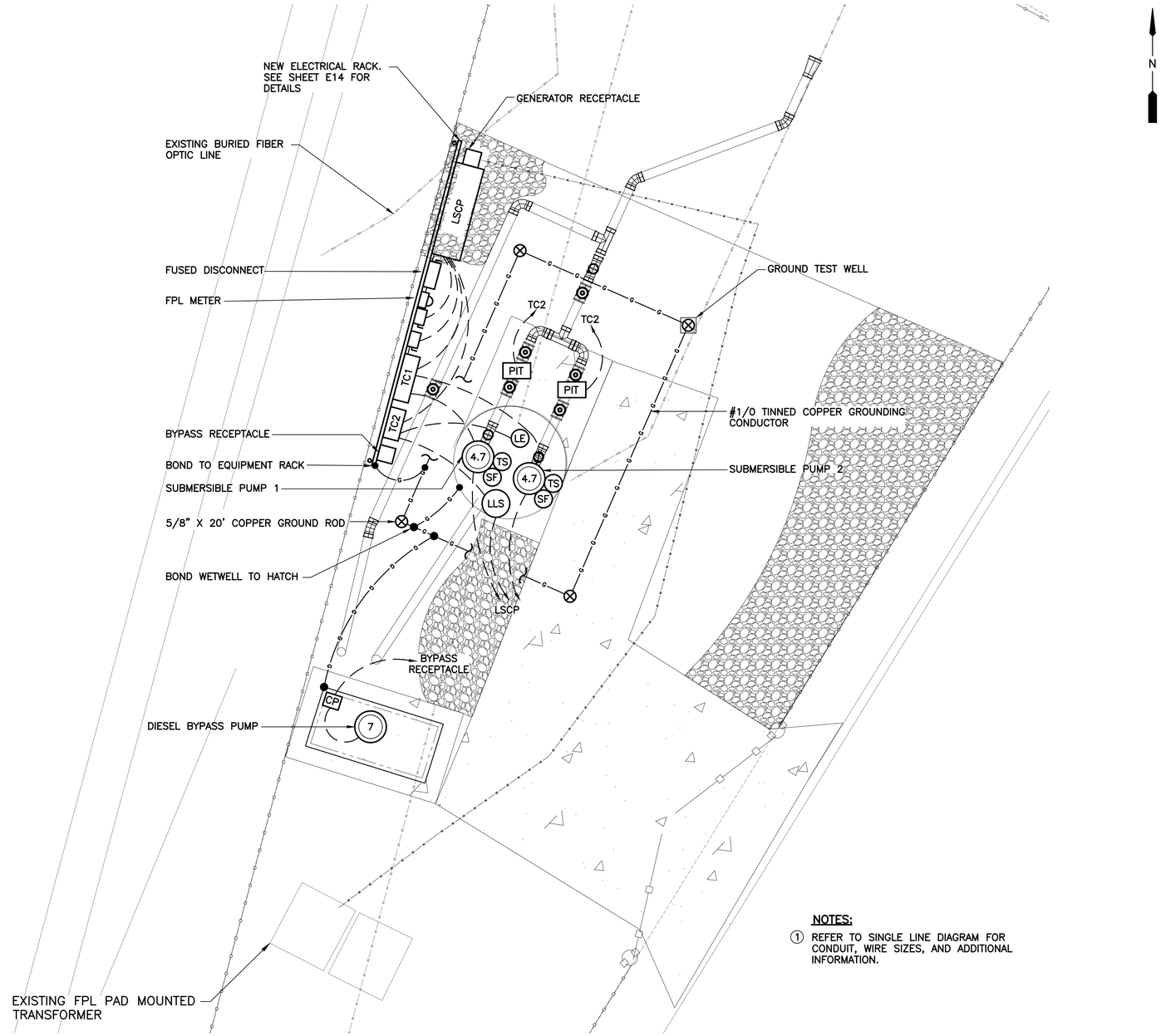

NOTES:

1. REFER TO SINGLE LINE DIAGRAM FOR CONDUIT, WIRE SIZES, AND ADDITIONAL INFORMATION.

PUMP STATION PLAN VIEW

SCALE: 1/4"=1'-0"

1 0 1 2 3 7'

100% PLANS - NOT FOR CONSTRUCTION

EDA
Electrical Design Associates
6965 PIAZZA GRANDE AVE., STE. 311
ORLANDO, FLORIDA 32835
PHONE: (407) 745-5604
FAX: (407) 745-5603
C.O.A. No. 8079
MICHAEL J. CAHILL, P.E.
Florida P.E. No. 70837

No.	REVISIONS	DATE	BY

Kimley»Horn

© 2024 KIMLEY-HORN AND ASSOCIATES, INC.

1530 CORNERSTONE BLVD, BUILDING 1, SUITE 200A,
DAYTONA BEACH, FL 32117
PHONE: 407-898-1511
WWW.KIMLEY-HORN.COM CA 00035106

KHA PROJECT	049204106
DATE	08/2024
SCALE	AS SHOWN
DESIGNED BY	MJC
DRAWN BY	SDV
CHECKED BY	WCN

CITY OF PORT ORANGE 1867 FLORIDA

LOWES LIFT STATION MODIFICATIONS

PREPARED FOR
CITY OF PORT ORANGE

LICENSED PROFESSIONAL

MICHAEL J. CAHILL

FL LICENSE NUMBER
70837

DATE:

LIFT STATION

PUMP STATION POWER AND GROUNDING PLAN VIEW

SHEET NUMBER
E5

This document, together with the concepts and designs presented herein, as an instrument of service, is intended only for the specific purpose and client for which it was prepared. Reuse of and improper reliance on this document without written authorization and adaptation by Kimley-Horn and Associates, Inc. shall be without liability to Kimley-Horn and Associates, Inc.

C:\Users\StephanieVickers\Electrical Design Associates\ACTIVE ORL - Documents\Kimley-Horn\Port Orange - Lowe's LS\02_100%dwg\E05.dwg, 8/1/2024 1:37:13 PM, DWG To PDF.pc3

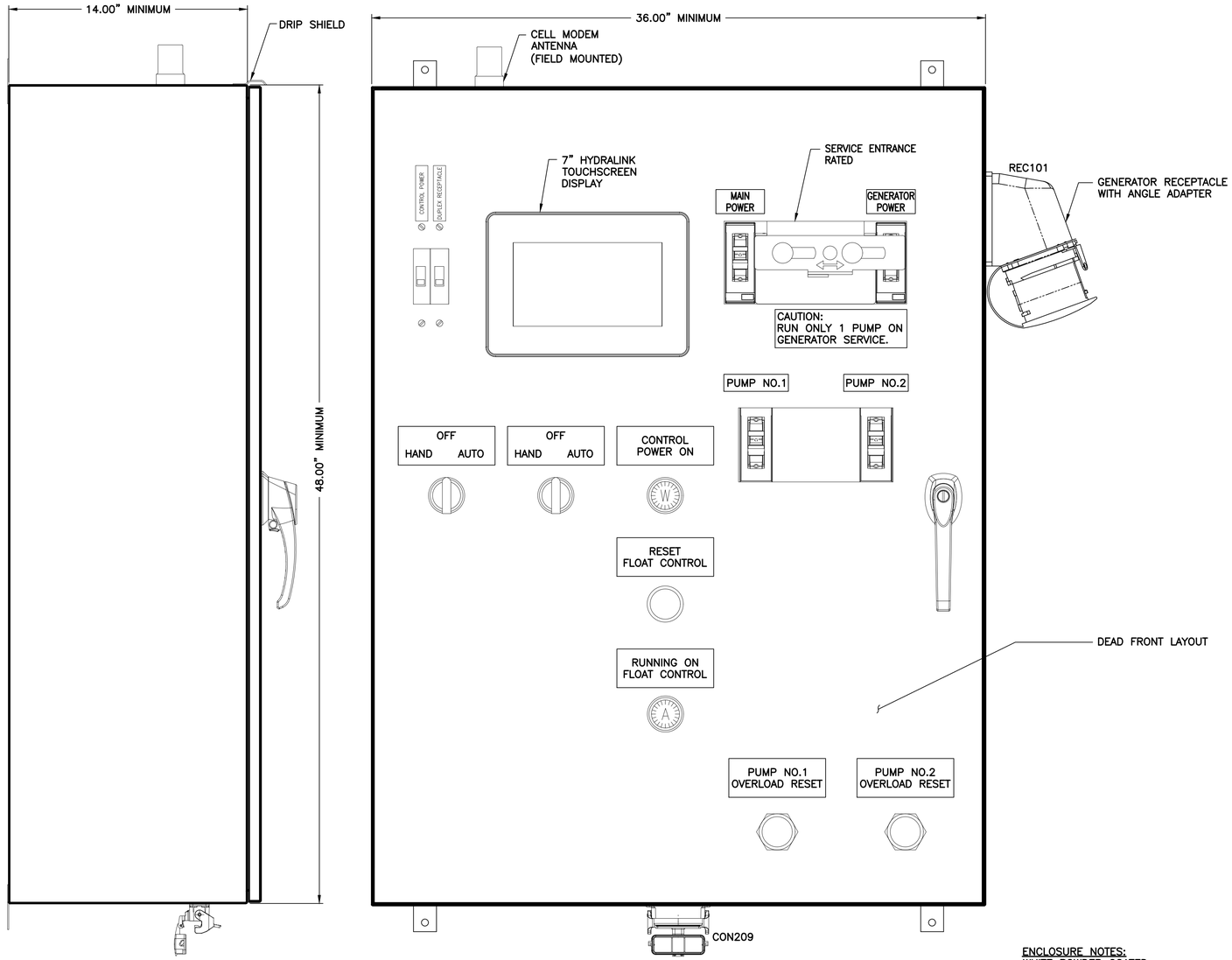

ENCLOSURE NOTES:
WHITE POWDER COATED
NEMA/UL TYPE 4X SS
ENCLOSED INDUSTRIAL
CONTROL PANEL

ENCLOSURE DETAIL

SCALE: N.T.S.

EDA
Electrical Design Associates
6965 PIAZZA GRANDE AVE., STE. 311
ORLANDO, FLORIDA 32835
PHONE: (407) 745-5604
FAX: (407) 745-5603
C.O.A. No. 8079
MICHAEL J. CAHILL, P.E.
Florida P.E. No. 70837

100% PLANS - NOT FOR CONSTRUCTION

This document, together with the concepts and designs presented herein, as an instrument of service, is intended only for the specific purpose and client for which it was prepared. Reuse of and improper reliance on this document without written authorization and adaptation by Kimley-Horn and Associates, Inc. shall be without liability to Kimley-Horn and Associates, Inc.

No.	REVISIONS	DATE	BY

Kimley»Horn
© 2024 KIMLEY-HORN AND ASSOCIATES, INC.
1530 CORNERSTONE BLVD, BUILDING 1, SUITE 200A,
DAYTONA BEACH, FL 32117
PHONE: 407-898-1511
WWW.KIMLEY-HORN.COM CA 00035106

KHA PROJECT	049204106
DATE	08/2024
SCALE	AS SHOWN
DESIGNED BY	MJC
DRAWN BY	SDV
CHECKED BY	WCN

CITY OF PORT ORANGE 1867 FLORIDA

LOWES LIFT STATION MODIFICATIONS

PREPARED FOR
CITY OF PORT ORANGE

LICENSED PROFESSIONAL

MICHAEL J. CAHILL

FL LICENSE NUMBER
70837

DATE:

LIFT STATION

ENCLOSURE DETAIL

SHEET NUMBER
E6

C:\Users\StephanieVickers\Electrical Design Associates\ACTIVE ORL - Documents\Kimley-Horn\Port Orange - Lowe's LS02_10PO\dwg\E06.dwg 8/1/2024 1:37:18 PM, DWG To PDF.pc3

This document, together with the concepts and designs presented herein, as an instrument of service, is intended only for the specific purpose and client for which it was prepared. Reuse of and improper reliance on this document without written authorization and adaptation by Kimley-Horn and Associates, Inc. shall be without liability to Kimley-Horn and Associates, Inc.

C:\Users\Stephanie\Vickers\Electrical Design Associates\ACTIVE-ORL - Documents\Kimley-Horn\Port Orange - Lowe's LS\02_100P\dwg\E07.dwg, 8/1/2024 1:37:22 PM, DWG To PDF.pc3

TERMINAL BLOCK DETAIL

BUSSING TERMINALS
15–UT4 2–UT4PE

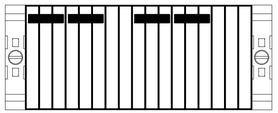

FIELD WIRING TERMINALS
42–UT2.5, 2–UT2.5PE

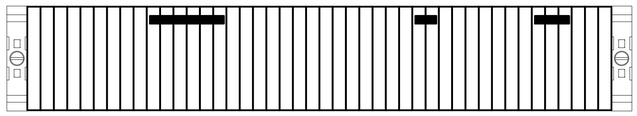

INTRINSICALLY SAFE TERMINAL
STRIP
1–UT4PE

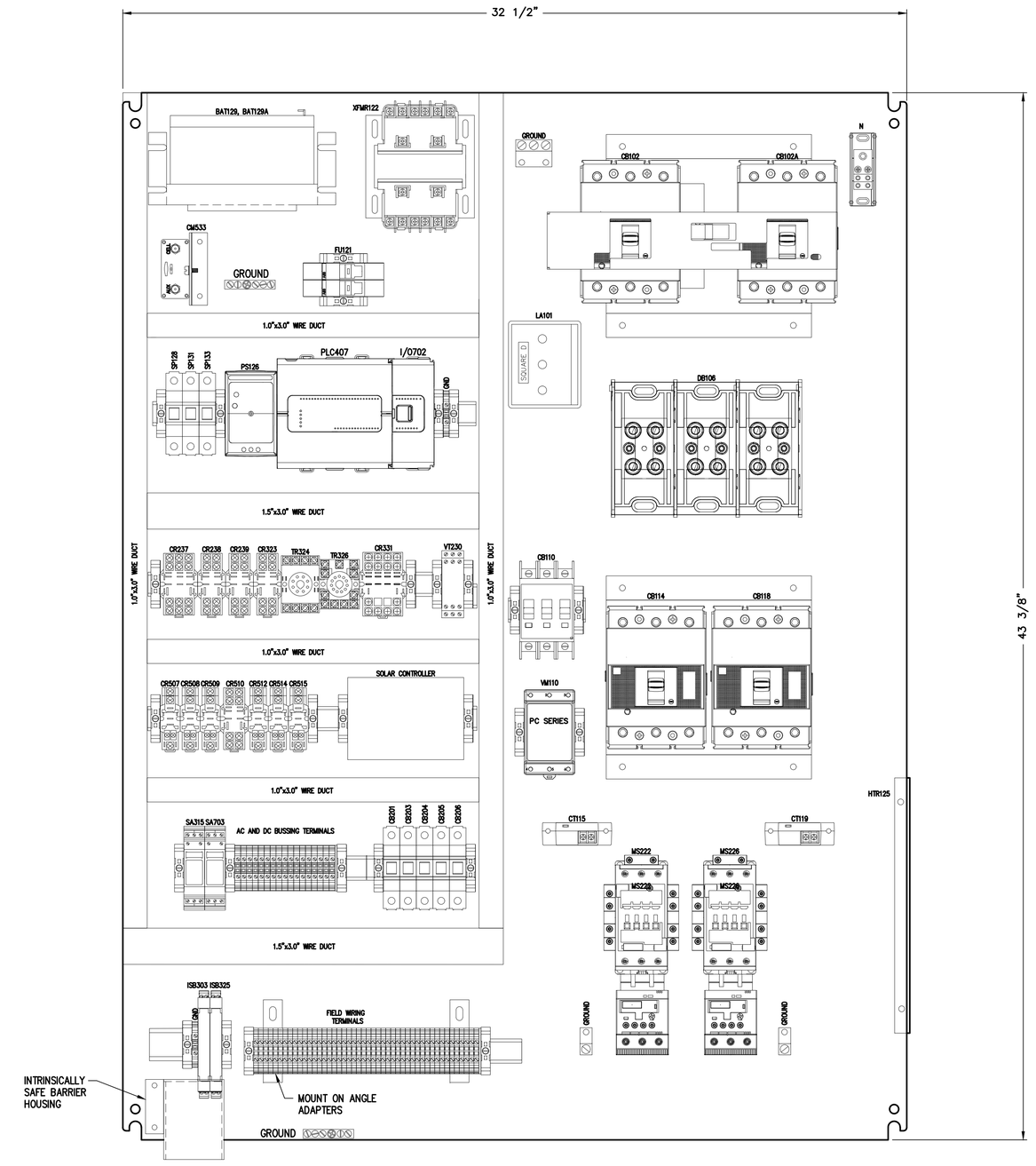

SUB PANEL LAYOUT

SCALE: N.T.S.

EDA
Electrical Design Associates
6965 PIAZZA GRANDE AVE., STE. 311
ORLANDO, FLORIDA 32835
PHONE: (407) 745-5604
FAX: (407) 745-5603
C.O.A. No. 8079
MICHAEL J. CAHILL, P.E.
Florida P.E. No. 70837

100% PLANS - NOT FOR CONSTRUCTION

No.	REVISIONS	DATE	BY

Kimley»Horn
© 2024 KIMLEY-HORN AND ASSOCIATES, INC.
1530 CORNERSTONE BLVD, BUILDING 1, SUITE 200A,
DAYTONA BEACH, FL 32117
PHONE: 407-898-1511
WWW.KIMLEY-HORN.COM CA 00035106

KHA PROJECT	049204106
DATE	08/2024
SCALE	AS SHOWN
DESIGNED BY	MJC
DRAWN BY	SDV
CHECKED BY	WCN

LOWES LIFT STATION MODIFICATIONS

PREPARED FOR
CITY OF PORT ORANGE

LICENSED PROFESSIONAL
MICHAEL J. CAHILL
FL LICENSE NUMBER
70837
DATE:

LIFT STATION

SUB PANEL LAYOUT

SHEET NUMBER
E7

This document, together with the concepts and designs presented herein, as an instrument of service, is intended only for the specific purpose and client for which it was prepared. Reuse of and improper reliance on this document without written authorization and adaptation by Kimley-Horn and Associates, Inc. shall be without liability to Kimley-Horn and Associates, Inc.

C:\Users\StephanieVickers\Electrical Design Associates\ACTIVE ORL - Documents\Kimley-Horn\Port Orange - Lowe's LS\02_100P\dwg\E08.dwg 8/1/2024 1:37:39 PM, DWG To PDF.pc3

SEE E-02 FOR RECEPTACLES

INCOMING POWER

L1 L2 L3 N GND

SUITABLE FOR USE AS SERVICE EQUIPMENT. BOND NEUTRAL TO GROUND PER THE N.E.C.

REC101
GENERATOR RECEPTACLE AND ANGLE ADAPTER

LA101
(SDSA)
SQUARE D
SPD

HIGH LEG USE ONLY

MECHANICAL INTERLOCK

CB102
L102A L102B L102C
L101A L101B L101C CB102A

GND

L102A
L102B
L102C
N

DB106
TOUCH SAFE

N TO LINE 539

CB110
L102A 110
L102B 111
L102C 112

VM110
MACROMATIC
PC SERIES
16 8
18 9
20 10

SET VM110 DIALS AS FOLLOWS:
VOLTAGE: 240/480 VAC
RESTART: 20 SEC
TRIP: 20 SEC
UNBALANCE: 5%

123
237
VOLTAGE MONITOR CONTACT ON LINE 237

ETHERNET CABLE
MODBUS TO PLC

CB114
L102A 114
L102B 115
L102C 116
L1 L2 L3 O.L.'S T1 T2 T3
M PUMP NO.1
CT115
24VDC
712
TO LINE 611
CBL612

CB118
L102A 118
L102B 119
L102C 120
L1 L2 L3 O.L.'S T1 T2 T3
M PUMP NO.2
CT119
24VDC
616
TO LINE 615
CBL616

L102A TO LINES 121
L102C TO LINES 121, 539

FROM LINE 120
L102A L102C
FU121 10A
122 122A
230V
1.5KVA TRANSFORMER XFMR122
120V

CB122 20A
123A
N123 N123
HTR125
123
CR

PS126
POWER SUPPLY/UPS CHARGER DRC-100B 24VDC 100W
TO LINE 138
TB1 TB2
SP128 128A 0.5A 128
12VDC 7.0 AH BATTERY WITH 3/16" TAB (TYP)
BAT129 BAT129A
129 129A
BATTERY CH2, 1.25A
AC OK 24VDC 416
BAT. LOW
AC OK TO PLC407 LINE 416
24COM
SP131 24VDC 1.0A 131
OUTPUT CH1, 2.25A
128A 129A TO LINE 209
TO LINE 211

SP133
SOLAR PANEL
133 133A
134 5.0A

CR
136 CR 136A CR 136B
TO LINE 128
SOLAR CONTROLLER
140

123 TO LINE 201,321

24VDC TO LINE 301,401,501,527,534,601

24COM TO LINE 301,401,501,527,536,601

ELEMENTARY DIAGRAM – 1
SCALE: N.T.S.

100% PLANS - NOT FOR CONSTRUCTION

EDA
Electrical Design Associates
6965 PIAZZA GRANDE AVE., STE. 311
ORLANDO, FLORIDA 32835
PHONE: (407) 745-5604
FAX: (407) 745-5603
C.O.A. No. 8079
MICHAEL J. CAHILL, P.E.
Florida P.E. No. 70837

No.	REVISIONS	DATE	BY

Kimley»Horn
© 2024 KIMLEY-HORN AND ASSOCIATES, INC.
1530 CORNERSTONE BLVD, BUILDING 1, SUITE 200A,
DAYTONA BEACH, FL 32117
PHONE: 407-898-1511
WWW.KIMLEY-HORN.COM CA 00035106

KHA PROJECT	049204106
DATE	08/2024
SCALE	AS SHOWN
DESIGNED BY	MJC
DRAWN BY	SDV
CHECKED BY	WCN

CITY OF PORT ORANGE 1867 FLORIDA

LOWES LIFT STATION MODIFICATIONS

PREPARED FOR
CITY OF PORT ORANGE

LICENSED PROFESSIONAL
MICHAEL J. CAHILL
FL LICENSE NUMBER
70837
DATE:

LIFT STATION

ELEMENTARY DIAGRAM - 1

SHEET NUMBER
E8

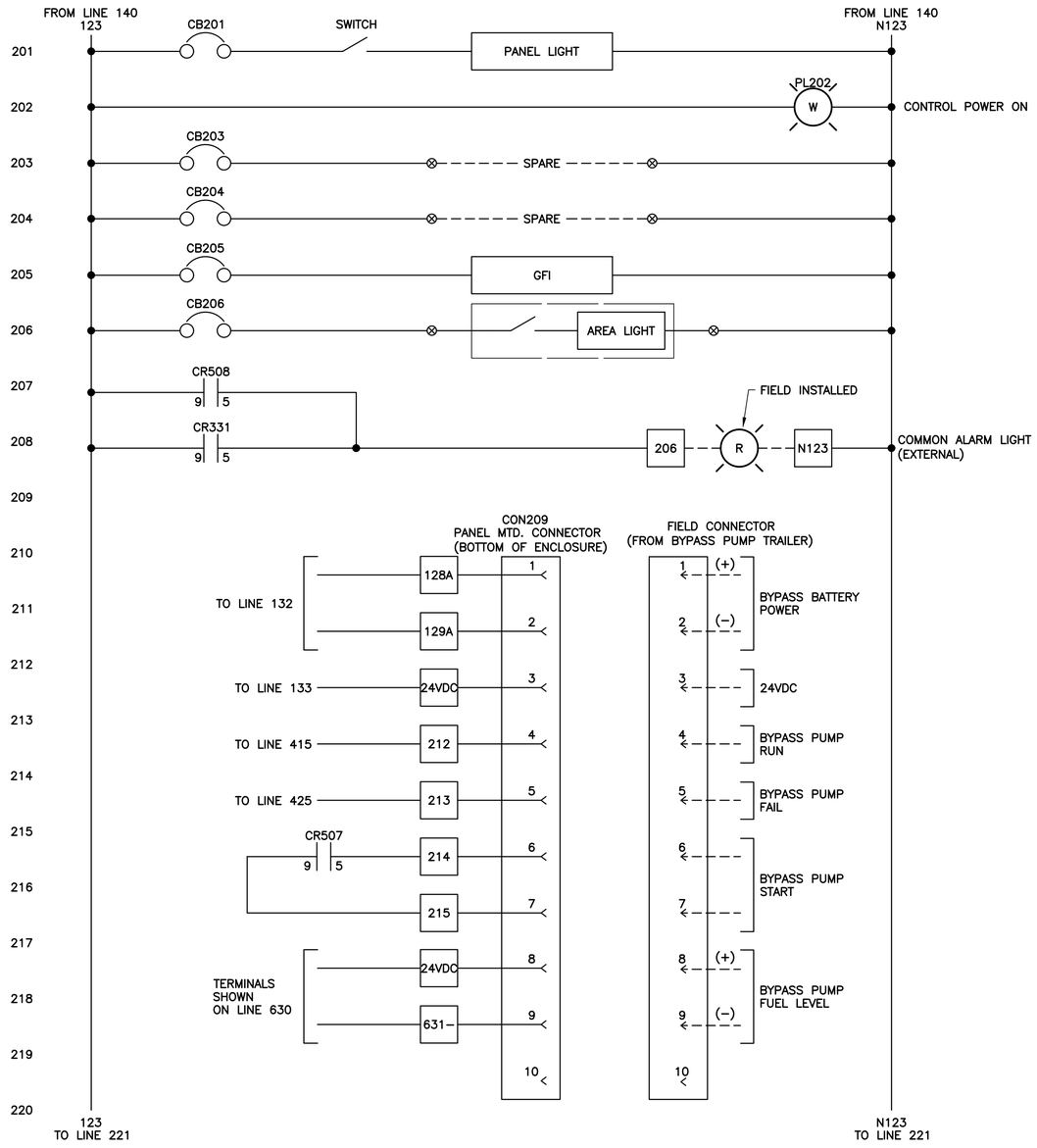

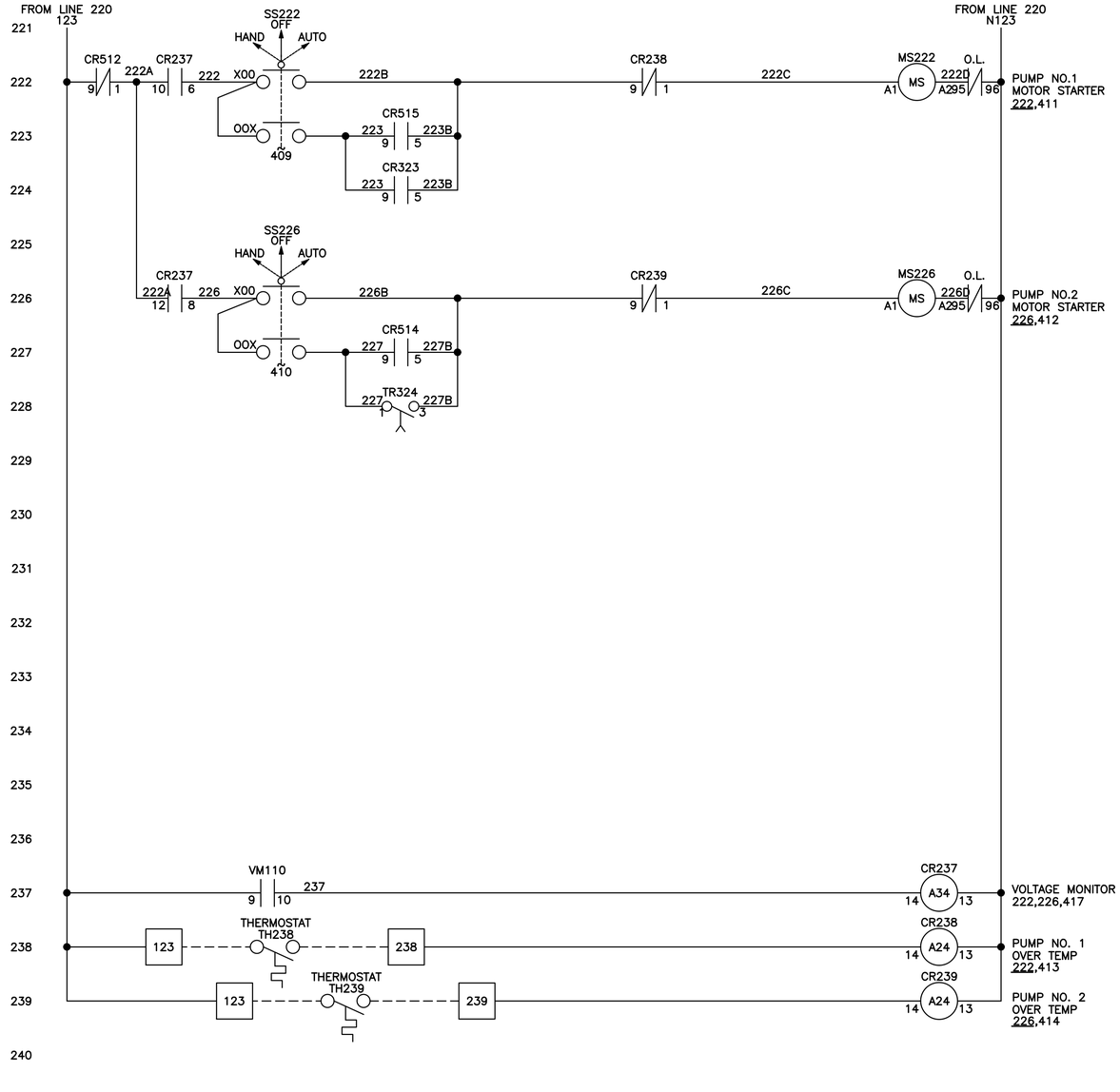

ELEMENTARY DIAGRAM – 2

SCALE: N.T.S.

100% PLANS - NOT FOR CONSTRUCTION

EDA
Electrical Design Associates
6965 PIAZZA GRANDE AVE., STE. 311
ORLANDO, FLORIDA 32835
PHONE: (407) 745-5604
FAX: (407) 745-5603
C.O.A. No. 8079
MICHAEL J. CAHILL, P.E.
Florida P.E. No. 70837

This document, together with the concepts and designs presented herein, as an instrument of service, is intended only for the specific purpose and client for which it was prepared. Reuse of and improper reliance on this document without written authorization and adaptation by Kimley-Horn and Associates, Inc. shall be without liability to Kimley-Horn and Associates, Inc.

C:\Users\StephanieVickers\Electrical Design Associates\ACTIVE ORL - Documents\Kimley-Horn\Port Orange - Lowe's LS02_100P\dwg\E09.dwg, 8/1/2024 1:37:33 PM, DWG To PDF.pc3

No.	REVISIONS	DATE	BY

Kimley»Horn
© 2024 KIMLEY-HORN AND ASSOCIATES, INC.
1530 CORNERSTONE BLVD, BUILDING 1, SUITE 200A,
DAYTONA BEACH, FL 32117
PHONE: 407-898-1511
WWW.KIMLEY-HORN.COM CA 00035106

KHA PROJECT	049204106
DATE	08/2024
SCALE	AS SHOWN
DESIGNED BY	MJC
DRAWN BY	SDV
CHECKED BY	WCN

CITY OF PORT ORANGE 1867 FLORIDA

LOWES LIFT STATION
MODIFICATIONS

PREPARED FOR
CITY OF PORT ORANGE

LICENSED PROFESSIONAL

MICHAEL J. CAHILL

FL LICENSE NUMBER
70837

DATE:

LIFT STATION

ELEMENTARY DIAGRAM - 2

SHEET NUMBER
E9

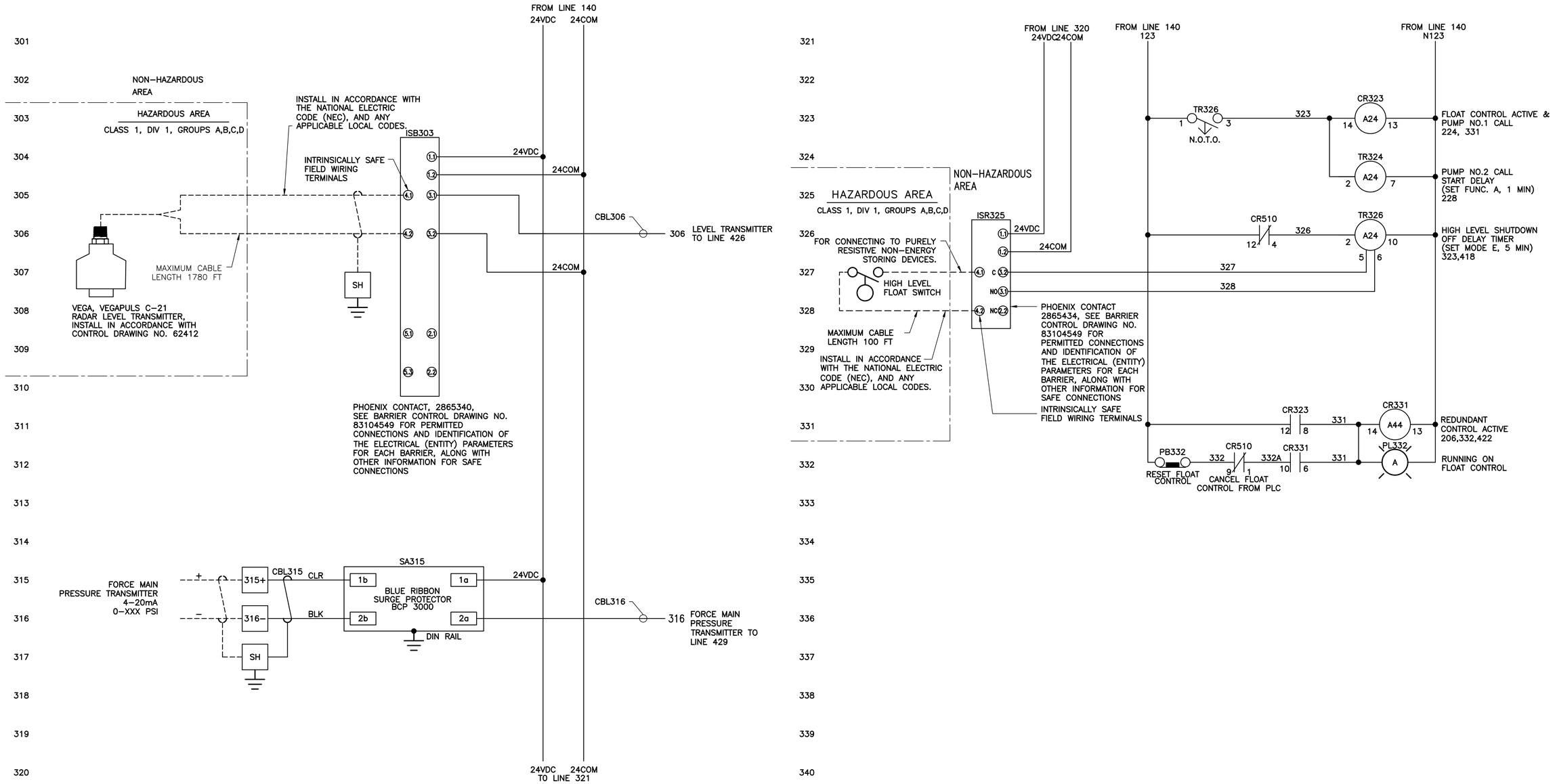

ELEMENTARY DIAGRAM – 3

SCALE: N.T.S.

100% PLANS - NOT FOR CONSTRUCTION

EDA
Electrical Design Associates
6965 PIAZZA GRANDE AVE., STE. 311
ORLANDO, FLORIDA 32835
PHONE: (407) 745-5604
FAX: (407) 745-5603
C.O.A. No. 8079
MICHAEL J. CAHILL, P.E.
Florida P.E. No. 70837

No.	REVISIONS	DATE	BY

Kimley»Horn

© 2024 KIMLEY-HORN AND ASSOCIATES, INC.

1530 CORNERSTONE BLVD, BUILDING 1, SUITE 200A,
DAYTONA BEACH, FL 32117
PHONE: 407-898-1511
WWW.KIMLEY-HORN.COM CA 00035106

KHA PROJECT	049204106
DATE	08/2024
SCALE	AS SHOWN
DESIGNED BY	MJC
DRAWN BY	SDV
CHECKED BY	WCN

LOWES LIFT STATION MODIFICATIONS

PREPARED FOR
CITY OF PORT ORANGE

LICENSED PROFESSIONAL
MICHAEL J. CAHILL
FL LICENSE NUMBER
70837
DATE:

LIFT STATION

ELEMENTARY DIAGRAM - 3

SHEET NUMBER
E10

This document, together with the concepts and designs presented herein, as an instrument of service, is intended only for the specific purpose and client for which it was prepared. Reuse of and improper reliance on this document without written authorization and adaptation by Kimley-Horn and Associates, Inc. shall be without liability to Kimley-Horn and Associates, Inc.

C:\Users\StephanieVickers\Electrical Design Associates\ACTIVE-ORL - Documents\Kimley-Horn\Port Orange - Lowe's LS\02_100P\dwg\E10.dwg, 8/1/2024 1:37:38 PM, DWG To PDF.pc3

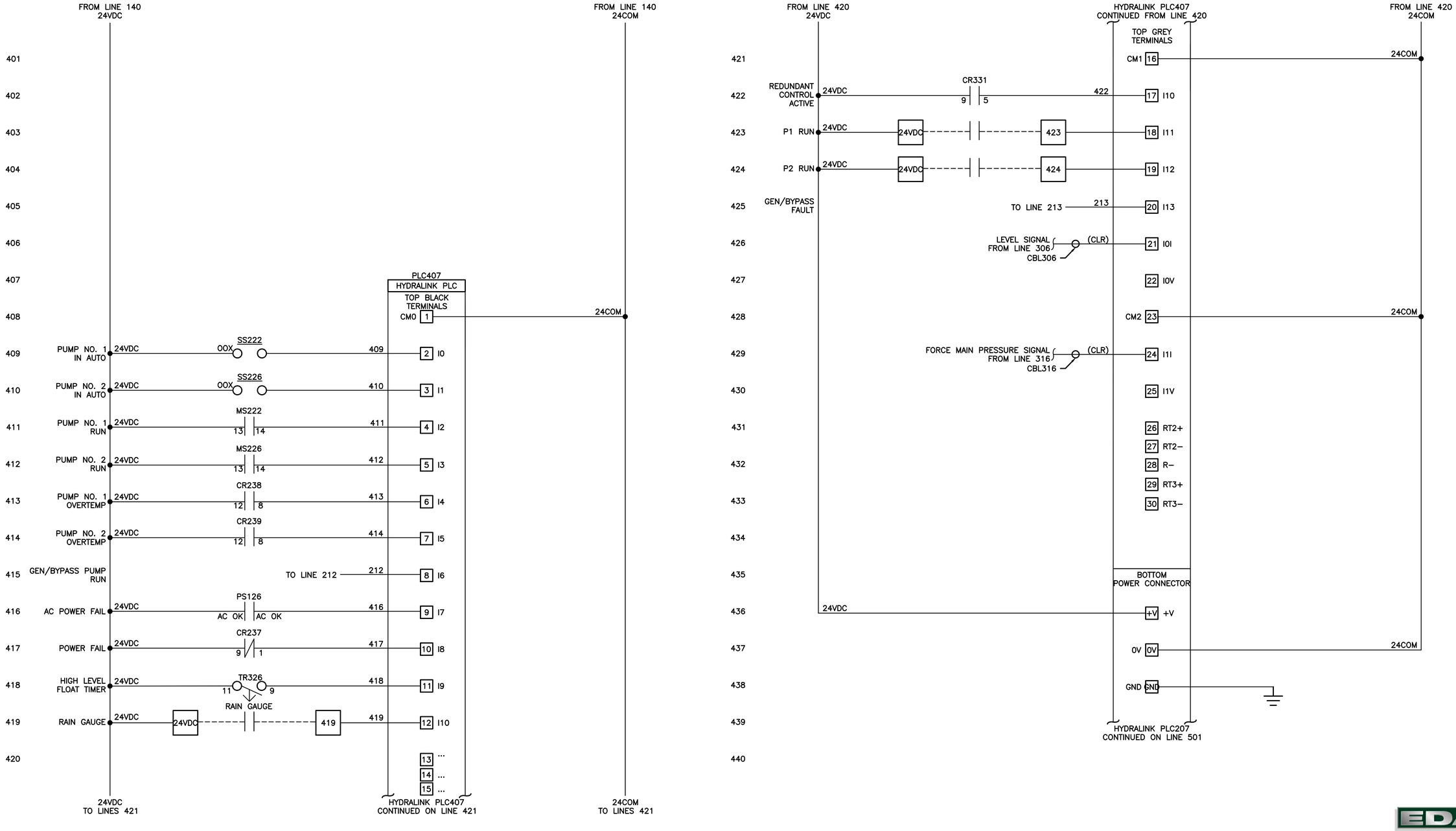

PLC I/O DIAGRAM

100% PLANS - NOT FOR CONSTRUCTION

This document, together with the concepts and designs presented herein, as an instrument of service, is intended only for the specific purpose and client for which it was prepared. Reuse of and improper reliance on this document without written authorization and adaptation by Kimley-Horn and Associates, Inc. shall be without liability to Kimley-Horn and Associates, Inc.

C:\Users\StephanieVickers\Electrical Design Associates\ACTIVE ORL - Documents\Kimley-Horn\Port Orange - Lowe's LS\02_100P.dwg\E11.dwg, 8/1/2024 1:37:42 PM, DWG To PDF.pc3

No.	REVISIONS	DATE	BY

Kimley»Horn
© 2024 KIMLEY-HORN AND ASSOCIATES, INC.
1530 CORNERSTONE BLVD, BUILDING 1, SUITE 200A,
DAYTONA BEACH, FL 32117
PHONE: 407-898-1511
WWW.KIMLEY-HORN.COM CA 00035106

KHA PROJECT	049204106
DATE	08/2024
SCALE	AS SHOWN
DESIGNED BY	MJC
DRAWN BY	SDV
CHECKED BY	WCN

LOWES LIFT STATION MODIFICATIONS

PREPARED FOR
CITY OF PORT ORANGE

LICENSED PROFESSIONAL
MICHAEL J. CAHILL
FL LICENSE NUMBER
70837
DATE:

LIFT STATION

PLC I/O DIAGRAM

SHEET NUMBER
E11

EDA
Electrical Design Associates
6965 PIAZZA GRANDE AVE., STE. 311
ORLANDO, FLORIDA 32835
PHONE: (407) 745-5604
FAX: (407) 745-5603
C.O.A. No. 8079
MICHAEL J. CAHILL, P.E.
Florida P.E. No. 70837

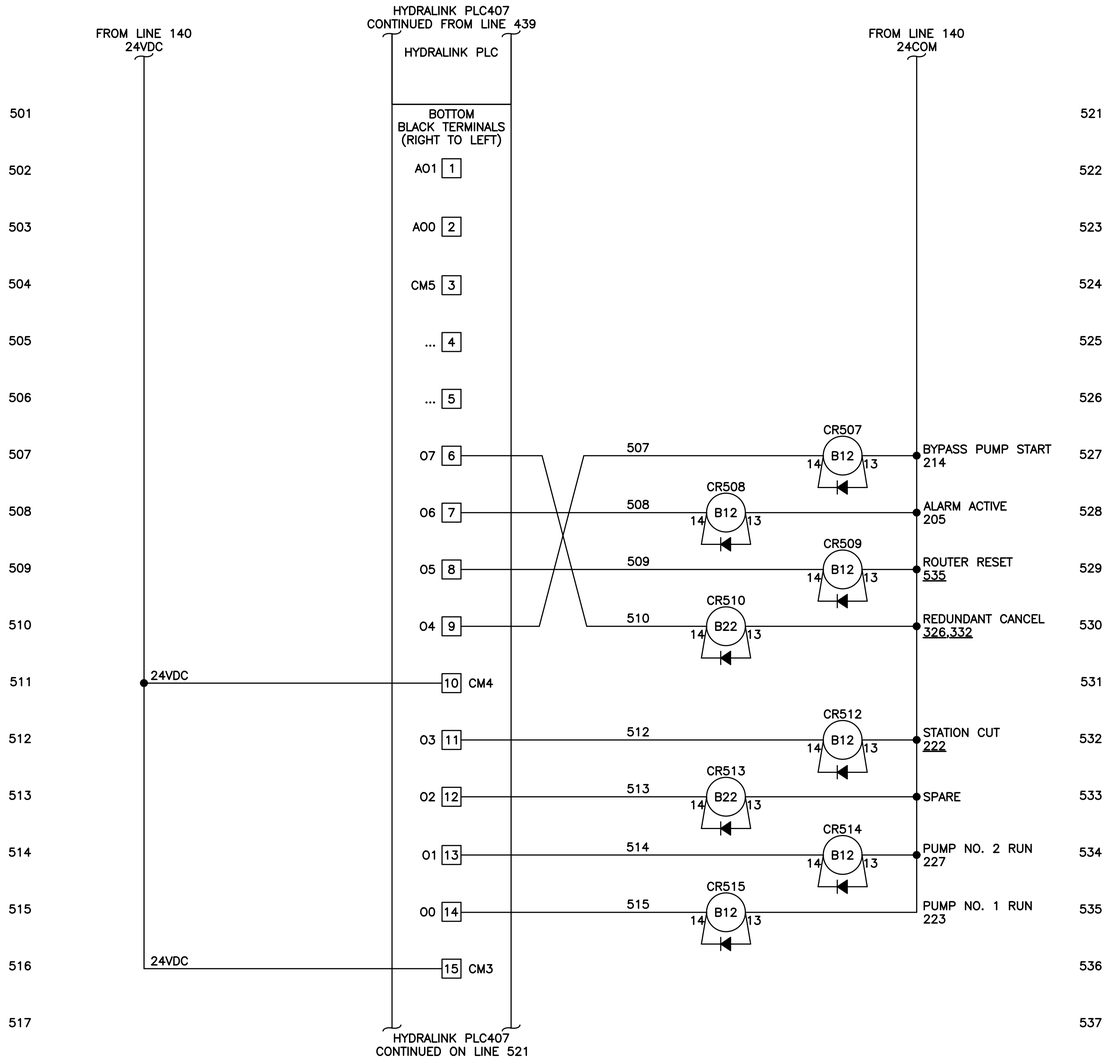

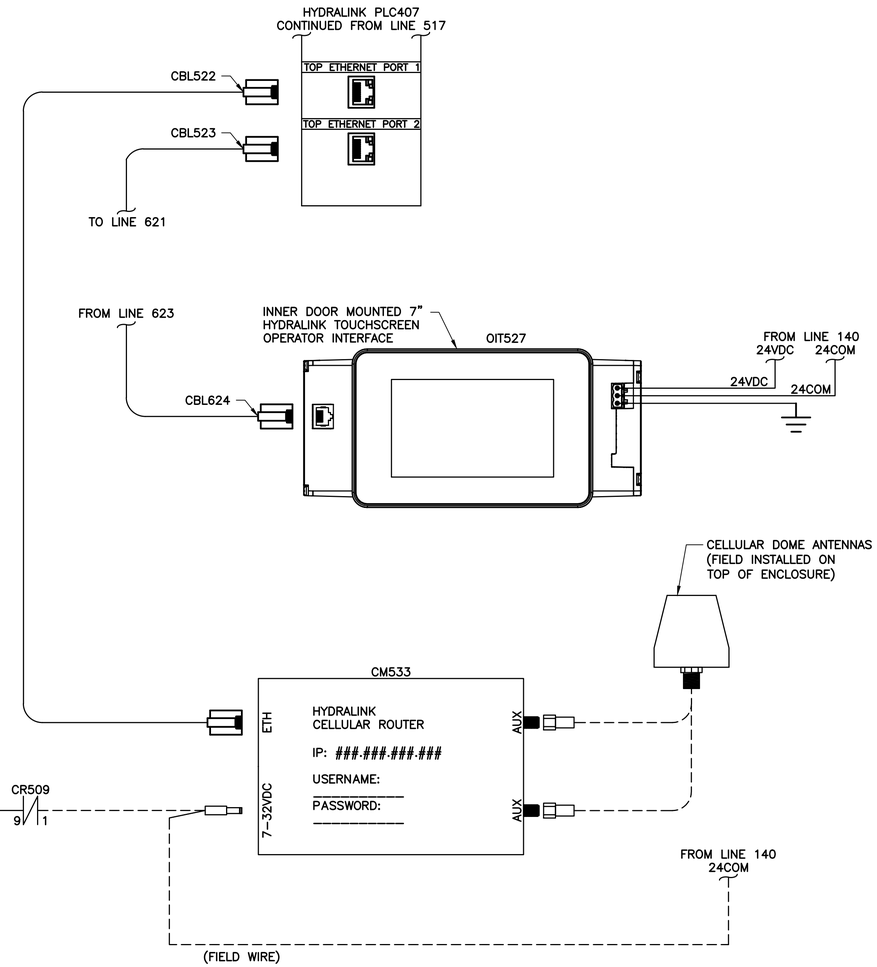

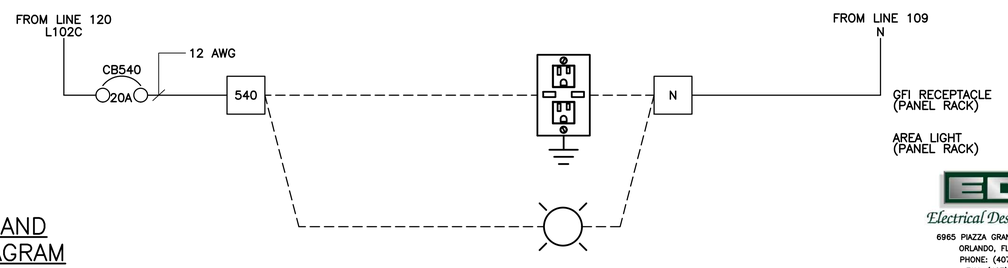

HYDRALINK PLC I/O AND
HYDRALINK MODEM DIAGRAM
SCALE: N.T.S.

100% PLANS - NOT FOR CONSTRUCTION

EDA
Electrical Design Associates
6965 PIAZZA GRANDE AVE., STE. 311
ORLANDO, FLORIDA 32835
PHONE: (407) 745-5604
FAX: (407) 745-5603
C.O.A. No. 8079
MICHAEL J. CAHILL, P.E.
Florida P.E. No. 70837

This document, together with the concepts and designs presented herein, as an instrument of service, is intended only for the specific purpose and client for which it was prepared. Reuse of and improper reliance on this document without written authorization and adaptation by Kimley-Horn and Associates, Inc. shall be without liability to Kimley-Horn and Associates, Inc.

No.	REVISIONS	DATE	BY

Kimley»Horn
© 2024 KIMLEY-HORN AND ASSOCIATES, INC.
1530 CORNERSTONE BLVD, BUILDING 1, SUITE 200A,
DAYTONA BEACH, FL 32117
PHONE: 407-898-1511
WWW.KIMLEY-HORN.COM CA 00035106

KHA PROJECT	049204106
DATE	08/2024
SCALE	AS SHOWN
DESIGNED BY	MJC
DRAWN BY	SDV
CHECKED BY	WCN

LOWES LIFT STATION
MODIFICATIONS

PREPARED FOR
CITY OF PORT ORANGE

LICENSED PROFESSIONAL
MICHAEL J. CAHILL
FL LICENSE NUMBER
70837
DATE:

LIFT STATION
PLC I/O HYDRALINK MODEM DIAGRAM

SHEET NUMBER
E12

C:\Users\StephanieVickers\Electrical Design Associates\ACTIVE ORL - Documents\Kimley-Horn\Port Orange - Lowe's LS\02_100%\dwg\E12.dwg, 8/1/2024 1:37:46 PM, DWG To PDF.pc3

This document, together with the concepts and designs presented herein, as an instrument of service, is intended only for the specific purpose and client for which it was prepared. Reuse of and improper reliance on this document without written authorization and adaptation by Kimley-Horn and Associates, Inc. shall be without liability to Kimley-Horn and Associates, Inc.

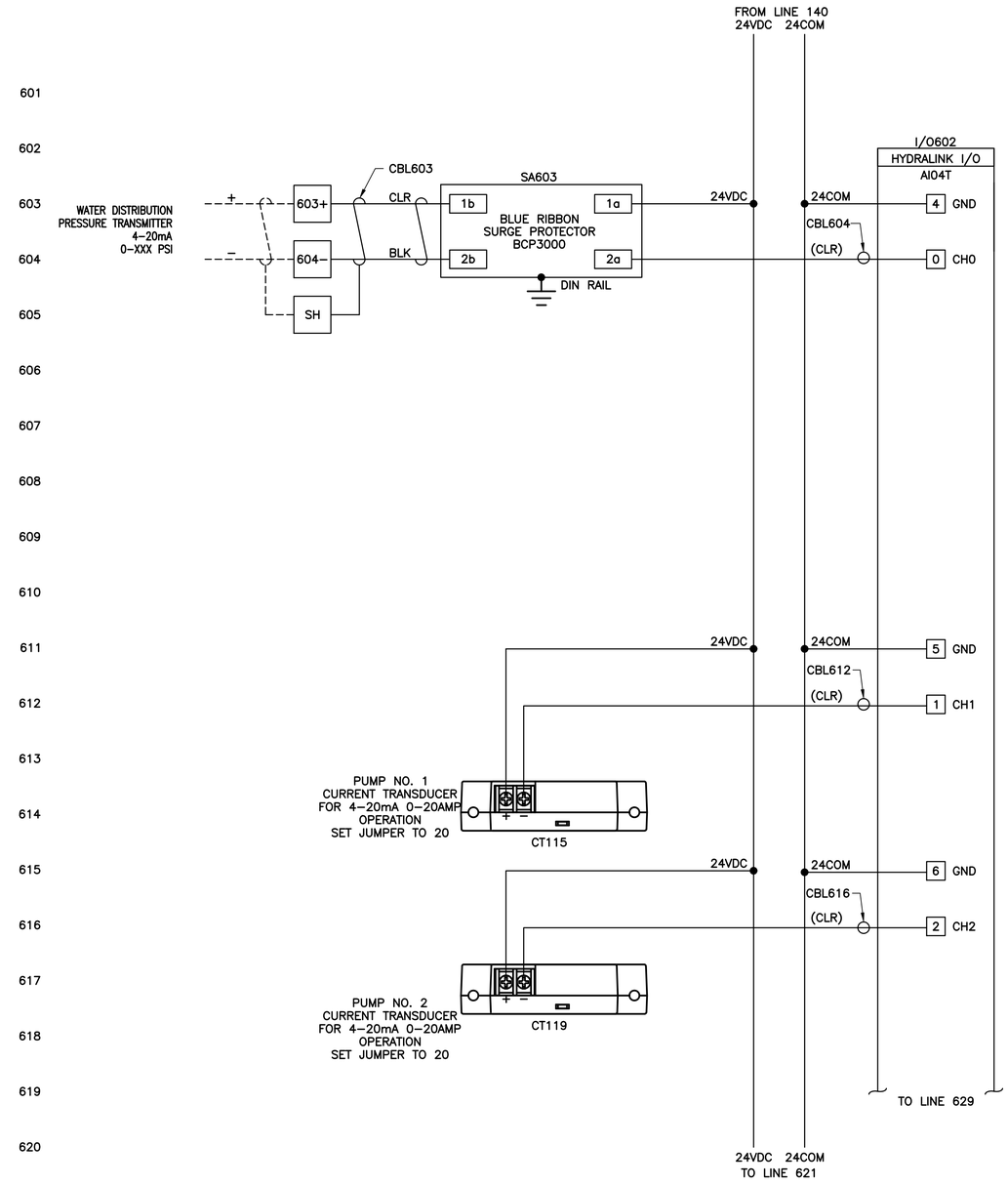

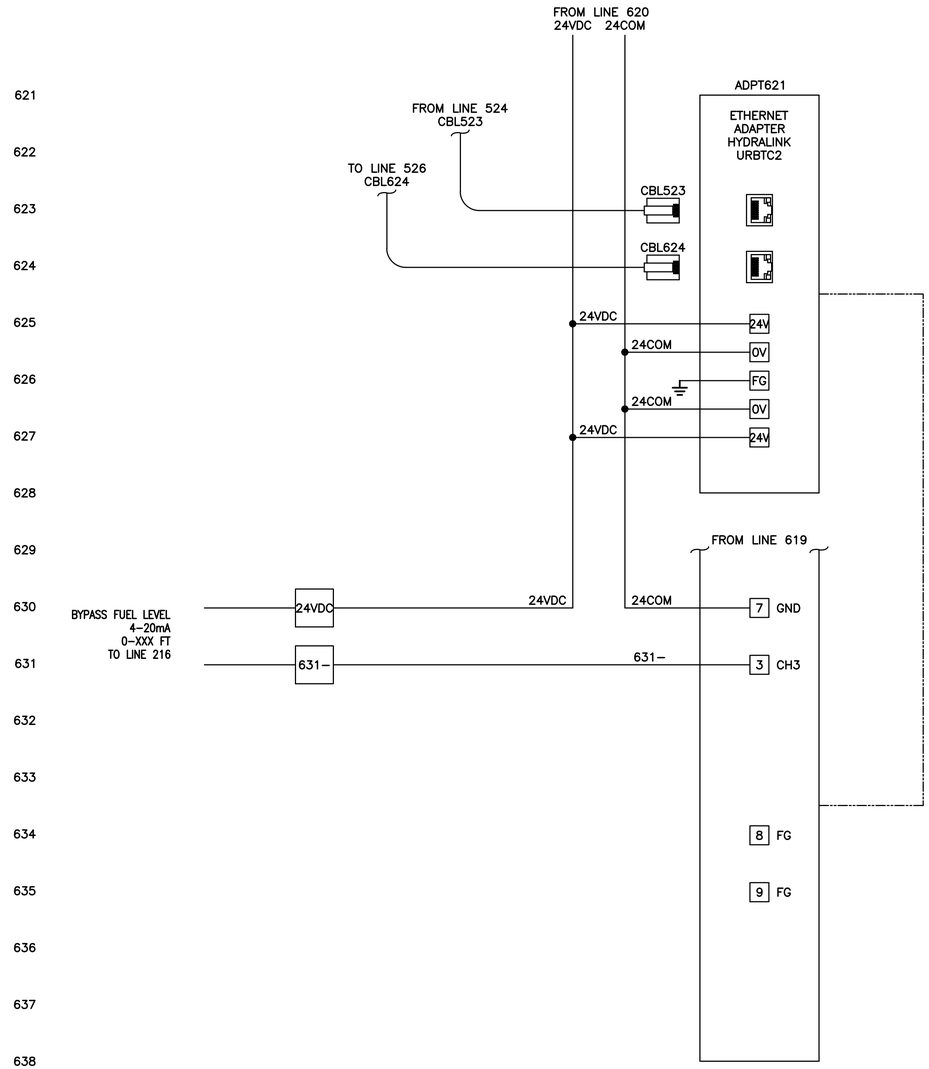

HYDRALINK ANALOG INPUT/OUTPUT MODULE

SCALE: N.T.S.

100% PLANS - NOT FOR CONSTRUCTION

EDA
Electrical Design Associates
6965 PIAZZA GRANDE AVE., STE. 311
ORLANDO, FLORIDA 32835
PHONE: (407) 745–5604
FAX: (407) 745–5603
C.O.A. No. 8079
MICHAEL J. CAHILL, P.E.
Florida P.E. No. 70837

No.	REVISIONS	DATE	BY

Kimley»Horn
© 2024 KIMLEY-HORN AND ASSOCIATES, INC.
1530 CORNERSTONE BLVD, BUILDING 1, SUITE 200A,
DAYTONA BEACH, FL 32117
PHONE: 407-898-1511
WWW.KIMLEY-HORN.COM CA 00035106

KHA PROJECT	049204106
DATE	08/2024
SCALE	AS SHOWN
DESIGNED BY	MJC
DRAWN BY	SDV
CHECKED BY	WCN

LOWES LIFT STATION
MODIFICATIONS

PREPARED FOR
CITY OF PORT ORANGE

LICENSED PROFESSIONAL

MICHAEL J. CAHILL

FL LICENSE NUMBER
70837

DATE:

LIFT STATION

HYDRALINK ANALOG INPUT/OUTPUT MODULE

SHEET NUMBER
E13

C:\Users\StephanieVickers\Electrical Design Associates\ACTIVE ORL - Documents\Kimley-Horn\Port Orange - Lowe's LS\02_100P\dwg\E13.dwg, 8/1/2024 1:37:51 PM, DWG To PDF.pc3

This document, together with the concepts and designs presented herein, as an instrument of service, is intended only for the specific purpose and client for which it was prepared. Reuse of and improper reliance on this document without written authorization and adaptation by Kimley-Horn and Associates, Inc. shall be without liability to Kimley-Horn and Associates, Inc.

C:\Users\StephanieVickers\Electrical Design Associates\ACTIVE-ORL - Documents\Kimley-Horn\Port Orange - Lowe's LS\02_100Pct\dwg\E14.dwg, 8/1/2024 1:37:55 PM, DWG To PDF.pc3

This area needed to be updated per new NFPA requirements. EYSR Seals can no longer be used in this application. Per Stephen Bailey.

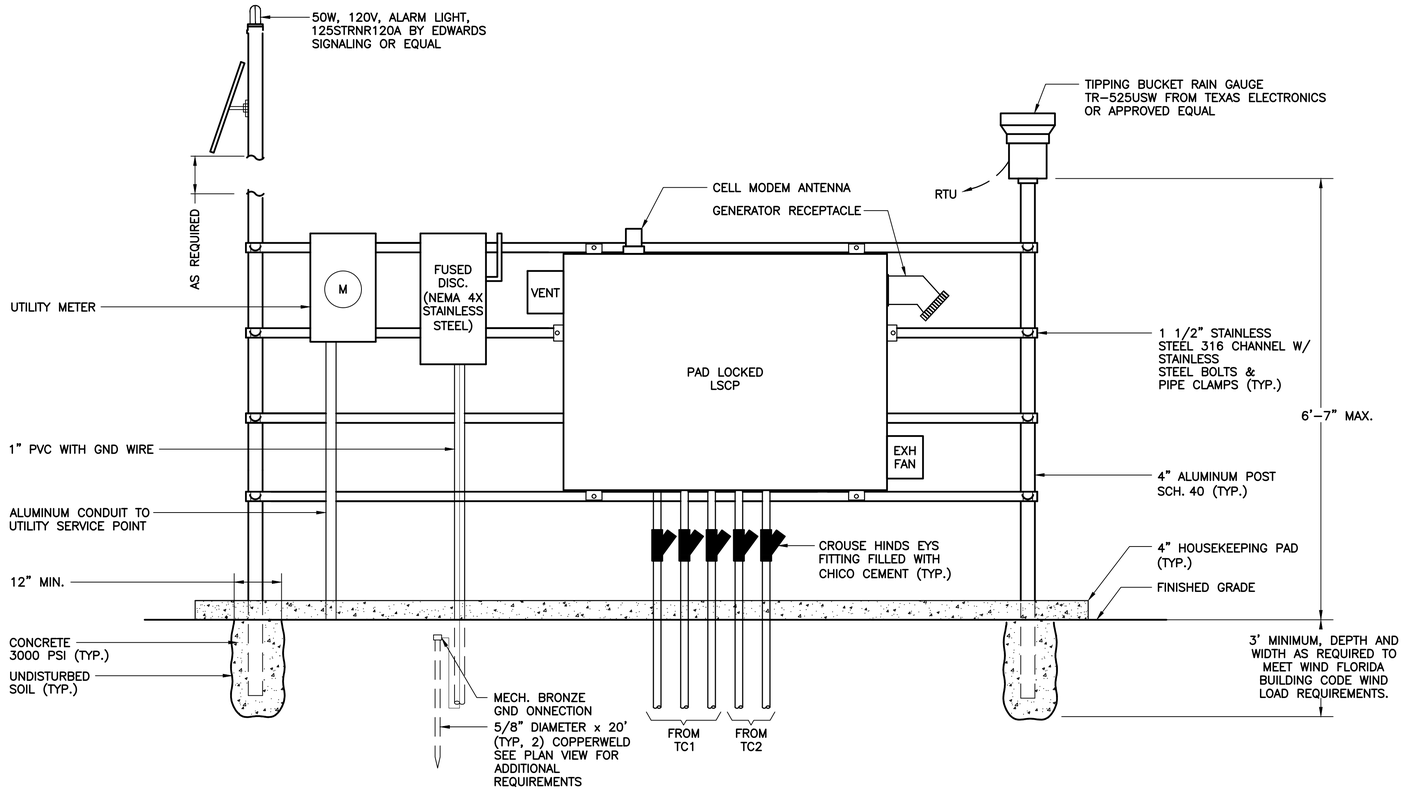

EQUIPMENT RACK DETAILS

N.T.S.

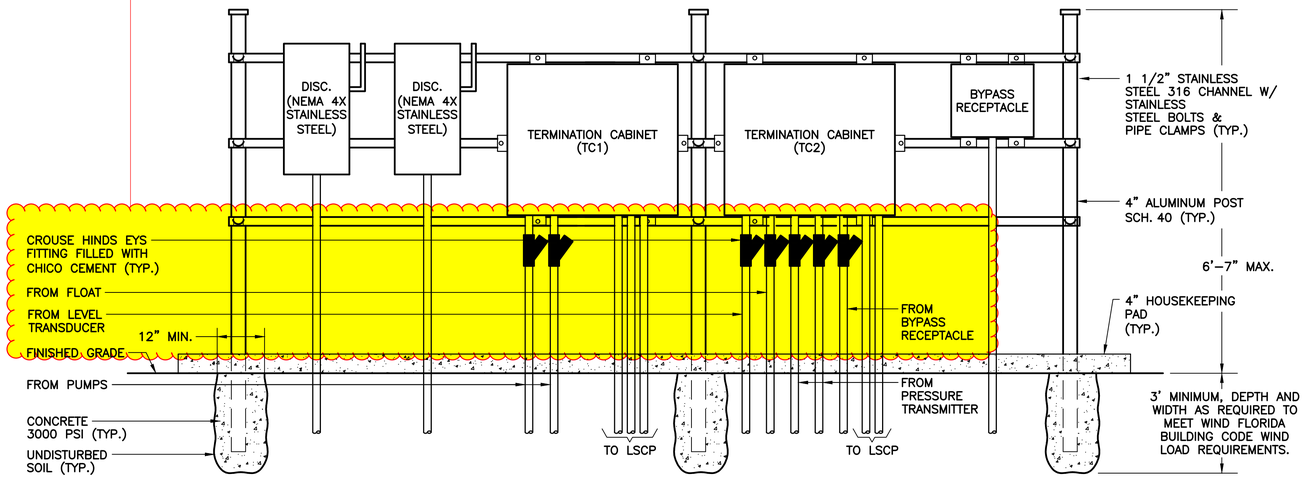

TERMINATION CABINET RACK DETAILS

N.T.S.

NOTES:

1. ALL MOUNTING HARDWARE SHALL BE OF 316 STAINLESS STEEL, UNLESS OTHERWISE NOTED.
2. CONTRACTOR SHALL SUBMIT SIGNED AND SEALED WIND LOAD CALCULATIONS FROM A STRUCTURAL ENGINEER LICENSED IN THE STATE OF FLORIDA. ELECTRICAL EQUIPMENT SERVICE RACK TO BE CERTIFIED PER FLORIDA BUILDING CODE.

EDA
Electrical Design Associates
6965 PIAZZA GRANDE AVE., STE. 311
ORLANDO, FLORIDA 32835
PHONE: (407) 745-5604
FAX: (407) 745-5603
C.O.A. No. 8079
MICHAEL J. CAHILL, P.E.
Florida P.E. No. 70837

100% PLANS - NOT FOR CONSTRUCTION

No.	REVISIONS	DATE	BY

Kimley»Horn
© 2024 KIMLEY-HORN AND ASSOCIATES, INC.
1530 CORNERSTONE BLVD, BUILDING 1, SUITE 200A,
DAYTONA BEACH, FL 32117
PHONE: 407-898-1511
WWW.KIMLEY-HORN.COM CA 00035106

KHA PROJECT	049204106
DATE	08/2024
SCALE	AS SHOWN
DESIGNED BY	MJC
DRAWN BY	SDV
CHECKED BY	WCN

CITY OF PORT ORANGE FLORIDA 1867

LOWES LIFT STATION MODIFICATIONS

PREPARED FOR
CITY OF PORT ORANGE

LICENSED PROFESSIONAL

MICHAEL J. CAHILL

FL LICENSE NUMBER
70837

DATE:

LIFT STATION

EQUIPMENT RACK DETAILS

SHEET NUMBER
E14

This document, together with the concepts and designs presented herein, as an instrument of service, is intended only for the specific purpose and client for which it was prepared. Reuse of and improper reliance on this document without written authorization and adaptation by Kimley-Horn and Associates, Inc. shall be without liability to Kimley-Horn and Associates, Inc.

C:\Users\StephanieVickers\Electrical Design Associates\ACTIVE ORL - Documents\Kimley-Horn\Port Orange - Lowe's LS\02_100Pdwg\E15.dwg, 8/1/2024 1:38:00 PM, DWG To PDF.pc3

JBOX ENCLOSURE:

NEMA 4X RATED, W/DRIP SHIELD. FABRICATED FROM TYPE 316 STAINLESS STEEL, POLISHED FINISH. OUTER DOOR HAS 3-POINT PAD-LOCKABLE HANDLE.

BACK PANEL:

FABRICATED FROM 12ga. STEEL WITH WHITE POLYESTER POWDER COAT FINISH.

NOTES:

1. EYSR FITTING. CONDUIT TO WETWELL.
2. PUMP CABLE
3. PUMP POWER TO LSCP.
4. EYS FITTING. CONDUIT TO LSCP
5. PUMP CONTROL TO LSCP.
6. TERMINAL BOX GROUND BAR.

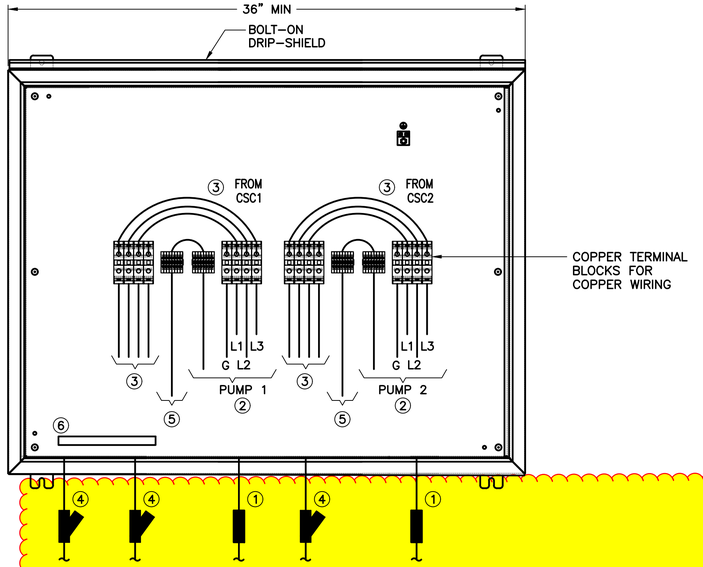

TC1 DETAIL

N.T.S.

JBOX ENCLOSURE:

NEMA 4X RATED, W/DRIP SHIELD. FABRICATED FROM TYPE 316 STAINLESS STEEL, POLISHED FINISH. OUTER DOOR HAS 3-POINT PAD-LOCKABLE HANDLE.

BACK PANEL:

FABRICATED FROM 12ga. STEEL WITH WHITE POLYESTER POWDER COAT FINISH.

NOTES:

1. EYSR FITTING. CONDUIT TO WETWELL.
2. PUMP CABLE
3. COPPER WIRE TO LSCP.
4. 24V AC CONTROL TERMINAL BLOCK
5. EYS FITTING. CONDUIT TO LSCP
6. PUMP CONTROL.
7. TERMINAL BOX GROUND BAR.

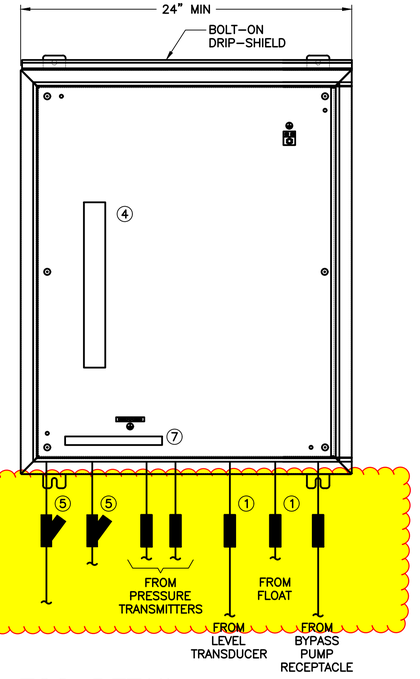

TC2 DETAIL

N.T.S.

This area needed to be updated per new NFPA requirements. EYSR Seals can no longer be used in this application. Per Stephen Bailey.

NOTES:

1. ROUND TAPERED ALUMINUM POLE. ALLOY 6063-T6 HAPCO RTA SERIES, NO EQUAL. CONTRACTOR TO PROVIDE STRUCTURAL POLE AND FOOTING DETAILED DRAWINGS INCLUDING WIND LOAD CALCULATIONS SIGNED AND SEALED BY A STATE OF FLORIDA STRUCTURAL ENGINEER. CALCULATIONS SHALL BE IN ACCORDANCE WITH THE FLORIDA BUILDING CODE.

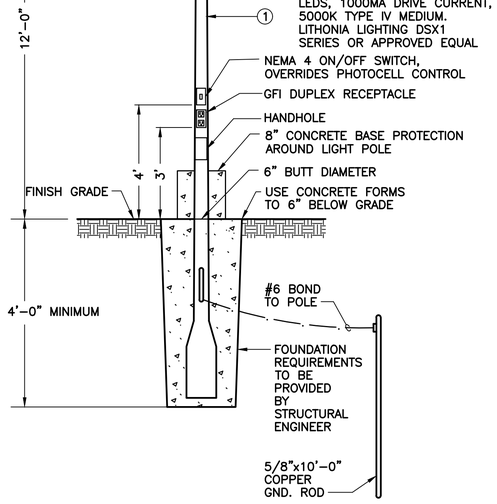

POLE MOUNTED TYPE FIXTURE DETAIL

N.T.S.

100% PLANS - NOT FOR CONSTRUCTION

EDA
Electrical Design Associates
6965 PIAZZA GRANDE AVE., STE. 311
ORLANDO, FLORIDA 32835
PHONE: (407) 745-5604
FAX: (407) 745-5603
C.O.A. No. 8079
MICHAEL J. CAHILL, P.E.
Florida P.E. No. 70837

No.	REVISIONS	DATE	BY

Kimley»Horn
© 2024 KIMLEY-HORN AND ASSOCIATES, INC.
1530 CORNERSTONE BLVD, BUILDING 1, SUITE 200A,
DAYTONA BEACH, FL 32117
PHONE: 407-898-1511
WWW.KIMLEY-HORN.COM CA 00035106

KHA PROJECT	049204106
DATE	08/2024
SCALE	AS SHOWN
DESIGNED BY	MJC
DRAWN BY	SDV
CHECKED BY	WCN

LOWES LIFT STATION MODIFICATIONS

PREPARED FOR
CITY OF PORT ORANGE

LICENSED PROFESSIONAL

MICHAEL J. CAHILL

FL LICENSE NUMBER
70837

DATE:

LIFT STATION

TERMINATION CABINET DETAILS

SHEET NUMBER
E15

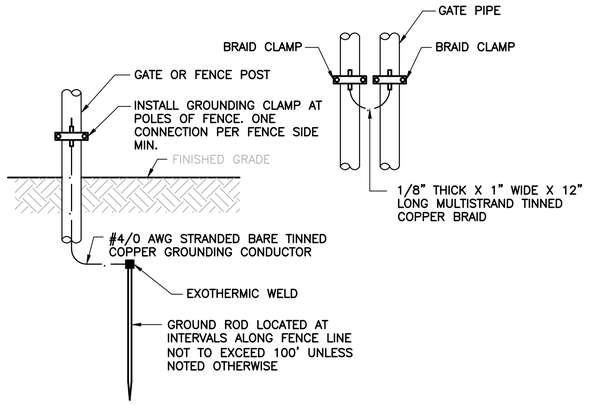

TYPICAL GATE/FENCE POST GROUNDING DETAIL

NOT TO SCALE

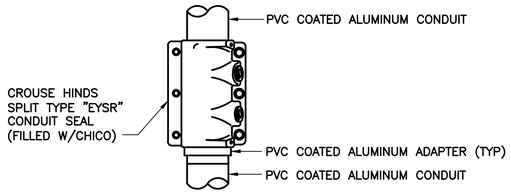

SEAL-OFF FITTING DETAIL

N.T.S.

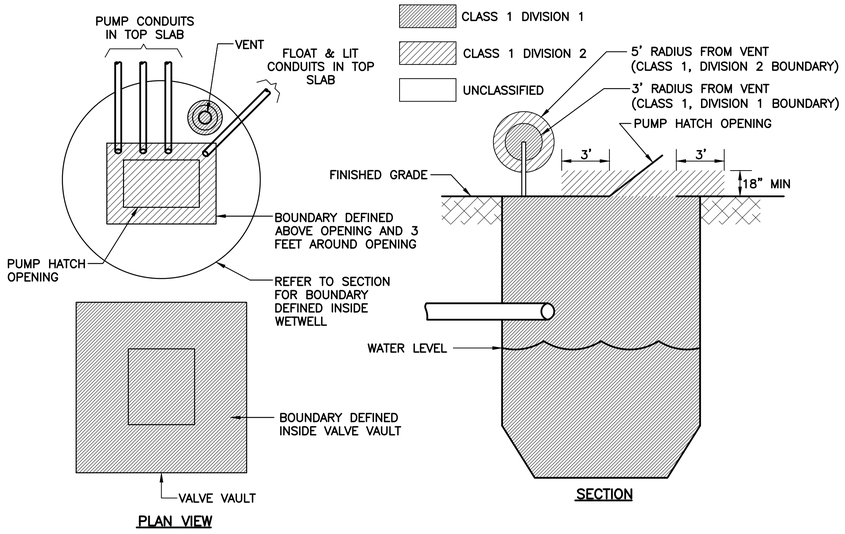

BOUNDARY CLASSIFICATION

N.T.S.

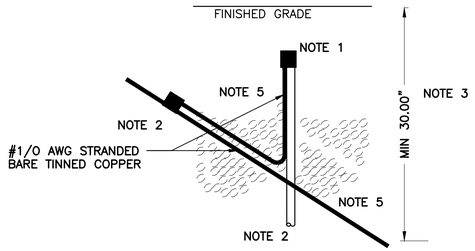

1. GROUND ROD TO COUNTERPOISE CONDUCTOR SHALL BE CONNECTED BY MEANS OF A EXOTHERMIC WELD. GROUND ROD SHALL BE 5/8 INCH IN DIAMETER AND 20 FOOT LENGTH MINIMUM.
2. COUNTERPOISE CONDUCTOR TO CONDUCTOR CONNECTION SHALL BE CONNECTED BY MEANS OF EXOTHERMIC WELD AND THE CONDUCTOR FROM COUNTERPOISE LENGTH TO GROUND ROD SHALL HAVE A MINIMUM OF 36 INCHES.
3. UNDERGROUND INSTALLATION OF COUNTERPOISE SYSTEM SHALL BE BURIED AT A MINIMUM DEPTH OF 30 INCHES.
4. ALL COMPONENTS USED IN INSTALLATION WITHIN SHALL COMPLY WITH SPECIFICATION 16450.
5. #1/0 AWG STRANDED BARE TINNED COPPER CONDUCTOR

COUNTERPOISE GROUND ROD CONNECTION DETAIL

N.T.S.

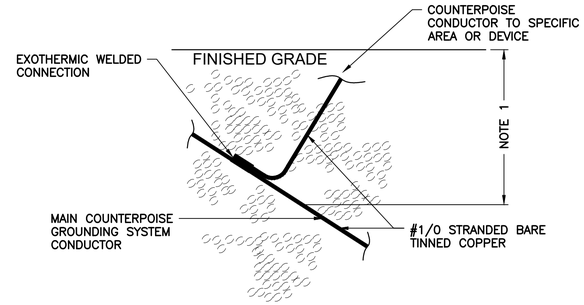

1. UNDERGROUND INSTALLATION OF COUNTERPOISE SYSTEM SHALL BE BURIED AT A MINIMUM DEPTH OF 30 INCHES.
2. ALL COMPONENTS USED IN INSTALLATION WITHIN SHALL COMPLY WITH SPECIFICATION 16450.

COUNTERPOISE CONDUCTOR CONNECTION DETAIL

N.T.S.

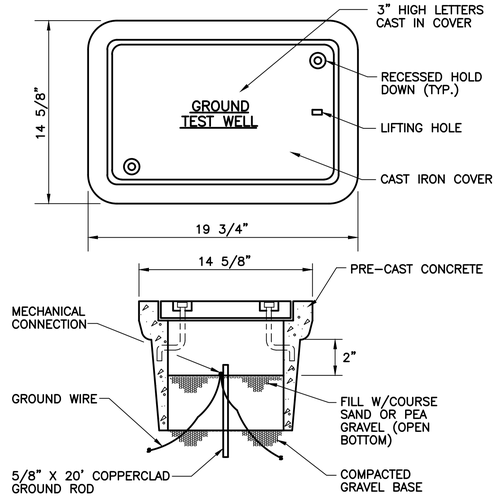

GROUND TEST WELL

N.T.S.

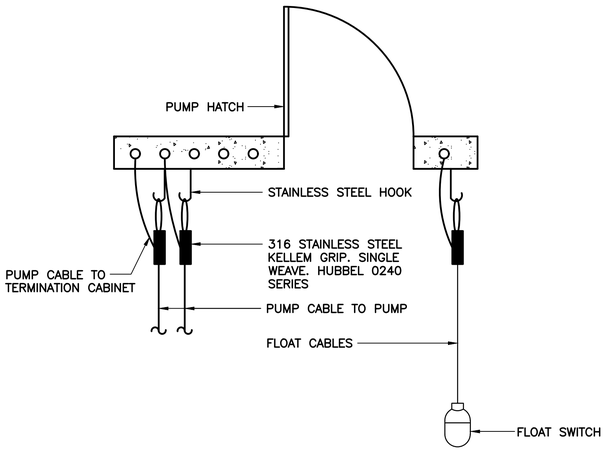

PUMP CABLE MOUNTING DETAIL

N.T.S.

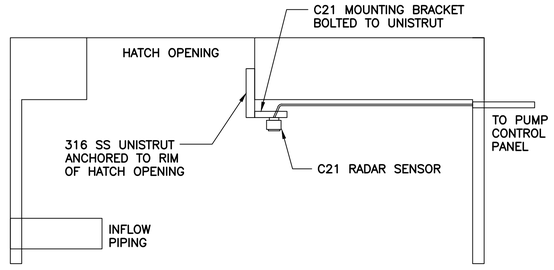

NOTES:

1. THE C21 RADAR SENSOR SHALL BE MOUNTED PER MANUFACTURER'S REQUIREMENTS, IN AN AREA FREE FROM OBSTRUCTION AND AWAY FROM THE INFLOW PIPING

VEGAPULS C21 MOUNTING DETAIL

N.T.S.

100% PLANS - NOT FOR CONSTRUCTION

EDA
Electrical Design Associates
6965 PIAZZA GRANDE AVE., STE. 311
ORLANDO, FLORIDA 32835
PHONE: (407) 745-5604
FAX: (407) 745-5603
C.O.A. No. 8079
MICHAEL J. CAHILL, P.E.
Florida P.E. No. 70837

No.	REVISIONS	DATE	BY

Kimley»Horn
© 2024 KIMLEY-HORN AND ASSOCIATES, INC.
1530 CORNERSTONE BLVD, BUILDING 1, SUITE 200A,
DAYTONA BEACH, FL 32117
PHONE: 407-898-1511
WWW.KIMLEY-HORN.COM CA 00035106

KHA PROJECT	049204106
DATE	08/2024
SCALE	AS SHOWN
DESIGNED BY	MJC
DRAWN BY	SDV
CHECKED BY	WCN

LOWES LIFT STATION MODIFICATIONS

PREPARED FOR
CITY OF PORT ORANGE

LICENSED PROFESSIONAL
MICHAEL J. CAHILL
FL LICENSE NUMBER
70837
DATE:

LIFT STATION

ELECTRICAL DETAILS 1

SHEET NUMBER
E16

This document, together with the concepts and designs presented herein, as an instrument of service, is intended only for the specific purpose and client for which it was prepared. Reuse of and improper reliance on this document without written authorization and adaptation by Kimley-Horn and Associates, Inc. shall be without liability to Kimley-Horn and Associates, Inc.

C:\Users\StephanieVickers\Electrical Design Associates\ACTIVE ORL - Documents\Kimley-Horn\Port Orange - Lowe's LS\02_100Plans\E16.dwg, 8/1/2024 1:38:05 PM, DWG To PDF.pc3

CITY OF PORT ORANGE
PURCHASING DIVISION
1000 CITY CENTER CIRCLE
PORT ORANGE, FLORIDA 32129
TELEPHONE 386-506-5717
purchdiv@port-orange.org

ADDENDUM # 1
December 6, 2024

ITB #25-01 LOWES/GATEWAY LIFT STATION (LS82) REHABILITATION

To All Bidders:
The following changes, clarifications and additions are hereby made part of the bidding and specifications for the above referenced project dated November 8, 2024 and prepared by the City of Port Orange Purchasing Division as fully and completely as if the same were fully set forth therein. It is the sole responsibility of bidder to confirm that all addenda have been received prior to submitting bid and acknowledge such in the bid documents.

The due date for bid submittals is hereby changed to December 20, 2024, at 2:30 PM (EST).

The final addendum will be posted on or about December 13, 2024 and will include all other questions asked prior to the published RFI deadline.

A. REVISIONS:
None

B. CHANGES TO THE ITB:
None

C. CLARIFICATIONS:
None

D. QUESTIONS AND ANSWERS

Question #1: Are there liquidated damages and what is the amount?
ANSWER: There are no liquidated damages on this project.

Question #2: What is the Engineer's Estimate/Budget?
ANSWER: $1,200,000.00

Question #3: What is the Final Completion time?
ANSWER: 365 days from issuance of a Notice to Proceed from the City.

Question #4: Would the City accept the Tnemec/Epoxytec CPP Sprayliner lining system for the City of Port Orange – Lowes/Gateway LS82 rehabilitation project?
ANSWER: All contractors are to bid the basis of design, which is Raven 405. If the selected contractor wishes to use an alternate, then the awarded bidder can make that request after the contract is awarded.

Question #5: Is the diesel bypass pump to be included in our pricing for this project?
ANSWER: The diesel bypass pump in not included the pricing for this project. Contractor is to construct the slab and mechanical piping for a bypass pump.

Question #6: The Specs that I am going by is the one that says Final, as they both came out the same day?
ANSWER: The PDF file named "ITB 25-01 Lowes Gateway Lift Station (LS82) Rehabilitation FINAL" is the bid document. Attachment No.2 Lowes Gateway Lift Station Rehabilitation Technical Specifications and Attachment No.3 Lowes Gateway Lift Station 100% Drawings documents are referred to in the bid document's Section 3 - Scope of Work, page 10. The bid document, Attachment No.2, Attachment No.3 and (Attachment 1) Schedule of Unit Pricing FINAL were published on DemandStar and City of Port Orange websites on November 8, 2024. Any changes to the aforementioned bid document or attachments would be provided in a published addendum.

Question #7: Refer to Sheet #C1. It shows two sewer lines entering the existing wet well, however it doesn't show the up-station manholes. Where are the manholes located?
ANSWER: One of the manholes is located approximately 175 feet to the north across Yorktowne Blvd. The other is located approximately 150 feet to the south in the Lowes parking lot drive isle.

Question #8: What is the sewer flow at each sewer invert?
ANSWER: This information is unknown.

Question #9: Where is the contractor to discharge bypass pumping?
ANSWER: The discharge for construction bypass pumping shall be into the existing force main for the lift station.

Question #10: Please confirm that manhole rehab is not included in this project.
ANSWER: Sanitary Manhole rehabilitation is not included in this project.

Question #11: Refer to Sheet M1, Bypass Pump Section. It shows a Diesel Bypass Pump. However, Sheet #C2 shows a bypass pump pad and says it's for a future bypass pump. Please confirm that this bypass pump is required for this contract.
ANSWER: The bypass pump is not included in this project.

Question #12: It notes that the existing wet well is to be lined with Ravens coating system. What is the required thickness?
ANSWER: Raven 405 Epoxy liner is to be installed per the manufacture's specifications.

Question #13: Are there any existing trees or landscaping to be removed?
ANSWER: It is not anticipated that any trees or existing landscaping will be removed for this project.

In all other respects, except as specifically stated herein, the subject ITB #25-01 LOWES/GATEWAY STATION (LS82) REHABILITATION remains the same.

END OF ADDENDUM #1

Joseph Castro
Buyer
jcastro@port-orange.org

CITY OF PORT ORANGE
PURCHASING DIVISION
1000 CITY CENTER CIRCLE
PORT ORANGE, FLORIDA 32129
TELEPHONE 386-506-5717
purchdiv@port-orange.org

ADDENDUM # 2
December 13, 2024

ITB #25-01 LOWES/GATEWAY LIFT STATION (LS82) REHABILITATION

To All Bidders:
The following changes, clarifications and additions are hereby made part of the bidding and specifications for the above referenced project dated November 8, 2024 and prepared by the City of Port Orange Purchasing Division as fully and completely as if the same were fully set forth therein. It is the sole responsibility of bidder to confirm that all addenda have been received prior to submitting bid and acknowledge such in the bid documents.

A. REVISIONS:

The existing sheets E1 – E5, E14 and E15 are hereby replaced and is posted as a separate document on DemandStar and the City of Port Orange Purchasing Web page @ https://www.port-orange.org/bids.aspx.

B. CHANGES TO THE ITB:

None

C. CLARIFICATIONS:

None

D. QUESTIONS AND ANSWERS

Question #1: In reference to ITB pages 105-106 6.03 Contractor's Insurance it states insurance shall remain in effect for 10 years after Substantial Completion. Would the city consider 2 years of insurance coverage after Substantial Completion?
ANSWER: No. The insurance requirement will remain as 10 years after substantial completion.

Question #2,#3,#4: Refer to Sheet #M1, lift station profile. It notes that, "min 18 LF of lined SDR 28 PVC Gravity Sanitary Sewer (refer to standard detail S-10). It appears that detail S-10 is not part of the bid documents. Can you please provide this detail? Also, only one invert is shown does this note apply to the other sewer line? In addition, is the 18' pipe liner to be installed from the wet well towards the manhole?
ANSWERS: Sheets M-1 and D-3 are hereby replaced with M-1 LIFT STATION MECHANICAL PLAN and D-3 DETAILS and are posted as separate documents on DemandStar and the City of Port Orange Purchasing Web page @ https://www.port-orange.org/bids.aspx.. Detail S-10 has been added on sheet D-3 and gravity piping from the north manhole has been added to sheet M-1 for reference. The existing gravity piping should be already lined and lining the piping is not part of this project scope. The intent is to secure the joint following detail S-10 for the proposed Raven 405 wet well liner.

In all other respects, except as specifically stated herein, the subject ITB #25-01 LOWES/GATEWAY STATION (LS82) REHABILITATION remains the same.

END OF ADDENDUM #2

Joseph Castro
Buyer
jcastro@port-orange.org

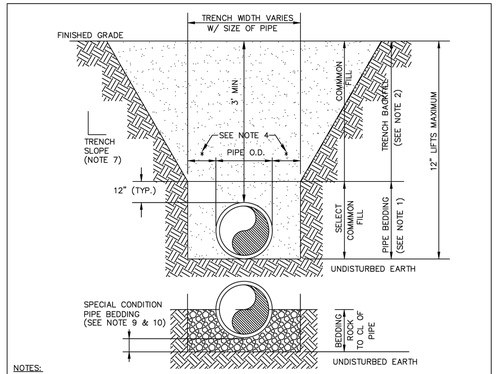

NOTES:

1. PIPE BEDDING: SELECT COMMON FILL COMPACTED TO 95% OF THE MAXIMUM DENSITY AS PER AASHTO T-180.
2. TRENCH BACKFILL: COMMON FILL COMPACTED TO 95% OF THE MAXIMUM DENSITY AS PER AASHTO T-180. 98% DENSITY REQUIRED UNDER DRIVEWAYS, PAVEMENT AND STRUCTURES.
3. PIPE BEDDING UTILIZING SELECT COMMON FILL OR BEDDING ROCK IN ACCORDANCE WITH TYPE "A" BEDDING AND TRENCHING DETAIL MAY BE REQUIRED AS DIRECTED BY THE CITY.
4. (*) 15" MAX. FOR PIPE DIAMETER LESS THAN 24", AND 24" MAX. FOR PIPE DIAMETER 24" AND LARGER.
5. WATER SHALL NOT BE PERMITTED IN THE TRENCH DURING CONSTRUCTION.
6. ALL PIPE TO BE INSTALLED WITH BELL FACING UPSTREAM TO THE DIRECTION OF FLOW.
7. REFER TO OSHA REQUIREMENTS FOR SLOPING, SHEETING AND BRACING IN EXCAVATIONS.
8. FINAL RESTORATION IN IMPROVED AREAS SHALL BE IN COMPLIANCE WITH ALL APPLICABLE REGULATIONS OF GOVERNING AGENCIES. SURFACE RESTORATION WITHIN RIGHT-OF-WAY SHALL COMPLY WITH REQUIREMENTS OF RIGHT-OF-WAY UTILIZATION REGULATIONS AND ROAD CONSTRUCTION SPECIFICATIONS.
9. GRAVITY SEWERS SHALL UTILIZE BEDDING ROCK WHERE UNSUITABLE MATERIAL EXISTS. BEDDING DEPTH SHALL BE 4" MINIMUM FOR PIPE DIAMETER LESS THAN 15", AND 6" MINIMUM FOR PIPE DIAMETER 16" AND LARGER.
10. DEPTH FOR REMOVAL OF UNSUITABLE MATERIAL SHALL GOVERN DEPTH OF BEDDING ROCK BELOW THE PIPE. CITY SHALL DETERMINE IN THE FIELD REQUIRED REMOVAL OF UNSUITABLE MATERIAL TO REACH SUITABLE FOUNDATION.

STANDARD CONSTRUCTION DETAIL
PIPE BEDDING AND TRENCH

REV. 12/18

FILE NAME: M27.DWG

DETAIL REF: M-27

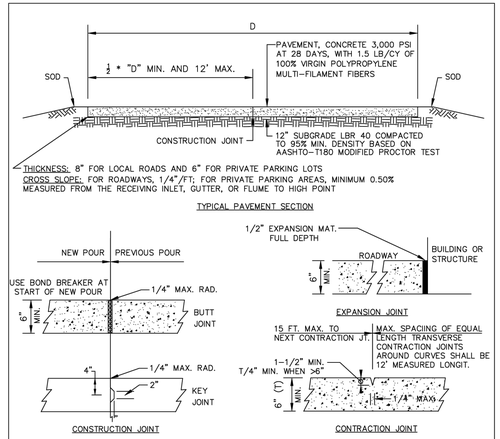

THICKNESS: 8" FOR LOCAL ROADS AND 6" FOR PRIVATE PARKING LOTS
CROSS SLOPE: FOR ROADWAYS, 1/4"/FT; FOR PRIVATE PARKING AREAS, MINIMUM 0.50% MEASURED FROM THE RECEIVING INLET, GUTTER, OR FLUME TO HIGH POINT

TYPICAL PAVEMENT SECTION

NOTES:

1. CONTRACTION JOINTS MAY BE HAND FORMED, SAWED OR CONSTRUCTED WITH A 1/4" PRE-MOLDED FILLER JOINT. JOINTS MUST BE SAWED BETWEEN 4 AND 18 HOURS AFTER CONCRETE HAS BEEN PLACED.
2. EXPANSION JOINTS TO BE PLACED BETWEEN STRUCTURE AND CURB AND AT ANY PERMANENT STRUCTURE ABUTTING OR WITHIN THE PAVED AREA, INCLUDING SIDEWALKS. USE OF WOOD IS NOT ACCEPTABLE.
3. FINAL DETERMINATION OF CONSTRUCTION JOINT SELECTION AND APPLICATION SHALL BE MADE BY THE ENGINEER OF RECORD BASED ON PROJECT REQUIREMENTS AND LOCATION.
4. CONSTRUCTION JOINTS WITHIN THE SLAB AREA SHOULD NOT CONTAIN PRE-MOLDED EXPANSION JOINT FILLER.
5. CONCRETE PAVEMENT CONSTRUCTION SHALL BE IN ACCORDANCE WITH ACI PUBLICATION 330R-87.

STANDARD CONSTRUCTION DETAIL
CONCRETE PAVEMENT DETAILS

REV. 12/18

FILE NAME: R14.DWG

DETAIL REF: R-14

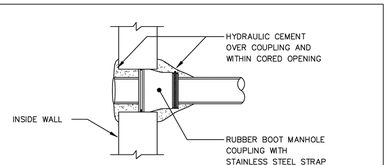

RUBBER BOOT CONNECTION

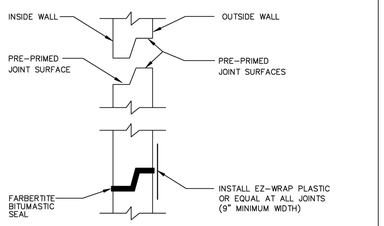

PRECAST JOINT CONNECTION

NOTE:

1. NEW SANITARY SEWER MANHOLE CONNECTIONS SHALL UTILIZE IN-FIELD INSTALLATION OF RUBBER BOOT AND STRAP AND COVER WITH HYDRAULIC CEMENT.
2. EXISTING SANITARY SEWER MANHOLE CONNECTIONS SHALL UTILIZE A CORING METHOD AND IN-FIELD INSTALLATION OF RUBBER BOOT AND STRAP AND COVER WITH HYDRAULIC CEMENT.

STANDARD CONSTRUCTION DETAIL
RUBBER BOOT AND PRECAST JOINT CONNECTION

REV. 12/18

FILE NAME: S10.DWG

DETAIL REF: S-10

This document, together with the concepts and designs presented herein, as an instrument of service, is intended only for the specific purpose and client for which it was prepared. Reuse of and improper reliance on this document without written authorization and adaptation by Kimley-Horn and Associates, Inc. shall be without liability to Kimley-Horn and Associates, Inc.

No.	REVISIONS	DATE	BY
1	ADDENDUM 1	12/9/2024	BDB

Kimley»Horn
© 2024 KIMLEY-HORN AND ASSOCIATES, INC.
1530 CORNERSTONE BLVD, BUILDING 1, SUITE 200A,
DAYTONA BEACH, FL 32117
PHONE: 407-898-1511
WWW.KIMLEY-HORN.COM CA 00035160

KHA PROJECT 049204106

DATE 07/08/2024

SCALE AS SHOWN

DESIGNED BY CAB

DRAWN BY BDB

CHECKED BY NEM

LOWES LIFT STATION MODIFICATIONS

PREPARED FOR
CITY OF PORT ORANGE

LICENSED PROFESSIONAL

NICOLE E. MCCONNELL

FL LICENSE NUMBER
73789

DATE:

DETAILS

SHEET NUMBER
D3

PLAN SYMBOLS

Symbol	Description
	HOME RUN TO PANELBOARD. NO. OF ARROWS INDICATE NO. OF CIRCUITS, HASH MARKS INDICATE NO. OF #12 AWG. CONDUCTORS. NO HASH MARKS INDICATE 2 #12 CONDUCTORS.
	CONDUIT CONCEALED IN WALL, IN SLAB ABOVE, OR ABOVE CEILING
	CONDUIT CONCEALED IN OR BELOW FLOOR OR UNDERGROUND.
	CONDUIT RUN EXPOSED. RUN PARALLEL OR PERPENDICULAR TO STRUCTURE OR WALL.
	FLEXIBLE CONDUIT WITH EQUIPMENT CONNECTION.
	CONCRETE ENCASED DUCTBANK.
	EXTERIOR LED LUMINAIRE AND MOUNTING STANDARD.
J	JUNCTION BOX N.E.C. SURFACE MOUNTED UNLESS INDICATED OTHERWISE.
J	JUNCTION BOX PER N.E.C., FLUSH MOUNTED UNLESS INDICATED OTHERWISE.
	FLUSH OR SURFACE MOUNTED LIGHTING PANELBOARD.
	FLUSH OR SURFACE MOUNTED POWER PANELBOARD.
30	DRY TYPE TRANSFORMER. NO. INDICATES KVA RATING.
	LIQUID FILLED TYPE TRANSFORMER
	20A, 125V, 3W DUPLEX RECEPTACLE IN FLUSH OUTLET BOX, 18" ABOVE FINISHED FLOOR.
	20A, 125V, 3W DUPLEX GFI RECEPTACLE IN FLUSH OUTLET BOX MOUNTED 18" ABOVE FINISHED FLOOR
	20A, 125V, 3W DUPLEX RECEPTACLE, SURFACE MOUNTED.
WP	SURFACE MOUNTED GROUND FAULT DUPLEX WEATHERPROOF RECEPTACLE WITH COVER RATED NEMA 4 WHILE IN USE 20A, 125V, 3W – MOUNTED 18" ABOVE FINISHED FLOOR.
WP	FLUSH MOUNTED GROUND FAULT DUPLEX WEATHERPROOF RECEPTACLE WITH WP COVER RATED NEMA 4 WHILE IN USE MOUNTED 18" ABOVE FINISHED FLOOR
S	SINGLE POLE SWITCH WITH PILOT LIGHT IN FLUSH OUTLET BOX, 48" ABOVE FINISHED FLOOR, UNLESS OTHERWISE NOTED (TYPICAL).
S	SINGLE POLE SWITCH, WITH PILOT LIGHT SURFACE MOUNTED.
S_3	THREE–WAY SWITCH IN FLUSH OUTLET BOX.
	NON–FUSIBLE DISCONNECT SWITCH, 30A,3P UNLESS OTHERWISE INDICATED.
	NON–FUSIBLE DISCONNECT SWITCH, 30A,3P UNLESS OTHERWISE INDICATED, WITH REMOTE CONTROL STATION AS REQUIRED BY ELEMENTARY DIAGRAMS OR SPECS.
75	ELECTRIC A.C. MOTOR, NO. INDICATES HORSEPOWER.
P	POWER PULLBOX, SEE DETAIL
C	CONTROL PULLBOX. SEE DETAIL
VFD	VARIABLE FREQUENCY DRIVE
T	THERMOSTAT
	ELECTRIC HEATER
TW	GROUND TEST WELL
	GROUND ROD
O/R	OFF/REMOTE
FS	FLOW SWITCH
LE	LEVEL ELEMENT
LIT	LEVEL INDICATING TRANSMITTER
TS	TEMPERATURE SWITCH
SF	SEAL FAIL
TE	TEMPERATURE ELEMENT
PS	PRESSURE SWITCH
FE	FLOW ELEMENT
FIT	FLOW INDICATING TRANSMITTER
TC	TERMINATION CABINET WITH COPPER LUGS IN NEMA 4X 316 SS ENCLOSURE
SH	SPACE HEATER
LLS	LIQUID LEVEL SWITCH

SINGLE LINE DIAGRAM SYMBOLS

Symbol	Description
	COMBINATION MOTOR STARTER
ST	SHUNT TRIP
	FUSE
	CAPACITOR
	MOLDED CASE CIRCUIT BREAKER
	TYPICAL SELECTOR SWITCH AND CONTROL. SEE ELEMENTARY DIAGRAMS FOR EXACT TYPE.
75	ELECTRIC A.C. MOTOR, NO. INDICATES HORSEPOWER.
	SERVICE OR EQUIPMENT GROUND.
	NON–FUSIBLE DISCONNECT SWITCH, 30A,3P UNLESS OTHERWISE INDICATED.
	NON–FUSIBLE DISCONNECT SWITCH, 30A,3P UNLESS OTHERWISE INDICATED, WITH REMOTE CONTROL STATION AS REQUIRED BY ELEMENTARY DIAGRAMS OR SPECS.
	120/208V PANELBOARD
	480V PANELBOARD.
	CURRENT TRANSFORMERS
	POTENTIAL TRANSFORMERS.
SH	SPACE HEATER
TS	TEMPERATURE
	CROUSE HINDS EYSR FITTING. FILLED WITH CHICO CEMENT
	CROUSE HINDS EYS FITTING. FILLED WITH CHICO CEMENT
K	KIRK KEY INTERLOCK
FS	FLOW SWITCH
TC	NEMA 4X 316SS TERMINATION CABINET

CONTROL DIAGRAM SYMBOLS

Symbol	Description
	NORMALLY OPEN CONTACT
	NORMALLY CLOSED CONTACT
	LIMIT SWITCH, NORMALLY OPEN
	LIMIT SWITCH, NORMALLY CLOSED
	PRESSURE SWITCH, NORMALLY OPEN
	PRESSURE SWITCH, NORMALLY CLOSED
	FLOAT SWITCH, NORMALLY OPEN
	FLOAT SWITCH, NORMALLY CLOSED
	FLOW SWITCH, NORMALLY OPEN
	FLOW SWITCH, NORMALLY CLOSED
	TEMPERATURE SWITCH, NORMALLY OPEN
	TEMPERATURE SWITCH, NORMALLY CLOSED
	NORMALLY OPEN, TIMED TO CLOSE CONTACT
	NORMALLY CLOSED, TIMED TO OPEN CONTACT
	NORMALLY CLOSED, TIMED TO CLOSE CONTACT
	NORMALLY OPEN, TIMED TO OPEN CONTACT
AR	ALARM RELAY
AT	ALARM TIMER
CR	CONTROL RELAY
M	MOTOR STARTER
MC	MOTOR CALL
TR	TIMING RELAY
A	ALARM INDICATING LIGHT
R	RUN INDICATING LIGHT
	MOMENTARY CONTACT PUSHBUTTON
	MOMENTARY BREAK PUSHBUTTON OR RESET
K	KEYED SWITCH
	MAINTAINED CONTACT ON–OFF SWITCH
	START/STOP(S/S) CONTROL SWITCH MAINTAINED CONTACT
	THREE POSITION MAINTAINED CONTACT SELECTOR SWITCH
	FUSE
	MOLDED CASE CIRCUIT BREAKER
	CONTROL POWER TRANSFORMER
	REMOTE TERMINAL BLOCK POINT

ABBREVIATIONS

A	AMPERES
AIC	AMPS INTERRUPTING CURRENT
ATS	AUTOMATIC TRANSFER SWITCH
BKR	BREAKER
BLDG	BUILDING
CPCP	CHEMICAL FEED CONTROL PANEL
CPT	CONTROL POWER TRANSFORMER
CU	COPPER
CT	CURRENT TRANSFORMER
DH	DATA HIGHWAY
DISC	DISCONNECT
DSB	DISTRIBUTION SWITCHBOARD
EAP	EYEWASH ALARM PANEL
ELEC	ELECTRICAL
ENCL	ENCLOSURE
EF	EXHAUST FAN
EQ	EQUALIZATION
ETM	ELAPSED TIME METER
EXH	EXHAUST
EXIST	EXISTING
FBC	FLORIDA BUILDING CODE
FPL	FLORIDA POWER & LIGHT
FPP	FIBER PATCH PANEL
FVNR	FULL VOLTAGE NON–REVERSING
GCP	GENERATOR CONTROL PANEL
GEN	GENERATOR
GFR	GROUND FAULT RECEPTACLE
GFI	GROUND FAULT INTERRUPTER
GND	GROUND
GRS	GALVANIZED RIGID STEEL
GST	GROUND STORAGE TANK
HMI	HUMAN MACHINE INTERFACE
HP	HORSEPOWER
KVA	KILO VOLT–AMPERES
KW	KILOWATT
LP	LOOP
LSCP	LIFT STATION CONTROL PANEL
LTG	LIGHTING
MAX	MAXIMUM
MCB	MAIN CIRCUIT BREAKER
MCC	MOTOR CONTROL CENTER
MIN	MINIMUM
MLO	MAIN LUGS ONLY
MPZ	MINI POWER ZONE
MTD	MOUNTED
MTS	MANUAL TRANSFER SWITCH
NEC	NATIONAL ELECTRICAL CODE
N	NEUTRAL
NIP	NETWORK INTERFACE PANEL
NSR	NETWORK SERVER RACK
NTS	NOT TO SCALE
OH	OVERHEAD
P	POLE
PCP	PROCESS CONTROL PANEL
PM	PHASE MONITOR
PVC	POLYVINYL CHLORIDE
RECPT	RECEPTACLE
RCP	REMOTE I/O CONTROL PANEL
RIO	REMOTE I/O
RPVP	RAS PUMP VFD PANEL
RTO	RETURNED TO OWNER
SH	SHIELDED
SLD	SINGLE LINE DIAGRAM
SPD	SURGE PROTECTION DEVICE
SS	STAINLESS STEEL
SSS	SOLID STATE STARTER
STR	STARTER
TC	TERMINATION CABINET
TYP	TYPICAL
TBR	TO BE REMOVED
UPS	UNINTERRUPTIBLE POWER SUPPLY
V	VOLT
VFD	VARIABLE FREQUENCY DRIVE
W	WATT
w/	WITH
WP	WEATHERPROOF
WTP	WATER TREATMENT PLANT
WWTP	WASTEWATER TREATMENT PLANT
XFMR	TRANSFORMER
ø	PHASE

NOTES

1. ALL WORK SHALL BE DONE IN ACCORDANCE WITH THE 2023 8TH EDITION FLORIDA BUILDING CODE SCC CHAPTER 40, APPENDIX A, 106.3.5, THE 2020 NATIONAL ELECTRICAL CODE, (REF: SCCC CHAPTER 40, APPENDIX A, 106.3.5) NFPA 1, NFPA 70 AND NFPA 101 2020 AND SHALL COMPLY WITH ALL LOCAL RULES. 1
2. THE PLANS REFLECT SYSTEM VOLTAGE DROPS AS PER F.B.C. ENERGY CONSERVATION 2023 C405.6.3 FEEDER CONDUCTORS ARE SIZED FOR A MAXIMUM VOLTAGE DROP OF 2 PERCENT AT DESIGN LOAD. BRANCH CIRCUIT CONDUCTORS ARE SIZED FOR A MAXIMUM VOLTAGE DROP OF 3 PERCENT AT DESIGN LOAD.
3. ELECTRICAL CONTRACTOR SHALL SUPPLY AND INSTALL ALL NEW ELECTRICAL WORK INDICATED.
4. ELECTRICAL CONTRACTOR SHALL VISIT JOB SITE AND FAMILIARIZE HIMSELF WITH ALL CONDITIONS AFFECTING ELECTRICAL INSTALLATION AND MAKE PROVISIONS AS TO THE COST THEREOF. EXISTING CONDITIONS OF ELECTRICAL EQUIPMENT, LIGHT FIXTURES, ETC... THAT ARE PART OF THE FINAL SYSTEM SHALL BE VERIFIED BY THE CONTRACTOR PRIOR TO SUBMITTING HIS BID.
5. MINIMUM WIRE SIZE SHALL BE #12 A.W.G. EXCLUDING CONTROL WIRING, UNLESS OTHERWISE NOTED.
6. IT IS NOT THE INTENT OF THESE PLANS TO SHOW EVERY MINOR DETAIL OF CONSTRUCTION. THE CONTRACTOR IS EXPECTED TO FURNISH AND INSTALL ALL ITEMS FOR A COMPLETE ELECTRICAL SYSTEM AND PROVIDE ALL REQUIREMENTS NECESSARY FOR THE EQUIPMENT TO BE PLACED IN PROPER WORKING ORDER.
7. ELECTRICAL SYSTEM SHALL BE COMPLETE AND EFFECTIVELY GROUNDED AS REQUIRED BY THE N.E.C. 2020 EDITION OR LOCAL CODES. ALL CONDUITS SHALL HAVE A BOND WIRE SIZED PER TABLE 250–122 OF THE 2020 NATIONAL ELECTRICAL CODE.
8. ALL MATERIALS SHALL BE NEW AND BEAR UNDERWRITERS' LABELS WHERE APPLICABLE.
9. ALL WORK SHALL BE PERFORMED BY A LICENSED ELECTRICAL CONTRACTOR IN A FIRST CLASS WORKMANLIKE MANNER. THE COMPLETED SYSTEM SHALL BE FULLY OPERATIVE AND ACCEPTED BY ENGINEER/OWNER.
10. CONTRACTOR SHALL GUARANTEE ALL MATERIALS AND WORKMANSHIP FREE FROM DEFECTS FOR A PERIOD OF NOT LESS THAN TWO YEARS FROM DATE OF ACCEPTANCE.
11. CORRECTION OF ANY DEFECTS SHALL BE COMPLETED WITHOUT ADDITIONAL CHARGE AND SHALL INCLUDE REPLACEMENT OR REPAIR OF ANY OTHER PHASE OF THE INSTALLATION WHICH MAY HAVE BEEN DAMAGED.
12. CONTRACTOR SHALL BE RESPONSIBLE FOR ALL CUTTING AND PATCHING REQUIRED OF HIS WORK.
13. ELECTRICAL CONTRACTOR SHALL LABEL ALL PANELS W/ TYPED WRITTEN DIRECTORIES (NEW & EXISTING).
14. ALL ELECTRICAL WIRING SHALL BE THE RESPONSIBILITY OF THE ELECTRICAL CONTRACTOR.
15. DO NOT SCALE THE ELECTRICAL DRAWINGS. REFER TO THE MECHANICAL DRAWINGS & THE APPROVED MANUFACTURER'S SHOP DRAWINGS FOR THE EXACT LOCATION OF ALL EQUIPMENT.
16. NON–SHADED TEXT DENOTES NEW EQUIPMENT, STRUCTURES AND WORK. *SHADED AND SLANTED* TEXT DENOTES EXISTING EQUIPMENT OR STRUCTURES.
17. ALL CONTROL PANELS SHALL BE UL LISTED AND SHALL COMPLY WITH ARTICLE 409 OF THE NEC.
18. ALL EMPTY CONDUITS SHALL BE INSTALLED WITH PULLSTRING.
19. PER THE FBC–ENERGY CONSERVATION, WITHIN 30 DAYS AFTER THE DATE OF ACCEPTANCE, RECORD DRAWINGS OF THE ACTUAL INSTALLATION SHALL BE PROVIDED TO THE BUILDING OWNER, INCLUDING THE FOLLOWING:
   a. SINGLE LINE DIAGRAM OF THE BUILDING ELECTRICAL DISTRIBUTION SYSTEM.
   b. FLOOR PLANS INDICATING LOCATION AND AREA SERVED FOR ALL DISTRIBUTION (REF: FBC–ECC405.5.4.1–8TH EDITION). 1
20. PER THE FBC–ENERGY CONSERVATION, WITHIN 30 DAYS AFTER THE DATE OF ACCEPTANCE, AN OPERATING MANUAL MAINTENANCE MANUAL BE PROVIDED TO THE BUILDING OWNER. THE MANUALS SHALL INCLUDE, AT A MINIMUM, THE FOLLOWING:
   a. SUBMITTAL DATA STATING EQUIPMENT RATING AND SELECTED OPTIONS FOR EACH PIECE OF EQUIPMENT REQUIRING MAINTENANCE.
   b. OPERATION MANUALS AND MAINTENANCE FOR EACH PIECE OF EQUIPMENT REQUIRING MAINTENANCE. REQUIRED ROUTINE MAINTENANCE ACTIONS SHALL BE CLEARLY IDENTIFIED.
   c. NAMES AND ADDRESSES OF AT LEAST ONE QUALIFIED SERVICE AGENCY. (REF:FBC–EC 405.5.4.2 – 8TH EDITION). 1

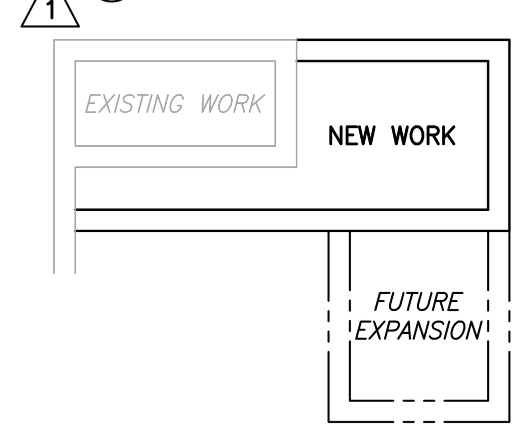

EXISTING OR FUTURE CONDITION DESIGNATION

Electrical Design Associates
6965 PIAZZA GRANDE AVE., STE. 311
ORLANDO, FLORIDA 32835
PHONE: (407) 745–5604
FAX: (407) 745–5603
C.O.A. No. 8079
MICHAEL J. CAHILL, P.E.
Florida P.E. No. 70837

No.	REVISIONS	DATE	BY
1	ADDENDUM 1	12/09/2024	EDA

Kimley»Horn
© 2024 KIMLEY-HORN AND ASSOCIATES, INC.
1530 CORNERSTONE BLVD, BUILDING 1, SUITE 200A,
DAYTONA BEACH, FL 32117
PHONE: 407-898-1511
WWW.KIMLEY-HORN.COM CA 00035106

KHA PROJECT	049204106
DATE	12/2024
SCALE	AS SHOWN
DESIGNED BY	MJC
DRAWN BY	SDV
CHECKED BY	WCN

LOWES LIFT STATION MODIFICATIONS

PREPARED FOR
CITY OF PORT ORANGE

LICENSED PROFESSIONAL
MICHAEL J. CAHILL
FL LICENSE NUMBER
70837
DATE:

LIFT STATION
ELECTRICAL NOTES, SYMBOLS & ABBREVIATIONS

SHEET NUMBER
E1

This document, together with the concepts and designs presented herein, as an instrument of service, is intended only for the specific purpose and client for which it was prepared. Reuse of and improper reliance on this document without written authorization and adaptation by Kimley-Horn and Associates, Inc. shall be without liability to Kimley-Horn and Associates, Inc.
C:\Users\sreyes\Electrical Design Associates\ACTIVE-ORL - Documents\Kimley-Horn\Port Orange - Lowes LS\04_Add_1\dwg\E01.dwg, 12/12/2024 1:12:30 PM

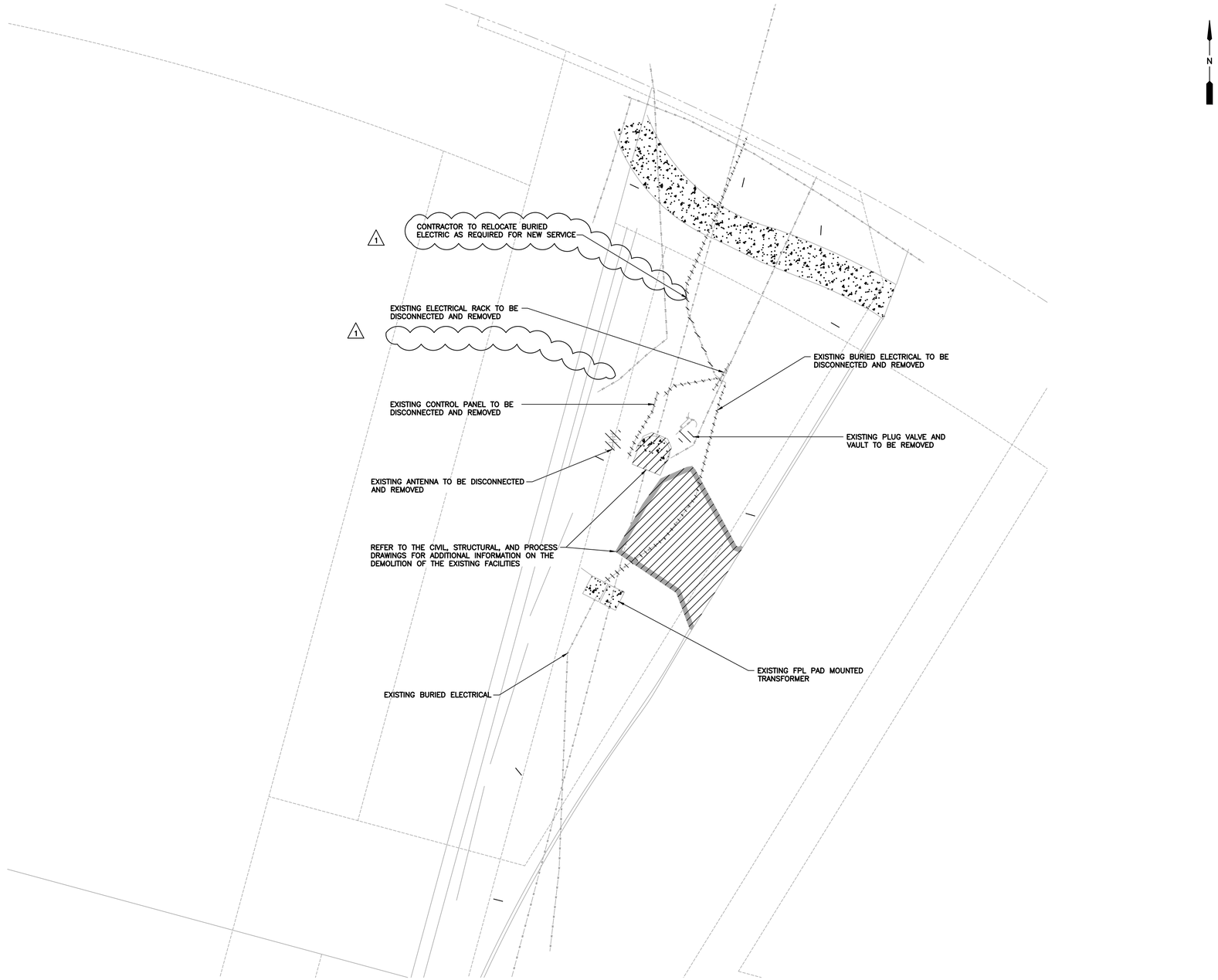

DEMOLITION SITE PLAN

SCALE: 1"=10'-0"

10 5 0 10'

EDA
Electrical Design Associates
6965 PIAZZA GRANDE AVE., STE. 311
ORLANDO, FLORIDA 32835
PHONE: (407) 745-5604
FAX: (407) 745-5603
C.O.A. No. 8079
MICHAEL J. CAHILL, P.E.
Florida P.E. No. 70837

No.	REVISIONS	DATE	BY
1	ADDENDUM 1	12/09/2024	EDA

Kimley»Horn

© 2024 KIMLEY-HORN AND ASSOCIATES, INC.

1530 CORNERSTONE BLVD, BUILDING 1, SUITE 200A,
DAYTONA BEACH, FL 32117
PHONE: 407-898-1511
WWW.KIMLEY-HORN.COM CA 00035106

KHA PROJECT	049204106
DATE	12/2024
SCALE	AS SHOWN
DESIGNED BY	MJC
DRAWN BY	SDV
CHECKED BY	WCN

CITY OF PORT ORANGE 1867 FLORIDA

LOWES LIFT STATION MODIFICATIONS

PREPARED FOR
CITY OF PORT ORANGE

LICENSED PROFESSIONAL

MICHAEL J. CAHILL

FL LICENSE NUMBER
70837

DATE:

LIFT STATION

ELECTRICAL DEMOLITION SITE PLAN

SHEET NUMBER
E2

This document, together with the concepts and designs presented herein, as an instrument of service, is intended only for the specific purpose and client for which it was prepared. Reuse of and improper reliance on this document without written authorization and adaptation by Kimley-Horn and Associates, Inc. shall be without liability to Kimley-Horn and Associates, Inc.

C:\Users\ureyes\Electrical Design Associates\ACTIVE-ORL - Documents\Kimley-Horn\Port Orange - Lowes LS\04_Add_1\dwg\E02.dwg, 12/12/2024 1:12:47 PM

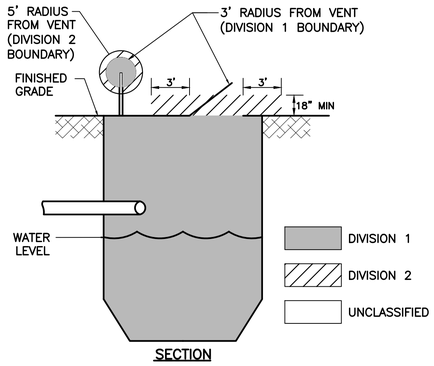

SECTION

NFPA 820 BOUNDARY CLASSIFICATION

N.T.S.

NFPA NOTES:

1. THE AREA INSIDE THE WET WELL IS A HAZARDOUS, CLASS 1, DIV. 1 LOCATION.
2. THE AREA WITHIN 3 FEET FROM THIS HATCH AND 1.5 FEET ABOVE THE WET WELL SLAB IS A HAZARDOUS, CLASS 1, DIV. 2 LOCATION.
3. THE AREA WITHIN A 3 FOOT RADIUS FROM THE VENT OPENING IS A HAZARDOUS, CLASS 1, DIV. 1 LOCATION. THE AREA BEYOND A 3 FOOT RADIUS FROM THE VENT OPENING BUT NOT GREATER THAN A 5 FOOT RADIUS IS A HAZARDOUS CLASS 1, DIV 2. LOCATION.
4. ALL CONDUITS SHALL ENTER THE RTU AND CONTROL PANEL FROM THE BOTTOM UNLESS OTHERWISE SHOWN ON DRAWINGS.
5. PROVIDE WIRING METHODS AND MATERIALS SUITABLE FOR A CLASS 1, DIVISION 1 AREA WITHIN ALL HAZARDOUS AREAS. USE CROUSE-HINDS MODEL EYS CONDUIT SEALING FITTING.
6. FIELD PANEL LOCATIONS ARE TO BE FIELD VERIFIED AND ARE SHOWN FOR CLARITY ONLY.
7. MAIN CIRCUIT BREAKERS AND MOTOR CIRCUIT BREAKERS TO BE SIZED ACCORDING TO MOTOR H.P. AND SYSTEM LOAD.
8. CONDUIT EXTENDING FROM THE WETWELL SHALL BE PVC SCHEDULE 80 AND SHALL BE ENCASED IN A CONCRETE ENVELOPE NO LESS THAN 2 INCHES THICK AND SHALL HAVE A COVER OF NO LESS THAN 24 INCHES. PVC COATED THREADED RIGID ALUMINUM CONDUIT SHALL BE USED FOR THE LAST 24 INCHES OF THE UNDERGROUND RUN TO EMERGENCE. AN EQUIPMENT GROUNDING CONDUCTOR SHALL BE INCLUDED TO PROVIDE ELECTRICAL CONTINUITY. INSTALLATION SHALL BE IN ACCORDANCE WITH N.EC. 70, ARTICLE 501, PART II, 501.10.

SITE PLAN

SCALE: 1"=10'-0"

10 5 0 10'

NOTES:

1. REFER TO SINGLE LINE DIAGRAM FOR CONDUIT, WIRE SIZES, AND ADDITIONAL INFORMATION.

EDA
Electrical Design Associates
6965 PIAZZA GRANDE AVE., STE. 311
ORLANDO, FLORIDA 32835
PHONE: (407) 745-5604
FAX: (407) 745-5603
C.O.A. No. 8079
MICHAEL J. CAHILL, P.E.
Florida P.E. No. 70837

No.	REVISIONS	DATE	BY
1	ADDENDUM 1	12/09/2024	EDA

Kimley»Horn

© 2024 KIMLEY-HORN AND ASSOCIATES, INC.

1530 CORNERSTONE BLVD, BUILDING 1, SUITE 200A,
DAYTONA BEACH, FL 32117
PHONE: 407-898-1511
WWW.KIMLEY-HORN.COM CA 00035106

KHA PROJECT	049204106
DATE	12/2024
SCALE	AS SHOWN
DESIGNED BY	MJC
DRAWN BY	SDV
CHECKED BY	WCN

CITY OF PORT ORANGE 1867 FLORIDA

LOWES LIFT STATION MODIFICATIONS

PREPARED FOR

CITY OF PORT ORANGE

LICENSED PROFESSIONAL

MICHAEL J. CAHILL

FL LICENSE NUMBER

70837

DATE:

LIFT STATION

SITE PLAN

SHEET NUMBER

E3

This document, together with the concepts and designs presented herein, as an instrument of service, is intended only for the specific purpose and client for which it was prepared. Reuse of and improper reliance on this document without written authorization and adaptation by Kimley-Horn and Associates, Inc. shall be without liability to Kimley-Horn and Associates, Inc.

① PROPOSED VOLTAGE	② PROPOSED MOTOR SIZE (HP)	③ GEN RECEPTACLE BREAKER	④ ATS OR MTS	⑤ SERVICE CONDUIT & CONDUCTORS	⑥ LOAD CONDUIT & CONDUCTORS	⑦ EMERGENCY CONDUCTORS	⑧ STARTER SIZE	⑨ MOTOR BREAKER	⑩ FUSED DISC/FUSES (SEE NOTES)	⑪ GROUND	⑫ PUMP CABLE CONDUIT SIZE	⑬ GENERATOR RECEPTACLE	TC1 DISCONNECTS
240V, 3ø, 3W	X < 7.5 HP	100A,3P	100A,3P	4#2–1 1/2"	3#2 & 1#6 GND–1 1/2"	3#2 & 1#6 GND	1	50A,3P	100A,3P/100A	#6	PER N.E.C.	100A	30A,3P

NOTE:
SOLID STATE SOFT STARTERS SHALL BE PROVIDED FOR MOTOR SIZES ABOVE 50 HP.

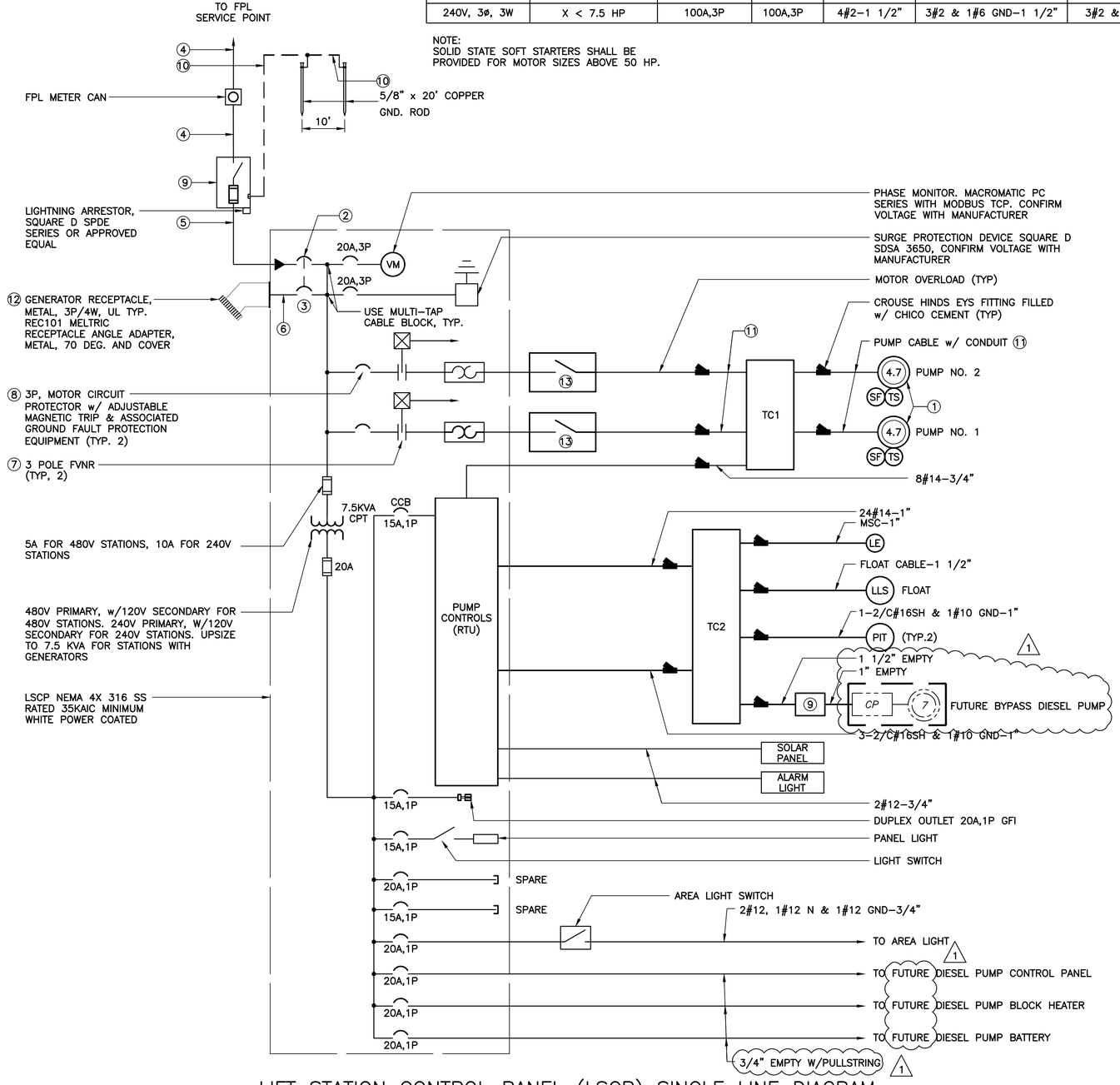

LIFT STATION CONTROL PANEL (LSCP) SINGLE LINE DIAGRAM

NOTES:

A. FUSES SHALL BE BUSSMAN CLASS J CURRENT LIMITING.

B. NEMA 4X 316 SS FUSED SWITCH AND ASSOCIATED REJECTION CLIPS AND 4W NEUTRAL KIT w/ CURRENT LIMITING FUSES. SWITCH SHALL BE EQUIPPED w/ SPLIT BOLTS ON LOAD SIDE FOR INSTALLATION OF LIGHTNING ARRESTOR (SERVICE ENTRANCE RATED).

C. B PHASE (HIGH LEG) SHALL NOT BE USED FOR SINGLE PHASE CIRCUITS ON ALL 120/240V–3φ OPEN DELTA SERVICES.

D. ALL CONTROL PANELS SHALL BE U.L. LABELED AND SHALL COMPLY WITH ARTICLE 409 OF THE N.E.C.

LSCP LOAD TABULATION
240V–3φ–4W

DESCRIPTION	LOAD	AMPACITY
PUMPS	2 @ 4.7 HP	= 24.80 AMPS
TRANSFORMER	1 @ 7.5 KVA	= 18.04 AMPS
	CONNECTED LOAD	= 42.84 AMPS
② SERVICE ENTRANCE =	42.84 AMPS + (0.25)(12.40)	= (45.94) AMPS

NOTES:

① AMPACITIES PER TABLE 430.250 OF THE NATIONAL ELECTRICAL CODE.

② SERVICE ENTRANCE MINIMUM SIZE AS PER ARTICLE 230 OF THE NATIONAL ELECTRIC CODE.

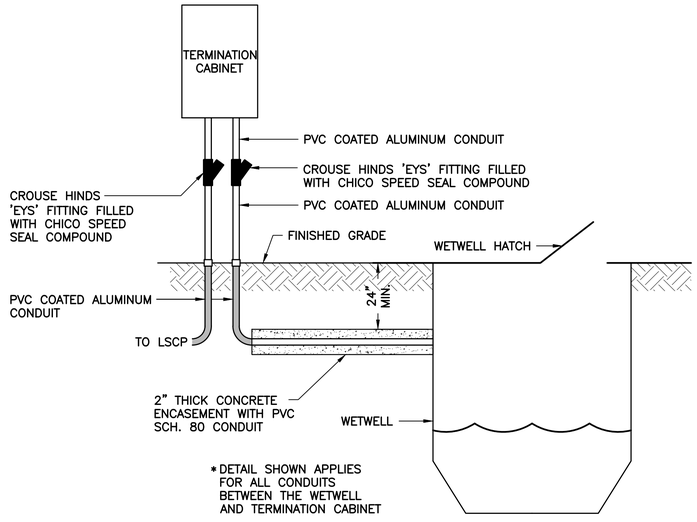

CONDUIT INSTALLATION DETAIL
N.T.S.

EDA
Electrical Design Associates
6965 PIAZZA GRANDE AVE., STE. 311
ORLANDO, FLORIDA 32835
PHONE: (407) 745–5604
FAX: (407) 745–5603
C.O.A. No. 8079
MICHAEL J. CAHILL, P.E.
Florida P.E. No. 70837

This document, together with the concepts and designs presented herein, as an instrument of service, is intended only for the specific purpose and client for which it was prepared. Reuse of and improper reliance on this document without written authorization and adaptation by Kimley-Horn and Associates, Inc. shall be without liability to Kimley-Horn and Associates, Inc.

I:\Documents\Kimley-Horn\Electrical Design Associates\ACTIVE\ORL - Documents\Kimley-Horn\Port Orange - Lowes LS\04_Add.1\dwg\E04.dwg, 12/12/2024 11:13:04 PM

No.	REVISIONS	DATE	BY
1	ADDENDUM 1	12/09/2024	EDA

Kimley»Horn
© 2024 KIMLEY-HORN AND ASSOCIATES, INC.
1530 CORNERSTONE BLVD, BUILDING 1, SUITE 200A,
DAYTONA BEACH, FL 32117
PHONE: 407-898-1511
WWW.KIMLEY-HORN.COM CA 00035106

KHA PROJECT 049204106
DATE 12/2024
SCALE AS SHOWN
DESIGNED BY MJC
DRAWN BY SDV
CHECKED BY WCN

LOWES LIFT STATION MODIFICATIONS

PREPARED FOR
CITY OF PORT ORANGE

LICENSED PROFESSIONAL
MICHAEL J. CAHILL
FL LICENSE NUMBER
70837
DATE:

LIFT STATION
SINGLE LINE DIAGRAM

SHEET NUMBER
E4

This document, together with the concepts and designs presented herein, as an instrument of service, is intended only for the specific purpose and client for which it was prepared. Reuse of and improper reliance on this document without written authorization and adaptation by Kimley-Horn and Associates, Inc. shall be without liability to Kimley-Horn and Associates, Inc.

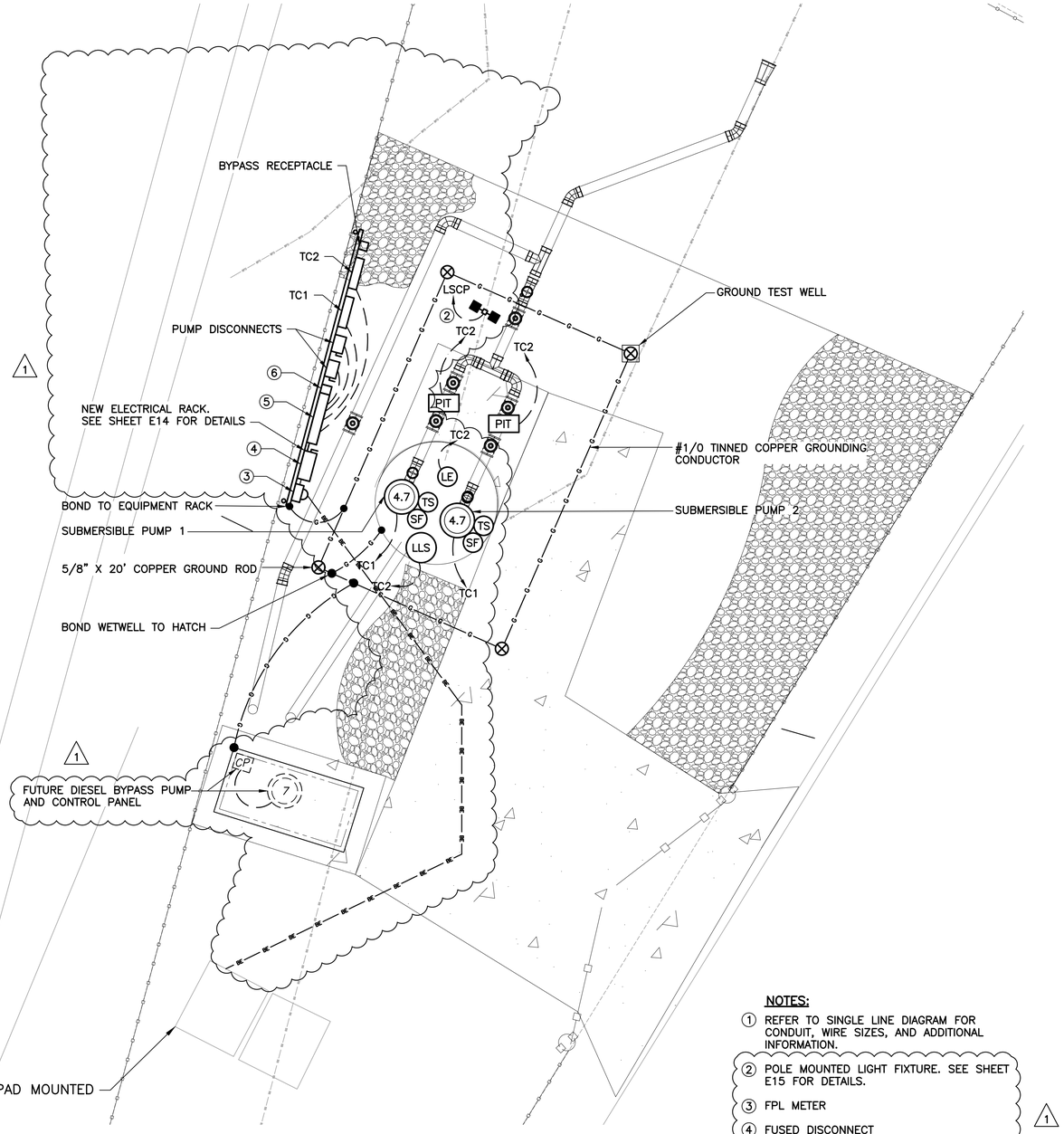

PUMP STATION PLAN VIEW

SCALE: 1/4"=1'-0"

1 0 1 2 3 7'

NOTES:

1. REFER TO SINGLE LINE DIAGRAM FOR CONDUIT, WIRE SIZES, AND ADDITIONAL INFORMATION.
2. POLE MOUNTED LIGHT FIXTURE. SEE SHEET E15 FOR DETAILS.
3. FPL METER
4. FUSED DISCONNECT
5. LSCP
6. GENERATOR RECEPTACLE

EDA
Electrical Design Associates
6965 PIAZZA GRANDE AVE., STE. 311
ORLANDO, FLORIDA 32835
PHONE: (407) 745-5604
FAX: (407) 745-5603
C.O.A. No. 8079
MICHAEL J. CAHILL, P.E.
Florida P.E. No. 70837

No.	REVISIONS	DATE	BY
1	ADDENDUM 1	12/09/2024	EDA

Kimley»Horn
© 2024 KIMLEY-HORN AND ASSOCIATES, INC.
1530 CORNERSTONE BLVD, BUILDING 1, SUITE 200A,
DAYTONA BEACH, FL 32117
PHONE: 407-898-1511
WWW.KIMLEY-HORN.COM CA 00035106

KHA PROJECT	049204106
DATE	12/2024
SCALE	AS SHOWN
DESIGNED BY	MJC
DRAWN BY	SDV
CHECKED BY	WCN

LOWES LIFT STATION MODIFICATIONS

PREPARED FOR
CITY OF PORT ORANGE

LICENSED PROFESSIONAL
MICHAEL J. CAHILL
FL LICENSE NUMBER
70837
DATE:

LIFT STATION

PUMP STATION POWER AND GROUNDING PLAN VIEW

SHEET NUMBER
E5

C:\Users\jmeyer\Electrical Design Associates\ACTIVE-DBL - Documents\Kimley-Horn\Port Orange - Lowes LS\04_Add_1\dwg\E05.dwg 12/12/2024 1:13:12 PM

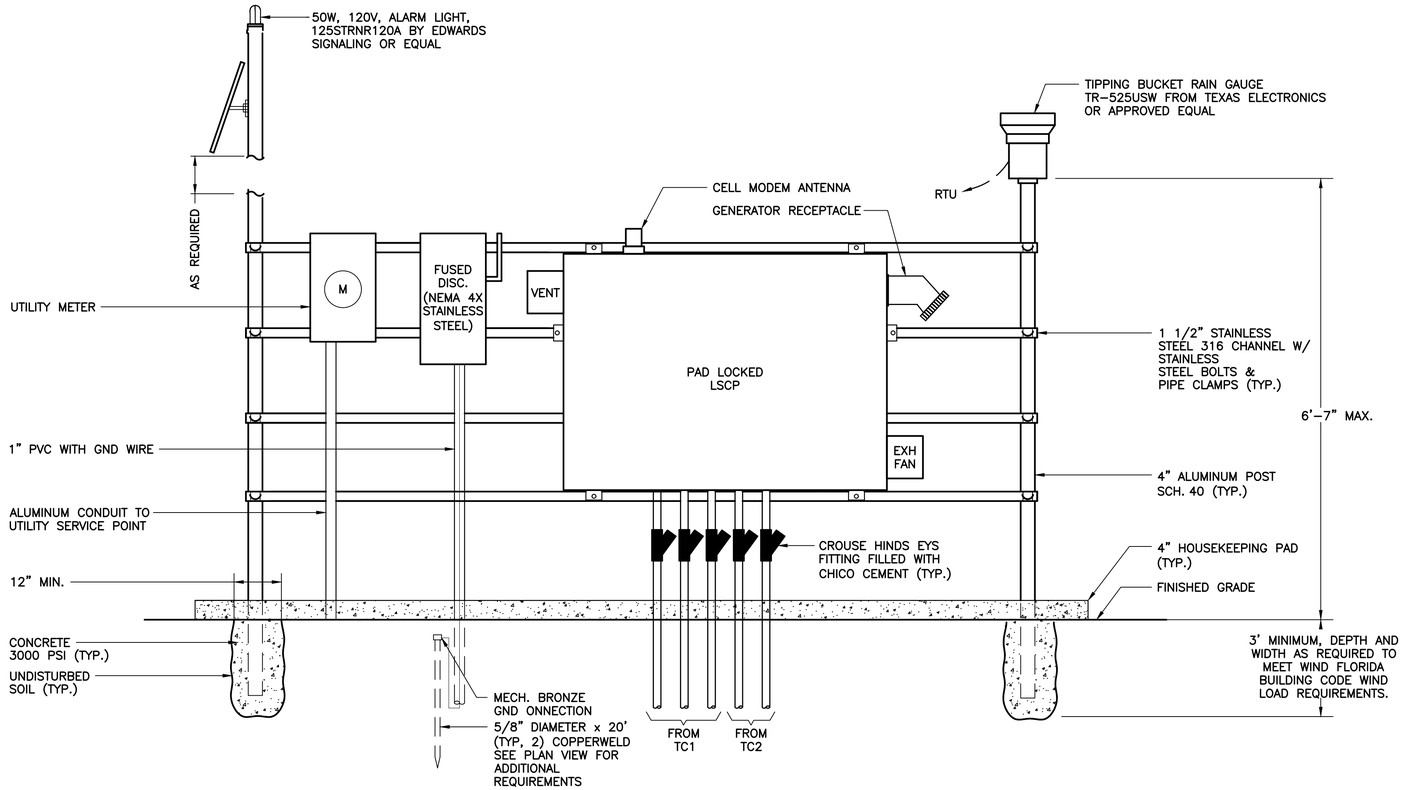

EQUIPMENT RACK DETAILS

N.T.S.

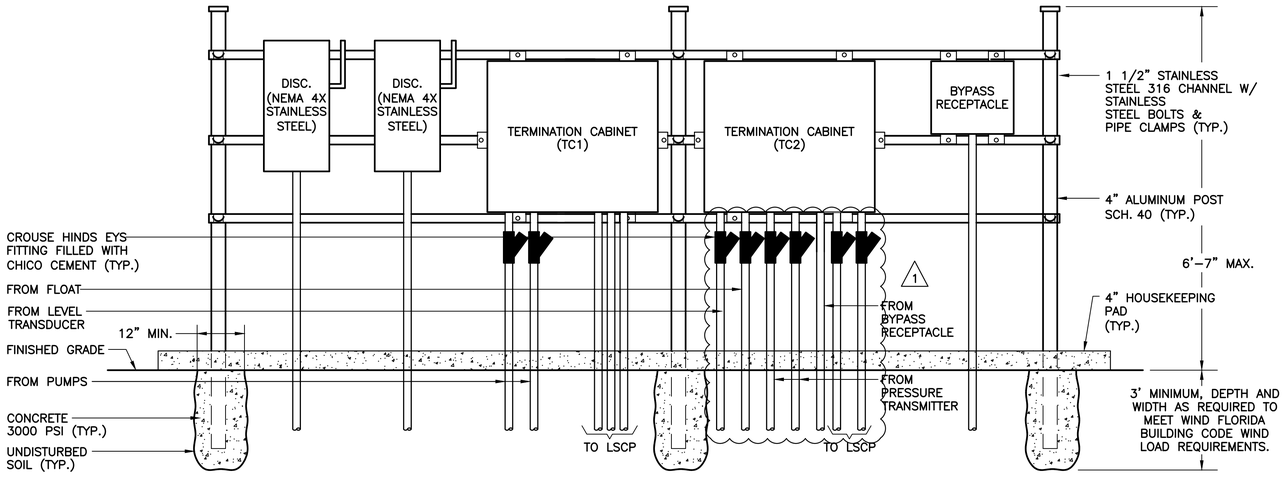

TERMINATION CABINET RACK DETAILS

N.T.S.

NOTES:

1. ALL MOUNTING HARDWARE SHALL BE OF 316 STAINLESS STEEL, UNLESS OTHERWISE NOTED.
2. CONTRACTOR SHALL SUBMIT SIGNED AND SEALED WIND LOAD CALCULATIONS FROM A STRUCTURAL ENGINEER LICENSED IN THE STATE OF FLORIDA. ELECTRICAL EQUIPMENT SERVICE RACK TO BE CERTIFIED PER FLORIDA BUILDING CODE.

EDA
Electrical Design Associates
6965 PIAZZA GRANDE AVE., STE. 311
ORLANDO, FLORIDA 32835
PHONE: (407) 745-5604
FAX: (407) 745-5603
C.O.A. No. 8079
MICHAEL J. CAHILL, P.E.
Florida P.E. No. 70837

This document, together with the concepts and designs presented herein, as an instrument of service, is intended only for the specific purpose and client for which it was prepared. Reuse of and improper reliance on this document without written authorization and adaptation by Kimley-Horn and Associates, Inc. shall be without liability to Kimley-Horn and Associates, Inc.

C:\Users\jones\Electrical Design Associates\ACTIVE JOBS - Documents\Kimley-Horn\Port Orange - Lowes LS\04_Add_1\dwg\E14.dwg 12/12/2024 1:13:20 PM

No.	REVISIONS	DATE	BY
1	ADDENDUM 1	12/09/2024	EDA

Kimley»Horn
© 2024 KIMLEY-HORN AND ASSOCIATES, INC.
1530 CORNERSTONE BLVD, BUILDING 1, SUITE 200A,
DAYTONA BEACH, FL 32117
PHONE: 407-898-1511
WWW.KIMLEY-HORN.COM CA 00035106

KHA PROJECT	049204106
DATE	12/2024
SCALE	AS SHOWN
DESIGNED BY	MJC
DRAWN BY	SDV
CHECKED BY	WCN

LOWES LIFT STATION MODIFICATIONS

PREPARED FOR
CITY OF PORT ORANGE

LICENSED PROFESSIONAL

MICHAEL J. CAHILL

FL LICENSE NUMBER
70837

DATE:

LIFT STATION

EQUIPMENT RACK DETAILS

SHEET NUMBER
E14

This document, together with the concepts and designs presented herein, as an instrument of service, is intended only for the specific purpose and client for which it was prepared. Reuse of and improper reliance on this document without written authorization and adaptation by Kimley-Horn and Associates, Inc. shall be without liability to Kimley-Horn and Associates, Inc.

JBOX ENCLOSURE:

NEMA 4X RATED, W/DRIP SHIELD. FABRICATED FROM TYPE 316 STAINLESS STEEL, POLISHED FINISH. OUTER DOOR HAS 3-POINT PAD-LOCKABLE HANDLE.

BACK PANEL:

FABRICATED FROM 12ga. STEEL WITH WHITE POLYESTER POWDER COAT FINISH.

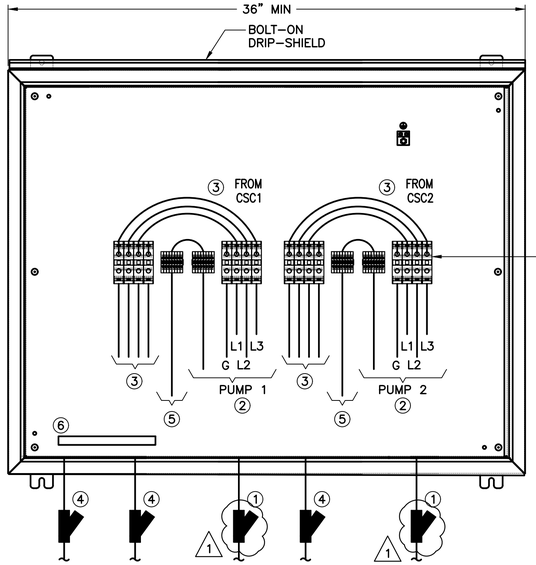

1 **NOTES:**

1. EYS FITTING. CONDUIT TO WETWELL.
2. PUMP CABLE
3. PUMP POWER TO LSCP.
4. EYS FITTING. CONDUIT TO LSCP
5. PUMP CONTROL TO LSCP.
6. TERMINAL BOX GROUND BAR.

TC1 DETAIL

N.T.S.

JBOX ENCLOSURE:

NEMA 4X RATED, W/DRIP SHIELD. FABRICATED FROM TYPE 316 STAINLESS STEEL, POLISHED FINISH. OUTER DOOR HAS 3-POINT PAD-LOCKABLE HANDLE.

BACK PANEL:

FABRICATED FROM 12ga. STEEL WITH WHITE POLYESTER POWDER COAT FINISH.

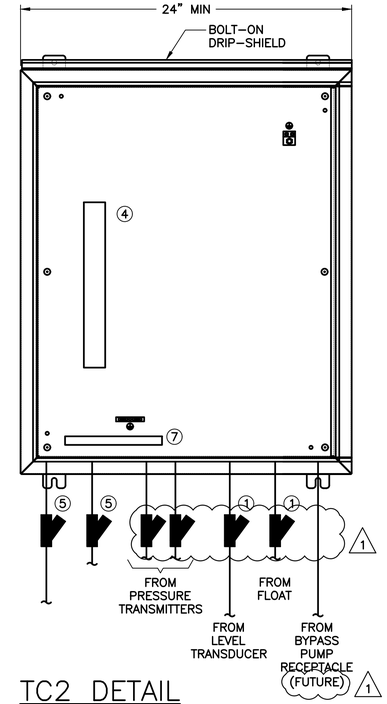

1 **NOTES:**

1. EYS FITTING. CONDUIT TO WETWELL.
2. PUMP CABLE
3. COPPER WIRE TO LSCP.
4. 24V AC CONTROL TERMINAL BLOCK
5. EYS FITTING. CONDUIT TO LSCP
6. PUMP CONTROL.
7. TERMINAL BOX GROUND BAR.

TC2 DETAIL

N.T.S.

NOTES:

1. ROUND TAPERED ALUMINUM POLE. ALLOY 6063-T6 HAPCO RTA SERIES, NO EQUAL. CONTRACTOR TO PROVIDE STRUCTURAL POLE AND FOOTING DETAILED DRAWINGS INCLUDING WIND LOAD CALCULATIONS SIGNED AND SEALED BY A STATE OF FLORIDA STRUCTURAL ENGINEER. CALCULATIONS SHALL BE IN ACCORDANCE WITH THE FLORIDA BUILDING CODE.

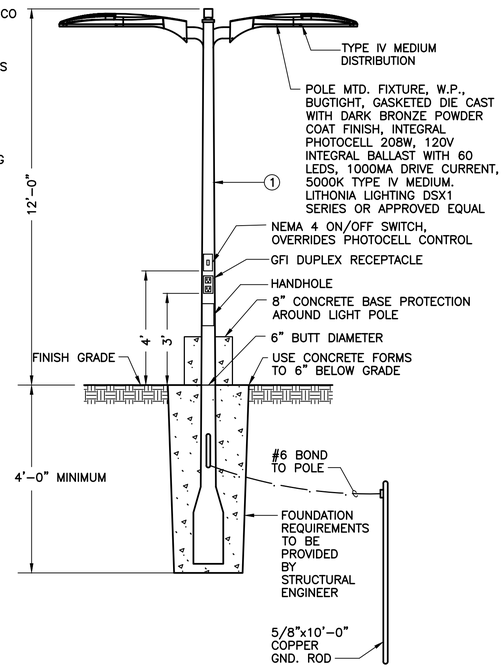

POLE MOUNTED TYPE FIXTURE DETAIL

N.T.S.

EDA
Electrical Design Associates
6965 PIAZZA GRANDE AVE., STE. 311
ORLANDO, FLORIDA 32835
PHONE: (407) 745-5604
FAX: (407) 745-5603
C.O.A. No. 8079
MICHAEL J. CAHILL, P.E.
Florida P.E. No. 70837

No.	REVISIONS	DATE	BY
1	ADDENDUM 1	12/09/2024	EDA

Kimley»Horn
© 2024 KIMLEY-HORN AND ASSOCIATES, INC.
1530 CORNERSTONE BLVD, BUILDING 1, SUITE 200A,
DAYTONA BEACH, FL 32117
PHONE: 407-898-1511
WWW.KIMLEY-HORN.COM CA 00035106

KHA PROJECT	049204106
DATE	12/2024
SCALE	AS SHOWN
DESIGNED BY	MJC
DRAWN BY	SDV
CHECKED BY	WCN

LOWES LIFT STATION MODIFICATIONS

PREPARED FOR
CITY OF PORT ORANGE

LICENSED PROFESSIONAL

MICHAEL J. CAHILL

FL LICENSE NUMBER
70837

DATE:

LIFT STATION

TERMINATION CABINET DETAILS

SHEET NUMBER
E15

C:\Users\jsnyder\Electrical Design Associates\ACTIVE-ORL - Documents\Kimley-Horn\Port Orange - Lowes LS(All_Add.1.v4wg)E15.dwg, 12/12/2024 11:26 PM

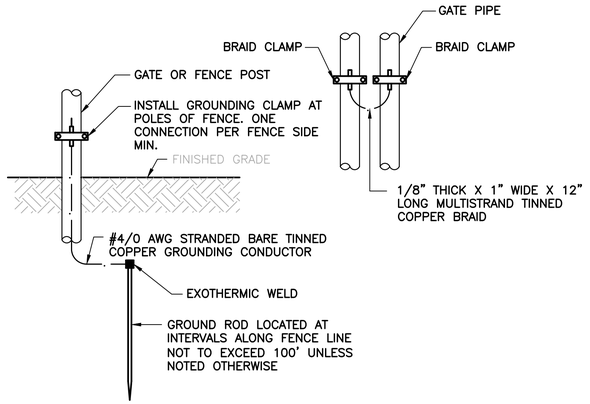

TYPICAL GATE/FENCE POST GROUNDING DETAIL

NOT TO SCALE

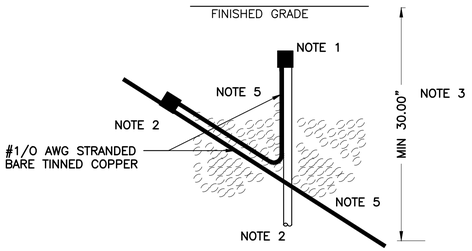

1. GROUND ROD TO COUNTERPOISE CONDUCTOR SHALL BE CONNECTED BY MEANS OF A EXOTHERMIC WELD. GROUND ROD SHALL BE 5/8 INCH IN DIAMETER AND 20 FOOT LENGTH MINIMUM.
2. COUNTERPOISE CONDUCTOR TO CONDUCTOR CONNECTION SHALL BE CONNECTED BY MEANS OF EXOTHERMIC WELD AND THE CONDUCTOR FROM COUNTERPOISE LENGTH TO GROUND ROD SHALL HAVE A MINIMUM OF 36 INCHES.
3. UNDERGROUND INSTALLATION OF COUNTERPOISE SYSTEM SHALL BE BURIED AT A MINIMUM DEPTH OF 30 INCHES.
4. ALL COMPONENTS USED IN INSTALLATION WITHIN SHALL COMPLY WITH SPECIFICATION 16450.
5. #1/0 AWG STRANDED BARE TINNED COPPER CONDUCTOR

COUNTERPOISE GROUND ROD CONNECTION DETAIL

N.T.S.

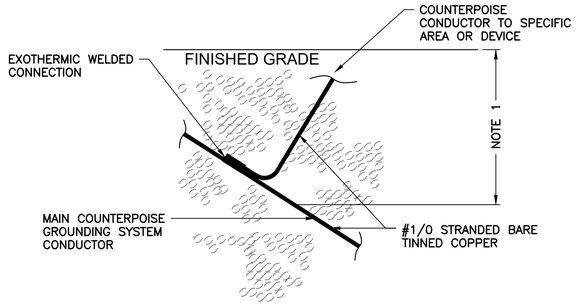

1. UNDERGROUND INSTALLATION OF COUNTERPOISE SYSTEM SHALL BE BURIED AT A MINIMUM DEPTH OF 30 INCHES.
2. ALL COMPONENTS USED IN INSTALLATION WITHIN SHALL COMPLY WITH SPECIFICATION 16450.

COUNTERPOISE CONDUCTOR CONNECTION DETAIL

N.T.S.

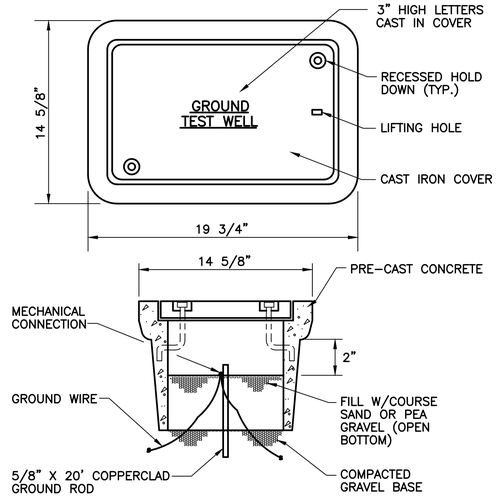

GROUND TEST WELL

N.T.S.

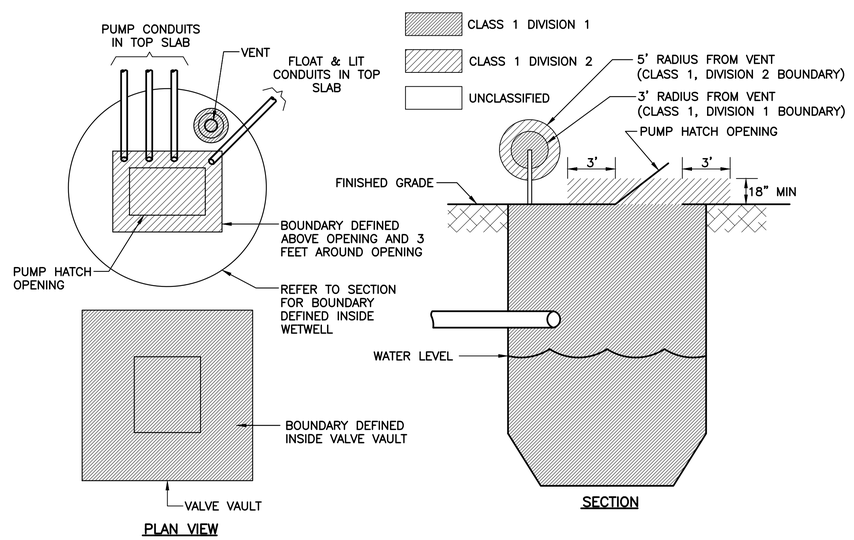

BOUNDARY CLASSIFICATION

N.T.S.

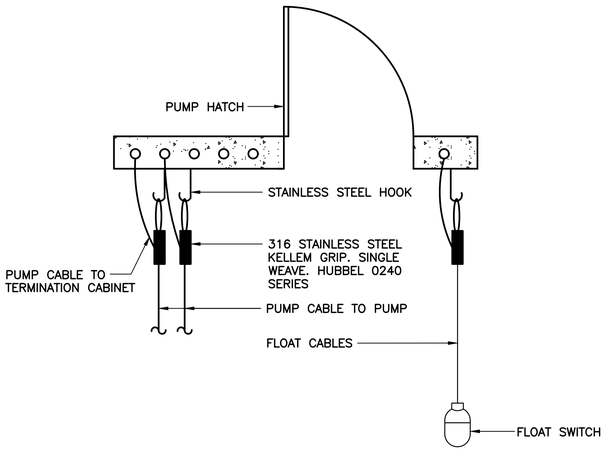

PUMP CABLE MOUNTING DETAIL

N.T.S.

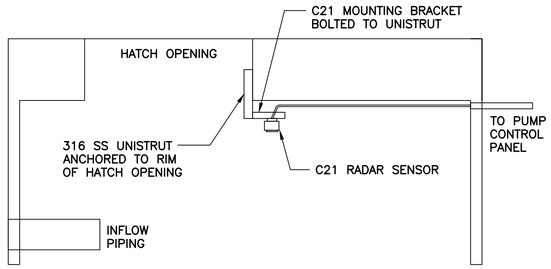

NOTES:

1. THE C21 RADAR SENSOR SHALL BE MOUNTED PER MANUFACTURER'S REQUIREMENTS, IN AN AREA FREE FROM OBSTRUCTION AND AWAY FROM THE INFLOW PIPING

VEGAPULS C21 MOUNTING DETAIL

N.T.S.

EDA
Electrical Design Associates
6965 PIAZZA GRANDE AVE., STE. 311
ORLANDO, FLORIDA 32835
PHONE: (407) 745-5604
FAX: (407) 745-5603
C.O.A. No. 8079
MICHAEL J. CAHILL, P.E.
Florida P.E. No. 70837

No.	REVISIONS	DATE	BY
1	ADDENDUM 1	12/09/2024	EDA

Kimley»Horn
© 2024 KIMLEY-HORN AND ASSOCIATES, INC.
1530 CORNERSTONE BLVD, BUILDING 1, SUITE 200A,
DAYTONA BEACH, FL 32117
PHONE: 407-898-1511
WWW.KIMLEY-HORN.COM CA 00035106

KHA PROJECT	049204106
DATE	12/2024
SCALE	AS SHOWN
DESIGNED BY	MJC
DRAWN BY	SDV
CHECKED BY	WCN

LOWES LIFT STATION MODIFICATIONS

PREPARED FOR
CITY OF PORT ORANGE

LICENSED PROFESSIONAL
MICHAEL J. CAHILL
FL LICENSE NUMBER
70837
DATE:

LIFT STATION

ELECTRICAL DETAILS 1

SHEET NUMBER
E16

This document, together with the concepts and designs presented herein, as an instrument of service, is intended only for the specific purpose and client for which it was prepared. Reuse of and improper reliance on this document without written authorization and adaptation by Kimley-Horn and Associates, Inc. shall be without liability to Kimley-Horn and Associates, Inc.

C:\Users\vyen\Electrical Design Associates\ACTIVE ORL - Documents\Kimley-Horn\Port Orange - Lowes LS\04_ASE_1\dwg\E16.dwg, 12/12/2024 11:33:32 PM

This document, together with the concepts and designs presented herein, as an instrument of service, is intended only for the specific purpose and client for which it was prepared. Reuse of and improper reliance on this document without written authorization and adaptation by Kimley-Horn and Associates, Inc. shall be without liability to Kimley-Horn and Associates, Inc.

LIFT STATION PLAN
N.T.S.

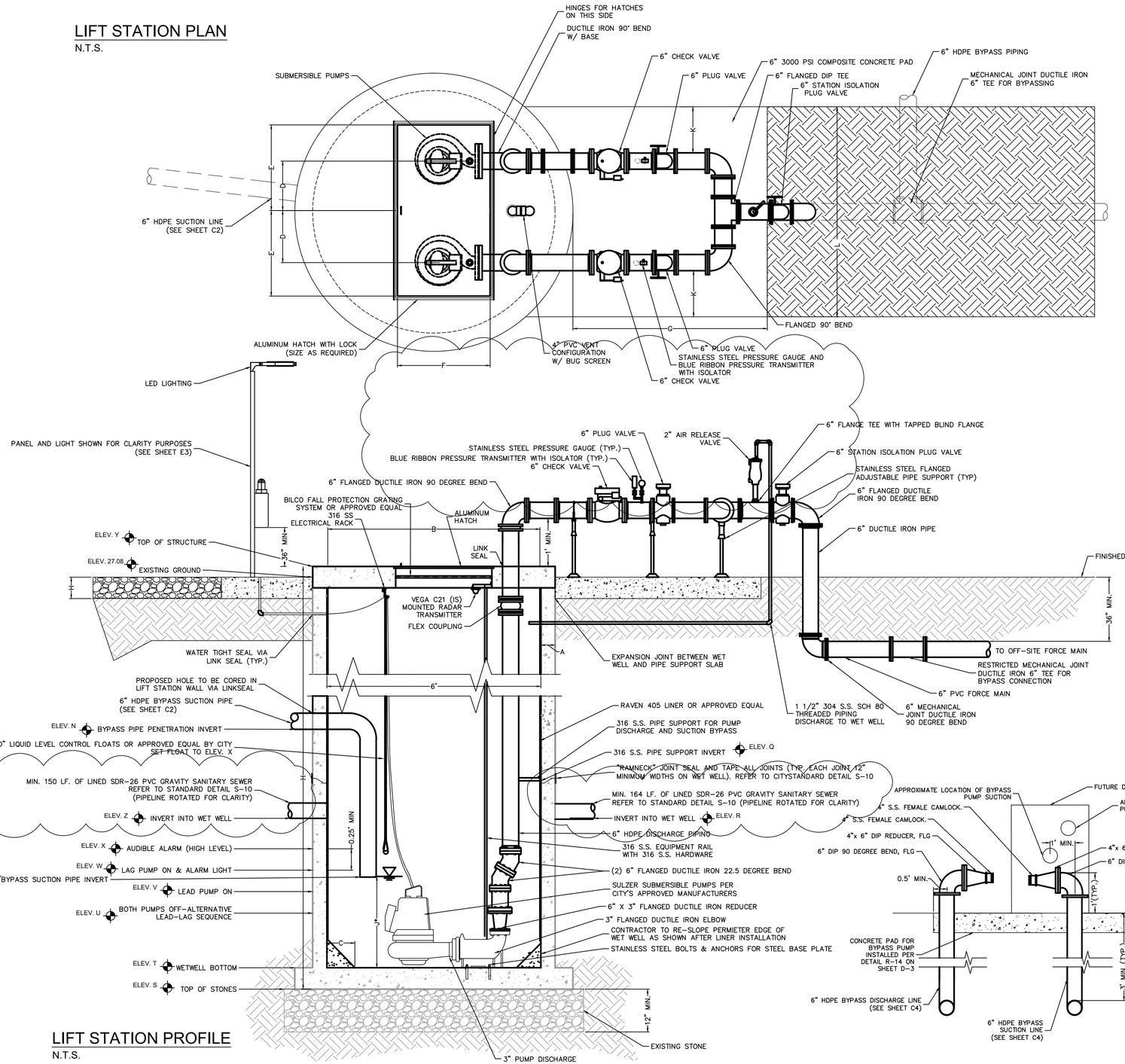

LIFT STATION PROFILE
N.T.S.

PUMPING STATIONS	DIMENSIONS	ELEV. AT CONSTRUCTION	NOTES
DIM A	8"		8" MIN.
DIM B	6'-0"		EXISTING DIA.
DIM C	*		
DIM D	*		
DIM E	24"		24" MIN.
DIM F	48"		48" MIN.
DIM G	5'-0"		5'-0" MIN.
DIM H	21.58'		
DIM J	2.75'		
DIM K	*		2' MIN.
DIM L	*		7.5' MIN
ELEV M	8.75'		
ELEV N	23.58'		3.5' BELOW COVER
ELEV Q	16.5'		
ELEV R	11.14'		EXISTING ELEV.
ELEV S	5.50'		EXISTING ELEV.
ELEV T	6.00'		EXISTING ELEV.
ELEV U	8.50'		
ELEV V	11.25'		
ELEV W	11.50'		
ELEV X	11.75'		
ELEV Y	27.56'		
ELEV Z	11.81'		EXISTING ELEV.

* PER PUMP MANUFACTURERS REQUIREMENT
** APPLICABLE TO EXISTING LIFT STATION MODIFICATIONS.
ALL DIMENSIONS TO BE DETERMINED ON A CASE BY CASE BASIS AT THE DISCRETION OF PORT ORANGE PUBLIC WORKS & UTILITIES

GENERAL NOTES:
1. ALL EXPOSED METAL SHALL BE PAINTED WITH 2 COATS OF EXTERIOR EPOXY PAINT.
2. BASE AND FIRST RISER UNIT TO BE PRECAST MONOLITHIC.
3. ALL SURFACES IN WET WELL TO BE LINED WITH CITY OF PORT ORANGE PUBLIC WORKS & UTILITIES. APPROVED MATERIALS.
4. ALL LOCATIONS WHERE PIPES ENTER OR LEAVE THE WET WELL SHALL BE MADE WATERTIGHT WITH WALL SLEEVE OR NON-SHRINK GROUT. ALL ELECTRICAL CONDUITS IN WELL TO BE SEALED.
5. ALL ELECTRIC CONDUCTORS SHALL BE TERMINATED IN A DEMARCATION PANEL. SEALED BETWEEN WET WELL AND CONTROL PANEL. SEAL OFFS SHALL BE SPLIT TYPE SERVICEABLE. THERE SHALL BE NO VALVES OR ELECTRICAL JUNCTION BOXES IN WET WELL.
6. ALL ELECTRICAL CABLES SHALL BE CONTINUOUS TO CONTROL PANEL OR BOX.
7. WET WELL COVER SHALL BE ALUMINUM WITH 316 S.S. HARDWARE AND LOCK BRACKET. SIZE AS REQUIRED BY PUMP MANUFACTURER AND APPROVED BY CITY OF PORT ORANGE PUBLIC WORKS & UTILITIES.
8. FLEXIBLE COUPLING SHALL BE SLEEVE TYPE.'
9. PUMPS SHALL BE:

   MANUFACTURER: SULZER; MODEL: XFP80C-CB1 60HZ; IMP: .4; DIA:180 MM; SPEED: 1751 RPM; DISCHARGE SIZE: 3" IN.; VOLTAGE: 230V; HZ.: 60 Hz; PHASE: 3 Ph; H.P.: 5 hp; MIN. SOLID SIZE: 3.0 IN.; CURVE: 60HZ.

10. OPERATING CONDITIONS SHALL BE 240 GPM AT 36.11 FEET TDH.
11. ALL HARDWARE IN WET WELL TO BE 316 STAINLESS STEEL.
12. DISCHARGE PIPING TO BE 6" MINIMUM.
13. WET WELL HATCH TO OPEN TOWARDS DISCHARGE PIPING.
14. ALL PERVIOUS SURFACES WITHIN CITY OWNED EASEMENT TO HAVE 6" THICK LAYER OF FDOT #57 STONE OVER LAYER OF LANDSCAPE FABRIC.

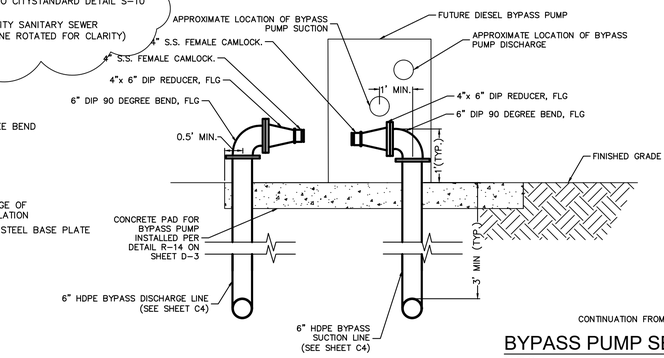

BYPASS PUMP SECTION
N.T.S.

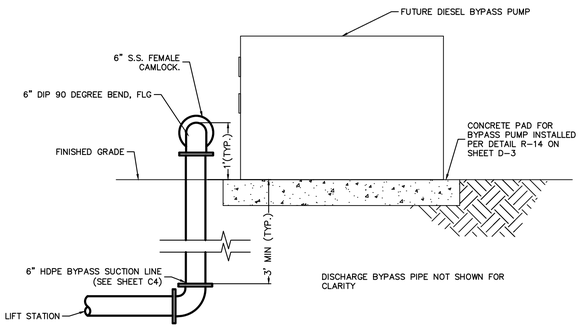

No.	REVISIONS	DATE	BY
1	ADDENDUM 1	12/9/2024	BDB

Kimley»Horn
© 2024 KIMLEY-HORN AND ASSOCIATES, INC.
1530 CORNERSTONE BLVD, BUILDING 1, SUITE 200A,
DAYTONA BEACH, FL 32117
PHONE: 407-898-1511
WWW.KIMLEY-HORN.COM CA 00035106

KHA PROJECT	049204106
DATE	08/16/2024
SCALE	AS SHOWN
DESIGNED BY	CAB
DRAWN BY	BDB
CHECKED BY	NEM

LOWES LIFT STATION MODIFICATIONS

PREPARED FOR
CITY OF PORT ORANGE

LICENSED PROFESSIONAL
NICOLE E. MCCONNELL
FL LICENSE NUMBER
73789
DATE:

LIFT STATION
LIFT STATION MECHANICAL PLAN

SHEET NUMBER
M1

CITY COUNCIL AGENDA ITEM

COUNCIL MEETING DATE 3/18/2025

SUBJECT: (D6b) Approval to Award ITB #25-02 for the Construction of the Forestry Building to SA Casey Construction, Inc.

DEPARTMENT: Engineering

GOAL: 2 - Infrastructure

RECOMMENDED MOTION: Move to approve to award ITB 25-02 to SA Casey Construction, Inc. for an amount not to exceed $668,914.12; and authorize the Mayor and City Clerk to execute all contract required documents.

SUMMARY: The Engineering Department is requesting Council approval to award ITB #25-02 to SA Casey Construction, Inc. for the base bid amount of $649,661.70 and Additive Alternative # 1 in the amount of $19,252.42 for a total Construction Agreement (AIA) not to exceed $668,914.12.

ITB #25-02 involves the construction of a storage facility to house equipment and office personnel for the maintenance of the wellfield and conservation lands owned by the city. Currently the forestry equipment is stored outside. This is causing a decrease in the equipment's lifespan due to exposure to the elements. The design and architectural services were provided by Hall & Ogle Architects, Inc.

On January 14, 2025, the Purchasing Manager received six (6) sealed bid responses; two (2) were deemed nonresponsive. All amounts include the base bid and the additive alternative #1. Additive Alternative #1 is for the installation of 3-inches of recycled asphalted pavement on top of the 6" stabilized base.

- C2 Solutions, Inc. Non-Responsive
- Paul Culver Construction, Inc. $734,970.00
- The Watauga Company $704,000.00
- Boulevard Contractors Corp Non-Responsive
- AG Pifer Construction, Inc. $709,098.40
- SA Casey Construction, Inc. $668,914.12

Staff has reviewed and approved SA Casey Construction, Inc. as the best responsive bidder. Funding for this project was approved in the current Fiscal Year CIP.

PRESENTER: Junos Reed

ATTACHMENTS:

1.	S.A. Casey Construction, Inc. AIA Agreement ITB 25-02 Construction of Forestry Building FINAL	S.A. Casey Construction, Inc. AIA Agreement ITB 25-02 Construction of Forestry Building FINAL.pdf
2.	S.A. Casey Construction, Inc. A201-2017 General Conditions ITB 25-02 Construction of Forestry Building	S.A. Casey Construction, Inc. A201-2017 General Conditions ITB 25-02 Construction of Forestry Building.pdf
3.	ITB 25-02 AIA Contract Attachment Forms	ITB 25-02 AIA Contract Attachment Forms.pdf
4.	SA Casey Construction Submittal	SA Casey Construction Submittal.pdf
5.	Signed Docs by SACC 1.31.2025	Signed Docs by SACC 1.31.2025.pdf
6.	ITB 25-02 Bid Tabulation	ITB 25-02 Bid Tabulation.pdf
7.	ITB 25-02 NOTICE OF INTENT TO AWARD	ITB 25-02 NOTICE OF INTENT TO AWARD.pdf
8.	Attachment 2 Forestry Management Storage Barn_CD_8.12.24	Attachment 2 Forestry Management Storage Barn_CD_8.12.24.pdf
9.	Attachment 3 Forestry Management Storage Barn_Project Manual_7-24-24	Attachment 3 Forestry Management Storage Barn_Project Manual_7-24-24.pdf
10.	City of Ocoee reference for SA Casey	City of Ocoee reference for SA Casey.pdf
11.	ITB 25-02 Attachment 1 Schedule of Unit Pricing Alternate No.1_Final	ITB 25-02 Attachment 1 Schedule of Unit Pricing Alternate No.1_Final.pdf
12.	ITB 25-02 Bid Tabulation	ITB 25-02 Bid Tabulation.xlsx
13.	ITB 25-02 Construction of Forestry Building_Final	ITB 25-02 Construction of Forestry Building_Final.pdf
14.	Orange County reference for SA Casey	Orange County reference for SA Casey.pdf
15.	ITB 25-02 Addendum #1	ITB 25-02 Addendum #1.pdf

Julia Wiggins	Created/Initiated - 2/4/2025
Richard Colby	Approved - 2/4/2025
Junos Reed	Approved - 2/4/2025
Linda Truitt	Approved - 2/5/2025
Matthew Jones	Approved - 3/7/2025
Wayne Clark	Final Approval - 3/7/2025

AIA® Document A101® – 2017

Standard Form of Agreement Between Owner and Contractor *where the basis of payment is a Stipulated Sum*

AGREEMENT made as of the day of in the year 2025
(In words, indicate day, month and year.)

BETWEEN the Owner:
(Name, legal status, address and other information)

City of Port Orange, a Municipal Corporation
1000 City Center Circle
Port Orange, Florida 32129
(386) 506-5575

and the Contractor:
(Name, legal status, address and other information)

S. A. Casey Construction, Inc.
2822 Commerce Park Drive
Suite 400
Orlando, Florida 32819

for the following Project:
(Name, location and detailed description)

ITB 25-02 Construction of Forestry Building

The Architect:
(Name, legal status, address and other information)

Hall & Ogle Architects, Inc.
208 Magnolia Avenue
Daytona Beach, Florida 32114

The Owner and Contractor agree as follows.

ADDITIONS AND DELETIONS:
The author of this document may have revised the text of the original AIA standard form. An *Additions and Deletions Report* that notes revisions to the standard form text is available from the author and should be reviewed. A vertical line in the left margin of this document indicates where the author has added to or deleted from the original AIA text.

This document has important legal consequences. Consultation with an attorney is encouraged with respect to its completion or modification.

The parties should complete A101®–2017, Exhibit A, Insurance and Bonds, contemporaneously with this Agreement. AIA Document A201®–2017, General Conditions of the Contract for Construction, is adopted in this document by reference. Do not use with other general conditions unless this document is modified.

AIA Document A101 – 2017. Copyright © 1915, 1918, 1925, 1937, 1951, 1958, 1961, 1963, 1967, 1974, 1977, 1987, 1991, 1997, 2007 and 2017. All rights reserved. "The American Institute of Architects," "American Institute of Architects," "AIA," the AIA Logo, and "AIA Contract Documents" are trademarks of The American Institute of Architects. This document was produced at 17:12:28 EST on 03/06/2025 under Subscription No.20240046071 which expires on 08/01/2025, is not for resale, is licensed for one-time use only, and may only be used in accordance with the AIA Contract Documents® Terms of Service. To report copyright violations, e-mail docinfo@aiacontracts.com.
User Notes: (67ca1d54ac1df796e2d60238)

TABLE OF ARTICLES

1 THE CONTRACT DOCUMENTS

2 THE WORK OF THIS CONTRACT

3 DATE OF COMMENCEMENT AND SUBSTANTIAL COMPLETION

4 CONTRACT SUM

5 PAYMENTS

6 DISPUTE RESOLUTION

7 TERMINATION OR SUSPENSION

8 MISCELLANEOUS PROVISIONS

9 ENUMERATION OF CONTRACT DOCUMENTS

EXHIBIT A INSURANCE AND BONDS

ARTICLE 1 THE CONTRACT DOCUMENTS

The Contract Documents consist of this Agreement, Conditions of the Contract (General, Supplementary, and other Conditions), Drawings, Specifications, Addenda issued prior to execution of this Agreement, other documents listed in this Agreement, and Modifications issued after execution of this Agreement, all of which form the Contract, and are as fully a part of the Contract as if attached to this Agreement or repeated herein. The Contract represents the entire and integrated agreement between the parties hereto and supersedes prior negotiations, representations, or agreements, either written or oral. An enumeration of the Contract Documents, other than a Modification, appears in Article 9.

ARTICLE 2 THE WORK OF THIS CONTRACT

The Contractor shall fully execute the Work described in the Contract Documents, except as specifically indicated in the Contract Documents to be the responsibility of others.

ARTICLE 3 DATE OF COMMENCEMENT AND SUBSTANTIAL COMPLETION

§ 3.1 The date of commencement of the Work shall be:
(Check one of the following boxes.)

[ ] The date of this Agreement.

[X] A date set forth in a notice to proceed issued by the Owner.

[ ] Established as follows:
(Insert a date or a means to determine the date of commencement of the Work.)

If a date of commencement of the Work is not selected, then the date of commencement shall be the date of this Agreement.

§ 3.2 The Contract Time shall be measured from the date of commencement of the Work.

§ 3.3 Substantial Completion

§ 3.3.1 Subject to adjustments of the Contract Time as provided in the Contract Documents, the Contractor shall achieve Substantial Completion of the entire Work:
(Check one of the following boxes and complete the necessary information.)

AIA Document A101 – 2017. Copyright © 1915, 1918, 1925, 1937, 1951, 1958, 1961, 1963, 1967, 1974, 1977, 1987, 1991, 1997, 2007 and 2017. All rights reserved. “The American Institute of Architects,” “American Institute of Architects,” “AIA,” the AIA Logo, and “AIA Contract Documents” are trademarks of The American Institute of Architects. This document was produced at 17:12:28 EST on 03/06/2025 under Subscription No.20240046071 which expires on 08/01/2025, is not for resale, is licensed for one-time use only, and may only be used in accordance with the AIA Contract Documents® Terms of Service. To report copyright violations, e-mail docinfo@aiacontracts.com.
User Notes: (67ca1d54ac1df796e2d60238)

[ ] Not later than ( ) calendar days from the date of commencement of the Work.

[X] By the following date: Contractor shall achieve Substantial Completion of the work not later that 210 days from the issuance of a written Notice to Proceed issued by the City.

§ 3.3.2 Subject to adjustments of the Contract Time as provided in the Contract Documents, if portions of the Work are to be completed prior to Substantial Completion of the entire Work, the Contractor shall achieve Substantial Completion of such portions by the following dates:

Portion of Work	Substantial Completion Date
N/A	N/A

§ 3.3.3 If the Contractor fails to achieve Substantial Completion as provided in this Section 3.3, liquidated damages, if any, shall be assessed as set forth in Section 4.5.

ARTICLE 4 CONTRACT SUM

§ 4.1 The Owner shall pay the Contractor the Contract Sum in current funds for the Contractor's performance of the Contract. The Contract Sum shall be Six Hundred Sixty-Eight Thousand Nine Hundred Fourteen and 12/100 Dollars ($ 668,914.12), subject to additions and deductions as provided in the Contract Documents.

§ 4.2 Alternates

§ 4.2.1 Alternates, if any, included in the Contract Sum:

Item	Price
Alternate 1	$19,252.42

§ 4.2.2 Subject to the conditions noted below, the following alternates may be accepted by the Owner following execution of this Agreement. Upon acceptance, the Owner shall issue a Modification to this Agreement.
(Insert below each alternate and the conditions that must be met for the Owner to accept the alternate.)

Item	Price	Conditions for Acceptance
N/A	N/A	N/A

§ 4.3 Allowances, if any, included in the Contract Sum:
(Identify each allowance.)

Item	Price
N/A	N/A

§ 4.4 Unit prices, if any:
(Identify the item and state the unit price and quantity limitations, if any, to which the unit price will be applicable.)

Item	Units and Limitations	Price per Unit ($0.00)
N/A	N/A	N/A

§ 4.5 Liquidated damages, if any:
(Insert terms and conditions for liquidated damages, if any.)

0.00

§ 4.6 Other:
(Insert provisions for bonus or other incentives, if any, that might result in a change to the Contract Sum.)

AIA Document A101 – 2017. Copyright © 1915, 1918, 1925, 1937, 1951, 1958, 1961, 1963, 1967, 1974, 1977, 1987, 1991, 1997, 2007 and 2017. All rights reserved. "The American Institute of Architects," "American Institute of Architects," "AIA," the AIA Logo, and "AIA Contract Documents" are trademarks of The American Institute of Architects. This document was produced at 17:12:28 EST on 03/06/2025 under Subscription No.20240046071 which expires on 08/01/2025, is not for resale, is licensed for one-time use only, and may only be used in accordance with the AIA Contract Documents® Terms of Service. To report copyright violations, e-mail docinfo@aiacontracts.com.
User Notes: (67ca1d54ac1df796e2d60238)

ARTICLE 5 PAYMENTS

§ 5.1 Progress Payments

§ 5.1.1 Based upon Applications for Payment submitted to the Architect by the Contractor and Certificates for Payment issued by the Architect, the Owner shall make progress payments on account of the Contract Sum to the Contractor as provided below and elsewhere in the Contract Documents.

§ 5.1.2 The period covered by each Application for Payment shall be one calendar month ending on the last day of the month, or as follows:

§ 5.1.3 Provided that an Application for Payment is received by the Architect not later than the 1st day of a month, and the Contractor obtains Architect's certification of the application for payment within 10 days thereafter, then the Owner shall make payment of the amount certified to the Contractor not later than the 10th day of the following month. If an Application for Payment is received by the Architect after the application date fixed above, and the Contractor obtains Architect's certification of the application for payment within 10 days thereafter, then payment of the amount certified shall be made by the Owner not later than thirty (30) days after the Architect receives the Application for Payment.
(Federal, state or local laws may require payment within a certain period of time.)

§ 5.1.4 Each Application for Payment shall be based on the most recent schedule of values submitted by the Contractor in accordance with the Contract Documents. The schedule of values shall allocate the entire Contract Sum among the various portions of the Work. The schedule of values shall be prepared in such form, and supported by such data to substantiate its accuracy, as the Architect may require. This schedule, unless objected to by the Architect, shall be used as a basis for reviewing the Contractor's Applications for Payment.

§ 5.1.5 Applications for Payment shall show the percentage of completion of each portion of the Work as of the end of the period covered by the Application for Payment.

§ 5.1.6 In accordance with AIA Document A201™–2017, General Conditions of the Contract for Construction, and subject to other provisions of the Contract Documents, the amount of each progress payment shall be computed as follows:

§ 5.1.6.1 The amount of each progress payment shall first include:

- **.1** That portion of the Contract Sum properly allocable to completed Work;
- **.2** That portion of the Contract Sum properly allocable to materials and equipment delivered and suitably stored at the site for subsequent incorporation in the completed construction, or, if approved in advance by the Owner, suitably stored off the site at a location agreed upon in writing; and
- **.3** That portion of Construction Change Directives that the Architect determines, in the Architect's professional judgment, to be reasonably justified.

§ 5.1.6.2 The amount of each progress payment shall then be reduced by:

- **.1** The aggregate of any amounts previously paid by the Owner;
- **.2** The amount, if any, for Work that remains uncorrected and for which the Architect has previously withheld a Certificate for Payment as provided in Article 9 of AIA Document A201–2017;
- **.3** Any amount for which the Contractor does not intend to pay a Subcontractor or material supplier, unless the Work has been performed by others the Contractor intends to pay;
- **.4** For Work performed or defects discovered since the last payment application, any amount for which the Architect may withhold payment, or nullify a Certificate of Payment in whole or in part, as provided in Article 9 of AIA Document A201–2017; and
- **.5** Retainage withheld pursuant to Section 5.1.7.

§ 5.1.7 Retainage

§ 5.1.7.1 For each progress payment made prior to Substantial Completion of the Work, the Owner may withhold the following amount, as retainage, from the payment otherwise due:
(Insert a percentage or amount to be withheld as retainage from each Application for Payment. The amount of retainage may be limited by governing law.)

AIA Document A101 – 2017. Copyright © 1915, 1918, 1925, 1937, 1951, 1958, 1961, 1963, 1967, 1974, 1977, 1987, 1991, 1997, 2007 and 2017. All rights reserved. "The American Institute of Architects," "American Institute of Architects," "AIA," the AIA Logo, and "AIA Contract Documents" are trademarks of The American Institute of Architects. This document was produced at 17:12:28 EST on 03/06/2025 under Subscription No.20240046071 which expires on 08/01/2025, is not for resale, is licensed for one-time use only, and may only be used in accordance with the AIA Contract Documents® Terms of Service. To report copyright violations, e-mail docinfo@aiacontracts.com.
User Notes: (67ca1d54ac1df796e2d60238)

§ 5.1.7.1.1 The following items are not subject to retainage:
(Insert any items not subject to the withholding of retainage, such as general conditions, insurance, etc.)

§ 5.1.7.2 Reduction or limitation of retainage, if any, shall be as follows:
(If the retainage established in Section 5.1.7.1 is to be modified prior to Substantial Completion of the entire Work, including modifications for Substantial Completion of portions of the Work as provided in Section 3.3.2, insert provisions for such modifications.)

No reduction of retainage below five percent (5%).

§ 5.1.7.3 Ex
(Insert any other conditions for release of retainage upon Substantial Completion.)

Deleted in its entirety.

§ 5.1.8 If final completion of the Work is materially delayed through no fault of the Contractor, the Owner shall pay the Contractor any additional amounts in accordance with Article 9 of AIA Document A201–2017.

§ 5.1.9 Except with the Owner's prior approval, the Contractor shall not make advance payments to suppliers for materials or equipment which have not been delivered and stored at the site.

§ 5.2 Final Payment

§ 5.2.1 Final payment, constituting the entire unpaid balance of the Contract Sum, shall be made by the Owner to the Contractor when

.1 the Contractor has fully performed the Contract except for the Contractor's responsibility to correct Work as provided in Article 12 of AIA Document A201–2017, and to satisfy other requirements, if any, which extend beyond final payment; and

.2 a final Certificate for Payment has been issued by the Architect.

§ 5.2.2 The Owner's final payment to the Contractor shall be made no later than 30 days after the issuance of the Architect's final Certificate for Payment, or as follows:

§ 5.3 Interest

Payments due and unpaid under the Contract shall bear interest from the date payment is due at the rate stated below, or in the absence thereof, at the legal rate prevailing from time to time at the place where the Project is located.
(Insert rate of interest agreed upon, if any.)

All payments shall be governed by the Local Government Prompt Payment Act as set forth in Sections 218.70 through 218.79, Florida Statutes, as amended.

ARTICLE 6 DISPUTE RESOLUTION

§ 6.1 Initial Decision Maker

The Architect will serve as the Initial Decision Maker pursuant to Article 15 of AIA Document A201–2017, unless the parties appoint below another individual, not a party to this Agreement, to serve as the Initial Decision Maker.
(If the parties mutually agree, insert the name, address and other contact information of the Initial Decision Maker, if other than the Architect.)

Architect's actions, subject to recommendation to Owner, and Owner approval prior to action.

AIA Document A101 – 2017. Copyright © 1915, 1918, 1925, 1937, 1951, 1958, 1961, 1963, 1967, 1974, 1977, 1987, 1991, 1997, 2007 and 2017. All rights reserved. "The American Institute of Architects," "American Institute of Architects," "AIA," the AIA Logo, and "AIA Contract Documents" are trademarks of The American Institute of Architects. This document was produced at 17:12:28 EST on 03/06/2025 under Subscription No.20240046071 which expires on 08/01/2025, is not for resale, is licensed for one-time use only, and may only be used in accordance with the AIA Contract Documents® Terms of Service. To report copyright violations, e-mail docinfo@aiacontracts.com.
User Notes: (67ca1d54ac1df796e2d60238)

§ 6.2 Binding Dispute Resolution

For any Claim subject to, but not resolved by, mediation pursuant to Article 15 of AIA Document A201–2017, the method of binding dispute resolution shall be as follows:
(Check the appropriate box.)

[ ] Arbitration pursuant to Section 15.4 of AIA Document A201–2017

[X] Litigation in a court of competent jurisdiction. If the Owner and Contractor do not select a method of binding dispute resolution, or do not subsequently agree in writing to a binding dispute resolution method other than litigation, Claims shall be resolved by litigation, and shall have its venue located exclusively in the Circiut Court of Volusia County, Florida, and the Parties hereby expressly consent and submit themselves to the personal jurisdiction and venue of the Court.

ARTICLE 7 TERMINATION OR SUSPENSION

§ 7.1 The Contract may be terminated by the Owner or the Contractor as provided in Article 14 of AIA Document A201–2017, as modified by the Owner.

§ 7.1.1 If the Contract is terminated for the Owner's convenience in accordance with Article 14 of AIA Document A201–2017, then the Owner shall pay the Contractor a termination fee as follows:
(Insert the amount of, or method for determining, the fee, if any, payable to the Contractor following a termination for the Owner's convenience.)

§ 7.2 The Work may be suspended by the Owner as provided in Article 14 of AIA Document A201–2017, as modified by the Owner.

ARTICLE 8 MISCELLANEOUS PROVISIONS

§ 8.1 Where reference is made in this Agreement to a provision of AIA Document A201–2017 or another Contract Document, the reference refers to that provision as amended or supplemented by other provisions of the Contract Documents.

§ 8.2 The Owner's representative:
(Name, address, email address, and other information)

Junos Reed, City Engineer
1000 City Center Circle
Port Orange, Florida 32129
jureed@port-orange.org
(386) 506-5751

§ 8.3 The Contractor's representative:
(Name, address, email address, and other information)

S. A. Casey Construction, Inc.
2822 Commerce Park Drive
Suite 400
Orlando, Florida 32819
jcasey@sacaseyconstruction.com
(407) 240-6775

AIA Document A101 – 2017. Copyright © 1915, 1918, 1925, 1937, 1951, 1958, 1961, 1963, 1967, 1974, 1977, 1987, 1991, 1997, 2007 and 2017. All rights reserved. "The American Institute of Architects," "American Institute of Architects," "AIA," the AIA Logo, and "AIA Contract Documents" are trademarks of The American Institute of Architects. This document was produced at 17:12:28 EST on 03/06/2025 under Subscription No.20240046071 which expires on 08/01/2025, is not for resale, is licensed for one-time use only, and may only be used in accordance with the AIA Contract Documents® Terms of Service. To report copyright violations, e-mail docinfo@aiacontracts.com.
User Notes: (67ca1d54ac1df796e2d60238)

§ 8.4 Neither the Owner's nor the Contractor's representative shall be changed without ten days' prior notice to the other party.

§ 8.5 Insurance and Bonds

§ 8.5.1 The Owner and the Contractor shall purchase and maintain insurance as set forth in AIA Document A101™–2017, Standard Form of Agreement Between Owner and Contractor where the basis of payment is a Stipulated Sum, Exhibit A, Insurance and Bonds, and elsewhere in the Contract Documents.

§ 8.5.2 The Contractor shall provide bonds as set forth in AIA Document A101™–2017 Exhibit A, and elsewhere in the Contract Documents.

§ 8.6 Notice in electronic format, pursuant to Article 1 of AIA Document A201–2017, may be given in accordance with a building information modeling exhibit, if completed, or as otherwise set forth below:
(If other than in accordance with a building information modeling exhibit, insert requirements for delivering notice in electronic format such as name, title, and email address of the recipient and whether and how the system will be required to generate a read receipt for the transmission.)

§ 8.7 Other provisions:

§8.7.1 PUBLIC RECORD COMPLIANCE Contractor shall comply with public records laws as set forth in Section 119, Florida Statutes, and shall specifically: (a) keep and maintain public records that ordinarily and necessarily would be required by the City in order to perform the service; (b) provide the public with access to public records on the same terms and conditions that the City would provide the records at a cost that does not exceed the cost provided in Section 119, Florida Statutes, or as otherwise provided by law; (c) ensure that public records that are exempt or confidential and exempt from public records disclosure requirements are not disclosed except as authorized by law; and (d) meet all requirements for retaining public records and transfer to the City, at no cost, all public records in possession of the Contractor upon termination of the Contract and destroy any duplicate public records that are exempt or confidential and exempt from public records disclosure requirements. All records stored electronically must be provided to the City in a format that is compatible with the information technology systems of the City.

§ 8.7.2 RECORDS

The design, permits and all other records prepared by the Contractor, assembled for the City, subcontracted for the City, and any other records related to the scope of work in the possession of the Contractor shall be retained by the Contractor for the requisite time set forth in Florida Administration Code Rule 1 b-24 http://dos.myflorida.com/library-archives/records-management/. Contractor may dispose of the records in accordance with Florida law, upon receipt of a signed written release signed by the City Attorney. Contractor agrees to indemnify the City for failure to comply with the requirements of this paragraph including costs of litigation and legal fees incurred through all appeals. City reserves the right to select and approve the defense attorney.

§ 8.7.3 FORCE MAJEURE

Neither party shall be liable for any delay in performance or failure to perform any obligation hereunder if, and to the extent that, such failure or delay is caused by an event of Force Majeure. Force Majeure shall mean any act, event or condition that is beyond the party's reasonable control, that materially and adversely affects the party's ability to perform its obligations hereunder, and that is not the result of the party's willful neglect, error, omission or failure to exercise reasonable due diligence.

§ 8.7.4 CONTRACT CONSTRUCTION

This Contract may be executed in one or more counterparts, each of which shall be deemed an original but all of which together constitute one and the same instrument. The delivery by facsimile or e-mail of an executed copy of this Contract shall be deemed valid as if an original signature was delivered. No contract shall be formed between the Contractor and the City until both Parties have signed this Contract.

§ 8.7.5 FINANCIAL DISCLOSURES

AIA Document A101 – 2017. Copyright © 1915, 1918, 1925, 1937, 1951, 1958, 1961, 1963, 1967, 1974, 1977, 1987, 1991, 1997, 2007 and 2017. All rights reserved. "The American Institute of Architects," "American Institute of Architects," "AIA," the AIA Logo, and "AIA Contract Documents" are trademarks of The American Institute of Architects. This document was produced at 17:12:28 EST on 03/06/2025 under Subscription No.20240046071 which expires on 08/01/2025, is not for resale, is licensed for one-time use only, and may only be used in accordance with the AIA Contract Documents® Terms of Service. To report copyright violations, e-mail docinfo@aiacontracts.com.
User Notes: (67ca1d54ac1df796e2d60238)

During the term of this Contract, Contractor covenants and agrees that it will keep adequate books and records of accounts in accordance with Generally Accepted Accounting Principles (GAAP). Contractor further covenants and agrees that in the event the Contractor becomes insolvent and/or fails to pay its current obligations when they become due, Contractor shall so advise Owner of such situation and, upon request from the Owner, Contractor shall provide to Owner financial statements of Contractor, including current income and expense statements of Contractor, consolidated balance sheets signed by a financial officer of Contractor, and audited reports provided by Contractor to Contractor's Surety, audited financial statements certified by a Certified Public Accountant concerning the financial affairs of the Contractor and all affiliates of Contractor, and such other financial information requested by Owner. All such financial information shall comply with GAAP.

In the event that Contractor becomes insolvent and/or fails to pay its obligations when they become due, Contractor hereby authorized its sureties, lenders, financial institutions and other third parties to release Owner financial information requested by Owner, including, but not limited to, the financial information described in the preceding paragraph.

§ 8.7.6 WAIVER OF JURY TRIAL
All parties hereby waive any and all right to any trial by jury in any action or proceeding arising directly or indirectly hereunder.

ARTICLE 9 ENUMERATION OF CONTRACT DOCUMENTS

§ 9.1 This Agreement is comprised of the following documents:

.1 AIA Document A201™–2017, General Conditions of the Contract for Construction

.2 AIA Document A101™–2017, Standard Form of Agreement Between Owner and Contractor, as modified by Owner with attached Exhibits "A' through "F," all of which are made a part hereof by this reference.

.3 Exhibit A, Insurance and Bonds: AIA Document A101™ 2017

.4 Exhibit B, ITB 250-02 Construction of Forestry Building

.5 Exhibit C, Contractor's Proposal

.6 Exhibit D, Applications for Payment

.7 Exhibit E, Forms

.8 Exhibit F, Contractor's Completion Checklist

.9 ITB 25-02 Drawings, Specifications, and Requirements

Title	Date	Pages
Attachment "2" – Forestry Management Storage Barn, on file with City Engineer	June 18, 2024	1 – 23
Attachment "3" – Forestry Management Storage Barn Project Manual 100% Construction Documents, on file with City Engineer	June 18, 2024	1 - 74

.10 Addenda, if any:

AIA Document A101 – 2017. Copyright © 1915, 1918, 1925, 1937, 1951, 1958, 1961, 1963, 1967, 1974, 1977, 1987, 1991, 1997, 2007 and 2017. All rights reserved. "The American Institute of Architects," "American Institute of Architects," "AIA," the AIA Logo, and "AIA Contract Documents" are trademarks of The American Institute of Architects. This document was produced at 17:12:28 EST on 03/06/2025 under Subscription No.20240046071 which expires on 08/01/2025, is not for resale, is licensed for one-time use only, and may only be used in accordance with the AIA Contract Documents® Terms of Service. To report copyright violations, e-mail docinfo@aiacontracts.com.
User Notes: (67ca1d54ac1df796e2d60238)

Portions of Addenda relating to bidding or proposal requirements are not part of the Contract Documents unless the bidding or proposal requirements are also enumerated in this Article 9.

This Agreement entered into as of the day and year first written above.

OWNER *(Signature)*	**CONTRACTOR** *(Signature)*
BY: Scott Stiltner, Mayor	BY: Ian Casey, Vice President
(Printed name and title)	*(Printed name and title)*

Date:_____
Date:_____

AIA Document A101 – 2017. Copyright © 1915, 1918, 1925, 1937, 1951, 1958, 1961, 1963, 1967, 1974, 1977, 1987, 1991, 1997, 2007 and 2017. All rights reserved. "The American Institute of Architects," "American Institute of Architects," "AIA," the AIA Logo, and "AIA Contract Documents" are trademarks of The American Institute of Architects. This document was produced at 17:12:28 EST on 03/06/2025 under Subscription No.20240046071 which expires on 08/01/2025, is not for resale, is licensed for one-time use only, and may only be used in accordance with the AIA Contract Documents® Terms of Service. To report copyright violations, e-mail docinfo@aiacontracts.com.
User Notes: (67ca1d54ac1df796e2d60238)

Additions and Deletions Report for
AIA® Document A101® – 2017

This Additions and Deletions Report, as defined on page 1 of the associated document, reproduces below all text the author has added to the standard form AIA document in order to complete it, as well as any text the author may have added to or deleted from the original AIA text. Added text is shown underlined. Deleted text is indicated with a horizontal line through the original AIA text.

Note: This Additions and Deletions Report is provided for information purposes only and is not incorporated into or constitute any part of the associated AIA document. This Additions and Deletions Report and its associated document were generated simultaneously by AIA software at 17:12:28 EST on 03/06/2025.

Changes to original AIA text

PAGE 3

Portion of Work	**Substantial Completion Date**
N/A	N/A

Item	**Price**
Alternate 1	$19,252.42

Item	**Price**	**Conditions for Acceptance**
N/A	N/A	N/A

Item	**Price**
N/A	N/A

Item	**Units and Limitations**	**Price per Unit ($0.00)**
N/A	N/A	N/A

PAGE 4

§ 5.1.3 Provided that an Application for Payment is received by the Architect not later than the 1st day of a month, and the Contractor obtains Architect's certification of the application for payment within 10 days thereafter, then the Owner shall make payment of the amount certified to the Contractor not later than the 10th day of the following month. If an Application for Payment is received by the Architect after the application date fixed above, and the Contractor obtains Architect's certification of the application for payment within 10 days thereafter, then payment of the amount certified shall be made by the Owner not later than thirty (30) days after the Architect receives the Application for Payment.

§ 5.1.4 Each Application for Payment shall be based on the most recent schedule of values submitted by the Contractor in accordance with the Contract Documents. The schedule of values shall allocate the entire Contract Sum among the various portions of the Work. The schedule of values shall be prepared in such form, and supported by such data to substantiate its accuracy, as the Architect may require. This schedule ~~of values~~, unless objected to by the Architect, shall be used as a basis for reviewing the Contractor's Applications for Payment.

PAGE 5

~~**§ 5.1.7.3** Except as set forth in this Section 5.1.7.3, upon Substantial Completion of the Work, the Contractor may submit an Application for Payment that includes the retainage withheld from prior Applications for Payment~~

Additions and Deletions Report for AIA Document A101 – 2017. Copyright © 1915, 1918, 1925, 1937, 1951, 1958, 1961, 1963, 1967, 1974, 1977, 1987, 1991, 1997, 2007 and 2017. All rights reserved. "The American Institute of Architects," "American Institute of Architects," "AIA," the AIA Logo, and "AIA Contract Documents" are trademarks of The American Institute of Architects. This document was produced at 17:12:28 EST on 03/06/2025 under Subscription No.20240046071 which expires on 08/01/2025, is not for resale, is licensed for one-time use only, and may only be used in accordance with the AIA Contract Documents® Terms of Service. To report copyright violations, e-mail docinfo@aiacontracts.com.
User Notes: (67ca1d54ac1df796e2d60238)

~~pursuant to this Section 5.1.7. The Application for Payment submitted at Substantial Completion shall not include retainage as follows:~~No reduction of retainage below five percent (5%).

§ 5.1.7.3 Ex

~~.%~~ All payments shall be governed by the Local Government Prompt Payment Act as set forth in Sections 218.70 through 218.79, Florida Statutes, as amended.

PAGE 6

~~[ ] Other *(Specify)*~~

. If the Owner and Contractor do not select a method of binding dispute resolution, or do not subsequently agree in writing to a binding dispute resolution method other than litigation, Claims ~~will~~shall be resolved by litigation ~~in a court of competent jurisdiction~~, and shall have its venue located exclusively in the Circiut Court of Volusia County, Florida, and the Parties hereby expressly consent and submit themselves to the personal jurisdiction and venue of the Court.

§ 7.1 The Contract may be terminated by the Owner or the Contractor as provided in Article 14 of AIA Document A201–2017, as modified by the Owner.

§ 7.2 The Work may be suspended by the Owner as provided in Article 14 of AIA Document A201–2017, as modified by the Owner.

PAGE 7

§8.7.1 PUBLIC RECORD COMPLIANCE Contractor shall comply with public records laws as set forth in Section 119, Florida Statutes, and shall specifically: (a) keep and maintain public records that ordinarily and necessarily would be required by the City in order to perform the service; (b) provide the public with access to public records on the same terms and conditions that the City would provide the records at a cost that does not exceed the cost provided in Section 119, Florida Statutes, or as otherwise provided by law; (c) ensure that public records that are exempt or confidential and exempt from public records disclosure requirements are not disclosed except as authorized by law; and (d) meet all requirements for retaining public records and transfer to the City, at no cost, all public records in possession of the Contractor upon termination of the Contract and destroy any duplicate public records that are exempt or confidential and exempt from public records disclosure requirements. All records stored electronically must be provided to the City in a format that is compatible with the information technology systems of the City.

§ 8.7.2 RECORDS

The design, permits and all other records prepared by the Contractor, assembled for the City, subcontracted for the City, and any other records related to the scope of work in the possession of the Contractor shall be retained by the Contractor for the requisite time set forth in Florida Administration Code Rule 1 b-24

http://dos.myflorida.com/library-archives/records-management/**. Contractor may dispose of the records in accordance with Florida law, upon receipt of a signed written release signed by the City Attorney. Contractor agrees to indemnify the City for failure to comply with the requirements of this paragraph including costs of litigation and legal fees incurred through all appeals. City reserves the right to select and approve the defense attorney.**

§ 8.7.3 FORCE MAJEURE

Neither party shall be liable for any delay in performance or failure to perform any obligation hereunder if, and to the extent that, such failure or delay is caused by an event of Force Majeure. Force Majeure shall mean any act, event or condition that is beyond the party's reasonable control, that materially and adversely affects the party's ability to perform its obligations hereunder, and that is not the result of the party's willful neglect, error, omission or failure to exercise reasonable due diligence.

Additions and Deletions Report for AIA Document A101 – 2017. Copyright © 1915, 1918, 1925, 1937, 1951, 1958, 1961, 1963, 1967, 1974, 1977, 1987, 1991, 1997, 2007 and 2017. All rights reserved. "The American Institute of Architects," "American Institute of Architects," "AIA," the AIA Logo, and "AIA Contract Documents" are trademarks of The American Institute of Architects. This document was produced at 17:12:28 EST on 03/06/2025 under Subscription No.20240046071 which expires on 08/01/2025, is not for resale, is licensed for one-time use only, and may only be used in accordance with the AIA Contract Documents® Terms of Service. To report copyright violations, e-mail docinfo@aiacontracts.com.
User Notes: (67ca1d54ac1df796e2d60238)

§ 8.7.4 CONTRACT CONSTRUCTION

This Contract may be executed in one or more counterparts, each of which shall be deemed an original but all of which together constitute one and the same instrument. The delivery by facsimile or e-mail of an executed copy of this Contract shall be deemed valid as if an original signature was delivered. No contract shall be formed between the Contractor and the City until both Parties have signed this Contract.

§ 8.7.5 FINANCIAL DISCLOSURES

During the term of this Contract, Contractor covenants and agrees that it will keep adequate books and records of accounts in accordance with Generally Accepted Accounting Principles (GAAP). Contractor further covenants and agrees that in the event the Contractor becomes insolvent and/or fails to pay its current obligations when they become due, Contractor shall so advise Owner of such situation and, upon request from the Owner, Contractor shall provide to Owner financial statements of Contractor, including current income and expense statements of Contractor, consolidated balance sheets signed by a financial officer of Contractor, and audited reports provided by Contractor to Contractor's Surety, audited financial statements certified by a Certified Public Accountant concerning the financial affairs of the Contractor and all affiliates of Contractor, and such other financial information requested by Owner. All such financial information shall comply with GAAP.

In the event that Contractor becomes insolvent and/or fails to pay its obligations when they become due, Contractor hereby authorized its sureties, lenders, financial institutions and other third parties to release Owner financial information requested by Owner, including, but not limited to, the financial information described in the preceding paragraph.

§ 8.7.6 WAIVER OF JURY TRIAL

All parties hereby waive any and all right to any trial by jury in any action or proceeding arising directly or indirectly hereunder.

.1 AIA Document A201™–2017, General Conditions of the Contract for Construction

.2 AIA Document A101™–2017, Standard Form of Agreement Between Owner and Contractor, as modified by Owner with attached Exhibits "A' through "F," all of which are made a part hereof by this reference.

.23 ~~AIA Document A101™–2017,~~ Exhibit A, Insurance and Bonds~~:~~ AIA Document A101™ 2017

.3 ~~AIA Document A201™–2017, General Conditions of the Contract for Construction~~**4** Exhibit B, ITB 250-02 Construction of Forestry Building

.5 Exhibit C, Contractor's Proposal

.46 ~~Building information modeling exhibit, dated as indicated below:~~Exhibit D, Applications for Payment

~~*(Insert the date of the building information modeling exhibit incorporated into this Agreement.)*~~

.5 ~~Drawings~~**.7** Exhibit E, Forms

.8 Exhibit F, Contractor's Completion Checklist

.9

.9 ITB 25-02 Drawings, Specifications, and Requirements

Additions and Deletions Report for AIA Document A101 – 2017. Copyright © 1915, 1918, 1925, 1937, 1951, 1958, 1961, 1963, 1967, 1974, 1977, 1987, 1991, 1997, 2007 and 2017. All rights reserved. "The American Institute of Architects," "American Institute of Architects," "AIA," the AIA Logo, and "AIA Contract Documents" are trademarks of The American Institute of Architects. This document was produced at 17:12:28 EST on 03/06/2025 under Subscription No.20240046071 which expires on 08/01/2025, is not for resale, is licensed for one-time use only, and may only be used in accordance with the AIA Contract Documents® Terms of Service. To report copyright violations, e-mail docinfo@aiacontracts.com.
User Notes: (67ca1d54ac1df796e2d60238)

PAGE 9

~~Number~~Title	~~Title~~Date	~~Date~~Pages
Attachment "2" – Forestry Management Storage Barn, on file with City Engineer	June 18, 2024	1 – 23
Attachment "3" – Forestry Management Storage Barn Project Manual 100% Construction Documents, on file with City Engineer	June 18, 2024	1 - 74

.6~~10~~ ~~Specifications~~Addenda, if any:

~~Section~~Number	~~Title~~	Date	Pages
Addendum No. 1	January 6, 2025	Page 1	

~~**.7** Addenda, if any:~~

~~**.8** Other Exhibits:~~

~~*(Check all boxes that apply and include appropriate information identifying the exhibit where required.)*~~

~~[ ] AIA Document E204™–2017, Sustainable Projects Exhibit, dated as indicated below:~~

~~*(Insert the date of the E204–2017 incorporated into this Agreement.)*~~

~~[ ] The Sustainability Plan:~~

~~[ ] Supplementary and other Conditions of the Contract:~~

~~**.9** Other documents, if any, listed below:~~

~~*(List here any additional documents that are intended to form part of the Contract Documents. AIA Document A201™–2017 provides that the advertisement or invitation to bid, Instructions to Bidders, sample forms, the Contractor's bid or proposal, portions of Addenda relating to bidding or proposal requirements, and other information furnished by the Owner in anticipation of receiving bids or proposals, are not part of the Contract Documents unless enumerated in this Agreement. Any such documents should be listed here only if intended to be part of the Contract Documents.)*~~

~~This Agreement entered into as of the day and year first written above.~~

This Agreement entered into as of the day and year first written above.

Date:_____

Date:_____

Variable Information

PAGE 1

AGREEMENT made as of the day of in the year 2025

City of Port Orange, a Municipal Corporation

1000 City Center Circle

Additions and Deletions Report for AIA Document A101 – 2017. Copyright © 1915, 1918, 1925, 1937, 1951, 1958, 1961, 1963, 1967, 1974, 1977, 1987, 1991, 1997, 2007 and 2017. All rights reserved. "The American Institute of Architects," "American Institute of Architects," "AIA," the AIA Logo, and "AIA Contract Documents" are trademarks of The American Institute of Architects. This document was produced at 17:12:28 EST on 03/06/2025 under Subscription No.20240046071 which expires on 08/01/2025, is not for resale, is licensed for one-time use only, and may only be used in accordance with the AIA Contract Documents® Terms of Service. To report copyright violations, e-mail docinfo@aiacontracts.com.
User Notes: (67ca1d54ac1df796e2d60238)

Port Orange, Florida 32129

(386) 506-5575

S. A. Casey Construction, Inc.

2822 Commerce Park Drive

Suite 400

Orlando, Florida 32819

ITB 25-02 Construction of Forestry Building

Hall & Ogle Architects, Inc.

208 Magnolia Avenue

Daytona Beach, Florida 32114

PAGE 2

[X] A date set forth in a notice to proceed issued by the Owner.

PAGE 3

[X] By the following date: Contractor shall achieve Substantial Completion of the work not later that 210 days from the issuance of a written Notice to Proceed issued by the City.

Portion of Work	Substantial Completion Date
N/A	N/A

§ 4.1 The Owner shall pay the Contractor the Contract Sum in current funds for the Contractor's performance of the Contract. The Contract Sum shall be Six Hundred Sixty-Eight Thousand Nine Hundred Fourteen and 12/100 Dollars ($ 668,914.12), subject to additions and deductions as provided in the Contract Documents.

Item	Price
Alternate 1	$19,252.42

Item	Price	Conditions for Acceptance
N/A	N/A	N/A

Item	Price
N/A	N/A

Item	Units and Limitations	Price per Unit ($0.00)
N/A	N/A	N/A

0.00

Additions and Deletions Report for AIA Document A101 – 2017. Copyright © 1915, 1918, 1925, 1937, 1951, 1958, 1961, 1963, 1967, 1974, 1977, 1987, 1991, 1997, 2007 and 2017. All rights reserved. "The American Institute of Architects," "American Institute of Architects," "AIA," the AIA Logo, and "AIA Contract Documents" are trademarks of The American Institute of Architects. This document was produced at 17:12:28 EST on 03/06/2025 under Subscription No.20240046071 which expires on 08/01/2025, is not for resale, is licensed for one-time use only, and may only be used in accordance with the AIA Contract Documents® Terms of Service. To report copyright violations, e-mail docinfo@aiacontracts.com.
User Notes: (67ca1d54ac1df796e2d60238)

PAGE 4

§ 5.1.3 Provided that an Application for Payment is received by the Architect not later than the 1st day of a month, and the Contractor obtains Architect's certification of the application for payment within 10 days thereafter, then the Owner shall make payment of the amount certified to the Contractor not later than the 10th day of the following month. If an Application for Payment is received by the Architect after the application date fixed above, and the Contractor obtains Architect's certification of the application for payment within 10 days thereafter, then payment of the amount certified shall be made by the Owner not later than thirty (30) days after the Architect receives the Application for Payment.

PAGE 5

~~**§ 5.1.7.3** Except as set forth in this Section 5.1.7.3, upon Substantial Completion of the Work, the Contractor may submit an Application for Payment that includes the retainage withheld from prior Applications for Payment pursuant to this Section 5.1.7. The Application for Payment submitted at Substantial Completion shall not include retainage as follows:~~No reduction of retainage below five percent (5%).

Deleted in its entirety.

~~%~~ All payments shall be governed by the Local Government Prompt Payment Act as set forth in Sections 218.70 through 218.79, Florida Statutes, as amended.

PAGE 6

Architect's actions, subject to recommendation to Owner, and Owner approval prior to action.

[X] Litigation in a court of competent jurisdiction

Junos Reed, City Engineer

1000 City Center Circle

Port Orange, Florida 32129

jureed@port-orange.org

(386) 506-5751

PAGE 7

S. A. Casey Construction, Inc.

2822 Commerce Park Drive

Suite 400

Orlando, Florida 32819

jcasey@sacaseyconstruction.com

(407) 240-6775

PAGE 9

Additions and Deletions Report for AIA Document A101 – 2017. Copyright © 1915, 1918, 1925, 1937, 1951, 1958, 1961, 1963, 1967, 1974, 1977, 1987, 1991, 1997, 2007 and 2017. All rights reserved. "The American Institute of Architects," "American Institute of Architects," "AIA," the AIA Logo, and "AIA Contract Documents" are trademarks of The American Institute of Architects. This document was produced at 17:12:28 EST on 03/06/2025 under Subscription No.20240046071 which expires on 08/01/2025, is not for resale, is licensed for one-time use only, and may only be used in accordance with the AIA Contract Documents® Terms of Service. To report copyright violations, e-mail docinfo@aiacontracts.com.
User Notes: (67ca1d54ac1df796e2d60238)

~~Section~~Number	~~Title~~	Date	Pages
Addendum No. 1	January 6, 2025	Page 1	

Additions and Deletions Report for AIA Document A101 – 2017. Copyright © 1915, 1918, 1925, 1937, 1951, 1958, 1961, 1963, 1967, 1974, 1977, 1987, 1991, 1997, 2007 and 2017. All rights reserved. “The American Institute of Architects,” “American Institute of Architects,” “AIA,” the AIA Logo, and “AIA Contract Documents” are trademarks of The American Institute of Architects. This document was produced at 17:12:28 EST on 03/06/2025 under Subscription No.20240046071 which expires on 08/01/2025, is not for resale, is licensed for one-time use only, and may only be used in accordance with the AIA Contract Documents® Terms of Service. To report copyright violations, e-mail docinfo@aiacontracts.com.
User Notes: (67ca1d54ac1df796e2d60238)

Certification of Document's Authenticity

AIA® Document D401™ – 2003

I, Shannon K. Balmer, Senior Assistant City Attorney, hereby certify, to the best of my knowledge, information and belief, that I created the attached final document simultaneously with its associated Additions and Deletions Report and this certification at 17:12:28 EST on 03/06/2025 under Order No. 20240046071 from AIA Contract Documents software and that in preparing the attached final document I made no changes to the original text of AIA® Document A101™ - 2017, Standard Form of Agreement Between Owner and Contractor where the basis of payment is a Stipulated Sum, other than those additions and deletions shown in the associated Additions and Deletions Report.

_____

(Signed)

_____

(Title)

_____

(Dated)

AIA Document D401 – 2003. Copyright © 1992 and 2003. All rights reserved. "The American Institute of Architects," "American Institute of Architects," "AIA," the AIA Logo, and "AIA Contract Documents" are trademarks of The American Institute of Architects. This document was produced at 17:12:28 EST on 03/06/2025 under Order No.20240046071 which expires on 08/01/2025, is not for resale, is licensed for one-time use only, and may only be used in accordance with the AIA Contract Documents® Terms of Service. To report copyright violations, e-mail docinfo@aiacontracts.com.
User Notes: (67ca1d54ac1df796e2d60238)

AIA® Document A201® – 2017

General Conditions of the Contract for Construction

for the following PROJECT:
(Name and location or address)

ITB 25-02 Construction of Forestry Building

ADDITIONS AND DELETIONS:
The author of this document may have revised the text of the original AIA standard form. An *Additions and Deletions Report* that notes revisions to the standard form text is available from the author and should be reviewed. A vertical line in the left margin of this document indicates where the author has added to or deleted from the original AIA text.

This document has important legal consequences. Consultation with an attorney is encouraged with respect to its completion or modification.

For guidance in modifying this document to include supplementary conditions, see AIA Document A503™–2017, Guide for Supplementary Conditions.

AIA Document A201 – 2017. Copyright © 1911, 1915, 1918, 1925, 1937, 1951, 1958, 1961, 1963, 1966, 1970, 1976, 1987, 1997, 2007 and 2017. All rights reserved. "The American Institute of Architects," "American Institute of Architects," "AIA," the AIA Logo, and "AIA Contract Documents" are trademarks of The American Institute of Architects. This document was produced at 16:23:08 EST on 03/06/2025 under Subscription No.20240046071 which expires on 08/01/2025, is not for resale, is licensed for one-time use only, and may only be used in accordance with the AIA Contract Documents® Terms of Service. To report copyright violations, e-mail docinfo@aiacontracts.com.
User Notes: (67ca1160ac1df796e2d601b8)

2401 Bear Trail, Port Orange, Florida 32128

THE OWNER:
(Name, legal status and address)

City of Port Orange, a Municipal Corporation
1000 City Center Circle, Port Orange, Florida 32129

THE ARCHITECT:
(Name, legal status and address)

Hall & Ogle Architects, Inc.
208 Magnolia Avenue, Daytona Beach, Florida 32114

TABLE OF ARTICLES

1 GENERAL PROVISIONS

2 OWNER

3 CONTRACTOR

4 ARCHITECT

5 SUBCONTRACTORS

6 CONSTRUCTION BY OWNER OR BY SEPARATE CONTRACTORS

7 CHANGES IN THE WORK

8 TIME

9 PAYMENTS AND COMPLETION

10 PROTECTION OF PERSONS AND PROPERTY

11 INSURANCE AND BONDS

12 UNCOVERING AND CORRECTION OF WORK

13 MISCELLANEOUS PROVISIONS

14 TERMINATION OR SUSPENSION OF THE CONTRACT

15 CLAIMS AND DISPUTES

AIA Document A201 – 2017. Copyright © 1911, 1915, 1918, 1925, 1937, 1951, 1958, 1961, 1963, 1966, 1970, 1976, 1987, 1997, 2007 and 2017. All rights reserved. "The American Institute of Architects," "American Institute of Architects," "AIA," the AIA Logo, and "AIA Contract Documents" are trademarks of The American Institute of Architects. This document was produced at 16:23:08 EST on 03/06/2025 under Subscription No.20240046071 which expires on 08/01/2025, is not for resale, is licensed for one-time use only, and may only be used in accordance with the AIA Contract Documents® Terms of Service. To report copyright violations, e-mail docinfo@aiacontracts.com.
User Notes: (67ca1160ac1df796e2d601b8)

INDEX
(Topics and numbers in bold are Section headings.)

Acceptance of Nonconforming Work
9.6.6, 9.9.3, **12.3**
Acceptance of Work
9.6.6, 9.8.2, 9.9.3, 9.10.1, 9.10.3, 12.3
Access to Work
3.16, 6.2.1, 12.1
Accident Prevention
10
Acts and Omissions
3.2, 3.3.2, 3.12.8, 3.18, 4.2.3, 8.3.1, 9.5.1, 10.2.5, 10.2.8, 13.3.2, 14.1, 15.1.2, 15.2
Addenda
1.1.1
Additional Costs, Claims for
3.7.4, 3.7.5, 10.3.2, 15.1.5
Additional Inspections and Testing
9.4.2, 9.8.3, 12.2.1, **13.4**
Additional Time, Claims for
3.2.4, 3.7.4, 3.7.5, 3.10.2, 8.3.2, **15.1.6**
Administration of the Contract
3.1.3, **4.2**, 9.4, 9.5
Advertisement or Invitation to Bid
1.1.1
Aesthetic Effect
4.2.13
Allowances
3.8
Applications for Payment
4.2.5, 7.3.9, 9.2, **9.3**, 9.4, 9.5.1, 9.5.4, 9.6.3, 9.7, 9.10
Approvals
2.1.1, 2.3.1, 2.5, 3.1.3, 3.10.2, 3.12.8, 3.12.9, 3.12.10.1, 4.2.7, 9.3.2, 13.4.1
Arbitration
8.3.1, 15.3.2, **15.4**
ARCHITECT
4
Architect, Definition of
4.1.1
Architect, Extent of Authority
2.5, 3.12.7, 4.1.2, 4.2, 5.2, 6.3, 7.1.2, 7.3.4, 7.4, 9.2, 9.3.1, 9.4, 9.5, 9.6.3, 9.8, 9.10.1, 9.10.3, 12.1, 12.2.1, 13.4.1, 13.4.2, 14.2.2, 14.2.4, 15.1.4, 15.2.1
Architect, Limitations of Authority and Responsibility
2.1.1, 3.12.4, 3.12.8, 3.12.10, 4.1.2, 4.2.1, 4.2.2, 4.2.3, 4.2.6, 4.2.7, 4.2.10, 4.2.12, 4.2.13, 5.2.1, 7.4, 9.4.2, 9.5.4, 9.6.4, 15.1.4, 15.2
Architect's Additional Services and Expenses
2.5, 12.2.1, 13.4.2, 13.4.3, 14.2.4
Architect's Administration of the Contract
3.1.3, 3.7.4, 15.2, 9.4.1, 9.5
Architect's Approvals
2.5, 3.1.3, 3.5, 3.10.2, 4.2.7
Architect's Authority to Reject Work
3.5, 4.2.6, 12.1.2, 12.2.1

AIA Document A201 – 2017. Copyright © 1911, 1915, 1918, 1925, 1937, 1951, 1958, 1961, 1963, 1966, 1970, 1976, 1987, 1997, 2007 and 2017. All rights reserved. "The American Institute of Architects," "American Institute of Architects," "AIA," the AIA Logo, and "AIA Contract Documents" are trademarks of The American Institute of Architects. This document was produced at 16:23:08 EST on 03/06/2025 under Subscription No.20240046071 which expires on 08/01/2025, is not for resale, is licensed for one-time use only, and may only be used in accordance with the AIA Contract Documents® Terms of Service. To report copyright violations, e-mail docinfo@aiacontracts.com.
User Notes: (67ca1160ac1df796e2d601b8)

Architect's Copyright
1.1.7, 1.5
Architect's Decisions
3.7.4, 4.2.6, 4.2.7, 4.2.11, 4.2.12, 4.2.13, 4.2.14, 6.3, 7.3.4, 7.3.9, 8.1.3, 8.3.1, 9.2, 9.4.1, 9.5, 9.8.4, 9.9.1, 13.4.2, 15.2
Architect's Inspections
3.7.4, 4.2.2, 4.2.9, 9.4.2, 9.8.3, 9.9.2, 9.10.1, 13.4
Architect's Instructions
3.2.4, 3.3.1, 4.2.6, 4.2.7, 13.4.2
Architect's Interpretations
4.2.11, 4.2.12
Architect's Project Representative
4.2.10
Architect's Relationship with Contractor
1.1.2, 1.5, 2.3.3, 3.1.3, 3.2.2, 3.2.3, 3.2.4, 3.3.1, 3.4.2, 3.5, 3.7.4, 3.7.5, 3.9.2, 3.9.3, 3.10, 3.11, 3.12, 3.16, 3.18, 4.1.2, 4.2, 5.2, 6.2.2, 7, 8.3.1, 9.2, 9.3, 9.4, 9.5, 9.7, 9.8, 9.9, 10.2.6, 10.3, 11.3, 12, 13.3.2, 13.4, 15.2
Architect's Relationship with Subcontractors
1.1.2, 4.2.3, 4.2.4, 4.2.6, 9.6.3, 9.6.4, 11.3
Architect's Representations
9.4.2, 9.5.1, 9.10.1
Architect's Site Visits
3.7.4, 4.2.2, 4.2.9, 9.4.2, 9.5.1, 9.9.2, 9.10.1, 13.4
Asbestos
10.3.1
Attorneys' Fees
3.18.1, 9.6.8, 9.10.2, 10.3.3
Award of Separate Contracts
6.1.1, 6.1.2
Award of Subcontracts and Other Contracts for Portions of the Work
5.2
Basic Definitions
1.1
Bidding Requirements
1.1.1
Binding Dispute Resolution
8.3.1, 9.7, 11.5, 13.1, 15.1.2, 15.1.3, 15.2.1, 15.2.5, 15.2.6.1, 15.3.1, 15.3.2, 15.3.3, 15.4.1
Bonds, Lien
7.3.4.4, 9.6.8, 9.10.2, 9.10.3
Bonds, Performance, and Payment
7.3.4.4, 9.6.7, 9.10.3, **11.1.2**, 11.1.3, **11.5**
Building Information Models Use and Reliance
1.8
Building Permit
3.7.1
Capitalization
1.3
Certificate of Substantial Completion
9.8.3, 9.8.4, 9.8.5
Certificates for Payment
4.2.1, 4.2.5, 4.2.9, 9.3.3, **9.4**, 9.5, 9.6.1, 9.6.6, 9.7, 9.10.1, 9.10.3, 14.1.1.3, 14.2.4, 15.1.4
Certificates of Inspection, Testing or Approval
13.4.4
Certificates of Insurance
9.10.2

AIA Document A201 – 2017. Copyright © 1911, 1915, 1918, 1925, 1937, 1951, 1958, 1961, 1963, 1966, 1970, 1976, 1987, 1997, 2007 and 2017. All rights reserved. "The American Institute of Architects," "American Institute of Architects," "AIA," the AIA Logo, and "AIA Contract Documents" are trademarks of The American Institute of Architects. This document was produced at 16:23:08 EST on 03/06/2025 under Subscription No.20240046071 which expires on 08/01/2025, is not for resale, is licensed for one-time use only, and may only be used in accordance with the AIA Contract Documents® Terms of Service. To report copyright violations, e-mail docinfo@aiacontracts.com.
User Notes: (67ca1160ac1df796e2d601b8)

Change Orders
1.1.1, 3.4.2, 3.7.4, 3.8.2.3, 3.11, 3.12.8, 4.2.8, 5.2.3, 7.1.2, 7.1.3, **7.2**, 7.3.2, 7.3.7, 7.3.9, 7.3.10, 8.3.1, 9.3.1.1, 9.10.3, 10.3.2, 11.2, 11.5, 12.1.2
Change Orders, Definition of
7.2.1
CHANGES IN THE WORK
2.2.2, 3.11, 4.2.8, **7**, 7.2.1, 7.3.1, 7.4, 8.3.1, 9.3.1.1, 11.5
Claims, Definition of
15.1.1
Claims, Notice of
1.6.2, 15.1.3
CLAIMS AND DISPUTES
3.2.4, 6.1.1, 6.3, 7.3.9, 9.3.3, 9.10.4, 10.3.3, **15**, 15.4
Claims and Timely Assertion of Claims
15.4.1
Claims for Additional Cost
3.2.4, 3.3.1, 3.7.4, 7.3.9, 9.5.2, 10.2.5, 10.3.2, **15.1.5**
Claims for Additional Time
3.2.4, 3.3.1, 3.7.4, 6.1.1, 8.3.2, 9.5.2, 10.3.2, **15.1.6**
Concealed or Unknown Conditions, Claims for
3.7.4
Claims for Damages
3.2.4, 3.18, 8.3.3, 9.5.1, 9.6.7, 10.2.5, 10.3.3, 11.3, 11.3.2, 14.2.4, 15.1.7
Claims Subject to Arbitration
15.4.1
Cleaning Up
3.15, 6.3
Commencement of the Work, Conditions Relating to
2.2.1, 3.2.2, 3.4.1, 3.7.1, 3.10.1, 3.12.6, 5.2.1, 5.2.3, 6.2.2, 8.1.2, 8.2.2, 8.3.1, 11.1, 11.2, **15.1.5**
Commencement of the Work, Definition of
8.1.2
Communications
3.9.1, **4.2.4**
Completion, Conditions Relating to
3.4.1, 3.11, 3.15, 4.2.2, 4.2.9, 8.2, 9.4.2, 9.8, 9.9.1, 9.10, 12.2, 14.1.2, 15.1.2
COMPLETION, PAYMENTS AND
9
Completion, Substantial
3.10.1, 4.2.9, 8.1.1, 8.1.3, 8.2.3, 9.4.2, 9.8, 9.9.1, 9.10.3, 12.2, 15.1.2
Compliance with Laws
2.3.2, 3.2.3, 3.6, 3.7, 3.12.10, 3.13, 9.6.4, 10.2.2, 13.1, 13.3, 13.4.1, 13.4.2, 13.5, 14.1.1, 14.2.1.3, 15.2.8, 15.4.2, 15.4.3
Concealed or Unknown Conditions
3.7.4, 4.2.8, 8.3.1, 10.3
Conditions of the Contract
1.1.1, 6.1.1, 6.1.4
Consent, Written
3.4.2, 3.14.2, 4.1.2, 9.8.5, 9.9.1, 9.10.2, 9.10.3, 13.2, 15.4.4.2
Consolidation or Joinder
15.4.4
CONSTRUCTION BY OWNER OR BY SEPARATE CONTRACTORS
1.1.4, **6**
Construction Change Directive, Definition of
7.3.1
Construction Change Directives

AIA Document A201 – 2017. Copyright © 1911, 1915, 1918, 1925, 1937, 1951, 1958, 1961, 1963, 1966, 1970, 1976, 1987, 1997, 2007 and 2017. All rights reserved. "The American Institute of Architects," "American Institute of Architects," "AIA," the AIA Logo, and "AIA Contract Documents" are trademarks of The American Institute of Architects. This document was produced at 16:23:08 EST on 03/06/2025 under Subscription No.20240046071 which expires on 08/01/2025, is not for resale, is licensed for one-time use only, and may only be used in accordance with the AIA Contract Documents® Terms of Service. To report copyright violations, e-mail docinfo@aiacontracts.com.
User Notes: (67ca1160ac1df796e2d601b8)

1.1.1, 3.4.2, 3.11, 3.12.8, 4.2.8, 7.1.1, 7.1.2, 7.1.3, **7.3**, 9.3.1.1
Construction Schedules, Contractor's
3.10, 3.11, 3.12.1, 3.12.2, 6.1.3, 15.1.6.2
Contingent Assignment of Subcontracts
5.4, 14.2.2.2
Continuing Contract Performance
15.1.4
Contract, Definition of
1.1.2
CONTRACT, TERMINATION OR SUSPENSION OF THE
5.4.1.1, 5.4.2, 11.5, **14**
Contract Administration
3.1.3, 4, 9.4, 9.5
Contract Award and Execution, Conditions Relating to
3.7.1, 3.10, 5.2, 6.1
Contract Documents, Copies Furnished and Use of
1.5.2, 2.3.6, 5.3
Contract Documents, Definition of
1.1.1
Contract Sum
2.2.2, 2.2.4, 3.7.4, 3.7.5, 3.8, 3.10.2, 5.2.3, 7.3, 7.4, **9.1**, 9.2, 9.4.2, 9.5.1.4, 9.6.7, 9.7, 10.3.2, 11.5, 12.1.2, 12.3, 14.2.4, 14.3.2, 15.1.4.2, **15.1.5, 15.2.5**
Contract Sum, Definition of
9.1
Contract Time
1.1.4, 2.2.1, 2.2.2, 3.7.4, 3.7.5, 3.10.2, 5.2.3, 6.1.5, 7.2.1.3, 7.3.1, 7.3.5, 7.3.6, 7, 7, 7.3.10, 7.4, 8.1.1, 8.2.1, 8.2.3, 8.3.1, 9.5.1, 9.7, 10.3.2, 12.1.1, 12.1.2, 14.3.2, 15.1.4.2, 15.1.6.1, 15.2.5
Contract Time, Definition of
8.1.1
CONTRACTOR
3
Contractor, Definition of
3.1, 6.1.2
Contractor's Construction and Submittal Schedules
3.10, 3.12.1, 3.12.2, 4.2.3, 6.1.3, 15.1.6.2
Contractor's Employees
2.2.4, 3.3.2, 3.4.3, 3.8.1, 3.9, 3.18.2, 4.2.3, 4.2.6, 10.2, 10.3, 11.3, 14.1, 14.2.1.1
Contractor's Liability Insurance
11.1
Contractor's Relationship with Separate Contractors and Owner's Forces
3.12.5, 3.14.2, 4.2.4, 6, 11.3, 12.2.4
Contractor's Relationship with Subcontractors
1.2.2, 2.2.4, 3.3.2, 3.18.1, 3.18.2, 4.2.4, 5, 9.6.2, 9.6.7, 9.10.2, 11.2, 11.3, 11.4
Contractor's Relationship with the Architect
1.1.2, 1.5, 2.3.3, 3.1.3, 3.2.2, 3.2.3, 3.2.4, 3.3.1, 3.4.2, 3.5.1, 3.7.4, 3.10, 3.11, 3.12, 3.16, 3.18, 4.2, 5.2, 6.2.2, 7, 8.3.1, 9.2, 9.3, 9.4, 9.5, 9.7, 9.8, 9.9, 10.2.6, 10.3, 11.3, 12, 13.4, 15.1.3, 15.2.1
Contractor's Representations
3.2.1, 3.2.2, 3.5, 3.12.6, 6.2.2, 8.2.1, 9.3.3, 9.8.2
Contractor's Responsibility for Those Performing the Work
3.3.2, 3.18, 5.3, 6.1.3, 6.2, 9.5.1, 10.2.8
Contractor's Review of Contract Documents
3.2
Contractor's Right to Stop the Work
2.2.2, 9.7
Contractor's Right to Terminate the Contract
14.1

AIA Document A201 – 2017. Copyright © 1911, 1915, 1918, 1925, 1937, 1951, 1958, 1961, 1963, 1966, 1970, 1976, 1987, 1997, 2007 and 2017. All rights reserved. "The American Institute of Architects," "American Institute of Architects," "AIA," the AIA Logo, and "AIA Contract Documents" are trademarks of The American Institute of Architects. This document was produced at 16:23:08 EST on 03/06/2025 under Subscription No.20240046071 which expires on 08/01/2025, is not for resale, is licensed for one-time use only, and may only be used in accordance with the AIA Contract Documents® Terms of Service. To report copyright violations, e-mail docinfo@aiacontracts.com.
User Notes: (67ca1160ac1df796e2d601b8)

Contractor's Submittals
3.10, 3.11, 3.12, 4.2.7, 5.2.1, 5.2.3, 9.2, 9.3, 9.8.2, 9.8.3, 9.9.1, 9.10.2, 9.10.3
Contractor's Superintendent
3.9, 10.2.6
Contractor's Supervision and Construction Procedures
1.2.2, 3.3, 3.4, 3.12.10, 4.2.2, 4.2.7, 6.1.3, 6.2.4, 7.1.3, 7.3.4, 7.3.6, 8.2, 10, 12, 14, 15.1.4
Coordination and Correlation
1.2, 3.2.1, 3.3.1, 3.10, 3.12.6, 6.1.3, 6.2.1
Copies Furnished of Drawings and Specifications
1.5, 2.3.6, 3.11
Copyrights
1.5, **3.17**
Correction of Work
2.5, 3.7.3, 9.4.2, 9.8.2, 9.8.3, 9.9.1, 12.1.2, **12.2**, 12.3, 15.1.3.1, 15.1.3.2, 15.2.1
Correlation and Intent of the Contract Documents
1.2
Cost, Definition of
7.3.4
Costs
2.5, 3.2.4, 3.7.3, 3.8.2, 3.15.2, 5.4.2, 6.1.1, 6.2.3, 7.3.3.3, 7.3.4, 7.3.8, 7.3.9, 9.10.2, 10.3.2, 10.3.6, 11.2, 12.1.2, 12.2.1, 12.2.4, 13.4, 14
Cutting and Patching
3.14, 6.2.5
Damage to Construction of Owner or Separate Contractors
3.14.2, 6.2.4, 10.2.1.2, 10.2.5, 10.4, 12.2.4
Damage to the Work
3.14.2, 9.9.1, 10.2.1.2, 10.2.5, 10.4, 12.2.4
Damages, Claims for
3.2.4, 3.18, 6.1.1, 8.3.3, 9.5.1, 9.6.7, 10.3.3, 11.3.2, 11.3, 14.2.4, 15.1.7
Damages for Delay
6.2.3, 8.3.3, 9.5.1.6, 9.7, 10.3.2, 14.3.2
Date of Commencement of the Work, Definition of
8.1.2
Date of Substantial Completion, Definition of
8.1.3
Day, Definition of
8.1.4
Decisions of the Architect
3.7.4, 4.2.6, 4.2.7, 4.2.11, 4.2.12, 4.2.13, 6.3, 7.3.4, 7.3.9, 8.1.3, 8.3.1, 9.2, 9.4, 9.5.1, 9.8.4, 9.9.1, 13.4.2, 14.2.2, 14.2.4, 15.1, 15.2
Decisions to Withhold Certification
9.4.1, **9.5**, 9.7, 14.1.1.3
Defective or Nonconforming Work, Acceptance, Rejection and Correction of
2.5, 3.5, 4.2.6, 6.2.3, 9.5.1, 9.5.3, 9.6.6, 9.8.2, 9.9.3, 9.10.4, 12.2.1
Definitions
1.1, 2.1.1, 3.1.1, 3.5, 3.12.1, 3.12.2, 3.12.3, 4.1.1, 5.1, 6.1.2, 7.2.1, 7.3.1, 8.1, 9.1, 9.8.1, 15.1.1
Delays and Extensions of Time
3.2, **3.7.4**, 5.2.3, 7.2.1, 7.3.1, **7.4**, **8.3**, 9.5.1, **9.7**, 10.3.2, **10.4**, 14.3.2, **15.1.6**, 15.2.5
Digital Data Use and Transmission
1.7
Disputes
6.3, 7.3.9, 15.1, 15.2
Documents and Samples at the Site
3.11
Drawings, Definition of

AIA Document A201 – 2017. Copyright © 1911, 1915, 1918, 1925, 1937, 1951, 1958, 1961, 1963, 1966, 1970, 1976, 1987, 1997, 2007 and 2017. All rights reserved. "The American Institute of Architects," "American Institute of Architects," "AIA," the AIA Logo, and "AIA Contract Documents" are trademarks of The American Institute of Architects. This document was produced at 16:23:08 EST on 03/06/2025 under Subscription No.20240046071 which expires on 08/01/2025, is not for resale, is licensed for one-time use only, and may only be used in accordance with the AIA Contract Documents® Terms of Service. To report copyright violations, e-mail docinfo@aiacontracts.com.
User Notes: (67ca1160ac1df796e2d601b8)

1.1.5
Drawings and Specifications, Use and Ownership of
3.11
Effective Date of Insurance
8.2.2
Emergencies
10.4, 14.1.1.2, **15.1.5**
Employees, Contractor's
3.3.2, 3.4.3, 3.8.1, 3.9, 3.18.2, 4.2.3, 4.2.6, 10.2, 10.3.3, 11.3, 14.1, 14.2.1.1
Equipment, Labor, or Materials
1.1.3, 1.1.6, 3.4, 3.5, 3.8.2, 3.8.3, 3.12, 3.13, 3.15.1, 4.2.6, 4.2.7, 5.2.1, 6.2.1, 7.3.4, 9.3.2, 9.3.3, 9.5.1.3, 9.10.2, 10.2.1, 10.2.4, 14.2.1.1, 14.2.1.2
Execution and Progress of the Work
1.1.3, 1.2.1, 1.2.2, 2.3.4, 2.3.6, 3.1, 3.3.1, 3.4.1, 3.7.1, 3.10.1, 3.12, 3.14, 4.2, 6.2.2, 7.1.3, 7.3.6, 8.2, 9.5.1, 9.9.1, 10.2, 10.3, 12.1, 12.2, 14.2, 14.3.1, 15.1.4
Extensions of Time
3.2.4, 3.7.4, 5.2.3, 7.2.1, 7.3, 7.4, 9.5.1, 9.7, 10.3.2, 10.4, 14.3, 15.1.6, **15.2.5**
Failure of Payment
9.5.1.3, **9.7**, 9.10.2, 13.5, 14.1.1.3, 14.2.1.2
Faulty Work
(See Defective or Nonconforming Work)
Final Completion and Final Payment
4.2.1, 4.2.9, 9.8.2, **9.10**, 12.3, 14.2.4, 14.4.3
Financial Arrangements, Owner's
2.2.1, 13.2.2, 14.1.1.4
GENERAL PROVISIONS
1
Governing Law
13.1
Guarantees (See Warranty)
Hazardous Materials and Substances
10.2.4, **10.3**
Identification of Subcontractors and Suppliers
5.2.1
Indemnification
3.17, **3.18**, 9.6.8, 9.10.2, 10.3.3, 11.3
Information and Services Required of the Owner
2.1.2, **2.2**, 2.3, 3.2.2, 3.12.10.1, 6.1.3, 6.1.4, 6.2.5, 9.6.1, 9.9.2, 9.10.3, 10.3.3, 11.2, 13.4.1, 13.4.2, 14.1.1.4, 14.1.4, 15.1.4
Initial Decision
15.2
Initial Decision Maker, Definition of
1.1.8
Initial Decision Maker, Decisions
14.2.4, 15.1.4.2, 15.2.1, 15.2.2, 15.2.3, 15.2.4, 15.2.5
Initial Decision Maker, Extent of Authority
14.2.4, 15.1.4.2, 15.2.1, 15.2.2, 15.2.3, 15.2.4, 15.2.5
Injury or Damage to Person or Property
10.2.8, 10.4
Inspections
3.1.3, 3.3.3, 3.7.1, 4.2.2, 4.2.6, 4.2.9, 9.4.2, 9.8.3, 9.9.2, 9.10.1, 12.2.1, 13.4
Instructions to Bidders
1.1.1
Instructions to the Contractor
3.2.4, 3.3.1, 3.8.1, 5.2.1, 7, 8.2.2, 12, 13.4.2

AIA Document A201 – 2017. Copyright © 1911, 1915, 1918, 1925, 1937, 1951, 1958, 1961, 1963, 1966, 1970, 1976, 1987, 1997, 2007 and 2017. All rights reserved. "The American Institute of Architects," "American Institute of Architects," "AIA," the AIA Logo, and "AIA Contract Documents" are trademarks of The American Institute of Architects. This document was produced at 16:23:08 EST on 03/06/2025 under Subscription No.20240046071 which expires on 08/01/2025, is not for resale, is licensed for one-time use only, and may only be used in accordance with the AIA Contract Documents® Terms of Service. To report copyright violations, e-mail docinfo@aiacontracts.com.
User Notes: (67ca1160ac1df796e2d601b8)

Instruments of Service, Definition of
1.1.7
Insurance
6.1.1, 7.3.4, 8.2.2, 9.3.2, 9.8.4, 9.9.1, 9.10.2, 10.2.5, **11**
Insurance, Notice of Cancellation or Expiration
11.1.4, 11.2.3
Insurance, Contractor's Liability
11.1
Insurance, Effective Date of
8.2.2, 14.4.2
Insurance, Owner's Liability
11.2
Insurance, Property
10.2.5, 11.2, 11.4, 11.5
Insurance, Stored Materials
9.3.2
INSURANCE AND BONDS
11
Insurance Companies, Consent to Partial Occupancy
9.9.1
Insured loss, Adjustment and Settlement of
11.5
Intent of the Contract Documents
1.2.1, 4.2.7, 4.2.12, 4.2.13
Interest
13.5
Interpretation
1.1.8, 1.2.3, **1.4**, 4.1.1, 5.1, 6.1.2, 15.1.1
Interpretations, Written
4.2.11, 4.2.12
Judgment on Final Award
15.4.2
Labor and Materials, Equipment
1.1.3, 1.1.6, **3.4**, 3.5, 3.8.2, 3.8.3, 3.12, 3.13, 3.15.1, 5.2.1, 6.2.1, 7.3.4, 9.3.2, 9.3.3, 9.5.1.3, 9.10.2, 10.2.1, 10.2.4, 14.2.1.1, 14.2.1.2
Labor Disputes
8.3.1
Laws and Regulations
1.5, 2.3.2, 3.2.3, 3.2.4, 3.6, 3.7, 3.12.10, 3.13, 9.6.4, 9.9.1, 10.2.2, 13.1, 13.3.1, 13.4.2, 13.5, 14, 15.2.8, 15.4
Liens
2.1.2, 9.3.1, 9.3.3, 9.6.8, 9.10.2, 9.10.4, 15.2.8
Limitations, Statutes of
12.2.5, 15.1.2, 15.4.1.1
Limitations of Liability
3.2.2, 3.5, 3.12.10, 3.12.10.1, 3.17, 3.18.1, 4.2.6, 4.2.7, 6.2.2, 9.4.2, 9.6.4, 9.6.7, 9.6.8, 10.2.5, 10.3.3, 11.3, 12.2.5, 13.3.1
Limitations of Time
2.1.2, 2.2, 2.5, 3.2.2, 3.10, 3.11, 3.12.5, 3.15.1, 4.2.7, 5.2, 5.3, 5.4.1, 6.2.4, 7.3, 7.4, 8.2, 9.2, 9.3.1, 9.3.3, 9.4.1, 9.5, 9.6, 9.7, 9.8, 9.9, 9.10, 12.2, 13.4, 14, 15, 15.1.2, 15.1.3, 15.1.5
Materials, Hazardous
10.2.4, **10.3**
Materials, Labor, Equipment and
1.1.3, 1.1.6, 3.4.1, 3.5, 3.8.2, 3.8.3, 3.12, 3.13, 3.15.1, 5.2.1, 6.2.1, 7.3.4, 9.3.2, 9.3.3, 9.5.1.3, 9.10.2, 10.2.1.2, 10.2.4, 14.2.1.1, 14.2.1.2
Means, Methods, Techniques, Sequences and Procedures of Construction
3.3.1, 3.12.10, 4.2.2, 4.2.7, 9.4.2

AIA Document A201 – 2017. Copyright © 1911, 1915, 1918, 1925, 1937, 1951, 1958, 1961, 1963, 1966, 1970, 1976, 1987, 1997, 2007 and 2017. All rights reserved. "The American Institute of Architects," "American Institute of Architects," "AIA," the AIA Logo, and "AIA Contract Documents" are trademarks of The American Institute of Architects. This document was produced at 16:23:08 EST on 03/06/2025 under Subscription No.20240046071 which expires on 08/01/2025, is not for resale, is licensed for one-time use only, and may only be used in accordance with the AIA Contract Documents® Terms of Service. To report copyright violations, e-mail docinfo@aiacontracts.com.
User Notes: (67ca1160ac1df796e2d601b8)

Mechanic's Lien
2.1.2, 9.3.1, 9.3.3, 9.6.8, 9.10.2, 9.10.4, 15.2.8
Mediation
8.3.1, 15.1.3.2, 15.2.1, 15.2.5, 15.2.6, **15.3**, 15.4.1, 15.4.1.1
Minor Changes in the Work
1.1.1, 3.4.2, 3.12.8, 4.2.8, 7.1, **7.4**
MISCELLANEOUS PROVISIONS
13
Modifications, Definition of
1.1.1
Modifications to the Contract
1.1.1, 1.1.2, 2.5, 3.11, 4.1.2, 4.2.1, 5.2.3, 7, 8.3.1, 9.7, 10.3.2
Mutual Responsibility
6.2
Nonconforming Work, Acceptance of
9.6.6, 9.9.3, **12.3**
Nonconforming Work, Rejection and Correction of
2.4, 2.5, 3.5, 4.2.6, 6.2.4, 9.5.1, 9.8.2, 9.9.3, 9.10.4, 12.2
Notice
1.6, 1.6.1, 1.6.2, 2.1.2, 2.2.2., 2.2.3, 2.2.4, 2.5, 3.2.4, 3.3.1, 3.7.4, 3.7.5, 3.9.2, 3.12.9, 3.12.10, 5.2.1, 7.4, 8.2.2
9.6.8, 9.7, 9.10.1, 10.2.8, 10.3.2, 11.5, 12.2.2.1, 13.4.1, 13.4.2, 14.1, 14.2.2, 14.4.2, 15.1.3, 15.1.5, 15.1.6, 15.4.1
Notice of Cancellation or Expiration of Insurance
11.1.4, 11.2.3
Notice of Claims
1.6.2, 2.1.2, 3.7.4, 9.6.8, 10.2.8, **15.1.3**, 15.1.5, 15.1.6, 15.2.8, 15.3.2, 15.4.1
Notice of Testing and Inspections
13.4.1, 13.4.2
Observations, Contractor's
3.2, 3.7.4
Occupancy
2.3.1, 9.6.6, 9.8
Orders, Written
1.1.1, 2.4, 3.9.2, 7, 8.2.2, 11.5, 12.1, 12.2.2.1, 13.4.2, 14.3.1
OWNER
2
Owner, Definition of
2.1.1
Owner, Evidence of Financial Arrangements
2.2, 13.2.2, 14.1.1.4
Owner, Information and Services Required of the
2.1.2, **2.2**, 2.3, 3.2.2, 3.12.10, 6.1.3, 6.1.4, 6.2.5, 9.3.2, 9.6.1, 9.6.4, 9.9.2, 9.10.3, 10.3.3, 11.2, 13.4.1, 13.4.2,
14.1.1.4, 14.1.4, 15.1.4
Owner's Authority
1.5, 2.1.1, 2.3.32.4, 2.5, 3.4.2, 3.8.1, 3.12.10, 3.14.2, 4.1.2, 4.2.4, 4.2.9, 5.2.1, 5.2.4, 5.4.1, 6.1, 6.3, 7.2.1, 7.3.1,
8.2.2, 8.3.1, 9.3.2, 9.5.1, 9.6.4, 9.9.1, 9.10.2, 10.3.2, 11.4, 11.5, 12.2.2, 12.3, 13.2.2, 14.3, 14.4, 15.2.7
Owner's Insurance
11.2
Owner's Relationship with Subcontractors
1.1.2, 5.2, 5.3, 5.4, 9.6.4, 9.10.2, 14.2.2
Owner's Right to Carry Out the Work
2.5, 14.2.2
Owner's Right to Clean Up
6.3
Owner's Right to Perform Construction and to Award Separate Contracts
6.1

AIA Document A201 – 2017. Copyright © 1911, 1915, 1918, 1925, 1937, 1951, 1958, 1961, 1963, 1966, 1970, 1976, 1987, 1997, 2007 and 2017. All rights reserved. "The American Institute of Architects," "American Institute of Architects," "AIA," the AIA Logo, and "AIA Contract Documents" are trademarks of The American Institute of Architects. This document was produced at 16:23:08 EST on 03/06/2025 under Subscription No.20240046071 which expires on 08/01/2025, is not for resale, is licensed for one-time use only, and may only be used in accordance with the AIA Contract Documents® Terms of Service. To report copyright violations, e-mail docinfo@aiacontracts.com.
User Notes: (67ca1160ac1df796e2d601b8)

Owner's Right to Stop the Work
2.4
Owner's Right to Suspend the Work
14.3
Owner's Right to Terminate the Contract
14.2, 14.4
Ownership and Use of Drawings, Specifications and Other Instruments of Service
1.1.1, 1.1.6, 1.1.7, **1.5**, 2.3.6, 3.2.2, 3.11, 3.17, 4.2.12, 5.3
Partial Occupancy or Use
9.6.6, **9.9**
Patching, Cutting and
3.14, 6.2.5
Patents
3.17
Payment, Applications for
4.2.5, 7.3.9, 9.2, **9.3**, 9.4, 9.5, 9.6.3, 9.7, 9.8.5, 9.10.1, 14.2.3, 14.2.4, 14.4.3
Payment, Certificates for
4.2.5, 4.2.9, 9.3.3, **9.4**, 9.5, 9.6.1, 9.6.6, 9.7, 9.10.1, 9.10.3, 14.1.1.3, 14.2.4
Payment, Failure of
9.5.1.3, **9.7**, 9.10.2, 13.5, 14.1.1.3, 14.2.1.2
Payment, Final
4.2.1, 4.2.9, **9.10**, 12.3, 14.2.4, 14.4.3
Payment Bond, Performance Bond and
7.3.4.4, 9.6.7, 9.10.3, **11.1.2**
Payments, Progress
9.3, **9.6**, 9.8.5, 9.10.3, 14.2.3, 15.1.4
PAYMENTS AND COMPLETION
9
Payments to Subcontractors
5.4.2, 9.5.1.3, 9.6.2, 9.6.3, 9.6.4, 9.6.7, 14.2.1.2
PCB
10.3.1
Performance Bond and Payment Bond
7.3.4.4, 9.6.7, 9.10.3, **11.1.2**
Permits, Fees, Notices and Compliance with Laws
2.3.1, **3.7**, 3.13, 7.3.4.4, 10.2.2
PERSONS AND PROPERTY, PROTECTION OF
10
Polychlorinated Biphenyl
10.3.1
Product Data, Definition of
3.12.2
Product Data and Samples, Shop Drawings
3.11, **3.12**, 4.2.7
Progress and Completion
4.2.2, **8.2**, 9.8, 9.9.1, 14.1.4, 15.1.4
Progress Payments
9.3, **9.6**, 9.8.5, 9.10.3, 14.2.3, 15.1.4
Project, Definition of
1.1.4
Project Representatives
4.2.10
Property Insurance
10.2.5, **11.2**
Proposal Requirements

AIA Document A201 – 2017. Copyright © 1911, 1915, 1918, 1925, 1937, 1951, 1958, 1961, 1963, 1966, 1970, 1976, 1987, 1997, 2007 and 2017. All rights reserved. "The American Institute of Architects," "American Institute of Architects," "AIA," the AIA Logo, and "AIA Contract Documents" are trademarks of The American Institute of Architects. This document was produced at 16:23:08 EST on 03/06/2025 under Subscription No.20240046071 which expires on 08/01/2025, is not for resale, is licensed for one-time use only, and may only be used in accordance with the AIA Contract Documents® Terms of Service. To report copyright violations, e-mail docinfo@aiacontracts.com.
User Notes: (67ca1160ac1df796e2d601b8)

1.1.1
PROTECTION OF PERSONS AND PROPERTY
10
Regulations and Laws
1.5, 2.3.2, 3.2.3, 3.6, 3.7, 3.12.10, 3.13, 9.6.4, 9.9.1, 10.2.2, 13.1, 13.3, 13.4.1, 13.4.2, 13.5, 14, 15.2.8, 15.4
Rejection of Work
4.2.6, 12.2.1
Releases and Waivers of Liens
9.3.1, 9.10.2
Representations
3.2.1, 3.5, 3.12.6, 8.2.1, 9.3.3, 9.4.2, 9.5.1, 9.10.1
Representatives
2.1.1, 3.1.1, 3.9, 4.1.1, 4.2.10, 13.2.1
Responsibility for Those Performing the Work
3.3.2, 3.18, 4.2.2, 4.2.3, 5.3, 6.1.3, 6.2, 6.3, 9.5.1, 10
Retainage
9.3.1, 9.6.2, 9.8.5, 9.9.1, 9.10.2, 9.10.3
Review of Contract Documents and Field Conditions by Contractor
3.2, 3.12.7, 6.1.3
Review of Contractor's Submittals by Owner and Architect
3.10.1, 3.10.2, 3.11, 3.12, 4.2, 5.2, 6.1.3, 9.2, 9.8.2
Review of Shop Drawings, Product Data and Samples by Contractor
3.12
Rights and Remedies
1.1.2, 2.4, 2.5, 3.5, 3.7.4, 3.15.2, 4.2.6, 5.3, 5.4, 6.1, 6.3, 7.3.1, 8.3, 9.5.1, 9.7, 10.2.5, 10.3, 12.2.1, 12.2.2, 12.2.4, **13.3**, 14, 15.4
Royalties, Patents and Copyrights
3.17
Rules and Notices for Arbitration
15.4.1
Safety of Persons and Property
10.2, 10.4
Safety Precautions and Programs
3.3.1, 4.2.2, 4.2.7, 5.3, **10.1**, 10.2, 10.4
Samples, Definition of
3.12.3
Samples, Shop Drawings, Product Data and
3.11, **3.12**, 4.2.7
Samples at the Site, Documents and
3.11
Schedule of Values
9.2, 9.3.1
Schedules, Construction
3.10, 3.12.1, 3.12.2, 6.1.3, 15.1.6.2
Separate Contracts and Contractors
1.1.4, 3.12.5, 3.14.2, 4.2.4, 4.2.7, 6, 8.3.1, 12.1.2
Separate Contractors, Definition of
6.1.1
Shop Drawings, Definition of
3.12.1
Shop Drawings, Product Data and Samples
3.11, **3.12**, 4.2.7
Site, Use of
3.13, 6.1.1, 6.2.1
Site Inspections

AIA Document A201 – 2017. Copyright © 1911, 1915, 1918, 1925, 1937, 1951, 1958, 1961, 1963, 1966, 1970, 1976, 1987, 1997, 2007 and 2017. All rights reserved. "The American Institute of Architects," "American Institute of Architects," "AIA," the AIA Logo, and "AIA Contract Documents" are trademarks of The American Institute of Architects. This document was produced at 16:23:08 EST on 03/06/2025 under Subscription No.20240046071 which expires on 08/01/2025, is not for resale, is licensed for one-time use only, and may only be used in accordance with the AIA Contract Documents® Terms of Service. To report copyright violations, e-mail docinfo@aiacontracts.com.
User Notes: (67ca1160ac1df796e2d601b8)

3.2.2, 3.3.3, 3.7.1, 3.7.4, 4.2, 9.9.2, 9.4.2, 9.10.1, 13.4
Site Visits, Architect's
3.7.4, 4.2.2, 4.2.9, 9.4.2, 9.5.1, 9.9.2, 9.10.1, 13.4
Special Inspections and Testing
4.2.6, 12.2.1, 13.4
Specifications, Definition of
1.1.6
Specifications
1.1.1, **1.1.6**, 1.2.2, 1.5, 3.12.10, 3.17, 4.2.14
Statute of Limitations
15.1.2, 15.4.1.1
Stopping the Work
2.2.2, 2.4, 9.7, 10.3, 14.1
Stored Materials
6.2.1, 9.3.2, 10.2.1.2, 10.2.4
Subcontractor, Definition of
5.1.1
SUBCONTRACTORS
5
Subcontractors, Work by
1.2.2, 3.3.2, 3.12.1, 3.18, 4.2.3, 5.2.3, 5.3, 5.4, 9.3.1.2, 9.6.7
Subcontractual Relations
5.3, 5.4, 9.3.1.2, 9.6, 9.10, 10.2.1, 14.1, 14.2.1
Submittals
3.10, 3.11, 3.12, 4.2.7, 5.2.1, 5.2.3, 7.3.4, 9.2, 9.3, 9.8, 9.9.1, 9.10.2, 9.10.3
Submittal Schedule
3.10.2, 3.12.5, 4.2.7
Subrogation, Waivers of
6.1.1, **11.3**
Substances, Hazardous
10.3
Substantial Completion
4.2.9, 8.1.1, 8.1.3, 8.2.3, 9.4.2, **9.8**, 9.9.1, 9.10.3, 12.2, 15.1.2
Substantial Completion, Definition of
9.8.1
Substitution of Subcontractors
5.2.3, 5.2.4
Substitution of Architect
2.3.3
Substitutions of Materials
3.4.2, 3.5, 7.3.8
Sub-subcontractor, Definition of
5.1.2
Subsurface Conditions
3.7.4
Successors and Assigns
13.2
Superintendent
3.9, 10.2.6
Supervision and Construction Procedures
1.2.2, **3.3**, 3.4, 3.12.10, 4.2.2, 4.2.7, 6.1.3, 6.2.4, 7.1.3, 7.3.4, 8.2, 8.3.1, 9.4.2, 10, 12, 14, 15.1.4
Suppliers
1.5, 3.12.1, 4.2.4, 4.2.6, 5.2.1, 9.3, 9.4.2, 9.5.4, 9.6, 9.10.5, 14.2.1
Surety
5.4.1.2, 9.6.8, 9.8.5, 9.10.2, 9.10.3, 11.1.2, 14.2.2, 15.2.7

AIA Document A201 – 2017. Copyright © 1911, 1915, 1918, 1925, 1937, 1951, 1958, 1961, 1963, 1966, 1970, 1976, 1987, 1997, 2007 and 2017. All rights reserved. "The American Institute of Architects," "American Institute of Architects," "AIA," the AIA Logo, and "AIA Contract Documents" are trademarks of The American Institute of Architects. This document was produced at 16:23:08 EST on 03/06/2025 under Subscription No.20240046071 which expires on 08/01/2025, is not for resale, is licensed for one-time use only, and may only be used in accordance with the AIA Contract Documents® Terms of Service. To report copyright violations, e-mail docinfo@aiacontracts.com.
User Notes: (67ca1160ac1df796e2d601b8)

Surety, Consent of
9.8.5, 9.10.2, 9.10.3
Surveys
1.1.7, 2.3.4
Suspension by the Owner for Convenience
14.3
Suspension of the Work
3.7.5, 5.4.2, 14.3
Suspension or Termination of the Contract
5.4.1.1, 14
Taxes
3.6, 3.8.2.1, 7.3.4.4
Termination by the Contractor
14.1, 15.1.7
Termination by the Owner for Cause
5.4.1.1, **14.2,** 15.1.7
Termination by the Owner for Convenience
14.4
Termination of the Architect
2.3.3
Termination of the Contractor Employment
14.2.2

TERMINATION OR SUSPENSION OF THE CONTRACT
14
Tests and Inspections
3.1.3, 3.3.3, 3.7.1, 4.2.2, 4.2.6, 4.2.9, 9.4.2, 9.8.3, 9.9.2, 9.10.1, 10.3.2, 12.2.1, **13.4**
TIME
8
Time, Delays and Extensions of
3.2.4, 3.7.4, 5.2.3, 7.2.1, 7.3.1, 7.4, **8.3**, 9.5.1, 9.7, 10.3.2, 10.4, 14.3.2, 15.1.6, 15.2.5
Time Limits
2.1.2, 2.2, 2.5, 3.2.2, 3.10, 3.11, 3.12.5, 3.15.1, 4.2, 5.2, 5.3, 5.4, 6.2.4, 7.3, 7.4, 8.2, 9.2, 9.3.1, 9.3.3, 9.4.1, 9.5, 9.6, 9.7, 9.8, 9.9, 9.10, 12.2, 13.4, 14, 15.1.2, 15.1.3, 15.4
Time Limits on Claims
3.7.4, 10.2.8, 15.1.2, 15.1.3
Title to Work
9.3.2, 9.3.3
UNCOVERING AND CORRECTION OF WORK
12
Uncovering of Work
12.1
Unforeseen Conditions, Concealed or Unknown
3.7.4, 8.3.1, 10.3
Unit Prices
7.3.3.2, 9.1.2
Use of Documents
1.1.1, 1.5, 2.3.6, 3.12.6, 5.3
Use of Site
3.13, 6.1.1, 6.2.1
Values, Schedule of
9.2, 9.3.1
Waiver of Claims by the Architect
13.3.2
Waiver of Claims by the Contractor

AIA Document A201 – 2017. Copyright © 1911, 1915, 1918, 1925, 1937, 1951, 1958, 1961, 1963, 1966, 1970, 1976, 1987, 1997, 2007 and 2017. All rights reserved. "The American Institute of Architects," "American Institute of Architects," "AIA," the AIA Logo, and "AIA Contract Documents" are trademarks of The American Institute of Architects. This document was produced at 16:23:08 EST on 03/06/2025 under Subscription No.20240046071 which expires on 08/01/2025, is not for resale, is licensed for one-time use only, and may only be used in accordance with the AIA Contract Documents® Terms of Service. To report copyright violations, e-mail docinfo@aiacontracts.com.
User Notes: (67ca1160ac1df796e2d601b8)

9.10.5, 13.3.2, **15.1.7**
Waiver of Claims by the Owner
9.9.3, 9.10.3, 9.10.4, 12.2.2.1, 13.3.2, 14.2.4, **15.1.7**
Waiver of Consequential Damages
14.2.4, 15.1.7
Waiver of Liens
9.3, 9.10.2, 9.10.4
Waivers of Subrogation
6.1.1, **11.3**
Warranty
3.5, 4.2.9, 9.3.3, 9.8.4, 9.9.1, 9.10.2, 9.10.4, 12.2.2, 15.1.2
Weather Delays
8.3, 15.1.6.2
Work, Definition of
1.1.3
Written Consent
1.5.2, 3.4.2, 3.7.4, 3.12.8, 3.14.2, 4.1.2, 9.3.2, 9.10.3, 13.2, 13.3.2, 15.4.4.2
Written Interpretations
4.2.11, 4.2.12
Written Orders
1.1.1, 2.4, 3.9, 7, 8.2.2, 12.1, 12.2, 13.4.2, 14.3.1

AIA Document A201 – 2017. Copyright © 1911, 1915, 1918, 1925, 1937, 1951, 1958, 1961, 1963, 1966, 1970, 1976, 1987, 1997, 2007 and 2017. All rights reserved. “The American Institute of Architects,” “American Institute of Architects,” “AIA,” the AIA Logo, and “AIA Contract Documents” are trademarks of The American Institute of Architects. This document was produced at 16:23:08 EST on 03/06/2025 under Subscription No.20240046071 which expires on 08/01/2025, is not for resale, is licensed for one-time use only, and may only be used in accordance with the AIA Contract Documents® Terms of Service. To report copyright violations, e-mail docinfo@aiacontracts.com.
User Notes: (67ca1160ac1df796e2d601b8)

ARTICLE 1 GENERAL PROVISIONS

§ 1.1 Basic Definitions

§ 1.1.1 The Contract Documents

The Contract Documents are enumerated in the Agreement between the Owner and Contractor (hereinafter the Agreement) and consist of the Agreement, Conditions of the Contract (General, Supplementary and other Conditions), Drawings, Specifications, Addenda issued prior to execution of the Contract, other documents listed in the Agreement, and Modifications issued after execution of the Contract. A Modification is (1) a written amendment to the Contract signed by both parties, (2) a Change Order, (3) a Construction Change Directive, or (4) a written order for a minor change in the Work issued by the Architect. Unless specifically enumerated in the Agreement, the Contract Documents do not include the advertisement or invitation to bid, Instructions to Bidders, sample forms, other information furnished by the Owner in anticipation of receiving bids or proposals, the Contractor's bid or proposal, or portions of Addenda relating to bidding or proposal requirements.

§ 1.1.2 The Contract

The Contract Documents form the Contract for Construction. The Contract represents the entire and integrated agreement between the parties hereto and supersedes prior negotiations, representations, or agreements, either written or oral. The Contract may be amended or modified only by a Modification. The Contract Documents shall not be construed to create a contractual relationship of any kind (1) between the Contractor and the Architect or the Architect's consultants, (2) between the Owner and a Subcontractor or a Sub-subcontractor, (3) between the Owner and the Architect or the Architect's consultants, or (4) between any persons or entities other than the Owner and the Contractor. The Architect shall, however, be entitled to performance and enforcement of obligations under the Contract intended to facilitate performance of the Architect's duties.

§ 1.1.3 The Work

The term "Work" means the construction and services required by the Contract Documents, whether completed or partially completed, and includes all other labor, materials, equipment, and services provided or to be provided by the Contractor to fulfill the Contractor's obligations. The Work may constitute the whole or a part of the Project.

§ 1.1.4 The Project

The Project is the total construction of which the Work performed under the Contract Documents may be the whole or a part and which may include construction by the Owner and by Separate Contractors.

§ 1.1.5 The Drawings

The Drawings are the graphic and pictorial portions of the Contract Documents showing the design, location and dimensions of the Work, generally including plans, elevations, sections, details, schedules, and diagrams.

§ 1.1.6 The Specifications

The Specifications are that portion of the Contract Documents consisting of the written requirements for materials, equipment, systems, standards and workmanship for the Work, and performance of related services.

§ 1.1.7 Instruments of Service

Instruments of Service are representations, in any medium of expression now known or later developed, of the tangible and intangible creative work performed by the Architect and the Architect's consultants under their respective professional services agreements. Instruments of Service may include, without limitation, studies, surveys, models, sketches, drawings, specifications, and other similar materials.

§ 1.1.8 Initial Decision Maker

The Initial Decision Maker is the person identified in the Agreement to render initial decisions on Claims in accordance with Section 15.2. The Initial Decision Maker shall not show partiality to the Owner or Contractor and shall not be liable for results of interpretations or decisions rendered in good faith.

§ 1.2 Correlation and Intent of the Contract Documents

§ 1.2.1 The intent of the Contract Documents is to include all items necessary for the proper execution and completion of the Work by the Contractor. The Contract Documents are complementary, and what is required by one shall be as binding as if required by all; performance by the Contractor shall be required only to the extent consistent with the Contract Documents and reasonably inferable from them as being necessary to produce the indicated results.

AIA Document A201 – 2017. Copyright © 1911, 1915, 1918, 1925, 1937, 1951, 1958, 1961, 1963, 1966, 1970, 1976, 1987, 1997, 2007 and 2017. All rights reserved. "The American Institute of Architects," "American Institute of Architects," "AIA," the AIA Logo, and "AIA Contract Documents" are trademarks of The American Institute of Architects. This document was produced at 16:23:08 EST on 03/06/2025 under Subscription No.20240046071 which expires on 08/01/2025, is not for resale, is licensed for one-time use only, and may only be used in accordance with the AIA Contract Documents® Terms of Service. To report copyright violations, e-mail docinfo@aiacontracts.com.
User Notes: (67ca1160ac1df796e2d601b8)

§ 1.2.1.1 The invalidity of any provision of the Contract Documents shall not invalidate the Contract or its remaining provisions. If it is determined that any provision of the Contract Documents violates any law, or is otherwise invalid or unenforceable, then that provision shall be revised to the extent necessary to make that provision legal and enforceable. In such case the Contract Documents shall be construed, to the fullest extent permitted by law, to give effect to the parties' intentions and purposes in executing the Contract.

§ 1.2.2 Organization of the Specifications into divisions, sections and articles, and arrangement of Drawings shall not control the Contractor in dividing the Work among Subcontractors or in establishing the extent of Work to be performed by any trade.

§ 1.2.3 Unless otherwise stated in the Contract Documents, words that have well-known technical or construction industry meanings are used in the Contract Documents in accordance with such recognized meanings.

§ 1.3 Capitalization

Terms capitalized in these General Conditions include those that are (1) specifically defined, (2) the titles of numbered articles, or (3) the titles of other documents published by the American Institute of Architects.

§ 1.4 Interpretation

In the interest of brevity the Contract Documents frequently omit modifying words such as "all" and "any" and articles such as "the" and "an," but the fact that a modifier or an article is absent from one statement and appears in another is not intended to affect the interpretation of either statement.

§ 1.5 Ownership and Use of Drawings, Specifications, and Other Instruments of Service

§ 1.5.1 The Architect and the Architect's consultants shall be deemed the authors and owners of their respective Instruments of Service, including the Drawings and Specifications, and retain all common law, statutory, and other reserved rights in their Instruments of Service, including copyrights. The Contractor, Subcontractors, Sub-subcontractors, and suppliers shall not own or claim a copyright in the Instruments of Service. Submittal or distribution to meet official regulatory requirements or for other purposes in connection with the Project is not to be construed as publication in derogation of the Architect's or Architect's consultants' reserved rights.

§ 1.5.2 The Contractor, Subcontractors, Sub-subcontractors, and suppliers are authorized to use and reproduce the Instruments of Service provided to them, subject to any protocols established pursuant to Sections 1.7 and 1.8, solely and exclusively for execution of the Work. All copies made under this authorization shall bear the copyright notice, if any, shown on the Instruments of Service. The Contractor, Subcontractors, Sub-subcontractors, and suppliers may not use the Instruments of Service on other projects or for additions to the Project outside the scope of the Work without the specific written consent of the Owner, Architect, and the Architect's consultants.

§ 1.6 Notice

§ 1.6.1 Except as otherwise provided in Section 1.6.2, where the Contract Documents require one party to notify or give notice to the other party, such notice shall be provided in writing to the designated representative of the party to whom the notice is addressed and shall be deemed to have been duly served if delivered in person, by mail, by courier, or by electronic transmission if a method for electronic transmission is set forth in the Agreement.

§ 1.6.2 Notice of Claims as provided in Section 15.1.3 shall be provided in writing and shall be deemed to have been duly served only if delivered to the designated representative of the party to whom the notice is addressed by certified or registered mail, or by courier providing proof of delivery.

§ 1.7 Digital Data Use and Transmission

The parties shall agree upon written protocols governing the transmission and use of, and reliance on, Instruments of Service or any other information or documentation in digital form.

§ 1.8 Building Information Models Use and Reliance

Any use of, or reliance on, all or a portion of a building information model without agreement to written protocols governing the use of, and reliance on, the information contained in the model shall be at the using or relying party's sole risk and without liability to the other party and its contractors or consultants, the authors of, or

AIA Document A201 – 2017. Copyright © 1911, 1915, 1918, 1925, 1937, 1951, 1958, 1961, 1963, 1966, 1970, 1976, 1987, 1997, 2007 and 2017. All rights reserved. "The American Institute of Architects," "American Institute of Architects," "AIA," the AIA Logo, and "AIA Contract Documents" are trademarks of The American Institute of Architects. This document was produced at 16:23:08 EST on 03/06/2025 under Subscription No.20240046071 which expires on 08/01/2025, is not for resale, is licensed for one-time use only, and may only be used in accordance with the AIA Contract Documents® Terms of Service. To report copyright violations, e-mail docinfo@aiacontracts.com.
User Notes: (67ca1160ac1df796e2d601b8)

contributors to, the building information model, and each of their agents and employees.

ARTICLE 2 OWNER

§ 2.1 General

§ 2.1.1 The Owner is the person or entity identified as such in the Agreement and is referred to throughout the Contract Documents as if singular in number. The Owner shall designate in writing a representative who shall have express authority to bind the Owner with respect to all matters requiring the Owner's approval or authorization. Except as otherwise provided in Section 4.2.1, the Architect does not have such authority. The term "Owner" means the Owner or the Owner's authorized representative.

§ 2.1.2 The Owner shall furnish to the Contractor, within fifteen days after receipt of a written request, information necessary and relevant for the Contractor to evaluate, give notice of, or enforce mechanic's lien rights. Such information shall include a correct statement of the record legal title to the property on which the Project is located, usually referred to as the site, and the Owner's interest therein.

§ 2.2 Evidence of the Owner's Financial Arrangements

§ 2.2.1 Prior to commencement of the Work and upon written request by the Contractor, the Owner shall furnish to the Contractor reasonable evidence that the Owner has made financial arrangements to fulfill the Owner's obligations under the Contract. The Contractor shall have no obligation to commence the Work until the Owner provides such evidence. If commencement of the Work is delayed under this Section 2.2.1, the Contract Time shall be extended appropriately.

§ 2.2.2 Following commencement of the Work and upon written request by the Contractor, the Owner shall furnish to the Contractor reasonable evidence that the Owner has made financial arrangements to fulfill the Owner's obligations under the Contract only if (1) the Owner fails to make payments to the Contractor as the Contract Documents require; (2) the Contractor identifies in writing a reasonable concern regarding the Owner's ability to make payment when due; or (3) a change in the Work materially changes the Contract Sum. If the Owner fails to provide such evidence, as required, within fourteen days of the Contractor's request, the Contractor may immediately stop the Work and, in that event, shall notify the Owner that the Work has stopped. However, if the request is made because a change in the Work materially changes the Contract Sum under (3) above, the Contractor may immediately stop only that portion of the Work affected by the change until reasonable evidence is provided. If the Work is stopped under this Section 2.2.2, the Contract Time shall be extended appropriately and the Contract Sum shall be increased by the amount of the Contractor's reasonable costs of shutdown, delay and start-up, plus interest as provided in the Contract Documents.

§ 2.2.3 After the Owner furnishes evidence of financial arrangements under this Section 2.2, the Owner shall not materially vary such financial arrangements without prior notice to the Contractor.

§ 2.2.4 Where the Owner has designated information furnished under this Section 2.2 as "confidential," the Contractor shall keep the information confidential and shall not disclose it to any other person. However, the Contractor may disclose "confidential" information, after seven (7) days' notice to the Owner, where disclosure is required by law, including a subpoena or other form of compulsory legal process issued by a court or governmental entity, or by court or arbitrator(s) order. The Contractor may also disclose "confidential" information to its employees, consultants, sureties, Subcontractors and their employees, Sub-subcontractors, and others who need to know the content of such information solely and exclusively for the Project and who agree to maintain the confidentiality of such information.

§ 2.3 Information and Services Required of the Owner

§ 2.3.1 Except for permits and fees that are the responsibility of the Contractor under the Contract Documents, including those required under Section 3.7.1, the Owner shall secure and pay for necessary approvals, easements, assessments and charges required for construction, use or occupancy of permanent structures or for permanent changes in existing facilities.

§ 2.3.2 The Owner shall retain an architect lawfully licensed to practice architecture, or an entity lawfully practicing architecture, in the jurisdiction where the Project is located. That person or entity is identified as the Architect in the Agreement and is referred to throughout the Contract Documents as if singular in number.

§ 2.3.3 If the employment of the Architect terminates, the Owner shall employ a successor to whom the Contractor

AIA Document A201 – 2017. Copyright © 1911, 1915, 1918, 1925, 1937, 1951, 1958, 1961, 1963, 1966, 1970, 1976, 1987, 1997, 2007 and 2017. All rights reserved. "The American Institute of Architects," "American Institute of Architects," "AIA," the AIA Logo, and "AIA Contract Documents" are trademarks of The American Institute of Architects. This document was produced at 16:23:08 EST on 03/06/2025 under Subscription No.20240046071 which expires on 08/01/2025, is not for resale, is licensed for one-time use only, and may only be used in accordance with the AIA Contract Documents® Terms of Service. To report copyright violations, e-mail docinfo@aiacontracts.com.
User Notes: (67ca1160ac1df796e2d601b8)

has no reasonable objection and whose status under the Contract Documents shall be that of the Architect.

§ 2.3.4 The Owner shall furnish surveys describing physical characteristics, legal limitations and utility locations for the site of the Project, and a legal description of the site. The Contractor shall be entitled to rely on the accuracy of information furnished by the Owner but shall exercise proper precautions relating to the safe performance of the Work.

§ 2.3.5 The Owner shall furnish information or services required of the Owner by the Contract Documents with reasonable promptness. The Owner shall also furnish any other information or services under the Owner's control and relevant to the Contractor's performance of the Work with reasonable promptness after receiving the Contractor's written request for such information or services.

§ 2.3.6 Unless otherwise provided in the Contract Documents, the Owner shall furnish to the Contractor one copy of the Contract Documents for purposes of making reproductions pursuant to Section 1.5.2.

§ 2.4 Owner's Right to Stop the Work

If the Contractor fails to correct Work that is not in accordance with the requirements of the Contract Documents as required by Section 12.2 or repeatedly fails to carry out Work in accordance with the Contract Documents, the Owner may issue a written order to the Contractor to stop the Work, or any portion thereof, until the cause for such order has been eliminated; however, the right of the Owner to stop the Work shall not give rise to a duty on the part of the Owner to exercise this right for the benefit of the Contractor or any other person or entity, except to the extent required by Section 6.1.3.

§ 2.5 Owner's Right to Carry Out the Work

If the Contractor defaults or neglects to carry out the Work in accordance with the Contract Documents and fails within a ten-day period after receipt of notice from the Owner to commence and continue correction of such default or neglect with diligence and promptness, the Owner may, without prejudice to other remedies the Owner may have, correct such default or neglect. Such action by the Owner and amounts charged to the Contractor are both subject to prior approval of the Architect and the Architect may, pursuant to Section 9.5.1, withhold or nullify a Certificate for Payment in whole or in part, to the extent reasonably necessary to reimburse the Owner for the reasonable cost of correcting such deficiencies, including Owner's expenses and compensation for the Architect's additional services made necessary by such default, neglect, or failure. If current and future payments are not sufficient to cover such amounts, the Contractor shall pay the difference to the Owner. If the Contractor disagrees with the actions of the Owner or the Architect, or the amounts claimed as costs to the Owner, the Contractor may file a Claim pursuant to Article 15.

ARTICLE 3 CONTRACTOR

§ 3.1 General

§ 3.1.1 The Contractor is the person or entity identified as such in the Agreement and is referred to throughout the Contract Documents as if singular in number. The Contractor shall be lawfully licensed, if required in the jurisdiction where the Project is located. The Contractor shall designate in writing a representative who shall have express authority to bind the Contractor with respect to all matters under this Contract. The term "Contractor" means the Contractor or the Contractor's authorized representative.

§ 3.1.2 The Contractor shall perform the Work in accordance with the Contract Documents.

§ 3.1.3 The Contractor shall not be relieved of its obligations to perform the Work in accordance with the Contract Documents either by activities or duties of the Architect in the Architect's administration of the Contract, or by tests, inspections or approvals required or performed by persons or entities other than the Contractor.

§ 3.2 Review of Contract Documents and Field Conditions by Contractor

§ 3.2.1 Execution of the Contract by the Contractor is a representation that the Contractor has visited the site, become generally familiar with local conditions under which the Work is to be performed, and correlated personal observations with requirements of the Contract Documents.

§ 3.2.2 Because the Contract Documents are complementary, the Contractor shall, before starting each portion of the Work, carefully study and compare the various Contract Documents relative to that portion of the Work, as well as the information furnished by the Owner pursuant to Section 2.3.4, shall take field measurements of any

AIA Document A201 – 2017. Copyright © 1911, 1915, 1918, 1925, 1937, 1951, 1958, 1961, 1963, 1966, 1970, 1976, 1987, 1997, 2007 and 2017. All rights reserved. "The American Institute of Architects," "American Institute of Architects," "AIA," the AIA Logo, and "AIA Contract Documents" are trademarks of The American Institute of Architects. This document was produced at 16:23:08 EST on 03/06/2025 under Subscription No.20240046071 which expires on 08/01/2025, is not for resale, is licensed for one-time use only, and may only be used in accordance with the AIA Contract Documents® Terms of Service. To report copyright violations, e-mail docinfo@aiacontracts.com.
User Notes: (67ca1160ac1df796e2d601b8)

existing conditions related to that portion of the Work, and shall observe any conditions at the site affecting it. These obligations are for the purpose of facilitating coordination and construction by the Contractor and are not for the purpose of discovering errors, omissions, or inconsistencies in the Contract Documents; however, the Contractor shall promptly report to the Architect any errors, inconsistencies or omissions discovered by or made known to the Contractor as a request for information in such form as the Architect may require. It is recognized that the Contractor's review is made in the Contractor's capacity as a contractor and not as a licensed design professional, unless otherwise specifically provided in the Contract Documents.

§ 3.2.3 The Contractor is not required to ascertain that the Contract Documents are in accordance with applicable laws, statutes, ordinances, codes, rules and regulations, or lawful orders of public authorities, but the Contractor shall promptly report to the Architect any nonconformity discovered by or made known to the Contractor as a request for information in such form as the Architect may require.

§ 3.2.4 If the Contractor believes that additional cost or time is involved because of clarifications or instructions the Architect issues in response to the Contractor's notices or requests for information pursuant to Sections 3.2.2 or 3.2.3, the Contractor shall submit Claims as provided in Article 15. If the Contractor fails to perform the obligations of Sections 3.2.2 or 3.2.3, the Contractor shall pay such costs and damages to the Owner, subject to Section 15.1.7, as would have been avoided if the Contractor had performed such obligations. If the Contractor performs those obligations, the Contractor shall not be liable to the Owner or Architect for damages resulting from errors, inconsistencies or omissions in the Contract Documents, for differences between field measurements or conditions and the Contract Documents, or for nonconformities of the Contract Documents to applicable laws, statutes, ordinances, codes, rules and regulations, and lawful orders of public authorities.

§ 3.3 Supervision and Construction Procedures

§ 3.3.1 The Contractor shall supervise and direct the Work, using the Contractor's best skill and attention. The Contractor shall be solely responsible for, and have control over, construction means, methods, techniques, sequences, and procedures, and for coordinating all portions of the Work under the Contract. If the Contract Documents give specific instructions concerning construction means, methods, techniques, sequences, or procedures, the Contractor shall evaluate the jobsite safety thereof and shall be solely responsible for the jobsite safety of such means, methods, techniques, sequences, or procedures. If the Contractor determines that such means, methods, techniques, sequences or procedures may not be safe, the Contractor shall give timely notice to the Owner and Architect, and shall propose alternative means, methods, techniques, sequences, or procedures. The Architect shall evaluate the proposed alternative solely for conformance with the design intent for the completed construction. Unless the Architect objects to the Contractor's proposed alternative, the Contractor shall perform the Work using its alternative means, methods, techniques, sequences, or procedures.

§ 3.3.2 The Contractor shall be responsible to the Owner for acts and omissions of the Contractor's employees, Subcontractors and their agents and employees, and other persons or entities performing portions of the Work for, or on behalf of, the Contractor or any of its Subcontractors.

§ 3.3.3 The Contractor shall be responsible for inspection of portions of Work already performed to determine that such portions are in proper condition to receive subsequent Work.

§ 3.4 Labor and Materials

§ 3.4.1 Unless otherwise provided in the Contract Documents, the Contractor shall provide and pay for labor, materials, equipment, tools, construction equipment and machinery, water, heat, utilities, transportation, and other facilities and services necessary for proper execution and completion of the Work, whether temporary or permanent and whether or not incorporated or to be incorporated in the Work.

§ 3.4.2 Except in the case of minor changes in the Work approved by the Architect in accordance with Section 3.12.8 or ordered by the Architect in accordance with Section 7.4, the Contractor may make substitutions only with the consent of the Owner, after evaluation by the Architect and in accordance with a Change Order or Construction Change Directive.

§ 3.4.3 The Contractor shall enforce strict discipline and good order among the Contractor's employees and other persons carrying out the Work. The Contractor shall not permit employment of unfit persons or persons not properly skilled in tasks assigned to them.

AIA Document A201 – 2017. Copyright © 1911, 1915, 1918, 1925, 1937, 1951, 1958, 1961, 1963, 1966, 1970, 1976, 1987, 1997, 2007 and 2017. All rights reserved. "The American Institute of Architects," "American Institute of Architects," "AIA," the AIA Logo, and "AIA Contract Documents" are trademarks of The American Institute of Architects. This document was produced at 16:23:08 EST on 03/06/2025 under Subscription No.20240046071 which expires on 08/01/2025, is not for resale, is licensed for one-time use only, and may only be used in accordance with the AIA Contract Documents® Terms of Service. To report copyright violations, e-mail docinfo@aiacontracts.com.
User Notes: (67ca1160ac1df796e2d601b8)

§ 3.5 Warranty

§ 3.5.1 The Contractor warrants to the Owner and Architect that materials and equipment furnished under the Contract will be of good quality and new unless the Contract Documents require or permit otherwise. The Contractor further warrants that the Work will conform to the requirements of the Contract Documents and will be free from defects, except for those inherent in the quality of the Work the Contract Documents require or permit. Work, materials, or equipment not conforming to these requirements may be considered defective. The Contractor's warranty excludes remedy for damage or defect caused by abuse, alterations to the Work not executed by the Contractor, improper or insufficient maintenance, improper operation, or normal wear and tear and normal usage. If required by the Architect, the Contractor shall furnish satisfactory evidence as to the kind and quality of materials and equipment.

§ 3.5.2 All material, equipment, or other special warranties required by the Contract Documents shall be issued in the name of the Owner, or shall be transferable to the Owner, and shall commence in accordance with Section 9.8.4.

§ 3.6 Taxes

The Contractor shall pay sales, consumer, use and similar taxes for the Work provided by the Contractor that are legally enacted when bids are received or negotiations concluded, whether or not yet effective or merely scheduled to go into effect.

§ 3.7 Permits, Fees, Notices and Compliance with Laws

§ 3.7.1 Unless otherwise provided in the Contract Documents, the Contractor shall secure and pay for the building permit as well as for other permits, fees, licenses, and inspections by government agencies necessary for proper execution and completion of the Work that are customarily secured after execution of the Contract and legally required at the time bids are received or negotiations concluded.

§ 3.7.2 The Contractor shall comply with and give notices required by applicable laws, statutes, ordinances, codes, rules and regulations, and lawful orders of public authorities applicable to performance of the Work.

§ 3.7.3 If the Contractor performs Work knowing it to be contrary to applicable laws, statutes, ordinances, codes, rules and regulations, or lawful orders of public authorities, the Contractor shall assume appropriate responsibility for such Work and shall bear the costs attributable to correction.

§ 3.7.4 Concealed or Unknown Conditions

If the Contractor encounters conditions at the site that are (1) subsurface or otherwise concealed physical conditions that differ materially from those indicated in the Contract Documents or (2) unknown physical conditions of an unusual nature that differ materially from those ordinarily found to exist and generally recognized as inherent in construction activities of the character provided for in the Contract Documents, the Contractor shall promptly provide notice to the Owner and the Architect before conditions are disturbed and in no event later than 14 days after first observance of the conditions. The Architect will promptly investigate such conditions and, if the Architect determines that they differ materially and cause an increase or decrease in the Contractor's cost of, or time required for, performance of any part of the Work, will recommend that an equitable adjustment be made in the Contract Sum or Contract Time, or both. If the Architect determines that the conditions at the site are not materially different from those indicated in the Contract Documents and that no change in the terms of the Contract is justified, the Architect shall promptly notify the Owner and Contractor, stating the reasons. If either party disputes the Architect's determination or recommendation, that party may submit a Claim as provided in Article 15.

§ 3.7.5 If, in the course of the Work, the Contractor encounters human remains or recognizes the existence of burial markers, archaeological sites or wetlands not indicated in the Contract Documents, the Contractor shall immediately suspend any operations that would affect them and shall notify the Owner and Architect. Upon receipt of such notice, the Owner shall promptly take any action necessary to obtain governmental authorization required to resume the operations. The Contractor shall continue to suspend such operations until otherwise instructed by the Owner but shall continue with all other operations that do not affect those remains or features. Requests for adjustments in the Contract Sum and Contract Time arising from the existence of such remains or features may be made as provided in Article 15.

§ 3.8 Allowances

AIA Document A201 – 2017. Copyright © 1911, 1915, 1918, 1925, 1937, 1951, 1958, 1961, 1963, 1966, 1970, 1976, 1987, 1997, 2007 and 2017. All rights reserved. "The American Institute of Architects," "American Institute of Architects," "AIA," the AIA Logo, and "AIA Contract Documents" are trademarks of The American Institute of Architects. This document was produced at 16:23:08 EST on 03/06/2025 under Subscription No.20240046071 which expires on 08/01/2025, is not for resale, is licensed for one-time use only, and may only be used in accordance with the AIA Contract Documents® Terms of Service. To report copyright violations, e-mail docinfo@aiacontracts.com.
User Notes: (67ca1160ac1df796e2d601b8)

§ 3.8.1 The Contractor shall include in the Contract Sum all allowances stated in the Contract Documents. Items covered by allowances shall be supplied for such amounts and by such persons or entities as the Owner may direct, but the Contractor shall not be required to employ persons or entities to whom the Contractor has reasonable objection.

§ 3.8.2 Unless otherwise provided in the Contract Documents,

.1 allowances shall cover the cost to the Contractor of materials and equipment delivered at the site and all required taxes, less applicable trade discounts;

.2 Contractor's costs for unloading and handling at the site, labor, installation costs, overhead, profit, and other expenses contemplated for stated allowance amounts shall be included in the Contract Sum but not in the allowances; and

.3 whenever costs are more than or less than allowances, the Contract Sum shall be adjusted accordingly by Change Order. The amount of the Change Order shall reflect (1) the difference between actual costs and the allowances under Section 3.8.2.1 and (2) changes in Contractor's costs under Section 3.8.2.2.

§ 3.8.3 Materials and equipment under an allowance shall be selected by the Owner with reasonable promptness.

§ 3.9 Superintendent

§ 3.9.1 The Contractor shall employ a competent superintendent and necessary assistants who shall be in attendance at the Project site during performance of the Work. The superintendent shall represent the Contractor, and communications given to the superintendent shall be as binding as if given to the Contractor.

§ 3.9.2 The Contractor, as soon as practicable after award of the Contract, shall notify the Owner and Architect of the name and qualifications of a proposed superintendent. Within 14 days of receipt of the information, the Architect may notify the Contractor, stating whether the Owner or the Architect (1) has reasonable objection to the proposed superintendent or (2) requires additional time for review. Failure of the Architect to provide notice within the 14-day period shall constitute notice of no reasonable objection.

§ 3.9.3 The Contractor shall not employ a proposed superintendent to whom the Owner or Architect has made reasonable and timely objection. The Contractor shall not change the superintendent without the Owner's consent, which shall not unreasonably be withheld or delayed.

§ 3.10 Contractor's Construction and Submittal Schedules

§ 3.10.1 The Contractor, promptly after being awarded the Contract, shall submit for the Owner's and Architect's information a Contractor's construction schedule for the Work. The schedule shall contain detail appropriate for the Project, including (1) the date of commencement of the Work, interim schedule milestone dates, and the date of Substantial Completion; (2) an apportionment of the Work by construction activity; and (3) the time required for completion of each portion of the Work. The schedule shall provide for the orderly progression of the Work to completion and shall not exceed time limits current under the Contract Documents. The schedule shall be revised at appropriate intervals as required by the conditions of the Work and Project.

§ 3.10.2 The Contractor, promptly after being awarded the Contract and thereafter as necessary to maintain a current submittal schedule, shall submit a submittal schedule for the Architect's approval. The Architect's approval shall not be unreasonably delayed or withheld. The submittal schedule shall (1) be coordinated with the Contractor's construction schedule, and (2) allow the Architect reasonable time to review submittals. If the Contractor fails to submit a submittal schedule, or fails to provide submittals in accordance with the approved submittal schedule, the Contractor shall not be entitled to any increase in Contract Sum or extension of Contract Time based on the time required for review of submittals.

§ 3.10.3 The Contractor shall perform the Work in general accordance with the most recent schedules submitted to the Owner and Architect.

§ 3.11 Documents and Samples at the Site

The Contractor shall make available, at the Project site, the Contract Documents, including Change Orders, Construction Change Directives, and other Modifications, in good order and marked currently to indicate field changes and selections made during construction, and the approved Shop Drawings, Product Data, Samples, and

AIA Document A201 – 2017. Copyright © 1911, 1915, 1918, 1925, 1937, 1951, 1958, 1961, 1963, 1966, 1970, 1976, 1987, 1997, 2007 and 2017. All rights reserved. "The American Institute of Architects," "American Institute of Architects," "AIA," the AIA Logo, and "AIA Contract Documents" are trademarks of The American Institute of Architects. This document was produced at 16:23:08 EST on 03/06/2025 under Subscription No.20240046071 which expires on 08/01/2025, is not for resale, is licensed for one-time use only, and may only be used in accordance with the AIA Contract Documents® Terms of Service. To report copyright violations, e-mail docinfo@aiacontracts.com.
User Notes: (67ca1160ac1df796e2d601b8)

similar required submittals. These shall be in electronic form or paper copy, available to the Architect and Owner, and delivered to the Architect for submittal to the Owner upon completion of the Work as a record of the Work as constructed.

§ 3.12 Shop Drawings, Product Data and Samples

§ 3.12.1 Shop Drawings are drawings, diagrams, schedules, and other data specially prepared for the Work by the Contractor or a Subcontractor, Sub-subcontractor, manufacturer, supplier, or distributor to illustrate some portion of the Work.

§ 3.12.2 Product Data are illustrations, standard schedules, performance charts, instructions, brochures, diagrams, and other information furnished by the Contractor to illustrate materials or equipment for some portion of the Work.

§ 3.12.3 Samples are physical examples that illustrate materials, equipment, or workmanship, and establish standards by which the Work will be judged.

§ 3.12.4 Shop Drawings, Product Data, Samples, and similar submittals are not Contract Documents. Their purpose is to demonstrate how the Contractor proposes to conform to the information given and the design concept expressed in the Contract Documents for those portions of the Work for which the Contract Documents require submittals. Review by the Architect is subject to the limitations of Section 4.2.7. Informational submittals upon which the Architect is not expected to take responsive action may be so identified in the Contract Documents. Submittals that are not required by the Contract Documents may be returned by the Architect without action.

§ 3.12.5 The Contractor shall review for compliance with the Contract Documents, approve, and submit to the Architect, Shop Drawings, Product Data, Samples, and similar submittals required by the Contract Documents, in accordance with the submittal schedule approved by the Architect or, in the absence of an approved submittal schedule, with reasonable promptness and in such sequence as to cause no delay in the Work or in the activities of the Owner or of Separate Contractors.

§ 3.12.6 By submitting Shop Drawings, Product Data, Samples, and similar submittals, the Contractor represents to the Owner and Architect that the Contractor has (1) reviewed and approved them, (2) determined and verified materials, field measurements and field construction criteria related thereto, or will do so, and (3) checked and coordinated the information contained within such submittals with the requirements of the Work and of the Contract Documents.

§ 3.12.7 The Contractor shall perform no portion of the Work for which the Contract Documents require submittal and review of Shop Drawings, Product Data, Samples, or similar submittals, until the respective submittal has been approved by the Architect.

§ 3.12.8 The Work shall be in accordance with approved submittals except that the Contractor shall not be relieved of responsibility for deviations from the requirements of the Contract Documents by the Architect's approval of Shop Drawings, Product Data, Samples, or similar submittals, unless the Contractor has specifically notified the Architect of such deviation at the time of submittal and (1) the Architect has given written approval to the specific deviation as a minor change in the Work, or (2) a Change Order or Construction Change Directive has been issued authorizing the deviation. The Contractor shall not be relieved of responsibility for errors or omissions in Shop Drawings, Product Data, Samples, or similar submittals, by the Architect's approval thereof.

§ 3.12.9 The Contractor shall direct specific attention, in writing or on resubmitted Shop Drawings, Product Data, Samples, or similar submittals, to revisions other than those requested by the Architect on previous submittals. In the absence of such notice, the Architect's approval of a resubmission shall not apply to such revisions.

§ 3.12.10 The Contractor shall not be required to provide professional services that constitute the practice of architecture or engineering unless such services are specifically required by the Contract Documents for a portion of the Work or unless the Contractor needs to provide such services in order to carry out the Contractor's responsibilities for construction means, methods, techniques, sequences, and procedures. The Contractor shall not be required to provide professional services in violation of applicable law.

AIA Document A201 – 2017. Copyright © 1911, 1915, 1918, 1925, 1937, 1951, 1958, 1961, 1963, 1966, 1970, 1976, 1987, 1997, 2007 and 2017. All rights reserved. "The American Institute of Architects," "American Institute of Architects," "AIA," the AIA Logo, and "AIA Contract Documents" are trademarks of The American Institute of Architects. This document was produced at 16:23:08 EST on 03/06/2025 under Subscription No.20240046071 which expires on 08/01/2025, is not for resale, is licensed for one-time use only, and may only be used in accordance with the AIA Contract Documents® Terms of Service. To report copyright violations, e-mail docinfo@aiacontracts.com.
User Notes: (67ca1160ac1df796e2d601b8)

§ 3.12.10.1 If professional design services or certifications by a design professional related to systems, materials, or equipment are specifically required of the Contractor by the Contract Documents, the Owner and the Architect will specify all performance and design criteria that such services must satisfy. The Contractor shall be entitled to rely upon the adequacy and accuracy of the performance and design criteria provided in the Contract Documents. The Contractor shall cause such services or certifications to be provided by an appropriately licensed design professional, whose signature and seal shall appear on all drawings, calculations, specifications, certifications, Shop Drawings, and other submittals prepared by such professional. Shop Drawings, and other submittals related to the Work, designed or certified by such professional, if prepared by others, shall bear such professional's written approval when submitted to the Architect. The Owner and the Architect shall be entitled to rely upon the adequacy and accuracy of the services, certifications, and approvals performed or provided by such design professionals, provided the Owner and Architect have specified to the Contractor the performance and design criteria that such services must satisfy. Pursuant to this Section 3.12.10, the Architect will review and approve or take other appropriate action on submittals only for the limited purpose of checking for conformance with information given and the design concept expressed in the Contract Documents.

§ 3.12.10.2 If the Contract Documents require the Contractor's design professional to certify that the Work has been performed in accordance with the design criteria, the Contractor shall furnish such certifications to the Architect at the time and in the form specified by the Architect.

§ 3.13 Use of Site

The Contractor shall confine operations at the site to areas permitted by applicable laws, statutes, ordinances, codes, rules and regulations, lawful orders of public authorities, and the Contract Documents and shall not unreasonably encumber the site with materials or equipment.

§ 3.14 Cutting and Patching

§ 3.14.1 The Contractor shall be responsible for cutting, fitting, or patching required to complete the Work or to make its parts fit together properly. All areas requiring cutting, fitting, or patching shall be restored to the condition existing prior to the cutting, fitting, or patching, unless otherwise required by the Contract Documents.

§ 3.14.2 The Contractor shall not damage or endanger a portion of the Work or fully or partially completed construction of the Owner or Separate Contractors by cutting, patching, or otherwise altering such construction, or by excavation. The Contractor shall not cut or otherwise alter construction by the Owner or a Separate Contractor except with written consent of the Owner and of the Separate Contractor. Consent shall not be unreasonably withheld. The Contractor shall not unreasonably withhold, from the Owner or a Separate Contractor, its consent to cutting or otherwise altering the Work.

§ 3.15 Cleaning Up

§ 3.15.1 The Contractor shall keep the premises and surrounding area free from accumulation of waste materials and rubbish caused by operations under the Contract. At completion of the Work, the Contractor shall remove waste materials, rubbish, the Contractor's tools, construction equipment, machinery, and surplus materials from and about the Project.

§ 3.15.2 If the Contractor fails to clean up as provided in the Contract Documents, the Owner may do so and the Owner shall be entitled to reimbursement from the Contractor.

§ 3.16 Access to Work

The Contractor shall provide the Owner and Architect with access to the Work in preparation and progress wherever located.

§ 3.17 Royalties, Patents and Copyrights

The Contractor shall pay all royalties and license fees. The Contractor shall defend suits or claims for infringement of copyrights and patent rights and shall hold the Owner and Architect harmless from loss on account thereof, but shall not be responsible for defense or loss when a particular design, process, or product of a particular manufacturer or manufacturers is required by the Contract Documents, or where the copyright violations are contained in Drawings, Specifications, or other documents prepared by the Owner or Architect. However, if an infringement of a copyright or patent is discovered by, or made known to, the Contractor, the Contractor shall be responsible for the loss unless the information is promptly furnished to the Architect.

AIA Document A201 – 2017. Copyright © 1911, 1915, 1918, 1925, 1937, 1951, 1958, 1961, 1963, 1966, 1970, 1976, 1987, 1997, 2007 and 2017. All rights reserved. "The American Institute of Architects," "American Institute of Architects," "AIA," the AIA Logo, and "AIA Contract Documents" are trademarks of The American Institute of Architects. This document was produced at 16:23:08 EST on 03/06/2025 under Subscription No.20240046071 which expires on 08/01/2025, is not for resale, is licensed for one-time use only, and may only be used in accordance with the AIA Contract Documents® Terms of Service. To report copyright violations, e-mail docinfo@aiacontracts.com.
User Notes: (67ca1160ac1df796e2d601b8)

§ 3.18 Indemnification

§ 3.18.1 To the fullest extent permitted by law, the Contractor shall indemnify and hold harmless the Owner, Architect, Architect's consultants, and agents and employees of any of them from and against claims, damages, losses, and expenses, including but not limited to attorneys' fees, arising out of or resulting from performance of the Work, provided that such claim, damage, loss, or expense is attributable to bodily injury, sickness, disease or death, or to injury to or destruction of tangible property (other than the Work itself), but only to the extent caused by the negligent acts or omissions of the Contractor, a Subcontractor, anyone directly or indirectly employed by them, or anyone for whose acts they may be liable, regardless of whether or not such claim, damage, loss, or expense is caused in part by a party indemnified hereunder. Such obligation shall not be construed to negate, abridge, or reduce other rights or obligations of indemnity that would otherwise exist as to a party or person described in this Section 3.18.

§ 3.18.2 In claims against any person or entity indemnified under this Section 3.18 by an employee of the Contractor, a Subcontractor, anyone directly or indirectly employed by them, or anyone for whose acts they may be liable, the indemnification obligation under Section 3.18.1 shall not be limited by a limitation on amount or type of damages, compensation, or benefits payable by or for the Contractor or a Subcontractor under workers' compensation acts, disability benefit acts, or other employee benefit acts.

ARTICLE 4 ARCHITECT

§ 4.1 General

§ 4.1.1 The Architect is the person or entity retained by the Owner pursuant to Section 2.3.2 and identified as such in the Agreement.

§ 4.1.2 Duties, responsibilities, and limitations of authority of the Architect as set forth in the Contract Documents shall not be restricted, modified, or extended without written consent of the Owner, Contractor, and Architect. Consent shall not be unreasonably withheld.

§ 4.2 Administration of the Contract

§ 4.2.1 The Architect will provide administration of the Contract as described in the Contract Documents and will be an Owner's representative during construction until the date the Architect issues the final Certificate for Payment. The Architect will have authority to act on behalf of the Owner only to the extent provided in the Contract Documents.

§ 4.2.2 The Architect will visit the site at intervals appropriate to the stage of construction, or as otherwise agreed with the Owner, to become generally familiar with the progress and quality of the portion of the Work completed, and to determine in general if the Work observed is being performed in a manner indicating that the Work, when fully completed, will be in accordance with the Contract Documents. However, the Architect will not be required to make exhaustive or continuous on-site inspections to check the quality or quantity of the Work. The Architect will not have control over, charge of, or responsibility for the construction means, methods, techniques, sequences or procedures, or for the safety precautions and programs in connection with the Work, since these are solely the Contractor's rights and responsibilities under the Contract Documents.

§ 4.2.3 On the basis of the site visits, the Architect will keep the Owner reasonably informed about the progress and quality of the portion of the Work completed, and promptly report to the Owner (1) known deviations from the Contract Documents, (2) known deviations from the most recent construction schedule submitted by the Contractor, and (3) defects and deficiencies observed in the Work. The Architect will not be responsible for the Contractor's failure to perform the Work in accordance with the requirements of the Contract Documents. The Architect will not have control over or charge of, and will not be responsible for acts or omissions of, the Contractor, Subcontractors, or their agents or employees, or any other persons or entities performing portions of the Work.

§ 4.2.4 Communications

The Owner and Contractor shall include the Architect in all communications that relate to or affect the Architect's services or professional responsibilities. The Owner shall promptly notify the Architect of the substance of any direct communications between the Owner and the Contractor otherwise relating to the Project. Communications by and with the Architect's consultants shall be through the Architect. Communications by and with Subcontractors and suppliers shall be through the Contractor. Communications by and with Separate Contractors shall be through the Owner. The Contract Documents may specify other communication protocols.

AIA Document A201 – 2017. Copyright © 1911, 1915, 1918, 1925, 1937, 1951, 1958, 1961, 1963, 1966, 1970, 1976, 1987, 1997, 2007 and 2017. All rights reserved. "The American Institute of Architects," "American Institute of Architects," "AIA," the AIA Logo, and "AIA Contract Documents" are trademarks of The American Institute of Architects. This document was produced at 16:23:08 EST on 03/06/2025 under Subscription No.20240046071 which expires on 08/01/2025, is not for resale, is licensed for one-time use only, and may only be used in accordance with the AIA Contract Documents® Terms of Service. To report copyright violations, e-mail docinfo@aiacontracts.com.
User Notes: (67ca1160ac1df796e2d601b8)

§ 4.2.5 Based on the Architect's evaluations of the Contractor's Applications for Payment, the Architect will review and certify the amounts due the Contractor and will issue Certificates for Payment in such amounts.

§ 4.2.6 The Architect has authority to reject Work that does not conform to the Contract Documents. Whenever the Architect considers it necessary or advisable, the Architect will have authority to require inspection or testing of the Work in accordance with Sections 13.4.2 and 13.4.3, whether or not the Work is fabricated, installed or completed. However, neither this authority of the Architect nor a decision made in good faith either to exercise or not to exercise such authority shall give rise to a duty or responsibility of the Architect to the Contractor, Subcontractors, suppliers, their agents or employees, or other persons or entities performing portions of the Work.

§ 4.2.7 The Architect will review and approve, or take other appropriate action upon, the Contractor's submittals such as Shop Drawings, Product Data, and Samples, but only for the limited purpose of checking for conformance with information given and the design concept expressed in the Contract Documents. The Architect's action will be taken in accordance with the submittal schedule approved by the Architect or, in the absence of an approved submittal schedule, with reasonable promptness while allowing sufficient time in the Architect's professional judgment to permit adequate review. Review of such submittals is not conducted for the purpose of determining the accuracy and completeness of other details such as dimensions and quantities, or for substantiating instructions for installation or performance of equipment or systems, all of which remain the responsibility of the Contractor as required by the Contract Documents. The Architect's review of the Contractor's submittals shall not relieve the Contractor of the obligations under Sections 3.3, 3.5, and 3.12. The Architect's review shall not constitute approval of safety precautions or of any construction means, methods, techniques, sequences, or procedures. The Architect's approval of a specific item shall not indicate approval of an assembly of which the item is a component.

§ 4.2.8 The Architect will prepare Change Orders and Construction Change Directives, and may order minor changes in the Work as provided in Section 7.4. The Architect will investigate and make determinations and recommendations regarding concealed and unknown conditions as provided in Section 3.7.4.

§ 4.2.9 The Architect will conduct inspections to determine the date or dates of Substantial Completion and the date of final completion; issue Certificates of Substantial Completion pursuant to Section 9.8; receive and forward to the Owner, for the Owner's review and records, written warranties and related documents required by the Contract and assembled by the Contractor pursuant to Section 9.10; and issue a final Certificate for Payment pursuant to Section 9.10.

§ 4.2.10 If the Owner and Architect agree, the Architect will provide one or more Project representatives to assist in carrying out the Architect's responsibilities at the site. The Owner shall notify the Contractor of any change in the duties, responsibilities and limitations of authority of the Project representatives.

§ 4.2.11 The Architect will interpret and decide matters concerning performance under, and requirements of, the Contract Documents on written request of either the Owner or Contractor. The Architect's response to such requests will be made in writing within any time limits agreed upon or otherwise with reasonable promptness.

§ 4.2.12 Interpretations and decisions of the Architect will be consistent with the intent of, and reasonably inferable from, the Contract Documents and will be in writing or in the form of drawings. When making such interpretations and decisions, the Architect will endeavor to secure faithful performance by both Owner and Contractor, will not show partiality to either, and will not be liable for results of interpretations or decisions rendered in good faith.

§ 4.2.13 The Architect's decisions on matters relating to aesthetic effect will be final if consistent with the intent expressed in the Contract Documents.

§ 4.2.14 The Architect will review and respond to requests for information about the Contract Documents. The Architect's response to such requests will be made in writing within any time limits agreed upon or otherwise with reasonable promptness. If appropriate, the Architect will prepare and issue supplemental Drawings and Specifications in response to the requests for information.

AIA Document A201 – 2017. Copyright © 1911, 1915, 1918, 1925, 1937, 1951, 1958, 1961, 1963, 1966, 1970, 1976, 1987, 1997, 2007 and 2017. All rights reserved. "The American Institute of Architects," "American Institute of Architects," "AIA," the AIA Logo, and "AIA Contract Documents" are trademarks of The American Institute of Architects. This document was produced at 16:23:08 EST on 03/06/2025 under Subscription No.20240046071 which expires on 08/01/2025, is not for resale, is licensed for one-time use only, and may only be used in accordance with the AIA Contract Documents® Terms of Service. To report copyright violations, e-mail docinfo@aiacontracts.com.
User Notes: (67ca1160ac1df796e2d601b8)

ARTICLE 5 SUBCONTRACTORS

§ 5.1 Definitions

§ 5.1.1 A Subcontractor is a person or entity who has a direct contract with the Contractor to perform a portion of the Work at the site. The term "Subcontractor" is referred to throughout the Contract Documents as if singular in number and means a Subcontractor or an authorized representative of the Subcontractor. The term "Subcontractor" does not include a Separate Contractor or the subcontractors of a Separate Contractor.

§ 5.1.2 A Sub-subcontractor is a person or entity who has a direct or indirect contract with a Subcontractor to perform a portion of the Work at the site. The term "Sub-subcontractor" is referred to throughout the Contract Documents as if singular in number and means a Sub-subcontractor or an authorized representative of the Sub-subcontractor.

§ 5.2 Award of Subcontracts and Other Contracts for Portions of the Work

§ 5.2.1 Unless otherwise stated in the Contract Documents, the Contractor, as soon as practicable after award of the Contract, shall notify the Owner and Architect of the persons or entities proposed for each principal portion of the Work, including those who are to furnish materials or equipment fabricated to a special design. Within 14 days of receipt of the information, the Architect may notify the Contractor whether the Owner or the Architect (1) has reasonable objection to any such proposed person or entity or (2) requires additional time for review. Failure of the Architect to provide notice within the 14-day period shall constitute notice of no reasonable objection.

§ 5.2.2 The Contractor shall not contract with a proposed person or entity to whom the Owner or Architect has made reasonable and timely objection. The Contractor shall not be required to contract with anyone to whom the Contractor has made reasonable objection.

§ 5.2.3 If the Owner or Architect has reasonable objection to a person or entity proposed by the Contractor, the Contractor shall propose another to whom the Owner or Architect has no reasonable objection. If the proposed but rejected Subcontractor was reasonably capable of performing the Work, the Contract Sum and Contract Time shall be increased or decreased by the difference, if any, occasioned by such change, and an appropriate Change Order shall be issued before commencement of the substitute Subcontractor's Work. However, no increase in the Contract Sum or Contract Time shall be allowed for such change unless the Contractor has acted promptly and responsively in submitting names as required.

§ 5.2.4 The Contractor shall not substitute a Subcontractor, person, or entity for one previously selected if the Owner or Architect makes reasonable objection to such substitution.

§ 5.3 Subcontractual Relations

By appropriate written agreement, the Contractor shall require each Subcontractor, to the extent of the Work to be performed by the Subcontractor, to be bound to the Contractor by terms of the Contract Documents, and to assume toward the Contractor all the obligations and responsibilities, including the responsibility for safety of the Subcontractor's Work that the Contractor, by these Contract Documents, assumes toward the Owner and Architect. Each subcontract agreement shall preserve and protect the rights of the Owner and Architect under the Contract Documents with respect to the Work to be performed by the Subcontractor so that subcontracting thereof will not prejudice such rights, and shall allow to the Subcontractor, unless specifically provided otherwise in the subcontract agreement, the benefit of all rights, remedies, and redress against the Contractor that the Contractor, by the Contract Documents, has against the Owner. Where appropriate, the Contractor shall require each Subcontractor to enter into similar agreements with Sub-subcontractors. The Contractor shall make available to each proposed Subcontractor, prior to the execution of the subcontract agreement, copies of the Contract Documents to which the Subcontractor will be bound, and, upon written request of the Subcontractor, identify to the Subcontractor terms and conditions of the proposed subcontract agreement that may be at variance with the Contract Documents. Subcontractors will similarly make copies of applicable portions of such documents available to their respective proposed Sub-subcontractors.

§ 5.4 Contingent Assignment of Subcontracts

§ 5.4.1 Each subcontract agreement for a portion of the Work is assigned by the Contractor to the Owner, provided that

.1 assignment is effective only after termination of the Contract by the Owner for cause pursuant to Section 14.2 and only for those subcontract agreements that the Owner accepts by notifying the Subcontractor and Contractor; and

AIA Document A201 – 2017. Copyright © 1911, 1915, 1918, 1925, 1937, 1951, 1958, 1961, 1963, 1966, 1970, 1976, 1987, 1997, 2007 and 2017. All rights reserved. "The American Institute of Architects," "American Institute of Architects," "AIA," the AIA Logo, and "AIA Contract Documents" are trademarks of The American Institute of Architects. This document was produced at 16:23:08 EST on 03/06/2025 under Subscription No.20240046071 which expires on 08/01/2025, is not for resale, is licensed for one-time use only, and may only be used in accordance with the AIA Contract Documents® Terms of Service. To report copyright violations, e-mail docinfo@aiacontracts.com.
User Notes: (67ca1160ac1df796e2d601b8)

.2 assignment is subject to the prior rights of the surety, if any, obligated under bond relating to the Contract.

When the Owner accepts the assignment of a subcontract agreement, the Owner assumes the Contractor's rights and obligations under the subcontract.

§ 5.4.2 Upon such assignment, if the Work has been suspended for more than 30 days, the Subcontractor's compensation shall be equitably adjusted for increases in cost resulting from the suspension.

§ 5.4.3 Upon assignment to the Owner under this Section 5.4, the Owner may further assign the subcontract to a successor contractor or other entity. If the Owner assigns the subcontract to a successor contractor or other entity, the Owner shall nevertheless remain legally responsible for all of the successor contractor's obligations under the subcontract.

ARTICLE 6 CONSTRUCTION BY OWNER OR BY SEPARATE CONTRACTORS

§ 6.1 Owner's Right to Perform Construction and to Award Separate Contracts

§ 6.1.1 The term "Separate Contractor(s)" shall mean other contractors retained by the Owner under separate agreements. The Owner reserves the right to perform construction or operations related to the Project with the Owner's own forces, and with Separate Contractors retained under Conditions of the Contract substantially similar to those of this Contract, including those provisions of the Conditions of the Contract related to insurance and waiver of subrogation.

§ 6.1.2 When separate contracts are awarded for different portions of the Project or other construction or operations on the site, the term "Contractor" in the Contract Documents in each case shall mean the Contractor who executes each separate Owner-Contractor Agreement.

§ 6.1.3 The Owner shall provide for coordination of the activities of the Owner's own forces and of each Separate Contractor with the Work of the Contractor, who shall cooperate with them. The Contractor shall participate with any Separate Contractors and the Owner in reviewing their construction schedules. The Contractor shall make any revisions to its construction schedule deemed necessary after a joint review and mutual agreement. The construction schedules shall then constitute the schedules to be used by the Contractor, Separate Contractors, and the Owner until subsequently revised.

§ 6.1.4 Unless otherwise provided in the Contract Documents, when the Owner performs construction or operations related to the Project with the Owner's own forces or with Separate Contractors, the Owner or its Separate Contractors shall have the same obligations and rights that the Contractor has under the Conditions of the Contract, including, without excluding others, those stated in Article 3, this Article 6, and Articles 10, 11, and 12.

§ 6.2 Mutual Responsibility

§ 6.2.1 The Contractor shall afford the Owner and Separate Contractors reasonable opportunity for introduction and storage of their materials and equipment and performance of their activities, and shall connect and coordinate the Contractor's construction and operations with theirs as required by the Contract Documents.

§ 6.2.2 If part of the Contractor's Work depends for proper execution or results upon construction or operations by the Owner or a Separate Contractor, the Contractor shall, prior to proceeding with that portion of the Work, promptly notify the Architect of apparent discrepancies or defects in the construction or operations by the Owner or Separate Contractor that would render it unsuitable for proper execution and results of the Contractor's Work. Failure of the Contractor to notify the Architect of apparent discrepancies or defects prior to proceeding with the Work shall constitute an acknowledgment that the Owner's or Separate Contractor's completed or partially completed construction is fit and proper to receive the Contractor's Work. The Contractor shall not be responsible for discrepancies or defects in the construction or operations by the Owner or Separate Contractor that are not apparent.

§ 6.2.3 The Contractor shall reimburse the Owner for costs the Owner incurs that are payable to a Separate Contractor because of the Contractor's delays, improperly timed activities or defective construction. The Owner shall be responsible to the Contractor for costs the Contractor incurs because of a Separate Contractor's delays, improperly timed activities, damage to the Work or defective construction.

AIA Document A201 – 2017. Copyright © 1911, 1915, 1918, 1925, 1937, 1951, 1958, 1961, 1963, 1966, 1970, 1976, 1987, 1997, 2007 and 2017. All rights reserved. "The American Institute of Architects," "American Institute of Architects," "AIA," the AIA Logo, and "AIA Contract Documents" are trademarks of The American Institute of Architects. This document was produced at 16:23:08 EST on 03/06/2025 under Subscription No.20240046071 which expires on 08/01/2025, is not for resale, is licensed for one-time use only, and may only be used in accordance with the AIA Contract Documents® Terms of Service. To report copyright violations, e-mail docinfo@aiacontracts.com.
User Notes: (67ca1160ac1df796e2d601b8)

§ 6.2.4 The Contractor shall promptly remedy damage that the Contractor wrongfully causes to completed or partially completed construction or to property of the Owner or Separate Contractor as provided in Section 10.2.5.

§ 6.2.5 The Owner and each Separate Contractor shall have the same responsibilities for cutting and patching as are described for the Contractor in Section 3.14.

§ 6.3 Owner's Right to Clean Up

If a dispute arises among the Contractor, Separate Contractors, and the Owner as to the responsibility under their respective contracts for maintaining the premises and surrounding area free from waste materials and rubbish, the Owner may clean up and the Architect will allocate the cost among those responsible.

ARTICLE 7 CHANGES IN THE WORK

§ 7.1 General

§ 7.1.1 Changes in the Work may be accomplished after execution of the Contract, and without invalidating the Contract, by Change Order, Construction Change Directive or order for a minor change in the Work, subject to the limitations stated in this Article 7 and elsewhere in the Contract Documents.

§ 7.1.2 A Change Order shall be based upon agreement among the Owner, Contractor, and Architect. A Construction Change Directive requires agreement by the Owner and Architect and may or may not be agreed to by the Contractor. An order for a minor change in the Work may be issued by the Architect alone.

§ 7.1.3 Changes in the Work shall be performed under applicable provisions of the Contract Documents. The Contractor shall proceed promptly with changes in the Work, unless otherwise provided in the Change Order, Construction Change Directive, or order for a minor change in the Work.

§ 7.2 Change Orders

§ 7.2.1 A Change Order is a written instrument prepared by the Architect and signed by the Owner, Contractor, and Architect stating their agreement upon all of the following:

- **.1** The change in the Work;
- **.2** The amount of the adjustment, if any, in the Contract Sum; and
- **.3** The extent of the adjustment, if any, in the Contract Time.

§ 7.3 Construction Change Directives

§ 7.3.1 A Construction Change Directive is a written order prepared by the Architect and signed by the Owner and Architect, directing a change in the Work prior to agreement on adjustment, if any, in the Contract Sum or Contract Time, or both. The Owner may by Construction Change Directive, without invalidating the Contract, order changes in the Work within the general scope of the Contract consisting of additions, deletions, or other revisions, the Contract Sum and Contract Time being adjusted accordingly.

§ 7.3.2 A Construction Change Directive shall be used in the absence of total agreement on the terms of a Change Order.

§ 7.3.3 If the Construction Change Directive provides for an adjustment to the Contract Sum, the adjustment shall be based on one of the following methods:

- **.1** Mutual acceptance of a lump sum properly itemized and supported by sufficient substantiating data to permit evaluation;
- **.2** Unit prices stated in the Contract Documents or subsequently agreed upon;
- **.3** Cost to be determined in a manner agreed upon by the parties and a mutually acceptable fixed or percentage fee; or
- **.4** As provided in Section 7.3.4.

§ 7.3.4 If the Contractor does not respond promptly or disagrees with the method for adjustment in the Contract Sum, the Architect shall determine the adjustment on the basis of reasonable expenditures and savings of those performing the Work attributable to the change, including, in case of an increase in the Contract Sum, an amount for overhead and profit as set forth in the Agreement, or if no such amount is set forth in the Agreement, a reasonable amount. In such case, and also under Section 7.3.3.3, the Contractor shall keep and present, in such form as the Architect may prescribe, an itemized accounting together with appropriate supporting data. Unless

AIA Document A201 – 2017. Copyright © 1911, 1915, 1918, 1925, 1937, 1951, 1958, 1961, 1963, 1966, 1970, 1976, 1987, 1997, 2007 and 2017. All rights reserved. "The American Institute of Architects," "American Institute of Architects," "AIA," the AIA Logo, and "AIA Contract Documents" are trademarks of The American Institute of Architects. This document was produced at 16:23:08 EST on 03/06/2025 under Subscription No.20240046071 which expires on 08/01/2025, is not for resale, is licensed for one-time use only, and may only be used in accordance with the AIA Contract Documents® Terms of Service. To report copyright violations, e-mail docinfo@aiacontracts.com.
User Notes: (67ca1160ac1df796e2d601b8)

otherwise provided in the Contract Documents, costs for the purposes of this Section 7.3.4 shall be limited to the following:

.1 Costs of labor, including applicable payroll taxes, fringe benefits required by agreement or custom, workers' compensation insurance, and other employee costs approved by the Architect;

.2 Costs of materials, supplies, and equipment, including cost of transportation, whether incorporated or consumed;

.3 Rental costs of machinery and equipment, exclusive of hand tools, whether rented from the Contractor or others;

.4 Costs of premiums for all bonds and insurance, permit fees, and sales, use, or similar taxes, directly related to the change; and

.5 Costs of supervision and field office personnel directly attributable to the change.

§ 7.3.5 If the Contractor disagrees with the adjustment in the Contract Time, the Contractor may make a Claim in accordance with applicable provisions of Article 15.

§ 7.3.6 Upon receipt of a Construction Change Directive, the Contractor shall promptly proceed with the change in the Work involved and advise the Architect of the Contractor's agreement or disagreement with the method, if any, provided in the Construction Change Directive for determining the proposed adjustment in the Contract Sum or Contract Time.

§ 7.3.7 A Construction Change Directive signed by the Contractor indicates the Contractor's agreement therewith, including adjustment in Contract Sum and Contract Time or the method for determining them. Such agreement shall be effective immediately and shall be recorded as a Change Order.

§ 7.3.8 The amount of credit to be allowed by the Contractor to the Owner for a deletion or change that results in a net decrease in the Contract Sum shall be actual net cost as confirmed by the Architect. When both additions and credits covering related Work or substitutions are involved in a change, the allowance for overhead and profit shall be figured on the basis of net increase, if any, with respect to that change.

§ 7.3.9 Pending final determination of the total cost of a Construction Change Directive to the Owner, the Contractor may request payment for Work completed under the Construction Change Directive in Applications for Payment. The Architect will make an interim determination for purposes of monthly certification for payment for those costs and certify for payment the amount that the Architect determines, in the Architect's professional judgment, to be reasonably justified. The Architect's interim determination of cost shall adjust the Contract Sum on the same basis as a Change Order, subject to the right of either party to disagree and assert a Claim in accordance with Article 15.

§ 7.3.10 When the Owner and Contractor agree with a determination made by the Architect concerning the adjustments in the Contract Sum and Contract Time, or otherwise reach agreement upon the adjustments, such agreement shall be effective immediately and the Architect will prepare a Change Order. Change Orders may be issued for all or any part of a Construction Change Directive.

§ 7.4 Minor Changes in the Work

The Architect may order minor changes in the Work that are consistent with the intent of the Contract Documents and do not involve an adjustment in the Contract Sum or an extension of the Contract Time. The Architect's order for minor changes shall be in writing. If the Contractor believes that the proposed minor change in the Work will affect the Contract Sum or Contract Time, the Contractor shall notify the Architect and shall not proceed to implement the change in the Work. If the Contractor performs the Work set forth in the Architect's order for a minor change without prior notice to the Architect that such change will affect the Contract Sum or Contract Time, the Contractor waives any adjustment to the Contract Sum or extension of the Contract Time.

ARTICLE 8 TIME

§ 8.1 Definitions

§ 8.1.1 Unless otherwise provided, Contract Time is the period of time, including authorized adjustments, allotted in the Contract Documents for Substantial Completion of the Work.

§ 8.1.2 The date of commencement of the Work is the date established in the Agreement.

AIA Document A201 – 2017. Copyright © 1911, 1915, 1918, 1925, 1937, 1951, 1958, 1961, 1963, 1966, 1970, 1976, 1987, 1997, 2007 and 2017. All rights reserved. "The American Institute of Architects," "American Institute of Architects," "AIA," the AIA Logo, and "AIA Contract Documents" are trademarks of The American Institute of Architects. This document was produced at 16:23:08 EST on 03/06/2025 under Subscription No.20240046071 which expires on 08/01/2025, is not for resale, is licensed for one-time use only, and may only be used in accordance with the AIA Contract Documents® Terms of Service. To report copyright violations, e-mail docinfo@aiacontracts.com.
User Notes: (67ca1160ac1df796e2d601b8)

§ 8.1.3 The date of Substantial Completion is the date certified by the Architect in accordance with Section 9.8.

§ 8.1.4 The term "day" as used in the Contract Documents shall mean calendar day unless otherwise specifically defined.

§ 8.2 Progress and Completion

§ 8.2.1 Time limits stated in the Contract Documents are of the essence of the Contract. By executing the Agreement, the Contractor confirms that the Contract Time is a reasonable period for performing the Work.

§ 8.2.2 The Contractor shall not knowingly, except by agreement or instruction of the Owner in writing, commence the Work prior to the effective date of insurance required to be furnished by the Contractor and Owner.

§ 8.2.3 The Contractor shall proceed expeditiously with adequate forces and shall achieve Substantial Completion within the Contract Time.

§ 8.3 Delays and Extensions of Time

§ 8.3.1 If the Contractor is delayed at any time in the commencement or progress of the Work by (1) an act or neglect of the Owner or Architect, of an employee of either, or of a Separate Contractor; (2) by changes ordered in the Work; (3) by labor disputes, fire, unusual delay in deliveries, unavoidable casualties, adverse weather conditions documented in accordance with Section 15.1.6.2, or other causes beyond the Contractor's control; (4) by delay authorized by the Owner pending mediation and binding dispute resolution; or (5) by other causes that the Contractor asserts, and the Architect determines, justify delay, then the Contract Time shall be extended for such reasonable time as the Architect may determine.

§ 8.3.2 Claims relating to time shall be made in accordance with applicable provisions of Article 15.

§ 8.3.3 This Section 8.3 does not preclude recovery of damages for delay by either party under other provisions of the Contract Documents.

ARTICLE 9 PAYMENTS AND COMPLETION

§ 9.1 Contract Sum

§ 9.1.1 The Contract Sum is stated in the Agreement and, including authorized adjustments, is the total amount payable by the Owner to the Contractor for performance of the Work under the Contract Documents.

§ 9.1.2 If unit prices are stated in the Contract Documents or subsequently agreed upon, and if quantities originally contemplated are materially changed so that application of such unit prices to the actual quantities causes substantial inequity to the Owner or Contractor, the applicable unit prices shall be equitably adjusted.

§ 9.2 Schedule of Values

Where the Contract is based on a stipulated sum or Guaranteed Maximum Price, the Contractor shall submit a schedule of values to the Architect before the first Application for Payment, allocating the entire Contract Sum to the various portions of the Work. The schedule of values shall be prepared in the form, and supported by the data to substantiate its accuracy, required by the Architect. This schedule, unless objected to by the Architect, shall be used as a basis for reviewing the Contractor's Applications for Payment. Any changes to the schedule of values shall be submitted to the Architect and supported by such data to substantiate its accuracy as the Architect may require, and unless objected to by the Architect, shall be used as a basis for reviewing the Contractor's subsequent Applications for Payment.

§ 9.3 Applications for Payment

§ 9.3.1 At least ten days before the date established for each progress payment, the Contractor shall submit to the Architect an itemized Application for Payment prepared in accordance with the schedule of values, if required under Section 9.2, for completed portions of the Work. The application shall be notarized, if required, and supported by all data substantiating the Contractor's right to payment that the Owner or Architect require, such as copies of requisitions, and releases and waivers of liens from Subcontractors and suppliers, and shall reflect retainage if provided for in the Contract Documents.

AIA Document A201 – 2017. Copyright © 1911, 1915, 1918, 1925, 1937, 1951, 1958, 1961, 1963, 1966, 1970, 1976, 1987, 1997, 2007 and 2017. All rights reserved. "The American Institute of Architects," "American Institute of Architects," "AIA," the AIA Logo, and "AIA Contract Documents" are trademarks of The American Institute of Architects. This document was produced at 16:23:08 EST on 03/06/2025 under Subscription No.20240046071 which expires on 08/01/2025, is not for resale, is licensed for one-time use only, and may only be used in accordance with the AIA Contract Documents® Terms of Service. To report copyright violations, e-mail docinfo@aiacontracts.com.
User Notes: (67ca1160ac1df796e2d601b8)

§ 9.3.1.1 As provided in Section 7.3.9, such applications may include requests for payment on account of changes in the Work that have been properly authorized by Construction Change Directives, or by interim determinations of the Architect, but not yet included in Change Orders.

§ 9.3.1.2 Applications for Payment shall not include requests for payment for portions of the Work for which the Contractor does not intend to pay a Subcontractor or supplier, unless such Work has been performed by others whom the Contractor intends to pay.

§ 9.3.2 Unless otherwise provided in the Contract Documents, payments shall be made on account of materials and equipment delivered and suitably stored at the site for subsequent incorporation in the Work. If approved in advance by the Owner, payment may similarly be made for materials and equipment suitably stored off the site at a location agreed upon in writing. Payment for materials and equipment stored on or off the site shall be conditioned upon compliance by the Contractor with procedures satisfactory to the Owner to establish the Owner's title to such materials and equipment or otherwise protect the Owner's interest, and shall include the costs of applicable insurance, storage, and transportation to the site, for such materials and equipment stored off the site.

§ 9.3.3 The Contractor warrants that title to all Work covered by an Application for Payment will pass to the Owner no later than the time of payment. The Contractor further warrants that upon submittal of an Application for Payment all Work for which Certificates for Payment have been previously issued and payments received from the Owner shall, to the best of the Contractor's knowledge, information, and belief, be free and clear of liens, claims, security interests, or encumbrances, in favor of the Contractor, Subcontractors, suppliers, or other persons or entities that provided labor, materials, and equipment relating to the Work.

§ 9.4 Certificates for Payment

§ 9.4.1 The Architect will, within seven days after receipt of the Contractor's Application for Payment, either (1) issue to the Owner a Certificate for Payment in the full amount of the Application for Payment, with a copy to the Contractor; or (2) issue to the Owner a Certificate for Payment for such amount as the Architect determines is properly due, and notify the Contractor and Owner of the Architect's reasons for withholding certification in part as provided in Section 9.5.1; or (3) withhold certification of the entire Application for Payment, and notify the Contractor and Owner of the Architect's reason for withholding certification in whole as provided in Section 9.5.1.

§ 9.4.2 The issuance of a Certificate for Payment will constitute a representation by the Architect to the Owner, based on the Architect's evaluation of the Work and the data in the Application for Payment, that, to the best of the Architect's knowledge, information, and belief, the Work has progressed to the point indicated, the quality of the Work is in accordance with the Contract Documents, and that the Contractor is entitled to payment in the amount certified. The foregoing representations are subject to an evaluation of the Work for conformance with the Contract Documents upon Substantial Completion, to results of subsequent tests and inspections, to correction of minor deviations from the Contract Documents prior to completion, and to specific qualifications expressed by the Architect. However, the issuance of a Certificate for Payment will not be a representation that the Architect has (1) made exhaustive or continuous on-site inspections to check the quality or quantity of the Work; (2) reviewed construction means, methods, techniques, sequences, or procedures; (3) reviewed copies of requisitions received from Subcontractors and suppliers and other data requested by the Owner to substantiate the Contractor's right to payment; or (4) made examination to ascertain how or for what purpose the Contractor has used money previously paid on account of the Contract Sum.

§ 9.5 Decisions to Withhold Certification

§ 9.5.1 The Architect may withhold a Certificate for Payment in whole or in part, to the extent reasonably necessary to protect the Owner, if in the Architect's opinion the representations to the Owner required by Section 9.4.2 cannot be made. If the Architect is unable to certify payment in the amount of the Application, the Architect will notify the Contractor and Owner as provided in Section 9.4.1. If the Contractor and Architect cannot agree on a revised amount, the Architect will promptly issue a Certificate for Payment for the amount for which the Architect is able to make such representations to the Owner. The Architect may also withhold a Certificate for Payment or, because of subsequently discovered evidence, may nullify the whole or a part of a Certificate for Payment previously issued, to such extent as may be necessary in the Architect's opinion to protect the Owner from loss for which the Contractor is responsible, including loss resulting from acts and omissions described in Section 3.3.2, because of

AIA Document A201 – 2017. Copyright © 1911, 1915, 1918, 1925, 1937, 1951, 1958, 1961, 1963, 1966, 1970, 1976, 1987, 1997, 2007 and 2017. All rights reserved. "The American Institute of Architects," "American Institute of Architects," "AIA," the AIA Logo, and "AIA Contract Documents" are trademarks of The American Institute of Architects. This document was produced at 16:23:08 EST on 03/06/2025 under Subscription No.20240046071 which expires on 08/01/2025, is not for resale, is licensed for one-time use only, and may only be used in accordance with the AIA Contract Documents® Terms of Service. To report copyright violations, e-mail docinfo@aiacontracts.com.
User Notes: (67ca1160ac1df796e2d601b8)

.1 defective Work not remedied;
.2 third party claims filed or reasonable evidence indicating probable filing of such claims, unless security acceptable to the Owner is provided by the Contractor;
.3 failure of the Contractor to make payments properly to Subcontractors or suppliers for labor, materials or equipment;
.4 reasonable evidence that the Work cannot be completed for the unpaid balance of the Contract Sum;
.5 damage to the Owner or a Separate Contractor;
.6 reasonable evidence that the Work will not be completed within the Contract Time, and that the unpaid balance would not be adequate to cover actual or liquidated damages for the anticipated delay; or
.7 repeated failure to carry out the Work in accordance with the Contract Documents.

§ 9.5.2 When either party disputes the Architect's decision regarding a Certificate for Payment under Section 9.5.1, in whole or in part, that party may submit a Claim in accordance with Article 15.

§ 9.5.3 When the reasons for withholding certification are removed, certification will be made for amounts previously withheld.

§ 9.5.4 If the Architect withholds certification for payment under Section 9.5.1.3, the Owner may, at its sole option, issue joint checks to the Contractor and to any Subcontractor or supplier to whom the Contractor failed to make payment for Work properly performed or material or equipment suitably delivered. If the Owner makes payments by joint check, the Owner shall notify the Architect and the Contractor shall reflect such payment on its next Application for Payment.

§ 9.6 Progress Payments

§ 9.6.1 After the Architect has issued a Certificate for Payment, the Owner shall make payment in the manner and within the time provided in the Contract Documents, and shall so notify the Architect.

§ 9.6.2 The Contractor shall pay each Subcontractor, no later than seven days after receipt of payment from the Owner, the amount to which the Subcontractor is entitled, reflecting percentages actually retained from payments to the Contractor on account of the Subcontractor's portion of the Work. The Contractor shall, by appropriate agreement with each Subcontractor, require each Subcontractor to make payments to Sub-subcontractors in a similar manner.

§ 9.6.3 The Architect will, on request, furnish to a Subcontractor, if practicable, information regarding percentages of completion or amounts applied for by the Contractor and action taken thereon by the Architect and Owner on account of portions of the Work done by such Subcontractor.

§ 9.6.4 The Owner has the right to request written evidence from the Contractor that the Contractor has properly paid Subcontractors and suppliers amounts paid by the Owner to the Contractor for subcontracted Work. If the Contractor fails to furnish such evidence within seven days, the Owner shall have the right to contact Subcontractors and suppliers to ascertain whether they have been properly paid. Neither the Owner nor Architect shall have an obligation to pay, or to see to the payment of money to, a Subcontractor or supplier, except as may otherwise be required by law.

§ 9.6.5 The Contractor's payments to suppliers shall be treated in a manner similar to that provided in Sections 9.6.2, 9.6.3 and 9.6.4.

§ 9.6.6 A Certificate for Payment, a progress payment, or partial or entire use or occupancy of the Project by the Owner shall not constitute acceptance of Work not in accordance with the Contract Documents.

§ 9.6.7 Unless the Contractor provides the Owner with a payment bond in the full penal sum of the Contract Sum, payments received by the Contractor for Work properly performed by Subcontractors or provided by suppliers shall be held by the Contractor for those Subcontractors or suppliers who performed Work or furnished materials, or both, under contract with the Contractor for which payment was made by the Owner. Nothing contained herein shall require money to be placed in a separate account and not commingled with money of the Contractor, create any fiduciary liability or tort liability on the part of the Contractor for breach of trust, or entitle any person or

AIA Document A201 – 2017. Copyright © 1911, 1915, 1918, 1925, 1937, 1951, 1958, 1961, 1963, 1966, 1970, 1976, 1987, 1997, 2007 and 2017. All rights reserved. "The American Institute of Architects," "American Institute of Architects," "AIA," the AIA Logo, and "AIA Contract Documents" are trademarks of The American Institute of Architects. This document was produced at 16:23:08 EST on 03/06/2025 under Subscription No.20240046071 which expires on 08/01/2025, is not for resale, is licensed for one-time use only, and may only be used in accordance with the AIA Contract Documents® Terms of Service. To report copyright violations, e-mail docinfo@aiacontracts.com.
User Notes: (67ca1160ac1df796e2d601b8)

entity to an award of punitive damages against the Contractor for breach of the requirements of this provision.

§ 9.6.8 Provided the Owner has fulfilled its payment obligations under the Contract Documents, the Contractor shall defend and indemnify the Owner from all loss, liability, damage or expense, including reasonable attorney's fees and litigation expenses, arising out of any lien claim or other claim for payment by any Subcontractor or supplier of any tier. Upon receipt of notice of a lien claim or other claim for payment, the Owner shall notify the Contractor. If approved by the applicable court, when required, the Contractor may substitute a surety bond for the property against which the lien or other claim for payment has been asserted.

§ 9.7 Failure of Payment

If the Architect does not issue a Certificate for Payment, through no fault of the Contractor, within seven days after receipt of the Contractor's Application for Payment, or if the Owner does not pay the Contractor within seven days after the date established in the Contract Documents, the amount certified by the Architect or awarded by binding dispute resolution, then the Contractor may, upon seven additional days' notice to the Owner and Architect, stop the Work until payment of the amount owing has been received. The Contract Time shall be extended appropriately and the Contract Sum shall be increased by the amount of the Contractor's reasonable costs of shutdown, delay and start-up, plus interest as provided for in the Contract Documents.

§ 9.8 Substantial Completion

§ 9.8.1 Substantial Completion is the stage in the progress of the Work when the Work or designated portion thereof is sufficiently complete in accordance with the Contract Documents so that the Owner can occupy or utilize the Work for its intended use.

§ 9.8.2 When the Contractor considers that the Work, or a portion thereof which the Owner agrees to accept separately, is substantially complete, the Contractor shall prepare and submit to the Architect a comprehensive list of items to be completed or corrected prior to final payment. Failure to include an item on such list does not alter the responsibility of the Contractor to complete all Work in accordance with the Contract Documents.

§ 9.8.3 Upon receipt of the Contractor's list, the Architect will make an inspection to determine whether the Work or designated portion thereof is substantially complete. If the Architect's inspection discloses any item, whether or not included on the Contractor's list, which is not sufficiently complete in accordance with the Contract Documents so that the Owner can occupy or utilize the Work or designated portion thereof for its intended use, the Contractor shall, before issuance of the Certificate of Substantial Completion, complete or correct such item upon notification by the Architect. In such case, the Contractor shall then submit a request for another inspection by the Architect to determine Substantial Completion.

§ 9.8.4 When the Work or designated portion thereof is substantially complete, the Architect will prepare a Certificate of Substantial Completion that shall establish the date of Substantial Completion; establish responsibilities of the Owner and Contractor for security, maintenance, heat, utilities, damage to the Work and insurance; and fix the time within which the Contractor shall finish all items on the list accompanying the Certificate. Warranties required by the Contract Documents shall commence on the date of Substantial Completion of the Work or designated portion thereof unless otherwise provided in the Certificate of Substantial Completion.

§ 9.8.5 The Certificate of Substantial Completion shall be submitted to the Owner and Contractor for their written acceptance of responsibilities assigned to them in the Certificate. Upon such acceptance, and consent of surety if any, the Owner shall make payment of retainage applying to the Work or designated portion thereof. Such payment shall be adjusted for Work that is incomplete or not in accordance with the requirements of the Contract Documents.

§ 9.9 Partial Occupancy or Use

§ 9.9.1 The Owner may occupy or use any completed or partially completed portion of the Work at any stage when such portion is designated by separate agreement with the Contractor, provided such occupancy or use is consented to by the insurer and authorized by public authorities having jurisdiction over the Project. Such partial occupancy or use may commence whether or not the portion is substantially complete, provided the Owner and Contractor have accepted in writing the responsibilities assigned to each of them for payments, retainage, if any, security, maintenance, heat, utilities, damage to the Work and insurance, and have agreed in writing concerning the period for correction of the Work and commencement of warranties required by the Contract Documents.

AIA Document A201 – 2017. Copyright © 1911, 1915, 1918, 1925, 1937, 1951, 1958, 1961, 1963, 1966, 1970, 1976, 1987, 1997, 2007 and 2017. All rights reserved. "The American Institute of Architects," "American Institute of Architects," "AIA," the AIA Logo, and "AIA Contract Documents" are trademarks of The American Institute of Architects. This document was produced at 16:23:08 EST on 03/06/2025 under Subscription No.20240046071 which expires on 08/01/2025, is not for resale, is licensed for one-time use only, and may only be used in accordance with the AIA Contract Documents® Terms of Service. To report copyright violations, e-mail docinfo@aiacontracts.com.
User Notes: (67ca1160ac1df796e2d601b8)

When the Contractor considers a portion substantially complete, the Contractor shall prepare and submit a list to the Architect as provided under Section 9.8.2. Consent of the Contractor to partial occupancy or use shall not be unreasonably withheld. The stage of the progress of the Work shall be determined by written agreement between the Owner and Contractor or, if no agreement is reached, by decision of the Architect.

§ 9.9.2 Immediately prior to such partial occupancy or use, the Owner, Contractor, and Architect shall jointly inspect the area to be occupied or portion of the Work to be used in order to determine and record the condition of the Work.

§ 9.9.3 Unless otherwise agreed upon, partial occupancy or use of a portion or portions of the Work shall not constitute acceptance of Work not complying with the requirements of the Contract Documents.

§ 9.10 Final Completion and Final Payment

§ 9.10.1 Upon receipt of the Contractor's notice that the Work is ready for final inspection and acceptance and upon receipt of a final Application for Payment, the Architect will promptly make such inspection. When the Architect finds the Work acceptable under the Contract Documents and the Contract fully performed, the Architect will promptly issue a final Certificate for Payment stating that to the best of the Architect's knowledge, information and belief, and on the basis of the Architect's on-site visits and inspections, the Work has been completed in accordance with the Contract Documents and that the entire balance found to be due the Contractor and noted in the final Certificate is due and payable. The Architect's final Certificate for Payment will constitute a further representation that conditions listed in Section 9.10.2 as precedent to the Contractor's being entitled to final payment have been fulfilled.

§ 9.10.2 Neither final payment nor any remaining retained percentage shall become due until the Contractor submits to the Architect (1) an affidavit that payrolls, bills for materials and equipment, and other indebtedness connected with the Work for which the Owner or the Owner's property might be responsible or encumbered (less amounts withheld by Owner) have been paid or otherwise satisfied, (2) a certificate evidencing that insurance required by the Contract Documents to remain in force after final payment is currently in effect, (3) a written statement that the Contractor knows of no reason that the insurance will not be renewable to cover the period required by the Contract Documents, (4) consent of surety, if any, to final payment, (5) documentation of any special warranties, such as manufacturers' warranties or specific Subcontractor warranties, and (6) if required by the Owner, other data establishing payment or satisfaction of obligations, such as receipts and releases and waivers of liens, claims, security interests, or encumbrances arising out of the Contract, to the extent and in such form as may be designated by the Owner. If a Subcontractor refuses to furnish a release or waiver required by the Owner, the Contractor may furnish a bond satisfactory to the Owner to indemnify the Owner against such lien, claim, security interest, or encumbrance. If a lien, claim, security interest, or encumbrance remains unsatisfied after payments are made, the Contractor shall refund to the Owner all money that the Owner may be compelled to pay in discharging the lien, claim, security interest, or encumbrance, including all costs and reasonable attorneys' fees.

§ 9.10.3 If, after Substantial Completion of the Work, final completion thereof is materially delayed through no fault of the Contractor or by issuance of Change Orders affecting final completion, and the Architect so confirms, the Owner shall, upon application by the Contractor and certification by the Architect, and without terminating the Contract, make payment of the balance due for that portion of the Work fully completed, corrected, and accepted. If the remaining balance for Work not fully completed or corrected is less than retainage stipulated in the Contract Documents, and if bonds have been furnished, the written consent of the surety to payment of the balance due for that portion of the Work fully completed and accepted shall be submitted by the Contractor to the Architect prior to certification of such payment. Such payment shall be made under terms and conditions governing final payment, except that it shall not constitute a waiver of Claims.

§ 9.10.4 The making of final payment shall constitute a waiver of Claims by the Owner except those arising from

- **.1** liens, Claims, security interests, or encumbrances arising out of the Contract and unsettled;
- **.2** failure of the Work to comply with the requirements of the Contract Documents;
- **.3** terms of special warranties required by the Contract Documents; or
- **.4** audits performed by the Owner, if permitted by the Contract Documents, after final payment.

§ 9.10.5 Acceptance of final payment by the Contractor, a Subcontractor, or a supplier, shall constitute a waiver of claims by that payee except those previously made in writing and identified by that payee as unsettled at the time of final Application for Payment.

AIA Document A201 – 2017. Copyright © 1911, 1915, 1918, 1925, 1937, 1951, 1958, 1961, 1963, 1966, 1970, 1976, 1987, 1997, 2007 and 2017. All rights reserved. "The American Institute of Architects," "American Institute of Architects," "AIA," the AIA Logo, and "AIA Contract Documents" are trademarks of The American Institute of Architects. This document was produced at 16:23:08 EST on 03/06/2025 under Subscription No.20240046071 which expires on 08/01/2025, is not for resale, is licensed for one-time use only, and may only be used in accordance with the AIA Contract Documents® Terms of Service. To report copyright violations, e-mail docinfo@aiacontracts.com.
User Notes: (67ca1160ac1df796e2d601b8)

ARTICLE 10 PROTECTION OF PERSONS AND PROPERTY

§ 10.1 Safety Precautions and Programs

The Contractor shall be responsible for initiating, maintaining, and supervising all safety precautions and programs in connection with the performance of the Contract.

§ 10.2 Safety of Persons and Property

§ 10.2.1 The Contractor shall take reasonable precautions for safety of, and shall provide reasonable protection to prevent damage, injury, or loss to

.1 employees on the Work and other persons who may be affected thereby;

.2 the Work and materials and equipment to be incorporated therein, whether in storage on or off the site, under care, custody, or control of the Contractor, a Subcontractor, or a Sub-subcontractor; and

.3 other property at the site or adjacent thereto, such as trees, shrubs, lawns, walks, pavements, roadways, structures, and utilities not designated for removal, relocation, or replacement in the course of construction.

§ 10.2.2 The Contractor shall comply with, and give notices required by applicable laws, statutes, ordinances, codes, rules and regulations, and lawful orders of public authorities, bearing on safety of persons or property or their protection from damage, injury, or loss.

§ 10.2.3 The Contractor shall implement, erect, and maintain, as required by existing conditions and performance of the Contract, reasonable safeguards for safety and protection, including posting danger signs and other warnings against hazards; promulgating safety regulations; and notifying the owners and users of adjacent sites and utilities of the safeguards.

§ 10.2.4 When use or storage of explosives or other hazardous materials or equipment, or unusual methods are necessary for execution of the Work, the Contractor shall exercise utmost care and carry on such activities under supervision of properly qualified personnel.

§ 10.2.5 The Contractor shall promptly remedy damage and loss (other than damage or loss insured under property insurance required by the Contract Documents) to property referred to in Sections 10.2.1.2 and 10.2.1.3 caused in whole or in part by the Contractor, a Subcontractor, a Sub-subcontractor, or anyone directly or indirectly employed by any of them, or by anyone for whose acts they may be liable and for which the Contractor is responsible under Sections 10.2.1.2 and 10.2.1.3. The Contractor may make a Claim for the cost to remedy the damage or loss to the extent such damage or loss is attributable to acts or omissions of the Owner or Architect or anyone directly or indirectly employed by either of them, or by anyone for whose acts either of them may be liable, and not attributable to the fault or negligence of the Contractor. The foregoing obligations of the Contractor are in addition to the Contractor's obligations under Section 3.18.

§ 10.2.6 The Contractor shall designate a responsible member of the Contractor's organization at the site whose duty shall be the prevention of accidents. This person shall be the Contractor's superintendent unless otherwise designated by the Contractor in writing to the Owner and Architect.

§ 10.2.7 The Contractor shall not permit any part of the construction or site to be loaded so as to cause damage or create an unsafe condition.

§ 10.2.8 Injury or Damage to Person or Property

If either party suffers injury or damage to person or property because of an act or omission of the other party, or of others for whose acts such party is legally responsible, notice of the injury or damage, whether or not insured, shall be given to the other party within a reasonable time not exceeding 21 days after discovery. The notice shall provide sufficient detail to enable the other party to investigate the matter.

§ 10.3 Hazardous Materials and Substances

§ 10.3.1 The Contractor is responsible for compliance with any requirements included in the Contract Documents regarding hazardous materials or substances. If the Contractor encounters a hazardous material or substance not addressed in the Contract Documents and if reasonable precautions will be inadequate to prevent foreseeable bodily injury or death to persons resulting from a material or substance, including but not limited to asbestos or

AIA Document A201 – 2017. Copyright © 1911, 1915, 1918, 1925, 1937, 1951, 1958, 1961, 1963, 1966, 1970, 1976, 1987, 1997, 2007 and 2017. All rights reserved. "The American Institute of Architects," "American Institute of Architects," "AIA," the AIA Logo, and "AIA Contract Documents" are trademarks of The American Institute of Architects. This document was produced at 16:23:08 EST on 03/06/2025 under Subscription No.20240046071 which expires on 08/01/2025, is not for resale, is licensed for one-time use only, and may only be used in accordance with the AIA Contract Documents® Terms of Service. To report copyright violations, e-mail docinfo@aiacontracts.com.
User Notes: (67ca1160ac1df796e2d601b8)

polychlorinated biphenyl (PCB), encountered on the site by the Contractor, the Contractor shall, upon recognizing the condition, immediately stop Work in the affected area and notify the Owner and Architect of the condition.

§ 10.3.2 Upon receipt of the Contractor's notice, the Owner shall obtain the services of a licensed laboratory to verify the presence or absence of the material or substance reported by the Contractor and, in the event such material or substance is found to be present, to cause it to be rendered harmless. Unless otherwise required by the Contract Documents, the Owner shall furnish in writing to the Contractor and Architect the names and qualifications of persons or entities who are to perform tests verifying the presence or absence of the material or substance or who are to perform the task of removal or safe containment of the material or substance. The Contractor and the Architect will promptly reply to the Owner in writing stating whether or not either has reasonable objection to the persons or entities proposed by the Owner. If either the Contractor or Architect has an objection to a person or entity proposed by the Owner, the Owner shall propose another to whom the Contractor and the Architect have no reasonable objection. When the material or substance has been rendered harmless, Work in the affected area shall resume upon written agreement of the Owner and Contractor. By Change Order, the Contract Time shall be extended appropriately and the Contract Sum shall be increased by the amount of the Contractor's reasonable additional costs of shutdown, delay, and start-up.

§ 10.3.3 To the fullest extent permitted by law, the Owner shall indemnify and hold harmless the Contractor, Subcontractors, Architect, Architect's consultants, and agents and employees of any of them from and against claims, damages, losses, and expenses, including but not limited to attorneys' fees, arising out of or resulting from performance of the Work in the affected area if in fact the material or substance presents the risk of bodily injury or death as described in Section 10.3.1 and has not been rendered harmless, provided that such claim, damage, loss, or expense is attributable to bodily injury, sickness, disease or death, or to injury to or destruction of tangible property (other than the Work itself), except to the extent that such damage, loss, or expense is due to the fault or negligence of the party seeking indemnity.

§ 10.3.4 The Owner shall not be responsible under this Section 10.3 for hazardous materials or substances the Contractor brings to the site unless such materials or substances are required by the Contract Documents. The Owner shall be responsible for hazardous materials or substances required by the Contract Documents, except to the extent of the Contractor's fault or negligence in the use and handling of such materials or substances.

§ 10.3.5 The Contractor shall reimburse the Owner for the cost and expense the Owner incurs (1) for remediation of hazardous materials or substances the Contractor brings to the site and negligently handles, or (2) where the Contractor fails to perform its obligations under Section 10.3.1, except to the extent that the cost and expense are due to the Owner's fault or negligence.

§ 10.3.6 If, without negligence on the part of the Contractor, the Contractor is held liable by a government agency for the cost of remediation of a hazardous material or substance solely by reason of performing Work as required by the Contract Documents, the Owner shall reimburse the Contractor for all cost and expense thereby incurred.

§ 10.4 Emergencies

In an emergency affecting safety of persons or property, the Contractor shall act, at the Contractor's discretion, to prevent threatened damage, injury, or loss. Additional compensation or extension of time claimed by the Contractor on account of an emergency shall be determined as provided in Article 15 and Article 7.

ARTICLE 11 INSURANCE AND BONDS

§ 11.1 Contractor's Insurance and Bonds

§ 11.1.1 The Contractor shall purchase and maintain insurance of the types and limits of liability, containing the endorsements, and subject to the terms and conditions, as described in the Agreement or elsewhere in the Contract Documents. The Contractor shall purchase and maintain the required insurance from an insurance company or insurance companies lawfully authorized to issue insurance in the jurisdiction where the Project is located. The Owner, Architect, and Architect's consultants shall be named as additional insureds under the Contractor's commercial general liability policy or as otherwise described in the Contract Documents.

§ 11.1.2 The Contractor shall provide surety bonds of the types, for such penal sums, and subject to such terms and conditions as required by the Contract Documents. The Contractor shall purchase and maintain the required bonds from a company or companies lawfully authorized to issue surety bonds in the jurisdiction where the Project is located.

AIA Document A201 – 2017. Copyright © 1911, 1915, 1918, 1925, 1937, 1951, 1958, 1961, 1963, 1966, 1970, 1976, 1987, 1997, 2007 and 2017. All rights reserved. "The American Institute of Architects," "American Institute of Architects," "AIA," the AIA Logo, and "AIA Contract Documents" are trademarks of The American Institute of Architects. This document was produced at 16:23:08 EST on 03/06/2025 under Subscription No.20240046071 which expires on 08/01/2025, is not for resale, is licensed for one-time use only, and may only be used in accordance with the AIA Contract Documents® Terms of Service. To report copyright violations, e-mail docinfo@aiacontracts.com.
User Notes: (67ca1160ac1df796e2d601b8)

§ 11.1.3 Upon the request of any person or entity appearing to be a potential beneficiary of bonds covering payment of obligations arising under the Contract, the Contractor shall promptly furnish a copy of the bonds or shall authorize a copy to be furnished.

§ 11.1.4 Notice of Cancellation or Expiration of Contractor's Required Insurance. Within three (3) business days of the date the Contractor becomes aware of an impending or actual cancellation or expiration of any insurance required by the Contract Documents, the Contractor shall provide notice to the Owner of such impending or actual cancellation or expiration. Upon receipt of notice from the Contractor, the Owner shall, unless the lapse in coverage arises from an act or omission of the Owner, have the right to stop the Work until the lapse in coverage has been cured by the procurement of replacement coverage by the Contractor. The furnishing of notice by the Contractor shall not relieve the Contractor of any contractual obligation to provide any required coverage.

§ 11.2 Owner's Insurance

§ 11.2.1 The Owner shall purchase and maintain insurance of the types and limits of liability, containing the endorsements, and subject to the terms and conditions, as described in the Agreement or elsewhere in the Contract Documents. The Owner shall purchase and maintain the required insurance from an insurance company or insurance companies lawfully authorized to issue insurance in the jurisdiction where the Project is located.

§ 11.2.2 Failure to Purchase Required Property Insurance. If the Owner fails to purchase and maintain the required property insurance, with all of the coverages and in the amounts described in the Agreement or elsewhere in the Contract Documents, the Owner shall inform the Contractor in writing prior to commencement of the Work. Upon receipt of notice from the Owner, the Contractor may delay commencement of the Work and may obtain insurance that will protect the interests of the Contractor, Subcontractors, and Sub-Subcontractors in the Work. When the failure to provide coverage has been cured or resolved, the Contract Sum and Contract Time shall be equitably adjusted. In the event the Owner fails to procure coverage, the Owner waives all rights against the Contractor, Subcontractors, and Sub-subcontractors to the extent the loss to the Owner would have been covered by the insurance to have been procured by the Owner. The cost of the insurance shall be charged to the Owner by a Change Order. If the Owner does not provide written notice, and the Contractor is damaged by the failure or neglect of the Owner to purchase or maintain the required insurance, the Owner shall reimburse the Contractor for all reasonable costs and damages attributable thereto.

§ 11.2.3 Notice of Cancellation or Expiration of Owner's Required Property Insurance. Within three (3) business days of the date the Owner becomes aware of an impending or actual cancellation or expiration of any property insurance required by the Contract Documents, the Owner shall provide notice to the Contractor of such impending or actual cancellation or expiration. Unless the lapse in coverage arises from an act or omission of the Contractor: (1) the Contractor, upon receipt of notice from the Owner, shall have the right to stop the Work until the lapse in coverage has been cured by the procurement of replacement coverage by either the Owner or the Contractor; (2) the Contract Time and Contract Sum shall be equitably adjusted; and (3) the Owner waives all rights against the Contractor, Subcontractors, and Sub-subcontractors to the extent any loss to the Owner would have been covered by the insurance had it not expired or been cancelled. If the Contractor purchases replacement coverage, the cost of the insurance shall be charged to the Owner by an appropriate Change Order. The furnishing of notice by the Owner shall not relieve the Owner of any contractual obligation to provide required insurance.

§ 11.3 Waivers of Subrogation

§ 11.3.1 The Owner and Contractor waive all rights against (1) each other and any of their subcontractors, sub-subcontractors, agents, and employees, each of the other; (2) the Architect and Architect's consultants; and (3) Separate Contractors, if any, and any of their subcontractors, sub-subcontractors, agents, and employees, for damages caused by fire, or other causes of loss, to the extent those losses are covered by property insurance required by the Agreement or other property insurance applicable to the Project, except such rights as they have to proceeds of such insurance. The Owner or Contractor, as appropriate, shall require similar written waivers in favor of the individuals and entities identified above from the Architect, Architect's consultants, Separate Contractors, subcontractors, and sub-subcontractors. The policies of insurance purchased and maintained by each person or entity agreeing to waive claims pursuant to this section 11.3.1 shall not prohibit this waiver of subrogation. This waiver of subrogation shall be effective as to a person or entity (1) even though that person or entity would otherwise have a duty of indemnification, contractual or otherwise, (2) even though that person or entity did not pay the insurance premium directly or indirectly, or (3) whether or not the person or entity had an insurable interest in the damaged property.

AIA Document A201 – 2017. Copyright © 1911, 1915, 1918, 1925, 1937, 1951, 1958, 1961, 1963, 1966, 1970, 1976, 1987, 1997, 2007 and 2017. All rights reserved. "The American Institute of Architects," "American Institute of Architects," "AIA," the AIA Logo, and "AIA Contract Documents" are trademarks of The American Institute of Architects. This document was produced at 16:23:08 EST on 03/06/2025 under Subscription No.20240046071 which expires on 08/01/2025, is not for resale, is licensed for one-time use only, and may only be used in accordance with the AIA Contract Documents® Terms of Service. To report copyright violations, e-mail docinfo@aiacontracts.com.
User Notes: (67ca1160ac1df796e2d601b8)

§ 11.3.2 If during the Project construction period the Owner insures properties, real or personal or both, at or adjacent to the site by property insurance under policies separate from those insuring the Project, or if after final payment property insurance is to be provided on the completed Project through a policy or policies other than those insuring the Project during the construction period, to the extent permissible by such policies, the Owner waives all rights in accordance with the terms of Section 11.3.1 for damages caused by fire or other causes of loss covered by this separate property insurance.

§ 11.4 Loss of Use, Business Interruption, and Delay in Completion Insurance

The Owner, at the Owner's option, may purchase and maintain insurance that will protect the Owner against loss of use of the Owner's property, or the inability to conduct normal operations, due to fire or other causes of loss. The Owner waives all rights of action against the Contractor and Architect for loss of use of the Owner's property, due to fire or other hazards however caused.

§11.5 Adjustment and Settlement of Insured Loss

§ 11.5.1 A loss insured under the property insurance required by the Agreement shall be adjusted by the Owner as fiduciary and made payable to the Owner as fiduciary for the insureds, as their interests may appear, subject to requirements of any applicable mortgagee clause and of Section 11.5.2. The Owner shall pay the Architect and Contractor their just shares of insurance proceeds received by the Owner, and by appropriate agreements the Architect and Contractor shall make payments to their consultants and Subcontractors in similar manner.

§ 11.5.2 Prior to settlement of an insured loss, the Owner shall notify the Contractor of the terms of the proposed settlement as well as the proposed allocation of the insurance proceeds. The Contractor shall have 14 days from receipt of notice to object to the proposed settlement or allocation of the proceeds. If the Contractor does not object, the Owner shall settle the loss and the Contractor shall be bound by the settlement and allocation. Upon receipt, the Owner shall deposit the insurance proceeds in a separate account and make the appropriate distributions. Thereafter, if no other agreement is made or the Owner does not terminate the Contract for convenience, the Owner and Contractor shall execute a Change Order for reconstruction of the damaged or destroyed Work in the amount allocated for that purpose. If the Contractor timely objects to either the terms of the proposed settlement or the allocation of the proceeds, the Owner may proceed to settle the insured loss, and any dispute between the Owner and Contractor arising out of the settlement or allocation of the proceeds shall be resolved pursuant to Article 15. Pending resolution of any dispute, the Owner may issue a Construction Change Directive for the reconstruction of the damaged or destroyed Work.

ARTICLE 12 UNCOVERING AND CORRECTION OF WORK

§ 12.1 Uncovering of Work

§ 12.1.1 If a portion of the Work is covered contrary to the Architect's request or to requirements specifically expressed in the Contract Documents, it must, if requested in writing by the Architect, be uncovered for the Architect's examination and be replaced at the Contractor's expense without change in the Contract Time.

§ 12.1.2 If a portion of the Work has been covered that the Architect has not specifically requested to examine prior to its being covered, the Architect may request to see such Work and it shall be uncovered by the Contractor. If such Work is in accordance with the Contract Documents, the Contractor shall be entitled to an equitable adjustment to the Contract Sum and Contract Time as may be appropriate. If such Work is not in accordance with the Contract Documents, the costs of uncovering the Work, and the cost of correction, shall be at the Contractor's expense.

§ 12.2 Correction of Work

§ 12.2.1 Before Substantial Completion

The Contractor shall promptly correct Work rejected by the Architect or failing to conform to the requirements of the Contract Documents, discovered before Substantial Completion and whether or not fabricated, installed or completed. Costs of correcting such rejected Work, including additional testing and inspections, the cost of uncovering and replacement, and compensation for the Architect's services and expenses made necessary thereby, shall be at the Contractor's expense.

§ 12.2.2 After Substantial Completion

§ 12.2.2.1 In addition to the Contractor's obligations under Section 3.5, if, within one year after the date of Substantial Completion of the Work or designated portion thereof or after the date for commencement of warranties established under Section 9.9.1, or by terms of any applicable special warranty required by the Contract

AIA Document A201 – 2017. Copyright © 1911, 1915, 1918, 1925, 1937, 1951, 1958, 1961, 1963, 1966, 1970, 1976, 1987, 1997, 2007 and 2017. All rights reserved. "The American Institute of Architects," "American Institute of Architects," "AIA," the AIA Logo, and "AIA Contract Documents" are trademarks of The American Institute of Architects. This document was produced at 16:23:08 EST on 03/06/2025 under Subscription No.20240046071 which expires on 08/01/2025, is not for resale, is licensed for one-time use only, and may only be used in accordance with the AIA Contract Documents® Terms of Service. To report copyright violations, e-mail docinfo@aiacontracts.com.
User Notes: (67ca1160ac1df796e2d601b8)

Documents, any of the Work is found to be not in accordance with the requirements of the Contract Documents, the Contractor shall correct it promptly after receipt of notice from the Owner to do so, unless the Owner has previously given the Contractor a written acceptance of such condition. The Owner shall give such notice promptly after discovery of the condition. During the one-year period for correction of Work, if the Owner fails to notify the Contractor and give the Contractor an opportunity to make the correction, the Owner waives the rights to require correction by the Contractor and to make a claim for breach of warranty. If the Contractor fails to correct nonconforming Work within a reasonable time during that period after receipt of notice from the Owner or Architect, the Owner may correct it in accordance with Section 2.5.

§ 12.2.2.2 The one-year period for correction of Work shall be extended with respect to portions of Work first performed after Substantial Completion by the period of time between Substantial Completion and the actual completion of that portion of the Work.

§ 12.2.2.3 The one-year period for correction of Work shall not be extended by corrective Work performed by the Contractor pursuant to this Section 12.2.

§ 12.2.3 The Contractor shall remove from the site portions of the Work that are not in accordance with the requirements of the Contract Documents and are neither corrected by the Contractor nor accepted by the Owner.

§ 12.2.4 The Contractor shall bear the cost of correcting destroyed or damaged construction of the Owner or Separate Contractors, whether completed or partially completed, caused by the Contractor's correction or removal of Work that is not in accordance with the requirements of the Contract Documents.

§ 12.2.5 Nothing contained in this Section 12.2 shall be construed to establish a period of limitation with respect to other obligations the Contractor has under the Contract Documents. Establishment of the one-year period for correction of Work as described in Section 12.2.2 relates only to the specific obligation of the Contractor to correct the Work, and has no relationship to the time within which the obligation to comply with the Contract Documents may be sought to be enforced, nor to the time within which proceedings may be commenced to establish the Contractor's liability with respect to the Contractor's obligations other than specifically to correct the Work.

§ 12.3 Acceptance of Nonconforming Work

If the Owner prefers to accept Work that is not in accordance with the requirements of the Contract Documents, the Owner may do so instead of requiring its removal and correction, in which case the Contract Sum will be reduced as appropriate and equitable. Such adjustment shall be effected whether or not final payment has been made.

ARTICLE 13 MISCELLANEOUS PROVISIONS

§ 13.1 Governing Law

The Contract shall be governed by the law of the place where the Project is located, excluding that jurisdiction's choice of law rules. If the parties have selected arbitration as the method of binding dispute resolution, the Federal Arbitration Act shall govern Section 15.4.

§ 13.2 Successors and Assigns

§ 13.2.1 The Owner and Contractor respectively bind themselves, their partners, successors, assigns, and legal representatives to covenants, agreements, and obligations contained in the Contract Documents. Except as provided in Section 13.2.2, neither party to the Contract shall assign the Contract as a whole without written consent of the other. If either party attempts to make an assignment without such consent, that party shall nevertheless remain legally responsible for all obligations under the Contract.

§ 13.2.2 The Owner may, without consent of the Contractor, assign the Contract to a lender providing construction financing for the Project, if the lender assumes the Owner's rights and obligations under the Contract Documents. The Contractor shall execute all consents reasonably required to facilitate the assignment.

§ 13.3 Rights and Remedies

§ 13.3.1 Duties and obligations imposed by the Contract Documents and rights and remedies available thereunder shall be in addition to and not a limitation of duties, obligations, rights, and remedies otherwise imposed or available by law.

AIA Document A201 – 2017. Copyright © 1911, 1915, 1918, 1925, 1937, 1951, 1958, 1961, 1963, 1966, 1970, 1976, 1987, 1997, 2007 and 2017. All rights reserved. "The American Institute of Architects," "American Institute of Architects," "AIA," the AIA Logo, and "AIA Contract Documents" are trademarks of The American Institute of Architects. This document was produced at 16:23:08 EST on 03/06/2025 under Subscription No.20240046071 which expires on 08/01/2025, is not for resale, is licensed for one-time use only, and may only be used in accordance with the AIA Contract Documents® Terms of Service. To report copyright violations, e-mail docinfo@aiacontracts.com.
User Notes: (67ca1160ac1df796e2d601b8)

§ 13.3.2 No action or failure to act by the Owner, Architect, or Contractor shall constitute a waiver of a right or duty afforded them under the Contract, nor shall such action or failure to act constitute approval of or acquiescence in a breach thereunder, except as may be specifically agreed upon in writing.

§ 13.4 Tests and Inspections

§ 13.4.1 Tests, inspections, and approvals of portions of the Work shall be made as required by the Contract Documents and by applicable laws, statutes, ordinances, codes, rules, and regulations or lawful orders of public authorities. Unless otherwise provided, the Contractor shall make arrangements for such tests, inspections, and approvals with an independent testing laboratory or entity acceptable to the Owner, or with the appropriate public authority, and shall bear all related costs of tests, inspections, and approvals. The Contractor shall give the Architect timely notice of when and where tests and inspections are to be made so that the Architect may be present for such procedures. The Owner shall bear costs of tests, inspections, or approvals that do not become requirements until after bids are received or negotiations concluded. The Owner shall directly arrange and pay for tests, inspections, or approvals where building codes or applicable laws or regulations so require.

§ 13.4.2 If the Architect, Owner, or public authorities having jurisdiction determine that portions of the Work require additional testing, inspection, or approval not included under Section 13.4.1, the Architect will, upon written authorization from the Owner, instruct the Contractor to make arrangements for such additional testing, inspection, or approval, by an entity acceptable to the Owner, and the Contractor shall give timely notice to the Architect of when and where tests and inspections are to be made so that the Architect may be present for such procedures. Such costs, except as provided in Section 13.4.3, shall be at the Owner's expense.

§ 13.4.3 If procedures for testing, inspection, or approval under Sections 13.4.1 and 13.4.2 reveal failure of the portions of the Work to comply with requirements established by the Contract Documents, all costs made necessary by such failure, including those of repeated procedures and compensation for the Architect's services and expenses, shall be at the Contractor's expense.

§ 13.4.4 Required certificates of testing, inspection, or approval shall, unless otherwise required by the Contract Documents, be secured by the Contractor and promptly delivered to the Architect.

§ 13.4.5 If the Architect is to observe tests, inspections, or approvals required by the Contract Documents, the Architect will do so promptly and, where practicable, at the normal place of testing.

§ 13.4.6 Tests or inspections conducted pursuant to the Contract Documents shall be made promptly to avoid unreasonable delay in the Work.

§ 13.5 Interest

Payments due and unpaid under the Contract Documents shall bear interest from the date payment is due at the rate the parties agree upon in writing or, in the absence thereof, at the legal rate prevailing from time to time at the place where the Project is located.

ARTICLE 14 TERMINATION OR SUSPENSION OF THE CONTRACT

§ 14.1 Termination by the Contractor

§ 14.1.1 The Contractor may terminate the Contract if the Work is stopped for a period of 30 consecutive days through no act or fault of the Contractor, a Subcontractor, a Sub-subcontractor, their agents or employees, or any other persons or entities performing portions of the Work, for any of the following reasons:

- **.1** Issuance of an order of a court or other public authority having jurisdiction that requires all Work to be stopped;
- **.2** An act of government, such as a declaration of national emergency, that requires all Work to be stopped;
- **.3** Because the Architect has not issued a Certificate for Payment and has not notified the Contractor of the reason for withholding certification as provided in Section 9.4.1, or because the Owner has not made payment on a Certificate for Payment within the time stated in the Contract Documents; or
- **.4** The Owner has failed to furnish to the Contractor reasonable evidence as required by Section 2.2.

§ 14.1.2 The Contractor may terminate the Contract if, through no act or fault of the Contractor, a Subcontractor, a

AIA Document A201 – 2017. Copyright © 1911, 1915, 1918, 1925, 1937, 1951, 1958, 1961, 1963, 1966, 1970, 1976, 1987, 1997, 2007 and 2017. All rights reserved. "The American Institute of Architects," "American Institute of Architects," "AIA," the AIA Logo, and "AIA Contract Documents" are trademarks of The American Institute of Architects. This document was produced at 16:23:08 EST on 03/06/2025 under Subscription No.20240046071 which expires on 08/01/2025, is not for resale, is licensed for one-time use only, and may only be used in accordance with the AIA Contract Documents® Terms of Service. To report copyright violations, e-mail docinfo@aiacontracts.com.
User Notes: (67ca1160ac1df796e2d601b8)

Sub-subcontractor, their agents or employees, or any other persons or entities performing portions of the Work, repeated suspensions, delays, or interruptions of the entire Work by the Owner as described in Section 14.3, constitute in the aggregate more than 100 percent of the total number of days scheduled for completion, or 120 days in any 365-day period, whichever is less.

§ 14.1.3 If one of the reasons described in Section 14.1.1 or 14.1.2 exists, the Contractor may, upon seven days' notice to the Owner and Architect, terminate the Contract and recover from the Owner payment for Work executed, as well as reasonable overhead and profit on Work not executed, and costs incurred by reason of such termination.

§ 14.1.4 If the Work is stopped for a period of 60 consecutive days through no act or fault of the Contractor, a Subcontractor, a Sub-subcontractor, or their agents or employees or any other persons or entities performing portions of the Work because the Owner has repeatedly failed to fulfill the Owner's obligations under the Contract Documents with respect to matters important to the progress of the Work, the Contractor may, upon seven additional days' notice to the Owner and the Architect, terminate the Contract and recover from the Owner as provided in Section 14.1.3.

§ 14.2 Termination by the Owner for Cause

§ 14.2.1 The Owner may terminate the Contract if the Contractor

- **.1** repeatedly refuses or fails to supply enough properly skilled workers or proper materials;
- **.2** fails to make payment to Subcontractors or suppliers in accordance with the respective agreements between the Contractor and the Subcontractors or suppliers;
- **.3** repeatedly disregards applicable laws, statutes, ordinances, codes, rules and regulations, or lawful orders of a public authority; or
- **.4** otherwise is guilty of substantial breach of a provision of the Contract Documents.

§ 14.2.2 When any of the reasons described in Section 14.2.1 exist, and upon certification by the Architect that sufficient cause exists to justify such action, the Owner may, without prejudice to any other rights or remedies of the Owner and after giving the Contractor and the Contractor's surety, if any, seven days' notice, terminate employment of the Contractor and may, subject to any prior rights of the surety:

- **.1** Exclude the Contractor from the site and take possession of all materials, equipment, tools, and construction equipment and machinery thereon owned by the Contractor;
- **.2** Accept assignment of subcontracts pursuant to Section 5.4; and
- **.3** Finish the Work by whatever reasonable method the Owner may deem expedient. Upon written request of the Contractor, the Owner shall furnish to the Contractor a detailed accounting of the costs incurred by the Owner in finishing the Work.

§ 14.2.3 When the Owner terminates the Contract for one of the reasons stated in Section 14.2.1, the Contractor shall not be entitled to receive further payment until the Work is finished.

§ 14.2.4 If the unpaid balance of the Contract Sum exceeds costs of finishing the Work, including compensation for the Architect's services and expenses made necessary thereby, and other damages incurred by the Owner and not expressly waived, such excess shall be paid to the Contractor. If such costs and damages exceed the unpaid balance, the Contractor shall pay the difference to the Owner. The amount to be paid to the Contractor or Owner, as the case may be, shall be certified by the Initial Decision Maker, upon application, and this obligation for payment shall survive termination of the Contract.

§ 14.3 Suspension by the Owner for Convenience

§ 14.3.1 The Owner may, without cause, order the Contractor in writing to suspend, delay or interrupt the Work, in whole or in part for such period of time as the Owner may determine.

§ 14.3.2 The Contract Sum and Contract Time shall be adjusted for increases in the cost and time caused by suspension, delay, or interruption under Section 14.3.1. Adjustment of the Contract Sum shall include profit. No adjustment shall be made to the extent

- **.1** that performance is, was, or would have been, so suspended, delayed, or interrupted, by another cause for which the Contractor is responsible; or
- **.2** that an equitable adjustment is made or denied under another provision of the Contract.

AIA Document A201 – 2017. Copyright © 1911, 1915, 1918, 1925, 1937, 1951, 1958, 1961, 1963, 1966, 1970, 1976, 1987, 1997, 2007 and 2017. All rights reserved. "The American Institute of Architects," "American Institute of Architects," "AIA," the AIA Logo, and "AIA Contract Documents" are trademarks of The American Institute of Architects. This document was produced at 16:23:08 EST on 03/06/2025 under Subscription No.20240046071 which expires on 08/01/2025, is not for resale, is licensed for one-time use only, and may only be used in accordance with the AIA Contract Documents® Terms of Service. To report copyright violations, e-mail docinfo@aiacontracts.com.
User Notes: (67ca1160ac1df796e2d601b8)

§ 14.4 Termination by the Owner for Convenience

§ 14.4.1 The Owner may, at any time, terminate the Contract for the Owner's convenience and without cause.

§ 14.4.2 Upon receipt of notice from the Owner of such termination for the Owner's convenience, the Contractor shall

- **.1** cease operations as directed by the Owner in the notice;
- **.2** take actions necessary, or that the Owner may direct, for the protection and preservation of the Work; and
- **.3** except for Work directed to be performed prior to the effective date of termination stated in the notice, terminate all existing subcontracts and purchase orders and enter into no further subcontracts and purchase orders.

§ 14.4.3 In case of such termination for the Owner's convenience, the Owner shall pay the Contractor for Work properly executed; costs incurred by reason of the termination, including costs attributable to termination of Subcontracts; and the termination fee, if any, set forth in the Agreement.

ARTICLE 15 CLAIMS AND DISPUTES

§ 15.1 Claims

§ 15.1.1 Definition

A Claim is a demand or assertion by one of the parties seeking, as a matter of right, payment of money, a change in the Contract Time, or other relief with respect to the terms of the Contract. The term "Claim" also includes other disputes and matters in question between the Owner and Contractor arising out of or relating to the Contract. The responsibility to substantiate Claims shall rest with the party making the Claim. This Section 15.1.1 does not require the Owner to file a Claim in order to impose liquidated damages in accordance with the Contract Documents.

§ 15.1.2 Time Limits on Claims

The Owner and Contractor shall commence all Claims and causes of action against the other and arising out of or related to the Contract, whether in contract, tort, breach of warranty or otherwise, in accordance with the requirements of the binding dispute resolution method selected in the Agreement and within the period specified by applicable law, but in any case not more than 10 years after the date of Substantial Completion of the Work. The Owner and Contractor waive all Claims and causes of action not commenced in accordance with this Section 15.1.2.

§ 15.1.3 Notice of Claims

§ 15.1.3.1 Claims by either the Owner or Contractor, where the condition giving rise to the Claim is first discovered prior to expiration of the period for correction of the Work set forth in Section 12.2.2, shall be initiated by notice to the other party and to the Initial Decision Maker with a copy sent to the Architect, if the Architect is not serving as the Initial Decision Maker. Claims by either party under this Section 15.1.3.1 shall be initiated within 21 days after occurrence of the event giving rise to such Claim or within 21 days after the claimant first recognizes the condition giving rise to the Claim, whichever is later.

§ 15.1.3.2 Claims by either the Owner or Contractor, where the condition giving rise to the Claim is first discovered after expiration of the period for correction of the Work set forth in Section 12.2.2, shall be initiated by notice to the other party. In such event, no decision by the Initial Decision Maker is required.

§ 15.1.4 Continuing Contract Performance

§ 15.1.4.1 Pending final resolution of a Claim, except as otherwise agreed in writing or as provided in Section 9.7 and Article 14, the Contractor shall proceed diligently with performance of the Contract and the Owner shall continue to make payments in accordance with the Contract Documents.

§ 15.1.4.2 The Contract Sum and Contract Time shall be adjusted in accordance with the Initial Decision Maker's decision, subject to the right of either party to proceed in accordance with this Article 15. The Architect will issue Certificates for Payment in accordance with the decision of the Initial Decision Maker.

§ 15.1.5 Claims for Additional Cost

AIA Document A201 – 2017. Copyright © 1911, 1915, 1918, 1925, 1937, 1951, 1958, 1961, 1963, 1966, 1970, 1976, 1987, 1997, 2007 and 2017. All rights reserved. "The American Institute of Architects," "American Institute of Architects," "AIA," the AIA Logo, and "AIA Contract Documents" are trademarks of The American Institute of Architects. This document was produced at 16:23:08 EST on 03/06/2025 under Subscription No.20240046071 which expires on 08/01/2025, is not for resale, is licensed for one-time use only, and may only be used in accordance with the AIA Contract Documents® Terms of Service. To report copyright violations, e-mail docinfo@aiacontracts.com.
User Notes: (67ca1160ac1df796e2d601b8)

If the Contractor wishes to make a Claim for an increase in the Contract Sum, notice as provided in Section 15.1.3 shall be given before proceeding to execute the portion of the Work that is the subject of the Claim. Prior notice is not required for Claims relating to an emergency endangering life or property arising under Section 10.4.

§ 15.1.6 Claims for Additional Time

§ 15.1.6.1 If the Contractor wishes to make a Claim for an increase in the Contract Time, notice as provided in Section 15.1.3 shall be given. The Contractor's Claim shall include an estimate of cost and of probable effect of delay on progress of the Work. In the case of a continuing delay, only one Claim is necessary.

§ 15.1.6.2 If adverse weather conditions are the basis for a Claim for additional time, such Claim shall be documented by data substantiating that weather conditions were abnormal for the period of time, could not have been reasonably anticipated, and had an adverse effect on the scheduled construction.

§ 15.1.7 Waiver of Claims for Consequential Damages

The Contractor and Owner waive Claims against each other for consequential damages arising out of or relating to this Contract. This mutual waiver includes

- **.1** damages incurred by the Owner for rental expenses, for losses of use, income, profit, financing, business and reputation, and for loss of management or employee productivity or of the services of such persons; and
- **.2** damages incurred by the Contractor for principal office expenses including the compensation of personnel stationed there, for losses of financing, business and reputation, and for loss of profit, except anticipated profit arising directly from the Work.

This mutual waiver is applicable, without limitation, to all consequential damages due to either party's termination in accordance with Article 14. Nothing contained in this Section 15.1.7 shall be deemed to preclude assessment of liquidated damages, when applicable, in accordance with the requirements of the Contract Documents.

§ 15.2 Initial Decision

§ 15.2.1 Claims, excluding those where the condition giving rise to the Claim is first discovered after expiration of the period for correction of the Work set forth in Section 12.2.2 or arising under Sections 10.3, 10.4, and 11.5, shall be referred to the Initial Decision Maker for initial decision. The Architect will serve as the Initial Decision Maker, unless otherwise indicated in the Agreement. Except for those Claims excluded by this Section 15.2.1, an initial decision shall be required as a condition precedent to mediation of any Claim. If an initial decision has not been rendered within 30 days after the Claim has been referred to the Initial Decision Maker, the party asserting the Claim may demand mediation and binding dispute resolution without a decision having been rendered. Unless the Initial Decision Maker and all affected parties agree, the Initial Decision Maker will not decide disputes between the Contractor and persons or entities other than the Owner.

§ 15.2.2 The Initial Decision Maker will review Claims and within ten days of the receipt of a Claim take one or more of the following actions: (1) request additional supporting data from the claimant or a response with supporting data from the other party, (2) reject the Claim in whole or in part, (3) approve the Claim, (4) suggest a compromise, or (5) advise the parties that the Initial Decision Maker is unable to resolve the Claim if the Initial Decision Maker lacks sufficient information to evaluate the merits of the Claim or if the Initial Decision Maker concludes that, in the Initial Decision Maker's sole discretion, it would be inappropriate for the Initial Decision Maker to resolve the Claim.

§ 15.2.3 In evaluating Claims, the Initial Decision Maker may, but shall not be obligated to, consult with or seek information from either party or from persons with special knowledge or expertise who may assist the Initial Decision Maker in rendering a decision. The Initial Decision Maker may request the Owner to authorize retention of such persons at the Owner's expense.

§ 15.2.4 If the Initial Decision Maker requests a party to provide a response to a Claim or to furnish additional supporting data, such party shall respond, within ten days after receipt of the request, and shall either (1) provide a response on the requested supporting data, (2) advise the Initial Decision Maker when the response or supporting data will be furnished, or (3) advise the Initial Decision Maker that no supporting data will be furnished. Upon receipt of the response or supporting data, if any, the Initial Decision Maker will either reject or approve the Claim in whole or in part.

AIA Document A201 – 2017. Copyright © 1911, 1915, 1918, 1925, 1937, 1951, 1958, 1961, 1963, 1966, 1970, 1976, 1987, 1997, 2007 and 2017. All rights reserved. "The American Institute of Architects," "American Institute of Architects," "AIA," the AIA Logo, and "AIA Contract Documents" are trademarks of The American Institute of Architects. This document was produced at 16:23:08 EST on 03/06/2025 under Subscription No.20240046071 which expires on 08/01/2025, is not for resale, is licensed for one-time use only, and may only be used in accordance with the AIA Contract Documents® Terms of Service. To report copyright violations, e-mail docinfo@aiacontracts.com.
User Notes: (67ca1160ac1df796e2d601b8)

§ 15.2.5 The Initial Decision Maker will render an initial decision approving or rejecting the Claim, or indicating that the Initial Decision Maker is unable to resolve the Claim. This initial decision shall (1) be in writing; (2) state the reasons therefor; and (3) notify the parties and the Architect, if the Architect is not serving as the Initial Decision Maker, of any change in the Contract Sum or Contract Time or both. The initial decision shall be final and binding on the parties but subject to mediation and, if the parties fail to resolve their dispute through mediation, to binding dispute resolution.

§ 15.2.6 Either party may file for mediation of an initial decision at any time, subject to the terms of Section 15.2.6.1.

§ 15.2.6.1 Either party may, within 30 days from the date of receipt of an initial decision, demand in writing that the other party file for mediation. If such a demand is made and the party receiving the demand fails to file for mediation within 30 days after receipt thereof, then both parties waive their rights to mediate or pursue binding dispute resolution proceedings with respect to the initial decision.

§ 15.2.7 In the event of a Claim against the Contractor, the Owner may, but is not obligated to, notify the surety, if any, of the nature and amount of the Claim. If the Claim relates to a possibility of a Contractor's default, the Owner may, but is not obligated to, notify the surety and request the surety's assistance in resolving the controversy.

§ 15.2.8 If a Claim relates to or is the subject of a mechanic's lien, the party asserting such Claim may proceed in accordance with applicable law to comply with the lien notice or filing deadlines.

§ 15.3 Mediation

§ 15.3.1 Claims, disputes, or other matters in controversy arising out of or related to the Contract, except those waived as provided for in Sections 9.10.4, 9.10.5, and 15.1.7, shall be subject to mediation as a condition precedent to binding dispute resolution.

§ 15.3.2 The parties shall endeavor to resolve their Claims by mediation which, unless the parties mutually agree otherwise, shall be administered by the American Arbitration Association in accordance with its Construction Industry Mediation Procedures in effect on the date of the Agreement. A request for mediation shall be made in writing, delivered to the other party to the Contract, and filed with the person or entity administering the mediation. The request may be made concurrently with the filing of binding dispute resolution proceedings but, in such event, mediation shall proceed in advance of binding dispute resolution proceedings, which shall be stayed pending mediation for a period of 60 days from the date of filing, unless stayed for a longer period by agreement of the parties or court order. If an arbitration is stayed pursuant to this Section 15.3.2, the parties may nonetheless proceed to the selection of the arbitrator(s) and agree upon a schedule for later proceedings.

§ 15.3.3 Either party may, within 30 days from the date that mediation has been concluded without resolution of the dispute or 60 days after mediation has been demanded without resolution of the dispute, demand in writing that the other party file for binding dispute resolution. If such a demand is made and the party receiving the demand fails to file for binding dispute resolution within 60 days after receipt thereof, then both parties waive their rights to binding dispute resolution proceedings with respect to the initial decision.

§ 15.3.4 The parties shall share the mediator's fee and any filing fees equally. The mediation shall be held in the place where the Project is located, unless another location is mutually agreed upon. Agreements reached in mediation shall be enforceable as settlement agreements in any court having jurisdiction thereof.

§ 15.4 Arbitration

§ 15.4.1 If the parties have selected arbitration as the method for binding dispute resolution in the Agreement, any Claim subject to, but not resolved by, mediation shall be subject to arbitration which, unless the parties mutually agree otherwise, shall be administered by the American Arbitration Association in accordance with its Construction Industry Arbitration Rules in effect on the date of the Agreement. The Arbitration shall be conducted in the place where the Project is located, unless another location is mutually agreed upon. A demand for arbitration shall be made in writing, delivered to the other party to the Contract, and filed with the person or entity administering the arbitration. The party filing a notice of demand for arbitration must assert in the demand all Claims then known to that party on which arbitration is permitted to be demanded.

AIA Document A201 – 2017. Copyright © 1911, 1915, 1918, 1925, 1937, 1951, 1958, 1961, 1963, 1966, 1970, 1976, 1987, 1997, 2007 and 2017. All rights reserved. "The American Institute of Architects," "American Institute of Architects," "AIA," the AIA Logo, and "AIA Contract Documents" are trademarks of The American Institute of Architects. This document was produced at 16:23:08 EST on 03/06/2025 under Subscription No.20240046071 which expires on 08/01/2025, is not for resale, is licensed for one-time use only, and may only be used in accordance with the AIA Contract Documents® Terms of Service. To report copyright violations, e-mail docinfo@aiacontracts.com.
User Notes: (67ca1160ac1df796e2d601b8)

§ 15.4.1.1 A demand for arbitration shall be made no earlier than concurrently with the filing of a request for mediation, but in no event shall it be made after the date when the institution of legal or equitable proceedings based on the Claim would be barred by the applicable statute of limitations. For statute of limitations purposes, receipt of a written demand for arbitration by the person or entity administering the arbitration shall constitute the institution of legal or equitable proceedings based on the Claim.

§ 15.4.2 The award rendered by the arbitrator or arbitrators shall be final, and judgment may be entered upon it in accordance with applicable law in any court having jurisdiction thereof.

§ 15.4.3 The foregoing agreement to arbitrate and other agreements to arbitrate with an additional person or entity duly consented to by parties to the Agreement, shall be specifically enforceable under applicable law in any court having jurisdiction thereof.

§ 15.4.4 Consolidation or Joinder

§ 15.4.4.1 Subject to the rules of the American Arbitration Association or other applicable arbitration rules, either party may consolidate an arbitration conducted under this Agreement with any other arbitration to which it is a party provided that (1) the arbitration agreement governing the other arbitration permits consolidation, (2) the arbitrations to be consolidated substantially involve common questions of law or fact, and (3) the arbitrations employ materially similar procedural rules and methods for selecting arbitrator(s).

§ 15.4.4.2 Subject to the rules of the American Arbitration Association or other applicable arbitration rules, either party may include by joinder persons or entities substantially involved in a common question of law or fact whose presence is required if complete relief is to be accorded in arbitration, provided that the party sought to be joined consents in writing to such joinder. Consent to arbitration involving an additional person or entity shall not constitute consent to arbitration of any claim, dispute or other matter in question not described in the written consent.

§ 15.4.4.3 The Owner and Contractor grant to any person or entity made a party to an arbitration conducted under this Section 15.4, whether by joinder or consolidation, the same rights of joinder and consolidation as those of the Owner and Contractor under this Agreement.

AIA Document A201 – 2017. Copyright © 1911, 1915, 1918, 1925, 1937, 1951, 1958, 1961, 1963, 1966, 1970, 1976, 1987, 1997, 2007 and 2017. All rights reserved. “The American Institute of Architects,” “American Institute of Architects,” “AIA,” the AIA Logo, and “AIA Contract Documents” are trademarks of The American Institute of Architects. This document was produced at 16:23:08 EST on 03/06/2025 under Subscription No.20240046071 which expires on 08/01/2025, is not for resale, is licensed for one-time use only, and may only be used in accordance with the AIA Contract Documents® Terms of Service. To report copyright violations, e-mail docinfo@aiacontracts.com.
User Notes: (67ca1160ac1df796e2d601b8)

Additions and Deletions Report for
AIA® Document A201® – 2017

This Additions and Deletions Report, as defined on page 1 of the associated document, reproduces below all text the author has added to the standard form AIA document in order to complete it, as well as any text the author may have added to or deleted from the original AIA text. Added text is shown underlined. Deleted text is indicated with a horizontal line through the original AIA text.

Note: This Additions and Deletions Report is provided for information purposes only and is not incorporated into or constitute any part of the associated AIA document. This Additions and Deletions Report and its associated document were generated simultaneously by AIA software at 16:23:08 EST on 03/06/2025.

Changes to original AIA text

PAGE 3

8.3.1, 15.3.2, **15.4**-

PAGE 7

3.14, 6.2.5-

PAGE 15

Variable Information

PAGE 1

ITB 25-02 Construction of Forestry Building

2401 Bear Trail, Port Orange, Florida 32128

City of Port Orange, a Municipal Corporation

1000 City Center Circle, Port Orange, Florida 32129

Hall & Ogle Architects, Inc.

208 Magnolia Avenue, Daytona Beach, Florida 32114

Additions and Deletions Report for AIA Document A201 – 2017. Copyright © 1911, 1915, 1918, 1925, 1937, 1951, 1958, 1961, 1963, 1966, 1970, 1976, 1987, 1997, 2007 and 2017. All rights reserved. "The American Institute of Architects," "American Institute of Architects," "AIA," the AIA Logo, and "AIA Contract Documents" are trademarks of The American Institute of Architects. This document was produced at 16:23:08 EST on 03/06/2025 under Subscription No.20240046071 which expires on 08/01/2025, is not for resale, is licensed for one-time use only, and may only be used in accordance with the AIA Contract Documents® Terms of Service. To report copyright violations, e-mail docinfo@aiacontracts.com.
User Notes: (67ca1160ac1df796e2d601b8)

Certification of Document's Authenticity

AIA® Document D401™ – 2003

I, Shannon K. Balmer, Senior Assistant City Attorney, hereby certify, to the best of my knowledge, information and belief, that I created the attached final document simultaneously with its associated Additions and Deletions Report and this certification at 16:23:08 EST on 03/06/2025 under Order No. 20240046071 from AIA Contract Documents software and that in preparing the attached final document I made no changes to the original text of AIA® Document A201™ - 2017, General Conditions of the Contract for Construction, other than those additions and deletions shown in the associated Additions and Deletions Report.

_____

(Signed)

_____

(Title)

_____

(Dated)

AIA Document D401 – 2003. Copyright © 1992 and 2003. All rights reserved. "The American Institute of Architects," "American Institute of Architects," "AIA," the AIA Logo, and "AIA Contract Documents" are trademarks of The American Institute of Architects. This document was produced at 16:23:08 EST on 03/06/2025 under Order No.20240046071 which expires on 08/01/2025, is not for resale, is licensed for one-time use only, and may only be used in accordance with the AIA Contract Documents® Terms of Service. To report copyright violations, e-mail docinfo@aiacontracts.com.
User Notes: (67ca1160ac1df796e2d601b8)

EXHIBIT "A"

Insurance and Bond

Consisting of 5 Pages

Insurance

Standard Insurance Requirements			
	Insurance	**Standards**	**Additional Requirements**
☒	Workers' Compensation The Contractor shall maintain coverage for its employees with statutory workers' compensation limits, and no less than the limits indicated in the Schedule of Limits for Employers' Liability. Said coverage shall include a waiver of subrogation in favor of the City. **The City will not accept elective exemptions**. Any contractor using an employee leasing company shall complete the Leased Employee Affidavit (Exhibit A).	Contract Amount — Limits Up to $10 million — Statutory/$500,000 $10 - $20 million — Statutory/$1,000,000 Contracts over $20 million To Be Determined by the City.	☐If Contract requires work on or about navigable waters, Longshoreman's and Harbor Workers' Coverage required. ☐If vessels involved, Jones Act coverage with limits of $500,000 required.
☒	Comprehensive General Liability (including Completed Operations and Contractual Liability	Limits: Combined Single Limit Bodily Injury and Property damage $1,000,000 occurrence $1,000,000 aggregate	☐When work is on or under Railroad rights of way or properties, the Contractor shall take out and maintain during the life of the Contract, Railroad protective liability and property damage insurance in amounts as requested by the Railroad.
☒	Comprehensive Business, Automobile Liability to include all owned, hired and non-owned automobiles.	Limits: Auto Liability Body Injury and Property Damage: $1,000,000 each occurrence $1,000,000 aggregate	
Additional Insurance Requirements			
☒	Property Insurance Builders Risk. Additional Coverage:	Limits: Buildings - Completed value of Contract. "All Risk" coverage on latest ISO for or its equivalent. Permission granted to occupy. Owner named as insured AIMA	If Agreement requires handling or installation of Owner's equipment, coverage should be furnished on "All Risk" form, including transit and Owner shall be named.
☐	Professional Liability	Limits: Coverage - $1,000,000	
☐	Installation Floater (IT)	Limits: Coverage - $ To be determined.	
☐	Contractor Pollution Liability	Limits: Coverage - $1,000,000	
☐	Errors and Omissions	Limits: Coverage - $1,000,000	
☐	Umbrella Policy	Limits: Coverage – $ To be determined.	
☒	Payment and Performance Bond Required	Limits: Coverage - Equal to amount of Contract.	
☐	**City Manager waives Payment and Performance Bond for work under $25,000.00.**		
☐	**Unless otherwise required by law, City Manager waives Insurance for FOB goods under $25,000.00**		

FRONT PAGE FOR BOND REQUIRED BY SECTION 255.05, F.S.

PAYMENT AND PERFORMANCE BOND

(Public Works)

Notice and Time Limitations Must Be In Accordance
With Section 255.05(2), (8) and (10), Florida Statutes

BOND NO. _____

PRINCIPAL:

Developer or Contractor:	S.A. Casey Construction, Inc.
Principal Business Address:	2822 Commerce Park Drive Suite 400 Orlando, Florida 32819
Contact Person:	Ian Casey, Vice President
Phone Number:	(386) 763-4190

SURETY: _____
Address: _____
_____
Contact Person: _____
Phone Number: _____

OWNER: City of Port Orange, Florida, a chartered municipal corporation
1000 City Center Circle
Port Orange, Florida 32129-4144
Contact Person: City Manager
Phone Number: (386) 506-5501

Amount: $668,914.12 **City Case/Project No. ITB 25-02 Construction of Forestry Building**

Description of Work: ITB 25-02 Construction of Forestry Building

Project Location: 2401 Bear Trail, Port Orange, Volusia County, Florida 32128

Legal Description: Portions of Parcel ID#: 622000000020
See Attached **Exhibit "A"**

Front Page

All other pages are subsequent to this page regardless of any numbers that may be printed thereon.

[MTR/sal 2015-02-10]
[CA8834]

Forestry Building
2401 Bear Trail, Port Orange, Florida 32128

Full Parcel ID:
622000000020

Legal Description:
A portion of the above referenced parcel number.

EXHIBIT "A"

S.A. Casey Construction, Inc.

ITB 25-02 Construction of Forestry Building

Bond No._____

COMBINATION PAYMENT AND PERFORMANCE BOND
FOR
PUBLIC CONSTRUCTION

per Section 255.05, Florida Statutes
Guaranty for Construction of Public Improvements

BY THIS BOND, We, **S.A. CASEY CONSTRUCTION, INC.** as Principal, and _____, a corporation, as Surety, are bound to **CITY OF PORT ORANGE, FLORIDA**, a Florida municipal corporation, herein called "Owner" or sometimes referred to as "City," in the sum of **SIX HUNDRED SIXTY-EIGHT THOUSAND NINE HUNDRED FOURTEEN AND 12/100 DOLLARS** (**$668,914.12**), for payment of which we bind ourselves, our heirs, personal representatives, successors, and assigns, jointly and severally.

THE CONDITION OF THIS BOND is that if Principal:

1. Performs the terms of that certain AIA Contract for Services, having an effective date of _____, entered into by and between the Principal and the City, for Construction of Forestry Building, hereinafter referred to as the "Contract," being made a part of this bond by reference, at the times and in the manner prescribed in the Contract; and

2. Promptly makes payments to all claimants, as defined in Section 255.05(1), Florida Statutes, supplying Principal with labor, materials, or supplies, used directly or indirectly by Principal in the prosecution of the work provided for in the Contract (the "Work"); and

3. Pays Owner all losses, damages, delay damages (including contractually authorized liquidated damages), expenses, costs, and attorney's fees, including appellate proceedings, that Owner sustains because of a breach or material breach by Principal under the Contract documents; and

4. Performs the guarantee of all work and materials furnished under the Contract for the time specified in the Contract, then this bond is void; otherwise it remains in full force.

Notice of Nonpayment and Time Limitations

Any action instituted by a claimant under this bond for payment must be in accordance with the notice and time limitation provisions in Sections 255.05(2), (8) and (10), Florida Statutes.

Any changes in or under the contract documents and compliance or noncompliance with any formalities connected with the contract or the changes does not affect Surety's obligation under this bond.

IN WITNESS WHEREOF, this performance and payment bond is executed and shall be deemed an original, this _____, day of _____, 2025.

Attest:

S.A. CASEY CONSTRUCTION, INC.

_____
(As to Corporate Principal) Secretary

By:_____
Ian Casey, Vice President

_____
(Witness to Principal)

(Corporate Seal)

_____
(Surety)

_____
(Witness to Surety)

By:_____
Name:_____
(Attorney-in-Fact)

(Corporate Seal)

NOTE: ***Date of BOND must not be prior to date of Contract.*** *If Developer/Principal is Partnership, all partners should execute BOND. All BONDS signed by an agent must be accompanied by a certified copy of the authority to act.*

IMPORTANT: Surety companies executing BONDS must appear on the Treasury Department's most current list (Circular 570 as amended) and be authorized to transact business in the State of Florida.

EXHIBIT "B"

ITB 25-02

Dated December 13, 2024

Consisting of 105 Pages

Not attached, on file with City Clerk

EXHIBIT "C"

Contractor's Proposal

Consisting of 36 Pages
Not attached, on file with City Clerk

EXHIBIT "D"

Application for Payment

Consisting of 1 Page

AIA® Document G702™ – 1992

Application and Certificate for Payment

TO OWNER:	**PROJECT:**	**APPLICATION NO:** 001	**Distribution to:**
		PERIOD TO:	OWNER: ☐
		CONTRACT FOR:	ARCHITECT: ☐
FROM CONTRACTOR:	**VIA ARCHITECT:**	**CONTRACT DATE:**	CONTRACTOR: ☐
		PROJECT NOS: / /	FIELD: ☐
			OTHER: ☐

CONTRACTOR'S APPLICATION FOR PAYMENT

Application is made for payment, as shown below, in connection with the Contract.
Continuation Sheet, AIA Document G703, is attached.

1. ORIGINAL CONTRACT SUM		$0.00
2. NET CHANGE BY CHANGE ORDERS		$0.00
3. CONTRACT SUM TO DATE (Line 1 ± 2)		$0.00
4. TOTAL COMPLETED & STORED TO DATE (Column G on G703)		$0.00
5. RETAINAGE:		
a. 0 % of Completed Work (Column D + E on G703)	$0.00	
b. 0 % of Stored Material (Column F on G703)	$0.00	
Total Retainage (Lines 5a + 5b or Total in Column I of G703)		$0.00
6. TOTAL EARNED LESS RETAINAGE (Line 4 Less Line 5 Total)		$0.00
7. LESS PREVIOUS CERTIFICATES FOR PAYMENT (Line 6 from prior Certificate)		$0.00
8. CURRENT PAYMENT DUE		$0.00
9. BALANCE TO FINISH, INCLUDING RETAINAGE (Line 3 less Line 6)	$0.00	

CHANGE ORDER SUMMARY	ADDITIONS	DEDUCTIONS
Total changes approved in previous months by Owner	$0.00	$0.00
Total approved this Month	$0.00	$0.00
TOTALS	$0.00	$0.00
NET CHANGES by Change Order		$0.00

The undersigned Contractor certifies that to the best of the Contractor's knowledge, information and belief the Work covered by this Application for Payment has been completed in accordance with the Contract Documents, that all amounts have been paid by the Contractor for Work for which previous Certificates for Payment were issued and payments received from the Owner, and that current payment shown herein is now due.

CONTRACTOR:

By: _____ Date: _____

State of:

County of:

Subscribed and sworn to before me this day of

Notary Public:

My Commission expires:

ARCHITECT'S CERTIFICATE FOR PAYMENT

In accordance with the Contract Documents, based on on-site observations and the data comprising this application, the Architect certifies to the Owner that to the best of the Architect's knowledge, information and belief the Work has progressed as indicated, the quality of the Work is in accordance with the Contract Documents, and the Contractor is entitled to payment of the AMOUNT CERTIFIED.

AMOUNT CERTIFIED $0.00

(Attach explanation if amount certified differs from the amount applied. Initial all figures on this Application and on the Continuation Sheet that are changed to conform with the amount certified.)

ARCHITECT:

By: _____ Date: _____

This Certificate is not negotiable. The AMOUNT CERTIFIED is payable only to the Contractor named herein. Issuance, payment and acceptance of payment are without prejudice to any rights of the Owner or Contractor under this Contract.

AIA Document G702™ – 1992. Copyright © 1953, 1963, 1965, 1971, 1978, 1983 and 1992 by The American Institute of Architects. All rights reserved. WARNING: This AIA® Document is protected by U.S. Copyright Law and International Treaties. Unauthorized reproduction or distribution of this AIA® Document, or any portion of it, may result in severe civil and criminal penalties, and will be prosecuted to the maximum extent possible under the law. This document was produced by AIA software at 14:01:08 ET on 11/20/2018 under Order No. 7619031806 which expires on 03/29/2019, and is not for resale.
User Notes: (3B9ADA53)

WAIVER AND RELEASE OF LIEN
UPON PROGRESS PAYMENT
(FLORIDA)

The undersigned lienor, in consideration of the sum of $ _____, hereby waives and releases its lien and payment bond claims and right to claim a lien for labor, services, and/or materials furnished through _____, 20____, to *[insert the name of your customer]* _____ on the job of *[insert the name of the Owner]* _____ to the following property:

This waiver and release does not cover any retention or labor, services or materials furnished after the date specified.

DATED on _____, 20____.

Witnesses:

[Lienor]

_____
Signature

_____
Print Name

By: _____

Print Name: _____

_____
Signature

_____
Print Name

Address: _____

_____

STATE OF FLORIDA
COUNTY OF _____

Sworn to and subscribed before me this ____ day of _____, 20____, by _____, ☐ who is personally known to be the person described in or ☐ has produced a Florida driver license or ☐ _____ as identification.

_____
Notary Public, State of Florida
Type or Print Name:
My Commission Expires:
Commission Number:

19/5220/610

WAIVER AND PARTIAL RELEASE OF LIEN
UPON PROGRESS PAYMENT
(FLORIDA)

The undersigned lienor, in consideration of the sum of $ _____, hereby waives and releases its lien and payment bond claims and right to claim a lien for labor, services, and/or materials furnished through _____, 20____, to *[insert the name of your customer]* _____ on the job of *[insert the name of the Owner]* _____ to the following property:

This waiver and release does not cover any retention or labor, services, or materials furnished after the date specified.

DATED on _____, 20___.

Witnesses:

[Lienor]

_____
Signature

_____
Print Name

By:_____

Print Name:_____

_____
Signature

_____
Print Name

Address:_____

_____

STATE OF FLORIDA
COUNTY OF _____

Sworn to and subscribed before me this ____ day of _____, 20____, by _____, ☐ who is personally known to be the person described in or ☐ has produced a Florida driver license or ☐ _____ as identification.

_____
Notary Public, State of Florida
Type or Print Name:
My Commission Expires:
Commission Number:

19/5220/611

WAIVER AND RELEASE OF LIEN
UPON FINAL PAYMENT
(FLORIDA)

The undersigned lienor, in consideration of the final payment in the amount of $_____ hereby waives and releases its lien and payment bond claims and right to claim a lien for labor, services, or materials furnished to _____ (customer) on the job of _____ (owner) to the following described property:

(description of property)

DATED on _____, 20___.

Witnesses:

[Lienor]

_____
Signature

By:_____
Print Name:

_____
Print Name

Address:_____

_____
Signature

_____

_____
Print Name

STATE OF FLORIDA
COUNTY OF _____

Sworn to and subscribed before me this ____ day of _____, 20____, by _____, ☐ who is personally known to be the person described in or ☐ has produced a Florida driver license or ☐ _____ as identification.

_____
Notary Public, State of Florida
Type or Print Name:
My Commission Expires:
Commission Number:

PROJECT: _____

CONTRACTOR'S AFFIDAVIT OF OUTSTANDING ACCOUNTS

To the best of my knowledge and belief, we hereby certify that all estimates of work shown on the application for payment Number ___ dated _____ are true and correct, that all work has been performed and material supplied in full accordance with the terms and conditions of the Agreement with Owner and all authorized changes thereto, that the following is a true and correct statement of the contract account up to and including the last day of the period covered by this estimate and that no part of the Payment Due This Estimate has been received.

	(Must match Pay Requisition)	(Owner Use Only)
ORIGINAL CONTRACT AMOUNT:	$_____	$_____
APPROVED CHANGE ORDERS:	$_____	$_____
ADJUSTED CONTRACT AMOUNT:	$_____	$_____
WORK COMPLETED TO DATE: (on contract)	$_____	$_____
Net Change (add/deduct)	$_____	$_____
Total Work Completed to Date	$_____	$_____
Less Retainage	$_____	$_____
Total Owed to Date	$_____	$_____
Less Prior Billings	$_____	$_____
PAYMENT DUE THIS ESTIMATE:	$_____	$_____

AFFIDAVIT OF OUTSTANDING ACCOUNTS

We hereby certify that all outstanding claims for labor, insurance, unemployment benefits, taxes, union benefits, subcontract materials, expendable equipment, and any and all other obligations incurred in the performance of said agreement have been paid in full in accordance with the requirements of said agreement except such outstanding claims as are listed below, which statement contains all claims against Contractor which are not yet paid. (All amounts owed, even if under extended periods of credit, must be included in this statement.) We also certify that these due and payable accounts will be paid as shown below out of funds to be received from the Owner for this period and signed Releases of Lien will be presented to Owner for each of the below listed Suppliers/Subcontractors.

Subcontractor/ Supplier Name	Type of Material or Labor Furnished	Contract Price (if applicable)	Amount Previously Paid	Amount to be Paid by Contractor to Subcontractor/ Supplier out of this Payment	Balance Owing Subcontractor/ Supplier After this Payment

The undersigned Contractor, having heretofore entered into a Contract with Owner to perform work in connection with the above project, and having made Affidavit of Outstanding Accounts in connection with request for payment in order to induce Owner to make a payment at this time in the amount indicated above, agrees as follows:

- That said payment is in strict compliance with the terms and conditions of said contract.
- That said payment shall be received as a trust fund and applied by the undersigned for the discharge of his obligations for labor, subcontract work, materials, equipment, supplies, services, etc. in connection with this project.
- That said payment will not be deposited with any depository to whom the Contractor has given any evidence of an indebted which gives to the depository any legal rights to such funds or any part thereof.
- That the person executing this Certificate on behalf of the Contractor is an authorized officer of the Contractor, having knowledge of all the matters hereinabove set forth and is duly authorized to execute this Certificate and bind the Contractor.

Dated this _____ day of _____, 20_____.

STATE OF _____
COUNTY OF _____

Subscribed and sworn to before me this
_____ day of _____, 20___.

Notary Public
My Commission Expires: _____

_____
(CONTRACTOR)

By:_____
(undersigned)
Title:_____

CONTRACTOR'S FINAL PAYMENT AFFIDAVIT
(FLORIDA)

STATE OF FLORIDA
COUNTY OF _____

BEFORE ME, the undersigned authority, duly authorized to administer oaths and take acknowledgments, personally appeared _____, who being duly sworn, deposes and says:

1. He is the _____ of _____ ("Contractor").

2. This Affidavit is made pursuant to Chapter 713, Florida Statutes, in connection with labor, services and materials supplied for improvement of the following described real property under the direct contract between _____ ("Owner") and Contractor:

3. All lienors under the direct contract have been paid in full for labor, services and/or materials, except as follows:

Lienor's Name and Address	Amount Due or to Become Due

_____
Contractor

By:_____
Print Name:

STATE OF FLORIDA
COUNTY OF _____

Sworn to and subscribed before me this _____ day of _____, 20___, by _____, ☐ who is personally known to be the person described in or ☐ has produced a Florida driver license or ☐ _____ as identification.

_____
Notary Public, State of Florida
Type or Print Name:
My Commission Expires:
Commission Number:

EXHIBIT "F"

Contract Completion Checklist

Consisting of 1 Page

Contract Completion Checklist

C.I.P.# / PROJECT DESCRIPTION: _____

CONTRACTOR: _____

Original Contract Sum _____
Change Orders _____
Final Contract Sum _____

			Approved	Date
1	**Scope Summary**	Contractor		
		Architect/Engineer		
		Owner		
2	**Substantial Completion Certificate**	Contractor		
		Architect/Engineer		
		Owner		
3	**Punch List**	Contractor		
		Architect/Engineer		
		Owner		
4	**Certificate of Occupancy:**	Contractor		
		Architect/Engineer		
		Owner		
5	**Operation, Maintenance & Training Manuals:** a. 1 Complete set of all Operations & Maintenance Manuals b. Copies of Maintenance Agreements	Contractor		
		Architect/Engineer		
		Owner		
6	**Warranties / Guarantees** a. 2 Complete Sets of all Warranty / Guarantee Documents	Contractor		
		Architect/Engineer		
		Owner		
7	**Consent of Surety:**	Contractor		
		Architect/Engineer		
		Owner		
8	**Affidavits & Final Lien Waivers:**	Contractor		
		Architect/Engineer		
		Owner		

Addendum No. 1

Consisting of 1 Page

CITY OF PORT ORANGE
PURCHASING DIVISION
1000 CITY CENTER CIRCLE
PORT ORANGE, FLORIDA 32129
TELEPHONE 386-506-5718
purchdiv@port-orange.org

ADDENDUM # 1
January 6, 2025

ITB #25-02 CONSTRUCTION OF FORESTRY BUILDING

To All Bidders:
The following changes, clarifications and additions are hereby made part of the ITB for the above referenced project dated December 13, 2024 and prepared by the City of Port Orange Purchasing Division as fully and completely as if the same were fully set forth therein. It is the sole responsibility of the bidder to confirm that all addenda have been received prior to submitting a bid and acknowledge such in the ITB documents.

A. CLARIFICATIONS:
None

B. CHANGES TO ITB DOCUMENT:
None

C. QUESTIONS AND ANSWERS:

Question #1
What exactly is the height of the building for the PEMB?
Answer #1
The eave height for the new building is 14'7".

In all other respects, except as specifically stated herein, the subject ITB #25-02 Construction of Forestry Building remains unchanged.

END OF ADDENDUM #1

Attachment "2"

ITB 25-02 Forestry Management Storage Barn

Consisting of 23 Pages

Not attached, on file with the City Engineer

Attachment "3"

Forestry Management Storage Barn Project Manual
100% Construction Documents

Consisting of 74 Pages

Not attached, on file with City Engineer

SECTION 7 – REQUIRED FORMS

FORM 7.1 – BID SUBMITTAL CHECKLIST

✓ Form 7.2 – Bidder's Acknowledgement

✓ Form 7.3 – Addendum and Change Order Procedure Acknowledgement

✓ Form 7.4 – Drug Free Preference Statement

✓ Form 7.5 – Public Entity Crimes Statement

✓ Form 7.6 – Anti-Collusion

✓ Form 7.7 – Statement of Bidder's Qualifications

✓ Form 7.8 – Professional References for Previous Experience

✓ Form 7.9 – List of Subcontractors

✓ Form 7.10 – Scrutinized Companies Certification

✓ Form 7.11 – Local Business Affidavit of Eligibility

✓ Form 7.12 – E-Verify Affidavit

✓ Form 7.13 – Debarment, Suspension and Other Responsibility Matters

✓ Form 7.14 – Affidavit of Compliance with Section 287.138, Florida Statutes

___ Form 7.15 – No Submittal Response

✓ Appendix A, 44 C.F.R. Part 18 – Certification Regarding Lobbying

✓ (Attachment 1) – Schedule of Unit Pricing

✓ Current Bonding Capacity Letter (as outlined in Section 6)

✓ Copy of all currently held Licenses (Contractor, Sunbiz, etc.)

✓ Current tax receipt for Bidder's municipality

✓ Original Bid Bond or certified check or bank draft (as outlined in Section 6)

___ Submission of one (1) original marked "ORIGINAL" and one (1) digital (flash drive) version in PDF format

BY: SA Casey Construction, Inc.
Name of Business

Authorized Signature

1/14/2025
Date

This document must be completed and returned with your Submittal

FORM 7.2 – BIDDER'S ACKNOWLEDGEMENT

I have carefully examined the Invitation to Bid (ITB), Instructions to Bidders, General and/or Special Conditions, Specifications and any other documents accompanying or made a part of this invitation.

I hereby propose to furnish the goods or services specified in the ITB at the prices or rates as finally negotiated. I agree that my bid will remain firm for a period of up to one-hundred-twenty (120) days in order to allow the City of Port Orange adequate time to evaluate the proposed bid. Furthermore, I agree to abide by all conditions of the ITB.

I certify that all information contained in the bid is truthful to the best of my knowledge and belief. I further certify that I am duly authorized to submit this bid on behalf of the Bidder/Contractor as its act and deed and that the Bidder/Contractor is ready, willing and able to perform if awarded the contract.

I further certify that this bid is made without prior understanding, contract, connection, discussion or collusion with any person, firm or corporation submitting a bid for the same product or service; no officer, employee or agent of the City of Port orange City Council or of any other Bidder interested in said ITB; and that the undersigned executed this Bidder's Acknowledgement with full knowledge and understanding of the matters therein contained and was duly authorized to do so.

I further certify that having read and examined the specifications and documents for the designated services and understanding the general conditions for the contract under which services will be performed, does hereby propose to furnish all labor, equipment and material to provide the services set forth in the ITB.

I hereby declare that the following listing states any clarifications, any and all variations from and exceptions to the requirements of the specifications and documents. The undersigned further declares that the "work" will be performed in strict accordance with such requirements and understands that any exceptions to the requirements of the specifications and documents may render the bid non-responsive.

NO EXCEPTIONS ALLOWED AFTER THE BID IS SUBMITTED:

Please check one: ☒I take NO exceptions. ☐Exceptions (list below; add additional pages if necessary):

_____

_____

SA Casey Construction, Inc.
Name of Business

Authorized Signature

Ian Casey, Vice-President
Printed Name and Title

22-3921381
Federal Identification No.

2822 Commerce Park Dr., Suite 400,
Mailing Address

Orlando, FL 32819
City, State & Zip Code

407-240-6775
Telephone Number

icasey@sacaseyconstruction.com
E-mail Address

STATE OF: Florida COUNTY OF: Orange

The foregoing instrument was acknowledged before me by means of ☑physical presence or ☐online notarization, this 14th day of January, 2025, by Ian Casey and who:

☑is personally known to me; or ☐ has produced _____ as identification.

_____ Notary Public, State of Florida
Printed, typed or stamped name, commission and expiration:

Robert LeBlanc
Comm.: # HH 316367
Expires: October 3, 2026
Notary Public - State of Florida

This document must be completed and returned with your Submittal

FORM 7.3 – ADDENDUM AND CHANGE ORDER PROCEDURE ACKNOWLEDGEMENT

ADDENDUM ACKNOWLEDGEMENT

I have carefully examined the Invitation to Bid (ITB), Instructions to Bidders, General and/or Special Conditions, Specification and any other documents accompanying or made a part of this ITB.

I acknowledge receipt and incorporation of the following addenda and the cost, if any, of such revisions has been included in the price of the bid proposal.

Addendum# 1 Date: 01/06/2025 Addendum#_____ Date:_____

Addendum#_____ Date:_____ Addendum#_____ Date:_____

CHANGE ORDER PROCEDURE ACKNOWLEDGEMENT

If awarded the Contract for this Solicitation, I acknowledge that no oral statement of any person shall modify or otherwise change or affect the terms, conditions or specifications stated in the resulting contract. All change order requests shall be made in writing by the Contractor for review by the Contract Administrator for the City of Port Orange. No work shall be performed as set forth in the change order until the Contractor receives an executed Purchase Order for the requested change.

I acknowledge the above statements regarding Addendum Acknowledgement and Change Order Procedures:

SA Casey Construction, Inc.
Name of Business

Authorized Signature

Ian Casey, Vice-President
Printed Name and Title

STATE OF: Florida COUNTY OF: Orange

The foregoing instrument was acknowledged before me by means of ☒ physical presence or ☐ online notarization, this 14th day of January, 2025, by Ian Casey and who:

☒ is personally known to me; or ☐ has produced _____ as identification.

Notary Public, State of Florida
Printed, typed or stamped name, commission and expiration:

Robert LeBlanc
Comm.: # HH 318367
Expires: October 3, 2026
Notary Public - State of Florida

This document must be completed and returned with your Submittal

FORM 7.4 – DRUG-FREE PREFERENCE STATEMENT

IDENTICAL TIE BIDS – Preference shall be given to businesses with drug-free workplace programs. Whenever two or more bids, proposals, statements or replies are equal with respect to price, quality and service are received by the City for procurement of commodities or contractual services, a bid received from a business that certifies that it has implemented a drug-free workplace program shall be given preference in the award process. Established procedures for processing tie bids will be followed if none of the tied Bidders have a drug-free workplace program.

In order to have a drug-free workplace program, a business shall:

1. Publish a statement notifying employees that the unlawful manufacture, distribution, dispensing, possession or use of a controlled substance is prohibited in the workplace and specifying the actions that will be taken against employees for violations of such prohibition.

2. Inform employees about the dangers of drug abuse in the workplace, the business's policy of maintaining a drug-free workplace, any available drug counseling, rehabilitation and employee assistance programs and the penalties that may be imposed upon employees for drug abuse violations.

3. Give each employee engaged in providing the commodities or contractual services that are under a bid a copy of the statement specified in subsection (1).

4. In the statement specified in subsection (1), notify the employees that, as a condition of working on the commodities or contractual services that are under the bid, the employee will abide by the terms of the statement and will notify the employer of any conviction of, or plea of guilty or nolo contendere to, any violation of chapter 893 or of any controlled substance the law of the United States or any state, for a violation occurring in the workplace no later than five (5) days after such conviction.

5. Impose a sanction on or require the satisfactory participation in a drug abuse assistance or rehabilitation program if such is available in the employee's community, by an employee who is so convicted.

6. Make a good faith effort to continue to maintain a drug-free workplace through implementation of Section 287.087, Florida Statutes.

As an authorized representative of the firm, I certify that this firm complies fully with the above requirements.

SA Casey Construction, Inc.
Name of Business

Authorized Signature

Ian Casey, Vice-President
Printed Name and Title

STATE OF: Florida COUNTY OF: Orange

The foregoing instrument was acknowledged before me by means of ☑ physical presence or ☐ online notarization, this 14th day of January, 2025, by Ian Casey and who:

☑ is personally known to me; or ☐ has produced _____ as identification.

Notary Public, State of Florida
Printed, typed or stamped name, commission and expiration:

Robert LeBlanc
Comm.: # HH 318367
Expires: October 3, 2026
Notary Public - State of Florida

This document must be completed and returned with your Submittal

FORM 7.5 – SWORN STATEMENT ON PUBLIC ENTITY CRIMES

UNDER SECTION 287.133(3)(A), FLORIDA STATUTES

(To be signed in the presence of a notary public or other authorized to administer oaths.)

Before me, the undersigned Authority, personally appeared affiant Ian Casey, who, being by me first duly sworn, made the following statement:

1. The business address of SA Casey Construction, Inc. (name of Offeror or business) is 2822 Commerce Park Dr., Suite 400, Orlando, FL 32819.
2. My relationship to SA Casey Construction, Inc. (name of Offeror or business) is VP (relationship such as sole proprietor, partner, president, vice president.)
3. I understand that a public entity crime as defined in Section 287.133 of the Florida Statutes includes a violation of any state or federal law by a person with respect to and directly related to the transaction of business with any public entity in Florida or with an agency or political subdivision of any other state or with the United States, including, but not limited to, any proposal or contract for goods or services to be provided to any public entity or such and agency or political subdivision and involving antitrust, fraud, theft, bribery, collusion, racketeering, conspiracy or material misrepresentation.
4. I understand that "convicted" or "conviction" is defined by the Florida Statutes to mean a finding of guilt or a conviction of a public entity crime, with or without an adjudication of guilt, in any federal or state trial court of record relating to charges brought by indictment or information after July 1, 1989, as a result of a jury verdict, non-jury trial, or entry of a plea of guilt or nolo contendere.
5. I understand that "affiliate" is defined by the Florida Statutes to mean (1) a predecessor or successor of a person or a corporation convicted of a public entity crime, or (2) an entity under the control of any natural person who is active in the management of the entity and who has been convicted of a public entity crime, or (3) those officers, directors, executives, partners, shareholders, employees, members, and agents who are active in the management of an affiliate, or (4) a person or corporation who knowingly entered into a joint venture with a person who has been convicted of a public entity crime in Florida during the preceding 36 months.
6. Neither the Offeror or contractor, nor any officer, director, executive, partner, shareholder, employee, member or agent who is active in the management of the Offeror or contractor, nor any affiliate of the Offeror or contractor has been convicted of a public entity crime subsequent to July 1, 1989. **(Draw a line through paragraph 6 if paragraph 7 below applies.)**
7. ~~There has been a conviction of a public entity crime by the Offeror or contractor, or an officer, director, executive, partner, shareholder, employee, member or agent of the Offeror or contractor who is active in the management of the Offeror or contractor or an affiliate of the Offeror or contractor. A determination has been made pursuant to Section 287.133(3) by order of the Division of Administrative Hearings that it is not in the public interest for the name of the convicted person or affiliate to appear on the convicted Bidder list. The name of the convicted person or affiliate is: _____. A copy of the order of the Division Administrative Hearing is attached.~~ **~~(Draw a line through paragraph 7 if paragraph 6 above applies)~~**

SA Casey Construction, Inc.
Name of Business

Authorized Signature

Ian Casey, Vice President
Printed Name and Title

STATE OF: Florida

COUNTY OF: Orange

The foregoing instrument was acknowledged before me by means of ☑ physical presence or ☐ online notarization, this 14th day of January, 2025, by Ian Casey and who:

☑ is personally known to me; or ☐ has produced _____ as identification.

_____ Notary Public, State of Florida

Printed, typed or stamped name, commission and expiration:

Robert LeBlanc
Comm.: # HH 318367
Expires: October 3, 2026
Notary Public - State of Florida

This document must be completed and returned with your Submittal

FORM 7.6 – ANTI-COLLUSION

By signing this form, the Bidder agrees that this bid is made without any other understanding, agreement or connection with any person, corporation or firm submitting a bid for the same purpose and that the bid is in all respects fair and without collusion or fraud.

SIGN in ink in the space provided below. Unsigned bids will be considered incomplete and will be disqualified and rejected.

IT IS AGREED BY THE UNDERSIGNED BIDDER THAT THE SIGNING AND DELIVERY OF THE BID REPRESENTS THE BIDDER'S ACCEPTANCE OF THE TERMS AND CONDITIONS OF THE FOREGOING SPECIFICATIONS, CONTRACT AND PROVISION, AND IF AWARDED, THIS CONTRACT WILL REPRESENT THE AGREEMENT BETWEEN THE BIDDERS AND THE CITY OF PORT ORANGE.

NAME OF FIRM: SA Casey Construction, Inc.

SIGNED BY: _____

(MUST BE SIGNED BY A COMPANY OFFICER OR AUTHORIZED AGENT)

PRINTED SIGNATURE: Ian Casey, Vice-President

TITLE: VP

ADDRESS: 2822 Commerce Park Dr., Suite 400

CITY, STATE AND ZIP CODE: Orlando, FL 32819

TELEPHONE: 407-240-6775

F.E.I.N.: 22-3921381

NO bid may be withdrawn for a period of one-hundred-twenty (120) days subsequent to the submittal of the bids without the consent of the City of Port Orange.

This document must be completed and returned with your Submittal

FORM 7.7 – STATEMENT OF BIDDER'S QUALIFICATIONS

The undersigned warrants that he or she is duly authorized to complete this document, and hereby affirms that the information contained in Form 7.7 is complete, true and correct to the best of his or her knowledge and belief. If necessary, question may be answered on separate paper and attached with any additional information that may be pertinent.

A. Name of Bidder: SA Casey Construction, Inc.

B. Permanent main office address: 2822 Commerce Park Dr., Suite 400, Orlando, FL 32819

C. Date organized: 2/14/2006

D. If a corporation, where incorporated: Orlando, FL

E. How many years have you been engaged in the business under your present firm or trade name? 19

F. Contracts on hand: (List these, showing amount of each contract and the approximate anticipated dates of completion.) **USE SEPARATE SHEET & ATTACH TO SUBMITTAL**

G. General character of work performed by your company: Commercial & Goverment Work

H. Have you ever failed to complete any work awarded to you? If so, where and why? No

I. Have you ever defaulted on a contract? If so, where and why? No

J. List your major equipment currently owned or leased: **USE SEPARATE SHEET & ATTACH TO SUBMITTAL**

K. Background and experience of the principal members of your organization, including the officers: USE **SEPARATE SHEET & ATTACH TO SUBMITTAL**

L. Credit currently available: $ 1.2 million LOC

M. Give bank name, contact name and phone number: Attached

Will you, upon request, fill out a detailed financial statement and furnish any other information that may be required by the Owner? ☑Yes ☐No

The undersigned hereby authorizes and requests any person, firm or corporation to furnish any information requested by the Owner in verification of the recitals compromising the Statement of Bidder's Qualifications.

SA Casey Construction, Inc.
Name of Business

Authorized Signature

Ian Casey, Vice President
Printed Name and Title

STATE OF: Florida

COUNTY OF: Orange

The foregoing instrument was acknowledged before me by means of ☑physical presence or ☐online notarization, this 14th day of January, 2025, by Ian Casey and who:

☑is personally known to me; or ☐ has produced _____ as identification.

Robert LeBlanc Notary Public, State of Florida

Printed, typed or stamped name, commission and expiration:

Robert LeBlanc
Comm.: # HH 318367
Expires: October 3, 2026
Notary Public - State of Florida

This document must be completed and returned with your Submittal

AS OF 1/10/2025

Project	Contract Amt	Revised Contract	Start Date	Permit Date	Completion Date	Trending Date
7-Eleven - Sand Mine Rd	$ 3,022,893.00	$ 3,022,893.00	3/26/2021	3/24/2021	8/19/2021	9/1/2022
OC - Courthouse 13th Floor Buildout	$ 3,875,000.00	$ 3,875,000.00	6/16/2022	6/9/2022	4/1/2025	4/1/2025
OC - IOC II Second Floor Renovation	$ 480,000.00	$ 480,000.00	10/1/2022	2/17/2022	2/23/2024	2/23/2024
OC - Back to Nature	$ 4,354,059.00	$ 4,354,059.00	11/1/2022	2/16/2023	2/15/2025	2/15/2025
OC - Public Works Silo	$ 684,000.00	$ 684,000.00	10/15/2023	7/13/2023	2/15/2025	2/15/2025
OC - Corrections Genesis Pipe	$ 2,425,000.00	$ 2,425,000.00	6/5/2023	6/1/2023	5/1/2025	5/1/2025
Ripley's World Headquarters	$ 7,375,584.00	$ 7,375,584.00	5/29/2023	5/21/2023	10/1/2024	10/1/2024
West Apopka Medical	$ 2,343,026.00	$ 2,343,026.00	10/2/2023	4/5/2024	6/1/2025	6/1/2025
OC - Courthouse 22nd Floor HVAC	$ 399,000.00	$ 399,000.00	7/25/2024	4/1/2024	2/1/2025	2/1/2025
HE Equipment Jetstream FL	$ 2,756,824.00	$ 2,756,824.00	7/22/2024	6/15/2024	2/1/2025	2/1/2025
Morsco Building	$ 3,195,402.00	$ 3,195,402.00	2/1/2024	3/26/2023	12/15/2024	12/15/2024
Hybrid Technologies	$ 369,000.00	$ 369,000.00	2/5/2024	2/1/2024	10/23/2024	10/23/2024
Groveland Gas Station Reno.	$ 780,000.00	$ 780,000.00	2/5/2024	9/25/2024	2/15/2025	2/15/2025
Oviedo Riverside Park	$ 735,040.00	$ 735,040.00	3/5/2024	3/20/2024	3/1/2025	3/1/2025
OC - Tangelo Park	$ 273,802.00	$ 273,802.00	10/15/2024	6/1/2024	4/1/2025	4/1/2025
OC - Fire Station #52	$ 315,000.00	$ 315,000.00	TBD	TBD	TBD	TBD
OC - Michigan Campus Building	$ 2,819,036.00	$ 2,819,036.00	10/1/2024	3/1/2024	5/1/2025	5/1/2025
5423 Lake Howell Utility	$ 40,500.00	$ 40,500.00	TBD	TBD	TBD	TBD
Candee Lee's	$ 168,000.00	$ 168,000.00	8/12/2024	7/4/2024	2/1/2025	2/1/2025
OC - Corrections Bldg. D,E,F	$ 1,799,000.00	$ 1,799,000.00	TBD	TBD	TBD	TBD
Shake Shack Florida Mall	$ 8,700.00	$ 8,700.00	TBD	TBD	TBD	TBD
Shake Shack I Drive	$ 10,400.00	$ 10,400.00	TBD	TBD	TBD	TBD
3201 37th Street	$ 735,000.00	$ 735,000.00	8/29/2024	7/15/2024	3/1/2025	3/1/2025
Coastline Power Sols. Design	$ 312,750.00	$ 312,750.00	6/27/2024	N/A	2/1/2026	2/1/2026
Clayton Bldg. Lobby	$ 52,249.00	$ 52,249.00	9/27/2024	N/A	11/2/2024	11/2/2024
Beem Light Sauna	$ 477,885.00	$ 477,885.00	11/4/2024	10/15/2024	2/1/2024	2/1/2024
OC Bithlo Neighborhood Center	$ 3,046,000.00	$ 3,046,000.00	TBD	TBD	TBD	TBD
Papa John's University	$ 323,684.00	$ 323,684.00	9/16/2024	8/1/2024	12/15/2024	12/15/2024
Papa John's St. Cloud	$ 338,147.00	$ 338,147.00	9/16/2024	9/25/2024	1/15/2025	1/15/2025
Voxx Automotive	$ 52,900.00	$ 52,900.00	11/15/2024	N/A	1/21/2025	1/21/2025
DCL Orlando	$ 151,000.00	$ 151,000.00	TBD	TBD	TBD	TBD
OCPS - Windermere HS Sidewalk	$ 69,925.00	$ 69,925.00	TBD	TBD	TBD	TBD
4500 Seaboard Suite B/C VSP	$ 157,391.38	$ 157,391.38	1/2/2025	N/A	2/2/2025	2/2/2025
OUC - IRP Water Plant Admin	$ 73,000.00	$ 73,000.00	TBD	TBD	TBD	TBD
Osceola Heritage Park Rubber	$ 125,000.00	$ 125,000.00	TBD	TBD	TBD	TBD
Yoga Joint - Winter Park	$ 754,000.00	$ 754,000.00	11/11/2024	10/15/2024	3/1/2025	3/1/2025
Coastline Power Solutions	$ 14,333,146.00	$ 14,333,146.00	TBD	TBD	TBD	TBD
Velux	$ 475,255.00	$ 475,255.00	12/2/2024	TBD	4/1/2025	4/1/2025
United Access	$ 93,000.00	$ 93,000.00	8/15/2024	8/5/2024	12/26/2024	12/26/2024
	Contract Amt	**Revised Contract**				
Totals:	**$ 59,799,598.38**	**$ 59,799,598.38**				

S.A. CASEY™
CONSTRUCTION

2025 Equipment Owned by SA Casey

1. F350
2. Bobcat

Team

Shawn Casey CGC

Chief Executive Officer

Shawn Casey, CEO, has built the firm's impeccable reputation for superior client service since founding S.A Casey Construction in 2006. Setting Central Florida's highest standards for quality construction methods. Under his leadership, the firm has set the benchmark for quality construction in Central Florida, consistently completing projects on time and within budget, with over 65% of business coming from repeat clients. Beyond his professional success, Shawn is passionately committed to his community, actively supporting and sponsoring organizations focused on the well-being of children and the growth of Orlando.

Years of Experience

42 Total
19 with S.A. Casey

Education

B.S. Building Construction,
University of Florida

Licenses & Certifications

- State of Florida Certified General Contractor, CGC #042180
- OSHA 30-Hour Certified

Team

S.A. CASEY CONSTRUCTION

Alan Ruth

President

Alan is the driving force behind S.A. Casey Construction, leading the Leadership Team and overseeing the day-to-day operations of the company. With a successful 30-year career, he brings a wealth of expertise in driving brand growth, enhancing operational efficiencies, and reducing costs. His extensive background in both facilities and construction management enables him to navigate the complexities of multi-million dollar organizations and manage budgets exceeding $100 million with ease. Alan's strategic approach is firmly rooted in core values that prioritize client needs and the importance of fostering a supportive environment for team members who share those values.

Years of Experience

30 Total
3.5 with S.A. Casey

Education

- Associates in Business Administration and Management, Normandale Community College
- Facilities Management Certificate, North Hennepin Technical College

Licenses & Certifications

- Facilities Management Certified
- Ethics & Procedures Certified
- EPA Universal Chloroflurocarbon (CFC) License, Ferris State University
- Commercial Real Estate Investing Certified
- Sarbanes-Oxley Compliance Strategies Certified
- OSHA 30-Hour Certified

Team

Ian Casey CGC

Vice President

Ian Casey, an Orlando native, has been deeply rooted in construction from an early age, working alongside his family and gaining invaluable hands-on experience. With a strong foundation in construction estimating and project management, Ian is adept at strategic planning, scope validation, and precise cost estimation for construction projects.

Years of Experience

13 Total
13 with S.A. Casey

Education

- Political Science Degree, University of Central Florida
- Construction Management, Indiana State University

Licenses & Certifications

- State of Florida Certified General Contractor, CGC #1266914
- OSHA 30-Hour Certified

BANK REFERENCE

NAME:	**First Horizon Bank**
OFFICERS NAME:	Chuck Fortier – VP Commercial Banking RM
ADDRESS:	315 E. Robinson Street, Suite 350 Orlando, FL 32801
PHONE:	321-319-1746
FAX:	407-650-9841
EMAIL:	chuck.fortier@firsthorizon.com

FORM 7.8 – PROFESSIONAL REFERENCES FOR PREVIOUS EXPERIENCE

The Bidder proposes that they are qualified to perform the referenced work and has successfully done so on recent projects similar in nature and size. The City reserves the right to check references and confirm information provided herein. **Please provide three (3) current and correct references from clients for similar services. (DO NOT include the City of Port Orange)**

1. Company Name: Intram Investment, Inc.
   Contact Person: Kelly Froelich
   City, State: Orlando, FL
   Telephone Number: 407-354-2200
   Email Address: Kfroelich@intram.com
   Description of goods/services provided: Posner Park - New ground up commercial building and site work
   Contract Amount: $1,329,950.00
   Start/End Date of Contract: 04/2022 - 03/2023
2. Company Name: Orange County
   Contact Person: Jack Davis
   City, State: Orlando, FL
   Telephone Number: 407-748-3779 / 407-836-0033
   Email Address: Jack.davis@ocfl.net
   Description of goods/services provided: Interior renovation of entire 14th floor of Orangee County Courthouse. more than 5,000 sqft.
   Contract Amount: $2,070,913.35
   Start/End Date of Contract: 02/2021 04/2022
3. Company Name: City of OCoee
   Contact Person: Ginger Corless
   City, State: OCoee, FL
   Telephone Number: 407-608-0401 / 407-554-7126
   Email Address: VCorless@ocoee.org
   Description of goods/services provided: New park with site lighting, fountain, boardwalk, retaining walls, pier.
   Contract Amount: $2,749,382.00
   Start/End Date of Contract: 02/2022 – 02/2023

This document must be completed and returned with your Submittal.

FORM 7.8 – PROFESSIONAL REFERENCES FOR PREVIOUS EXPERIENCE (page 2)

LISTING OF PREVIOUS EXPERIENCE
COMMERCIAL CLIENT LIST

The Bidder proposes that they are qualified to perform the referenced work and has successfully done so on recent projects similar in nature and size. A minimum of three (3) projects must be listed below. The Owner reserves the right to check references and confirm information provided herein.

List clients to whom you currently provide or have in the past provided equal or similar services to those required under the City's contract as outlined in this bid package. A minimum of three (3) projects shall be listed below in order to bid on this contract. The Owner reserves the right to check references and confirm information provided herein.

1. Contact Name: Christie Crosby
   Phone: 407-284-6539 / 407-922-5751
   Current Client: ☑ Yes ☐ No
   Number of years of service provided: 12
   Description of service: Tenant Build outs when she was with Colonial Properties, Manulife Financial, Piedmont and Eastgroup

2. Contact Name: Kathryn Moriarty
   Phone: 407-293-6990 ext 0102
   Current Client: ☑ Yes ☐ No
   Number of years of service provided: 12
   Description of service: Industrial Renovations

3. Contact Name: Steve MacGeorge
   Phone: 321-356-1802
   Current Client: ☑ Yes ☐ No
   Number of years of service provided: 18
   Description of service: New Bldgs - 2050 Plymouth Sorrent, Holiday Inn Alt Springs, CLT Meetings - OAL

This document must be completed and returned with your Submittal.

FORM 7.9 – LISTING OF SUBCONTRACTORS

The Bidder proposes that the following subcontractors are qualified to perform the referenced work and have successfully done so on recent projects similar in nature and size. All subcontractors whose work product accounts for 5% or more of the total contract value shall be listed. Upon approval of subcontractors listed, the successful **Bidder shall not substitute subcontractors without approval from the City Representative**. Bidder shall attach additional sheets as necessary.

Subcontractor No. 1

Name: Mac Gillivray & Co.

Description of Work: Survey / As-Builts

Percent of Contract Price: 1.5%.

Previous Experience Together: ☑Yes ☐No

Subcontractor No. 2

Name: JBi Contractors

Description of Work: Sitework & Concrete

Percent of Contract Price: 34%.

Previous Experience Together: ☐Yes ☑No

Subcontractor No. 3

Name: Midstate Caulking & Construction

Description of Work: Caulking & waterproofing

Percent of Contract Price: .08%.

Previous Experience Together: ☑Yes ☐No

Subcontractor No. 4

Name: Stratford Doors

Description of Work: Doors & Hardware

Percent of Contract Price: .25%.

Previous Experience Together: ☑Yes ☐No

Subcontractor No. 5

Name: Paratec Door Solutions

Description of Work: Overhead Doors

Percent of Contract Price: 2.6%

Previous Experience Together: ☑Yes ☐No

This document must be completed and returned with your submittal

FORM 7.9 – LISTING OF SUBCONTRACTORS

The Bidder proposes that the following subcontractors are qualified to perform the referenced work and have successfully done so on recent projects similar in nature and size. All subcontractors whose work product accounts for 5% or more of the total contract value shall be listed. Upon approval of subcontractors listed, the successful **Bidder shall not substitute subcontractors without approval from the City Representative**. Bidder shall attach additional sheets as necessary.

Subcontractor No. 6

Name: A & W Construction Services, Inc.

Description of Work: Drywall

Percent of Contract Price: 2.5%

Previous Experience Together: ☑ Yes ☐ No

Subcontractor No. 7

Name: Vintage Painting, Inc.

Description of Work: Painting

Percent of Contract Price: 0.14%

Previous Experience Together: ☐ Yes ☑ No

Subcontractor No. 8

Name: Union Lasteel Metal Building

Description of Work: PEMB

Percent of Contract Price: 23%

Previous Experience Together: ☐ Yes ☑ No

Subcontractor No. 9

Name: Century Air Conditioning & Heating

Description of Work: HVAC

Percent of Contract Price: 3.8%

Previous Experience Together: ☑ Yes ☐ No

Subcontractor No. 10

Name: Lynch Electric & Design

Description of Work: Electrical

Percent of Contract Price: 9.7%

Previous Experience Together: ☐ Yes ☑ No

This document must be completed and returned with your submittal

FORM 7.10 SCRUTINIZED COMPANIES CERTIFICATION

(To be signed in the presence of a notary public or other officer authorized to administer oaths.)

SCRUTINIZED COMPANIES CERTIFICATION PURSUANT TO SECTION 287.135, FLORIDA STATUTES

I, Ian Casey, Vice-President, on behalf
(Print Name and Title)

of SA Casey Construction, Inc. ("Company"), certify that SA Casey Construction, Inc.
(Company Name) (Company Name)

does not:
1. Participate in a boycott of Israel; and
2. Is not on the Scrutinized Companies with Boycott Israel List; and
3. Is not on the Scrutinized Companies with Activities in Sudan List; and
4. Is not on the Scrutinized Companies with Activities in the Iran Petroleum Energy Sector List; and
5. Has not engaged in business operations in Syria.

Submitting a false certification shall be deemed a material breach of contract. The City of Port Orange shall provide notice, in writing, to the Company of the City's determination concerning the false certification. The Company shall have ninety (90) days following receipt of the notice to respond in writing and demonstrate that the determination of false certification was made in error. If the Company does not demonstrate that the City's determination of false certification was made in error, then the City shall have the right to terminate the contract and seek civil remedies pursuant to Florida Statute § 287.135.

Section 287.135, Florida Statutes prohibits the City from: 1) Contracting with companies for goods or services in any amount if at the time of bidding on, submitting a proposal for, or entering into or renewing a contract if the company is on the Scrutinized Companies that Boycott Israel List, created pursuant to Section 215.4725, F.S. or is engaged in a boycott of Israel; and 2) Contracting with companies for goods or services over $1,000,000.00 that are on either the Scrutinized Companies with activities in the Iran Petroleum Energy Sector List, created pursuant to s. 215.473, or are engaged in business operations in Syria.

As the person authorized to sign on behalf of the Company, I hereby certify that the company identified above in the section entitled "Company Name" does not participate in any boycott of Israel, is not listed on the Scrutinized Companies that Boycott Israel List, is not listed on either the Scrutinized Companies with activities in the Iran Petroleum Energy Sector List and is not engaged in business operations in Syria. I understand that pursuant to Section 287.135, Florida Statutes, the submission of a false certification may subject the company to civil penalties, attorney's fees, and/or costs. I further understand that any contract with the City for goods or services may be terminated at the option of the City if the company is found to have submitted a false certification or has been placed on the Scrutinized Companies with Activities in Sudan List or the Scrutinized Companies with Activities in the Iran Petroleum Energy Sector List.

SA Casey Construction, Inc.
COMPANY NAME

SIGNATURE

Ian Casey
PRINT NAME

Vice-President
TITLE

STATE OF FLORIDA

COUNTY OF: Orange

The foregoing instrument was acknowledged before me by means of ☑ physical presence or ☐ online notarization, this 14th day of January, 2025, by Ian Casey and who:

☑ is personally known to me; or ☐ has produced _____ as identification.

_____ Notary Public, State of Florida
Printed, typed or stamped name, commission and expiration:

Robert LeBlanc
Comm.: # HH 318367
Expires: October 3, 2026
Notary Public - State of Florida

This document to be completed and returned with your Submittal

FORM 7.11 – LOCAL BUSINESS AFFIDAVIT OF ELIGIBILITY

City of Port Orange

This declaration is executed under penalty of perjury of the laws to the United States and the State of Florida

THIS AFFIDAVIT IS SUBMITTED IN REFERENCE TO THE FOLLOWING SOLICITATION:

Project# *(as applicable)*: _____

Business Name: SA Casey Construction, Inc. Contact Person/Title: Ian Casey / Vice-President

Mailing Address: 2822 Commerce Parl Dr., Suite 400 City,State,Zip: Orlando, FL 32819

Phone Number: 407-240-6775 Email address: icasey@sacaseyconstruction.com

Physical Presence of Business: ☑Headquarters ☑Principal Place of Business

Within Legal Boundaries: ☐City of Port Orange ☐Volusia County ☑State of Florida

FEIN (Federal Employer Identification Number): 22-3921381

Business Structure: ☑Corporation ☐LLC ☐Partnership ☐Sole Proprietorship ☐Other (Specify): _____

****PLEASE ATTACH A VALID BUSINESS TAX RECEIPT OR OTHER SUCH DOCUMENTATION****

ATTESTATION – I understand that:
A local supplier or contractor is interpreted as a respondent to a solicitation, which as of the date of the solicitation opening, has a valid Business Tax Receipt (BTR) issued by the City of Port Orange to do business in the City of Port Orange which authorizes the supplier or contractor to provide the goods, services, or construction to be purchased and has a physical address located within the limits of Port Orange from which the supplier or contractor operates or performs business. A Post Office Box cannot be used to establish physical address. This local preference is only used as part of a tie breaker during a formal solicitation. The City uses Sunbiz to verify a supplier or contractor's business address. Sunbiz is a database on the Florida Department of State, Division of Corporations website and can be accessed using this link: https://dos.myflorida.com/sunbiz/.

Exemptions from Local Preference
Local preference is not permitted when (1) the purchase is funded, in whole or in part, by an entity prohibiting application of the preferences by grant agreement, contract or applicable federal, state or local law; or (2) emergency purchasing.

As an authorized representative of the Firm, I certify that this Firm complies fully with the above requirements.

SA Casey Construction, Inc.
Name of Business

Authorized Signature

Ian Casey, Vice President
Printed Name and Title

STATE OF: Florida

COUNTY OF: Orange

The foregoing instrument was acknowledged before me by means of ☑physical presence or ☐online notarization, this 14th day of January, 2025, by Ian Casey and who:

☑is personally known to me; or ☐ has produced _____ as identification.

Notary Public, State of Florida
Printed, typed or stamped name, commission and expiration:

Robert LeBlanc
Comm.: # HH318367
Expires: October 3, 2026
Notary Public - State of Florida

This document must be completed and returned with your Submittal

Tax Collector Scott Randolph **Local Business Tax Receipt** **Orange County, Florida**

2024 **EXPIRES 9/30/2025** 5000-1027723

5000	BUSINESS OFFICE	$30.00	10 EMPLOYEES	1801	CERT GENERAL CONTRA	$30.00	1 EMPLOYEE

TOTAL TAX	$60.00
PREVIOUSLY PAID	$60.00
TOTAL DUE	$0.00

CASEY SHAWN A

S A CASEY CONSTRUCTION INC
2822 COMMERECE PARK DR STE 400
ORLANDO FL 32819

2822 COMMERECE PARK DR #400
U - ORLANDO, 32819

PAID: $60.00 0098-01155645 7/9/2024

Tax Collector Scott Randolph **Local Business Tax Receipt** **Orange County, Florida**

This local Business Tax Receipt is in addition to and not in lieu of any other tax required by law or municipal ordinance. Businesses are subject to regulation of zoning, health and other lawful authorities. This receipt is valid from October 1 through September 30 of receipt year. **Delinquent penalty is added October 1.**

2024 **EXPIRES 9/30/2025** 5000-1027723

5000	BUSINESS OFFICE	$30.00	10 EMPLOYEES	1801	CERT GENERAL CONTRA	$30.00	1 EMPLOYEE

TOTAL TAX	$60.00
PREVIOUSLY PAID	$60.00
TOTAL DUE	$0.00

CASEY SHAWN A

S A CASEY CONSTRUCTION INC
2822 COMMERECE PARK DR STE 400
ORLANDO FL 32819

2822 COMMERECE PARK DR #400
U - ORLANDO, 32819

PAID: $60.00 0098-01155645 7/9/2024

SCOTT RANDOLPH, TAX COLLECTOR • ORANGE COUNTY, FLORIDA •

This receipt is official when validated by the Tax Collector.

Orange County Code requires this local Business Tax Receipt to be displayed conspicuously at the place of business in public view. It is subject to inspection by all duly authorized officers of the County.

FORM 7.12 – E-VERIFY AFFIDAVIT

CITY OF PORT ORANGE

CONTRACTOR E-VERIFY AFFIDAVIT

IN ACCORDANCE WITH SECTION 448.095, FLORIDA STATUTES

Project Name: Construction of Forestry Building

Solicitation Number: ITB: 25-02

I, the undersigned hereby certify that S.A. Casey Construction **(insert contractor company name) does not employ, contract with or subcontract with an unauthorized alien, and is otherwise in full compliance with Section 448.095, Florida Statutes.**

I acknowledge that it is my responsibility to ensure full compliance with Section 448.095, Florida Statutes. I am aware enrollment in the E-Verify system for employers can be done at www.e-verify.gov.

A true and correct copy of SA Casey Construction, Inc. **(insert contractor company name) proof of registration in the E-Verify system is attached to this Affidavit.**

By affixing my signature below, I hereby affirm that I am duly authorized to bind the company reference herein and I will comply with all applicable E-Verify requirements.

Ian Casey, Vice-President
Print or Type Name, Title

Signature of Affiant

22-3921381
Federal Employer ID Number (FEIN)

955713
E-Verify Number

STATE OF FLORIDA

COUNTY OF: Orange

The foregoing instrument was acknowledged before me by means of ☑ physical presence or ☐ online notarization, this 14th day of January, 2025, by Ian Casey and who:

☑ is personally known to me; or ☐ has produced _____ as identification.

_____ Notary Public, State of Florida

Printed, typed or stamped name, commission and expiration:

Robert LeBlanc
Comm.: # HH 318367
Expires: October 3, 2026
Notary Public - State of Florida

This document to be completed and returned with your Submittal

New

E-Verify+™

Modernize the employment eligibility verification process today!

Learn More Enable E-Verify+

My Company Profile

Company Information

Company Name
S. A. Casey Construction, Inc

Doing Business As (DBA) Name

Company ID
955713

Enrollment Date
Mar 16, 2016

Employer Identification Number (EIN)
223921381

Unique Entity Identifier (UEI)

DUNS Number
615312050

Total Number of Employees
20 to 99

NAICS Code
236

Sector
Construction

Subsector
Construction of Buildings

Edit Company Information

FORM 7.13 – CERTIFICATION REGARDING DEBARMENT, SUSPENSION AND OTHER RESPONSIBILITY MATTERS

Primary Covered Transactions
(To be completed by Prime Contractor)

1. The prospective participant certifies to the best of its knowledge and belief that it and its principals:
   (a) Are not presently debarred, suspended, proposed for debarment, declared ineligible or voluntarily excluded from covered transactions by and Federal department or agency;
   (b) Have not within a three-year period preceding this proposal bee convicted for had a civil judgement rendered against them for commission of fraud or a criminal offense in connection with obtaining, attempting to obtain or performing a public (Federal, State or local) transaction or contract under a public transaction; violation of Federal or State antitrust statutes or commission of embezzlement, theft forgery, bribery, falsification or destruction of records, making false statement or receiving stolen property.
   (c) Are not presently indicted for or otherwise criminally or civilly charged by a governmental entity (Federal, State or local) with commission of any of the offenses enumerated in paragraph 1. (b) of this certification;
   (d) Have not within a three-year period preceding this application/proposal had one or more public transactions (Federal, State or local) terminated for cause or default.
2. Where the prospective primary participant is unable to certify to any of the statements in this certification, such prospective participant shall attach an explanation to this proposal.

SA Casey Construction, Inc.	ITB: 25-02
Organization Name	Bid Number or Project Name
Dan Casey, Vice-President	11/4/25
Name and Title of Authorized Representative	Signature Date

This document must be completed and returned with your Submittal

FORM 7.14 – AFFIDAVIT OF COMPLIANCE WITH SECTION 287.138, FLORIDA STATUTES

AFFIDAVIT OF COMPLIANCE WITH SECTION 287.138, FLORIDA STATUTES CONTRACTING WITH FOREIGN ENTITIES OF CONCERN

The undersigned ("Affiant"), on behalf of the entity listed below ("Entity"), hereby attests under penalty of perjury as follows:

1. Affiant is the Vice-President (Title) of SA Casey Construction, Inc. (Business Name) which does business in the State of Florida, hereinafter called the "Entity".
2. Entity is not owned by the government of a foreign country of concern, as defined in Section 287.138 (1) (c), Florida Statutes.
3. The government of a foreign country of concern does not have a controlling interest in Entity, as defined in Section 287.138 (1)(a), Florida Statutes.
4. Entity is not organized under the laws of, and does not have a principal place of business in, a foreign country of concern.
5. Entity is not owned or controlled by the government of a foreign country of concern.
6. For purposes of this affidavit, a foreign country of concern means the People's Republic of China, the Russian Federation, the Islamic Republic of Iran, the Democratic People's Republic of Korea, the Republic of Cuba, the Venezuelan regime of Nicolas Maduro, or the Syrian Arab Republic, including any agency of or any other entity of significant control of such foreign country of concern, as defined in Section 287.138(1)(c), Florida Statutes.

The undersigned is authorized to execute this affidavit on behalf of the Entity.

Date: January 14, 2025 Signed: _____

Entity: S.A. Casey Construction, Inc. Name: Ian Casey

Title: Vice-President

STATE OF: Florida COUNTY OF: Orange

The foregoing instrument was acknowledged before me by means of ☒ physical presence or ☐ online notarization, this 14th day of January, 2025, by Ian Casey and who:

☒ is personally known to me; or ☐ has produced _____ as identification.

Robert LeBlanc

Notary Public, State of Florida at Large:
Printed Name/Seal of Notary, Commission and Expiration Date:

Robert LeBlanc (seal)
Comm.: # HH 318367
Expires: October 3, 2026
Notary Public - State of Florida

My commission expires: 10/03/26

This document must be completed and returned with your Submittal

FLORIDA SURETY BONDS, INC.

620 N. Wymore Road, Suite 200
Maitland, FL 32751
407-786-7770
Fax 407-786-7766

888-786-BOND (2663)
Fax 888-718-BOND (2663)

www. FloridaSuretyBonds.com

January 10, 2025

RE: S. A. Casey Construction, Inc.

To Whom It May Concern,

We are pleased to be the surety agents for S. A. Casey Construction, Inc. Bonds are currently written through Merchants National Bonding, Inc./Merchants Bonding Company (Mutual) which is A.M. Best Rated "A, IX" and has a U.S. Treasury Listing of $25,094,000.

We usually anticipate no difficulties in providing surety bonds for S. A. Casey Construction, Inc. in **$12,000,000 single, $30,000,000 aggregate range**. These limits are merely guidelines and can be extended subject to underwriting which includes surety review of the contract terms, pertinent bond forms and general financial reporting at the time of said request.

S. A. Casey Construction, Inc. is an outstanding contractor, and we hold them in the highest regard. We are extremely confident in our contractor and encourage you to offer them an opportunity to execute any upcoming projects.

This letter is not a commitment to provide any bonds unless all underwriting requirements including contract, bond form and financing review are met prior to issuing any bonds. Neither our agency, nor the surety is liable for any damages relating to this letter or project.

Should you have any questions, please do not hesitate to contact us.

Sincerely,

Sarah K O'Linn

Sarah K. O'Linn
Vice President, Florida Surety Bonds

APPENDIX A, 44 C.F.R. PART 18 – CERTIFICATION REGARDING LOBBYING Certification for Contracts, Grants, Loans, and Cooperative Agreements

(Required for each bid or offer exceeding $100,000)

The undersigned certifies, to the best of his or her knowledge and belief, that:

1. No federal appropriated funds have been paid or will be paid, by or on behalf of the undersigned, to any person for influencing or attempting to influence an officer or employee of an agency, a Member of Congress, an officer or employee of Congress, or an employee of a Member of Congress in connection with the awarding of any federal contract, the making of any federal grant, the making of any federal loan, the entering into of any cooperative agreement, and the extension, continuation, renewal, amendment, or modification of any federal contract, grant, loan, or cooperative agreement.

2. If any funds other than federal appropriated funds have been paid or will be paid to any person for influencing or attempting to influence an officer or employee of any agency, a Member of Congress, an officer or employee of Congress, or an employee of a Member of Congress in connection with this federal contract, grant, loan, or cooperative agreement, the undersigned shall complete and submit Standard Form-LLL, "Disclosure Form to Report Lobbying," in accordance with its instructions.

3. The undersigned shall require that the language of this certification be included in the award documents for all subawards at all tiers (including subcontracts, subgrants, and contracts under grants, loans, and cooperative agreements) and that all subrecipients shall certify and disclose accordingly.

4. This certification is a material representation of fact upon which reliance was placed when this transaction was made or entered into. Submission of this certification is a prerequisite for making or entering into this transaction imposed by section 1352, Title 31, U.S.C. Any person who fails to file the required certification shall be subject to a civil penalty of not less than $10,000 and not more than $100,000 for each such failure.

The Contractor, S.A. Casey Construction certifies or affirms the truthfulness and accuracy of each statement of its certification and disclosure, if any. In addition, the Contractor understands and agrees that the provisions of 31 U.S.C. Chap. 38, Administrative Remedies for False Claims and Statements, apply to this certification and disclosure, if any.

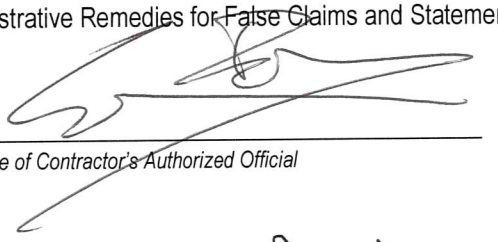

Signature of Contractor's Authorized Official

Ian Casey, Vice President

Name & Title of Contractor's Authorized Official

Date: 01/14/2025

(ATTACHMENT 1) - SCHEDULE OF UNIT PRICING

ITB #25-02 Construction of Forestry Building

Completed (Attachment 1) Schedule of Unit Pricing MUST be included with Bid Submission

Bidders must complete all field shown in green	
Name of Business:	S.A. Casey Construction, Inc.
Contact Person:	Ian Casey
Email Address:	Icasey@sacaseyConstruction.com
Authorized Signature:	

ALL UNIT PRICING IN ACCORDANCE WITH SECTION 3 - SCOPE OF WORK

Description	Unit of Measure	Price
<u>Base Bid</u>: Construction of a new 5,226 Sq. Ft. metal Forestry Management storage building and 6,631 Sq. Ft. of 6" stabilized access path on the City's wellfield property.	Lump Sum	$ 649,661.70
<u>Additive Alternate #1</u>: Install 3" of recycled asphalt pavement on top of the 6.631 Sq. Ft. 6" stabilized base.	Lump Sum	$ 19,252.42

Ron DeSantis, Governor

Melanie S. Griffin, Secretary

Florida dbpr

STATE OF FLORIDA
DEPARTMENT OF BUSINESS AND PROFESSIONAL REGULATION

CONSTRUCTION INDUSTRY LICENSING BOARD

THE BUILDING CONTRACTOR HEREIN IS CERTIFIED UNDER THE
PROVISIONS OF CHAPTER 489, FLORIDA STATUTES

CASEY, IAN MCHALE

S.A. CASEY CONSTRUCTION, INC.
2822 COMMERCE PARK DR
SUITE 400
ORLANDO FL 32819

LICENSE NUMBER: CBC1266914

EXPIRATION DATE: AUGUST 31, 2026

Always verify licenses online at MyFloridaLicense.com

ISSUED: 08/31/2024

Do not alter this document in any form.

This is your license. It is unlawful for anyone other than the licensee to use this document.

Ron DeSantis, Governor

Melanie S. Griffin, Secretary

STATE OF FLORIDA
DEPARTMENT OF BUSINESS AND PROFESSIONAL REGULATION

CONSTRUCTION INDUSTRY LICENSING BOARD

THE GENERAL CONTRACTOR HEREIN IS CERTIFIED UNDER THE
PROVISIONS OF CHAPTER 489, FLORIDA STATUTES

CASEY, SHAWN ANTHONY

S A CASEY CONSTRUCTION INC
2822 COMMERCE PARK DRIVE
SUITE 400
ORLANDO FL 32819

LICENSE NUMBER: CGC042180

EXPIRATION DATE: AUGUST 31, 2026

Always verify licenses online at MyFloridaLicense.com

ISSUED: 07/10/2024

Do not alter this document in any form.

This is your license. It is unlawful for anyone other than the licensee to use this document.

Detail by Entity Name

Florida Profit Corporation
S.A. CASEY CONSTRUCTION, INC.

Filing Information

Document Number	P06000021867
FEI/EIN Number	22-3921381
Date Filed	02/14/2006
State	FL
Status	ACTIVE
Last Event	AMENDMENT
Event Date Filed	12/21/2016
Event Effective Date	NONE

Principal Address

2822 COMMERCE PARK DRIVE
SUITE 400
ORLANDO, FL 32819

Changed: 02/02/2024

Mailing Address

2822 COMMERCE PARK DRIVE
SUITE 400
ORLANDO, FL 32819

Changed: 02/02/2024

Registered Agent Name & Address

RUTH, ALAN
2822 COMMERCE PARK DRIVE
SUITE 400
ORLANDO, FL 32819

Name Changed: 02/02/2024

Address Changed: 02/02/2024

Officer/Director Detail

Name & Address

Title PRESIDENT

RUTH, ALAN
2822 COMMERCE PARK DRIVE
SUITE 400
ORLANDO, FL 32819

Title VICE PRESIDENT

CASEY, IAN
2822 COMMERCE PARK DRIVE
SUITE 400
ORLANDO, FL 32819

Title SECRETARY

RUTH, ALAN
2822 COMMERCE PARK DRIVE
SUITE 400
ORLANDO, FL 32819

Title TREASURER

CASEY, SHAWN A
2822 COMMERCE PARK DRIVE
SUITE 400
ORLANDO, FL 32819

Annual Reports

Report Year	Filed Date
2022	02/09/2022
2023	02/21/2023
2024	02/02/2024

Document Images

02/02/2024 -- ANNUAL REPORT	View image in PDF format
02/21/2023 -- ANNUAL REPORT	View image in PDF format
02/09/2022 -- ANNUAL REPORT	View image in PDF format
03/01/2021 -- ANNUAL REPORT	View image in PDF format
04/02/2020 -- INFO ONLY	View image in PDF format
03/27/2020 -- AMENDED ANNUAL REPORT	View image in PDF format
03/25/2020 -- AMENDED ANNUAL REPORT	View image in PDF format
01/22/2020 -- ANNUAL REPORT	View image in PDF format
03/18/2019 -- ANNUAL REPORT	View image in PDF format
01/15/2018 -- ANNUAL REPORT	View image in PDF format
01/18/2017 -- ANNUAL REPORT	View image in PDF format
12/21/2016 -- Amendment	View image in PDF format
03/03/2016 -- ANNUAL REPORT	View image in PDF format
01/29/2015 -- ANNUAL REPORT	View image in PDF format

01/29/2014 -- ANNUAL REPORT	View image in PDF format
02/25/2013 -- ANNUAL REPORT	View image in PDF format
11/13/2012 -- Amendment	View image in PDF format
01/23/2012 -- ANNUAL REPORT	View image in PDF format
03/16/2011 -- ANNUAL REPORT	View image in PDF format
04/28/2010 -- Amendment	View image in PDF format
04/23/2010 -- ANNUAL REPORT	View image in PDF format
04/30/2009 -- ANNUAL REPORT	View image in PDF format
04/24/2008 -- ANNUAL REPORT	View image in PDF format
04/25/2007 -- ANNUAL REPORT	View image in PDF format
02/14/2006 -- Domestic Profit	View image in PDF format

BID BOND

BID BOND

Bond No.: N/A

KNOW ALL MEN BY THESE PRESENTS that S.A. Casey Construction, Inc., as Contractor, duly authorized to conduct business in the State of Florida, whose principal place of business is located at 2822 Commerce Park Drive, Suite 400, Orlando, FL 32819, Tel.: (407) 240-6775, (hereinafter called "PRINCIPAL"), and Merchants National Bonding, Inc., as SURETY, duly authorized to conduct business in the State of Florida, whose principal place of business is located at 6700 Westown Parkway, West Des Moines, IA 50266-7754*, Tel: (515) 243-8171 (hereinafter called "SURETY"), are held and firmly bound unto the City of Port Orange, Florida, as CITY, a Florida municipal corporation, whose address is City of Port Orange, 1000 City Center Circle, Port Orange, Florida 32129, Tel: (386) 506-5501, (hereinafter called "OBLIGEE" or CITY", in the penal sum of Five Percent of Amount Bid---------- dollars and (------)/100 ($---5%---), lawful money of the United States, for the payment of which sum shall and truly be made, whereof PRINCIPAL and SURETY bind themselves, their heirs, executors, administrators, successors and assigns, jointly and severally, firmly by these presents.

THE CONDITION OF THIS OBLIGATION IS SUCH that, whereas the Principal has submitted the accompanying bid, dated January 14th, 20 25, for:

Project Name/Bid No.: ITB #25-02, CONSTRUCTION OF FORESTRY BUILDING

Project Address: 2401 Bear Trail, Port Orange, FL 32128

Legal Description: See Attached

Description of Work: Construction of a new 5,226 Sq Ft. metal Forestry building and 6,631 Sq. Ft. of 6" stabilized access path on the City's wellfield property.

NOW, THEREFORE,

A. If the Principal shall not withdraw said bid withing one hundred twenty (120) days after date of opening of the same, and shall within ten (10) days after the prescribed forms are presented to it for signature, enter into a written contract with the City in accordance with the bid as accepted, and give bonds with good and sufficient surety or sureties, as may be required, for the faithful performance and proper fulfillment of such contract, then the above obligations shall be void and of no effect, otherwise to remain in full force and virtue.

B. In the event of the withdrawal of said bid within the period specified, or the failure to enter into such contract and give such bonds withing the time specified, if the principal shall pay the City the difference between the amount specified in said bid and the amount for which the City may procure the required work and supplies. If the latter amount be in excess of the former, then the above obligations then the above obligations shall be void and of no effect, otherwise to remain in full force and virtue.

IN WITNESS WHEREOF, the above parties have executed this instrument under their several seals, this 14th day of January, 20 25, the name and corporate seal of each corporate party being hereto affixed and these presents duly signed by its undersigned representative, pursuant to authority of its governing body.

Note: If the firm is a sole ownership or partnership including limited liability company, two (2) witnesses are required to attest the signature. If the firm is a corporation, then the corporate secretary shall attest and affix the corporate seal (Attach power of attorney to the original bid bond and financial statement of Surety Company).

*PO Box 14498
Des Moines, IA 50306-3498

PRINCIPAL: S.A. Casey Construction, Inc.

Signature

Ian Casey, Vice-President

Corporate Officer & Title

ATTEST:

Signature

Corporate Secretary (Affix Corporate Seal)

WITTNESSESS:

SURETY: Merchants National Bonding, Inc.

Jeffrey W. Reich

Attorney-in-Fact (signature)

Jeffrey W. Reich*, Attorney-In-Fact

Name & Title

Jeffrey W. Reich*, FL Licensed Resident Agent

Name of Local Resident Agent

PO Box 14498, Des Moines, IA 50306-3498

City, State, Zip

(515) 243-8171

Telephone:

A.M. Best No.: 012599 NAIC No.: 11595

ATTEST:

Susan L. Reich

Signature

Susan L. Reich

Corporate Secretary (Affix Corporate Seal)

*Inquiries: 407-786-7770

STATE OF Florida

COUNTY OF Orange

Before me this day personally appeared Jeffrey W. Reich (affiant), who, being duly sworn, deposes and says that he/she is the Attorney-in-Fact for the Merchants National Bonding, Inc. (corporate surety) and that this person has been authorized by Merchants National Bonding, Inc. (corporate surety) to execute the foregoing bond on behalf of the Contractor named therein in favor of the City of Port Orange, Florida.

Jeffrey W. Reich

Signature of Affiant Jeffrey W. Reich

The foregoing instrument was acknowledged before me by means of ☒physical presence or ☐online notarization, this 14th day of January, 2025, by Jeffrey W. Reich and who:

☒Is personally known to me; or ☐has produced N/A as identification.

Notary Public State of Florida
Elizabeth Luu Karoly
My Commission HH 283384
Expires 7/9/2026

Notary Public, State of FL

Printed, typed or stamped name, commission and expiration: Elizabeth Luu Karoly, Commission No. HH 283384, Exp. 07/09/2026

END OF BID BOND

This document must be completed and returned with your Submittal

MERCHANTS BONDING COMPANY™

MERCHANTS NATIONAL BONDING, INC.

Statements of Admitted Assets, Liabilities, and Surplus - Statutory Basis

	Dec. 31, 2023
Admitted Assets	
Bonds	$ 45,039,852
Stocks	10,519,227
Cash and Short-Term Investments	8,162,091
Other Invested Assets	230,795
Subtotal, Cash and Invested Assets	63,951,965
Premiums in the Course of Collection	12,414,022
Amounts Recoverable from Reinsurers	1,029,847
Other Assets	728,179
Total Admitted Assets	$ 78,124,013
Liabilities & Surplus	
Losses and Loss Adjustment Expense Reserves	$ 5,427,016
Unearned Premiums	12,285,773
Ceded Reinsurance Premiums Payable	14,410,664
Other Liabilities	12,036,764
Total Liabilities	44,160,217
Common Capital Stock	3,000,000
Gross Paid In and Contributed Surplus	6,088,655
Unassigned Funds (Surplus)	24,875,141
Total Surplus	33,963,796
Total Liabilities and Policyholders' Surplus	$ 78,124,013

I, Elisabeth Sandersfeld, Treasurer of Merchants National Bonding, Inc., do hereby certify that the foregoing is a true and correct statement of the balance sheet of said Corporation as of December 31, 2023, to the best of my knowledge and belief.

Elisabeth Sandersfeld, CFO & Treasurer

3/22/2024
Date

street 6700 Westown Parkway, West Des Moines, IA 50266-7754
mailing P.O. Box 14498, Des Moines, IA 50306-3498
toll free 800.678.8171
local 515.243.8171
fax 515.243.3854
email info@merchantsbonding.com
website merchantsbonding.com

MERCHANTS BONDING COMPANY™

POWER OF ATTORNEY

Know All Persons By These Presents, that MERCHANTS BONDING COMPANY (MUTUAL) and MERCHANTS NATIONAL BONDING, INC., both being corporations of the State of Iowa, d/b/a Merchants National Indemnity Company (in California only) (herein collectively called the "Companies") do hereby make, constitute and appoint, individually,

Cheryl A Foley; Emily J Golecki; Jeffrey W Reich; Kim E Niv; Lisa A Roseland; Nathan K Reich; Robert P OLinn; Sarah K OLinn; Sonja Amanda Floree Harris; Susan L Reich; Teresa L Durham

their true and lawful Attorney(s)-in-Fact, to sign its name as surety(ies) and to execute, seal and acknowledge any and all bonds, undertakings, contracts and other written instruments in the nature thereof, on behalf of the Companies in their business of guaranteeing the fidelity of persons, guaranteeing the performance of contracts and executing or guaranteeing bonds and undertakings required or permitted in any actions or proceedings allowed by law.

This Power-of-Attorney is granted and is signed and sealed by facsimile under and by authority of the following By-Laws adopted by the Board of Directors of Merchants Bonding Company (Mutual) on April 23, 2011 and amended August 14, 2015 and April 27, 2024 and adopted by the Board of Directors of Merchants National Bonding, Inc., on October 16, 2015 and amended on April 27, 2024.

"The President, Secretary, Treasurer, or any Assistant Treasurer or any Assistant Secretary or any Vice President shall have power and authority to appoint Attorneys-in-Fact, and to authorize them to execute on behalf of the Company, and attach the seal of the Company thereto, bonds and undertakings, recognizances, contracts of indemnity and other writings obligatory in the nature thereof."

"The signature of any authorized officer and the seal of the Company may be affixed by facsimile or electronic transmission to any Power of Attorney or Certification thereof authorizing the execution and delivery of any bond, undertaking, recognizance, or other suretyship obligations of the Company, and such signature and seal when so used shall have the same force and effect as though manually fixed."

In connection with obligations in favor of the Florida Department of Transportation only, it is agreed that the power and aut hority hereby given to the Attorney-in-Fact includes any and all consents for the release of retained percentages and/or final estimates on engineering and construction contracts required by the State of Florida Department of Transportation. It is fully understood that consenting to the State of Florida Department of Transportation making payment of the final estimate to the Contractor and/or its assignee, shall not relieve this surety company of any of its obligations under its bond.

In connection with obligations in favor of the Kentucky Department of Highways only, it is agreed that the power and authority hereby given to the Attorney-in-Fact cannot be modified or revoked unless prior written personal notice of such intent has been given to the Commissioner-Department of Highways of the Commonwealth of Kentucky at least thirty (30) days prior to the modification or revocation.

In Witness Whereof, the Companies have caused this instrument to be signed and sealed this 29th day of July , 2024 .

MERCHANTS NATIONAL BONDING, INC. -o- 2003 ☆

MERCHANTS BONDING COMPANY (MUTUAL) -o- 1933 ☆

MERCHANTS BONDING COMPANY (MUTUAL)
MERCHANTS NATIONAL BONDING, INC.
d/b/a MERCHANTS NATIONAL INDEMNITY COMPANY

By Larry Taylor

President

STATE OF IOWA
COUNTY OF DALLAS ss.

On this 29th day of July 2024 , before me appeared Larry Taylor, to me personally known, who being by me duly sworn did say that he is President of MERCHANTS BONDING COMPANY (MUTUAL) and MERCHANTS NATIONAL BONDING, INC.; and that the seals affixed to the foregoing instrument are the Corporate Seals of the Companies; and that the said instrument was signed and sealed in behalf of the Companies by authority of their respective Boards of Directors.

NOTARIAL SEAL IOWA

Penni Miller
Commission Number 787952
My Commission Expires
January 20, 2027

Notary Public

(Expiration of notary's commission does not invalidate this instrument)

I, Elisabeth Sandersfeld, Secretary of MERCHANTS BONDING COMPANY (MUTUAL) and MERCHANTS NATIONAL BONDING, INC., do hereby certify that the above and foregoing is a true and correct copy of the POWER-OF-ATTORNEY executed by said Companies, which is still in full force and effect and has not been amended or revoked.

In Witness Whereof, I have hereunto set my hand and affixed the seal of the Companies on this 14th day of January , 2025 .

MERCHANTS NATIONAL BONDING, INC. -o- 2003 ☆

MERCHANTS BONDING COMPANY (MUTUAL) -o- 1933 ☆

Secretary

IMPORTANT: This certificate must be completed and returned by the Bidder, upon issuance of a Notice of Intent to Award by the Purchasing Department of the City of Port Orange.

HUMAN TRAFFICKING AFFIDAVIT
(SECTION 787.06, FLORIDA STATUTES)

STATE OF FLORIDA §
§
COUNTY OF VOLUSIA §

The undersigned ("Affiant"), on behalf of the entity listed below ("Entity"), after being duly sworn, hereby attests as follows:

1. My name is Ian Casey. I am over the age of Twenty-one years old. I am the VP (Title) of S.A. Casey Construction (Business Name), a non- governmental entity which does business in the State of Florida, hereinafter called the "Entity."
2. I have personal knowledge of each and every statement of fact contained herein, and each and every statement of fact is true and correct.
3. Entity does not use coercion, as defined in Section 787.06, Florida Statutes, for labor or services.
4. The undersigned is an officer or representative of the entity and is authorized to execute this affidavit on behalf of the Entity.
5. Under penalties of perjury, I declare that I have read the foregoing Human Trafficking Affidavit and that the facts stated herein are true.

Further Affiant sayeth not.

Date: Jan 31, 2025

Signed: _____
Print Name: Ian Casey
Title: VP

SUBSCRIBED AND SWORN before me by means of [X] physical presence or [_] online notarization on the 31st day of January, 2025 by Ian Casey as Vice President on behalf of SA Casey Construction who is personally known to me or who has produced _____ as identification.

(Notary Seal)

NOTARY PUBLIC STATE OF FLORIDA
MICHELE L. COLASUONNO
Commission # HH 358318
Expires May 12, 2027

Michele L. Colasuonno
Notary Public, State of Florida
Printed name, commission and expiration of commission term

LEASED EMPLOYEE AFFIDAVIT

EXHIBIT CONTRACT # 25-02

☑ **I hereby certify that I do not utilize an employee leasing company or employee leased employees. I further agree to notify the City in the event these circumstances change.**

OR

☐ **I affirm that an employee leasing company provides my workers' compensation coverage. I further understand that my contract with the employee leasing company limits my workers' compensation coverage to enrolled worksite employees only. My leasing arrangement does not cover un-enrolled worksite employees, independent contractors, uninsured sub-contractors, or casual labor exposure.**

I hereby certify that 100% of my workers are covered as worksite employees with the employee leasing company. I certify that I do not hire any casual or uninsured labor outside the employee leasing arrangement. I agree to notify the City in the event that I have any workers not covered by the employee leasing workers' compensation policy. In the event that I have any workers not subject to the employee leasing arrangement, I agree to obtain a separate workers' compensation policy to cover these workers. I further agree to provide the City with a certificate of insurance providing proof of workers' compensation coverage prior to these workers entering any City jobsite.

I further agree to notify the City if my employee leasing arrangement terminates with the employee leasing company and I understand that I am required to furnish proof of replacement workers' compensation coverage prior to the termination of the employee leasing arrangement.

I certify that I have workers' compensation coverage for all of my workers through the employee leasing arrangement specified below:

Name of Employee Leasing Company: _____

Worker' Compensation Carrier: _____

A.M. Best Rating Carrier: _____

Inception Date of Leasing Agreement: _____

I further agree to notify the City in the event that I switch employee-leasing companies. I recognize that I have an obligation to supply an updated workers' compensation certificate to the City that documents the change of carrier.

I hereby attest that the information provided in this affidavit is accurate. In addition, I certify that I have read and understand the above statements regarding my responsibility under the Workers' Compensation coverage.

Signature of Contractor: _____

Signature of Owner/Officer: _____

Title: Vice-President Date: 1/31/2025

AFFIDAVIT REGARDING WORKER'S COMPENSATION

State of Florida County of Orange

I, Ian Casey, being duly sworn according to law, deposes and says (it, he, she, they) have accepted the Workers' Compensation laws of the State of Florida, with its supplements and amendments and has insured (its, his, her, their) liability there under accordance with the terms of said Laws with the FCCI Insurance Company Company, under the terms of Policy Number WC0 10006944 for a period from April 2, 2024 to April 2, 2025.

WITNESS:
By:
Company: S.A. Casey Construction, Inc.

CONTRACTOR:
By:
Company: S.A. Casey Construction, Inc.
Name/Title: Ian Casey, VP

STATE OF Florida

COUNTY OF: Orange

The foregoing instrument was acknowledged before me by means of ☒physical presence or ☐online notarization, this 31st day of January, 2025, by Ian Casey and who:

☒Is personally known to me; or ☐ has produced _____ as identification.

Michele L. Colasuonno

Notary Public, State of Florida

Printed, typed or stamped name, commission and expiration:

NOTARY PUBLIC STATE OF FLORIDA
MICHELE L. COLASUONNO
Commission # HH 358318
Expires May 12, 2027

ITB #25-02 Construction of Forestry Building

January 14, 2025 @ 2:30 PM

BID TABULATION

ITEM #	DESCRIPTION	UNIT OF MEASURE	NON-RESPONSIVE C2 Solutions, Inc.	Paul Culver Construction, Inc.	The Watauga Company	NON-RESPONSIVE Boulevard Contractors Corp.	A.G. Pifer Construction, Inc.	SA Casey Construction, Inc.
1	Base Bid: Construction of a new 5,226 Sq. Ft. metal Forestry Management storage building and 6,631 Sq. Ft. of 6" stabilized access path	Lump Sum	$827,924.00	$689,970.00	$679,000.00	$813,719.00	$688,000.00	$649,661.70
2	Additive Alternative #1: Install 3" of recycled asphalt pavement on top of the 6,631 Sq. Ft. 6" stabilized base.	Lump Sum	$31,300.00	$45,000.00	$25,000.00	$20,747.00	$21,098.40	$19,252.42

DISCLAIMER: THIS BID TABULATION INDICATES ONLY THE BIDS AS RECEIVED. ALL BIDS ARE SUBJECT TO VERIFICATION FOR ACCURACY AND FOR SPECIFICATION AND CONTRACT COMPLIANCE. NO CONCLUSIONS ABOUT CONTRACT AWARDS SHOULD BE DRAWN FROM THESE PRELIMINARY TABULATIONS.

Lead Buyer

Witness

NOTICE OF INTENT TO AWARD

ITB #25-02 Construction of Forestry Building

January 27, 2025

On January 14, 2025, the City of Port Orange received four (4) responsive bid submittals for **ITB #25-02 Construction of Forestry Building.**

After reviewing the responsive bids, City Staff has made a recommendation to award to:

S.A. Casey Construction, Inc.

Respectfully Submitted,

Jill Poolman, NIGP-CPP, CPPO, CPPB, FCCM
Purchasing Manager

"Failure to file a protest within the time prescribed in section 120.57(3), Florida Statutes, or failure to post the bond or other security required by law within the time allowed for filing a bond shall constitute a waiver of proceedings under chapter 120, Florida Statutes." The 72-hour posting requirement will elapse on January 30, 2025 at 9:00 AM EST.

FORESTRY MANAGEMENT
STORAGE BARN
CITY OF PORT ORANGE

VICINITY MAP

N

NTS

PROJECT SITE

SITE LOCATION MAP

N

NTS

100% CONSTRUCTION DOCUMENTS

JUNE 18, 2024

SCHEDULE OF DRAWINGS

G001	COVER SHEET / SCHEDULE OF DRAWINGS

CIVIL

1	COVER SHEET
S1	TOPOGRAPHIC SURVEY
S2	TOPOGRAPHIC SURVEY
2	DEMOLITION & EROSION CONTROL PLAN
3	CIVIL PLAN
4	PAVING & DRAINAGE DETAILS
5	PAVING & DRAINAGE DETAILS
6	WATER STANDARD DETAILS
7	REUSE DETAILS
8	REUSE DETAILS

ARCHITECTURAL

A100	ARCHITECTURAL SITE PLAN
A101	FLOOR PLAN / ROOF PLAN
A300	BUILDING ELEVATIONS
A400	BUILDING SECTIONS
A500	DOOR SCHEDULE/DETAILS

STRUCTURAL

S1.0	GENERAL STRUCTURAL NOTES
S2.0	FOUNDATION PLAN
SD1.0	DETAILS

MECHANICAL

M0.1	MECHANICAL GENERAL INFORMATION
M0.2	MECHANICAL SCHEDULES AND DETAILS
M1.1	MECHANICAL FLOOR PLAN

ELECTRICAL

E-01	ELECTRICAL SITE PLAN
E-02	ELECTRICAL PLAN AND SCHEDULES

GENERAL NOTES

ALL CONSTRUCTION TO CONFORM AS APPLICABLE TO THE FOLLOWING CODES:

FLORIDA BUILDING CODE: - EIGHTH EDITION (2023) BUILDING
FLORIDA BUILDING CODE: - EIGHTH EDITION (2023) ACCESSIBILITY
FLORIDA BUILDING CODE: - EIGHTH EDITION (2023) FBC ENERGY CONSERVATION
FLORIDA BUILDING CODE: - EIGHTH EDITION (2023) FUEL GAS
FLORIDA BUILDING CODE: - EIGHTH EDITION (2023) MECHANICAL
FLORIDA BUILDING CODE: - EIGHTH EDITION (2023) PLUMBING
FLORIDA FIRE PREVENTION CODE - EIGHTH EDITION (2023)
NFPA NATIONAL ELECTRIC CODE (2020)

HALL & OGLE ARCHITECTS, INC.
208 MAGNOLIA AVENUE
DAYTONA BEACH, FLORIDA 32114
www.hoarchitects.com
PH:(386) 255-6163
FAX:(386)257-5650
AA-C000925

REVISIONS

NO.	DATE	DESCRIPTION

DOCUMENT HISTORY

FORESTRY MANAGEMENT
STORAGE BARN
CITY OF PORT ORANGE
4655 CITY CENTER CIRCLE
PORT ORANGE, FL

ARCH/ENGR OF RECORD
JOHN E. HALL AR0010727
DAVID D. OGLE AR93986

DESIGNED BY	DRAWN BY
DO	JB
ISSUE DATE	AE PROJECT NUMBER
18-JUNE-2024	2315

SHEET TITLE
COVER SHEET / SCHEDULE OF DRAWINGS

DRAWING NO.
G001

CITY OF PORT ORANGE
FORESTRY DEPARTMENT BUILDING
PORT ORANGE, FLORIDA
FINAL SITE PLAN

GENERAL NOTES

1.) BOUNDARY, TOPOGRAPHY, AND TREE LOCATION BASED ON INFORMATION PROVIDED BY THE CITY OF PORT ORANGE.

2.) CONTRACTOR TO VERIFY EXISTING UTILITIES PRIOR TO CONSTRUCTION AND TO REPORT ANY DISCREPANCIES TO DESIGN ENGINEER.

3.) WHERE EXISTING GRADES ARE SHOWN TO BE INCREASED BY FILL IN AREAS OF EXISTING UTILITIES, ALL VALVES AND BOXES, MANHOLES LIDS AND COVERS AND SIMILAR APPURTENANCES MUST BE ADJUSTED ACCORDINGLY TO MATCH THE FINISHED GRADE.

4.) POTABLE WATER MAINS LARGER THAN 4" DIA. AND GREATER ARE TO BE PVC DR-18 C-900. 2" POTABLE WATER SERVICES SHALL BE POLYETHYLENE TUBING (BLUE UNLESS OTHERWISE INDICATED). RECLAIMED WATER MAINS ARE TO BE PURPLE P.V.C. DR-18 C-900. 1-1/2" REUSE WATER SERVICES SHALL BE POLYETHYLENE TUBING (PURPLE).

5.) TRAFFIC CONTROL SIGNS TO BE IN ACCORDANCE WITH FDOT STANDARDS & SPECIFICATIONS

6.) ALL CONSTRUCTION SHALL BE IN CONFORMANCE WITH THE CITY OF PORT ORANGE STANDARD CONSTRUCTION DETAILS LATEST VERSION UNLESS OTHERWISE SPECIFICALLY APPROVED.

7.) THE UTILITY COMPANIES WITH SERVICE IN THE AREA ARE LISTED BELOW;

SPECTRUM	(386) 760-9941
TECO PEOPLE GAS INC.	(386) 671-2253
BELL SOUTH	(386) 252-7913
VOLUSIA COUNTY SIGNAL SHOP	(386) 239-6537
FPL FIBER NET LLC	(305) 522-3249
FDOT ITS/DASH - MIKE SMITH	(386) 943-5360

8.) ALL PROPOSED UTILITIES ARE TO BE INSTALLED UNDERGROUND.

9.) ALL NON-PAVED AREAS SHALL BE PLANTED, GRASSED, OR MULCHED.

10.) STAKED TURBIDITY BARRIERS SHOWN ARE THE MINIMUM EROSION CONTROL FEATURES, OTHERS MAY BE NECESSARY DEPENDING ON SITE CONDITIONS AT THE TIME OF CONSTRUCTION.

11.) PROJECT ADDRESS: 1726 DUNLAWTON AVENUE PORT ORANGE, FLORIDA 32127.

12.) CONTRACTOR SHALL SCHEDULE A CITY REPRESENTATIVE TO BE PRESENT TO OBSERVE PIGGING OF WATER LINES.

13.) CONSTRUCTION SEQUENCING NOTES:
1. IF ANY MUCK OR MUCK-LIKE MATERIAL IS DISCOVERED, IT WILL BE REQUIRED TO BE REMOVED, BACKFILLED WITH APPROPRIATE FILL, COMPACTED, & TESTED USING AASHTO T-180 MODIFIED PROCTOR METHOD.
2. PRIOR TO THE FILLING ON FUTURE ROADWAY & LOT AREAS, THE REMOVAL OF ANY VEGETATION & TOP SOIL MUST BE PERFORMED.
3. A SIGNED, SEALED, & DATED LETTER FROM A SOILS ENGINEER OR ENGINEER OF RECORD CERTIFYING THAT THE AREAS TO BE FILLED HAVE BEEN STRIPPED OF ORGANIC MATERIAL MUST BE SUBMITTED TO THE CITY PRIOR TO FILLING.
4. NO BURYING OF ANY ORGANIC MATERIALS IS PERMITTED.
5. ANY BURNING OF ANY MATERIALS ON-SITE MUST BE APPROVED & PERMITTED BY THE FIRE MARSHALL. A PERMIT MUST BE OBTAINED ON A DAILY BASIS PRIOR TO THE DAY OF THE ANTICIPATED BURNING.
6. ALL FILLING IS TO BE PERFORMED IN ONE FOOT LIFTS. THE COMPACTION REQUIREMENT IS 98% FOR PAVED AREAS & 95% FOR UNPAVED AREAS & FUTURE BUILDING PADS BASED ON THE AASHTO T-180 MODIFIED PROCTOR TEST.
7. TEMPORARY FILL STOCKPILING IS NOT PERMITTED WITH MAXIMUM HEIGHT GREATER THAN SIX FEET, IN ACCORDANCE WITH THE LAND DEVELOPMENT CODE, ALL STOCKPILES SHALL BE STABILIZED OR COVERED EACH WORK DAY.
8. AT A MINIMUM, STOCKPILES THAT WILL REMAIN IN PLACE IN EXCESS OF 20 DAYS, SHOULD BE SEEDED & MULCHED IMMEDIATELY UPON PLACEMENT OF THE FINAL LIFT AND SHALL HAVE A MAX. HEIGHT OF 6 FEET.
9. SOILS ARE TO BE STABILIZED BY WATER OR OTHER MEANS DURING CONSTRUCTION. THIS IS INTENDED TO REDUCE SOIL EROSION & THE IMPACT TO NEIGHBORING COMMUNITIES.
10. UPON COMPLETION OF EACH PORTION OF A PROJECT WITHIN A PHASE OF THE PROJECT, SEEDING & MULCHING AND/OR SODDING IS TO BE PERFORMED PRIOR TO COMMENCING THE NEXT PHASE.
11. ONCE AN AREA IS SEEDED OR SODDED, IT MUST BE MAINTAINED TO ALLOW THE GRASS TO GROW.
12. ALL NON-PAVED AREA MUST BE PLANTED, GRASSED, OR MULCHED.
13. ALL PROPOSED UTILITIES ARE TO BE INSTALLED UNDERGROUND.
14. ALL STORMWATER PIPING CONNECTION JOINTS MUST BE WRAPPED WITH FILTER FABRIC TO PROHIBIT THE SEEPAGE OF SEDIMENTS THROUGH THE JOINT. THE WRAP SHOULD BE A MINIMUM OF 36 INCHES IN WIDTH AND INSTALLED WITH AN OVERLAP OF AT LEAST 18 INCHES.

14.) FLOOD ZONE: "X", PER THE FLOOD INSURANCE RATE MAP FOR THE CITY OF PORT ORANGE, VOLUSIA COUNTY, FLORIDA, PANEL NUMBER 12127C0507J, EFFECTIVE DATE: SEPTEMBER 29TH, 2017.

15.) ALL SIGNAGE TO BE APPROVED BY SEPARATE PERMIT.

16.) SITE AND BUILDING CONTRACTORS SHALL USE THE CITY APPROVED ROLL-OFF DUMPSTER PROVIDERS FROM APPROVED LIST: https:/www.portorange.org/Document Center/3592/Approved-Roll-off-vendors/portorange/

17.) ALL BUILDING PADS SHALL BE EXCAVATED AND BACK FILLED WITH CLEAN MATERIAL, COMPACTED AND ROLLED TO ACHIEVE COMPACTION.

BUILDING DEPARTMENT NOTES

1. REVIEW FOR APPLICABLE CODE REQUIREMENTS FOR PROPOSED BUILDINGS WILL BE PERFORMED AT THE TIME OF PERMIT SUBMITTAL.

2. SEPARATE PERMIT APPLICATIONS ARE REQUIRED FOR NEW BUILDINGS, SIGNS, LIGHT POLES, FENCING, ETC.

3. APPROVED CITY OF PORT ORANGE DUMPSTER VENDOR MUST BE USED FOR DEBRIS REMOVAL.

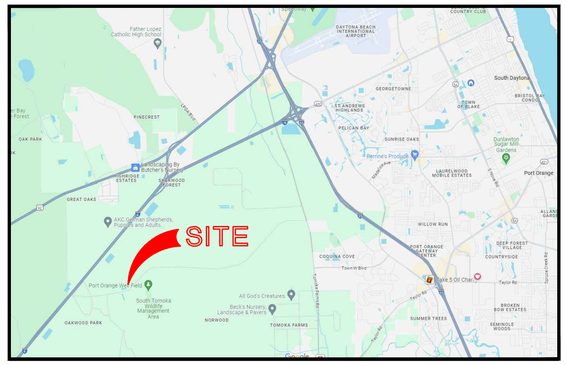

VICINITY MAP

ENGINEER/LANDSCAPE ARCHITECT

PARKER MYNCHENBERG & ASSOCIATES, INC.
PARKER MYNCHENBERG P.E. #32645
PARKER MYNCHENBERG L.A. #1553
CERTIFICATE OF AUTHORIZATION NUMBER: 00003910
1729 RIDGEWOOD AVENUE
HOLLY HILL, FL 32117
(386)677-6891 FAX (386)677-2114
EMAIL: info@parkermynchenberg.com

SURVEYOR:

SLIGER & ASSOCIATES, INC.
JOSEPH E. ZAPERT, P.L.S., PRESIDENT
3921 NOVA ROAD
PORT ORANGE, FL 32127
(386) 761-5385 FAX (386) 760-0619
E:MAIL: jzapert@sligerassociates.com

ARCHITECT:

HALL & OGLE ARCHITECTS
DAVID OGLE JR. PRINCIPAL
NCARB, LEED AP
(386)255-6163 EXT. 2
FAX (386)257-5650
208 MAGNOLIA AVENUE
DAYTONA BEACH, FLORIDA 32114
EMAIL: dogle@hoarchitects.com
WEBSITE: www.hoarchitects.com

PROJECT DESCRIPTION:

CONSTRUCT A 5,226 S.F. METAL STORAGE BUILDING AND STABILIZED ACCESS PATH ON THE CITY'S WELL FIELD PROPERTY.

PROJECT NAME: CITY OF PORT ORANGE FORESTRY DEPARTMENT BUILDING
PARCEL NUMBER: 6220-00-00-0020
PROJECT ADDRESS: 2401 BEAR TRAIL
PORT ORANGE, FL 32128
EXISTING ZONING: F-C (FLOODPLAIN-CONSERVATION)
PROJECT CONTACT: STEVE EDGAR (FORESTRY SUPERVISOR)
CITY OF PORT ORANGE
1000 CITY CENTER CIRCLE
PORT ORANGE, FLORIDA 32129
PHONE:(386) 506-5960
E:MAIL: SEDGAR@portorange.org

IMPERVIOUS AREA:

PROPOSED STABILIZED ACCESS =	6,631 SF.
PROPOSED BUILLDING =	5,226 SF.
TOTAL PROPOSED IMPERVIOUS =	11,857 SF.

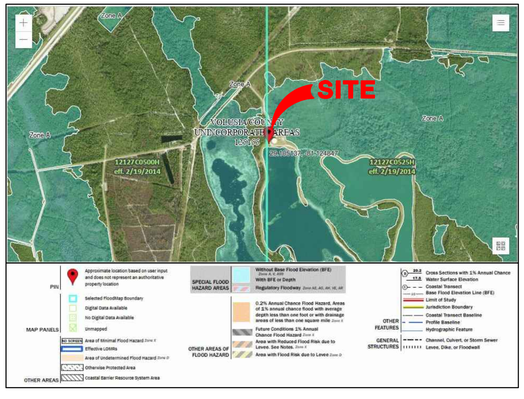

FLOOD MAP

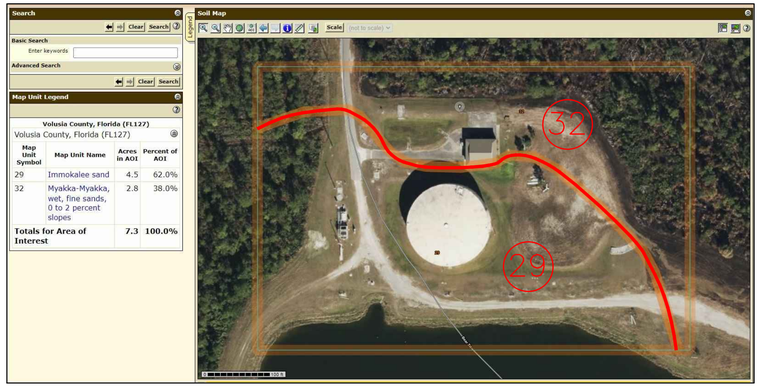

SOILS MAP

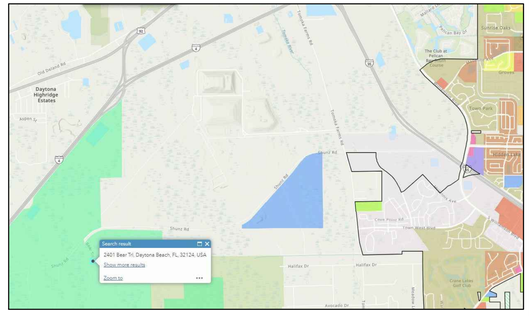

ZONING MAP

INDEX TO DRAWINGS

SHEET NO.	DESCRIPTION
1	COVER SHEET
S1-S2	BOUNDARY & TOPOGRAPHIC SURVEY
2	DEMOLITION & EROSION CONTROL PLAN
3	CIVIL PLAN
4-5	PAVING & DRAINAGE DETAILS
6	WATER STANDARD DETAILS
7-8	REUSE WATER STANDARD DETAILS

NO.	DATE	DESCRIPTION	BY
2	7/8/24	REVISED PER CITY COMMENTS	BVB
1	5/16/24	REVISED PER CITY COMMENTS	JD

REVISIONS

PARKER MYNCHENBERG & ASSOCIATES, INC.
PROFESSIONAL ENGINEERS * LANDSCAPE ARCHITECTS
1729 RIDGEWOOD AVENUE - HOLLY HILL, FLORIDA 32117
(386) 677-6891 FAX (386) 677-2114 www.parkermynchenberg.com
PARKER MYNCHENBERG P.E. #32645 PARKER MYNCHENBERG L.A. #1553
STEVE BUSWELL P.E. #53985 R.L.A. #6667011
CERTIFICATE OF AUTHORIZATION NUMBER 00003910

CITY OF PORT ORANGE
FORESTRY DEPARTMENT BUILDING
PORT ORANGE * FLORIDA

COVER SHEET

1
SHEET NO.

File No.
Drawn By: BVB
Date: 10/25/2023
SCALE: NONE

SEAL

TOPOGRAPHIC SURVEY

FOR

HALL AND OGLE ARCHITECTS
&
THE CITY OF PORT ORANGE

A PORTION OF

SECTION 20–TOWNSHIP 16 SOUTH–RANGE 32 EAST
VOLUSIA COUNTY, FLORIDA

LOCATION

2401 BEAR TRAIL, PORT ORANGE, FLORIDA

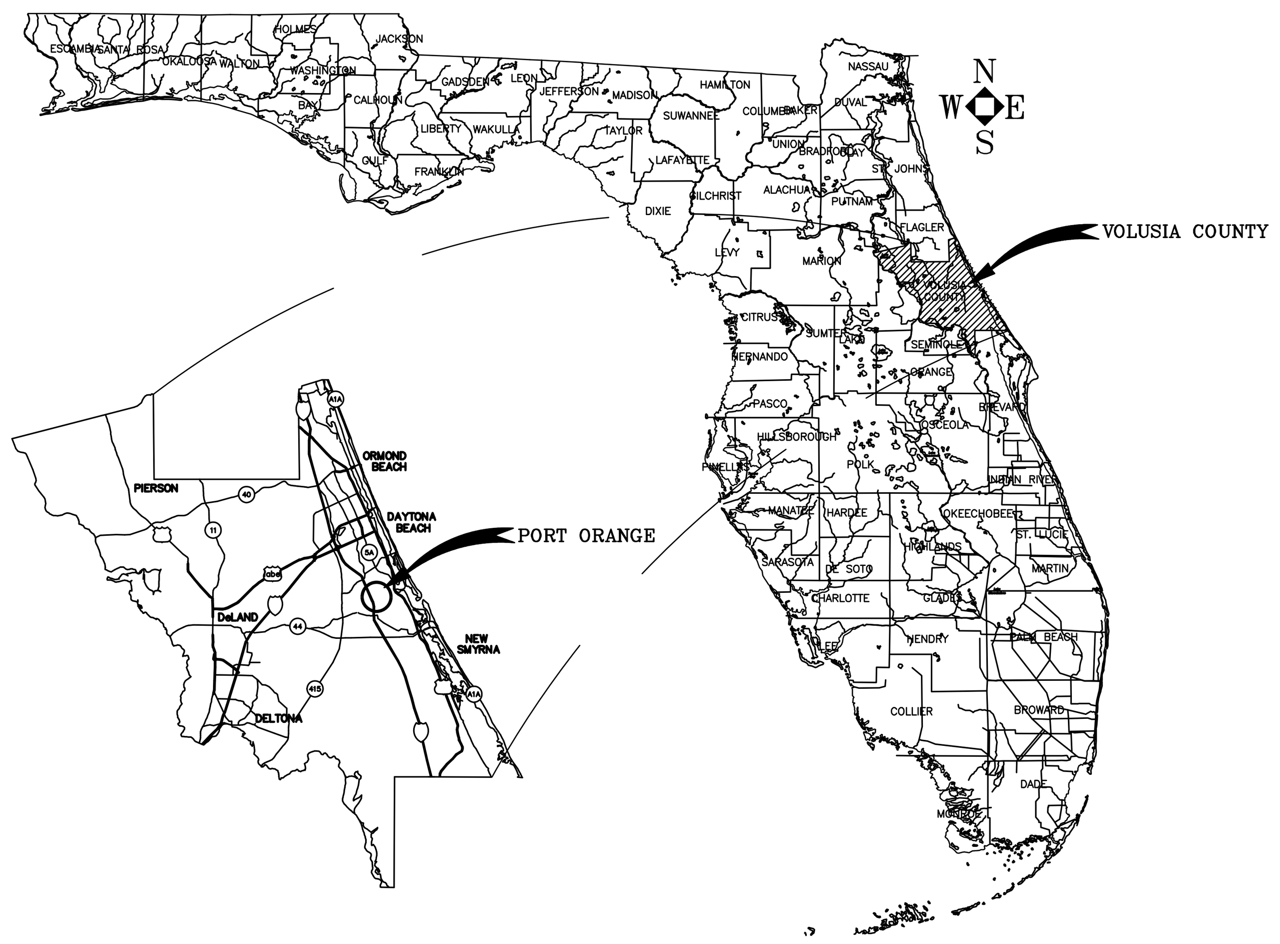

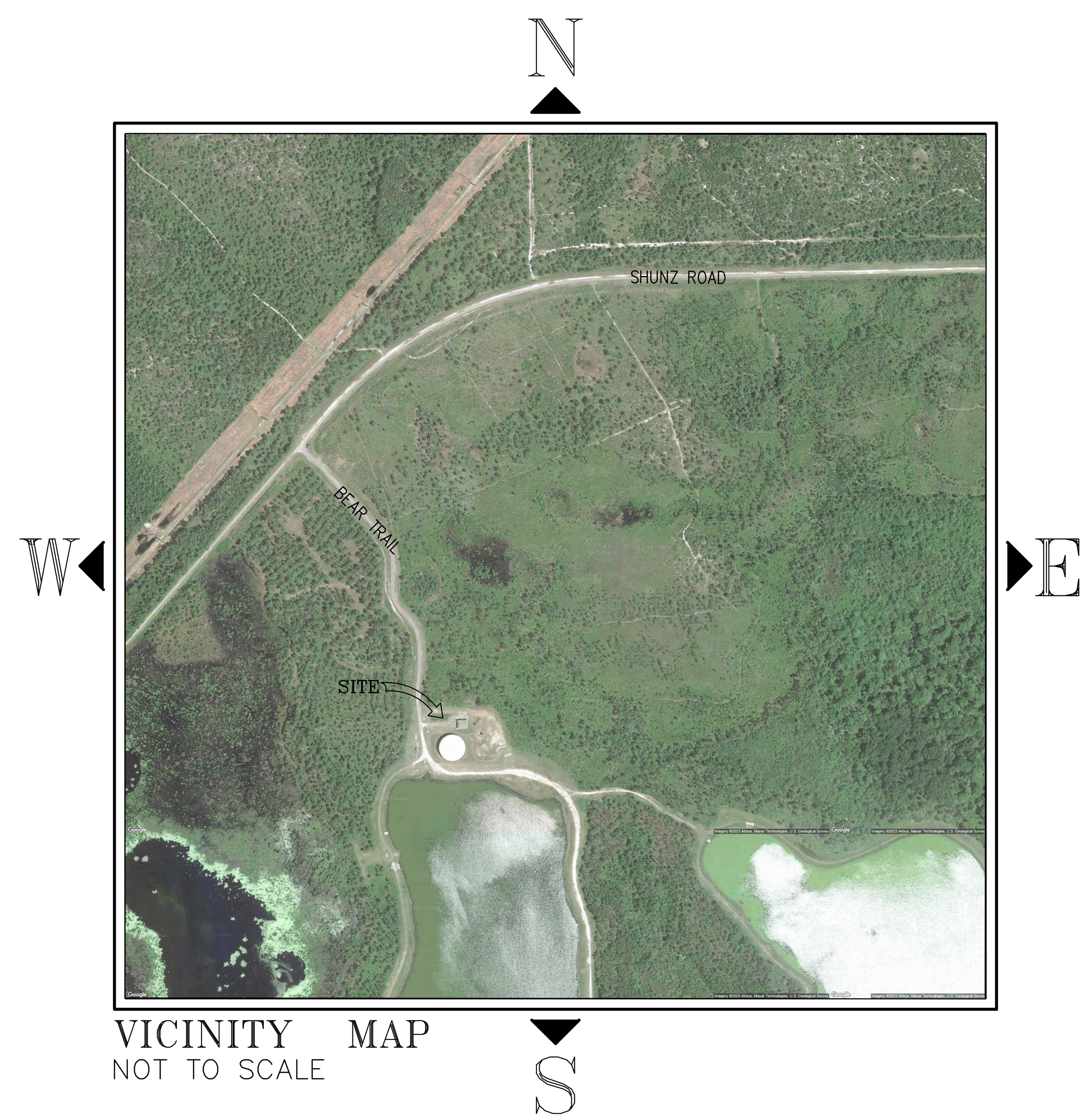

VICINITY MAP
NOT TO SCALE

LEGAL DESCRIPTION OF OVERALL SITE:

ORIGINAL RECORDS BOOK 7670, PAGE 4748

A PORTION OF SECTION 19 AND SECTION 20, TOWNSHIP 16 SOUTH, RANGE 32 EAST, VOLUSIA COUNTY, FLORIDA, DESCRIBED AS FOLLOWS:

BEGIN AT THE NORTHWEST CORNER OF SECTION 20, TOWNSHIP 16 SOUTH, RANGE 32 EAST; THENCE RUN N89°35'12"E ALONG THE NORTH LINE OF SAID SECTION 20, A DISTANCE OF 107.01 FEET; THENCE DEPART SAID NORTH LINE S27°27'51"E, 3.23 FEET; THENCE S15°13'28"E, 54.33 FEET; THENCE S06°30'27"E, 35.22 FEET; THENCE S15°38153"E, 34.39 FEET; THENCE S30°46'39"E, 55.62 FEET; THENCE S29°09'45"E, 82.78 FEET; THENCE S22°53'02"E, 19.93 FEET; THENCE S34°28136"E, 27.22 FEET; THENCE S54°0627"E, 27.38 FEET; THENCE S65°19'53"E, 26.35 FEET; THENCE S41°29'06"E, 65.67 FEET; THENCE S09°5820"E, 68.77 FEET; THENCE S21°23'36"W, 62.71 FEET; THENCE S39°40'05"W, 65.69 FEET; THENCE S15°29153"E, 32.44 FEET; THENCE S21°30'27"E, 87.43 FEET; THENCE S68°29'33"W, 50.00 FEET; THENCE S21°30127"E, 10.40 FEET; THENCE S74°56'52"W, 13.86 FEET; THENCE S15°35'14"E, 13.36 FEET; THENCE N75°32'13"E, 15.27 FEET; THENCE S21°30'27"E, 16.79 FEET; THENCE S22°02'05"E, 67.62 FEET; THENCE S75°51'42"W, 30.87 FEET; THENCE S14°15'54"E, 14.84 FEET; THENCE N75°51142"E, 32.89 FEET; THENCE S22°02'05"E, 21.35 FEET; THENCE S12°30'08"E, 64.28 FEET; THENCE S69°56123"W, 21.18 FEET; THENCE S20°26'22"E, 13.45 FEET; THENCE N69°58'02"E, 81.67 FEET; THENCE S14°17'50"E, 147.34 FEET; THENCE S05°34'53"E, 201.04 FEET; THENCE S18°29142"W, 116.16 FEET; THENCE S25°30'38"W, 92.40 FEET; THENCE S18°21122"W, 182.66 FEET; THENCE S01°3220"E, 25.60 FEET; THENCE S07°17'55"W, 104.95 FEET; THENCE S15°46'35"W, 74.64 FEET; THENCE S04°39145"W, 136.41 FEET; THENCE S02°23'21"E, 68.03 FEET; THENCE S20°25'17"E, 80.72 FEET; THENCE S24°09'30"E, 68.44 FEET; THENCE S09°21140"W, 124.58 FEET; THENCE S04°09134"W, 95.96 FEET; THENCE S04°50'46"E, 71.80 FEET; THENCE S06°35'39"W, 89.07 FEET; THENCE S10°12'37"E, 116.74 FEET; THENCE S17°16'05"E, 72.31 FEET; THENCE S01°03'36"W, 128.16 FEET; THENCE S21°22'42"E, 115.62 FEET; THENCE S30°29'42"E, 109.40 FEET; THENCE S22°55'34"E, 66.51 FEET; THENCE S49°03106"E, 283.52 FEET; THENCE S38°55100"E, 100.01 FEET; THENCE N51°05'00"E, 16.00 FEET; THENCE S38°55'00"E, 93.67 FEET; THENCE S22°03'39"E, 179.99 FEET; THENCE S33°5528"E, 121.28 FEET; THENCE S14°19'01"E, 373.85 FEET; THENCE S01°34'01"E, 108.79 FEET; THENCE S23°28'57"E, 92.48 FEET; THENCE S31°41'03"E, 111.94 FEET; THENCE S30°09'27"E, 235.82 FEET; THENCE S02°21'39"E, 87.69 FEET; THENCE S02°42'45"E, 151.31 FEET; THENCE S06°36150"E, 83.32 FEET; THENCE S09°53155"E, 177.30 FEET; THENCE S17°53'01"E, 99.64 FEET; THENCE S02°23'16"E, 154.99 FEET; THENCE S15°36'01"W, 40.74 FEET TO THE SOUTH LINE OF SAID SECTION 20; THENCE S89°18153"W ALONG SAID SOUTH LINE, 1275.27 FEET TO THE WEST LINE OF SAID SECTION 20; THENCE N00°33136"W ALONG SAID WEST LINE, 1672.14 FEET; THENCE DEPART SAID WEST LINE S89°2624"W, 250.00 FEET; THENCE N00°33136"W, 2558.30 FEET; THENCE N89°26'24"E, 250.00 FEET TO THE WEST LINE OF SAID SECTION 20; THENCE N00°33'36"W ALONG SAID WEST LINE, 1082.60 FEET TO THE POINT OF BEGINNING.

CONTAINING 88.207 ACRES

LEGEND:

Symbol	Description
●	IRON ROD WITH CAP
○	IRON ROD
◉	IRON PIPE WITH CAP
◎	IRON PIPE
O	NAIL & DISK
	FOUND "X"/CUT IN CONCRETE
□	CONCRETE MONUMENT
△	DENOTES PC / PT
■	PERMANENT CONTROL POINT
	SITE BENCHMARK
	FIRE HYDRANT
	TRAFFIC SIGNAL ARM
Ⓑ	PARKING BOLLARD
GV	GAS VALVE
RUV	REUSE VALVE
SSV	SANITARY SEWER VALVE
HHE	HAND HOLE (ELECTRIC)
WM	WATER METER
GM	GAS METER
TB	TELEPHONE BOX
MB	MAIL BOX
TV	CABLE TELEVISION BOX
TSB	TRAFFIC SIGNAL BOX
WV	WATER VALVE
TR	TELEPHONE RISER
FOCB	FIBER OPTIC CABLE BOX
FOCV	FIBER OPTIC CABLE VAULT
ELP	ELECTRIC PANEL
FOCM	FIBER OPTIC CABLE MARKER
TPM	TELEPHONE CABLE MARKER
	SIGN
LP	LIGHT POLE
YL	YARD LIGHT
	UTILITY POLE
GA	GUY ANCHOR
EB	ELECTRIC SERVICE BOX
YD	YARD DRAIN
SSMH	SANITARY SEWER MANHOLE
SDMH	STORM DRAIN MANHOLE
GTMH	GREASE TRAP MANHOLE
EMH	ELECTRIC MANHOLE
UMH	UTILITY MANHOLE
CO	CLEAN OUT
FOC	FIBER OPTIC CABLE MANHOLE
RBO	REUSE BLOWOFF ASSEMBLY
▲	WETLANDS LOCATION
	EXISTING CONCRETE
0.00	EXISTING ELEVATION
Ⓦ	WELL

ABBREVIATIONS:

Abbr.	Meaning
W/	WITH
IRC	IRON ROD & CAP
IR	IRON ROD (NO CAP)
IPC	IRON PIPE & CAP
IP	IRON PIPE (NO CAP)
CM	CONCRETE MONUMENT
N&D	NAIL & DISK
FND	FOUND
MW	MONITORING WELL
ID	IDENTIFICATION
(TYP)	TYPICAL
SEC	SECTION
TWP	TOWNSHIP
RGE	RANGE
℄	CENTERLINE
LL	LANE LINE
BFP	BACKFLOW PREVENTER
ILLEG.	ILLEGIBLE
MB	MAP BOOK
PG	PAGE
ORB	OFFICIAL RECORDS BOOK
PB	PLAT BOOK
(P)	PLATTED DIMENSION
(D)	DEED DIMENSION
(M)	MEASURED DIMENSION
(C)	CALCULATED DIMENSION
(R)	RADIAL
(NR)	NON RADIAL
STA	STATION
EL	ELEVATION
INV	INVERT
STMH	STORM MANHOLE
ASPH	ASHPALT
FF	FINISHED FLOOR
GLM	GAS LINE MARKER
D	CENTRAL ANGLE
R	RADIUS
L	ARC LENGTH
CB	CHORD BEARING
CH	CHORD DISTANCE
SAN	SANITARY
MH	MANHOLE
MES	MITERED END SECTION
HDPE	HIGH DENSITY POLYETHYLENE
RCP	REINFORCED CONCRETE PIPE
CMP	CORRUGATED METAL PIPE
CPP	CORRUGATED PLASTIC PIPE
VCP	VITRIFIED CLAY PIPE
SWK	SIDEWALK
LB	LICENSED BUSINESS
DIP	DUCTILE IRON PIPE
PVC	POLYVINYL CHLORIDE
CONC	CONCRETE
RES	RESIDENCE
CO	CLEANOUT
ES	ELECTRIC SERVICE
CV	CHECK VALVE
IV	IRRIGATION VALVE
WV	WATER VALVE
RV	REUSE VALVE
WM	WATER METER
FH	FIRE HYDRANT
TC	TOP COVER
LP	LIGHT POLE
PP	POWER POLE
GA	GUY ANCHOR
TSP	TRAFFIC SIGNAL POLE
R/W	RIGHT OF WAY
DW	DRIVEWAY
TOB	TOP OF BANK
TOE	TOE OF SLOPE
CLS	CENTERLINE OF SWALE
A/C	AIR CONDITIONER
FNC	FENCE
EOW	EDGE OF WATER
U.E.	UNDERGROUND ELECTRIC
A.E.	ACCESS EASEMENT
–FO–	BURIED FIBER OPTIC CABLE
–T–	BURIED TELEPHONE CABLE
–W–	BURIED WATER LINE
–E–	BURIED ELECTRIC LINE
–G–	BURIED GAS LINE
–TV–	BURIED TELEVISION LINE
–FM–	BURIED FORCEMAIN
–OH–	AERIAL UTILITY LINE
–ST–	STORM WATER LINE
FP&L CO	FLORIDA POWER & LIGHT COMPANY
NGVD	NATIONAL GEODETIC VERTICAL DATUM
NAVD	NORTH AMERICAN VERTICAL DATUM
FDOT	FLORIDA DEPARTMENT OF TRANSPORTATION
USC&GS	UNITED STATES COAST & GEODETIC SURVEY
EP	EDGE OF PAVEMENT
FOC	FIBER OPTIC CABLE
BOW	BACK OF WALK
FOW	FRONT OF WALK
FRP	FIBER REINFORCED POLYMER
BC	BACK OF CURB
C&G	CURB & GUTTER
CSL	CONCRETE SLAB

NOTE:
THIS SURVEY IS NOT VALID WITHOUT SHEETS 1 TO 2

SURVEYOR'S REPORT:

PURPOSE OF SURVEY:

PREPARE TOPOGRAPHIC SURVEY TO MEET THE NEEDS OF THE CLIENTS DESIGN TEAM AND PERMITTING PURPOSES.

METHODOLOGY:

HORIZONTAL DATUM – NORTH AMERICAN 1983.
COORDINATES – STATE PLANE, FLORIDA EAST ZONE.

HORIZONTAL CONTROL POINTS FROM PREVIOUS SITE SURVEY BY SLIGER & ASSOCIATES, JOB No. 20–0379, DATED APR. 14, 2020 WERE RECOVERED AND USED FOR PRIMARY CONTROL, ON SITE SECONDARY CONTROL WAS ESTABLISHED. THEN, CONVENTIONAL TOTAL STATION SURVEYING TECHNIQUES USED FOR LOCATIONS.

VERTICAL DATUM – NGVD 1929 (PREVIOUS SURVEY SITE DATUM)
REFERENCE BENCHMARK, RECOVERED SAINT JOHNS RIVER WATER MANAGEMENT DISTRICT DISK DESIGNATED 00–08–087–0 IN CONCRETE PAD AROUND WELL No. V–1096 PUBLISHED ELEVATION 48.272 FEET.

ON SITE VERTICAL CONTROL WAS ESTABLISHED BY A 3 WIRE LEVEL LOOP THROUGH THE HORIZONTAL CONTROL ESTABLISHED HEREON.

ERROR OF CLOSURE

HORIZONTAL ERROR OF CLOSURE:
THE PREDICTED RELATIVE POSITIONAL ACCURACY FOR THE GLOBAL POSITIONING AND CONVENTIONAL TOTAL STATION EQUIPMENT USED TO PREFORM THIS SURVEY DOES NOT EXCEED 0.07 FEET PLUS 50 PARTS PER MILLION HORIZONTAL AND WAS VERIFIED BY REDUNDANT FIELD OBSERVATIONS.

ADJUSTMENT METHOD:
A STATISTICALLY SIGNIFICANT PORTION OF THE FIELD DATA WAS VERIFIED BY REDUNDANT GPS OBSERVATIONS AS MEETING THE ABOVE MENTIONED POSITIONAL TOLERANCE AND NOT ADJUSTED.

VERTICAL ERROR OF CLOSURE:
ON SITE VERTICAL CONTROL WAS ESTABLISHED BY A 3 WIRE LEVEL LOOP THROUGH THE HORIZONTAL CONTROL ESTABLISHED HEREON WITH AN ERROR OF CLOSURE OF 1:20,000.

REFERENCE MATERIAL:

NATIONAL GEODETIC DATABASE

THE CITY OF PORT ORANGE PUBLIC WORKS DEPARTMENT

F.E.M.A. ONLINE FLOOD MAP SERVICE CENTER

VOLUSIA COUNTY PROPERTY APPRAISER WEBSITE

SURVEY BY SLIGER & ASSOCIATES, INC. JOB No. 20–0379 DATED APR. 14, 2020

SAINT JOHNS RIVER WATER MANAGEMENT DISTRICT DATA BASE

ORIGINAL RECORDS BOOK 7670, PAGE 4748

SURVEY NOTES:

1. THE BEARINGS STRUCTURE AND COORDINATES SHOWN FOR THIS SURVEY ARE BASED ON (GRID BEARINGS) THE FLORIDA STATE PLANE COORDINATE SYSTEM, EAST ZONE, 1983 NORTH AMERICAN DATUM, 2007 ADJUSTMENT.
2. THIS PLAT OF SURVEY HAS BEEN PREPARED WITHOUT THE BENEFIT OF A CURRENT REPORT FROM AN AUTHORIZED TITLE PROFESSIONAL, OR A TITLE OPINION ISSUED BY AN ATTORNEY LICENSED BY THE FLORIDA BAR. THEREFORE, THERE MAY BE ADDITIONAL MATTERS OF RECORD NOT SHOWN ON THIS SURVEY.
3. UNDERGROUND FOUNDATIONS, IF ANY HAVE NOT BEEN LOCATED OR SHOWN AS A PART OF THIS SURVEY.
4. EVIDENCE OF ABOVE GROUND UTILITIES HAVE BEEN LOCATED AS A PART OF THIS SURVEY. NO UNDERGROUND UTILITIES HAVE BEEN LOCATED BY SLIGER AND ASSOCIATES, INC.
5. ELEVATIONS REFER TO N.G.V.D. OF 1929, PER S.J.R.W.M.D. BENCHMARK No. 00–08–087–0, HAVING A PUBLISHED ELEVATION OF 48.272 FEET.
6. THIS PROPERTY IS LOCATED IN FLOOD INSURANCE RATE MAP (F.I.R.M.) ZONE "X". THIS LOCATION IS DETERMINED BY SCALING FROM F.I.R.M. MAP NO. 12127C0525 H. MAP EFFECTIVE DATE: FEBRUARY 19, 2014. APPROXIMATE SCALE: 1"= 500'

INDEX OF SHEETS:

1 – COVER SHEET (CURRENT)

2 – TOPOGRAPHIC SURVEY

NOT A BOUNDARY SURVEY

NOTICE:
THIS SURVEY IS NOT VALID WITHOUT THE SIGNATURE AND THE ORIGINAL RAISED SEAL OR A VALID ELECTRONIC SIGNATURE OF A FLORIDA LICENSED SURVEYOR AND MAPPER.

SURVEYOR'S CERTIFICATION:

TO: HALL AND OGLE ARCHITECTS
THE CITY OF PORT ORANGE

I HEREBY CERTIFY THAT THIS SURVEY MEETS THE STANDARDS OF PRACTICE SET FORTH BY THE FLORIDA BOARD OF PROFESSIONAL SURVEYORS AND MAPPERS IN CHAPTER 5J–17, FLORIDA ADMINISTRATIVE CODE, PURSUANT TO SECTION 472.027, FLORIDA STATUTES.

JEFFREY S. HATTENDORF
PROFESSIONAL SURVEYOR AND MAPPER DATE:
FLORIDA LICENSE NUMBER 6193

SLIGER & ASSOCIATES, INC.
PROFESSIONAL LAND SURVEYORS
3921 NOVA ROAD
(386) 761–5385
PORT ORANGE, FL. 32127
LICENSED BUSINESS CERTIFICATION NUMBER 3019
www.sligerassociates.com

Copyright © 2023 Sliger & Associates, Inc.

No.	Date	Revision
1		
2		
3		
4		
5		

FIELD BOOK:1522
PAGE (S):01
FIELD DATE: 11/02/2023
PARTY CHIEF: K. HELMICK
DRAWN BY: D. GENTRY
CHECKED BY: J. HATTENDORF

TOPOGRAPHIC SURVEY
2401 BEAR TRAIL
PORT ORANGE, FLORIDA
CLIENT: HALL AND OGLE ARCHITECTS

PROJECT: 07529
JOB: 23–0984
SCALE: N/A
SHEET: 1 OF 2

FILE: K:\23\230984 2401 BEAR TR COPO RECLAIMED WATER\230984.DWG

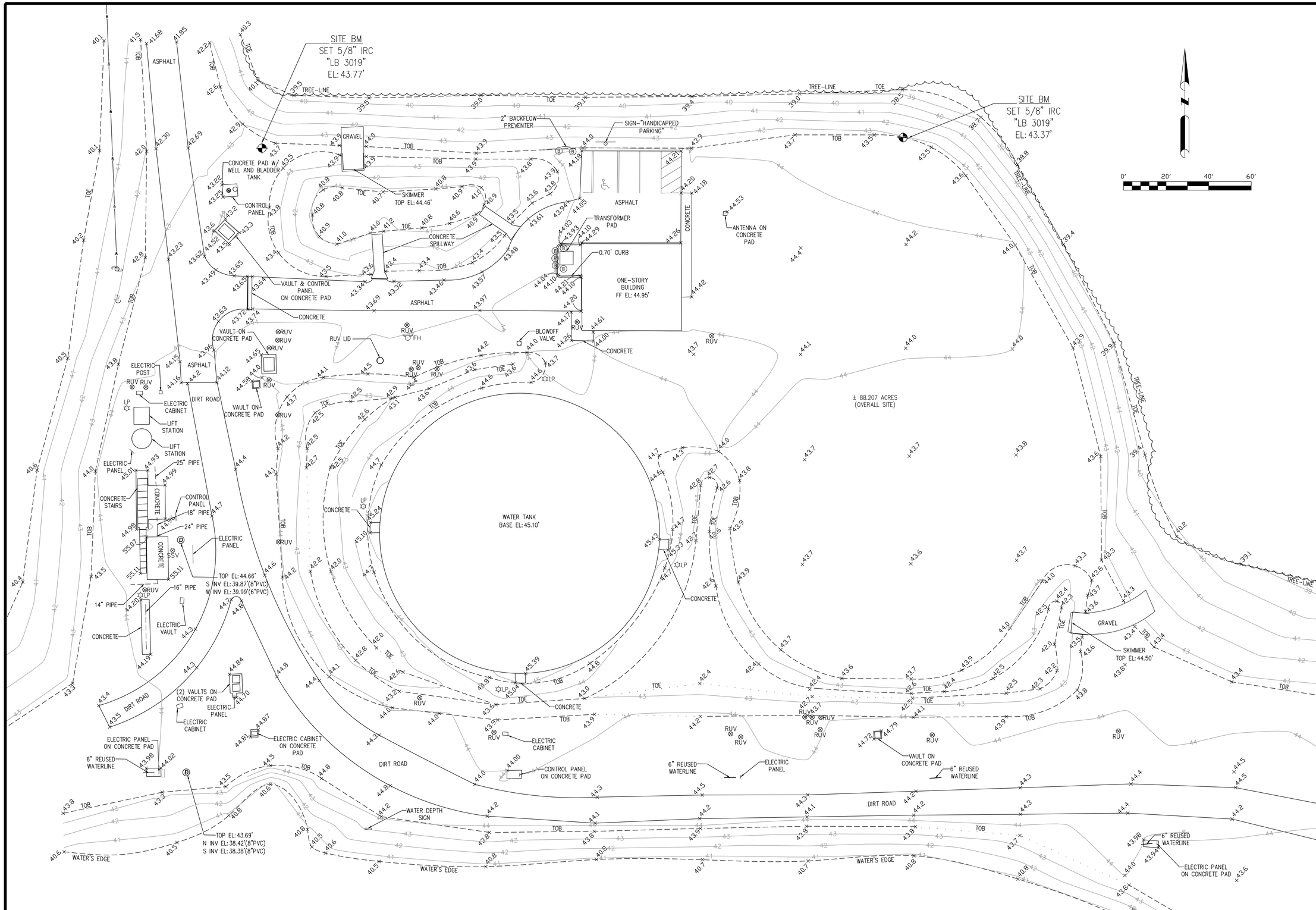

NOTE:
THIS SURVEY IS NOT VALID WITHOUT SHEETS 1 TO 2

SEE SHEET 1 OF 2 FOR:
LEGEND
ABBREVIATIONS
SURVEYORS NOTES
BOUNDARY DESCRIPTION

SLIGER & ASSOCIATES, INC.
PROFESSIONAL LAND SURVEYORS
3921 NOVA ROAD
(386) 761-5385
PORT ORANGE, FL 32127
LICENSED BUSINESS CERTIFICATION NUMBER 3019
www.sligerassociates.com
Copyright © 2023 Sliger & Associates, Inc.

No.	Date	Revision	Approved
5			
4			
3			
2			
1			

FIELD DATE: 11/02/2023
PARTY CHIEF: K. HELMICK
DRAWN BY: D. GENTRY
CHECKED BY: J. HATTENDORF
FIELD BOOK:1522
PAGE (S):01

TOPOGRAPHIC SURVEY
2401 BEAR TRAIL
PORT ORANGE, FLORIDA
CLIENT: HALL AND OGLE ARCHITECTS

PROJECT: 07529
JOB: 23-0984
SCALE: 1"= 20'
SHEET: 1 OF 2

FILE: K:\23\230984 2401 BEAR TR COPO RECLAIMED WATER\230984.DWG

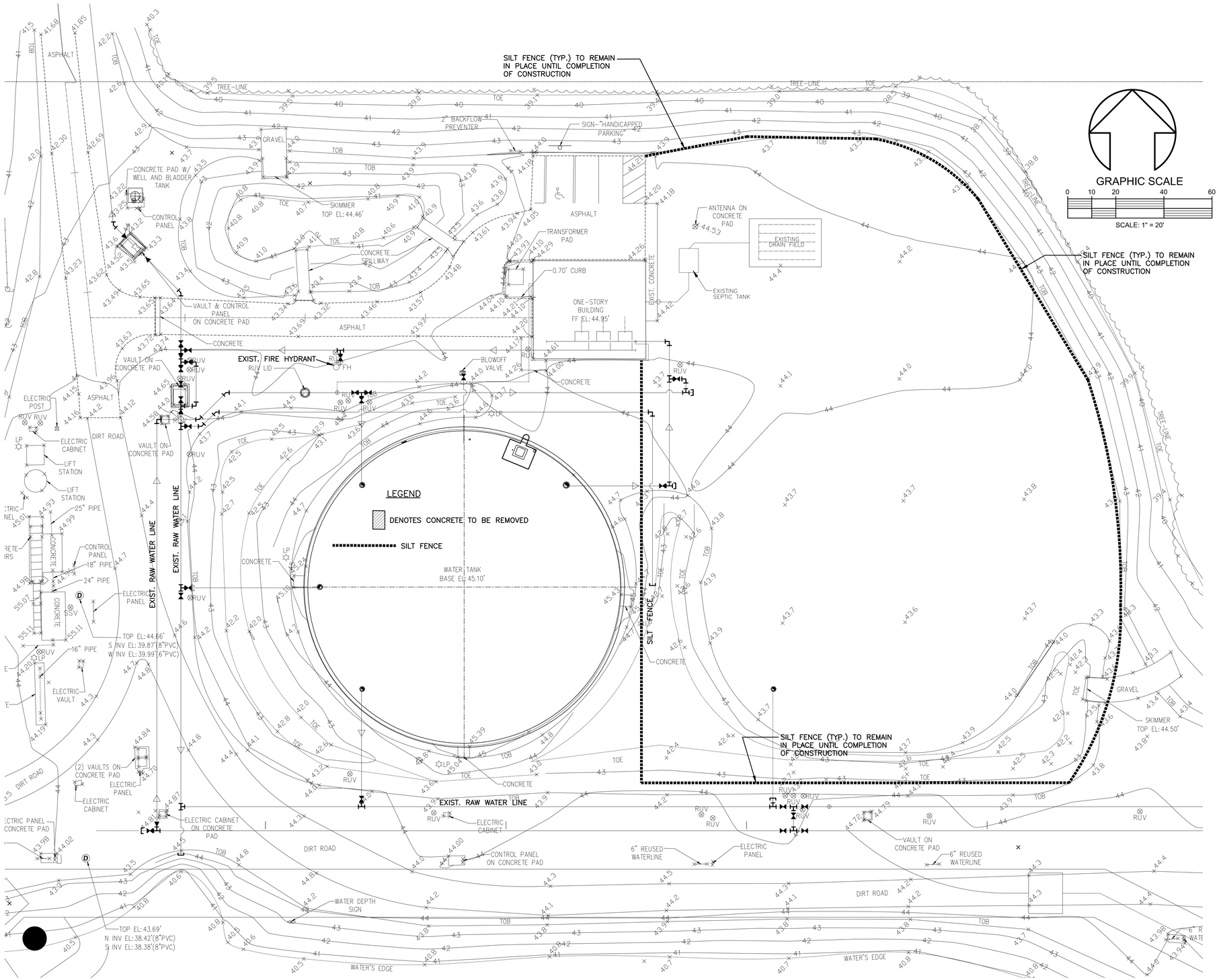

NO.	DATE	DESCRIPTION	BY
2	7/8/24	REVISED PER CITY COMMENTS	BVB
1	5/16/24	REVISED PER CITY COMMENTS	JD

REVISIONS

PARKER MYNCHENBERG & ASSOCIATES, INC.
PROFESSIONAL ENGINEERS * LANDSCAPE ARCHITECTS
1729 RIDGEWOOD AVENUE HOLLY HILL, FLORIDA 32117
(386) 677-6891 FAX (386) 677-2114 E-MAIL: info@parkermynchenberg.com
PARKER MYNCHENBERG P.E. #32645 R.L.A. #0001553,
STEVE BUSWELL P.E. #53965 R.L.A. #LA6667011
KEVIN A. LEE P.E. #71501
CERTIFICATE OF AUTHORIZATION NUMBER 00003910

CITY OF PORT ORANGE
FORESTRY DEPARTMENT BUILDING
PORT ORANGE * FLORIDA

DEMOLITION & EROSION CONTROL PLAN

2
SHEET NO.

File No.
Drawn By: BVB
Date: 10/25/2023
SCALE: 1" = 20'

SEAL

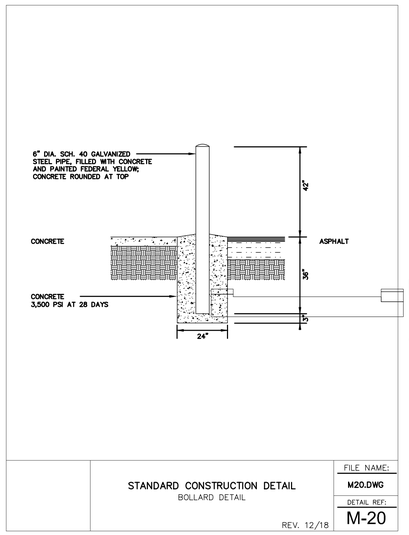

STANDARD CONSTRUCTION DETAIL
BOLLARD DETAIL

REV. 12/18

FILE NAME: M20.DWG
DETAIL REF: M-20

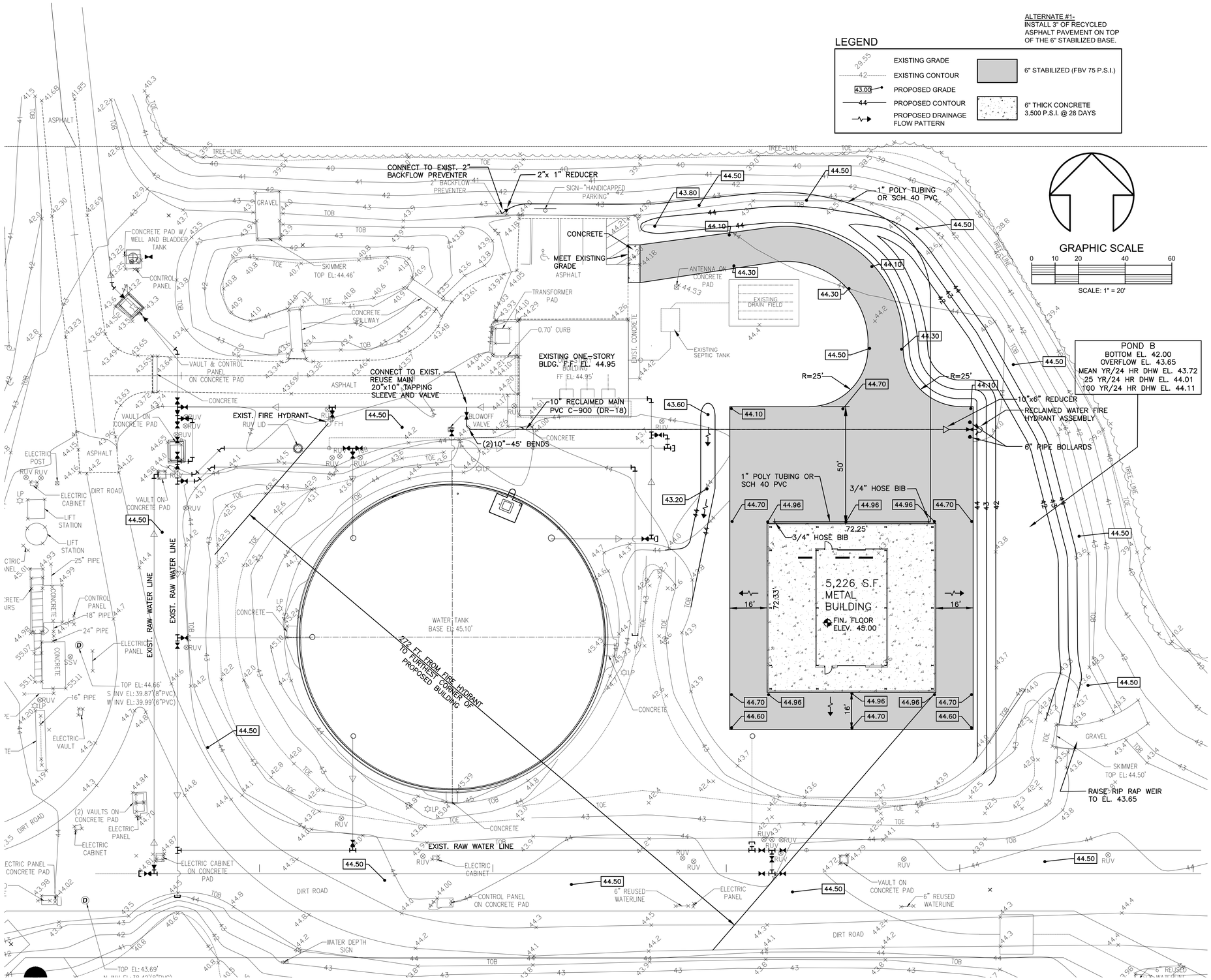

NO.	DATE	DESCRIPTION	BY
2	7/8/24	REVISED PER CITY COMMENTS	BVB
1	5/16/24	REVISED PER CITY COMMENTS	JD

REVISIONS

PARKER MYNCHENBERG & ASSOCIATES, INC.
PROFESSIONAL ENGINEERS * LANDSCAPE ARCHITECTS
1729 RIDGEWOOD AVENUE HOLLY HILL, FLORIDA 32117
(386) 677-6891 FAX (386) 677-2114 E-MAIL: info@parkermynchenberg.com
PARKER MYNCHENBERG P.E. #32645 R.L.A. #0001553,
STEVE BUSWELL P.E. #53965 R.L.A. #LA6667011
KEVIN A. LEE P.E. #71501
CERTIFICATE OF AUTHORIZATION NUMBER 00003910

CITY OF PORT ORANGE
FORESTRY DEPARTMENT BUILDING
PORT ORANGE * FLORIDA

CIVIL PLAN

3
SHEET NO.

File No.
Drawn By: BVB
Date: 10/25/2023
SCALE: 1" = 20'

SEAL

ALL MATERIALS AND INSTALLATION METHODS USED FOR LAND DEVELOPMENT CODE REQUIRED IMPROVEMENTS FOR SUBDIVISIONS AND SITE PLANS SHALL BE IN CONFORMANCE WITH THE CITY, FDOT STANDARD SPECIFICATIONS FOR ROAD AND BRIDGE CONSTRUCTION (LATEST EDITION) AND THE FDOT ROADWAY AND TRAFFIC DESIGN STANDARDS (LATEST EDITION).

1. ALL STORM SEWERS AND CULVERTS LOCATED IN ROADWAY RIGHTS-OF-WAY AND ROADWAY EASEMENTS SHALL BE:
   A. CLASS III (MIN.) REINFORCED CONCRETE PIPE (RCP), IN ACCORDANCE WITH ASTM C76, C655, C506 AND C507. ALL RCP JOINTS SHALL BE ENTIRELY WRAPPED WITH FILTER FABRIC WITH A MINIMUM WIDTH OF 24" AND A MINIMUM OF 24" OVERLAP SECURED WITH PLASTIC OR STAINLESS BANDS. GASKETS ALONE ARE NOT PERMITTED AS AN EQUIVALENT SUBSTITUTE FOR MEETING THIS REQUIREMENT. ALL JOINTS SHALL BE RUBBER GASKETED FOR BOTH ROUND AND ELLIPTICAL PIPE.
   B. CORRUGATED, SMOOTH INTERIOR WALL, HIGH DENSITY POLYETHYLENE (HDPE), UP TO 60" DIAMETER, IN ACCORDANCE WITH ASTM F2306. ALL JOINTS WILL BE IN ACCORDANCE WITH MANUFACTURER'S SPECIFICATIONS.
   C. CORRUGATED, SMOOTH INTERIOR WALL, POLYPROPYLENE (PP), UP TO 60" DIAMETER, IN ACCORDANCE WITH ASTM F2881 ALL JOINTS WILL BE IN ACCORDANCE WITH MANUFACTURER'S SPECIFICATIONS.
   D. CORRUGATED, SMOOTH INTERIOR WALL, PVC, UP TO 36" DIAMETER, IN ACCORDANCE WITH ASTM F949 ALL JOINTS WILL BE IN ACCORDANCE WITH MANUFACTURER'S SPECIFICATIONS.
2. STORM SEWERS AND CULVERTS LOCATED OUTSIDE OF ROADWAY RIGHTS-OF-WAY AND ROADWAY EASEMENTS MAY BE MADE OF ALTERNATE MATERIALS, INCLUDING SDR26 TO SDR35 PVC IN ACCORDANCE WITH ASTM D-3034.
3. DEPTH OF COVER MEASURED TO THE TOP OF PIPE (NOT INCLUDING THE BELL JOINT) SHALL BE A MINIMUM OF 12". DEVIATION FROM THIS REQUIREMENT MAY BE ALLOWED BY INCREASING THE PIPE'S STRUCTURAL CAPACITY. THIS DEVIATION MUST BE SPECIFIED ON THE PLANS APPROVED FOR CONSTRUCTION AND SUBSEQUENTLY REFLECTED ON THE SHOP DRAWINGS AND AS-BUILT PLANS.
4. ALL STORM DRAINAGE PIPES LOCATED IN ROADWAY RIGHTS-OF-WAY AND ROADWAY EASEMENTS SHALL BE A MINIMUM OF 15" DIAMETER OR EQUIVALENT AND BE DESIGNED FOR A MINIMUM OF A 25 YEAR – 24 HOUR STORM. STORM DRAINAGE PIPES SMALLER THAN 15" ARE PERMITTED ON PRIVATE SITE PLANS PROVIDED MAINTENANCE IS PERFORMED BY THE OWNER.
5. STORM INLETS, MANHOLES, AND CATCH BASINS SHALL BE EITHER POURED IN PLACE OR PRECAST REINFORCED CONCRETE. STRUCTURES SHALL BE REQUIRED AT EACH CHANGE OF PIPE SIZE OR CHANGE IN PIPE DIRECTION. ALL STRUCTURES SHALL BE IN COMPLIANCE WITH FDOT DRAINAGE INDEX 200. CAST IN PLACE STRUCTURES SHALL HAVE 8" THICK WALLS AND PRECAST STRUCTURES SHALL HAVE 6" THICK WALLS. THESE DIMENSIONS MUST BE REFLECTED ON BOTH SHOP AND AS-BUILT DRAWINGS.
6. CULVERTS SHALL BE SLOPED TO MAINTAIN A MINIMUM SELF-CLEANING VELOCITY OF 3' PER SECOND USING MANNING'S "N" CORRESPONDING TO THE PIPE MATERIAL.
7. FOR SITE PLANS, STORM INLET SPACING SHALL BE DESIGNED TO ACCEPT 100% OF THE RUNOFF FROM A RAINFALL INTENSITY OF 4" PER HOUR WITHOUT RESULTING IN PONDING OF WATER AROUND THE INLET.
8. FOR SUBDIVISION PLANS, STORM INLET SPACING, WITH PIPING 15" IN DIAMETER OR LARGER, SHALL BE DESIGNED WITH THE MAXIMUM DISTANCE OF 300' BETWEEN INLETS AND/OR CLEAN-OUT JUNCTION BOXES. FOR ROADWAY SECTIONS HAVING CURB AND GUTTER AND DESIGN SPEEDS OF 45 MPH AND LESS, SPREAD RESULTING FROM A RAINFALL INTENSITY OF 4" PER HOUR SHALL NOT EXCEED ONE-HALF OF THE TRAVEL LANE ADJACENT TO THE GUTTER.
9. RETENTION AREA WATER DEPTHS SHALL BE 4' MINIMUM TO 12' MAXIMUM, MEASURED FROM THE NORMAL WATER LEVEL.

STANDARD CONSTRUCTION DETAIL
STORM DRAINAGE DESIGN
AND CONSTRUCTION NOTES
REV. 12/18
FILE NAME: ST1.DWG
DETAIL REF: ST-1

10. THE MAXIMUM PERMISSIBLE SLOPE OF ANY NEW POND BANKS IS 4:1 (HORIZONTAL: VERTICAL). THIS LIMIT SHALL BE APPLIED TO ALL AREAS EXCEPT BELOW THE WATER TABLE WHERE SHARPER SLOPES ARE PERMISSIBLE.
11. PIPED STORMWATER SYSTEMS SHALL HAVE A MINIMUM DRAINAGE MAINTENANCE EASEMENT WIDTH OF 20', CENTERED OVER PIPE/STRUCTURE, AND SHALL BE INCREASED DEPENDING UPON CONDITIONS, SUCH AS OSHA UNSHIELDED TRENCH COMPLIANCE.
12. NORMAL ROADSIDE SWALES ARE PERMITTED TO BE CONSTRUCTED TO A MAXIMUM DEPTH OF 18" BELOW THE OUTSIDE EDGE OF PAVEMENT OR CONCRETE CURB.
13. CONCRETE EROSION CONTROL MUST BE PROVIDED WHERE SWALES OR CULVERTS INTERCEPT DRAINAGE DITCHES.
14. IN GENERAL, ALL RETENTION / DETENTION SITES MUST BE CONSTRUCTED ON ALL PROJECTS PRIOR TO ANY ROAD, PARKING LOT, OR BUILDING CONSTRUCTION COMMENCING OR AS CURRENT PERMIT CONDITIONS DICTATE. SEWER AND WATER MAINS MAY BE INSTALLED PRIOR TO RETENTION/DETENTION SITE ONSTRUCTION IF DEWATERING IS NOT REQUIRED.
15. POND INFLOW AND OUTLET STRUCTURES SHALL GENERALLY BE CONSTRUCTED WITH REINFORCED CONCRETE.
16. SKIMMERS FOR WET PONDS SHALL BE CONSTRUCTED SUCH THAT THE BOTTOM EXTENDS 6" BELOW THE NORMAL WATER LEVEL AND 6" ABOVE THE OVERFLOW. FOR DRY PONDS, THE SKIMMER BOTTOM SHALL BE SET 6" BELOW THE LOWEST OVERFLOW ELEVATION AND 6" ABOVE THE HIGHEST POINT OF OVERFLOW. ALL SKIMMERS SHALL BE CONSTRUCTED OF MINIMUM 1/4" THICK ALUMINUM OR FIBERGLASS AND ADEQUATELY SUPPORTED TO PREVENT DEFLECTION.
17. DEVELOPMENT PLANS FOR ALL STORMWATER MANAGEMENT SYSTEMS SHALL CONTAIN POP-OFF DATA (OVERFLOW), BOTTOM ELEVATION, NORMAL WATER LEVELS, MEAN ANNUAL SEASONAL HIGH WATER TABLE ELEVATION, TREATMENT VOLUME AND CORRESPONDING ELEVATION, 100 YEAR HIGH WATER LEVELS, AND THE DESIGN TAILWATER ELEVATION (IF APPLICABLE).
18. WHEN CULVERTS ARE INSTALLED TO MAINTAIN THE FLOW OF EXISTING DRAINAGE WAYS WHERE NEWLY PROPOSED ROADS WOULD OTHERWISE SEVER THE DRAINAGE WAY THEN CULVERTS CROSSING RIGHTS-OF-WAY SHALL EXTEND FROM RIGHT-OF-WAY LINE TO RIGHT-OF-WAY LINE UNDER THE ROADWAY. CULVERTS SHALL BE DESIGNED TO ACCOMMODATE THE FLOW FROM THE 100 YEAR-24 HOUR STORM EVENT WITHOUT FLOODING ADJACENT PROPERTY OR SURCHARGING THE SAID ROADWAY.
19. THE CITY MAY REQUEST THAT THE DEVELOPER SUBMIT A REPORT BY A QUALIFIED HYDROLOGIST ON THE IMPACT THE POND WILL HAVE ON NEIGHBORING WATER TABLE ELEVATIONS BOTH DURING CONSTRUCTION AND AFTER POND COMPLETION. THE CITY MAY REQUIRE GROUNDWATER MONITORING DURING THE POND EXCAVATION.
20. SOIL EROSION CONTROL MEASURES, SATISFACTORY TO THE ST. JOHNS RIVER WATER MANAGEMENT DISTRICT AND THE CITY, SHALL BE EMPLOYED DURING CONSTRUCTION.
21. A 10' MAINTENANCE EASEMENTS/RIGHTS-OF-WAY SHALL BE PROVIDED AROUND THE ENTIRE PERIMETER OF ALL PONDS AND ASSOCIATED OUTFALLS DISCHARGING INTO AND OUT OF LAKES. APPLICABLE CROSS SECTIONS SHALL BE INCLUDED ON FINAL DEVELOPMENT PLANS.
22. THE CONTRACTOR SHALL BE RESPONSIBLE TO OBTAIN ANY AND ALL DEWATERING PERMITS THAT MAY BE REQUIRED.
23. IT SHALL BE THE RESPONSIBILITY OF THE CONTRACTOR TO REVIEW AND MAINTAIN A COPY OF THE SJRWMD AND NPDES PERMITS AT THE CONSTRUCTION SITE AND ABIDE BY ALL CONDITIONS OF THE PERMIT.
24. LANDSCAPE PLANS SHALL CLEARLY DEPICT THE DESIGN LOCATION OF PLANTINGS RELATIVE TO THE LOCATION OF PUBLIC UTILITIES AND STORMWATER INFRASTRUCTURE IN ORDER TO EVALUATE POTENTIAL CONFLICTS.

STANDARD CONSTRUCTION DETAIL
STORM DRAINAGE DESIGN
AND CONSTRUCTION NOTES (CONT.)
REV. 12/18
FILE NAME: ST1.DWG
DETAIL REF: ST-1.1

25. NEW OR RELOCATED, UNDERGROUND MAINS SHALL BE LAID TO PROVIDE THE FOLLOWING MINIMUM CROSSING/VERTICAL SEPARATIONS (OUTSIDE TO OUTSIDE):

	WATER	STORM GRAVITY	STORM FORCE	RECLAIM	SANITARY GRAVITY	SANITARY FORCE
WATER		OVER STORM GRAVITY 6", PREFERRED 12"	OVER STORM FORCE 12"	OVER RECLAIM 12"	OVER SANITARY GRAVITY 6", PREFERRED 12"	OVER SANITARY FORCE 12"
		UNDER STORM GRAVITY 12"	UNDER STORM FORCE 12"	UNDER RECLAIM 12"	UNDER SANITARY GRAVITY 12"	UNDER SANITARY FORCE 12"
STORM GRAVITY	OVER WATER 12"		OVER STORM FORCE 6"	OVER RECLAIM 6", PREFERRED 12"	OVER SANITARY GRAVITY 6", PREFERRED 12"	OVER SANITARY FORCE 6", PREFERRED 12"
	UNDER WATER 6", PREFERRED 12"		UNDER STORM FORCE 6"	UNDER RECLAIM 12"	UNDER SANITARY GRAVITY 12"	UNDER SANITARY FORCE 12"
STORM FORCE	OVER WATER 12"	OVER STORM GRAVITY 6"		OVER RECLAIM 12"	OVER SANITARY GRAVITY 12"	OVER SANITARY FORCE 12"
	UNDER WATER 12"	UNDER STORM GRAVITY 6"		UNDER RECLAIM 12"	UNDER SANITARY GRAVITY 12"	UNDER SANITARY FORCE 12"
RECLAIM	OVER WATER 12"	OVER STORM GRAVITY 12"	OVER STORM FORCE 12"		OVER SANITARY GRAVITY 12"	OVER SANITARY FORCE 12"
	UNDER WATER 12"	UNDER STORM GRAVITY 6", PREFERRED 12"	UNDER STORM FORCE 12"		UNDER SANITARY GRAVITY 12"	UNDER SANITARY FORCE 12"
SANITARY GRAVITY	OVER WATER 12"	OVER STROM GRAVITY 12"	OVER STORM FORCE 12"	OVER RECLAIM 12"		OVER SANITARY FORCE 12"
	UNDER WATER 6", PREFERRED 12"	UNDER STORM GRAVITY 6", PREFERRED 12"	UNDER STORM FORCE 12"	UNDER RECLAIM 12"		UNDER SANITARY FORCE 12"
SANITARY FORCE	OVER WATER 12"	OVER STORM GRAVITY 12"	OVER STORM FORCE 12"	OVER RECLAIM 12"	OVER SANITARY GRAVITY 12"	
	UNDER WATER 12"	UNDER STORM GRAVITY 6", PREFERRED 12"	UNDER STORM FORCE 12"	UNDER RECLAIM 12"	UNDER SANITARY GRAVITY 12"	

STANDARD CONSTRUCTION DETAIL
STORM DRAINAGE DESIGN
AND CONSTRUCTION NOTES (CONT.)
REV. 12/18
FILE NAME: ST1.DWG
DETAIL REF: ST-1.2

26. NEW OR RELOCATED, UNDERGROUND MAINS SHALL BE LAID TO PROVIDE THE FOLLOWING MINIMUM HORIZONTAL SEPARATIONS (OUTSIDE TO OUTSIDE):

	WATER	STORM GRAVITY	STORM FORCE	RECLAIM	SANITARY GRAVITY	SANITARY FORCE
WATER		3'	3'	3'	6', PREFERRED 10'	6', PREFERRED 10'
STORM GRAVITY	3'		3'	3'	6', PREFERRED 10'	6', PREFERRED 10'
STORM FORCE	3'	3'		3'	6', PREFERRED 10'	6', PREFERRED 10'
RECLAIM	3'	3'	3'		6', PREFERRED 10'	6', PREFERRED 10'
SANITARY GRAVITY	6', PREFERRED 10'	6', PREFERRED 10'	6', PREFERRED 10'	6', PREFERRED 10'		6', PREFERRED 10'
SANITARY FORCE	6', PREFERRED 10'	6', PREFERRED 10'	6', PREFERRED 10'	6', PREFERRED 10'	6', PREFERRED 10'	

STANDARD CONSTRUCTION DETAIL
STORM DRAINAGE DESIGN
AND CONSTRUCTION NOTES (CONT.)
REV. 12/18
FILE NAME: ST1.DWG
DETAIL REF: ST-1.3

THE FOLLOWING MEASURES REPRESENT MINIMUM STANDARDS TO BE ADHERED TO BY THE CONTRACTOR THROUGHOUT THE CONSTRUCTION OF A PROJECT. THE CITY RESERVES THE RIGHT TO REQUIRE ADDITIONAL MEASURES TO BE EMPLOYED WHEN WARRANTED BY CONDITIONS AND/OR THE FAILURE OF THE CONTRACTOR TO EMPLOY APPROPRIATE EROSION CONTROL BEST MANAGEMENT PRACTICES. FAILURE TO COMPLY WITH THESE PROVISIONS SHALL RESULT IN THE ISSUANCE OF A "STOP WORK ORDER".

1. NO DISTURBANCE OF PROPOSED CONSERVATION EASEMENTS, NATURAL BUFFERS, OR WATER BODIES IS PERMITTED. THE CONTRACTOR SHALL LOCATE THESE AREAS ON SITE AND BARRICADE THEM TO AVOID ANY UNAUTHORIZED CLEARING. BARRICADES AND OTHER PROTECTIVE FENCING ARE TO BE LOCATED AT THE DRIP LINE OF EXISTING NATIVE TREES OR AT THE EDGE OF THE NATIVE UNDER-STORY HABITAT, WHICHEVER IS FURTHEST.

2. SPECIMEN AND HISTORIC TREES, CONSERVATION EASEMENTS, NATURAL VEGETATION BUFFERS, AND SIMILAR AREAS MUST BE PROTECTED BY BARRICADES OR FENCING PRIOR TO CLEARING. BARRICADES ARE TO BE SET AT THE DRIP LINE OF THE TREES, AS SPECIFIED, AND MAINTAINED THROUGHOUT THE DURATION OF THE PROJECT. BARBED WIRE IS NOT PERMITTED AS A PROTECTIVE BARRIER.

3. WHERE A CHANGE OF GRADE OCCURS WITHIN THE DRIP LINE OF A SPECIMEN TREE, SILT FENCES WILL BE REQUIRED DURING CONSTRUCTION AND RETAINING WALLS MUST BE INSTALLED PRIOR TO FINAL ACCEPTANCE BY THE CITY.

4. IT SHALL BE THE RESPONSIBILITY OF THE CONTRACTOR TO HAVE ALL PROTECTIVE VEGETATION BARRICADES AND EROSION CONTROL DEVICES AND MEASURES IN PLACE PRIOR TO THE COMMENCEMENT OF ANY EARTHWORK, INCLUDING PRELIMINARY GRUBBING. BEST MANAGEMENT PRACTICES (BMP'S) ARE TO BE IMPLEMENTED, SUCH AS TEMPORARY CONSTRUCTION FENCES, SILT FENCES AND FLOATING TURBIDITY BARRIERS. IT SHALL BE THE RESPONSIBILITY OF THE CONTRACTOR TO MAINTAIN ALL EROSION CONTROL DEVICES AND MEASURES THROUGHOUT THE DURATION OF THE ENTIRE PROJECT. MAINTENANCE SHALL INCLUDE, BUT NOT LIMITED TO, PERIODIC INSPECTION AND REMOVAL OF DEBRIS ABUTTING EROSION CONTROL DEVICES AS SPECIFICALLY IDENTIFIED IN LDC, CH 10, ARTICLE I, SEC. 5.

5. PRIOR TO THE INSTALLATION OF ANY FILL MATERIALS ON SUBJECT SITE, SILT FENCES SHALL BE INSTALLED (1) ALONG SUBJECT SITE BOUNDARY AND/OR PROPERTY LINES, (2) AT THE EDGE OF CONSERVATION EASEMENTS AND WETLANDS, (3) ADJACENT TO NATURAL LANDSCAPE BUFFERS, (4) AROUND THE PERIMETER OF EXISTING STORM WATER TREATMENT FACILITIES, AND (5) AT ANY ADDITIONAL AREAS THAT THE CITY DEEMS NECESSARY TO BE PROTECTED FROM POTENTIAL EROSION IMPACTS DURING CONSTRUCTION. THESE CONDITIONS SHALL APPLY IN ALL INSTANCES WHERE FILL MATERIAL IS BEING INSTALLED WITHIN 25 FEET OF ANY OF THE AFOREMENTIONED LOCATIONS. WHILE THESE ITEMS REPRESENT THE MINIMUM REQUIREMENTS, THE CITY RESERVES THE RIGHT TO IMPOSE ADDITIONAL PROTECTIVE MEASURES, AS DETERMINED DURING ACTUAL SITE VISITS CONDUCTED AS PART OF THE STANDARD REVIEW OF THE SITE-SPECIFIC ABC CLEARING PERMIT APPLICATION AND THROUGHOUT PROJECT CONSTRUCTION.

6. WHERE FILL MATERIAL IS INTENDED TO BE INSTALLED ADJACENT TO EXISTING VEGETATION WHICH IS INTENDED TO REMAIN NATURAL, THE CONTRACTOR MAY INSTALL SILT FENCING AS A TREE PROTECTION MEASURE, IN LIEU OF INSTALLING WOOD BRACING WITH ORANGE MESH. THIS PRACTICE IS ENCOURAGED BY THE CITY. IF THE SILT FENCE FAILS TO PROVIDE ADEQUATE PROTECTION FROM IMPACT DUE TO CONSTRUCTION, THEN BARRICADES OR WOOD BRACING SHALL BE REQUIRED.

7. AT A MINIMUM, THE CONTRACTOR SHALL SEED AND MULCH ALL DISTURBED AREAS. SUFFICIENT GRASS COVERAGE IS TO BE ESTABLISHED WITHIN TWO WEEKS.

8. IT SHALL BE THE RESPONSIBILITY OF THE CONTRACTOR THROUGH SCHEDULING, TO MINIMIZE THE DISTURBANCE OF SITE AREAS THAT HAVE BEEN BROUGHT TO THEIR PROPOSED FINAL GRADE. WITHIN SEVEN (7) DAYS OF BRINGING A SUBJECT AREA TO ITS FINAL GRADE OR INACTIVITY IN CONSTRUCTION, THE CONTRACTOR SHALL INSTALL SEED AND MULCH OR SOD, AS REQUIRED.

STANDARD CONSTRUCTION DETAIL
CONTRACTOR REQUIREMENTS FOR
SITE CLEARING, GRADING, AND EROSION CONTROL
DESIGN AND CONSTRUCTION
REV. 12/18
FILE NAME: M3.DWG
DETAIL REF: M-3

SCOPE OF WORK

FURNISH AND INSTALL SOD, OR SEED AND MULCH, THE LIMITS CALLED FOR ON THE CONSTRUCTION DRAWINGS. AT A MINIMUM, ALL WORK SHALL MEET THE MINIMUM STANDARDS OF SECTION 570 OF FDOT STANDARD SPECIFICATIONS FOR ROAD AND BRIDGE CONSTRUCTION, LATEST EDITION, AND MINIMUM REQUIREMENTS OF THE CITY, AS OUTLINED BELOW.

SEED

SEED SHALL BE PRE-MIXED BY A SEED COMPANY TO THE PERCENTAGES DESCRIBED BELOW, WITH CERTIFICATION FROM THE SUPPLIER PROVIDED TO THE CITY'S DESIGNATED LANDSCAPE INSPECTOR PRIOR TO USE. THE GRASS SEED MIXTURE SHALL BE:

PENSACOLA BAHIA (USE 50% SCARIFIED SEED)	50%
HULLED BERMUDA	25%
BROWN TOP MILLET	25%

NOTE: IN THE FALL AND WINTER MONTHS, AND WITH THE APPROVAL OF THE CITY, ANNUAL RYE GRASS SHALL BE SUBSTITUTED IN EQUAL AMOUNTS FOR THE BROWN TOP MILLET.

MULCH

STRAW OR HAY CONSISTING OF OATS, RYE, OR WHEAT STRAW, OR OF PANGOLA, PEANUT, COASTAL BERMUDA OR BAHIA GRASS HAY. MULCH SHALL BE FREE FROM WEED AND OTHER UNDESIRABLE GRASS. APPROXIMATELY ONE INCH (1"), LOOSE THICKNESS, OF MULCH MATERIAL SHALL BE APPLIED UNIFORMLY OVER THE SEEDED AREAS (APPROXIMATELY ONE AND ONE-HALF (1-1/2) BALES PER 1000 SQUARE FEET). THE MULCH MATERIAL SHALL BE CUT INTO THE SOIL WITH A DISC HARROW OR OTHERWISE ANCHORED DOWN. UNDER PROPER CIRCUMSTANCES, CONTRACTOR MAY REQUEST OPTION TO INSTALL HYDRO-SEEDING, SUBJECT TO THE APPROVAL OF THE PROJECT LANDSCAPE ARCHITECT AND THE CITY.

METHOD

GRASSING SHALL BE DONE IMMEDIATELY UPON COMPLETION OF THE FINE GRADING OPERATION. HOWEVER, NO SEEDING SHALL BE DONE WHEN THE GROUND IS FROZEN OR UNDULY WET. THE RATE OF SPREAD FOR THE SEED MATERIAL SHALL BE ONE HUNDRED AND THIRTY (130) POUNDS PER ACRE.

STANDARD CONSTRUCTION DETAIL
SODDING, SEEDING AND MULCHING
NOTES
REV. 12/18
FILE NAME: M4.DWG
DETAIL REF: M-4

IN ORDER TO ENSURE THAT NEW SUBDIVISIONS AND SITE PLANS ARE CONSTRUCTED SUBSTANTIALLY IN ACCORDANCE WITH CITY REGULATIONS AND THE APPROVED DRAWINGS, THE FOLLOWING INFORMATION IS REQUIRED ON ALL AS-BUILT DRAWINGS:

1. INDIVIDUAL PLAN AND PROFILE SHEETS FOR ALL ROADS AND SANITARY SEWER LINES, SHOWING MANHOLES, INLETS, AND PIPE CROSSINGS. PLAN AND PROFILE SHEETS SHALL SHOW SANITARY LINES AND ALL OTHER BURIED UTILITIES THAT CROSS SEWER LINES, AND ANY THAT ARE PARALLEL AND WITHIN TEN FEET OF SANITARY SEWER LINES. PLAN VIEWS SHALL BE DRAWN AT A SCALE OF ONE (1) INCH EQUAL TO FORTY (40) FEET HORIZONTAL. PROFILES SHALL BE DRAWN AT ONE (1) INCH EQUAL TO FOUR (4) FEET VERTICAL AND ALIGNED VERTICALLY WITH IMPROVEMENTS SHOWN ON THE PLAN VIEW.
2. DESIGN ELEMENTS SHALL BE CROSSED OUT AND AS-BUILT INFORMATION WRITTEN NEXT TO IT.
3. PAVEMENT AND CURB WIDTHS SHALL BE VERIFIED AND DIMENSIONED FOR EACH STREET AT EACH BLOCK FOR SUBDIVISIONS AND AS APPROPRIATE TO CONFIRM PAVING LIMITS FOR SITE PLANS.
4. ALL RADII AT INTERSECTIONS SHALL BE VERIFIED, DIMENSIONED AND CLEARLY INDICATED ON THE AS-BUILT.
5. ROADWAY ELEVATIONS AT CENTERLINE AND CURB INVERT SHALL BE RECORDED AT ALL GRADE CHANGES, 100' INTERVALS FOR LONG ROADWAYS, AND OTHER INTERVALS AS NEEDED. FOR SUBDIVISIONS, THE AS-BUILT CENTERLINE GRADE LINES OF ALL STREETS SHALL BE SHOWN ON THE PLAN AND PROFILE ALONG WITH THE DESIGN PROFILE GRADE LINES. IN THE EVENT THAT THE AS-BUILT CENTERLINE LONGITUDINAL GRADE DOES NOT MEET THE CITY MINIMUM STANDARDS, ADDITIONAL LONGITUDINAL GRADES OF THE ADJACENT CURBING AND SIMILAR ROADWAY CROSS-SECTIONS SHALL BE REQUIRED TO VERIFY THAT THE SYSTEM WILL FUNCTION AS ORIGINALLY DESIGNED.
6. FOR SUBDIVISIONS, PROPOSED DESIGN FINISHED FLOOR ELEVATIONS SHALL APPEAR ON ALL SUBDIVISION LOTS ON THE APPROPRIATE PLAN AND PROFILE SHEET AS WELL AS ON THE MASTER DRAINAGE PLAN.
7. STORM DRAINAGE STRUCTURES SHALL BE LOCATED AND DIMENSIONED FROM STREET/ROADWAY CENTERLINES OR LOT LINES AS APPROPRIATE. STORM DRAINAGE PIPE SHALL BE LOCATED AND DIMENSIONED FROM THE BACK OF CURB, OR EDGE OF PAVEMENT IF NO CURB IS PRESENT.
8. STORM DRAINAGE STRUCTURE RIMS, PIPE INVERT AND INLET BOTTOM ELEVATIONS SHALL BE RECORDED AND CLEARLY DENOTED AS AS-BUILT INFORMATION. STORM DRAINAGE PIPE MATERIAL, LENGTH, AND SIZE SHALL BE RECORDED AND CLEARLY INDICATED AS BEING AS-BUILT INFORMATION.
9. ALL APPLICABLE TOPOGRAPHIC INFORMATION PERTINENT TO THE ON-SITE DRAINAGE SYSTEM, SUCH AS DITCHES, SWALES, LAKES, CANALS, ETC. THAT ARE DEEMED NECESSARY BY THE CITY TO VERIFY THE FUNCTIONAL PERFORMANCE OF THE STORMWATER SYSTEM, SHALL BE NOTED. NORMALLY, RECORDING ELEVATIONS EVERY 100' AT THE TOP OF BANK AND TOE OF SLOPE WILL BE REQUIRED. MEASUREMENTS SHALL BE TAKEN AND RECORDED IN ORDER TO ACCURATELY TIE DOWN THESE FEATURES TO THE ROADWAY CENTERLINES AND TO PLAT LINES WHENEVER POSSIBLE, CONTOUR LINES SHALL BE UTILIZED TO GRAPHICALLY DESCRIBE THESE TOPOGRAPHIC FEATURES.
10. RETENTION AREAS SHALL HAVE THEIR TOP AND BOTTOM OF BANK ELEVATIONS RECORDED. ACTUAL DIMENSIONS OF THE SIZE OF ALL RETENTION AREAS ARE TO BE RECORDED AS MEASURED FROM TOP-OF-BANK TO TOP-OF-BANK WITH SIDE SLOPES INDICATED.
11. ACTUAL MATERIALS USED AND ELEVATIONS AND DIMENSIONS OF OVERFLOW WEIR STRUCTURES AND SKIMMERS SHALL BE NOTED ON THE AS-BUILT.
12. STORM DRAINAGE SWALE CENTERLINES SHALL BE LOCATED AND ELEVATIONS OF FLOW LINE AND TOPS OF BANKS SHALL BE RECORDED EVERY 100 FEET. SIDE SLOPES SHALL ALSO BE INDICATED.

STANDARD CONSTRUCTION DETAIL
REQUIREMENTS FOR AS-BUILTS DRAWINGS
REV. 12/18
FILE NAME: M5.DWG
DETAIL REF: M-5

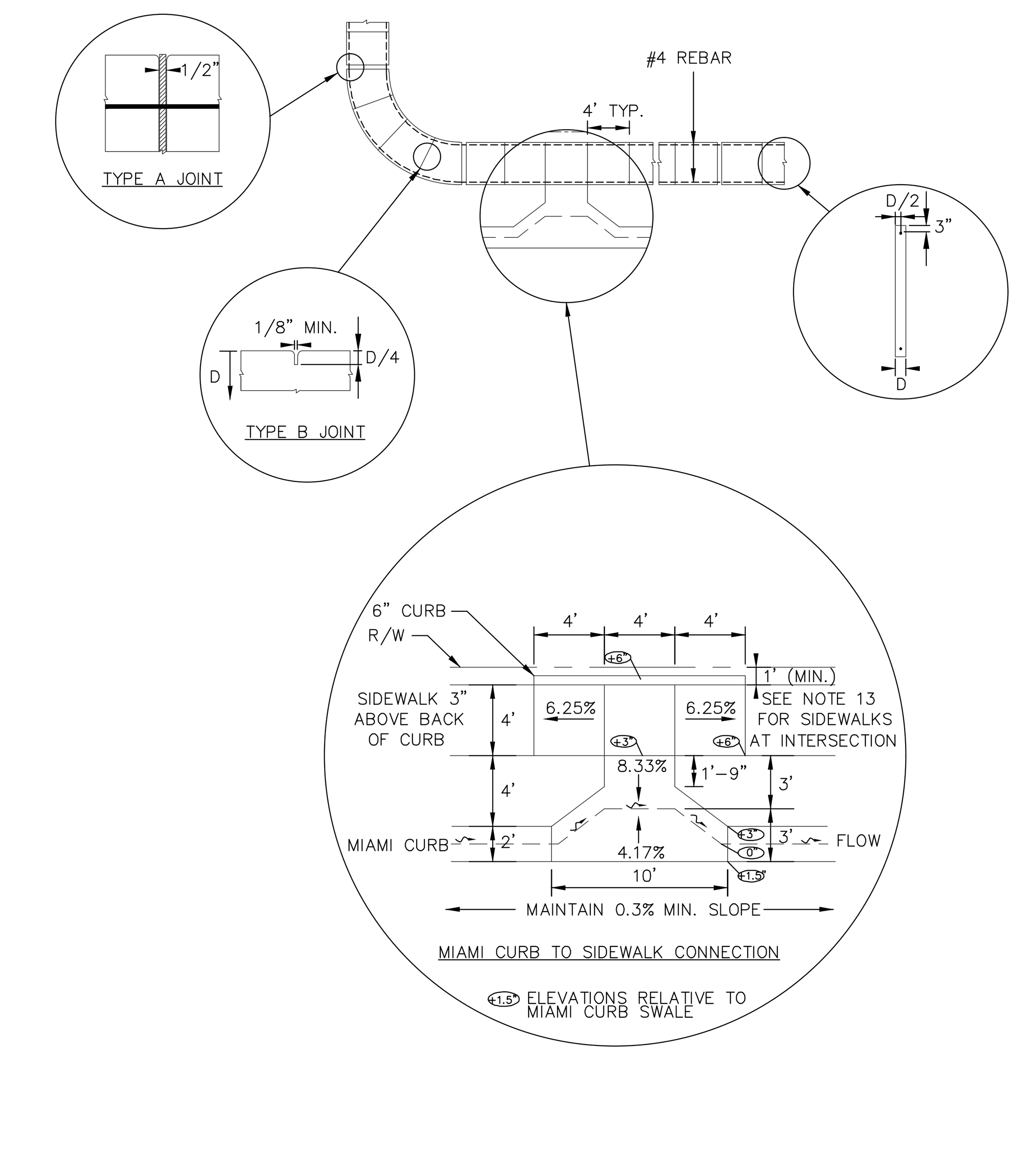

STANDARD CONSTRUCTION DETAIL
SIDEWALK CONSTRUCTION REQUIREMENTS
REV. 12/18
FILE NAME: M6.DWG
DETAIL REF: M-6

NO.	DATE	DESCRIPTION	BY
2	7/8/24	REVISED PER CITY COMMENTS	BVB
1	5/16/24	REVISED PER CITY COMMENTS	JD

REVISIONS

PARKER MYNCHENBERG & ASSOCIATES, INC.
PROFESSIONAL ENGINEERS * LANDSCAPE ARCHITECTS
1729 RIDGEWOOD AVENUE HOLLY HILL, FLORIDA 32117
(386) 677-6891 FAX (386) 677-2114 E-MAIL: info@parkermynchenberg.com
PARKER MYNCHENBERG P.E. #32645 R.L.A. #0001553,
STEVE BUSWELL P.E. #53985 R.L.A. #LA6667011
KEVIN A. LEE P.E. #71501
CERTIFICATE OF AUTHORIZATION NUMBER 00003910

CITY OF PORT ORANGE
FORESTRY DEPARTMENT BUILDING
PORT ORANGE * FLORIDA

PAVING & DRAINAGE DETAILS

4
SHEET NO.

File No.
Drawn By: BVB
Date: 10/25/2023
SCALE: NONE

SEAL

Z:\Port Orange Forestry Dept Building - 23---\DRAWINGS\0000DET.dwg, 7/8/2024 9:12:44 AM, PM, DWG To PDF.pc3, ARCH full bleed D (36.00 x 24.00 Inches), 1:1

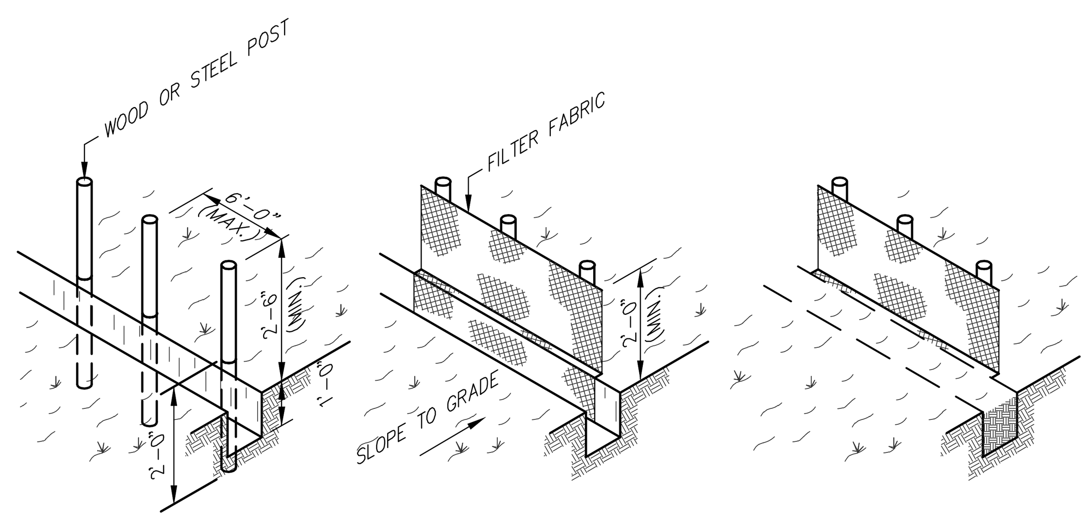

SET POST AND EXCAVATE A TRENCH MINIMUM 12" DEEP

ATTACH FILTER FABRIC TO POST ALLOWING 1 FT EXTENSION INTO THE TRENCH AS SHOWN

BACKFILL AND COMPACT EXCAVATED SOIL

SILT FENCE DETAIL

NOTES:

1. MATERIALS, CONSTRUCTION METHODS AND MAINTENANCE SHALL BE IN ACCORDANCE WITH THE STATE OF FLORIDA EROSION AND SEDIMENT CONTROL DESIGNER AND REVIEWER MANUAL (LATEST EDITION).
2. CONTRACTOR SHALL PROVIDE SILT FENCES OR HAVE BEST MANAGEMENT PRACTICES IMPLEMENTED AS REQUIRED AT ALL STORMWATER DISCHARGE POINTS FOR EROSION CONTROL AND SEDIMENT CONTROL DURING CONSTRUCTION.
3. CONTRACTOR SHALL ROUGH GRADE STORMWATER SWALES AND RETENTION AREAS PRIOR TO CONSTRUCTION OF SITE IMPROVEMENTS.
4. CONTRACTOR SHALL MEET ALL PERMIT CONDITIONS AS ESTABLISHED BY THE CITY OF PORT ORANGE AND ALL OTHER APPLICABLE AGENCIES, INCLUDING BUT NOT LIMITED TO COUNTY, FDOT, AND THE SJRWMD.
5. CONTRACTOR WILL BE ALLOWED TO USE A SMALL PIECE OF EQUIPMENT UP 6' WIDTH AND 1.5 TON WEIGHT, TO CLEAR A NARROW PATH TO INSTALL THE SILT FENCE.

STANDARD CONSTRUCTION DETAIL
SILT FENCE TURBIDITY BARRIER
FILE NAME: M23.DWG
DETAIL REF: M-23
REV. 12/18

ALL MATERIALS AND INSTALLATION METHODS USED FOR LAND DEVELOPMENT CODE REQUIRED IMPROVEMENTS FOR SUBDIVISIONS AND SITE PLANS SHALL BE IN CONFORMANCE WITH THE CITY, FDOT STANDARD SPECIFICATIONS FOR ROAD AND BRIDGE CONSTRUCTION (LATEST EDITION), AND THE FDOT ROADWAY AND TRAFFIC DESIGN STANDARDS (LATEST EDITION).

1. ALL RIGHT-OF-WAY OTHER THAN ROADWAY AREAS SHALL BE SEEDED AND MULCHED OR SODDED. ALL SLOPES STEEPER THAN 6:1 SHALL REQUIRE SODDING. THE CITY RESERVES THE RIGHT TO REQUIRE SODDING IN SPECIAL AREAS WHERE EROSION IS A CONCERN.
2. THE FOLLOWING WILL BE THE STANDARD PROTECTION FOR DITCHES UNLESS DRAINAGE CALCULATIONS INDICATE OTHERWISE:

SWALE PROFILE GRADES	PROTECTION REQUIRED
0.2% – 1.0%	SEEDING AND MULCHING
1.0% – 4.0%	SODDING
4.0% +	DITCH PAVING

3. THE PAVEMENT, BASE, AND SUBGRADE THICKNESS PRESENTED ON DETAILS REPRESENTS THE MINIMUM REQUIREMENTS FOR LOCAL PUBLIC STREETS AND PRIVATE PARKING LOTS. AREAS SUBJECT TO HEAVY TRAFFIC, SUCH AS COLLECTOR ROADS AND COMMERCIAL PRIVATE PARKING LOTS, HAVE INCREASED REQUIREMENTS.
4. THE DEVELOPER SHALL PROVIDE, AT THEIR OWN EXPENSE, A CERTIFIED SOILS ENGINEERING LABORATORY TO PERFORM ALL FIELD AND LABORATORY TESTING REQUIRED TO VERIFY THAT THE CONSTRUCTION IS IN COMPLIANCE WITH THE CITY'S MINIMUM STANDARDS. IT IS THE RESPONSIBILITY OF THE DEVELOPER TO ENSURE THAT COPIES OF ALL TEST REPORTS ARE PROVIDED TO THE CITY'S DESIGNATED SITE INSPECTOR PRIOR TO THE PROJECT FINAL INSPECTION IN ORDER TO ALLOW PROJECT ACCEPTANCE BY THE CITY.
5. THE LIMITS OF STABILIZED SUBGRADE SHALL EXTEND TO A DEPTH OF 12" BELOW THE BOTTOM OF THE BASE AND OUTWARD TO 12" BEYOND THE CURB.
6. THE STABILIZING MATERIAL, IF REQUIRED, SHOULD BE A HIGH BEARING VALUE SOIL, SAND-CLAY, LIMEROCK, RECYCLED CONCRETE, SHELL, OR OTHER MATERIAL AS APPROVED BY THE CITY DESIGNATED SITE INSPECTOR AND A LICENSED SOILS ENGINEER.
7. ROADWAY SUBGRADES SHALL BE STABILIZED TO NO LESS THAN LBR 40 TO A 12" DEPTH AND COMPACTED TO NO LESS THAN 98% DENSITY BASED ON MODIFIED PROCTOR MAXIMUM DRY TEST PER AASHTO T-180. TESTS FOR SUBGRADE BEARING CAPACITY AND COMPACTION SHALL BE DONE AT A MINIMUM OF EVERY 300 FEET AND STAGGERED TO THE LEFT, RIGHT, AND AT CENTER LINE OF THE ROADWAY.
8. SITE PLAN SUBGRADES SHALL BE STABILIZED TO NO LESS THAN LBR 40 TO A 12" DEPTH AND COMPACTED TO NO LESS THAN 98% DENSITY BASED ON MODIFIED PROCTOR MAXIMUM DRY TEST PER AASHTO T-180. TESTS FOR SUBGRADE BEARING CAPACITY AND COMPACTION SHALL BE DONE FOR EVERY 600 SQUARE FEET OF STABILIZED AREA, OR PORTIONS THEREOF.
9. BASES FOR ALL STREETS SHALL HAVE A MINIMUM 6" DEPTH. FLOWABLE FILL (FDOT SPECIFICATIONS SECTION 121) BASES SHALL HAVE A MINIMUM STRENGTH OF 350 POUNDS PER SQUARE INCH AT 7 DAYS COMPACTED TO 98% DENSITY PER AASHTO T-180 MODIFIED PROCTOR TEST IN CONFORMANCE WITH SECTION 270 OF STANDARD FDOT SPECIFICATIONS FOR ROAD AND BRIDGE CONSTRUCTION (LATEST EDITION). RECYCLED CONCRETE OR LIMEROCK BASES SHALL BE COMPACTED TO 98% MAXIMUM DENSITY BASED ON AASHTO T-180 MODIFIED PROCTOR TEST.

STANDARD CONSTRUCTION DETAIL
ROADWAY AND PARKING AREA DESIGN AND CONSTRUCTION NOTES
FILE NAME: R1.DWG
DETAIL REF: R-1
REV. 12/18

10. FLOWABLE FILL AND RECYCLED CONCRETE MIX DESIGNS SHALL BE SUBMITTED BY A LICENSED SOILS ENGINEER TO THE CITY'S ENGINEERING DEPARTMENT PRIOR TO THE START OF SUBGRADE PREPARATION. ALL MIX DESIGNS SHALL BE SUBJECT TO THE APPROVAL OF THE CITY.
11. CONCRETE DELIVERY TICKETS SHALL BE PROVIDED TO THE CITY'S DESIGNATED SITE INSPECTOR AT THE TIME OF PLACEMENT. IF THE INSPECTOR IS NOT ON SITE THROUGHOUT THE ENTIRE INSTALLATION, ACCUMULATED DELIVERY TICKETS CAN BE PROVIDED TO THE INSPECTOR BY THE CONTRACTOR ON THE FOLLOWING DAY.
12. TESTING OF THE IN-PLACE BASE SHALL BE DONE AT INTERVALS EQUIVALENT TO SUBGRADE TESTING AND SHALL CONSIST OF, AT A MINIMUM, ONE MOISTURE CONTENT AND ONE COMPACTION TEST.
13. PORTLAND CEMENT CONCRETE, LIMEROCK, RECYCLED CONCRETE, OR FULL DEPTH ASPHALT PAVEMENT MAY USED IN PLACE OF FLOWABLE FILL BASE. ALL ROADWAY DESIGNS SHALL BE SUBJECT TO APPROVAL BY THE CITY.
14. BASE COURSES SHALL HAVE LIQUID ASPHALT PRIME COAT APPLIED AT THE APPROPRIATE RATE SPECIFIED IN FDOT STANDARD SPECIFICATION 300.7 (LATEST EDITION) IF ASPHALT WILL NOT BE INSTALLED WITHIN 24 HOURS OR IF BASE COURSE IS OPEN TO ANY TRAFFIC.
15. FLOWABLE FILL BASE MATERIAL CONSTRUCTION SHALL BE CONTINUOUSLY SUPERVISED BY A SOILS TESTING LABORATORY AT THE DEVELOPER'S EXPENSE. THE TESTING LABORATORY SHALL PROVIDE AN ON-SITE TECHNICIAN EXPERIENCED IN SOIL CEMENT BLENDING.
16. FLOWABLE FILL BASE COURSES SHALL BE ALLOWED TO CURE A MINIMUM OF SEVEN (7) DAYS UNDER NO TRAFFIC PRIOR TO PLACING ANY ASPHALT SURFACE. TEST REPORTS ARE REQUIRED TO BE DELIVERED TO THE CITY'S DESIGNATED SITE INSPECTOR PRIOR TO TRAFFIC USAGE.
17. RECYCLED CONCRETE CAN BE USED AS A BASE MATERIAL PROVIDED THE MATERIAL IS A MINIMUM OF 60% CARBONATE OF CALCIUM AND MAGNESIUM. THE MATERIAL SHALL BE LIMITED TO MAXIMUM 3% OF WATER SENSITIVE CLAY MATERIAL. LIQUID LIMIT SHALL NOT EXCEED 35 AND BE NON-PLASTIC AND THE PLASTICITY INDEX SHALL NOT EXCEED 10. THE MATERIAL SHALL NOT CONTAIN ORGANIC MATERIAL, CHERTY OR OTHER EXTREMELY HARD PIECES, LUMPS, BALLS OR POCKETS OF SAND SIZE MATERIAL OF A QUANTITY AS TO BE DETRIMENTAL TO THE PROPER BONDING, FINISHING OR STRENGTH OF OF THE RECYCLED CONCRETE BASE. FOR BASE APPLICATIONS, AT LEAST 97% (BY WEIGHT) OF THE MATERIAL SHALL PASS A 1" SIEVE AND FOR SUBBASE APPLICATIONS, AT LEAST 97% (BY WEIGHT) OF THE MATERIAL SHALL PASS A 1-1/2" SIEVE. FOR BOTH APPLICATIONS, THE MATERIAL SHALL BE WELL GRADED DOWN TO DUST AND HAVE A MINIMUM 130 LBR VALUE. COARSE AGGREGATE USED IN THE RECYCLED CONCRETE SHALL HAVE A MAXIMUM LOSS OF 45% PER LOS ANGELES ABRASION TEST. ALL MATERIALS SHALL BE WELL GRADED IN ACCORDANCE WITH REQUIREMENTS SET FORTH IN SECTION 204, FDOT STANDARD SPECIFICATIONS FOR ROAD AND BRIDGE CONSTRUCTION (LATEST EDITION).
18. RECYCLED CONCRETE OR LIMEROCK FOR BASE OR SUBGRADE APPLICATIONS SHALL BE ALLOWED ON CITY ROADWAYS ONLY WHERE THE LOWEST ELEVATION OF THE ROADWAY SUBGRADE IS A MINIMUM OF 6" ABOVE THE SEASONAL HIGH GROUNDWATER TABLE AS CERTIFIED BY A FLORIDA LICENSED PROFESSIONAL SOILS ENGINEER AND SUBSEQUENTLY APPROVED BY THE CITY. IN AREAS NOT MEETING THESE STANDARDS, A FLOWABLE FILL BASE OR FULL DEPTH ASPHALTIC BASE WILL BE REQUIRED. ALL CRUSHING OF RECYCLED CONCRETE SHALL BE DONE PRIOR TO THE MATERIAL BEING PLACED UPON THE SITE. TESTING OF SOIL CEMENT BASE SHALL HAVE THE SAME REQUIREMENTS AND BE PERFORMED AT THE SAME LOCATION AND INTERVALS AS REQUIRED FOR LIMEROCK.

STANDARD CONSTRUCTION DETAIL
ROADWAY AND PARKING AREA DESIGN AND CONSTRUCTION NOTES (CONTINUED)
FILE NAME: R1.DWG
DETAIL REF: R-1.1
REV. 12/18

MATERIALS

THE INSPECTION AND TESTING OF MATERIALS AND FINISHED ARTICLES TO BE INCORPORATED IN THE WORK SHALL BE MADE BY BUREAUS, LABORATORIES, OR AGENCIES APPROVED BY THE ENGINEER OF RECORD. THE CONTRACTOR SHALL SUBMIT SUCH SAMPLES, OR SUCH SPECIAL OR TEST PIECES OF MATERIALS AS THE ENGINEER OF RECORD MAY REQUIRE. THE CONTRACTOR SHALL NOT INCORPORATE ANY MATERIAL OR FINISHED ARTICLE INTO THE WORK UNTIL THE RESULTS OF THE INSPECTION OR TESTS ARE KNOWN AND THE CONTRACTOR HAS BEEN NOTIFIED BY THE ENGINEER OF RECORD THAT THE MATERIAL OR FINISHED ARTICLE IS ACCEPTED. ALL MATERIALS MUST BE OF THE SPECIFIED QUALITY AND BE EQUAL TO THE APPROVED SAMPLE IF A SAMPLE HAS BEEN SUBMITTED. CERTIFIED COPIES OF ALL TESTS MADE SHALL BE SUBMITTED TO THE ENGINEER OF RECORD AS WELL AS TO THE CITY'S DESIGNATED SITE INSPECTOR. THE CITY'S DESIGNATED SITE INSPECTOR MUST RECEIVE COPIES OF ALL TESTING REPORTS AND CERTIFICATES PRIOR TO THE ENGINEER OF RECORD REQUESTING A FINAL PROJECT INSPECTION FROM THE CITY.

LABORATORY CONTROL AND CERTIFICATES

1. SPECIFICATIONS: SAMPLING, TESTING, AND LABORATORY METHODS SHALL BE IN ACCORDANCE WITH THE STANDARD SPECIFICATIONS OF THE AASHTO OR ASTM. WHERE AASHTO OR ASTM SPECIFICATIONS ARE USED, THE REFERENCE SHALL BE CONSTRUED TO BE THE MOST RECENT STANDARD SPECIFICATIONS OF THE AASHTO OR ASTM IN FORCE ON THE DATE OF THE TEST.
2. TEST & CERTIFICATES: THE CONTRACTOR SHALL ENGAGE AN APPROVED TESTING LABORATORY TO PROVIDE THE FOLLOWING TESTS AND CERTIFICATIONS SIGNED BY A REGISTERED ENGINEER OF THE STATE OF FLORIDA. ALL TECHNICIANS PERFORMING THE TESTS SHALL BE STATE CERTIFIED FOR THE TESTING PERFORMED. ADDITIONAL TESTS THAT MAY BE REQUIRED BY EITHER THE ENGINEER OF RECORD OR THE CITY SHALL ALSO BE PROVIDED BY THE CONTRACTOR AND THE FOLLOWING SHALL NOT BE TAKEN AS A COMPLETE AND EXHAUSTIVE LIST OF THE CONTRACTOR'S TESTING RESPONSIBILITIES.
   A) SOIL ANALYSIS FOR STRUCTURAL FILL MATERIAL PRIOR TO INSTALLATION.
   B) PROCTOR DENSITIES, MOISTURE CONTENT, COMPACTED FIELD DENSITIES, AND ATTERBERG LIMITS.
   C) FLOWABLE FILL – MIX DESIGNS, CONSTRUCTION SUPERVISION AND COMPRESSIVE STRENGTH TESTS.
   D) ANALYSIS OF RECYCLED CONCRETE BASE MATERIAL PRIOR TO INSTALLATION.
   E) ASPHALT MIX DESIGN, BITUMEN CONTENT, SIEVE ANALYSIS, HUBBARD FIELD STABILITY TESTS, NUCLEAR DENSITY TESTS (BACKSCATTER METHOD), AND ANALYSIS OF CORE SAMPLES.
   F) CONCRETE MIX DESIGNS FOR ALL APPLICATIONS INCLUDING PAVEMENT, CAST-IN-PLACE STRUCTURES, CURBING, GUTTERS, SIDEWALKS, BIKE PATHS, APRONS AND DRIVEWAYS.
   G) COMPRESSIVE TEST CYLINDERS AND SLUMP TESTS FOR ALL APPLICATIONS OF CONCRETE, INCLUDING PAVEMENT, CAST-IN-PLACE STRUCTURES, CURBING, GUTTERS, SIDEWALKS, BIKE PATHS, APRONS, AND DRIVEWAYS.
   H) CHLORINE RESIDUAL AND BACTERIOLOGICAL TESTING OF WATER MAINS.
   I) PRESSURIZED LEAK TESTING OF WATER MAINS, FORCE MAINS, AND RECLAIMED WATER MAINS.

STANDARD CONSTRUCTION DETAIL
TECHNICAL SPECIFICATIONS FOR SITES AND SUBDIVISIONS TESTING
FILE NAME: M2.DWG
DETAIL REF: M-2
REV. 12/18

19. DESIGN MIXES AND PRODUCT GRADATION INFORMATION FOR ALL MATERIALS TO BE INSTALLED AS PART OF THE LAND DEVELOPMENT CODE REQUIRED IMPROVEMENTS SHALL BE SUBMITTED TO THE CITY'S ENGINEER FOR ACCEPTANCE BY THE CITY. THE INFORMATION SHALL BE SUBMITTED NO LESS THAN THREE (3) WORKING DAYS PRIOR TO ANY CONSTRUCTION. SUBMITTALS SHALL INCLUDE, BUT NOT BE LIMITED TO, INFORMATION TO EVALUATE THE MATERIALS PROPOSED FOR INSTALLATION AS SUBGRADE, BASE, AND PAVEMENT FOR ALL ROADWAY AND PARKING AREA SURFACES.
20. ASPHALT BINDER FOR WEARING COURSE HOT MIX AGGREGATES MAY BE VIRGIN MATERIAL OR UP TO 20% RECLAIMED ASPHALT PAVEMENT (RAP) IN ACCORDANCE WITH FDOT SPECIFICATIONS 334 (LATEST EDITION).
21. PRIOR TO PLACEMENT, FDOT CERTIFIED ASPHALT PLANTS MUST CERTIFY TO THE CITY'S PROJECT INSPECTOR THAT THE ASPHALT DELIVERED TO THE SITE IS IN ACCORDANCE WITH THE APPROVED PLANS AND SPECIFICATIONS.
22. EXTRACTION AND GRADATION TESTS ON ASPHALT MIXES SHALL BE PROVIDED TO THE CITY'S DESIGNATED SITE INSPECTOR FOR EVERY 2500 SQUARE YARDS OF ASPHALT, OR PART THEREOF, TO ENSURE THAT DESIGN MIXES MEET THE CITY STANDARD SPECIFICATIONS.
23. FIELD TESTING OF THE ASPHALT PAVEMENT SHALL BE DONE AT INTERVALS EQUIVALENT TO SUBGRADE TESTING AND SHALL CONSIST OF, AS A MINIMUM, A COMPACTION TEST. ASPHALT PAVEMENT SHALL BE COMPACTED TO 98% DENSITY PER FM 1-T238 (METHOD B), NUCLEAR DENSITY TEST, "BACKSCATTER METHOD" AND/OR MINIMUM 90% MAXIMUM VOIDLESS SPECIFIC GRAVITY.
24. IN ADDITION TO THE FIELD DENSITY TESTS NOTED, THE CITY RESERVES THE RIGHT TO REQUIRE CORE SAMPLES OF PAVEMENT SECTIONS EXTRACTED AND TESTED BY A CERTIFIED SOILS ENGINEERING LABORATORY AT THE DEVELOPER'S EXPENSE. THE CITY'S DESIGNATED SITE INSPECTOR SHALL DESIGNATE THE LOCATIONS OF THE TEST CORE LOCATIONS.
25. THE ROADWAY CROWN SHALL HAVE A STANDARD ONE QUARTER INCH (1/4") PER FOOT SLOPE.
26. ALL ROADWAYS WITH CURB AND GUTTER SECTIONS SHALL HAVE AS A STANDARD A MINIMUM LONGITUDINAL SLOPE OF 0.30%. THE ROADWAY CENTERLINE SHALL BE CLEARLY MARKED ON THE DESIGN PLANS. AT A MINIMUM, DESIGN ROADWAY CENTERLINE ELEVATIONS SHALL BE NOTED AT ALL GRADE CHANGES AND AT 100' INTERVALS ALONG THE ROADWAY PROFILE ON BOTH THE DESIGN PLANS AND AS-BUILT DRAWINGS.
27. THE FINISHED PAVEMENT EDGE SHALL BE ONE QUARTER INCH (1/4") ABOVE THE ADJACENT CONCRETE GUTTER FOR GUTTERS COLLECTING AND CONVEYING STORMWATER.
28. CONCRETE CURBS SHALL BE PROVIDED ON BOTH SIDES OF ALL STREETS AND ALL CONCRETE CURBS SHALL BE CONSTRUCTED WITH MINIMUM 3,000 PSI CONCRETE AT 28 DAYS.
29. CONCRETE CURBING, SIDEWALKS, PAVEMENT AND SIMILAR CONCRETE AREAS SHALL BE SAW CUT WITHIN 4 TO 18 HOURS OF PLACEMENT. SAW CUTS SHALL BE 1/4" IN WIDTH TO A DEPTH OF 1/4 OF THE TOTAL DEPTH OF CONCRETE OR 1-1/2", WHICHEVER IS LESS. SAW CUTS SHALL BE LOCATED AT INTERVALS OF TEN FEET (10') WITH EXPANSION JOINTS AT STREET INTERSECTIONS, RADIUS POINTS, STRUCTURES, AND ALONG CURVES AT SIXTY FEET (60') INTERVALS. ALL EXPANSION JOINT MATERIAL IS REQUIRED TO BE INSTALLED THROUGH THE ENTIRE DEPTH OF THE CONCRETE CURB. FOR LINEAL SECTIONS OF CURBS, EXPANSION JOINTS SHALL BE LOCATED AT A MAXIMUM SPACING OF FIVE-HUNDRED FEET (500') AND SHALL BE 1/2" IN WIDTH.

STANDARD CONSTRUCTION DETAIL
ROADWAY AND PARKING AREA DESIGN AND CONSTRUCTION NOTES (CONTINUED)
FILE NAME: R1.DWG
DETAIL REF: R-1.2
REV. 12/18

29. THE FOLLOWING SYMBOLS SHALL BE CUT IN THE CURB TO MARK LOCATION OF SERVICES:

SYMBOL	SERVICE
"V"	SEWER
"⊥"	RECLAIMED WATER
"Λ "	POTABLE WATER
"X"	VALVE – POTABLE WATER

30. THREE (3) CONCRETE CYLINDERS SHALL BE TAKEN FOR EVERY SEVENTY-FIVE (75) CUBIC YARDS OF CONCRETE OR LESS PLACED. 1 CYLINDER WILL BE TESTED IN 14 DAYS, 1 IN 28 DAYS AND 1 SHALL BE RETAINED FOR 1 YEAR. RESULTS SHALL BE PROVIDED TO THE CITY'S DESIGNATED SITE INSPECTOR AS THEY BECOME AVAILABLE.
31. A CONCRETE SLUMP TEST SHALL BE REQUIRED WITHIN THE FIRST THIRTY (30) CUBIC YARDS OF CONCRETE. THEREAFTER, SLUMP TESTS SHALL BE REQUIRED FOR EVERY THIRTY (30) CUBIC YARDS OF CONCRETE, OR FRACTION THEREOF, WITH COPIES OF THE RESULTS PROVIDED TO THE CITY'S DESIGNATED SITE INSPECTOR. THE SLUMP TEST SHALL MEET THE REQUIRED MIX DESIGN ON EACH LOAD DELIVERED.
32. THE DEVELOPER SHALL PROVIDE ALL REQUIRED PAVEMENT MARKINGS ON ALL ROADWAYS PER CITY, COUNTY, AND STATE REQUIREMENTS. 6" WIDE FOG LINE SHALL BE INSTALLED WHERE NO CURB IS PRESENT. CENTERLINE STRIPES SHALL BE PROVIDED ON EXTENSIONS OF CITY COLLECTOR OR ARTERIAL ROADS, COUNTY ROADS, STATE HIGHWAYS AND ALONG LOCAL STREETS IN THE VICINITY OF THEIR INTERSECTION WITH THE ABOVE MENTIONED ROADWAYS.
33. A FDOT APPROVED 30" STOP SIGN AND A 24" WIDE WHITE THERMOPLASTIC STOP BAR ARE REQUIRED AT ALL ROADWAY INTERSECTIONS.
34. ALL TRAFFIC CONTROL DEVICES PLACED AT INTERSECTIONS, PRIVATE STREETS, PUBLIC STREETS, COUNTY ROADS AND STATE HIGHWAYS WITHIN THE CITY LIMITS SHALL BE INSTALLED ACCORDING TO THE MANUAL ON UNIFORM TRAFFIC CONTROL DEVICES, LATEST EDITION. THE MAINTENANCE OF TRAFFIC (MOT) INSTALLATION AND SUBSEQUENT OPERATION SHALL BE OVERSEEN BY A CONTRACTOR WHOSE JOBSITIE PERSONNEL HOLD A CURRENT FDOT CERTIFICATION IN TEMPORARY TRAFFIC CONTROL COMMENSURATE WITH THEIR LEVEL OF RESPONSIBILITY (EX. FLAGGER, INTERMEDIATE, ADVANCED).
35. THE DEVELOPER IS RESPONSIBLE FOR PAYING FEES FOR TRAFFIC CONTROL DEVICES. STREET SIGNS AND STOP SIGNS SHALL BE PLACED AT ALL INTERSECTIONS, INCLUDING, BUT NOT LIMITED TO, TO PRIVATE STREETS, PUBLIC STREETS, COUNTY ROADS AND STATE HIGHWAYS WITHIN THE CITY LIMITS.
36. THE DEVELOPER IS RESPONSIBLE FOR PAYING FEES FOR ALL STREET LIGHTS TO FPL PRIOR TO ACCEPTANCE OF THE PROJECT BY THE CITY.
37. FOUR FOOT (4') WIDE SIDEWALKS SHALL BE PROVIDED ON BOTH SIDES OF ALL RESIDENTIAL STREETS.
38. BIKE PATHS SHALL BE CONSTRUCTED EIGHT FEET (8') IN WIDTH ALONG ARTERIAL AND OTHER SELECTED HIGHWAYS AS DIRECTED BY THE CITY.

STANDARD CONSTRUCTION DETAIL
ROADWAY AND PARKING AREA DESIGN AND CONSTRUCTION NOTES (CONTINUED)
FILE NAME: R1.DWG
DETAIL REF: R-1.3
REV. 12/18

39. STANDARD TURNING RADII FOR INTERSECTIONS:

RESIDENTIAL STREETS INTERSECTING STATE OR COUNTY ROADWAYS OR MAJOR THOROUGHFARES WITHIN THE CITY	35-50 FEET
CITY STREETS INTERSECTING ENTRANCES TO COMMERCIAL SITES	35 FEET
INTERSECTIONS INTERIOR IN SUBDIVISIONS	35 FEET

NOTE: SHOULD VOLUSIA COUNTY OR THE FLORIDA DEPARTMENT OF TRANSPORTATION (FDOT) DETERMINE THAT LARGER RADII ARE WARRANTED WITHIN THEIR RIGHT-OF-WAY, THE LARGER RADII SHALL APPLY.

40. STANDARD TURNING RADII AND WIDTHS OF ACCESS DRIVES FOR SITE PLANS (NOT SUBDIVISONS) SHALL BE IN ACCORDANCE WITH LDC, CH. 12, SEC. 3(f).
41. CONSTRUCTION METHODS AND DESIGN FOR CONCRETE PAVEMENT SHALL CONFORM TO FDOT STANDARD SPECIFICATION FOR ROAD AND BRIDGE CONSTRUCTION, LATEST EDITION.
42. ALL CONTRACTORS THAT ARE PERFORMING THE CONSTRUCTION OF LAND DEVELOPMENT CODE REQUIRED IMPROVEMENTS (INCLUDING WATER MAINS, SANITARY SEWER MAINS, RECLAIMED WATER MAINS, STORM WATER PIPES AND INLETS, ROADWAYS, AND PARKING FACILITIES) SHALL BE CERTIFIED WITH THE STATE OF FLORIDA CONSTRUCTION INDUSTRY LICENSING BOARD FOR THE TYPE OF WORK THAT THEY PERFORM.
43. ALL CONTRACTORS THAT ARE PERFORMING THE CONSTRUCTION WORK OF LAND DEVELOPMENT CODE REQUIRED IMPROVEMENTS SHALL BE LICENSED BY THE STATE OF FLORIDA CONSTRUCTION INDUSTRY LICENSING BOARD AND REGISTERED WITH VOLUSIA COUNTY. THE LICENSE AND REGISTRATION SHALL PERTAIN TO THE TYPE OF WORK BEING PERFORMED.
44. EXCEPT AS PROVIDED IN THE LAND DEVELOPMENT CODE, ALL ELECTRIC, TELEPHONE, TELEVISION, LINES AND SIMILAR UTILITIES ARE REQUIRED TO BE INSTALLED UNDERGROUND AT THE EXPENSE OF THE OWNER, DEVELOPER, AND BUILDER.
45. MINIMUM UTILITY DEPTHS:

POTABLE WATER, SANITARY SEWER AND RECLAIMED WATER MAINS	36 INCHES
HIGH VOLTAGE SUCH AS POWER FEEDER, SERVICE, AND DROPS	30 INCHES
LOW VOLTAGE SUCH AS PHONE AND CABLE TV FOR FEEDER AND SERVICE	18 INCHES
LOW VOLTAGE UTILITIES SUCH AS PHONE AND CABLE TV FOR DROPS	12 INCHES

NOTE: IN NO INSTANCE SHALL THE DEPTH OF COVER BE LESS THAN 36" FROM FINISHED GRADE TO THE TOP OF PIPE FOR POTABLE WATER MAINS, SANITARY SEWER MAINS AND RECLAIMED WATER MAINS. HOWEVER, IN THE EVENT THAT THIS CONDITION CANNOT BE MET DUE TO UNANTICIPATED CONFLICTS DURING THE CONSTRUCTION PROCESS, DUCTILE IRON PRESSURE CLASS 350 OR CONCRETE ENCASEMENT MAY BE USED AS APPROVED BY THE CITY PUBLIC UTILITIES DEPARTMENT.

46. LANDSCAPE PLANS SHALL CLEARLY DEPICT THE DESIGN LOCATION OF PLANTINGS RELATIVE TO THE LOCATION OF UNDERGROUND AND OVERHEAD PUBLIC UTILITIES AND STORMWATER INFRASTRUCTURE IN ORDER TO EVALUATE POTENTIAL CONFLICTS.

STANDARD CONSTRUCTION DETAIL
ROADWAY AND PARKING AREA DESIGN AND CONSTRUCTION NOTES (CONTINUED)
FILE NAME: R1.DWG
DETAIL REF: R-1.4
REV. 12/18

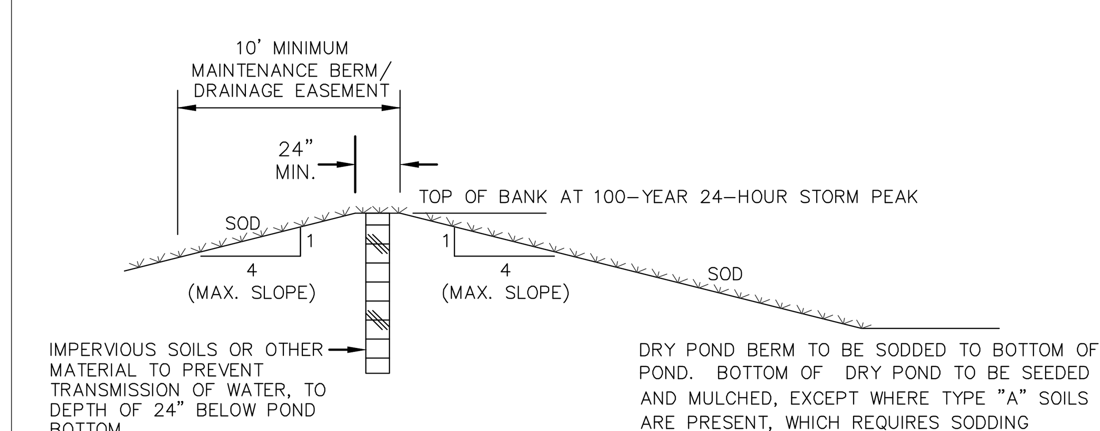

BERMED POND PERIMETER

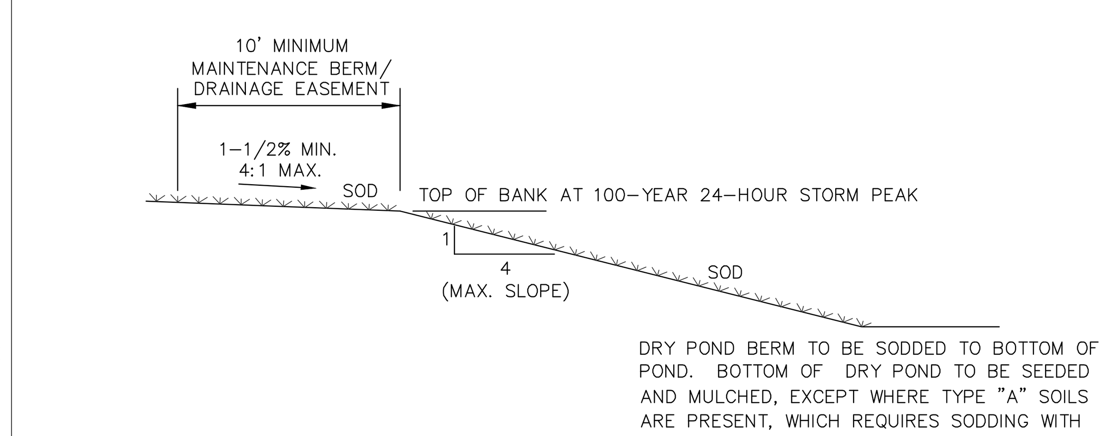

LEVEL POND PERIMETER

STANDARD CONSTRUCTION DETAIL
DRY POND
FILE NAME: ST8.DWG
DETAIL REF: ST-8
REV. 12/18

NO.	DATE	DESCRIPTION	BY
2	7/8/24	REVISED PER CITY COMMENTS	BVB
1	5/16/24	REVISED PER CITY COMMENTS	JD

REVISIONS

PARKER MYNCHENBERG & ASSOCIATES, INC.
PROFESSIONAL ENGINEERS * LANDSCAPE ARCHITECTS
1729 RIDGEWOOD AVENUE HOLLY HILL, FLORIDA 32117
(386) 677-6891 FAX (386) 677-2114 E-MAIL: info@parkermynchenberg.com
PARKER MYNCHENBERG P.E. #32645 R.L.A. #0001553,
STEVE BUSWELL P.E. #53985 R.L.A. #LA6667011
KEVIN A. LEE P.E. #71501
CERTIFICATE OF AUTHORIZATION NUMBER 00003910

CITY OF PORT ORANGE
FORESTRY DEPARTMENT BUILDING
PORT ORANGE * FLORIDA

PAVING & DRAINAGE DETAILS

5
SHEET NO.

File No.
Drawn By: BVB
Date: 10/25/2023
SCALE: NONE

SEAL

Z:\Port Orange Forestry Dept Building - 23---\DRAWINGS\0000DET.dwg, 7/8/2024 9:13:17 AM, PM, DWG To PDF.pc3, ARCH full bleed D (36.00 x 24.00 Inches), 1:1

1. WATER DISTRIBUTION SYSTEM SHALL BE DESIGNED TO COMPLY WITH THE CITY'S LATEST FIRE/WATER FLOW CODE. ALL DEDICATED FIRE LINES SHALL BE INDEPENDENT OF ALL OTHER DOMESTIC WATER SERVICES.
2. ALL SINGLE AND DOUBLE RESIDENTIAL WATER SERVICES SHALL BE ENDOT ENDOPURE 1". COMMERCIAL SERVICES SHALL BE 1" OR 2" – NO 1–1/2" SERVICES ARE ALLOWED. POLYETHYLENE TUBING SHALL BE USED, IN ACCORDANCE WITH THE FOLLOWING SPECIFICATIONS:
   A. POLYETHYLENE TUBING SHALL BE CTS 3408 HIGH DENSITY TUBING, BLUE IN COLOR, AND RATED FOR A MINIMUM OF 200 PSI WITH SDR OF 9 (CTS)
   B. THE TUBING SHALL COME WITH A LIFETIME WARRANTY
   C. THE TUBING SHALL HAVE A VIRGIN HIGH DENSITY POLYETHYLENE CENTER FOR WHICH THE MANUFACTURER SHALL FURNISH A CERTIFICATE OF PURITY
   D. THE TUBING SHALL HAVE UV PROTECTION AND SHALL NOT BE AFFECTED BY DIRECT SUNLIGHT. THE TUBING SHALL COMPLY WITH OR EXCEED THE APPLICABLE STANDARDS OF ASTM D1248, D3350, D2239, D2737, NSF 14 AND AWWA C901
3. WATER SERVICES SHALL BE NORMALLY DOUBLE 1" SERVICES LOCATED AT SIDE LOT LINES. AT LOCATIONS WHERE SERVICES NEED TO BE OFFSET, SUCH AS AT FIRE HYDRANTS, FPL TRANSFORMERS, ETC., 1" SINGLE SERVICES SHALL BE SPECIFIED. THESE SERVICES MAY BE OFFSET A MAXIMUM OF 2' FROM SIDE LOT LINES.
4. APPROVED WATER VALVE TYPES ARE THE FOLLOWING:
   - RESILIENT SEATED GATE VALVES EQUAL TO OR LESS THAN 24" DIAMETER, PER AWWA C–515
   - BUTTERFLY VALVES GREATER THAN 24" DIAMETER, PER AWWA C–504
   - TAPPING VALVES WITH MECHANICAL TAPPING SLEEVE
5. WATER VALVES SHALL BE PLACED AT ALL STREET INTERSECTIONS AND AT MAXIMUM SPACINGS OF 1,000
6. AT ALL WATER MAIN TEES AND CROSSES, VALVES SHALL BE INSTALLED ON ALL LEGS EXCEPT ONE.
7. WATER MAINS SHALL BE C–900 PVC, BLUE IN COLOR, OR DIP PRESSURE CLASS 350 STANDARD CEMENT LINED UNLESS OTHERWISE APPROVED BY THE CITY. WATER MAINS 10" OR GREATER SHALL BE DIP.
8. PVC FITTINGS 4–INCH THROUGH 36–INCH SHALL BE PVC (OR DIP WITH PROTECTO 401) INJECTION–MOLDED OR FABRICATED AS SPECIFIED, MADE OF MATERIALS MEETING OR EXCEEDING THE REQUIREMENTS OF CELL CLASS 12454–B MATERIAL AS DEFINED IN ASTM D1784. FABRICATED FITTINGS SHALL BE MANUFACTURED WITH PIPE THAT MEETS OR EXCEEDS AWWA C–905 STANDARD, AND SHALL BE FIBERGLASS REINFORCED TO A PRESSURE RATING OF 165 PSI. ALL PVC OR MECHANICAL JOINT FITTINGS MUST COMPLY WITH OR EXCEED ANSI/AWWA C907, UNI–B–14 STANDARDS AS THEY APPLY TO THE APPROPRIATE SIZE RANGE AND METHOD OF MANUFACTURE.
9. ALL HDPE PIPE UTILIZED FOR WATER, FORCE MAIN AND/OR RECLAIMED WATER MAIN EXTENSIONS SHALL BE SDR 11 WITH #10 COPPERHEAD TRACER WIRE UNLESS SPECIFICALLY NOTED OTHERWISE. THE HDPE PIPE SHALL BE SIZED TO MATCH THE EXTERNAL DIAMETER OF THE PVC OR DIP PIPE TO WHICH IT IS ATTACHED.
10. ALL VALVES 2" AND LARGER SHALL BE S RESILIENT SEATED GATE VALVES (CORP STOPS ARE NOT ACCEPTABLE).
11. MEGALUGS, BOLTLESS RESTRAINED JOINTS OR GRIPPER GASKETS SHALL BE USED ON ALL RESTRAINED JOINT INSTALLATIONS. MINIMUM DEPTH OF BURY ON PIPES NOT MEETING REQUIRED COVER REQUIREMENTS SHALL FOLLOW THE MOST RECENT DIPRA THRUST RESTRAINT DESIGN GUIDELINES USING TORQUE WRENCHES PER MANUFACTURERS RECOMMENDATION.
12. WATER MAINS SHALL HAVE A MINIMUM COVER OF 36 INCHES AND A MAXIMUM DEPTH OF 48 INCHES FROM FINAL GRADE. CONFLICT LOCATIONS OR SPECIAL CIRCUMSTANCES NOT MEETING THESE REQUIREMENTS MAY BE APPROVED WHEN IT IS DETERMINED TO BE IN THE BEST INTEREST OF THE CITY.

STANDARD CONSTRUCTION DETAIL
POTABLE WATER DESIGN NOTES
FILE NAME: W1.DWG
DETAIL REF: W-1
REV. 12/18

13. WATER MAINS SHALL BE INSTALLED APPROXIMATELY 4'OFF THE BACK OF CURB OR AS APPROVED BY THE CITY. FOR CONSTRUCTION PURPOSES, THE PLANS SHALL DIMENSION THE PROPOSED LOCATIONS OF ALL WATER MAINS MEASURED FROM THE BACK OF CURB (OR EDGE OF PAVEMENT, IF NO CURB IS USED).
14. 3" METALLIZED PIPE LOCATION TAPE SHALL BE LOCATED BETWEEN 15" AND 24" BELOW FINISHED GRADE OR AS SPECIFIED BY MANUFACTURER FOR ALL PVC LINES. MARKER TAPE SHALL BE USED ON ALL DUCTILE IRON PIPE, AS WELL.
15. LANDSCAPE PLANS SHALL CLEARLY DEPICT THE DESIGN LOCATION OF PLANTINGS RELATIVE TO THE LOCATION OF PUBLIC UTILITIES AND STORMWATER INFRASTRUCTURE IN ORDER TO EVALUATE POTENTIAL CONFLICTS.
16. THE FIRE DEPARTMENT CONNECTION (FDC) FOR BUILDINGS WITH A FIRE PROTECTION SPRINKLER SYSTEM MUST BE WITHIN 50'OF UNOBSTRUCTED PATH TO A FIRE HYDRANT LOCATION APPROVED BY THE FIRE MARSHALL AND/OR PUBLIC UTILITIES ENGINEER.
17. A MINIMUM OF ONE FIRE HYDRANT SHALL BE LOCATED AT EVERY INTERSECTION. OTHER FIRE HYDRANTS SHALL BE LOCATED SO AS TO PRODUCE A MAXIMUM 250'FEET AND/OR MEETING THE LATEST NFPA CODE HOSE LAY REQUIREMENT ALONG THE STREET FOR ALL RESIDENTIAL BUILDINGS. FIRE HYDRANTS MAY NOT BE INSTALLED WITHIN 20' OF ANY ELECTRICAL TRANSFORMER.
18. NEW OR RELOCATED, UNDERGROUND MAINS SHALL BE LAID TO PROVIDE THE FOLLOWING MINIMUM HORIZONTAL SEPARATIONS (OUTSIDE TO OUTSIDE):

	WATER	STORM GRAVITY	STORM FORCE	RECLAIM	SANITARY GRAVITY	SANITARY FORCE
WATER		3'	3'	3'	6', PREFERRED 10'	6', PREFERRED 10'
STORM GRAVITY	3'		3'	3'	6', PREFERRED 10'	6', PREFERRED 10'
STORM FORCE	3'	3'		3'	6', PREFERRED 10'	6', PREFERRED 10'
RECLAIM	3'	3'	3'		6', PREFERRED 10'	6', PREFERRED 10'
SANITARY GRAVITY	6', PREFERRED 10'	6', PREFERRED 10'	6', PREFERRED 10'	6', PREFERRED 10'		6', PREFERRED 10'
SANITARY FORCE	6', PREFERRED 10'	6', PREFERRED 10'	6', PREFERRED 10'	6', PREFERRED 10'	6', PREFERRED 10'	

19. A 3'MINIMUM HORIZONTAL SEPARATION BETWEEN THE WATER AND SANITARY GRAVITY MAINS SHALL BE ALLOWED WHEN THE WATER MAIN IS INSTALLED IN A SEPARATE TRENCH OR ON AN UNDISTURBED EARTH SHELF AT LEAST 6" ABOVE THE SANITARY GRAVITY MAIN.

STANDARD CONSTRUCTION DETAIL
POTABLE WATER DESIGN NOTES (CONTINUED)
FILE NAME: W1.DWG
DETAIL REF: W-1.1
REV. 12/18

20. NEW OR RELOCATED, UNDERGROUND MAINS SHALL BE LAID TO PROVIDE THE FOLLOWING MINIMUM CROSSING/VERTICAL SEPARATIONS (OUTSIDE TO OUTSIDE):

	WATER	STORM GRAVITY	STORM FORCE	RECLAIM	SANITARY GRAVITY	SANITARY FORCE
WATER		OVER STORM GRAVITY 6", PREFERRED 12" UNDER STORM GRAVITY 12"	OVER STORM FORCE 12" UNDER STORM FORCE 12"	OVER RECLAIM 12" UNDER RECLAIM 12"	OVER SANITARY GRAVITY 6", PREFERRED 12" UNDER SANITARY GRAVITY 12"	OVER SANITARY FORCE 12" UNDER SANITARY FORCE 12"
STORM GRAVITY	OVER WATER 12" UNDER WATER 6", PREFERRED 12"		OVER STORM FORCE 6" UNDER STORM FORCE 6"	OVER RECLAIM 6", PREFERRED 12" UNDER RECLAIM 12"	OVER SANITARY GRAVITY 6", PREFERRED 12" UNDER SANITARY GRAVITY 12"	OVER SANITARY FORCE 6", PREFERRED 12" UNDER SANITARY FORCE 12"
STORM FORCE	OVER WATER 12" UNDER WATER 12"	OVER STORM GRAVITY 6" UNDER STORM GRAVITY 6"		OVER RECLAIM 12" UNDER RECLAIM 12"	OVER SANITARY GRAVITY 12" UNDER SANITARY GRAVITY 12"	OVER SANITARY FORCE 12" UNDER SANITARY FORCE 12"
RECLAIM	OVER WATER 12" UNDER WATER 12"	OVER STORM GRAVITY 12" UNDER STORM GRAVITY 6", PREFERRED 12"	OVER STORM FORCE 12" UNDER STORM FORCE 12"		OVER SANITARY GRAVITY 12" UNDER SANITARY GRAVITY 12"	OVER SANITARY FORCE 12" UNDER SANITARY FORCE 12"
SANITARY GRAVITY	OVER WATER 12" UNDER WATER 6", PREFERRED 12"	OVER STROM GRAVITY 12" UNDER STORM GRAVITY 6", PREFERRED 12"	OVER STORM FORCE 12" UNDER STORM FORCE 12"	OVER RECLAIM 12" UNDER RECLAIM 12"		OVER SANITARY FORCE 12" UNDER SANITARY FORCE 12"
SANITARY FORCE	OVER WATER 12" UNDER WATER 12"	OVER STORM GRAVITY 12" UNDER STORM GRAVITY 6", PREFERRED 12"	OVER STORM FORCE 12" UNDER STORM FORCE 12"	OVER RECLAIM 12" UNDER RECLAIM 12"	OVER SANITARY GRAVITY 12" UNDER SANITARY GRAVITY 12"	

STANDARD CONSTRUCTION DETAIL
POTABLE WATER DESIGN NOTES (CONTINUED)
FILE NAME: W1.DWG
DETAIL REF: W-1.2
REV. 12/18

1. THE CITY'S PUBLIC UTILITIES DEPARTMENT (386) 506-5750 SHALL BE GIVEN A MINIMUM OF 2 BUSINESS DAYS ADVANCE NOTICE (NOT INCLUDING HOLIDAYS OR WEEKENDS) PRIOR TO BEGINNING ANY POTABLE WATER SYSTEM CONSTRUCTION.
2. ALL WORK PERFORMED ON THE POTABLE WATER FACILITIES OWNED OR PROPOSED TO BE OWNED BY THE CITY SHALL BE CONSTRUCTED BY A STATE CERTIFIED UNDERGROUND UTILITY CONTRACTOR OR GENERAL CONTRACTOR LICENSED IN THE STATE OF FLORIDA AND REGISTERED WITH THE CITY.
3. NEWLY CONSTRUCTED POTABLE WATER SYSTEM EXTENSIONS MAY NOT BE USED PRIOR TO FINAL TESTING, CLEARANCE AND ACCEPTANCE BY THE CITY OF PORT ORANGE. THIS INCLUDES CONSTRUCTION WATER REQUIRED FOR SEWER LINE CLEANING OR RELATED USES.
4. ALL TAPPING OF MAINS SHALL BE PERFORMED BY THE CITY AND BILLED IN ACCORDANCE WITH THE ADOPTED FEE RESOLUTION. SCHEDULING OF THESE CONNECTIONS OR TAPPINGS SHALL REQUIRE A MINIMUM OF 2 BUSINESS DAYS, DIRECTED TO THE CITY'S DESIGNATED SITE INSPECTOR WHO SHALL COORDINATE THE WORK DIRECTLY WITH THE PUBLIC UTILITIES DEPARTMENT. SUBSEQUENTLY, THE CONNECTION SHALL BE SCHEDULED TO COMMENCE BETWEEN 8:00 A.M. AND NOON ON THE APPROPRIATE DAY.
5. CONTRACTOR SHALL PREPARE A SAFE, SECURE AND DRY EXCAVATION FOR THE TAPPING OF MAINS BY THE CITY. THE BOTTOM OF THE EXCAVATION SHALL HAVE A MINIMUM OF 6" THICK BEDDING OF #57 STONE. ALL EXCAVATIONS GREATER THAN 5 FEET IN DEPTH SHALL COMPLY WITH THE TRENCH SAFETY ACT.
6. THE CITY RESERVES THE RIGHT TO REQUIRE TIE-IN CONNECTIONS TO BE PERFORMED DURING PERIODS OF LOW FLOW (MIDNIGHT TO 6:00 A.M.) IN ORDER TO MINIMIZE SERVICE DISRUPTION TO EXISTING CUSTOMERS. THE INSTALLATION OF LINE STOPPING DEVICES ON PRESSURE MAIN (POTABLE WATER, RECLAIM WATER AND SANITARY FORCE MAINS) MAY BE REQUIRED ON ANY REQUESTED UTILITY OUTAGE AT THE DISCRETION OF PUBLIC UTILITIES DEPARTMENT TO MINIMIZE INTERRUPTION TO EXISTING UTILITY CUSTOMERS.
7. ALL METERS SHALL BE PROVIDED BY THE CITY IN ACCORDANCE WITH THE ADOPTED FEE RESOLUTION. METERS AND VAULTS FOR METERS 2" OR LESS WILL BE PROVIDED AND INSTALLED BY THE CITY. METERS 4" OR GREATER WILL BE PROVIDED BY THE CITY AND INSTALLED BY THE OWNER/DEVELOPER/CONTRACTOR. ALL UNDERGROUND VAULTS FOR METERS 4" OR GREATER WILL BE PROVIDED AND INSTALLED BY THE OWNER/DEVELOPER/CONTRACTOR. NOTE: LARGE COMMERCIAL RECLAIMED WATER METERS GREATER THAN 4" TAKE A MINIMUM OF 6 WEEKS FOR DELIVERY AFTER FEES ARE PAID TO THE CITY.
8. DEWATERING SHALL BE PROVIDED TO KEEP GROUNDWATER ELEVATION A MINIMUM OF 6 INCHES BELOW WATER MAIN BEING LAID.
9. ALL WATER MAINS SHALL BE LAID ON A FIRM FOUNDATION WITH ALL UNSUITABLE MATERIAL (MUCK, ROCK, COQUINA, ETC.) REMOVED AND REPLACED WITH CLEAN GRANULAR MATERIAL.
10. TRENCHES SHALL BE BACKFILLED WITH MATERIAL ACCEPTABLE TO THE CITY WITH A MINIMUM COMPACTION OF 98% IN PAVED AREAS AND 95% IN UNPAVED AREAS IN ACCORDANCE WITH AASHTO T-180.
11. IT SHALL BE THE CONTRACTORS RESPONSIBILITY TO ENSURE THAT TRENCH COMPACTION TESTS BE PROVIDED AT POINTS 1 FOOT ABOVE THE PIPE AND AT 1 FOOT VERTICAL INTERVALS TO FINISH GRADE, AT A MINIMUM SPACING OF EVERY 300 FEET.
12. ALL PVC PIPE SHALL BE STORED IN SUCH A WAY AS TO PREVENT WARPING, DEFLECTION, OR ANY DEFORMATION.
13. NO USED, RE-USED, RUSTED, SECOND HAND, OR ANY MATERIAL THAT IS NOT NEW SHALL BE USED IN ANY UTILITY IMPROVEMENT PROJECTS WITHIN THE CITY'S SERVICE AREA.
14. ALL POTABLE WATER MAINS SHALL USE A THRUST RESTRAINT JOINT METHOD IN COMPLIANCE WITH THE DUCTILE IRON PIPE RESEARCH ASSOCIATION (DIPRA) GUIDELINES. IN THE EVENT THAT PVC PIPE IS SPECIFIED, THE RESTRAINT JOINT SHALL BE MODIFIED IN ACCORDANCE WITH THE RECOMMENDED ADDITIONAL RESTRAINT LENGTH REQUIRED FOR PIPE WRAPPED WITH POLYETHYLENE.

STANDARD CONSTRUCTION DETAIL
POTABLE WATER CONSTRUCTION NOTES
FILE NAME: W2.DWG
DETAIL REF: W-2
REV. 12/18

15. AT THE UTILITY CROSSINGS, ONE FULL LENGTH OF WATER MAIN PIPE SHALL BE CENTERED ABOVE OR BELOW THE OTHER PIPELINE SO THE WATER MAIN JOINTS WILL BE AS FAR AS POSSIBLE FROM THE OTHER PIPELINE. ALTERNATIVELY, AT SUCH CROSSINGS, THE PIPES SHALL BE ARRANGED SO THAT ALL WATER MAIN JOINTS ARE AT LEAST THREE FEET FROM ALL JOINTS IN VACUUM-TYPE SANITARY SEWERS, STORM SEWERS, STORMWATER FORCE MAINS OR PIPELINES CONVEYING RECLAIMED WATER REGULATED UNDER PART III OF CHAPTER 62-610 FAC AND AT LEAST SIX FEET FROM ALL JOINTS IN GRAVITY- OR PRESSURE-TYPE SANITARY SEWERS, WASTEWATER FORCE MAINS, OR PIPELINES CONVEYING RECLAIMED WATER NOT REGULATED UNDER PART III OF CHAPTER 62-610, FAC.
16. ALL WATER SERVICE ENDINGS SHALL BE MARKED WITH A 2"X 4" LUMBER (PRESSURE TREATED) EXTENDING 4 FEET ABOVE GRADE, WITH WATER SERVICES SECURED 12" MAXIMUM ABOVE THE GROUND. ALL SERVICES SHALL BE LOCKED AT THE TIME OF FINAL INSPECTION BY THE CONTRACTOR IN THE PRESENCE OF THE CITY INSPECTOR OR CITY PERSONNELL, AFTER THEY HAVE BEEN INSPECTED AND VERIFIED TO OPERATE PROPERLY.
17. ALL WATER VALVES SHALL BE ADJUSTED TO FINISHED GRADE AND THE CAPS PAINTED BLUE TO MAKE THEM PLAINLY VISIBLE.
18. WATER SYSTEMS SHALL BE PRESSURE TESTED AT 150 PSI STATIC PRESSURE FOR A PERIOD OF 2 HOURS PER AWWA STANDARDS.
19. IN AREAS WHERE RECLAIMED WATER IS NOT AVAILABLE THE CONTRACTOR SHALL BE REQUIRED TO (UPON SATISFACTORY COMPLETION OF THE PRESSURE TEST) TRANSFER THE WATER FROM THE POTABLE WATER LINES TO THE RECLAIMED WATER LINES FOR UTILIZATION IN THEIR PRESSURE TEST.
20. THE CONTRACTOR SHALL BE REQUIRED TO PIG ALL POTABLE MAINS 6" AND LARGER IN DIAMETER AND PRIMARY DISTRIBUTION MAINS LOCATED ON COLLECTOR AND ARTERIAL ROADWAYS. ALL PIGS SHALL BE NEW. NO FOAM PIGS ARE ALLOWED. LAUNCHING AND EXTRACTION POINTS SHALL BE DETERMINED BY THE CONTRACTOR. ALL PIGGING OPERATIONS SHALL BE WITNESSED BY A PUBLIC UTILITIES REPRESENTATIVE OR A CITY UTILITY INSPECTOR
21. ALL PROPOSED POTABLE WATER MAINS SHALL BE FLUSHED, DISINFECTED, PRESSURE TESTED AND BACTERIOLOGICALLY CLEARED FOR SERVICE WHEN APPROPRIATE IN ACCORDANCE WITH THE LATEST AWWA STANDARDS AND THE FLORIDA DEPARTMENT OF ENVIRONMENTAL PROTECTION REQUIREMENTS. THE CONTRACTOR SHALL NOTIFY THE CITY'S DESIGNATED SITE INSPECTOR WHO SHALL COORDINATE WITH CITY PERSONNEL AT THE WATER TREATMENT PLANT AT LEAST 2 BUSINESS DAYS PRIOR TO BEGINNING FLUSH OF THE MAINS AND PRIOR TO THE COMMENCEMENT OF PRESSURE TESTING.
22. THE PHYSICAL TAKING OF WATER SAMPLE FOR BACTERIOLOGICAL TESTING SHALL BE DONE BY THE CITY'S LABORATORY PERSONNEL. THE CONTRACTOR SHALL NOTIFY THE CITY'S DESIGNATED SITE INSPECTOR AT LEAST TWO BUSINESS DAY PRIOR TO NEEDING SAMPLES TAKEN TO COORDINATE WITH THE LABORATORY. ALL SAMPLING FORMS WILL BE COMPLETED BY THE CITY'S DESIGNATED LABORATORY PERSONNEL. THE CITY'S LABORATORY WILL CONDUCT THE TESTING IN ACCORDANCE WITH THE LATEST AWWA STANDARDS AND THE FLORIDA DEPARTMENT OF ENVIRONMENTAL PROTECTION REQUIREMENTS. THE RESULTS WILL BE FORWARDED TO THE CONTRACTOR AND ENGINEER OF RECORD. IF THE INITIAL DISINFECTION OR OTHER RESULTS INDICATE UNACCEPTABLE WATER QUALITY, THE MAIN SHALL BE RE-FLUSHED, RE-SAMPLED AND RE-TESTED. IF CHECK SAMPLES FAIL TO PRODUCE ACCEPTABLE RESULTS, THE CYCLE WILL BE REPEATED (FLUSH, CHLORINATE, SAMPLE, TEST, AND RE-FLUSH, RE-SAMPLE, RE-TEST, AS NEEDED) UNTIL SATISFACTORY RESULTS ARE OBTAINED.

STANDARD CONSTRUCTION DETAIL
POTABLE WATER DESIGN NOTES (CONTINUED)
FILE NAME: W2.DWG
DETAIL REF: W-2.1
REV. 12/18

23. WHEN THE PUBLIC UTILITIES OFFICE RECEIVES POTABLE WATER CLEARANCE REQUEST REQUIRING SIGNATURE, THE CITY'S DISTRIBUTION SUPERVISOR AND/OR DESIGNATED SITE INSPECTOR WILL BE CONTACTED TO INDEPENDENTLY VERIFY THAT THE SYSTEM IS IN PROPERLY FUNCTIONING ORDER (I.E. ALL VALVES, HYDRANTS, AND WATER SERVICES ARE ACCESSIBLE AND OPERABLE). SIMULTANEOUSLY, THE CITY MAY ALSO TAKE A RANDOM BACTERIOLOGICAL SAMPLE WITHIN THE NEW SYSTEM TO VERIFY THAT WATER IS SAFE FOR CONSUMPTION. ONCE THE DISTRIBUTION SUPERVISOR AND/OR DESIGNATED SITE INSPECTOR HAVE VERIFIED THAT THE SYSTEM IS IN PROPER FUNCTIONING ORDER AND THAT THE BACTERIOLOGICAL SAMPLE(S) INDICATE THE WATER IS SAFE FOR CONSUMPTION, THE PUBLIC UTILITIES OFFICE WILL THEN SIGN OFF ON THE WATER CLEARANCE REQUEST.
24. UPON CONSTRUCTION COMPLETION AND ACCEPTANCE OF THE SYSTEM, IT SHALL BE THE DESIGN ENGINEER'S RESPONSIBILITY TO ENSURE THAT THE SYSTEM IS PROPERLY CERTIFIED AND ACCEPTED BY THE DEPARTMENT OF HEALTH AND AS-BUILTS ARE PROVIDED TO THE CITY PRIOR TO ANY PUBLIC USE OF THIS SYSTEM.
25. UPON FINAL ACCEPTANCE OF NEW WATER SYSTEMS, WATER VALVES SHALL BE COMPLETELY OPENED BY PUBLIC UTILITIES PERSONNEL. AT NO TIME SHALL CONTRACTOR OPERATE ANY EXISTING VALVES.
26. ALL FIRE HYDRANTS SHALL BE LOCATED TO MAKE THEM EASILY ACCESSIBLE TO FIRE PERSONNEL IN CASE OF A FIRE. THE PRIMARY HYDRANT PORT SHALL ALWAYS FACE THE STREET. 5 FEET MINIMUM RADIUS CLEAR AREA AROUND THE FIRE HYDRANT SHALL BE MAINTAINED.
27. ALL WATER SERVICES SHALL BE MARKED WITH AN "/\" SAW CUT INTO THE CURB OR BY METAL TABS SET INTO THE PAVEMENT.
28. ALL WATER VALVES SHALL BE MARKED WITH AN "X" SAW CUT INTO THE CURB OR BY METAL TABS SET INTO THE PAVEMENT. BLOW-OFFS SHALL BE MARKED SIMILARLY, AS WELL. REVERSE TAPPING VALVE SHALL BE MARKED WITH AN "X ↑" SAW CUT INTO THE CURB OR PAVEMENT WITH THE ARROW POINTING TO THE DIRECTION OF THE PRESSURE MAIN RUN.

STANDARD CONSTRUCTION DETAIL
POTABLE WATER DESIGN NOTES (CONTINUED)
FILE NAME: W2.DWG
DETAIL REF: W-2.2
REV. 12/18

FIRE HYDRANT (5 ¼"BARREL)

MANUFACTURER	MODEL #
AMERICAN AVK CO.	SERIES #2780
AMERICAN DARLING	5 ¼"B–84–B5
CLOW	MEDALLION #F–2545 SS
EJ GROUP, INC.	WATERMASTER 5 ¼"#5CD250
KENNEDY	GUARDIAN K81–D
MUELLER	A423 SUPER CENTURION 250

AIR RELEASE VALVES

MANUFACTURER	MODEL #
VENT–O–MAT	RBX 2521

GATE VALVES AND TAPPING VALVES –RESILIENT SEATED (AWWA C509 AND C515) 24"OR SMALLER (VALVE WEDGE TO BE COMPLETE ENCLOSED WITH EPDM RUBBER)

MANUFACTURER	MODEL #
AMERICAN AVK CO.	SERIES 3, 18, 25, 45, 55, & 66
AMERICAN FLOW CONTROL	SERIES 2500
CLOW	MODEL 2638 AND 2639
KENNEDY	C509, C515
MUELLER	A–2360, A–2361, T–2360 & T–2361

STANDARD CONSTRUCTION DETAIL
POTABLE WATER APPROVED PRODUCTS
FILE NAME: W3.DWG
DETAIL REF: W-3
REV. 12/18

WATER SERVICE MATERIALS

DUCTILE IRON

MATERIAL	ASTM A536 MINIMUM GRADE 70 50 5 IN ACCORDANCE WITH AWWA C153 (ANSI A21.53)
PRESSURE	CLASS 350 IN ACCORDANCE WITH AWWA C153 (ANSI A21.53) 350 PSI WATER WORKING PRESSURE
TESTING	IN ACCORDANCE WITH AWWA C153 (ANSI A21.53) THREE TIMES WATER WORKING PRESSURE (350 PSI) BODY CAPABLE OF WITHSTANDING HYDROSTATIC TEST OF 1050 PSI
FLOW	IE EQUAL TO ID OF CLASS 50/51 DUCTILE IRON PIPE, THUS ALLOWING THE FULL FLOW FEATURE
LAYING LENGTH	SHORT BODY (COMPACT)
CEMENT LINING	IN ACCORDANCE WITH AWWA C104 (ANSI A21.4)
MECHANICAL JOINTS	IN ACCORDANCE WITH AWWA C111 (ANSI A21.11)
GASKETS	SBR IN ACCORDANCE WITH AWWA C111 (ANSI A21.11)
TEE HEAD BOLTS	COR TEN IN ACCORDANCE WITH AWWA C111 (ANSI A21.11)
ACCEPTABLE MANUFACTURERS	TYLER, CLOW, GRIFFIN, U.S. PIPE, UNION FOUNDRY, AMERICAN CAST IRON, OR APPROVED EQUALS

POLYETHYLENE TUBING –(BLUE WITH UV PROTECTION (SDR 9) 1"& 2"ONLY)

MANUFACTURER	MODEL #
ENDOT ENDOPURE	ENDOTRACE W/#10 COPPERHEAD TRACER WIRE

STANDARD CONSTRUCTION DETAIL
POTABLE WATER APPROVED PRODUCTS (CONTINUED)
FILE NAME: W2.DWG
DETAIL REF: W-3.1
REV. 12/18

NO.	DATE	DESCRIPTION	BY
2	7/8/24	REVISED PER CITY COMMENTS	BVB
1	5/16/24	REVISED PER CITY COMMENTS	JD

REVISIONS

PARKER MYNCHENBERG & ASSOCIATES, INC.
PROFESSIONAL ENGINEERS * LANDSCAPE ARCHITECTS
1729 RIDGEWOOD AVENUE HOLLY HILL, FLORIDA 32117
(386) 677–6891 FAX (386) 677–2114 E–MAIL: info@parkermynchenberg.com
PARKER MYNCHENBERG P.E. #32645 R.L.A. #0001553,
STEVE BUSWELL P.E. #53985 R.L.A. #LA6667011
KEVIN A. LEE P.E. #71501
CERTIFICATE OF AUTHORIZATION NUMBER 00003910

CITY OF PORT ORANGE
FORESTRY DEPARTMENT BUILDING
PORT ORANGE * FLORIDA

WATER STANDARD DETAILS

6
SHEET NO.

File No.
Drawn By: BVB
Date: 10/25/2023
SCALE: NONE

SEAL

Z:\Port Orange Forestry Dept Building - 23---\DRAWINGS\0000DET.dwg, 7/8/2024 9:13:57 AM, PM, DWG To PDF.pc3, ARCH full bleed D (36.00 x 24.00 Inches), 1:1

OVE

1. RESIDENTIAL RECLAIM WATER CONNECTIONS SHALL BE 1 1/2" WITH DOUBLE SERVICES. SERVICES SHALL CONSIST OF ENDOT ENDOPURE TUBING IN ACCORDANCE WITH THE FOLLOWING SPECIFICATIONS:
   A. POLYETHYLENE TUBING SHALL BE CTS 3408 HIGH DENSITY POLYETHYLENE TUBING, PURPLE IN COLOR, AND RATED FOR A MINIMUM OF 200 PSI WITH SDR OF 9 (CTS)
   B. "RECLAIMED WATER" PERMANENTLY PRINTED ON THE OUTSIDE
   C. THE TUBING SHALL COME WITH A LIFETIME WARRANTY
   D. THE TUBING SHALL HAVE A VIRGIN HIGH DENSITY POLYETHYLENE CENTER FOR WHICH THE MANUFACTURER SHALL FURNISH A CERTIFICATE OF PURITY
   E. THE TUBING SHALL HAVE UV PROTECTION AND SHALL NOT BE AFFECTED BY DIRECT SUNLIGHT
   F. THE TUBING SHALL COMPLY WITH OR EXCEED THE APPLICABLE STANDARDS OF ASTM D1248, D3350, D2239, D2737, NSF 14 AND AWWA C901
2. ALTERNATE RESIDENTIAL RECLAIM WATER SERVICE AT LOCATIONS WHERE ONE SERVICE IS NEEDED OR WHERE SERVICES NEED TO BE OFFSET, SUCH AS AT FIRE HYDRANTS, FPL TRANSFORMERS, ETC., SHALL BE A 1" CONNECTION. THESE SERVICES MAY BE OFFSET A MAXIMUM OF 2' FROM SIDE LOT LINES.
3. APPROVED RECLAIM WATER VALVE TYPES ARE THE FOLLOWING:
   - RESILIENT SEATED GATE VALVES EQUAL TO OR LESS THAN 24" DIAMETER, PER AWWA C–515
   - BUTTERFLY VALVES GREATER THAN 24" DIAMETER, PER AWWA C–504
   - TAPPING VALVES WITH MECHANICAL TAPPING SLEEVE
4. RECLAIM WATER VALVES SHALL BE PLACED AT ALL STREET INTERSECTIONS AND AT MAXIMUM SPACINGS OF 1,000'.
5. AT ALL RECLAIM WATER MAIN TEES AND CROSSES, VALVES SHALL BE INSTALLED ON ALL LEGS EXCEPT ONE.
6. A 75' SETBACK DISTANCE SHALL BE PROVIDED FROM PUBLIC ACCESS REUSE WETTED AREAS TO ANY PUBLIC AND ANY PRIVATE POTABLE WATER SUPPLY WELLS.
7. LOW TRAJECTORY NOZZLES ARE REQUIRED WITHIN 100' OF PUBLIC EATING, DRINKING OR BATHING FACILITIES.
8. RECLAIM WATER MAINS SHALL BE C–900 PVC, PURPLE IN COLOR, OR DIP PRESSURE CLASS 350 STANDARD CEMENT LINED UNLESS OTHERWISE APPROVED BY THE CITY. WATER MAINS 10" OR GREATER SHALL BE DIP.
9. PVC FITTINGS 4–INCH THROUGH 36–INCH SHALL BE PVC (OR DIP WITH PROTECTO 401) INJECTION–MOLDED OR FABRICATED AS SPECIFIED, MADE OF MATERIALS MEETING OR EXCEEDING THE REQUIREMENTS OF CELL CLASS 12454–B MATERIAL AS DEFINED IN ASTM D1784. FABRICATED FITTINGS SHALL BE MANUFACTURED WITH PIPE THAT MEETS OR EXCEEDS AWWA C–905 STANDARD, AND SHALL BE FIBERGLASS REINFORCED TO A PRESSURE RATING OF 165 PSI. ALL PVC OR MECHANICAL JOINT FITTINGS MUST COMPLY WITH OR EXCEED ANSI/AWWA C907, UNI–B–14 STANDARDS AS THEY APPLY TO THE APPROPRIATE SIZE RANGE AND METHOD OF MANUFACTURE.
10. ALL VALVES 2" AND LARGER SHALL BE S RESILIENT SEATED GATE VALVES (CORP STOPS ARE NOT ACCEPTABLE).
11. MEGALUGS, BOLTLESS RESTRAINED JOINTS OR GRIPPER GASKETS SHALL BE USED ON ALL RESTRAINED JOINT INSTALLATIONS. MINIMUM DEPTH OF BURY ON PIPES NOT MEETING REQUIRED COVER REQUIREMENTS SHALL FOLLOW THE MOST RECENT DIPRA THRUST RESTRAINT DESIGN GUIDELINES USING TORQUE WRENCHES PER MANUFACTURERS RECOMMENDATION.
12. ALL HDPE PIPE UTILIZED FOR RECLAIMED WATER MAIN EXTENSIONS SHALL BE SDR 11 WITH #10 COPPERHEAD TRACER WIRE UNLESS SPECIFICALLY NOTED OTHERWISE. THE HDPE PIPE SHALL BE SIZED TO MATCH THE EXTERNAL DIAMETER OF THE PVC OR DIP PIPE TO WHICH IT IS ATTACHED.

STANDARD CONSTRUCTION DETAIL
RECLAIMED WATER DESIGN NOTES
REV. 12/18 — FILE NAME: RW1.DWG — DETAIL REF: RW-1

13. RECLAIM WATER MAINS SHALL HAVE A MINIMUM COVER OF 36 INCHES AND A MAXIMUM DEPTH OF 48 INCHES FROM FINAL GRADE. CONFLICT LOCATIONS OR SPECIAL CIRCUMSTANCES NOT MEETING THESE REQUIREMENTS MAY BE APPROVED WHEN IT IS DETERMINED TO BE IN THE BEST INTEREST OF THE CITY.
14. RECLAIM WATER MAINS SHALL BE INSTALLED APPROXIMATELY 4' OFF THE BACK OF CURB OR AS APPROVED BY THE CITY. FOR CONSTRUCTION PURPOSES, THE PLANS SHALL DIMENSION THE PROPOSED LOCATIONS OF ALL RECLAIM WATER MAINS MEASURED FROM THE BACK OF CURB (OR EDGE OF PAVEMENT, IF NO CURB IS USED).
15. 3" METALLIZED PIPE LOCATION TAPE SHALL BE LOCATED BETWEEN 15" AND 24" BELOW FINISHED GRADE OR AS SPECIFIED BY MANUFACTURER FOR ALL PVC AND DIP LINES.
16. LANDSCAPE PLANS SHALL CLEARLY DEPICT THE DESIGN LOCATION OF PLANTINGS RELATIVE TO THE LOCATION OF PUBLIC UTILITIES AND STORMWATER INFRASTRUCTURE IN ORDER TO EVALUATE POTENTIAL CONFLICTS.
17. NEW OR RELOCATED, UNDERGROUND MAINS SHALL BE LAID TO PROVIDE THE FOLLOWING MINIMUM HORIZONTAL SEPARATIONS (OUTSIDE TO OUTSIDE):

	WATER	STORM GRAVITY	STORM FORCE	RECLAIM	SANITARY GRAVITY	SANITARY FORCE
WATER		3'	3'	3'	6', PREFERRED 10'	6', PREFERRED 10'
STORM GRAVITY	3'		3'	3'	6', PREFERRED 10'	6', PREFERRED 10'
STORM FORCE	3'	3'		3'	6', PREFERRED 10'	6', PREFERRED 10'
RECLAIM	3'	3'	3'		6', PREFERRED 10'	6', PREFERRED 10'
SANITARY GRAVITY	6', PREFERRED 10'	6', PREFERRED 10'	6', PREFERRED 10'	6', PREFERRED 10'		6', PREFERRED 10'
SANITARY FORCE	6', PREFERRED 10'	6', PREFERRED 10'	6', PREFERRED 10'	6', PREFERRED 10'	6', PREFERRED 10'	

STANDARD CONSTRUCTION DETAIL
RECLAIMED WATER DESIGN NOTES
(CONTINUED)
REV. 12/18 — FILE NAME: RW1.DWG — DETAIL REF: RW-1.1

18. NEW OR RELOCATED, UNDERGROUND MAINS SHALL BE LAID TO PROVIDE THE FOLLOWING MINIMUM CROSSING/VERTICAL SEPARATIONS (OUTSIDE TO OUTSIDE):

	WATER	STORM GRAVITY	STORM FORCE	RECLAIM	SANITARY GRAVITY	SANITARY FORCE
WATER		OVER STORM GRAVITY 6", PREFERRED 12" UNDER STORM GRAVITY 12"	OVER STORM FORCE 12" UNDER STORM FORCE 12"	OVER RECLAIM 12" UNDER RECLAIM 12"	OVER SANITARY GRAVITY 6", PREFERRED 12" UNDER SANITARY GRAVITY 12"	OVER SANITARY FORCE 12" UNDER SANITARY FORCE 12"
STORM GRAVITY	OVER WATER 12" UNDER WATER 6", PREFERRED 12"		OVER STORM FORCE 6" UNDER STORM FORCE 6"	OVER RECLAIM 6", PREFERRED 12" UNDER RECLAIM 12"	OVER SANITARY GRAVITY 6", PREFERRED 12" UNDER SANITARY GRAVITY 12"	OVER SANITARY FORCE 6", PREFERRED 12" UNDER SANITARY FORCE 12"
STORM FORCE	OVER WATER 12" UNDER WATER 12"	OVER STORM GRAVITY 6" UNDER STORM GRAVITY 6"		OVER RECLAIM 12" UNDER RECLAIM 12"	OVER SANITARY GRAVITY 12" UNDER SANITARY GRAVITY 12"	OVER SANITARY FORCE 12" UNDER SANITARY FORCE 12"
RECLAIM	OVER WATER 12" UNDER WATER 12"	OVER STORM GRAVITY 12" UNDER STORM GRAVITY 6", PREFERRED 12"	OVER STORM FORCE 12" UNDER STORM FORCE 12"		OVER SANITARY GRAVITY 12" UNDER SANITARY GRAVITY 12"	OVER SANITARY FORCE 12" UNDER SANITARY FORCE 12"
SANITARY GRAVITY	OVER WATER 12" UNDER WATER 6", PREFERRED 12"	OVER STROM GRAVITY 12" UNDER STORM GRAVITY 6", PREFERRED 12"	OVER STORM FORCE 12" UNDER STORM FORCE 12"	OVER RECLAIM 12" UNDER RECLAIM 12"		OVER SANITARY FORCE 12" UNDER SANITARY FORCE 12"
SANITARY FORCE	OVER WATER 12" UNDER WATER 12"	OVER STORM GRAVITY 12" UNDER STORM GRAVITY 6", PREFERRED 12"	OVER STORM FORCE 12" UNDER STORM FORCE 12"	OVER RECLAIM 12" UNDER RECLAIM 12"	OVER SANITARY GRAVITY 12" UNDER SANITARY GRAVITY 12"	

STANDARD CONSTRUCTION DETAIL
RECLAIMED WATER DESIGN NOTES
(CONTINUED)
REV. 12/18 — FILE NAME: RW1.DWG — DETAIL REF: RW-1.2

1. THE CITY'S PUBLIC UTILITIES DEPARTMENT (386) 506–5750 SHALL BE GIVEN A MINIMUM OF 2 BUSINESS DAYS ADVANCE NOTICE (NOT INCLUDING HOLIDAYS OR WEEKENDS) PRIOR TO BEGINNING ANY RECLAIM WATER SYSTEM CONSTRUCTION.
2. ALL WORK PERFORMED ON THE RECLAIM WATER FACILITIES OWNED OR PROPOSED TO BE OWNED BY THE CITY SHALL BE CONSTRUCTED BY A STATE CERTIFIED UNDERGROUND UTILITY CONTRACTOR OR GENERAL CONTRACTOR LICENSED IN THE STATE OF FLORIDA AND REGISTERED WITH THE CITY.
3. NEWLY CONSTRUCTED RECLAIM WATER SYSTEM EXTENSIONS MAY NOT BE USED PRIOR TO FINAL TESTING, CLEARANCE AND ACCEPTANCE BY THE CITY OF PORT ORANGE.
4. ALL TAPPING OF MAINS SHALL BE PERFORMED BY THE CITY AND BILLED IN ACCORDANCE WITH THE ADOPTED FEE RESOLUTION. SCHEDULING OF THESE CONNECTIONS OR TAPPINGS SHALL REQUIRE A MINIMUM OF 2 BUSINESS DAYS, DIRECTED TO THE CITY'S DESIGNATED SITE INSPECTOR WHO SHALL COORDINATE THE WORK DIRECTLY WITH THE PUBLIC UTILITIES DEPARTMENT. SUBSEQUENTLY, THE CONNECTION SHALL BE SCHEDULED TO COMMENCE BETWEEN 8:00 A.M. AND NOON ON THE APPROPRIATE DAY.
5. CONTRACTOR SHALL PREPARE A SAFE, SECURE AND DRY EXCAVATION FOR THE TAPPING OF MAINS BY THE CITY. THE BOTTOM OF THE EXCAVATION SHALL HAVE A MINIMUM OF 6" THICK BEDDING OF #57 STONE. ALL EXCAVATIONS GREATER THAN 5 FEET IN DEPTH SHALL COMPLY WITH THE TRENCH SAFETY ACT.
6. ALL METERS SHALL BE PROVIDED BY THE CITY IN ACCORDANCE WITH THE ADOPTED FEE RESOLUTION. METERS AND VAULTS FOR METERS 2" OR LESS WILL BE PROVIDED AND INSTALLED BY THE CITY. METERS 4" OR GREATER WILL BE PROVIDED BY THE CITY AND INSTALLED BY THE OWNER/DEVELOPER/CONTRACTOR. ALL UNDERGROUND VAULTS FOR METERS 4" OR GREATER WILL BE PROVIDED AND INSTALLED BY THE OWNER/DEVELOPER/CONTRACTOR. NOTE: LARGE COMMERCIAL RECLAIMED WATER METERS GREATER THAN 4" TAKE A MINIMUM OF 6 WEEKS FOR DELIVERY AFTER FEES ARE PAID TO THE CITY.
7. DEWATERING SHALL BE PROVIDED TO KEEP GROUNDWATER ELEVATION A MINIMUM OF 6 INCHES BELOW WATER MAIN BEING LAID.
8. ALL RECLAIM WATER MAINS SHALL BE LAID ON A FIRM FOUNDATION WITH ALL UNSUITABLE MATERIAL (MUCK, ROCK, COQUINA, ETC.) REMOVED AND REPLACED WITH CLEAN GRANULAR MATERIAL.
9. TRENCHES SHALL BE BACKFILLED WITH MATERIAL ACCEPTABLE TO THE CITY WITH A MINIMUM COMPACTION OF 98% IN PAVED AREAS AND 95% IN UNPAVED AREAS IN ACCORDANCE WITH AASHTO T–180.
10. IT SHALL BE THE CONTRACTORS RESPONSIBILITY TO ENSURE THAT TRENCH COMPACTION TESTS BE PROVIDED AT POINTS 1' ABOVE THE PIPE AND AT 1' VERTICAL INTERVALS TO FINISH GRADE, AT A MINIMUM SPACING OF EVERY 300'.
11. ALL PVC PIPE SHALL BE STORED IN SUCH A WAY AS TO PREVENT WARPING, DEFLECTION, OR ANY DEFORMATION.
12. NO USED, RE–USED, RUSTED, SECOND HAND, OR ANY MATERIAL THAT IS NOT NEW SHALL BE USED IN ANY UTILITY IMPROVEMENT PROJECTS WITHIN THE CITY'S SERVICE AREA.
13. ALL RECLAIM WATER MAINS SHALL USE A THRUST RESTRAINT JOINT METHOD IN COMPLIANCE WITH THE DUCTILE IRON PIPE RESEARCH ASSOCIATION (DIPRA) GUIDELINES. IN THE EVENT THAT PVC PIPE IS SPECIFIED, THE RESTRAINT JOINT SHALL BE MODIFIED IN ACCORDANCE WITH THE RECOMMENDED ADDITIONAL RESTRAINT LENGTH REQUIRED FOR PIPE WRAPPED WITH POLYETHYLENE.
14. ALL RECLAIM WATER SERVICE ENDINGS SHALL BE MARKED WITH A 2" X 4" LUMBER (PRESSURE TREATED) EXTENDING 4' ABOVE GRADE, WITH WATER SERVICES SECURED 12" MAXIMUM ABOVE THE GROUND. ALL SERVICES SHALL BE LOCKED AT THE TIME OF FINAL INSPECTION BY THE CONTRACTOR IN THE PRESENCE OF THE CITY INSPECTOR OR CITY PERSONNELL, AFTER THEY HAVE BEEN INSPECTED AND VERIFIED TO OPERATE PROPERLY.

STANDARD CONSTRUCTION DETAIL
RECLAIMED WATER DESIGN NOTES
(CONTINUED)
REV. 12/18 — FILE NAME: RW1.DWG — DETAIL REF: RW-2

15. ALL RECLAIM WATER VALVES SHALL BE ADJUSTED TO FINISHED GRADE AND THE CAPS PAINTED PURPLE TO MAKE THEM PLAINLY VISIBLE. ALL RECLAIMED WATER MAINS AND SERVICE LINES SHALL BE READILY DISTINGUISHABLE BY THEIR PURPLE COLOR OR TAPE MARKINGS. DUCTILE IRON PIPE SHALL BE WRAPPED WITH PURPLE POLYETHYLENE.
16. RECLAIM WATER SYSTEMS SHALL BE PRESSURE TESTED AT 150 PSI STATIC PRESSURE FOR A PERIOD OF 2 HOURS PER AWWA STANDARDS.
17. THE CONTRACTOR SHALL BE REQUIRED TO PIG ALL RECLAIM WATER MAINS 6" AND LARGER IN DIAMETER AND PRIMARY DISTRIBUTION MAINS LOCATED ON COLLECTOR AND ARTERIAL ROADWAYS. ALL PIGS SHALL BE NEW. NO FOAM PIGS ARE ALLOWED. LAUNCHING AND EXTRACTION POINTS SHALL BE DETERMINED BY THE CONTRACTOR. ALL PIGGING OPERATIONS SHALL BE WITNESSED BY A PUBLIC UTILITIES REPRESENTATIVE OR A CITY UTILITY INSPECTOR
18. UPON CONSTRUCTION COMPLETION AND ACCEPTANCE OF THE SYSTEM, IT SHALL BE THE DESIGN ENGINEER'S RESPONSIBILITY TO ENSURE THAT THE SYSTEM IS PROPERLY CERTIFIED AND ACCEPTED BY THE CITY OF PORT ORANGE PUBLIC UTILITIES AND "AS–BUILTS" ARE PROVIDED TO THE CITY PRIOR TO ANY PUBLIC USE OF THIS SYSTEM.
19. UPON FINAL ACCEPTANCE OF NEW WATER SYSTEMS, WATER VALVES SHALL BE COMPLETELY OPENED BY PUBLIC UTILITIES PERSONNEL. AT NO TIME SHALL CONTRACTOR OPERATE ANY EXISTING VALVES.
20. ALL FIRE HYDRANTS SHALL BE CONSTRUCTED TO MAKE THEM EASILY ACCESSIBLE TO FIRE PERSONNEL IN CASE OF A FIRE. THE PRIMARY HYDRANT PORT SHOULD ALWAYS FACE THE STREET.
21. ALL RECLAIMED WATER SERVICES SHALL BE MARKED ALONG THE OUTSIDE EDGE OF CURB WITH AN "_|_" OR BY METAL TABS SET INTO PAVEMENT.
22. ALL RECLAIM VALVES AND BLOW–OFFS SHALL BE MARKED BY AN "X" SET INTO THE PAVEMENT. REVERSE TAPPING VALVE SHALL BE MARKED WITH AN "X ↑" SAW CUT INTO THE CURB OR PAVEMENT WITH THE ARROW POINTING TO THE DIRECTION OF PRESSURE MAIN RUN.
23. RECLAIMED WATER HYDRANTS MAY BE REQUIRED BY THE CITY. ALL RECLAIMED HYDRANTS SHALL BE PAINTED PURPLE.
24. THE CITY RESERVES THE RIGHT TO REQUIRE TIE–IN CONNECTIONS TO BE PERFORMED DURING PERIODS OF LOW FLOW (MIDNIGHT TO 6:00 A.M.) IN ORDER TO MINIMIZE SERVICE DISRUPTION TO EXISTING CUSTOMERS. THE INSTALLATION OF LINE STOPPING DEVICES ON PRESSURE MAIN (RECLAIM WATER, RECLAIM WATER AND SANITARY FORCE MAINS) MAY BE REQUIRED ON ANY REQUESTED UTILITY OUTAGE AT THE DISCRETION OF PUBLIC UTILITIES DEPARTMENT TO MINIMIZE INTERRUPTION TO EXISTING UTILITY CUSTOMERS.

STANDARD CONSTRUCTION DETAIL
RECLAIMED WATER DESIGN NOTES
(CONTINUED)
REV. 12/18 — FILE NAME: RW1.DWG — DETAIL REF: RW-2.1

AIR RELEASE VALVES

MANUFACTURER	MODEL #
VENT-O-MAT	RBX 2521

GATE VALVES AND TAPPING VALVES –RESILIENT SEATED (AWWA C509 AND C515)
24"OR SMALLER (VALVE WEDGE TO BE COMPLETE ENCLOSED WITH EPDM RUBBER)

MANUFACTURER	MODEL #
AMERICAN AVK CO.	SERIES 3, 18, 25, 45, 55, & 66
CLOW	MODEL 2638 AND 2639
MUELLER	A-2360, A-2361, T-2360 & T-2361
AMERICAN FLOW CONTROL	SERIES 2500

JOINTS RESTRAINED –DIP AND PVC

MANUFACTURER	MODEL #
EBBA IRON INC	SERIES 1100/1500/1600 2000/2500/2800
STAR PIPE	STARGRIP SERIES 1000/1100/1200/3000/ 4000
SIGMA	ONE-LOCK SLD & ONE-LOCK SLC & PV-LOCK FOR PVC
SMITH-BLAIR	CAM-LOCK (111 & 120) & BELL-LOCK (115 & 165)

STANDARD CONSTRUCTION DETAIL
RECLAIMED WATER APPROVED PRODUCTS
(CONTINUED)
REV. 12/18 — FILE NAME: RW1.DWG — DETAIL REF: RW-3

POLYETHYLENE TUBING –(PURPLE WITH UV PROTECTION (SDR-9) 1"TO 2"ONLY)

MANUFACTURER	MODEL #
ENDOT ENDOCORE RWT	ENDOTRACE WITH #10 COPPERHEAD TRACER WIRE

CORPORATION STOP 1"

MANUFACTURER	MODEL #
FORD	F-1100-4

CORPORATION STOP 1 ½"

MANUFACTURER	MODEL #
FORD	FB-1100-6

CURB STOP –STRAIGHT BALL METER VALVE W/ BARREL LOCKS

MANUFACTURER	MODEL #
FORD	B-94-324W (SINGLE SERVICE) B-91-223W (DOUBLE SERVICE)
FORD	BF 43-777W (FOR 2"METER)

"U"BRANCH (1 ½"X ¾")

MANUFACTURER	MODEL #
FORD	U-48-63-7.5

STANDARD CONSTRUCTION DETAIL
RECLAIMED WATER APPROVED PRODUCTS
(CONTINUED)
REV. 12/18 — FILE NAME: RW1.DWG — DETAIL REF: RW-3.1

NO.	DATE	DESCRIPTION	BY
2	7/8/24	REVISED PER CITY COMMENTS	BVB
1	5/16/24	REVISED PER CITY COMMENTS	JD

REVISIONS

PARKER MYNCHENBERG & ASSOCIATES, INC.
PROFESSIONAL ENGINEERS * LANDSCAPE ARCHITECTS
1729 RIDGEWOOD AVENUE HOLLY HILL, FLORIDA 32117
(386) 677–6891 FAX (386) 677–2114 E–MAIL: info@parkermynchenberg.com
PARKER MYNCHENBERG P.E. #32645 R.L.A. #0001553,
STEVE BUSWELL P.E. #53985 R.L.A. #LA6667011
KEVIN A. LEE P.E. #71501
CERTIFICATE OF AUTHORIZATION NUMBER 00003910

CITY OF PORT ORANGE
FORESTRY DEPARTMENT BUILDING
PORT ORANGE * FLORIDA

REUSE DETAILS

7
SHEET NO.

File No.
Drawn By: BVB
Date: 10/25/2023
SCALE: NONE

SEAL

Z:\Port Orange Forestry Dept Building - 23---\DRAWINGS\0000DET.dwg, 7/8/2024 9:14:37 AM, PM, DWG To PDF.pc3, ARCH full bleed D (36.00 x 24.00 Inches), 1:1

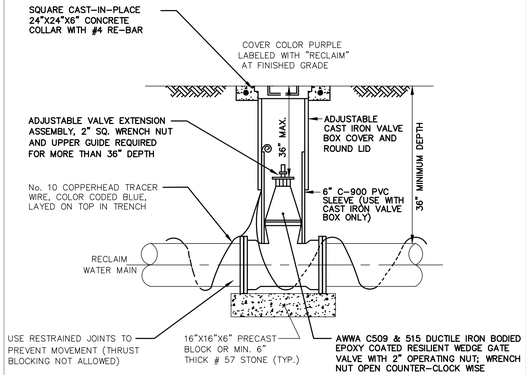

NOTE:

1. **BOLT VALVES TO TEE OR CROSS WHEREVER AND WHENEVER APPLICABLE.**
2. **GATE VALVE WEDGE SHALL BE COMPLETELY ENCAPSULATED WITH EPDM RUBBER.**
3. ALL OUTSIDE HEX NUTS, BOLTS AND HARDWARES (EXCEPT MECHANICAL BOLTS SUCH AS "T" BOLTS) SHALL BE MINIMUM 316 STAINLESS STEEL GRADE.

STANDARD CONSTRUCTION DETAIL
4"–16" VALVE SIZE RECLAIMED WATER SERVICE VALVE BOX
REV. 12/18

FILE NAME: RW7.DWG
DETAIL REF: RW-7

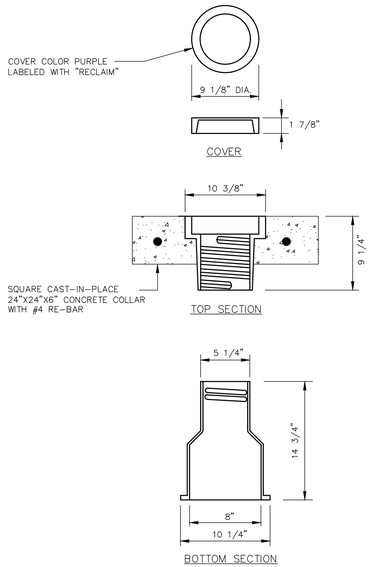

STANDARD CONSTRUCTION DETAIL
RECLAIMED WATER VALVE BOX COVER AND LID
REV. 12/18

FILE NAME: RW9.DWG
DETAIL REF: RW-8

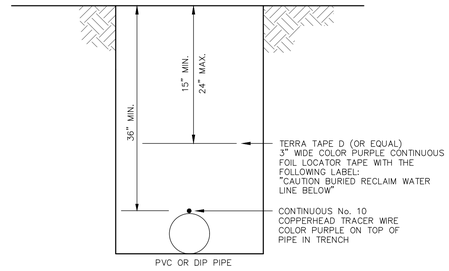

NOTE:

1. CONTINUOUS No. 10 COPPERHEAD TRACER WIRE TO BE INSTALLED WITH ALL PIPE. WIRE SHALL BE BROUGHT UP TO GRADE AT ALL VALVES.
2. ALL TRACER WIRES SHALL BE INTERCONNECTED WITH WATER-PROOF WIRE NUT CAP OR WITH SIMILAR WATER-PROOF SPLICE KIT AT ANY SPLICE AND WHERE SERVICES CONNECT TO MAINS.
3. A SUCCESSFUL CONTINUITY TEST SHALL BE CONDUCTED AND WITNESSED BY A CITY INSPECTOR AT THE COMPLETION OF TRACER WIRE INSTALLATION.

STANDARD CONSTRUCTION DETAIL
RECLAIMED WATER LOCATOR TAPE/ TRACER WIRE INSTALLATION
REV. 12/18

FILE NAME: RW10.DWG
DETAIL REF: RW-10

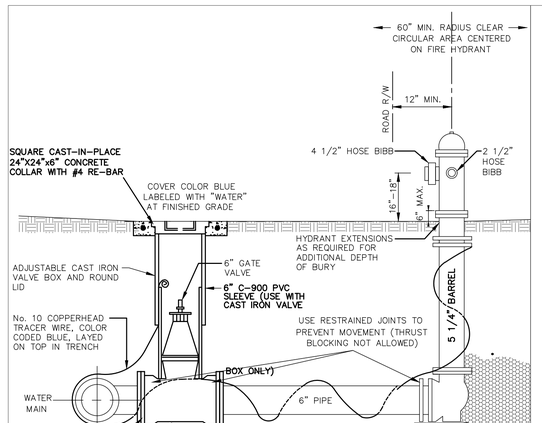

NOTES:

1. HYDRANTS SHALL BE BREAK AWAY TYPE WITH PUMPER NOZZLE FACING STREET.
1. HYDRANTS SHALL BE NON-DRAINING TYPE.
2. HYDRANTS TO BE PAINTED EMERGENCY YELLOW AT MANUFACTURE-EPOXY OR POLYURETHANE.
3. HOSE BIBBS TO BE AMERICAN STANDARD THREADS.
4. ADJUSTABLE TRENCH ADAPTOR ASSEMBLY REQUIRED FOR ALL VALVES GREATER THAN 36" DEEP.
5. INSTALL AT SIDE LOT LINES OR AT CORNERS OF ROADWAY INTERSECTIONS (TYP.).
6. ALL OUTSIDE HEX NUTS, BOLTS AND HARDWARES (EXCEPT MECHANICAL BOLTS SUCH AS "T" BOLTS) SHALL BE MINIMUM 316 STAINLESS STEEL GRADE.
7. THE INTERNAL UPPER AND LOWER STEM SHALL BE MINIMUM 304 STAINLESS STEEL GRADE.

STANDARD CONSTRUCTION DETAIL
FIRE HYDRANT ASSEMBLY
REV. 12/18

FILE NAME: W20.DWG
DETAIL REF: W-20

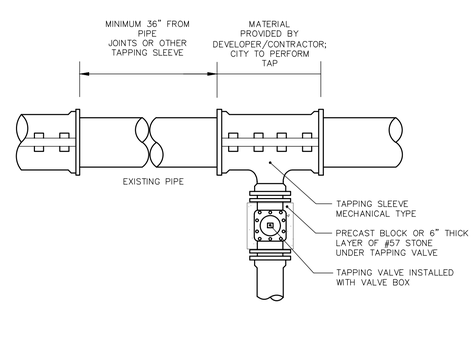

NOTES:

1. TAPPING OF MAINS SHALL BE PERFORMED BY THE CITY AND BILLED IN ACCORDANCE WITH THE ADOPTED FEE RESOLUTION. ALL MATERIALS TO BE PROVIDED BY DEVELOPER/CONTRACTOR.
2. EXCAVATIONS FOR TAPPING WORK TO BE SAFE, SECURE AND DRY, WITH 6" THICK (MIN.) LAYER OF #57 STONE AT BOTTOM.
3. CITY ALLOWS ONLY 1", 2", 4", 6", 8", 10" AND 12" TAPS.
4. REQUIRED RESTRAINED JOINTS TO BE INSTALLED – THRUST BLOCKS ARE NOT PERMITTED.
5. EPOXY COATED STEEL, STAINLESS STEEL SLEEVES WITH 316 STAINLESS STEEL BOLTS ARE PERMITTED FOR ALL TYPES OF PIPE MATERIALS.
6. ALL VALVES 2" OR GREATER SHALL BE GATE VALVES. CORPORATION STOPS ALLOWED ON BLOW-OFFS ONLY.

STANDARD CONSTRUCTION DETAIL
TAPPING VALVE AND SLEEVE
REV. 12/18

FILE NAME: W15.DWG
DETAIL REF: W-15

PARKER MYNCHENBERG & ASSOCIATES, INC.
PROFESSIONAL ENGINEERS * LANDSCAPE ARCHITECTS
1729 RIDGEWOOD AVENUE HOLLY HILL, FLORIDA 32117
(386) 677-6895 FAX (386) 677-2112 www.mynchenberg.com
PARKER MYNCHENBERG P.E. #32645 R.L.A. #0001552
STEVE BUSWELL P.E. #53965 R.L.A. #AA6667011
CERTIFICATE OF AUTHORIZATION NUMBER 00003910

NO.	DATE	DESCRIPTION	BY
2	7/8/24	REVISED PER CITY COMMENTS	BVB
1	5/16/24	REVISED PER CITY COMMENTS	JD

REVISIONS

CITY OF PORT ORANGE
FORESTRY DEPARTMENT BUILDING
PORT ORANGE * FLORIDA

REUSE DETAILS

8
SHEET NO.

File No.
Drawn By: BVB
Date: 10/25/2023
SCALE: NONE

SEAL

Z:\Port Orange Forestry Dept Building - 23-----\DRAWINGS\3000DET.dwg, 7/8/2024 9:15:14 AM, PM, DWG To PDF.pc3, ARCH full bleed D (36.00 x 24.00 Inches), 1:1

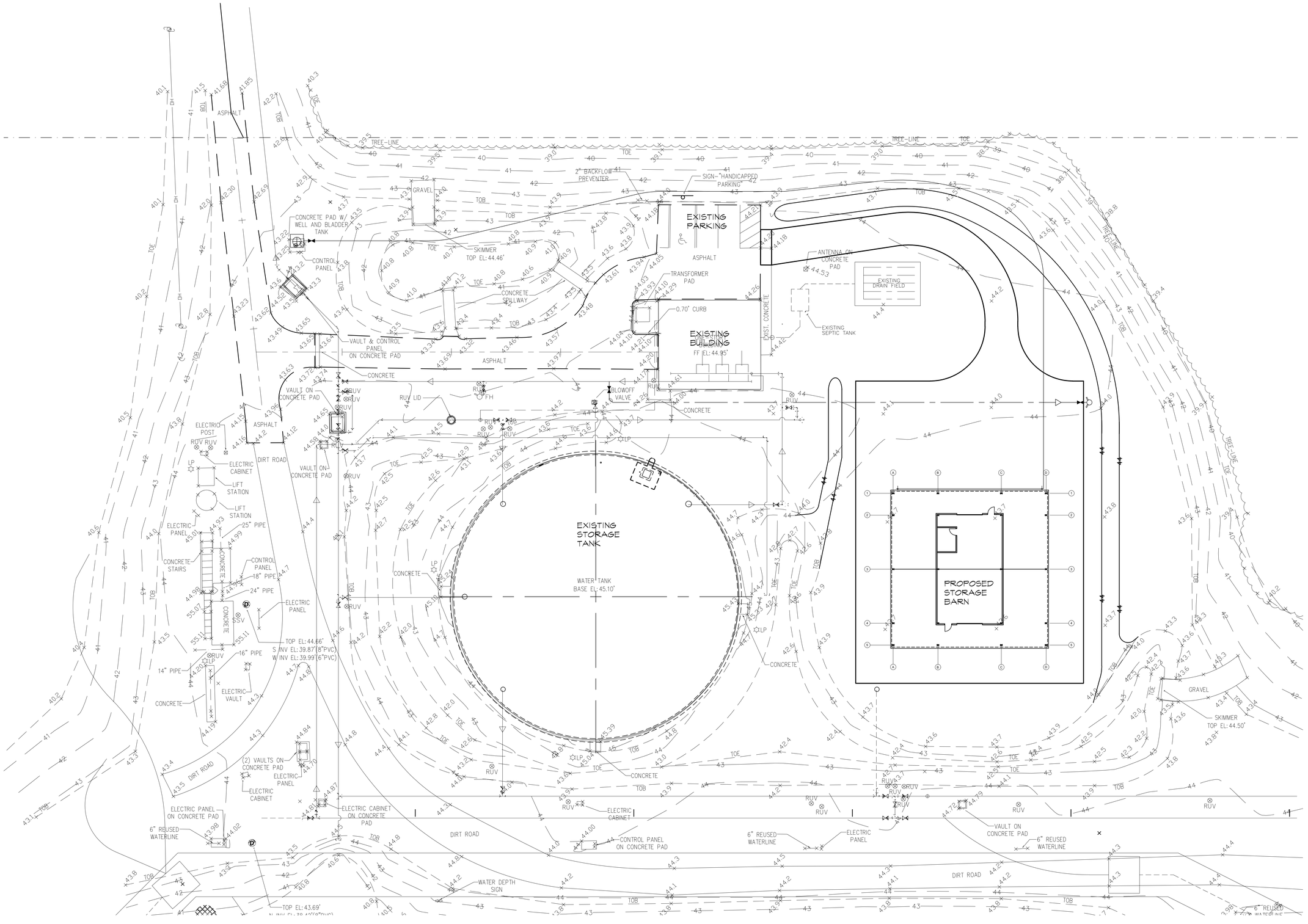

ARCHITECTURAL SITE PLAN

SCALE : 1" = 20'

N

HALL & OGLE ARCHITECTS, INC.
208 MAGNOLIA AVENUE
DAYTONA BEACH, FLORIDA 32114
www.hoarchitects.com
PH (386) 255-6163
FAX (386)257-5650
AA-C000925

REVISIONS

NO.	DATE	DESCRIPTION

FORESTRY MANAGEMENT STORAGE BARN CITY OF PORT ORANGE

4655 CITY CENTER CIRCLE
PORT ORANGE, FL

ARCH/ENGR OF RECORD
JOHN E. HALL AR0010727
DAVID D. OGLE AR93986

DESIGNED BY	DRAWN BY
DO	JB
ISSUE DATE	AE PROJECT NUMBER
18-JUNE-2024	2315

SHEET TITLE
ARCHITECTURAL SITE PLAN

DRAWING NO.
A100

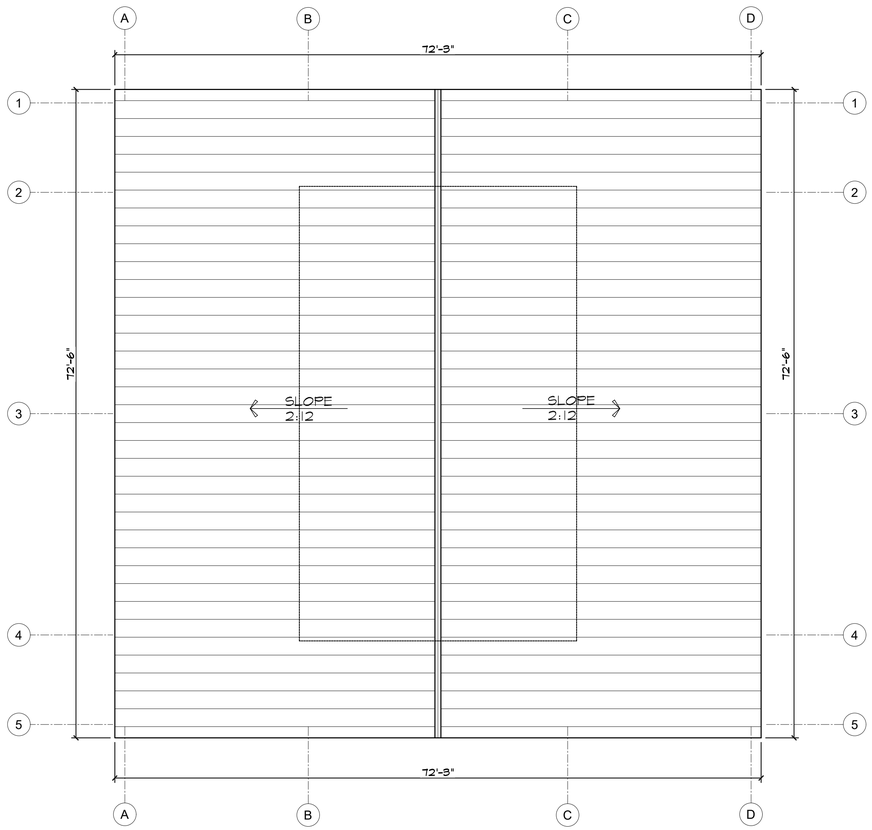

ROOF PLAN

SCALE: ⅛"= 1'-0"

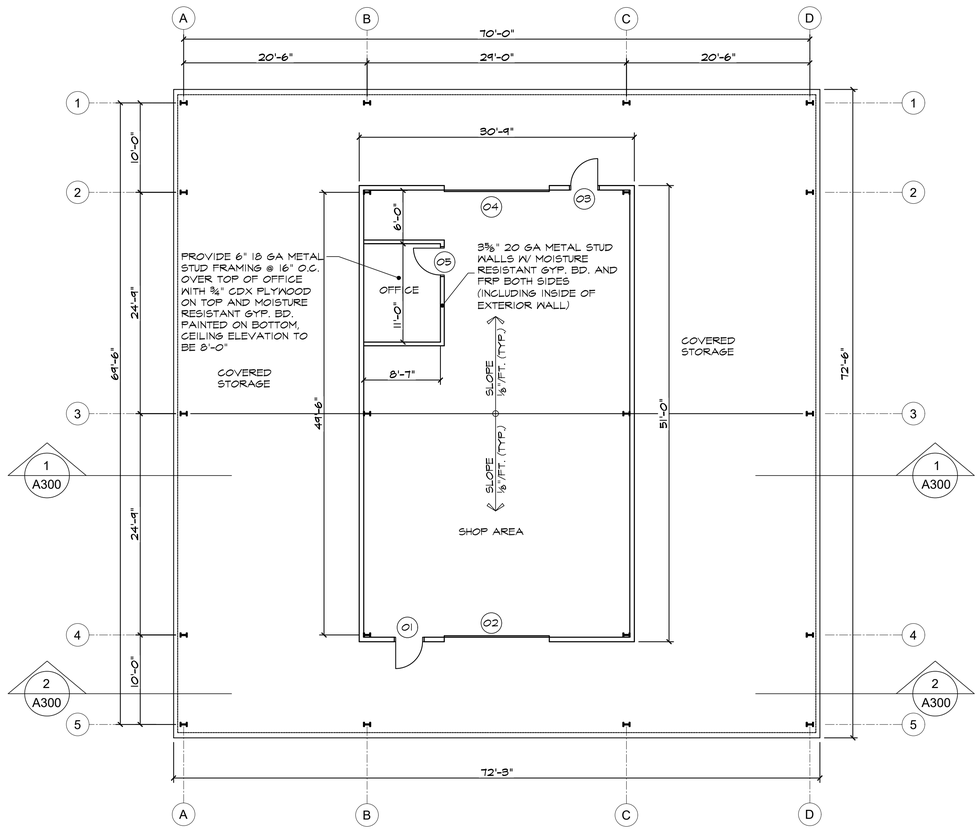

FLOOR PLAN

SCALE: ⅛"= 1'-0"

HALL & OGLE
ARCHITECTS, INC.
208 MAGNOLIA AVENUE
DAYTONA BEACH, FLORIDA 32114
www.hoarchitects.com
PH (386) 255-6163
FAX (386)257-5650
AA-C000925

REVISIONS

NO.	DATE	DESCRIPTION

DOCUMENT HISTORY

FORESTRY MANAGEMENT STORAGE BARN
CITY OF PORT ORANGE

4655 CITY CENTER CIRCLE
PORT ORANGE, FL

ARCH/ENGR OF RECORD
JOHN E. HALL AR0010727
DAVID D. OGLE AR93986

DESIGNED BY	DRAWN BY
DO	JB
ISSUE DATE	AE PROJECT NUMBER
18-JUNE-2024	2315

SHEET TITLE
FLOOR PLAN / ROOF PLAN

DRAWING NO.
A101

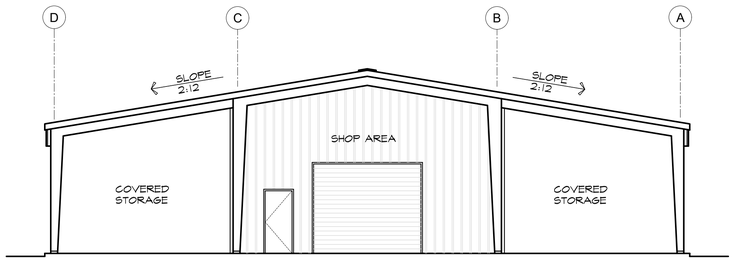

NORTH ELEVATION

SCALE: ⅛"= 1'-0"

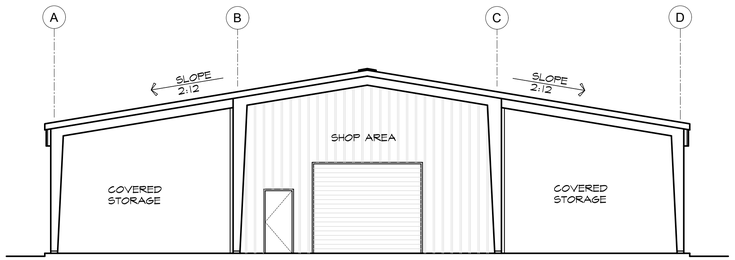

SOUTH ELEVATION

SCALE: ⅛"= 1'-0"

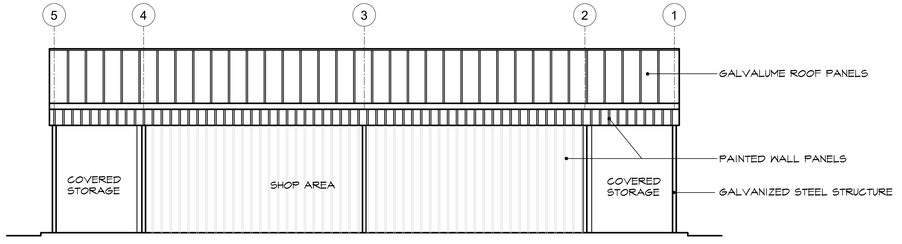

EAST ELEVATION

SCALE: ⅛"= 1'-0"

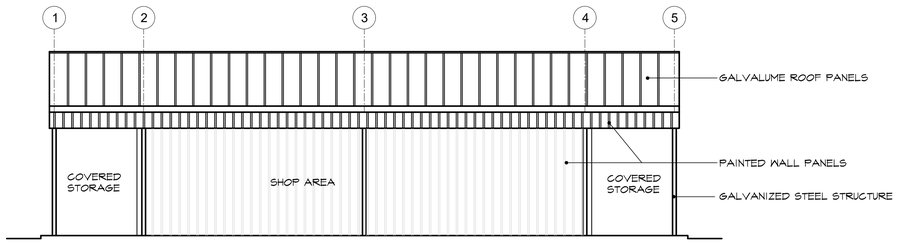

WEST ELEVATION

SCALE: ⅛"= 1'-0"

HALL & OGLE ARCHITECTS, INC.
208 MAGNOLIA AVENUE
DAYTONA BEACH, FLORIDA 32114
www.hoarchitects.com
PH (386) 255-6163
FAX (386)257-5650
AA-C000925

REVISIONS

NO.	DATE	DESCRIPTION

DOCUMENT HISTORY

FORESTRY MANAGEMENT STORAGE BARN
CITY OF PORT ORANGE

4655 CITY CENTER CIRCLE
PORT ORANGE, FL

ARCH/ENGR OF RECORD
JOHN E. HALL AR0010727
DAVID D. OGLE AR93986

DESIGNED BY	DRAWN BY
DO	JB
ISSUE DATE	AE PROJECT NUMBER
18-JUNE-2024	2315

SHEET TITLE
BUILDING ELEVATIONS

DRAWING NO.
A300

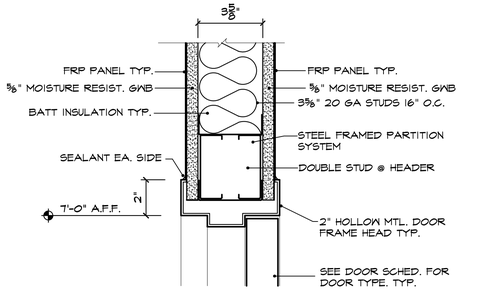

1 HEAD DETAIL

SCALE: 3" = 1'-0"

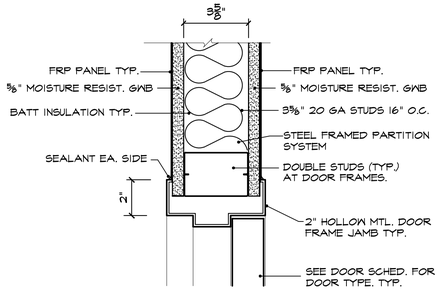

2 JAMB DETAIL

SCALE: 3" = 1'-0"

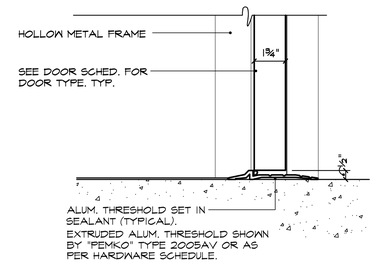

3 TYP. SILL DETAIL

SCALE: 3" = 1'-0"

DOOR SCHEDULE

DOOR NO.	DOOR TYPE	SIZES WIDTH	SIZES HEIGHT	SIZES THICKNESS	MATERIAL ① HOLLOW METAL	MATERIAL ② OVERHEAD DOOR	GLASS NONE	GLASS 1/4" TEMPERED GLASS	FRAME TYPE	FRAME DETAILS ① HOLLOW METAL	FRAME DETAILS ② OVERHEAD DOOR	FRAME DETAILS HEAD	FRAME DETAILS JAMB	FRAME DETAILS SILL	HARDWARE SET NO.	REMARKS
1	DE-1	3'-0"	7'-0"	1¾"	1			1	HM-1	1				3		1
2	OH-1	12'-0"	10'-0"		2						2	6	7	8		
3	DE-1	3'-0"	7'-0"	1¾"	1			1	HM-1	1				3		1
4	OH-1	12'-0"	10'-0"		2						2	6	7	8		
5	D1-1	3'-0"	7'-0"	1¾"	1			2	HM-1	1		1	2	3		

REMARKS:
1. EXTERIOR PERSONNEL DOORS BY METAL BUILDING MANUFACTURER

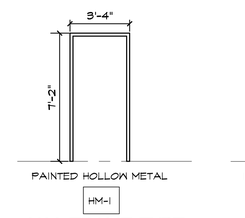

H.M. FRAME TYPE

SC: 1/4" = 1'-0"

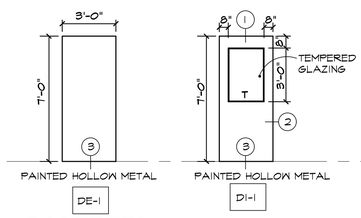

DOOR TYPES

SC: 1/4" = 1'-0"

NOTES:
1. PROVIDE DOOR LEVER HARDWARE AT 34" ABOVE FINISH FLOOR.
2. PAINT STOPS TO MATCH DOOR TYP.

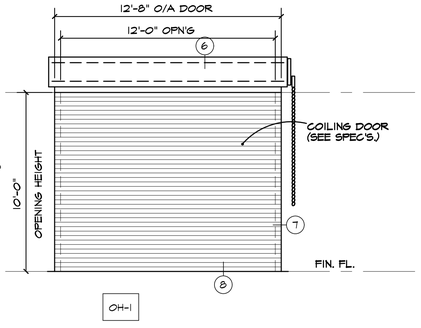

OVERHEAD COILING DOOR

SCALE : 1/4" = 1'-0"

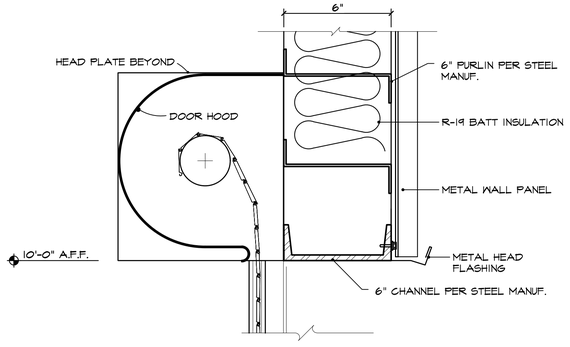

6 OH DOOR HEAD DETAIL

SCALE: 3" = 1'-0"

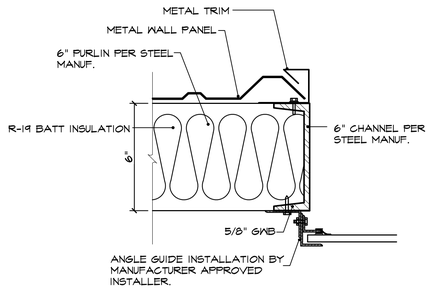

7 OH DOOR FRAME - JAMB

SCALE: 3" = 1'-0"

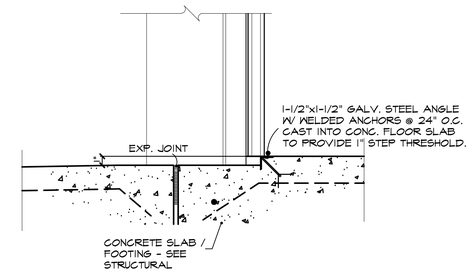

8 H/M DOOR FRAME - JAMB

SCALE: 3" = 1'-0"

HALL & OGLE ARCHITECTS, INC.
208 MAGNOLIA AVENUE
DAYTONA BEACH, FLORIDA 32114
www.hoarchitects.com
PH:(386) 255-6163
FAX:(386)257-5650
AA-C000925

REVISIONS

NO.	DATE	DESCRIPTION

DOCUMENT HISTORY

FORESTRY MANAGEMENT
STORAGE BARN
CITY OF PORT ORANGE
4655 CITY CENTER CIRCLE
PORT ORANGE, FL

ARCH/ENGR OF RECORD
JOHN E. HALL AR0010727
DAVID D. OGLE AR93986

DESIGNED BY	DRAWN BY
DO	JB
ISSUE DATE	AE PROJECT NUMBER
18-JUNE-2024	2315

SHEET TITLE
DOOR SCHEDULE/ DETAILS

DRAWING NO.
A500

SPECIAL CONDITIONS, REQUIREMENTS AND NOTES TO OWNER, DEVELOPER AND CONTRACTORS

CONTRACTOR, BUILDER AND SUBCONTRACTORS INVOLVED IN ANY FORM OF CONSTRUCTION USING THESE DOCUMENTS SHALL INFORM THE OWNER AND DEVELOPER IN WRITING PRIOR TO CONSTRUCTION OF THE FOLLOWING RESPONSIBILITIES, PERFORMANCE CRITERIA AND LIMITATIONS AND RISKS ASSOCIATED WITH CONSTRUCTION. IF THE OWNER, DEVELOPER OR CONTRACTOR IS NOT ABLE TO ACCEPT RESPONSIBILITIES OR PERFORMANCE CRITERIA AND LIMITATIONS, NOTIFY OUR OFFICE PRIOR TO START OF CONSTRUCTION. IT SHALL BE EXPRESSLY UNDERSTOOD THAT THE ENGINEER IS NOT RESPONSIBLE OR LIABLE FOR THE LACK OF PERFORMANCE OF MATERIALS, SYSTEMS OR DESIGNS NOT BEING LIMITED TO ITEMS OUTLINED BELOW. CONTRACTORS AND SUBCONTRACTORS SHALL THOROUGHLY REVIEW ALL CONDITIONS AND RESPONSIBILITIES STATED IN THESE NOTES, GENERAL STRUCTURAL NOTES, PLANS, SECTIONS AND DETAILS AND SHALL NOTIFY THE ENGINEER AND OWNER IN WRITING PRIOR TO CONSTRUCTION OF ANY CONDITIONS OR RESPONSIBILITIES WHICH ARE NOT ACCEPTABLE OR NOT UNDERSTOOD.

1. DUE TO MOISTURE VARIATIONS AS A RESULT OF AMBIENT CONDITIONS AND MATERIAL CONDITIONS AT TIME OF CONSTRUCTION, WOOD MEMBERS ARE SUSCEPTIBLE TO VOLUME AND SHAPE CHANGES AND DIMENSIONAL VARIATIONS. SPANNING MEMBERS MAY ALSO DEFLECT VERTICALLY OR LATERALLY. SHEATHING, DRYWALL OR ARCHITECTURAL SURFACES SUPPORTED BY WOOD MEMBERS MAY DISTORT, CRACK AND BULGE DUE TO THESE FACTORS.

2. PLAIN CONCRETE, REINFORCED CONCRETE OR CONCRETE MASONRY DEVELOP CRACKS. THE CRACKS ARE DUE TO INHERENT SHRINKAGE, CREEP AND RESTRAINING EFFECTS. CRACKS ARE NORMALLY COSMETIC AND THE SYSTEM MAINTAINS SERVICEABILITY AND STRENGTH REQUIREMENTS. JOINTS MAY BE INDICATED TO CONTROL CRACKING, BUT ARE NOT MEANT TO ELIMINATE ALL CRACKING, AS THIS IS NOT PRACTICAL. THE CONTRACTOR SHALL USE ALL STANDARD MEANS TO INSURE PROPER PROTECTION AND CURING OF CEMENTIOUS MATERIALS TO REDUCE CRACKING. SURFACE SPALLING OR EXTREME CRACKING MAY BE CAUSED BY POOR MATERIAL OR PLACEMENT. CONTACT OUR OFFICE FOR POSSIBLE REPAIR REQUIREMENTS.

3. FOUNDATIONS HAVE BEEN DESIGNED WITHOUT A SOIL INVESTIGATION OR RECOMMENDATIONS FROM A GEOTECHNICAL CONSULTANT. FOUNDATIONS ARE TO BEAR ON STABLE SOILS COMPETENT IN SUSTAINING LOADS STATED IN THE FOUNDATION NOTES BELOW WITHOUT EXCESSIVE SETTLEMENT OR HEAVE. BE ADVISED THAT FOUNDATION MOVEMENT MAY OCCUR AND THAT DESIGNS CONTAINED HEREIN DO NOT ATTEMPT TO MITIGATE SOIL CONDITIONS. STRUCTURES MAY BE AT RISK OF DAMAGE WHERE STABLE SOILS ARE NOT PRESENT. ATTENTION TO PROPER SOIL PREPARATION, GRADING AS WELL AS PROPER DRAINAGE AWAY FROM STRUCTURE, IS ESSENTIAL IN REDUCING SOIL MOVEMENT.

4. VARIATION IN DIMENSIONS MAY OCCUR AS A RESULT OF THERMAL INFLUENCES, NATURAL DEFLECTIONS AND/OR CAMBERS OF MEMBERS. AS A RESULT, QUANTITIES MAY VARY AND ARCHITECTURAL FINISHES MAY BE AT RISK OF COSMETIC VARIATION OR DAMAGE. MAXIMUM FLOOR AND ROOF DEFLECTIONS FOR THIS PROJECT ARE ESTIMATED AT 0.375 INCHES.

5. THE ENGINEER SHALL NOT BE RESPONSIBLE FOR VARIATIONS TO PLANS BETWEEN BID PROCESS AND FINALIZED APPROVED DOCUMENTS RELEASED FOR CONSTRUCTION. ADDITIONS AND ALTERATIONS MAY BE MADE BETWEEN RELEASE OF BID DOCUMENTS AND FINALIZED CONSTRUCTION DOCUMENTS.

6. DESIGNS HAVE BEEN COMPLETED USING THE CODE STATED IN THE BASIS FOR DESIGN. OTHER SPECIALIZED CODES OR DIRECTIVES (HUD, OSHA, ASSHTO, ETC.) ARE NOT USED IN THE PREPARATION OF THESE DOCUMENTS AND ARE NOT REFERENCED.

7. THESE DRAWINGS HAVE BEEN PREPARED USING STANDARDS OF PROFESSIONAL CARE AND COMPLETENESS NORMALLY EXERCISED UNDER SIMILAR CIRCUMSTANCES BY REPUTABLE STRUCTURAL ENGINEERS IN THIS OR SIMILAR LOCALITIES. THEY NECESSARILY ASSUME THAT THE WORK DEPICTED WILL BE PERFORMED BY AN EXPERIENCED CONTRACTOR, SUBCONTRACTOR AND/OR WORKPERSONS WHO HAVE A WORKING KNOWLEDGE OF THE APPLICABLE CODE STANDARDS AND REQUIREMENTS AND OF INDUSTRY ACCEPTED STANDARD GOOD PRACTICE. AS NOT EVERY CONDITION OR ELEMENT IS (OR CAN BE) EXPLICITLY SHOWN ON THESE DRAWINGS, IT IS UNDERSTOOD THAT THE CONTRACTOR WILL USE INDUSTRY ACCEPTED STANDARD GOOD PRACTICE FOR ALL WORK NOT EXPLICITLY SHOWN.

8. CALCULATION AND DESIGN OF MISCELLANEOUS NON-STRUCTURAL ITEMS, SUCH AS STAIRS, RAILINGS, NON-STRUCTURAL WALLS AND PREFABRICATED STRUCTURAL ITEMS, SUCH AS FLOOR AND ROOF TRUSSES, ARE NOT INCLUDED AND IS TO BE PROVIDED BY OTHERS UNLESS SPECIFICALLY NOTED ON THESE DRAWINGS.

9. THESE DRAWINGS REPRESENT THE FINISHED STRUCTURE. THEY DO NOT INDICATE THE METHOD OF CONSTRUCTION. THE CONTRACTOR SHALL BE SOLELY RESPONSIBLE FOR CONSTRUCTION MEANS, METHODS, TECHNIQUES, SEQUENCES AND PROCEDURES. IT SHALL BE THE CONTRACTOR'S RESPONSIBILITY TO DESIGN AND PROVIDE ADEQUATE SHORING, BRACING, FORMWORK, ETC. AS REQUIRED FOR THE PROTECTION OF LIFE AND PROPERTY DURING CONSTRUCTION. CONSTRUCTION MATERIALS SHALL BE UNIFORMLY SPREAD OUT SUCH THAT DESIGN LIVE LOAD PER SQUARE FOOT AS STATED HEREIN IS NOT EXCEEDED. VISITS TO THE SITE BY THE STRUCTURAL ENGINEER SHALL NOT INCLUDE INSPECTION OF THE ABOVE ITEMS.

10. THE CONTRACTOR SHALL BE RESPONSIBLE FOR ALL EXCAVATION PROCEDURES INCLUDING SHORING AND PROTECTION OF ADJACENT PROPERTY, STRUCTURES, STREETS AND UTILITIES IN ACCORDANCE WITH THE LOCAL BUILDING DEPARTMENT. ALL WORK OR CONSTRUCTION SHALL COMPLY WITH ALL APPLICABLE BUILDING CODES, REGULATIONS AND SAFETY REQUIREMENTS.

11. THE CONTRACTOR SHALL BE RESPONSIBLE FOR VERIFICATION OF ALL DIMENSIONS, CONDITIONS AND ELEVATIONS WITH ARCHITECTURAL DRAWINGS PRIOR TO START OF CONSTRUCTION. THE CONTRACTOR SHALL INFORM THE ARCHITECT IN WRITING OF ANY DISCREPANCIES OR OMISSIONS NOTED ON THE DRAWINGS. ANY SUCH DISCREPANCY, OMISSION, OR VARIATION NOT REPORTED BEFORE START OF CONSTRUCTION SHALL BE THE RESPONSIBILITY OF THE CONTRACTOR.

12. WHERE REFERENCE IS MADE TO VARIOUS TEST STANDARDS FOR MATERIALS, SUCH STANDARDS SHALL BE THE LATEST EDITION AND/OR ADDENDA. THE CODE OF STANDARDS AND PRACTICES SHALL BE ADHERED TO FOR ALL STRUCTURAL STEEL.

13. OPTIONS ARE FOR CONTRACTOR'S CONVENIENCE. IF AN OPTION IS USED, THE CONTRACTOR SHALL BE RESPONSIBLE FOR ALL NECESSARY CHANGES AND SHALL COORDINATE ALL DETAILS.

14. TYPICAL DETAILS AND NOTES SHALL APPLY, THOUGH NOT NECESSARILY INDICATED AT A SPECIFIC LOCATION ON PLANS. WHERE NO DETAILS ARE SHOWN, CONSTRUCTION SHALL CONFORM TO SIMILAR WORK ON THE PROJECT. DETAILS MAY SHOW ONLY ONE SIDE OF CONNECTION OR MAY OMIT INFORMATION FOR CLARITY. WHERE DISCREPANCIES OCCUR IN THESE DRAWINGS, NOTES AND DETAILS ON DRAWINGS SHALL TAKE PRECEDENCE OVER GENERAL STRUCTURAL NOTES AND TYPICAL DETAILS. SOME DETAILS NOTED ON THE TYPICAL DETAIL SHEETS MAY NOT BE APPLICABLE TO THIS SPECIFIC PROJECT AND ARE ONLY FOR INFORMATION. CONTACT STRUCTURAL ENGINEER FOR FURTHER INFORMATION REGARDING THESE DETAILS.

15. ALL OPENINGS ARE NOT SHOWN ON THESE DRAWINGS. ESTABLISH AND VERIFY ALL OPENINGS AND INSERTS FOR ARCHITECTURAL, MECHANICAL, PLUMBING AND ELECTRICAL WITH APPROPRIATE TRADES, DRAWINGS AND SUBCONTRACTORS PRIOR TO CONSTRUCTION. OPENINGS MAY REQUIRE ADDITIONAL REINFORCING OR SUPPORTS AS SHOWN ON TYPICAL DETAILS. IF TYPICAL DETAILS FOR ALL CONDITIONS ARE NOT INCLUDED HEREIN, IT SHALL BE THE RESPONSIBILITY OF THE CONTRACTOR TO REQUEST IN WRITING ADDITIONAL INFORMATION.

16. ALL INSPECTIONS REQUIRED BY THE BUILDING CODES, LOCAL BUILDING OFFICIALS, OR BY THESE PLANS SHALL BE PROVIDED BY AN INDEPENDENT INSPECTION COMPANY OR, THE BUILDING DEPARTMENT. INSPECTION REQUIREMENTS STATED HEREIN ARE PARTIAL. COMPLETE INSPECTION REQUIREMENTS SHALL BE AS DIRECTED BY THE LOCAL BUILDING DEPARTMENT. SITE VISITS BY THE ENGINEER DO NOT CONSTITUTE AN INSPECTION, UNLESS SPECIFICALLY CONTRACTED FOR.

17. SHOP DRAWINGS (3 COPIES ONLY) SHALL BE SUBMITTED FOR ALL STRUCTURAL ITEMS. SHOP DRAWINGS ARE REVIEWED ONLY FOR GENERAL COMPLIANCE WITH THE STRUCTURAL DRAWINGS. REVIEW DOES NOT INDICATE THAT THE SHOP DRAWINGS ARE CORRECT OR COMPLETE. RESPONSIBILITY FOR CORRECTNESS SHALL REST WITH THE CONTRACTOR. ANY CHANGES, SUBSTITUTIONS, OR DEVIATIONS FROM CONTRACT DRAWINGS SHALL BE CLOUDED. ANY OF THE AFOREMENTIONED SHALL NOT BE CONSIDERED APPROVED AFTER ENGINEER'S REVIEW UNLESS SPECIFICALLY NOTED ACCORDINGLY. THE SHOP DRAWINGS DO NOT SUPERSEDE OR REPLACE THE ORIGINAL CONTRACT DRAWINGS. ANY ENGINEERING PROVIDED BY OTHERS AND SUBMITTED FOR REVIEW SHALL BEAR THE SEAL OF AN APPROPRIATELY REGISTERED ENGINEER. THE ENGINEER SHALL NOT BE RESPONSIBLE FOR THE ADEQUACY OF ENGINEERING DESIGNS PERFORMED BY OTHERS. ALLOW 5 WORKING DAYS FOR THE ENGINEER'S REVIEW. ONE COPY OF EACH SUBMITTAL WILL BE RETAINED FOR THE ENGINEER'S RECORDS.

18. ALL RFI'S SHALL BE RESPONDED TO BY THE CONTRACTOR/ARCHITECT BEFORE SUBMITTING TO THE ENGINEER OF RECORD. CONTRACTOR TO VERIFY ENGINEER'S RFI RESPONSE HAS BEEN FULFILLED.

19. IF A CONTRACTOR OR OWNER FAILS TO OBTAIN ENGINEERING APPROVAL OF THE SHOP DRAWINGS, THE ENGINEER WILL NOT BE RESPONSIBLE FOR THE STRUCTURAL CERTIFICATION AND DESIGN OF THE PROJECT. THE GENERAL CONTRACTOR SHALL REVIEW ALL SHOP DRAWINGS BEFORE SUBMISSION TO THE ENGINEER AND MAKE ALL CORRECTIONS AS HE/SHE DEEMS NECESSARY AND SHALL CERTIFY ON EACH DRAWING AS FOLLOWS:

"I CERTIFY THAT THE CONTRACT DOCUMENT REQUIREMENTS HAVE BEEN MET AND ALL DIMENSIONS, CONDITIONS AND QUANTITIES ARE VERIFIED AS SHOWN AND/OR AS CORRECTED ON THIS DRAWING"

SIGNED . . . . . .

DATE: . . . . . **(FOR G.C.)**

BASIS FOR DESIGN

1. BUILDING CODE: 2020 EDITION OF THE FLORIDA BUILDING CODE (FBC)
2. ROOF LOADS: LIVE LOAD (PSF): 20 SLOPE LESS THAN 4:12
   DEAD LOAD (PSF): PER MFR
3. WIND LOAD: 140 MPH BASIC WIND SPEED (ULT); 108 MPH (ASD)
   EXPOSURE C
   INTERNAL PRESSURE COEFFICIENT ±0.55 (PARTIALLY ENCLOSED)
4. SEISMIC DATA: N/A

FOUNDATION NOTES

1. FOOTINGS DESIGNED PER FBC 2020 ASSUMED VALUE
2. FOOTING DEPTH: BASE OF CONVENTIONAL FOOTINGS SHOULD BE EMBEDDED A MINIMUM OF 12 INCHES BELOW LOWEST ADJACENT EXTERIOR GRADE. (SEE BELOW FOR DEFINITION OF GRADE)
3. ALLOWABLE FOOTING BEARING: 2000 PSF TO BE FIELD VERIFIED
4. LATERAL DESIGN SOIL PRESSURE: AT CANTILEVER RETAINING WALLS 35 PSF/FT ACTIVE PRESSURE (EQUIVALENT FLUID).
   AT BRACED WALLS 55 PSF/FT AT REST PRESSURE (EQUIVALENT FLUID).
   FRICTION COEFFICIENT 0.3 (WITH 1.5 FACTOR SAFETY)
5. SLAB-ON-GRADE SUPPORT: 6 INCH LAYER OF SELECT GRANULAR FILL MATERIAL (PER SOIL REPORT) PLACED UNDER 10 MIL MINIMUM VISQUEEN MEMBRANE.
6. ALL FOOTINGS SHALL EXTEND TO DEPTH NOTED ABOVE UNO ON PLANS OR DETAIL. GRADE IS DEFINED AS TOP OF SLAB FOR INTERIOR FOOTINGS, AND LOWEST ADJACENT COMPACTED SUBGRADE (PAD GRADE BEFORE LANDSCAPING) OR NATURAL GRADE WITHIN 5 FEET OF BUILDING FOR PERIMETER FOOTINGS. GRADE IS DEFINED AS TOP OF EXTERIOR PAVING OR CONCRETE WHERE EXTERIOR PAVING OR CONCRETE IS PERMANENTLY LOCATED DIRECTLY ADJACENT TO BUILDING AND EXTENDS AT LEAST 5 FEET FROM BUILDING. LOCATION OF FOUNDATIONS NEAR SLOPES SHALL COMPLY WITH FBC. FOOTING EXCAVATIONS SHALL BE CLEAN AND FREE FROM LOOSE DEBRIS, STANDING WATER, OR UNCOMPACTED MATERIAL AT TIME OF CONCRETE PLACEMENT.
7. UNLESS NOTED OTHERWISE IN THE GEOTECHNICAL REPORT, CONCRETE SLABS ON GRADE SHALL BE SUPPORTED ON SELECT FILL MATERIAL AS NOTED ABOVE. FILL MATERIAL SHOULD BE MOISTENED, BUT NOT SATURATED JUST PRIOR TO PLACING CONCRETE. CARE SHALL BE TAKEN IN PLACING SLABS ON GRADE SO AS NOT TO DISTURB FILL MATERIAL OR REINFORCING.
8. SITE PREPARATION AND GRADING REQUIREMENTS OF THE STRUCTURAL ENGINEER AND ANY ADDENDA SHALL BE COMPLETED PRIOR TO CONSTRUCTION OF FOUNDATIONS. ANY TESTS, INSPECTIONS, FIELD OBSERVATIONS, OR APPROVAL FROM THE STRUCTURAL ENGINEER SHALL BE PERFORMED PRIOR TO PLACEMENT OF FOUNDATION REINFORCING STEEL OR CONCRETE. ALTERATIONS TO SITE PREPARATION OR GRADING SHALL BE REPORTED TO THE ENGINEER PRIOR TO FOUNDATION CONSTRUCTION.
9. BACKFILL AGAINST FOUNDATION WALLS OR EXTERIOR WALLS BELOW GRADE SHALL NOT BE PLACED UNTIL AFTER THE TOP OF THE WALLS ARE RESTRAINED BY THE COMPLETED INTERIOR FLOOR SYSTEMS.
10. POSITIVE PERMANENT DRAINAGE AWAY FROM THE FOUNDATIONS SHALL BE PROVIDED PER THE GEOTECHNICAL ENGINEERS RECOMMENDATIONS.

CONCRETE

1. MINIMUM 28 DAY STRENGTH (f'c) SHALL BE 4000, W/C = .45
2. CONCRETE MIXES SHALL BE DESIGNED BY A CERTIFIED LABORATORY AND APPROVED BY THE ENGINEER.
3. ALL CONCRETE SHALL BE REGULAR WEIGHT OF 140 POUNDS PER CUBIC FOOT USING LIMESTONE AGGREGATES. AGGREGATE USED IN CONCRETE SHALL CONFORM TO ASTM C33, CONCRETE AGGREGATES.
4. MAXIMUM SLUMP FOR EXTERIOR SLABS SHALL BE 6 INCHES. MAXIMUM SLUMP FOR ALL OTHER CONCRETE SHALL BE 5 INCHES. WATER SHALL BE CLEAN AND POTABLE.
5. PORTLAND CEMENT SHALL CONFORM TO ASTM C150. TYPE II CEMENT SHALL BE USED FOR ALL CONCRETE. MAXIMUM CHLORIDE ION, PERCENT BY WEIGHT OF CEMENT, SHALL NOT EXCEED 0.06.
6. NO MORE THAN 90 MINUTES SHALL ELAPSE BETWEEN CONCRETE BATCHING AND CONCRETE PLACEMENT, UNLESS APPROVED BY THE ENGINEER OR AUTHORIZED TESTING AGENCY.
7. CONCRETE MIXING, PLACEMENT AND QUALITY SHALL BE PER FBC, ASTM C94, ASTM C685, AND ACI 302. MECHANICALLY VIBRATE ALL CONCRETE WHEN PLACED, EXCEPT SLABS ON GRADE NEED ONLY BE VIBRATED OR THOROUGHLY RODDED AROUND EMBEDDED STRAPS OR HARDWARE, BOLTS FOR HOLDOWNS, PT ANCHORAGES (AS OCCUR), CURBS AND EDGES OF SLAB STEPS AND UNDER FLOOR DUCTS OR SIMILAR ELEMENTS. REMOVE ALL DEBRIS FROM FORMS BEFORE PLACING CONCRETE. CONCRETE SHALL NOT BE DROPPED THROUGH REINFORCING STEEL (AS IN WALLS AND COLUMNS) SO AS TO CAUSE SEGREGATION OF AGGREGATES. UNCONFINED FALL OF CONCRETE SHALL NOT EXCEED 5 FEET. CARE SHALL BE TAKEN IN PLACING SLABS ON GRADE SO AS NOT TO DISTURB FILL MATERIAL.
8. ALL ITEMS TO BE CAST IN CONCRETE SUCH AS REINFORCING, DOWELS, BOLTS, ANCHORS, PIPES, SLEEVES, ETC. SHALL BE SECURELY POSITIONED IN THE FORMS BEFORE PLACING THE CONCRETE.
9. CONCRETE SLAB ON GRADE WHERE NOTED CONTROL JOINTS SHALL BE AS SHOWN ON THE FOUNDATION PLAN OR TYPICAL DETAILS. WHERE CONTROL JOINTS ARE NOT SHOWN ON PLANS, ALL CONCRETE SLABS ON GRADE SHALL BE BOUNDED BY KEYED, DOWELED OR SAW-CUT CONTROL JOINTS SUCH THAT THE ENCLOSED AREA DOES NOT EXCEED 260 SQUARE FEET. RATIO OF BOUNDARY DIMENSIONS SHALL NOT EXCEED 1.5:1. KEYED OR DOWELED CONTROL JOINTS NEED ONLY OCCUR AT EXPOSED EDGES DURING POURING. ALL OTHER JOINTS MAY BE SAW CUT.

CONCRETE

10. CONSTRUCTION JOINTS OR POUR JOINTS IN STRUCTURAL ELEMENTS (BEAMS, COLUMNS, ELEVATED SLABS, ETC.) NOT SPECIFICALLY SHOWN OR NOTED ON THE DRAWINGS REQUIRE PRIOR APPROVAL OF THE ENGINEER. CONTRACTOR SHALL SUBMIT SHOP DRAWINGS SHOWING PROPOSED JOINTS TO ENGINEER FOR APPROVAL.
11. PIPES OTHER THAN ELECTRICAL CONDUITS SHALL NOT BE EMBEDDED IN STRUCTURAL CONCRETE EXCEPT WHERE SPECIFICALLY APPROVED BY THE ENGINEER. MAXIMUM PIPE SIZE SHALL BE 1/3 OF THE SLAB THICKNESS AND LOCATED AT THE MID-DEPTH. MINIMUM SPACING SHALL BE 3 TIMES THE PIPE DIAMETER. PIPES SHALL NOT IMPAIR THE STRENGTH OF THE MEMBER.
12. PROTECT CONCRETE FROM DAMAGE OR REDUCED STRENGTH DUE TO COLD OR HOT WEATHER IN ACCORDANCE WITH ACI 305 AND 306 AND FBC.
13. ALL CONCRETE WORK SHALL CONFORM TO THE LATEST APPROVED (BY LOCAL GOVERNMENT) EDITION OF THE FOLLOWING A.C.I. AND A.S.T.M. DOCUMENTS:

ACI - 318	CODE
ACI - 214	COMPRESSION TESTS
ACI - 306	COLD WEATHER
ACI - 315	DETAILING
ACI - 347	FORMWORK
ACI - 605	HOT WEATHER
ACI - 613	PROPORTIONS OF CONCRETE
ACI - 614	PLACING CONCRETE
ASTM - C94	READY-MIX CONCRETE

14. ALL FIELD AND JOB TESTING OF CONCRETE SHALL CONFORM TO THE LATEST APPROVED (BY LOCAL GOVERNMENT) EDITIONS OF ASTM:

ASTM C - 31	FIELD CYLINDER SPECIMENS
ASTM C - 143	SLUMP TEST
ASTM C - 173 OR C-231	AIR CONTENT (WHEN REQUIRED)
ASTM C - 39	LAB TESTING CYLINDERS
ASTM C - 172	SAMPLING FRESH CONCRETE
ASTM C - 42	HARDENED CORES (WHEN REQUIRED)

A MINIMUM OF 5 CYLINDERS SHALL BE TAKEN FOR EACH 100 YDS OF CONCRETE. BREAK ONE CYLINDER AT 3 DAYS, 1 AT 7 DAYS, 2 AT 28 DAYS AND HOLD ONE FOR 56 DAYS.
UPON COMPLETION OF CONCRETE TESTING, THE AGENCY SHALL CERTIFY THEIR RESULTS AS FOLLOWS:

"I CERTIFY THAT THE FIELD AND JOB TESTING CONFORM TO THE ASTM DOCUMENTS AND GOOD PRACTICE.

SIGNED.....,P.E."
(FOR AGENCY)

TESTS WILL NOT REVIEWED BY EOR UNLESS SIGNED AS NOTED.

15. CONCRETE FORMWORK SHALL NOT BE DISTURBED UNTIL THE CONCRETE HAS HARDENED
    TO BE ABLE TO SUPPORT ITS OWN WEIGHT PLUS A MINIMUM OF 20 PSF CONSTRUCTION LOAD. FORMS MUST REMAIN IN PLACE A MINIMUM OF SEVEN DAYS BEFORE REMOVAL
    AND THAT THE AIR IN CONTACT WITH THE CONCRETE HAS BEEN KEPT AT LEAST 50 DEGREES.
16. ALL ALUMINUM EMBEDDED IN CONCRETE SHALL BE COATED SO AS NOT TO HAVE CONTACT WITH CONCRETE.

NOTE:
ALL EXPOSED CONCRETE SHALL BE PROTECTED WITH A WATER-PROOF PROTECTIVE COATING. STRUCTURAL DESIGN IS BASED ON THE STRENGTH DESIGN METHOD PERMITTED BY ACI-318. LIMITED CRACKING IS TO BE EXPECTED IN ANY CONCRETE STRUCTURE BUT THE CRACKING CAN BE MINIMIZED BY LIMITING THE WATER/CEMENT RATIO AS NOTED IN NOTE #1 ABOVE AND BY PROPER PLACEMENT OF REINFORCEMENT AND PROPER CURING PROCEDURES AS SPECIFIED BY ACI.

NOTE:
MAINTENANCE OF ALL EXPOSED STRUCTURAL ELEMENTS IS RECOMMENDED EVERY 4 TO 5 YEARS AND AS REQUIRED PER IPMC CODE (LATEST EDITION)

REINFORCING STEEL

1. REINFORCING STEEL SHALL CONFORM TO THE REQUIREMENTS OF ASTM A615. REINFORCING SHALL BE GRADE 60 (FY = 60 KSI) DEFORMED BARS FOR ALL BARS. ALL REINFORCING TO BE WELDED SHALL BE ASTM A706, GRADE 60 LOW ALLOY WELDABLE STEEL.
2. WELDED WIRE FABRIC SHALL CONFORM TO THE REQUIREMENTS OF ASTM A185. LAPS IN WELDED WIRE FABRIC SHALL BE MADE SUCH THAT THE OVERLAP, MEASURED BETWEEN OUTERMOST CROSS WIRE OF EACH FABRIC SHEET, IS NOT LESS THAN THE SPACING OF CROSS WIRES PLUS 2 INCHES.
3. ALL DIMENSIONS SHOWING THE LOCATION OF REINFORCING STEEL NOT NOTED AS "CLEAR" OR "CLR" ARE TO CENTER OF STEEL. MINIMUM COVER FOR NON-PRESTRESSED CONCRETE REINFORCING SHALL BE AS FOLLOWS, UNLESS NOTED OTHERWISE ON PLANS OR DETAILS:

EXPOSURE CONDITION:	MINIMUM COVER:	TOLERANCES (+ / -):
CAST AGAINST AND PERMANENTLY EXPOSED TO EARTH:	3"	3/8"
EXPOSED TO EARTH OR WEATHER:		
# 5 AND SMALLER:	2"	3/8"
# 6 AND LARGER:	2 1/4"	3/8"
NOT EXPOSED TO WEATHER OR IN CONTACT WITH THE GROUND:		
ROOF SLAB:	1"	1/8"
STRUCTURAL SLABS AND WALLS:	3/4"	1/8"
BEAMS AND COLUMNS (PRIMARY REINFORCEMENT, TIES, STIRRUPS AND SPIRALS):	1-1/2"	3/8"
SLABS ON GRADE:	1-1/2"	1/4"

4. LAP SPLICES OF REINFORCING STEEL IN CONCRETE BEAMS, SLABS AND FOOTINGS SHALL BE ACCORDING TO SHALL BE ACCORDING TO LAP SCHEDULE DETAIL 8 SHEET SD1.0. STAGGER SPLICES A MINIMUM OF ONE LAP LENGTH. NO TACK WELDING OF REINFORCING BARS ALLOWED. LATEST ACI CODE AND DETAILING MANUAL APPLY. PROVIDE BENT CORNER BARS TO MATCH AND LAP WITH HORIZONTAL BARS AT ALL CORNERS AND INTERSECTIONS PER TYPICAL DETAILS. VERTICAL WALL BARS SHALL BE SPLICED AT OR NEAR FLOOR LINES. SPLICE BARS TOP BARS AT CENTER LINE OF SPAN AND BOTTOM BARS AT THE SUPPORT IN SPANDRELS, BEAMS, GRADE BEAMS, ETC. UNLESS NOTED OTHERWISE.
5. ALL REINFORCING SHALL BE BENT COLD. BARS SHALL NOT BE STRAIGHTENED AND RE-BENT. FIELD BENDING OF REBAR SHALL NOT BE ALLOWED UNLESS SPECIFICALLY NOTED.
6. WELDING OF REINFORCING BARS, METAL INSERTS, AND CONNECTIONS SHALL CONFORM WITH FBC AND SHALL BE MADE ONLY AT LOCATIONS SHOWN ON PLANS OR DETAILS.
7. REINFORCING BAR SPACING SHOWN ON PLANS ARE AT MAXIMUM ON CENTERS. ALL BARS SHALL BE DETAILED AND PLACED PER CONCRETE REINFORCING STEEL INSTITUTE (CRSI) SPECIFICATIONS AND HANDBOOK. DOWEL ALL VERTICAL REINFORCING TO FOUNDATION. SECURELY TIE ALL BARS IN LOCATION BEFORE PLACING CONCRETE.

PRE-ENGINEERED BUILDING CRITERIA

1. PRE-ENGINEERED BUILDING MANUFACTURER SHALL BE RESPONSIBLE FOR THE ENTIRE DESIGN OF THE STEEL SUPERSTRUCTURE, ROOF, DECK, FASCIAS, SUPPORT, BRACING, LATERAL ANALYSIS AND ALL RELATED WORK IN ACCORDANCE WITH THE INTERNATIONAL BUILDING CODE AS LISTED IN THESE NOTES, AND ANY OTHER APPLICABLE CODES. THE PRE-ENGINEERED BUILDING SHALL BE DESIGNED TO SUPPORT SELF WEIGHT PLUS SUPERIMPOSED DEAD, LIVE, WIND AND/OR SEISMIC LOADING IN WHICHEVER COMBINATION PRODUCES THE MOST SEVERE CONDITION ACCORDING TO IBC PROVISIONS.
2. CONTRACTOR SHALL SUBMIT DESIGN CALCULATIONS AND SHOP DRAWINGS PRIOR TO MANUFACTURE. AN APPROPRIATELY REGISTERED ENGINEER SHALL SEAL CALCULATIONS AND SHOP DRAWINGS. SHOP DRAWINGS SHALL SHOW ALL PERTINENT DESIGN INFORMATION, INCLUDING, BUT NOT LIMITED TO, DESIGN LOADS, FOUNDATION REACTIONS, DIMENSIONS, MEMBER SIZES AND PROPERTIES, FRAMING PLANS, SECTIONS, AND ALL PERTINENT DETAILS.
3. PRE-ENGINEERED BUILDING MANUFACTURER SHALL SUPPLY ALL THE REQUIRED SUB-FRAMING FOR ROOF OPENINGS, INCLUDING FRAMING TO SUPPORT THE WEIGHT OF MECHANICAL EQUIPMENT. ALL ITEMS INCLUDING ROOF OPENINGS SHALL BE ADEQUATELY SUPPORTED.

HEY CONTRACTOR! THIS COVER SHEET AND GENERAL NOTES AREN'T JUST TO KEEP COFFEE STAINS OFF THE PLANS. IT IS IMPORTANT THAT YOU READ AND UNDERSTAND THE NOTES AND SPECIFICATIONS ON THIS SHEET, SHEET S1.1 AND ALL NOTES ON DETAILS PRIOR TO CONSTRUCTION. ANY QUESTIONS OR CONCERNS SHOULD BE BROUGHT TO THE ATTENTION OF THE ENGINEER.

SHEET INDEX

ISSUED 12/11/23	SHEET NO.	SHEET TITLE
•	S1.0	GENERAL STRUCTURAL NOTES
•	S2.0	FOUNDATION PLAN
•	SD1.0	FOUNDATION DETAILS

STRUCTURAL ENGINEERS
400 S. Atlantic Ave, Suite 106
Ormond Beach, FL 32176
Office: (386) 672-1214
Fax: (386) 672-1421
JOHN SIMKO
STRUCTURAL ENGINEER
FLORIDA REG. NO. 30122
CERTIFICATE OF AUTHORIZATION NO. 9286
msstructural@cfl.rr.com

HALL & OGLE ARCHITECTS, INC.
208 MAGNOLIA AVENUE
DAYTONA BEACH, FLORIDA 32114
www.hoarchitects.com
PH:(386) 255-6163
FAX:(386)257-5650
AA-C000925

REVISIONS

NO.	DATE	DESCRIPTION

FORESTRY MANAGEMENT
STORAGE BARN
CITY OF PORT ORANGE
4655 CITY CENTER CIRCLE
PORT ORANGE, FL

ARCHENGR OF RECORD
JOHN P. SIMKO, PE 30122

DESIGNED BY	DRAWN BY
JS	AK
ISSUE DATE	AE PROJECT NUMBER
18-JUNE-2024	2315

SHEET TITLE
GENERAL STRUCTURAL NOTES

DRAWING NO.
S1.0

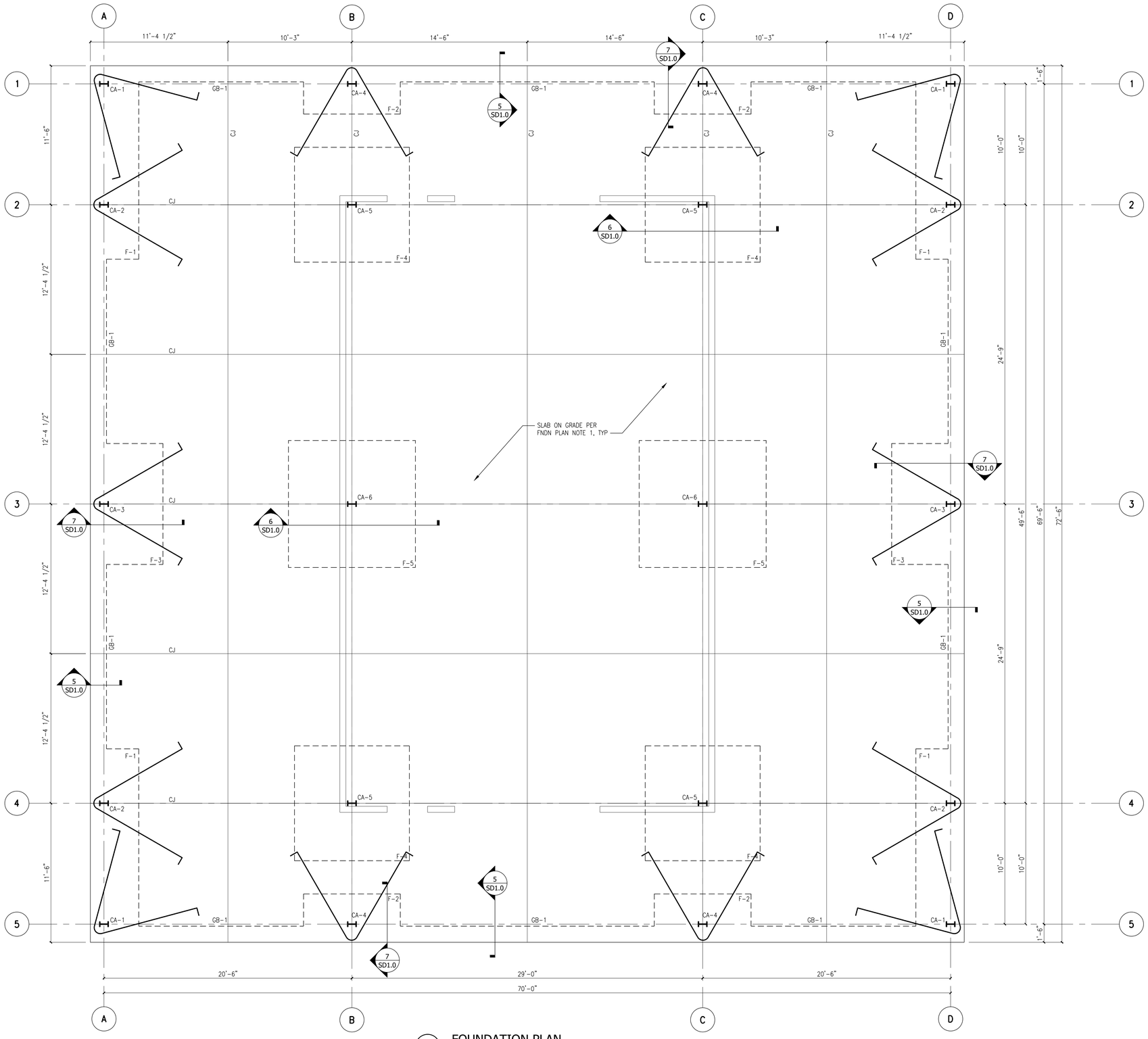

1 FOUNDATION PLAN

Scale: 1/4"=1'-0"

FOUNDATION PLAN NOTES:

1. 5" THICK CONCRETE SLAB ON GRADE WITH #4 AT 16" OC EW CENTERED IN SLAB OVER SUBGRADE PER GSN AND SOIL REPORT. SEE GSN AND TYPICAL DETAILS FOR CONCRETE PLACEMENT AND CONTROL JOINTS.
2. VERIFY ALL DIMENSIONS AND CONDITIONS WITH ARCHITECTURAL DRAWINGS. DIMENSIONS NOT NOTED SHALL BE PER APPROVED ARCHITECTURAL DRAWINGS. RESOLVE ANY DISCREPANCIES WITH THE ARCHITECT PRIOR TO CONSTRUCTION.
2. SEE ARCHITECTURAL FOR SLAB DEPRESSIONS, STEPS, SLOPES, DRAINS, EXTERIOR SLABS, ETC.
3. ESTABLISH AND VERIFY SIZE AND LOCATION OF OPENINGS AND INSERTS IN SLAB WITH OTHER DRAWINGS, TRADES AND SUBCONTRACTORS PRIOR TO CONSTRUCTION.
4. F-# INDICATES CONCRETE PAD FOOTING PER SCHEDULE THIS SHEET
5. GB-# INDICATES GRADE BEAM PER SCHEDULE THIS SHEET
6. CA-# INDICATES COLUMN ANCHORS AND HAIRPINS PER SCHEDULE THIS SHEET
7. FOOTINGS ARE ON COMPACTED FILL. FILL EXTENDS 5'-0" MINIMUM BEYOND BUILDING LINE VERIFY WITH GEOTECHNICAL ENGINEER. REMOVE ALL WATER SOFTENED SOILS FROM FOOTING EXCAVATIONS PRIOR TO PLACING CONCRETE. FILL REMAINING VOIDS WITH ADDITIONAL CONCRETE. FORM ALL FOOTINGS IF SOIL ITSELF IS UNSTABLE FOR SUPPORT.
8. SEE DETAIL 1 SHEET SD1.0 FOR EMBEDDED PIPE AT FOUNDATIONS.
9. WHERE FOOTINGS ARE PIERCED BY PLUMBING AND HEATING PIPES, PROVIDE PIPE SLEEVES. MECHANICAL CONTRACTOR TO COORDINATE LOCATIONS. STEP FOOTING AS NEEDED TO CLEAR FOOTING, SEE DETAIL 2/SD3.0.
10. ALL CONSTRUCTION JOINTS IN FOOTINGS SHALL OCCUR AT MID-SPANS OF GRADE BEAMS AND BE FORMED VERTICALLY.
11. SUPPORT ALL BOTTOM REINFORCING IN FOOTINGS WITH CONCRETE BRICKS SPACED AT 36" OC MAX AS PER ACI-SP-11.
12. IN NO CASE SHALL TRUCKS, BULLDOZERS OR HEAVY EQUIPMENT BE PERMITTED WITHIN 8'-0" OF ANY FRESHLY POURED CONCRETE FOUNDATIONS.
13. PROVIDE CONTROL JOINTS IN SLAB AT MAXIMUM OF 225 SQUARE FEET. SEE CONTROL JOINT DETAIL 4 SHEET SD1.0
14. ALL CONCRETE SHALL BE A MINIMUM 28-DAY STRENGTH, f'c=4000 PSI

SPREAD FOOTING SCHEDULE

MARK	DEPTH	WIDTH	LENGTH	REINFORCING
F-1	20"	4'-0"	16'-0"	4-#6 LONG TOP #5 TRANSV AT 12" OC BOTTOM 5-#7 LONG BOTTOM-MOST
F-2	20"	4'-0"	8'-0"	4-#5 LONG TOP #5 TRANSV AT 12" OC BOTTOM 4-#5 LONG BOTTOM-MOST
F-3	20"	6'-0"	10'-0"	6-#5 LONG TOP #5 TRANSV AT 12" OC BOTTOM 6-#5 LONG BOTTOM-MOST
F-4	32"	9'-6"	9'-6"	7-#5 EACH WAY TOP 9-#6 EACH WAY BOTTOM
F-5	32"	10'-6"	10'-6"	8-#5 EACH WAY TOP 10-#6 EACH WAY BOTTOM

NOTES:

1. SEE PLAN GRAPHICS FOR ORIENTATION OF FOOTINGS
2. TOP BARS NOTED ARE IN ADDITION TO SLAB REINFORCING. EXTEND ALL SLAB REINFORCING THROUGH SPREAD FOOTINGS.

GRADE BEAM SCHEDULE

MARK	WIDTH	DEPTH	CONTINUOUS REINFORCING	TIE REINFORCING
GB-1	1'-4"	1'-8"	2-#5 TOP AND BOTTOM	#3 TIES AT 2" FROM FOOTING FACE, 16" OC REMAINDER

COLUMN ANCHOR & HAIRPIN SCHEDULE

MARK	ANCHOR BOLTS	TIE REINFORCING
CA-1	(4) 3/4" DIA x 15" EMBED	1-#5 HAIRPINS WITH 8'-0" LONG LEGS + 8" HOOK CENTERED IN SLAB THICKNESS
CA-2	(4) 3/4" DIA x 15" EMBED	1-#5 HAIRPINS WITH 8'-0" LONG LEGS + 8" HOOK CENTERED IN SLAB THICKNESS
CA-3	(4) 3/4" DIA x 15" EMBED	1-#5 HAIRPINS WITH 8'-0" LONG LEGS + 8" HOOK CENTERED IN SLAB THICKNESS
CA-4	(4) 3/4" DIA x 15" EMBED	1-#5 HAIRPINS WITH 8'-0" LONG LEGS + 8" HOOK CENTERED IN SLAB THICKNESS
CA-5	(4) 3/4" DIA x 24" EMBED	N/A
CA-6	(4) 3/4" DIA x 24" EMBED	N/A

NOTES:

1. SEE BUILDING MANUFACTURER PLANS FOR ANCHOR LAYOUT AT EACH COLUMN TYPE.
2. ALL 3/4" DIA ANCHORS TO BE ASTM F1554 GR 36 ANCHOR RODS WITH DOUBLE NUTS AND PLATE WASHER 1/2" x 2 1/4" SQUARE AT EMBEDDED END
3. ALL HAIRPINS TO BE BENT AT 30 DEGREE INCLUDED ANGLES. SEE TYPICAL BENDING DETAIL 3 SHEET SD1.0

STRUCTURAL ENGINEERS
400 S. Atlantic Ave,
Suite 106
Ormond Beach, FL 32176
Office: (386) 672-1214
Fax: (386) 672-1421
JOHN SIMKO
STRUCTURAL ENGINEER
FLORIDA REG. NO. 30122
CERTIFICATE OF
AUTHORIZATION NO. 9286
msstructural@cfl.rr.com

HALL & OGLE
ARCHITECTS, INC.
208 MAGNOLIA AVENUE
DAYTONA BEACH, FLORIDA 32114
www.hoarchitects.com
PH.(386) 255-6163
FAX.(386)257-5650
AA-C000925

REVISIONS

NO.	DATE	DESCRIPTION

DOCUMENT HISTORY

FORESTRY MANAGEMENT STORAGE BARN
CITY OF PORT ORANGE
4655 CITY CENTER CIRCLE
PORT ORANGE, FL

ARCH/ENGR OF RECORD
JOHN P. SIMKO, PE 30122

DESIGNED BY	DRAWN BY
JS	AK

ISSUE DATE	AE PROJECT NUMBER
18-JUNE-2024	2315

SHEET TITLE
FOUNDATION PLAN

DRAWING NO.
S2.0

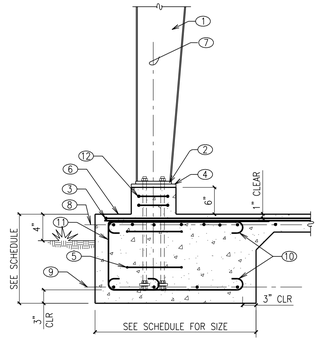

1. STEEL COLUMN BY BUILDING MFR
2. BASE PLATE PER METAL BUILDING MANUFACTURER
3. HAIRPIN PER SCHEDULE
4. 3/4" NON-SHRINK GROUT
5. #3 TIES AT 8" OC
6. CONCRETE SLAB PER PLAN
7. COLUMN CENTERLINE
8. TOP REINF PER PLAN AND SCHEDULE ADDED TO SLAB REINF
9. BOTTOM REINF PER PLAN AND SCHEDULE
10. STANDARD HOOK AT TRANSVERSE REINFORCING, TOP & BOTTOM
11. CONTINUE STIRRUPS FROM GRADE BEAM BEYOND
12. (2) #3 CLOSED TIES AT 2" OC IN PEDESTAL

7 FOOTING AT PERIMETER COLUMNS

Scale: NONE

CONCRETE LAP SCHEDULE (1)(3)

BAR SIZE	MIN. BAR SPACING (IN) (2)	6000 PSI		5000 PSI		3000 PSI		4000 PSI	
		TOP (4) BARS	OTHER BARS	TOP (4) BARS	OTHER BARS	TOP (4) BARS	OTHER BARS	TOP (4) BARS	OTHER BARS
2	1	15	15	20	16	19	14	16	12
3	1	20	15	22	17	28	22	24	19
4	1	26	20	29	22	37	29	32	25
5	1 1/4	33	25	36	28	47	36	40	31
6	1 1/2	40	31	43	33	56	43	48	37
7	1 3/4	58	44	63	49	81	63	70	54
8	2	66	51	72	55	93	72	80	62
9	2 1/4	74	57	81	63	105	81	91	70
10	2 1/2	83	64	91	70	118	91	102	79
11	2 3/4	93	71	101	78	131	101	113	87

1. LAP LENGTHS BASED ON CLASS B LAP SPLICE PER ACI 318-14 FOR NORMAL WT CONCRETE AND UNCOATED BARS. ALL LAP LENGTHS ARE IN INCHES
2. BAR SPACING IS MEASURED AS CLEAR DISTANCE BETWEEN BARS. NOTIFY ENGINEER WHERE BAR SPACING IS LESS THAN MIN SPACING NOTED IN SCHEDULE
3. SEE PLAN OR GSN FOR CONCRETE STRENGTH
4. TOP BARS ARE BARS SO PLACED THAT 12 INCHES OR MORE OF FRESH CONCRETE IS CAST IN MEMBER BELOW SPLICE

8 TYPICAL REBAR LAP SPLICE SCHEDULE FOR CONCRETE

Scale: NONE

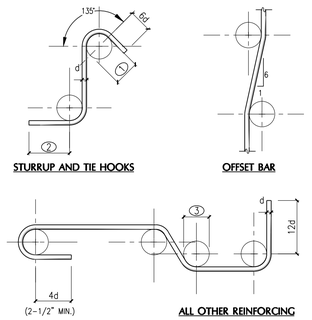

1. MINIMUM FINISHED BEND DIAMETER 4d FOR #5 BAR AND SMALLER, 6d FOR #6 THRU #8. TYPICAL FOR STIRRUPS AND TIES ONLY
2. 6d FOR #5 AND SMALLER 12d FOR #6 THRU #8
3. MINIMUM FINISHED BEND DIAMETER 6d UP TO #8 BAR, 8d FOR #9 THRU #11, 12d FOR #14 AND #18. TYPICAL FOR ALL REINFORCING EXCEPT STIRRUPS AND TIES

NOTE:
1. d = BAR DIAMETER
2. ALL REINFORCEMENT SHALL BE BENT COLD UNLESS NOTED OTHERWISE ON PLANS OR DETAILS
3. REINFORCING PARTIALLY EMBEDDED IN CONCRETE SHALL NOT BE FIELD BENT UNLESS SPECIFICALLY NOTED ON PLANS OR DETAILS

3 STANDARD REBAR BENDING DETAIL

Scale: NONE

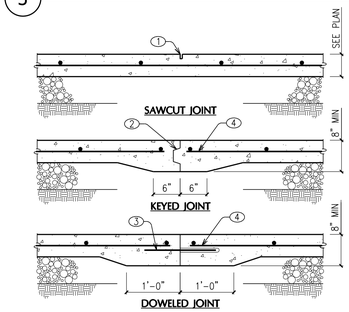

1. SAWCUT JOINT. 1/8" WIDE x 1/4 SLAB THICKNESS. CUT SHOULD BE MADE AS SOON AS POSSIBLE TO PREVENT UNCONTROLLED SHRINKAGE CRACKING BUT NOT SO SOON AS TO CAUSE RAVELING, ERODING OR SPALLING OF JOINT. CUT SHOULD BE MADE WITHIN 12 HOURS OF CONCRETE PLACEMENT
2. 1 1/2"x3 1/2" CONT TAPERED KEY
3. 3/4" DIAx16" LONG SMOOTH DOWEL AT 18" OC. POLYETHYLENE WRAP ONE END TO PREVENT BOND TO CONCRETE. CENTER IN SLAB THICKNESS AT POUR JOINT. MISLOCATED DOWELS WILL CAUSE CRACKING
4. INTERRUPT EVERY OTHER BAR AT KEYED JOINT. INTERRUPT ALL BARS AT DOWELED JOINT. CENTER REINF BARS IN SLAB THICKNESS UNLESS NOTED OTHERWISE
4. CONCRETE CONTROL JOINTS SHALL BE LOCATED ACCORDING TO GEN STRUCTURAL NOTES OR AS SHOWN ON PLANS. ADD CONTROL JOINTS SUCH THAT AREA ENCLOSED BY JOINTS DOES NOT EXCEED 260 SQ FEET WITH ASPECT RATIO LESS

NOTES: 1. USE DOWELED OR KEYED JOINT AT SLOPE TRANSITIONS IN RAMPS AT SLAB ON GRADE
2. KEYED OR DOWELED JOINT NEED ONLY OCCUR AT EXPOSED EDGES DURING PLACEMENT

4 TYPICAL CONTROL JOINT IN SLAB ON GRADE

Scale: NONE

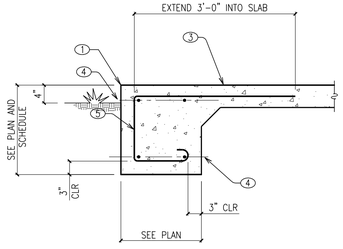

1. TOOLED EDGE WHERE REQUIRED BY ARCH'L
2. (1) # 5 CONT
3. CONCRETE SLAB PER PLAN
4. CONTINUOUS REINFORCING PER GRADE BEAM SCHEDULE
5. STIRRUPS PER GRADE BEAM SCHEDULE

NOTES:
1. TAPER GRADE BEAM TO FOOTING

5 GRADE BEAM BETWEEN FOOTINGS

Scale: NONE

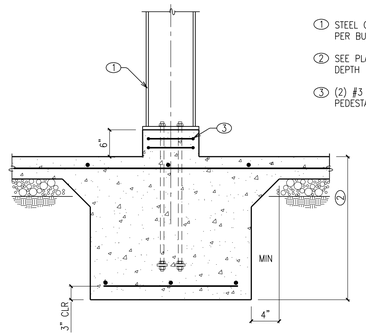

1. STEEL COLUMN AND BASE PLATE PER BUILDING MANUFACTURER
2. SEE PLAN AND SCHEDULE FOR DEPTH
3. (2) #3 CLOSED TIES AT 2" OC IN PEDESTAL

6 INTERIOR COLUMN AT CONCRETE FOOTING

Scale: NONE

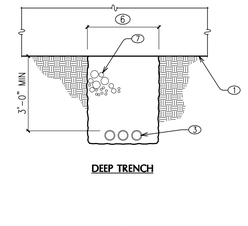

1. BOTTOM OF CONCRETE FOOTING OR FOUNDATION
2. SLEEVE. SIZE TO PROVIDE 1 1/2" MIN. CLEARANCE AROUND UTILITY PIPE
3. UTILITY PIPE
4. LEAN CONCRETE FILL. PLACE PRIOR TO FOOTING PLACEMENT. EXTEND CONCRETE AND SLEEVE 3'-0" PAST EACH SIDE FOOTING
5. CLEARANCE EQUAL TO SLEEVE DIA (6" MIN)
6. 4'-0" MAX. WIDTH. WHERE TRENCH WIDTH EXCEEDS 3'-0", NOTIFY STRUCTURAL ENGINEER PRIOR TO PLACEMENT OF FOOTING
7. BACKFILL AND RECOMPACT TRENCH PER SOIL REPORT AND SPECIFICATIONS
8. BOTTOM OF TRENCH PARALLEL TO FOUNDATION SHALL NOT BE CLOSER THAN 1 TO 1 SLOPE FROM BOTTOM EDGE OF FOOTING

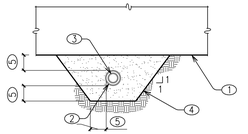

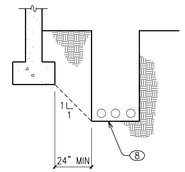

NOTE 1. PIPES SHALL NOT PASS THRU FOOTING OR WALL WITHOUT SPECIFIC APPROVAL AND INSTRUCTIONS FROM THE ENGINEER.
2. FOOTING SETTLEMENT OR DIFFERENTIAL MOVEMENT MAY DAMAGE UTILITY PIPES. DETAILS ARE SUGGESTED MEANS OF PROTECTING PIPES. ENGINEER SHALL NOT BE RESPONSIBLE FOR ANY DAMAGE TO PIPES OR FOUNDATIONS

1 TYPICAL UTILITY TRENCH AT CONTINUOUS FOOTING

Scale: NONE

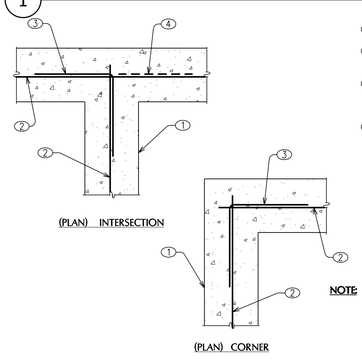

1. STEM WALL OR FOOTING
2. HORIZ REINFORCING PER PLAN OR DETAILS
3. BENT CORNER BARS TO MATCH AND LAP WITH EACH HORIZ BAR PER REBAR LAP SCHEDULE
4. ALTERNATE BEND

NOTE: 1. VERT OR TRANSVERSE REINFORCING AS OCCURS NOT SHOWN FOR CLARITY
2. BEND DETAILS SIMILAR FOR DOUBLE MAT OF WALL REINFORCING

2 TYPICAL CORNER REINFORCING IN FOOTINGS

Scale: NONE

HALL & OGLE ARCHITECTS, INC.
208 MAGNOLIA AVENUE
DAYTONA BEACH, FLORIDA 32114
www.hoarchitects.com
PH:(386) 255-6163
FAX:(386)257-5650
AA-C000925

REVISIONS

NO.	DATE	DESCRIPTION

DOCUMENT HISTORY

FORESTRY MANAGEMENT STORAGE BARN
CITY OF PORT ORANGE
4655 CITY CENTER CIRCLE
PORT ORANGE, FL

STRUCTURAL ENGINEERS
400 S. Atlantic Ave,
Suite 106
Ormond Beach, FL 32176
Office: (386) 672-1214
Fax: (386) 672-1421
JOHN SIMKO
STRUCTURAL ENGINEER
FLORIDA REG. NO. 30122
CERTIFICATE OF
AUTHORIZATION NO. 9286
msstructural@cfl.rr.com

ARCH/ENGR OF RECORD: JOHN P. SIMKO, PE 30122

DESIGNED BY	DRAWN BY
JS	AK
ISSUE DATE	AE PROJECT NUMBER
18-JUNE-2024	2315

SHEET TITLE: DETAILS

DRAWING NO.: SD1.0

HVAC SYMBOLS

SYMBOL	DESCRIPTION
	NEW DUCT WORK
	FLEXIBLE DUCT
	SUPPLY AIR DUCT WORK
	RETURN AIR OR EXHAUST DUCT WORK
	DUCT WORK TRANSITION
	90° ELBOW WITH TURNING VANES
	RADIUS ELBOW
	MANUAL AIR VOLUME CONTROL DAMPER
OR	SUPPLY AIR DEVICE
	RETURN AIR DEVICE
	EXHAUST AIR DEVICE
T	WALL MOUNTED THERMOSTAT
S	WALL MOUNTED TEMPERATURE SENSOR
SP	STATIC PRESSURE SENSOR
PS	ANSUL SYSTEM PULL STATION
SD	DUCT SMOKE DETECTOR
A-100	DIFFUSER DEVICE TYPE - AIR QUANTITY
TYP.	TYPICAL
(E)	EXISTING
RTU-10	EQUIPMENT DESIGNATION TAG
UC	1" DOOR UNDERCUT
1	REVISION REFERENCE
R	REFRIGERATION PIPING
	CONDENSATE PIPING ON ROOF
CD	CONDENSATE DRAIN PIPING
FD	FIRE DAMPER
SD	SMOKE DAMPER
F/SD	FIRE/SMOKE DAMPER
CO	CLEANOUT
	ACCESS DOOR/PANEL

DRAWING INDEX

SHEET NUMBER	TITLE
M0.1	Mechanical General Information
M0.2	Mechanical Schedules and Details
M1.1	Mechanical Floor Plan

TESTING AND BALANCING NOTES

1. CONTRACTOR WILL BE RESPONSIBLE TO PROVIDE TESTING, ADJUSTING AND BALANCING FOR THIS PROJECT. TESTING, ADJUSTING AND BALANCING SHALL BE DONE IN ACCORDANCE WITH THESE NOTES.
2. THE FOLLOWING MECHANICAL (HVAC) SYSTEMS SHALL BE TESTED, ADJUSTED AND BALANCED:
   A. AIR HANDLING UNITS.
   B. EXHAUST FANS.
   C. LOUVERS.
3. PRIOR TO COMMENCING ANY WORK; REVIEW CONTRACT DOCUMENTS, TESTING,ADJUSTING AND BALANCING STRATEGIES AND STEP-BY-STEP PROCEDURES.
4. CONTRACTOR PROVIDING TESTING, ADJUSTING AND BALANCING SHALL BE CERTIFIED BY EITHER AABC OR NEBB.
5. TESTING, ADJUSTING AND BALANCING REPORT FORMS SHALL BE STANDARD FORMS FROM EITHER AABC OR NEBB.
6. CONTRACTOR SHALL COORDINATE THE EFFORTS OF FACTORY-AUTHORIZED SERVICE REPRESENTATIVES FOR SYSTEMS AND EQUIPMENT. HVAC CONTROLS INSTALLERS, AND OTHER MECHANICS TO OPERATE HVAC SYSTEMS AND EQUIPMENT TO SUPPORT AND ASSIST THE TESTING , ADJUSTING AND BALANCING ACTIVITIES.
7. CONTRACTOR SHALL VERIFY QUANTITIES AND LOCATIONS OF BALANCING DEVICES. CONTRACTOR SHALL VERIFY THAT THESE BALANCING DEVICES ARE ACCESSIBLE AND APPROPRIATE FOR BALANCING AND FOR EFFICIENT SYSTEM EQUIPMENT OPERATION PRIOR TO COMMENCEMENT OF WORK..
8. CONTRACTOR SHALL PERFORM TESTING AND BALANCING PROCEDURES IN EACH AIR AND WATER SYSTEM.
9. HVAC SYSTEM AIR AND WATER FLOW RATES SHALL BE WITHIN THE FOLLOWING TOLERANCES:
   A. SUPPLY: PLUS 5 TO PLUS 10 PERCENT
   B. RETURN: PLUS 5 TO PLUS 10 PERCENT
   C. EXHAUST FANS: PLUS 5 TO PLUS 10 PERCENT
   D. EQUIPMENT WITH FANS: PLUS 5 TO PLUS 10 PERCENT
   E. AIR OUTLETS AND INLETS: 0 TO MINUS 10 PERCENT
10. FINAL BALANCING REPORT SHALL INCLUDE THE FOLLOWING:
    A. TEST CONDITIONS FOR FANS AND PUMPS
    B. SYSTEMS DIAGRAMS
    C. AIR CONDITIONING UNIT TEST REPORTS
    D. APPARATUS COIL TEST REPORTS
    E. ELECTRICAL-COIL TEST REPORTS
    F. FAN TEST REPORTS
    G. DUCT TRANSVERSE REPORTS
    H. AIR-TERMINAL DEVICE REPORTS
    I. SYSTEM COIL REPORTS
    J. PUMP TEST REPORTS
11. ADDITIONAL TESTING AND BALANCING SHALL BE MADE AS DIRECTED BY THE DESIGN ENGINEER TO CORRECT UNUSUAL CONDITIONS. ADDITIONAL TESTING WILL NOT EXCEED THREE DAYS DURING THE FIRST SIX MONTHS OF OPERATION.
12. IF INITIAL TESTING AND BALANCING PROCEDURES WERE NOT PERFORMED DURING THE NEAR-PEAK SUMMER AND WINTER CONDITIONS, PERFORM ADDITIONAL TESTING, ADJUSTING DURING NEAR-PEAK SUMMER AND WINTER CONDITIONS.
13. CONTRACTOR TO PROVIDE THREE (3) COPIES OF THE TESTING, ADJUSTING AND BALANCING REPORT FOR REVIEW.

PIPING MATERIAL SCHEDULE

SERVICE	SIZE	MATERIAL	SCHEDULE / TYPE	INSULATION		REMARKS
				TYPE	THICK	
A/C CONDENSATE	ALL	PVC	SCH. 40	NONE	-	--
REFRIGERANT PIPING	ALL	COPPER	TYPE L	FG	1"	--

NOTES:

1. FIBERGLASS PIPE INSULATION: MINERAL OR GLASS FIBERS BONDED WITH A THERMOSETTING RESIN. SEMIRIGID BOARD MATERIAL WITH FACTORY-APPLIED ASJ COMPLYING WITH ASTM C 1393, OR WITH PROPERTIES SIMILAR TO ASTM C 612. NOMINAL DENSITY IS 2.5 LB/CU. FT. OR MORE. THERMAL CONDUCTIVITY (K VALUE) AT 100 DEG. F (55 DEG. C) IS 0.29 BTU X IN./H X SQ.FT. X DEG. F (0.042 W/M X K) OR LESS. ALL SERVICE JACKET (ASJ): WHITE, KRAFT-PAPER, FIBERGLASS-REINFORCED SCRIM WITH ALUMINUM-FOIL BACKING; COMPLYING WITH ASTM C 1136, TYPE MANUFACTURERS; A. CERTAINTEED CORP., B. JOHNS MANVILLE, C. KNAUF INSULATION, D. OWENS CORNING.
2. FLEXIBLE ELASTOMERIC PIPE INSULATION: CLOSED CELL SPONGE OR EXPANDED - RUBBER MATERIALS. COMPLY WITH ASTM C-534, TYPE I FOR TUBULAR MATERIALS. PROVIDE SEALANT COMPATIBLE WITH MATERIAL. MANUFACTURERS: ARMAFLEX BY ARMACELL OR EQUAL.

FLORIDA BUILDING CODE EIGHTH EDITION (2023) ENERGY CONSERVATION COMPLIANCE

THE DESIGN COMPLIES WITH SECTION C401.2 APPLICATION ITEM 3:

THE REQUIREMENTS OF SECTION C402.5, C403.2, C404, C405.2, C405.4, C405.5, C407 AND C408. THE BUILDING ENERGY COST SHALL BE EQUAL TO OR LESS THAN 85 PERCENT OF THE STANDARD REFERENCE DESIGN BUILDING.

MECHANICAL GENERAL NOTES

1. ALL MECHANICAL WORK SHALL MEET ALL THE REQUIREMENTS OF THE FLORIDA BUILDING CODE EIGHTH EDITION 2023, FLORIDA BUILDING CODE EIGHTH EDITION 2023- MECHANICAL, FBC EIGHTH EDITION 2023- ENERGY CONSERVATION, FFPC EIGHTH EDITION- 2023.
2. CONTRACTOR TO VISIT SITE AND VERIFY ALL CLEARANCES BEFORE FABRICATION OF DUCTWORK AND PROVIDE ADDITIONAL OFFSET AND/OR CHANGES IN DUCT SIZES TO MEET FIELD CONDITIONS AND COORDINATE WITH ELECTRICAL, PLUMBING AND FIRE PROTECTION SUBCONTRACTOR BEFORE ANY CONSTRUCTION WORK.
3. PROVIDE EQUIPMENT GUARDS AT ALL EQUIPMENT WITHIN 10 FEET OF A ROOF EDGE OR OPEN SIDE OF WALKING SURFACE THAT IS OVER 30" ABOVE FLOOR GRADE.
4. OUTSIDE AIR INTAKES (ROOFTOP UNITS, GRAVITY ROOF VENTS, LOUVERS) SHALL MAINTAIN A MINIMUM OF 10'-0" FROM ANY EXHAUST OUTLET OR SANITARY VENT.
5. PROVIDE ALL MECHANICAL EQUIPMENT WITH MANUFACTURER'S RECOMMENDED SERVICE AREA CLEARANCES.
6. ALL ROOF TOP UNITS SHALL BE CONSTRUCTED AND INSTALLED TO WITHSTAND LOCAL WIND LOAD DESIGN.
7. DUCT SMOKE DETECTORS SHALL BE FURNISHED BY THE FIRE ALARM CONTRACTOR, INSTALLED IN DUCT BY THE MECHANICAL CONTRACTOR AND WIRED BY THE FIRE ALARM CONTRACTOR. SMOKE DETECTORS SHALL BE INSTALLED IN ACCORDANCE WITH NFPA 72, NATIONAL FIRE ALARM CODE; NFPA 90A, STANDARD FOR INSTALLATION OF AIR-CONDITIONING AND VENTILATING SYSTEMS, FLORIDA BUILDING CODE EIGHTH EDITION 2023 - MECHANICAL AND THE MANUFACTURER'S INSTALLATION INSTRUCTIONS. COORDINATE LOCATION OF SMOKE DETECTORS WITH FIRE ALARM CONTRACTOR. PROVIDE A VISIBLE/AUDIBLE NOTIFICATION PANEL. MAKE: SYSTEM SENSOR RTS2 OR EQUAL, COMPATIBLE WITH BUILDING FIRE ALARM SYSTEM.
8. PLANS AND DIAGRAMS ARE SCHEMATIC ONLY AND SHOULD NOT BE SCALED.
9. PROVIDE EXTERNAL DUCT INSULATION FOR SUPPLY, RETURN AND OUTSIDE AIR DUCTWORK. DUCTWORK INSULATION SHALL BE FOIL FACED FIBERGLASS DUCT WRAP WITH A MINIMUM THERMAL RESISTANCE (R) OF 6.0. INSULATION SHALL HAVE VAPOR BARRIER. INSTALL PER MFR. REQUIREMENTS.
10. COORDINATE CEILING MOUNTED DIFFUSERS, REGISTERS, AND GRILLES AND OTHER CEILING MOUNTED EQUIPMENT WITH OTHER CEILING MOUNTED EQUIPMENT. SEE REFLECTED CEILING PLAN.
11. DUCTWORK, DIFFUSERS, REGISTERS, GRILLES, AND OTHER ITEMS OF THE AIR HANDLING SYSTEM SHALL NOT BE SUPPORTED BY THE CEILING OR CEILING SUSPENSION SYSTEM.
12. CONTRACTOR TO PROVIDE ALL SUPPLEMENTARY STEEL REQUIRED TO SUSPEND MECHANICAL EQUIPMENT & MATERIALS. INSTALLATION OF EQUIPMENT SHALL COMPLY WITH MANUFACTURER'S SPECIFICATIONS AND CLEARANCE REQUIREMENTS FOR SERVICING OF EQUIPMENT
13. VERIFY VOLTAGE REQUIREMENTS WITH ELECTRICAL CONTRACTOR BEFORE ORDERING EQUIPMENT.
14. PROVIDE A TRAP IN ALL CONDENSATE PIPING SERVING AIR HANDLING UNITS AND ROOFTOP UNITS. SLOPE CONDENSATE LINE 1/8" PER FOOT. ALL CONDENSATE DRAIN PIPING SHALL BE PROPERLY SUPPORTED.
15. GUARANTEE; FOR ONE YEAR AFTER DATE OF ACCEPTANCE BY THE OWNER, ALL EQUIPMENT, MATERIALS AND WORKMANSHIP TO BE FREE FROM DEFECT.
16. DO NOT CUT STRUCTURAL MEMBERS WITHOUT PRIOR WRITTEN APPROVAL OF THE STRUCTURAL ENGINEER.
17. FLEXIBLE AND RIGID ROUND DUCT TAKE-OFFS FOR DIFFUSERS SHALL BE THE SAME SIZE AS DIFFUSER NECK. MAXIMUM FLEXIBLE DUCT LENGTH SHALL BE 8'-0". FLEXIBLE DUCT SHALL BE THERMAFLEX TYPE M-KC OR EQUAL. FLEXIBLE DUCT SHALL BE INSULATED FIBERGLASS, R-6, CLASS 1, UL181 LISTED AND COMPLY WITH NFPA 90A AND NFPA 90B.
18. ALL WALL MOUNTED THERMOSTATS AND HUMIDISTATS SHALL BE INSTALLED AT AN ELEVATION OF 48" ABOVE FINISHED FLOOR TO THE TOP UNLESS OTHERWISE NOTED ON DRAWINGS. LOCATION OF THE WALL MOUNTED THERMOSTAT SHALL BE COORDINATED WITH OTHER TRADES FOR A NEAT APPEARANCE. FINAL LOCATION OF THERMOSTAT SHALL BE SUBJECT TO THE APPROVAL OF THE ENGINEER OR HIS REPRESENTATIVE IN THE FIELD.
19. PROVIDE FLEXIBLE NEOPRENE DUCT CONNECTORS ON THE DISCHARGE AND ENTERING SIDES OF ROOFTOP UNITS, AIR HANDLING UNITS, FANS AND OTHER VIBRATING EQUIPMENT TO WHICH DUCTWORK IS ATTACHED.
20. PROVIDE ACCESS DOORS IN HARD CEILINGS OR WALLS REQUIRING ACCESS TO VALVES, FIRE DAMPERS, BALANCING DAMPERS, VOLUME DAMPERS OR OTHER PARTS OF THE SYSTEM WHICH REQUIRE OPERATION OR MAINTANENCE AND ARE LOCATED AT INACCESSIBLE AREAS. MAKE: MILCOR MODEL C FOR CEILING LOCATION. MILCOR MODEL M FOR WALL LOCATION. INSTALL FOR DOWNWARD OPENING IN CEILING LOCATIONS.
21. COORDINATION: CONTRACTOR SHALL COORDINATE ITS CONSTRUCTION OPERATIONS WITH THOSE OF OTHER CONTRACTORS AND ENTITIES TO ENSURE EFFICIENT AND ORDERLY INSTALLATION OF EACH PART OF THE WORK. CONTRACTOR SHALL COORDINATE ITS OPERATIONS WITH OTHER CONTRACTORS OPERATIONS, THAT DEPEND ON EACH OTHER FOR PROPER INSTALLATION, CONNECTION AND OPERATION.
22. REFER TO ARCHITECTURAL DRAWINGS FOR ALL RELATED CONSTRUCTION DETAILS AS APPLICABLE TO THE HVAC SYSTEM. CHASE AND WALL PENETRATIONS INTENDED FOR DUCTWORK AND PIPING SHALL BE VERIFIED WITH ARCHITECTURAL DRAWINGS PRIOR TO INSTALLATION.
23. MECHANICAL EQUIPMENT, DUCTWORK AND PIPING IS SHOWN AT APPROXIMATE LOCATIONS. FIELD MEASURE FINAL DUCTWORK AND PIPING LOCATIONS PRIOR TO FABRICATION AND MAKE ADJUSTMENT AS REQUIRED TO FIT THE DUCTWORK AND PIPING WITHIN THE AVAILABLE SPACE. FIELD VERIFY FINAL LOCATIONS TO INSTALL EQUIPMENT IN ACCORDANCE WITH THE MANUFACTURER'S RECOMMENDATIONS REGARDING SERVICE CLEARANCE AND PROPER AIRFLOW CLEARANCE AROUND EQUIPMENT.
24. WHEN THE INTENT OF THE DRAWINGS AND SPECIFICATIONS IS NOT CLEAR, OR IS CAPABLE OF MORE THAN ONE INTERPRETATION, SUCH MATTERS WILL BE BROUGHT TO THE ATTENTION OF THE ARCHITECT/ENGINEER IN WRITING BEFORE THE SUBMISSION OF BIDS. THE ARCHITECT/ENGINEER SHALL MAKE CORRECTION OR EXPLANATION IN WRITING.
25. PLANS AND SPECIFICATIONS ARE INTENDED AS A GENERAL DESCRIPTION OF THE WORK TO BE PERFORMED. ALL ITEMS NOT SPECIFICALLY MENTIONED OR SHOWN, BUT NECESSARY FOR THE COMPLETION OF THE INSTALLATION, SHALL BE FURNISHED AND INSTALLED BY THIS CONTRACTOR. THIS CONTRACTOR SHALL THOROUGHLY ACQUAINT HIMSELF WITH THE MECHANICAL, ARCHITECTURAL, STRUCTURAL AND ELECTRICAL PLANS BEFORE SUBMITTING HIS FINAL BID. NO ADDITIONAL COMPENSATION WILL BE ALLOWED DUE TO THE CONTRACTOR'S FAILURE TO FAMILIARIZE HIMSELF/ HERSELF WITH THE PLANS.
26. CONTRACTOR SHALL ENGAGE A FACTORY-AUTHORIZED SERVICE REPRESENTATIVE FOR START-UP TO INSPECT, TEST AND ADJUST FIELD-ASSEMBLED COMPONENTS AND EQUIPMENT INSTALLATION, INCLUDING CONNECTIONS AND PERFORM THE FOLLOWING FIELD TESTS AND INSPECTIONS:
    1. LEAK TEST: AFTER INSTALLATION, CHARGE SYSTEM AND TEST FOR LEAKS. REPAIR LEAKS AND RETEST UNTIL NO LEAKS EXIST.
    2. OPERATIONAL TEST: AFTER ELECTRICAL CIRCUITRY HAS BEEN ENERGIZED, START UNITS TO CONFIRM PROPER MOTOR ROTATION AND UNIT OPERATION.
    3. TEST AND ADJUST CONTROLS AND SAFETIES. REPLACE DAMAGED AND MALFUNCTIONING CONTROLS AND EQUIPMENT.
    4. REPORT TESTING RESULTS IN WRITTEN REPORT.

SUBMITTALS AND SUBSTITUTIONS

1. CONTRACTOR SHALL SUBMIT THE FOLLOWING EQUIPMENT FOR REVIEW PRIOR TO ORDERING AND INSTALLING
   A. AIR HANDLING UNITS AND AIR COOLED CONDENSERS
   B. EXHAUST FANS
   C. DUCT WORK
   D. DUCT CONSTRUCTION STANDARDS
2. PROCESSING TIME: ALLOW 10 WORKING DAYS FOR REVIEW OF EACH SUBMITTAL. ALLOW ADDITIONAL TIME IF COORDINATION WITH SUBSEQUENT SUBMITTALS IS REQUIRED. ENGINEER WILL ADVISE CONTRACTOR WHEN A SUBMITTAL BEING PROCESSED MUST BE DELAYED FOR COORDINATION.
3. SUBMITTALS: PLACE A PERMANENT LABEL OR TITLE BLOCK ON EACH SUBMITTAL ITEM FOR IDENTIFICATION. INDICATE NAME OF FIRM OR ENTITY THAT PREPARED EACH SUBMITTAL ON LABEL OR TITLE BLOCK. PROVIDE A SPACE BESIDE TITLE BLOCK TO RECORD CONTRACTOR'S REVIEW AND APPROVAL MARKINGS AND ACTION TAKEN BY ENGINEER. INCLUDE THE FOLLOWING INFORMATION FOR PROCESSING AND RECORDING ACTION TAKEN:
   A. PROJECT NAME.
   B. DATE.
   C. NAME OF ENGINEER.
   D. NAME OF CONTRACTOR.
   E. NAME OF SUBCONTRACTOR.
   F. NAME OF SUPPLIER.
   G. NAME OF MANUFACTURER.
   H. DRAWING NUMBER AND DETAIL REFERENCES, AS APPROPRIATE.
   I. LOCATION WHERE PRODUCT IS TO BE INSTALLED, AS APPROPRIATE.
4. SUBMIT ELECTRONIC SUBMITTALS VIA EMAIL AS PDF ELECTRONIC FILES.
5. PAPER SUBMITTALS: SUBMIT THREE PAPER COPIES OF EACH SUBMITTAL UNLESS OTHER WISE INDICATED. ENGINEER WILL RETURN TWO COPIES.
6. COLLECT SUBMITTAL DATE INFORMATION INTO A SINGLE SUBMITTAL FOR EACH ELEMENT OF CONSTRUCTION AND TYPE OF PRODUCT OR EQUIPMENT. MARK EACH COPY OF EACH SUBMITTAL TO SHOW WHICH PRODUCTS AND OPTIONS ARE APPLICABLE. INCLUDE THE FOLLOWING INFORMATION, AS APPLICABLE:
   A. MANUFACTURER'S CATALOG CUTS.
   B. MANUFACTURER'S PRODUCT SPECIFICATIONS.
   C. STATEMENT OF COMPLIANCE WITH SPECIFIED REFERENCED STANDARDS.
   D. NOTATION OF COORDINATION REQUIREMENTS.
   E. WIRING DIAGRAMS SHOWING FACTORY-INSTALLED WIRING.
   F. PRINTED PERFORMANCE CURVES.
   G. OPERATIONAL RANGE DIAGRAMS.
   H. CLEARANCES REQUIRED TO OTHER CONSTRUCTION, IF NOT INDICATED ON ACCOMPANYING SHOP DRAWINGS.
7. CONTRACTOR SHALL REVIEW EACH SUBMITTAL AND CHECK FOR COORDINATION WITH OTHER WORK OF THE CONTRACT AND FOR COMPLIANCE WITH THE CONTRACT DOCUMENTS. NOTE CORRECTIONS AND FIELD DIMENSIONS. MARK WITH APPROVAL STAMP BEFORE SUBMITTING TO ENGINEER. APPROVAL STAMP: STAMP SHALL STATE THAT SUBMITTAL HAS BEEN REVIEWED, CHECKED, AND APPROVED FOR COMPLIANCE WITH THE CONTRACT DOCUMENTS AND INITIALLED AND DATED BY CONTRACTOR.
8. ENGINEER WILL REVIEW EACH SUBMITTAL, MAKE MARKS TO INDICATE CORRECTIONS OR REVISIONS REQUIRED, AND RETURN IT. ENGINEER WILL STAMP EACH SUBMITTAL WITH AN ACTION STAMP AND WILL MARK STAMP APPROPRIATELY TO INDICATE ACTION.
9. ENGINEER WILL NOT REVIEW SUBMITTALS THAT DO NOT BEAR CONTRACTOR'S APPROVAL STAMP AND INITIALS AND WILL RETURN THEM WITHOUT ACTION. INCOMPLETE SUBMITTALS ARE UNACCEPTABLE, WILL BE CONSIDERED NONRESPONSIVE, AND WILL BE RETURNED FOR RESUBMITTAL WITHOUT REVIEW. SUBMITTALS NOT REQUIRED BY THE CONTRACT DOCUMENTS MAY NOT BE REVIEWED AND MAY BE DISCARDED
10. SUBSTITUTIONS
    A. SUBSTITUTION OFFERS OWNER A SUBSTANTIAL ADVANTAGE IN COST, TIME, ENERGY CONSERVATION, OR OTHER CONSIDERATIONS.
    B. SUBSTITUTION DOES NOT REQUIRE EXTENSIVE REVISIONS TO THE CONTRACT DOCUMENTS. CONTRACTOR SHALL COMPENSATE ENGINEER FOR ANY REDESIGN AND EVALUATION SERVICES INCLUDING CHANGES REQUIRED BY AUTHORITY HAVING JURISDICTION.
    C. SUBSTITUTION WILL NOT ADVERSELY AFFECT CONSTRUCTION SCHEDULE.
    D. SUBSTITUTION HAS RECEIVED NECESSARY APPROVALS OF AUTHORITIES HAVING JURISDICTION.
    E. SUBSTITUTION HAS BEEN COORDINATED WITH OTHER PORTIONS OF THE WORK.
    F. SUBSTITUTION PROVIDES SPECIFIED WARRANTY.
    G. SUBSTITUTION HAS BEEN COORDINATED WITH OTHER PORTIONS OF THE WORK, AND IS ACCEPTABLE TO ALL CONTRACTORS INVOLVED.
    H. CONTRACTOR SHALL ASSUME ANY ADDITIONAL CONSTRUCTION COSTS AS A RESULT OF THE SUBSTITUTION.

DUCT CONSTRUCTION NOTES

1. SUPPLY AIR, RETURN AIR, OUTSIDE AIR, AND EXHAUST AIR DUCTWORK SHALL BE GALVANIZED SHEET METAL, EXCEPT WHERE INDICATED. METALLIC DUCTS SHALL BE CONSTRUCTED AND INSTALLED PER THE FLORIDA BUILDING CODE EIGHTH EDITION 2023 - MECHANICAL AND THE 2020 EDITION OF THE SMACNA HVAC DUCT CONSTRUCTION STANDARDS - METAL AND FLEXIBLE MANUAL.
2. METAL DUCT STATIC PRESSURE CLASSIFICATION:
   SUPPLY AIR DUCT: 2" W.G.
   RETURN AIR DUCT: 2" W.G. (NEGATIVE)
   EXHAUST AIR DUCT: 2" W.G. (NEGATIVE)
3. SEAL ALL TRANSVERSE JOINTS AND LONGITUDINAL SEAMS PER THE FLORIDA BUILDING CODE EIGHTH EDITION 2023 - ENERGY CONSERVATION TABLE C403.2.9.2 AND THE 2020 EDITION OF SMACNA HVAC DUCT CONSTRUCTION STANDARDS - METAL AND FLEXIBLE.
4. CROSS-BREAK DUCT SURFACES 19" THROUGH 60" USE ANGLE REINFORCING FOR DUCT SIZES OVER 60".
5. ALL METAL LONGITUDINAL SEAMS SHALL BE PITTSBURGH OR OTHER SMACNA LISTED SEAMS. DO NOT USE BUTTON PUNCH SNAPBACK SEAMS.
6. SUSPEND METAL DUCTWORK NOT EXCEEDING 30" LONGEST SIDE. AT EVERY JOINT (NOT TO EXCEED 10'-0") USING 1"x 18 GAUGE GALVANIZED STRAPS ATTACHED TO BOTTOM AND SIDE OF DUCT.
7. SUSPEND METAL DUCTWORK, EXCEEDING 30" LONGEST SIDE, AT MAXIMUM 8'-0" INTERVALS USING ANGLES AND RODS.
8. SUPPORT DUCTWORK AND EQUIPMENT FROM STRUCTURAL MEMBER. ATTACHMENT TO ROOF DECK IS NOT ACCEPTABLE.
9. DUCT SIZES MUST BE VERIFIED FOR CLEARANCES AT THE JOB SITE PRIOR TO FABRICATION. DIMENSIONS MAY BE CHANGED TO ACCOMMODATE CONSTRUCTION. SUBMIT ALL MODIFICATION TO DESIGN ENGINEER FOR APPROVAL.
10. DUCT TRANSITIONS SHALL BE CONSTRUCTED WITH SLOPE OF 1/4.
11. TURNING VANES SHALL BE PROVIDED IN ALL SUPPLY DUCT RECTANGULAR ELBOWS WITH ANGLES BETWEEN 15 DEGREES AND LESS THAN 90 DEGREES PER THE SMACNA HVAC DUCT CONSTRUCTION STANDARDS MANUAL.
12. DUCT DIMENSIONS SHOWN ON DRAWING ARE CLEAR INSIDE DIMENSIONS. WHERE DUCT LINER IS SHOWN INCREASE METAL DUCT SIZE TO ALLOW FOR DUCT LINER.
13. UNLESS OTHERWISE NOTED, INSTALL DUCTWORK AS HIGH AS POSSIBLE, TIGHT TO BOTTOM OF STRUCTURE. COORDINATE DUCT ELEVATION WITH STORM LEADERS, WATER PIPING, SANITARY DRAINS ,MAJOR ELECTRICAL CONDUIT, LIGHTING FIXTURES, ETC..

SUBMITTED FOR DESIGN DEVELOPMENT - NOT FOR CONSTRUCTION

HALL & OGLE ARCHITECTS, INC.
208 MAGNOLIA AVENUE
DAYTONA BEACH, FLORIDA 32114
PH (386) 255-6163
FAX (386)257-5650
AA-C000925
www.hoarchitects.com

DELOSE O'NEAL ENGINEERING
PO. BOX 530247
DeBary, FL 32753
P (407) 764-2813
C (321) 277-4128
CONSULTANTS

10.26.2023

REVISIONS

NO.	DATE	DESCRIPTION
	10.26.23	CONFORMED SET

FORESTRY MANAGEMENT
STORAGE BARN
CITY OF PORT ORANGE
4655 CITY CENTER CIRCLE
PORT ORANGE, FL

ARCH/ENGR OF RECORD
MINDY N. O'NEAL
FL# 69779

DESIGNED BY	DRAWN BY
MNO	KMO
ISSUE DATE	AE PROJECT NUMBER
18-JUNE-2024	2315

SHEET TITLE
MECHANICAL
GENERAL INFORMATION

DRAWING NO.
M0.1

FAN SCHEDULE

MARK	SERVICE	CFM	EXT. STATIC PRESSURE (IN. WATER)	FAN TYPE	DRIVE	SONES	HP (WATTS)	RPM	V/Ø	MANUFACTURER	MODEL	NOTES
EF-1	SHOP	1,000	0.5	CENTRIFUGAL	DIRECT	11.9	1/4	1643	120/1	GREENHECK	G-099-VG	1 - 4
EF-2	SHOP	1,000	0.5	CENTRIFUGAL	DIRECT	11.9	1/4	1643	120/1	GREENHECK	G-099-VG	1 - 4

NOTES:

1. PROVIDE INTEGRAL DISCONNECT SWITCH.
2. PROVIDE CONTROL BY MANUAL ON/OFF SWITCH. COORDINATE WITH ELECTRICAL DRAWINGS FOR LOCATION OF SWITCH.
3. PROVIDE INTEGRAL BACKDRAFT DAMPER.
4. INTERLOCK EXHAUST FAN CONTROLS WITH INTAKE AIR LOUVERS.

MINI-SPLIT SYSTEM AIR CONDITIONING UNIT SCHEDULE

MARK	AREA SERVED	NOMINAL TONS	FAN		MCA	MOCP	WEIGHT (LBS.)	COOLING CAPACITY		SEER2	EQUAL TO		NOTES
			CFM	V/Ø				TC (MBH)	SC (MBH)		MFG.	MODEL	
AC-1	OFFICE	1.0	317	230/1	1.0	15	25	-	-	-	LG	LSN121HSV5	SEE NOTES
ACU-1	OFFICE	1.0	-	230/1	19	30	100	12.0	9.2	22.0	LG	LSU121HSV5	SEE NOTES

NOTES:
1. PROVIDE UNITS WITH FACTORY THERMOSTAT, SINGLE POINT ELECTRICAL CONNECTION.
2. PROVIDE 5 MINUTE ANTI CYCLE TIMER.
3. PROVIDE WITH FACTORY INSTALLED DISCONNECT.
4. PROVIDE UNIT WITH HAIL GUARD.
5. PROVIDE UNIT WITH CONDENSATE PUMP.
6. CFM BASED ON MEDIUM FAN SPEED.

OUTSIDE AIR CALCULATION

AREA SERVED	AREA (SQFT)	# PEOPLE	CFM / PERSON	PEOPLE OUTSIDE AIR (CFM)	CFM /SQFT	SQ.FT. OUTSIDE AIR (CFM)	TOTAL CFM CALCULATED	CFM SUPPLIED
OFFICE	95	2	5	10	0.06	6	16	20
						TOTAL	16	20

PER TABLE 403.3.1.1 - 2023 FLORIDA BUILDING CODE, 8TH EDITION - MECHANICAL
BALANCE TO OUTSIDE QUANTITIES AIR SHOWN.

LOUVER SCHEDULE

MARK	SERVICE	SIZE		BIRD SCREEN	DESIGN EQUIPMENT	REMARKS
		LENGTH (IN)	HEIGHT (IN)			
L-1	SEE PLANS	20	26	YES	GREENHECK EHV-550	1 - 3
L-2	SEE PLANS	20	26	YES	GREENHECK EHV-550	1 - 3

NOTES:

1. PROVIDE HORIZONTAL, DRAINABLE ALUMINUM, BAKED ENAMEL FINISH.
2. MATCH COLOR OF LOUVER TO ADJACENT WALL COLOR.
3. LOUVER TO BE AMCA 540 AND 550 LISTED.
4. INTERLOCK INTAKE AIR LOUVER CONTROLS WITH ASSOCIATED EXHAUST FAN.

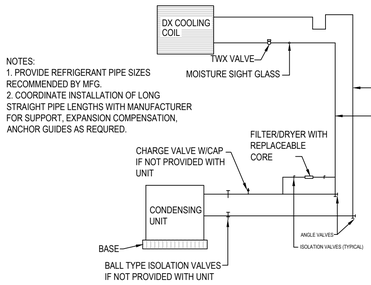

NOTES:
1. PROVIDE REFRIGERANT PIPE SIZES RECOMMENDED BY MFG.
2. COORDINATE INSTALLATION OF LONG STRAIGHT PIPE LENGTHS WITH MANUFACTURER FOR SUPPORT, EXPANSION COMPENSATION, ANCHOR GUIDES AS REQURED.

NOTE:
PIPING LAYOUT IS DIAGRAMMATIC. CONTRACTOR SHALL PROVIDE PIPING, ACCESSORIES, VALVES, ETC. TO ACCOMMODATE LAYOUT IN FIELD.

1 Refrigerant Piping Schematic Detail
SCALE: NOT TO SCALE

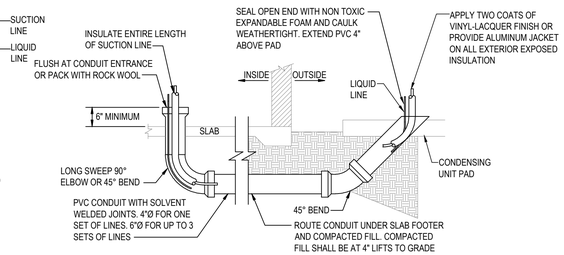

NOTE:
ALL REFRIGERANT LINES INSTALLED UNDERGROUND/BELOW GRADE SHALL BE PRESSURE TESTED TO A MINIMUM OF 300 PSI AND SHALL BE DOCUMENTED.

2 Underground Refrigerant Lines Detail
SCALE: NOT TO SCALE

CONDENSATE DRAIN PIPING DIMENSIONS:

A = FULL SIZE OF UNIT DRAIN CONNECTION
B ≥ 1-1/2 TIMES FAN SUCTION STATIC PRESSURE
C ≥ FAN DISCHARGE STATIC PRESSURE PLUS 1/2 INCH

COORDINATE MOUNTING/CURB HEIGHT AS REQUIRED TO PROVIDE PROPER CONDENSATE DRAINAGE.

NOTE:
CONDENSING UNIT SUPPORT TO BE PROVIDED BY G.C. CONTRACTOR HAS OPTION TO USE APPROVED MANUFACTURER RECOMMENDE TIE-DOWN CLIPS.

3 Condensing Unit Tie Down Detail
SCALE: NOT TO SCALE

4 AHU Condensate Drain Trap Detail
SCALE: NOT TO SCALE

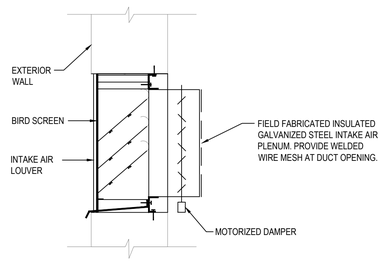

1. INSTALL LOUVER PER MANUFACTURER'S REQUIREMENTS.
2. COORDINATE FRAME TYPE WITH WALL CONSTRUCTION TYPE.
3. PROVIDE MOTORIZED DAMPER.

5 Drywell Condensate Disposal Detail
SCALE: NOT TO SCALE

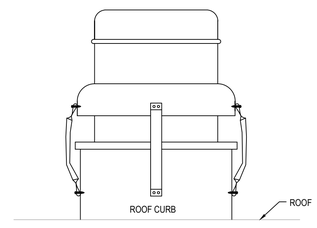

NOTE:
PROVIDE TIE-DOWNS OR EQUIVALENT ENGINEERED TIE-DOWN SOLUTION THAT MEETS OR EXCEEDS THE REQUIRED PROJECT WIND DESIGN CATEGORY III CRITERIA FOR THE SPECIFIC EQUIPMENT MAKES AND MODELS EMPLOYED. SIZE QUANTITY AND PLACEMENT OF TIE-DOWNS SHALL BE AS REQUIRED BY THE TIE-DOWN SUPPLIER FOR EACH PIECE OF EQUIPMENT.

6 Intake Air Louver Detail
SCALE: NOT TO SCALE

7 Exhuast Fan Tie Down Detail
SCALE: NOT TO SCALE

SUBMITTED FOR DESIGN DEVELOPMENT - NOT FOR CONSTRUCTION

HALL & OGLE ARCHITECTS, INC.
208 MAGNOLIA AVENUE
DAYTONA BEACH, FLORIDA 32114
www.hoarchitects.com
PH (386) 255-6163
FAX (386)257-5650
AA-C000925

DELOSE O'NEAL ENGINEERING
PO. BOX 530247
DeBary, FL 32753
P (407) 764-2813
C (321) 277-4128
CONSULTANTS

10.26.2023

REVISIONS

NO.	DATE	DESCRIPTION
	10.26.23	CONFORMED SET

DOCUMENT HISTORY

FORESTRY MANAGEMENT
STORAGE BARN
CITY OF PORT ORANGE
4655 CITY CENTER CIRCLE
PORT ORANGE, FL

ARCH/ENGR OF RECORD
MINDY N. O'NEAL
FL# 69779

DESIGNED BY	DRAWN BY
MNO	KMO
ISSUE DATE	AE PROJECT NUMBER
18-JUNE-2024	2315

SHEET TITLE
MECHANICAL SCHEDULES AND DETAILS

DRAWING NO.
M0.2

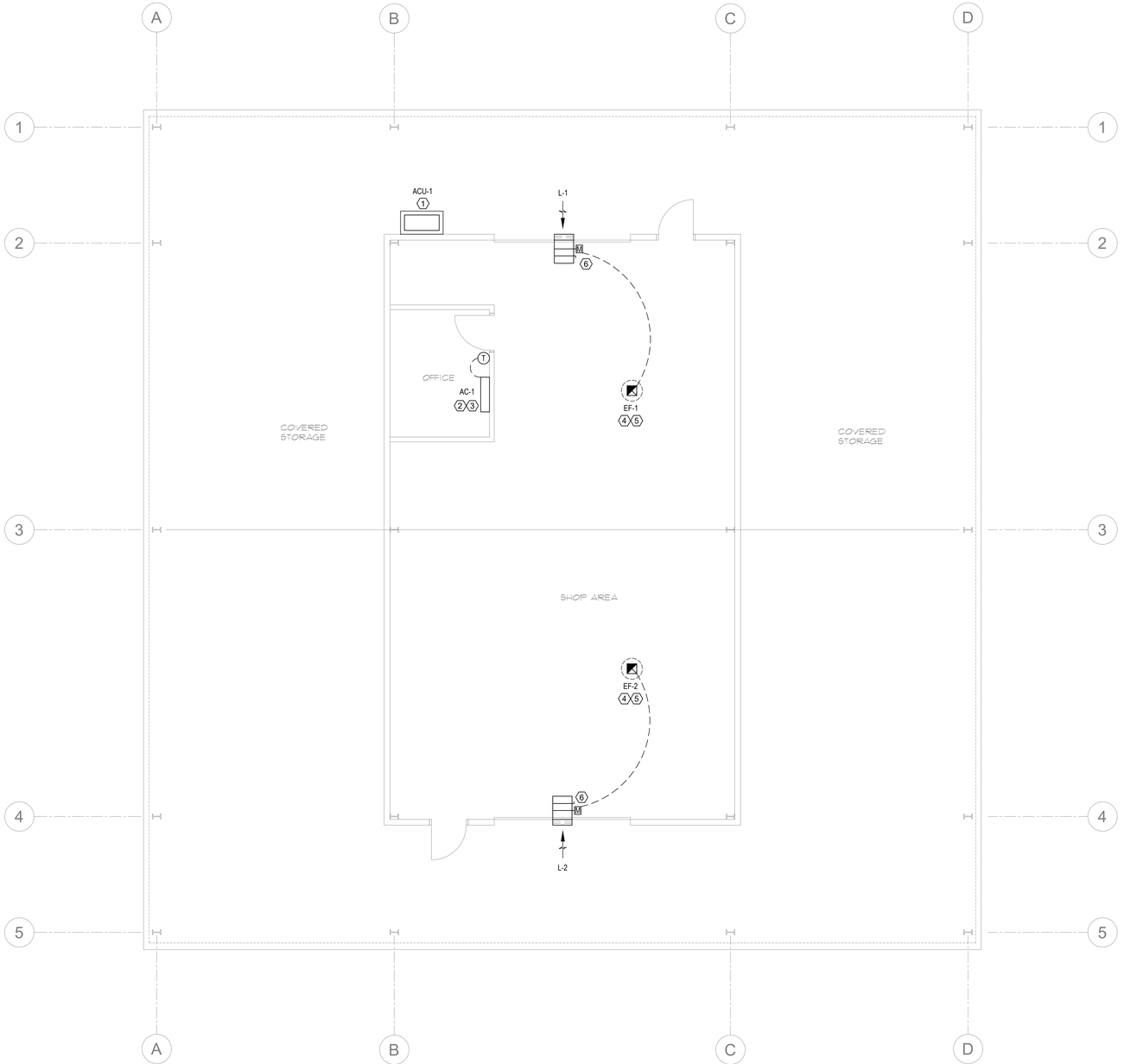

MECHANICAL FLOOR PLAN
SCALE: 3/16"=1'-0"

1 / M1.1

N

GENERAL PLAN NOTES:

1. CONTRACTOR SHALL FIELD VERIFY ALL EXISTING CONDITIONS WITHIN THE AREA OF WORK PRIOR TO CONSTRUCTION.
2. COORDINATE EXACT LOCATIONS OF MECHANICAL EQUIPMENT WITH ALL DISCIPLINES AND MAINTAIN REQUIRED CLEARANCES.
3. INSTALL FLEXIBLE CONNECTIONS BETWEEN ALL DUCTWORK AND MECHANICAL UNITS.
4. DUCTWORK CONNECTIONS TO EQUIPMENT TO BE SIZE OF UNIT OPENING.
5. PROVIDE BRANCH DUCT CONNECTIONS PER DETAIL ON SHEET M5.1.
6. COORDINATE ALL BRANCH DUCT LOCATIONS WITH STRUCTURE.

MECHANICAL PLAN KEY NOTES:

1. PROVIDE NEW CONCRETE HOUSEKEEPING PAD.CONTRACTOR TO VERIFY EXACT LOCATION AND COORDINATE WITH ALL DISCIPLINES.
2. ROUTE CONDENSATE DRAIN PIPING TO EXTERIOR DRYWELL.
3. ROUTE REFRIGERANT PIPING TO ASSOCIATED CONDENSING UNIT AT THE BUILDING EXTERIOR. REFER TO REFRIGERANT PIPING SCHEMATIC DETAIL ON MECHANICAL DETAIL SHEET. COORDINATE EXACT LOCATION WITH ARCHITECTURAL PLANS.
4. COORDINATE EXACT LOCATION OF MECHANICAL UNITS WITH STRUCTURE. REFER TO TIE-DOWN DETAIL ON MECHANICAL DETAIL SHEET FOR EQUIPMENT INSTALLATION. COORDINATE WITH MANUFACTURER'S RECOMMENDATIONS.
5. EXHAUST AIR TO MAINTAIN A MINIMUM OF 10'-0" FROM AIR INTAKES.
6. INTERLOCK MOTORIZED DAMPER WITH ASSOCIATED EXHAUST FAN CONTROLS. PROVIDE WELDED WIRE MESH AT DUCT OPENING.

SUBMITTED FOR DESIGN DEVELOPMENT - NOT FOR CONSTRUCTION

GRAPHIC SCALE
12" 0 3' 6' 9' 12' 15'
3/16"=1'-0"

HALL & OGLE ARCHITECTS, INC.
208 MAGNOLIA AVENUE
DAYTONA BEACH, FLORIDA 32114
www.hoarchitects.com
PH (386) 255-6163
FAX (386)257-5650
AA-C000925

DELOSE O'NEAL ENGINEERING
PO. BOX 530347
DeBary, FL 32753
P (407) 766-2813
C (321) 277-4128
CONSULTANTS

10.26.2023

REVISIONS
DOCUMENT HISTORY

NO.	DATE	DESCRIPTION
	10.26.23	CONFORMED SET

FORESTRY MANAGEMENT STORAGE BARN
CITY OF PORT ORANGE
4655 CITY CENTER CIRCLE
PORT ORANGE, FL

ARCH/ENGR OF RECORD
MINDY N. O'NEAL
FL# 69779

DESIGNED BY	DRAWN BY
MNO	KMO
ISSUE DATE	AE PROJECT NUMBER
18-JUNE-2024	2315

SHEET TITLE
MECHANICAL FLOOR PLAN

DRAWING NO.
M1.1

EXISTING PARKING

DRAIN FIELD

SEPTIC TANK

RIPRAP

EXIST PUMPHOUSE

SEE ENLARGED DETAIL

4-#2/0; #6G IN 2" C.

NEW STORAGE BUILDING

SEE SHEET E-02

EXISTING STORAGE TANK

N07°15'16"W 188.03'

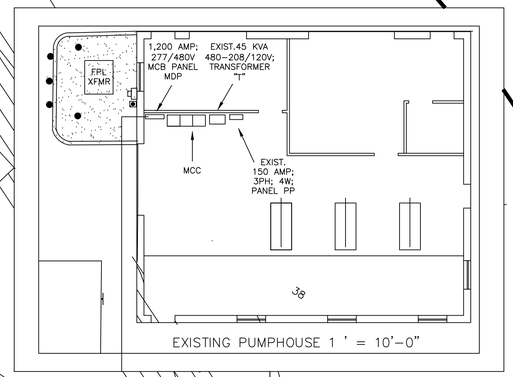

EXISTING PUMPHOUSE 1 ' = 10'-0"

DETAIL OF EXIST. PUMPHOUSE

SCALE : 1" = 10'

ELECTRICAL SITE PLAN

SCALE : 1" = 20'

N

JOHN M. PATTERSON, P.E.
ELECTRICAL CONSULTANT
1291 JOHN ANDERSON DR.
ORMOND BEACH, FL 32176
386 441-2382
FL. REG. PE # 54181

HALL & OGLE ARCHITECTS, INC.
208 MAGNOLIA AVENUE
DAYTONA BEACH, FLORIDA 32114
www.hoarchitects.com
PH (386) 255-6163
FAX (386)257-5650
AA-C000925

REVISIONS

NO.	DATE	DESCRIPTION

DOCUMENT HISTORY

FORESTRY MANAGEMENT STORAGE BARN
CITY OF PORT ORANGE

4655 CITY CENTER CIRCLE
PORT ORANGE, FL

ARCH/ENGR OF RECORD
JOHN E. HALL AR0010727
DAVID D. OGLE AR93986

DESIGNED BY	DRAWN BY
DO/JMP	JB/JMP
ISSUE DATE	AE PROJECT NUMBER
18-JUN-2024	2315

SHEET TITLE
ELECTRICAL SITE PLAN

DRAWING NO.
E-01

GENERAL PROJECT WIRING NOTES

1. CONNECT EXIT/EMERGENCY LIGHTING AND NIGHT LIGHTS AHEAD OF LOCAL SWITCHING.

2. BRANCH CIRCUITS SHARING COMMON NEUTRALS IN A SINGLE RACEWAY SHALL HAVE BREAKER TIES INSTALLED. IN NO CASE MAY MORE THAN 3-CIRCUITS SHARE A COMMON NEUTRAL.

3. LIGHT FIXTURES WEIGHTING LESS THAN 10 POUNDS SHALL HAVE ONE 12 GAUGE HANGER WIRE CONNECTED FROM THE FIXTURE TO THE STRUCTURE ABOVE. LIGHT FIXTURES WEIGHTING MORE THAN 10 POUNDS SHALL HAVE TWO 12 GAUGE WIRES ATTACHED AT OPPOSING CORNERS OF THE LIGHT FIXTURE.

4. ALL WIRING BASED ON THWN/THHN COPPER, UNLESS NOTED OTHERWISE (AL). ALUMINUM CONDUCTORS MAY BE SUBSTITUTED ABOVE 100 AMPS PROVIDED ADJUSTMENTS IN CONDUCTOR AND CONDUIT SIZES ARE MADE AS PER NEC REQUIREMENTS.

5. ALL WORK IN ACCORDANCE WITH FBC (SEVENTH EDITION) AND NEC 2020 EDITION. ALL BRANCH CONDUCTORS SHALL BE SIZED FOR MAXIMUM VOLTAGE DROP OF 3% AT DESIGN LOAD PER FBC-ENGERGY CONSERVATION C405.7.3.2. FEEDER VOLTAGE DROP SIZED FOR 2% PER FBC-ENGERY CONSERVATION C405.7.3.1.

6. MINIMUM WIRING SIZE IS THWN/THHN #12. MC CABLE PERMITTED ON BRANCH CIRCUITS OF WIRE SIZE #12 AND #10.

7. DIRECT BURIAL RACEWAY TO BE SCHEDULE 80 PVC. RACEWAY EMBEDDED IN CONCRETE SHALL BE SCHEDULE 40 PVC. EXPOSED RACEWAY SHALL BE EMT AND RACEWAY WITHIN WALL AND CEILINGS SHALL BE EMT OR, IF #10 AWG OR SMALLER, MC CABLE.

8. CIRCUIT LINES ARE INTENDED TO INDICATE DEVICES ON A SINGLE CIRCUIT, AS WELL AS INTENDED SWITCHING OF LIGHTS, BUT NOT SEQUENCE OF WIRING.

ELECTRICAL PLAN NOTES
1. PROVIDE 2 EACH, EMPTY 2" PVC CONDUITS WITH PULL STRINGS FROM OFFICE TO EXISTING PUMP HOUSE FOR USE BY OWNER'S LOW VOLTAGE CONTRACTOR

ELECTRICAL LEGEND

○	Ceiling surface
▭	Lay-in Fixture fixture
⊖	Duplex receptacle
⊖ GFI	Duplex receptacle with ground fault circuit interrupter
⊖ WP	Duplex receptacle in weatherproof enclosure
$	Single pole switch
$3	Three way switch
□	Disconnect switch
PE	Photoelectric cell
	Equipment connection
———	Circuit concealed in ceiling or wall
— — —	Circuit concealed in floor or ground
◄———	Home run to panel. Any without further designation indicates a 2 wire circuit.

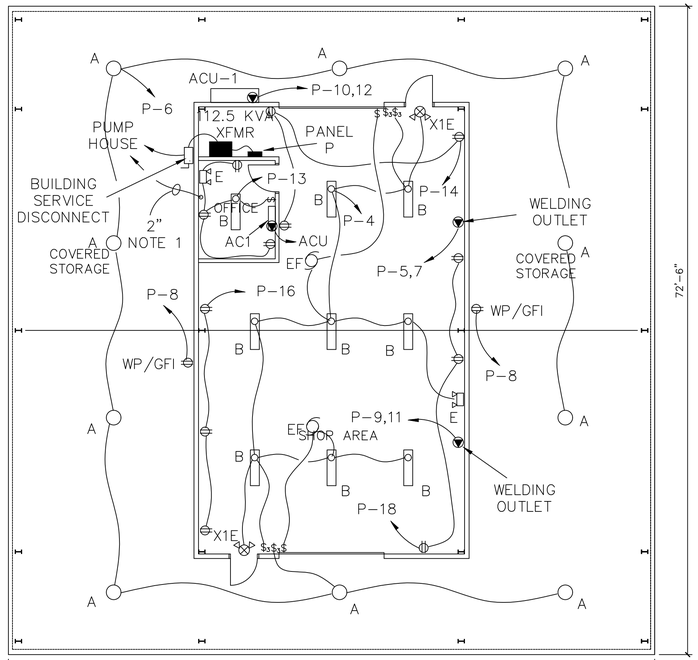

FLOOR PLAN

SCALE: w"= 1'-0"

N

LIGHTING FIXTURE SCHEDULE

TYPE	MANUFACTURER	CATALOG NUMBER	LAMPS	MOUNTING
A	THIS EQUIPMENT IS NEW		INCL	LED HIBAY
B			INCL	LINEAR LED WRAPAROUND
E			INCL	EGRESS WITH BATTERY
X1E			INCL	EXIT COMBO WITH BATTERY

PANEL: P

MFG. SIEMENS SQ D OR VOLTAGE 120/208 PHASE 3 WIRE 4

CAT. VARIES AMPS. 400 SYM. A.I.C. (I.E.R.) 10,000

MOUNT SURFACE MAIN LUGS ONLY GRD. BUS X

CT	DESCRIPTION	POLE	AMPS	WIRE	COND	ØA	ØB	ØC
1,3	SPARE	2	50	–	–			
5,7	WELDING OUTLET	2	50	#6	1"			
9,11	WELDING OUTLET	2	50	#6	1"			
2	OFFICE	1	20	#12	1/2"			
4	LIGHTS	1	20	#12	1/2"			
6	OUTSIDE LTS	1	20	#10	3/4"			
8	WP/GFI OUTLETS	1	20	#10	3/4"			
10,12	IDU/ODU	2	30	#10	3/4"			
13	OFFICE	1	20	#12	1/2"			
14,16,18	OUTLETS	1	20	#12	1/2"			
15,17,19	SPARE	1	20	–	–			
15,17,19	SPARE	1	20					
20-30	PREPARED SPACE							

SERVICE RISER NOTES
1. EXISTING PUMPHOUSE HAS EXCESS ELECTRICAL CAPACITY AS ONLY A PORTION OF THE THEN-PLANNED PUMPING CAPACITY WAS INSTALLED. EXISTING MAIN DISTRIBUTION PANEL "MDP" PANEL HAS FIVE BLANK SPACES. CONTRACTOR TO INSTALL ONE SQUARE D, 175 AMP MOLDED CASE 3-POLE BREAKER IN ONE OF THE SPACES. BREAKER TO HAVE SAME AIC AS EXISTING BREAKERS IN MDP. LABEL BREAKER AS EQUIPMENT STORAGE BUILDING, AND REVISE PANEL DIRECTORY.

2. IN LOCATION SHOWN IN PLAN, INSTALL ENCLOSED (3R) 175 AMP BREAKER AND LABEL AS "BUILDING SERVICE DISCONNECT".

3. STEP-DOWN TRANSFORMER TO BE THREE PHASE, 112.5 KVA, DRY TYPE, DELTA-WYE; 480 TO 208/120 VOLTS, ALUMINUM WINDING

4. PANEL P TO BE 400 AMP, 120/208 VOLT 3-PHASE 4-WIRE MLO PANEL IN NEMA 1, SURFACE-MOUNT ENCLOSURE. SEE PANEL SCHEDULE THIS SHEET FOR ADDITIONAL INFORMATION AND PROPOSED CIRCUITING. PROVIDE PANEL DIRECTORY UPON COMPLETION OF WORK.

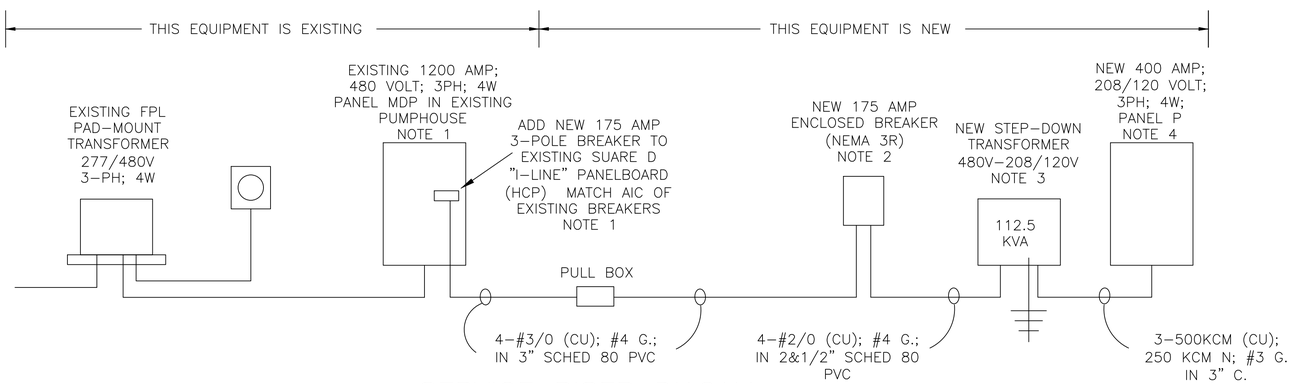

SERVICE RISER DIAGAM

JOHN M. PATTERSON, P.E.
ELECTRICAL CONSULTANT
1291 JOHN ANDERSON DR.
ORMOND BEACH, FL 32176
386 441-2382
FL. REG. PE # 54181

HALL & OGLE ARCHITECTS, INC.
208 MAGNOLIA AVENUE
DAYTONA BEACH, FLORIDA 32114
PH (386) 255-6163
FAX (386)257-5650
AA-C000925
www.hoarchitects.com

REVISIONS

NO.	DATE	DESCRIPTION

DOCUMENT HISTORY

FORESTRY MANAGEMENT
STORAGE BARN
CITY OF PORT ORANGE
4655 CITY CENTER CIRCLE
PORT ORANGE, FL

ARCH/ENGR OF RECORD
JOHN E. HALL AR0010727
DAVID D. OGLE AR93986

DESIGNED BY	DRAWN BY
DO/JMP	JB/JMP
ISSUE DATE	AE PROJECT NUMBER
18-JUN-2024	2315

SHEET TITLE
ELECTRIAL PLAN AND SCHEDULES

DRAWING NO.
E-02

FORESTRY DEPARTMENT
STORAGE BARN
CITY OF PORT ORANGE

PROJECT MANUAL
100% CONSTRUCTION DOCUMENTS

June 18, 2024

OWNER: CITY OF PORT ORANGE
1395 Dunlawton Ave.
Port Orange, Florida 32129
(386) 506-5851

ARCHITECTS: HALL & OGLE ARCHITECTS, INC.
208 Magnolia Avenue
Daytona Beach, Florida 32114
(386) 255-6163

ENGINEERS: ZEV COHEN & ASSOCIATES, INC. - CIVIL
300 Interchange Blvd., Suite C
Ormond Beach, Florida 32174
(386) 872-7794

MS STRUCTURAL ENGINEERS
400 S. Atlantic Avenue
Ormond Beach, Florida 32176
(407) 275-3050

DELOSE O'NEAL ENGINEERING – MECH./PLUMBING
P.O. Box 530267
Debary, Florida 32753
(407) 766-2813

JOHN M. PATTERSON, P.E. – ELECTRICAL
1291 John Anderson Drive
Ormond Beach, Florida 32176
(386) 441-2382

A/E: 2315

TABLE OF CONTENTS

DIVISION 01 – GENERAL REQUIREMENTS

01 0300 ALTERNATES
01 2000 APPLICATIONS FOR PAYMENT
01 3100 PROJECT COORDINATION
01 3200 PROJECT MEETINGS
01 4000 QUALITY CONTROL SERVICES
01 5000 TEMPORARY FACILITIES
01 5100 FIELD ENGINEERING
01 6000 PRODUCT REQUIREMENTS
01 6100 SUBMITTALS
01 7000 PROJECT CLOSEOUT

DIVISION 08 – OPENINGS

08 1113 HOLLOW METAL DOORS AND FRAMES
08 3323 OVERHEAD COILING DOORS

DIVISION 09 – FINISHES

09 2116 GYPSUM BOARD ASSEMBLIES

DIVISION 10 – SPECIALTIES

10 4400 LIFE SAFETY EQUIPMENT AND ACCESSORIES

DIVISION 13 – SPECIAL CONSTRUCTION

13 3419 METAL BUILDING SYSTEMS

DIVISION 31 – EARTHWORK

31 0000 EARTHWORK (GEOTECHNICAL REPORT)
31 3116 TERMITE CONTROL

SECTION 010300
ALTERNATES

PART 1 - GENERAL

1.01 RELATED DOCUMENTS

A. Drawings and general provisions of Contract, including General and Supplementary Conditions and other Division-1 Specification Sections, apply to this Section.

1.02 SUMMARY

A. This Section specifies administrative and procedural requirements for Alternates.

B. Definition: An Alternate is an amount proposed by Bidders and stated on the Bid Form for certain construction activities defined in the Bidding Requirements that may be added to or deducted from Base Bid amount if the Owner decides to accept a corresponding change in either the amount of construction to be completed, or in the products, materials, equipment, systems or installation methods described in Contract Documents.

C. Coordination: Coordinate related Work and modify or adjust adjacent Work as necessary to ensure that Work affected by each accepted Alternate is complete and fully integrated into the project.

D. Notification: Immediately following the award of the Contract, prepare and distribute to each party involved, notification of the status of each Alternate. Indicate whether Alternates have been accepted, rejected or deferred for consideration at a later date. Include a complete description of negotiated modifications to Alternates.

E. Schedule: A "Schedule of Alternates" is included at the end of this Section. Specification Sections referenced in or to be inferred from the Schedule contain requirements for materials and methods necessary to achieve the Work described under each Alternate.

1. Include as part of each Alternate, miscellaneous devices, accessory objects and similar items incidental to or required for a complete installation whether or not mentioned as part of the Alternate.

PART 2 - PRODUCTS (NOT APPLICABLE).

PART 3 - EXECUTION

3.01 SCHEDULE OF ALTERNATES (REFER TO SHEET A2.0 FOR MORE INFORMATION)

A. ADDITIVE ALTERNATE No.1: Install 3" of recycled asphalt pavement on top of the 6" stabilized base.

END OF SECTION 010300

SECTION 012000
APPLICATIONS FOR PAYMENT

PART 1 - GENERAL

1.01 RELATED DOCUMENTS

A. Drawings and general provisions of Contract, including General and Supplementary Conditions and other Division-1 Specification Sections, apply to this Section.

1.02 SUMMARY

A. This Section specifies administrative and procedural requirements governing the Contractor's Applications for Payment.
   1. Coordinate the Schedule of Values and Applications for Payment with the Contractor's Construction Schedule, List of Subcontracts, and Submittal Schedule.

B. The Contractor's Construction Schedule and Submittal Schedule are included in Section "Submittals".

1.03 SCHEDULE OF VALUES

A. Coordinate preparation of the Schedule of Values with preparation of the Contractor's Construction Schedule. Correlate line items with other administrative schedules and the forms required for the work, including the following:
   1. Contractor's construction schedule.
   2. Application for Payment form.
   3. List of subcontractors.
   4. Schedule of alternates.
   5. List of products.
   6. List of principal suppliers and fabricators.
   7. Schedule of submittals.

B. Submit the Schedule of Values to the Architect at the earliest feasible date, but in no case later than 10 days before the date scheduled for submittal of the initial Application for Payment.

C. Format and Content: Use the Project Manual Table of Contents as a guide to establish the format for the Schedule of Values.

D. Identification: Include the following Project identification on the Schedule of Values:
   1. Project name and location.
   2. Name of the Architect.
   3. Project number.
   4. Contractor's name and address.
   5. Date of submittal.

E. Arrange the Schedule of Values in a tabular form with separate columns to indicate the following for each item listed:
   1. Generic name.
      a. Related Specification Section.
   2. Change Orders (numbers) that have affected value.
   3. Dollar value.

F. Provide a breakdown of the Contract Sum in sufficient detail to facilitate continued evaluation of Applications for Payment and progress reports.

G. Round amounts off to the nearest whole dollar; the total shall equal the Contract Sum.

H. For each part of the Work where an Application for Payment may include materials or equipment, purchased or fabricated and stored, but not yet installed, provide separate line items on the Schedule of Values for initial cost of the materials, for each subsequent stage of completion, and for total installed value of that part of the Work.

I. Margins of Cost: Show line items for indirect costs, and margins on actual costs, only to the extent that such items will be listed individually in Applications for Payment. Each item in the Schedule of Values and Applications for Payment shall be complete including its total cost and

proportionate share of general overhead and profit margin.

1. At the Contractor's option, temporary facilities and other major cost items that are not direct cost of actual work-in-place may be shown as separate line items in the Schedule of Values or distributed as general overhead expense.

J. Schedule Updating: Update and resubmit the Schedule of Values when Change Orders or Construction Change Directives result in a change in the Contract Sum.

1.04 APPLICATIONS FOR PAYMENT:

A. Each Application for Payment shall be consistent with previous applications and payments as certified by the Architect and paid for by the Owner.

1. The initial Application for Payment, the Application for Payment at time of Substantial Completion, and the final Application for Payment involve additional requirements.

B. Payment Application Times: Each progress payment date is as indicated in the Agreement. The period of construction Work covered by each Application or Payment is the period indicated in the Agreement.

C. Payment Application Forms: Use AIA Document G 702 and Continuation Sheets G 703 as the form for Application for Payment.

D. Application Preparation: Complete every entry on the form, including notarization and execution by person authorized to sign legal documents on behalf of the Owner. Incomplete applications will be returned without action.

1. Entries shall match data on the Schedule of Values and Contractor's Construction Schedule. Use updated schedules if revisions have been made.
2. Include amounts of Change Orders and Construction Change Directives issued prior to the last day of the construction period covered by the application.

E. Transmittal: Submit 8 executed copies of each Application for Payment to the Architect by means ensuring receipt within 24 hours; three copies shall be complete, including waivers of lien and similar attachments, when required.

1. Transmit each copy with a transmittal form listing attachments, and recording appropriate information related to the application in a manner acceptable to the Architect.

F. Payment Approval: At each Monthly Progress Meeting a 'Preliminary' Partial Payment Request will be submitted to Architect and Engineers for reviewal, at which time it will be reviewed, modified if required, and approved by the A/E based on 'on-site' inspection and proper documentation for materials and items properly stored. Payment will be withheld if 'as-built' drawings are not current and acceptable to A/E. Payment request will then be finalized and submitted to Architect for further action.

G. Initial Application for Payment: Administrative actions and submittals that must precede or coincide with submittal of the first Application for Payment include the following:

1. List of subcontractors.
2. Schedule of Values.
3. Contractor's Construction Schedule (preliminary if not final).
4. Submittal Schedule (preliminary if not final).
5. List of Contractor's staff assignments.
6. List of Contractor's principal consultants.
7. Copies of building permits
8. Copies of authorizations and licenses from governing authorities for performance of the Work.
9. Initial progress report.
10. Report of pre-construction meeting.

H. Application for Payment at Substantial Completion: Following issuance of the Certificate of Substantial Completion, submit an Application for Payment; this application shall reflect any Certificates of Partial Substantial Completion issued previously for Owner occupancy of designated portions of the Work.

I. Administrative actions and submittals that shall proceed or coincide with this application include:
   1. Occupancy permits and similar approvals.
   2. Warranties (guarantees) and maintenance agreements.
   3. Test/adjust/balance records.
   4. Maintenance instructions.
   5. Meter readings.
   6. Start-up performance reports.
   7. Change-over information related to Owner's occupancy, use, operation and maintenance.
   8. Final cleaning.
   9. Advice on shifting insurance coverages.
   10. List of incomplete Work, recognized as exceptions to Architect's Certificate of Substantial Completion.

J. Final Payment Application: Administrative actions and submittals which must precede or coincide with submittal of the final payment Application for Payment include the following:
   1. Completion of Project closeout requirements.
   2. Completion of items specified for completion after Substantial Completion.
   3. Assurance that unsettled claims will be settled.
   4. Transmittal of required Project construction records to Owner.
   5. Certified property survey.
   6. Proof that taxes, fees and similar obligations have been paid.
   7. Removal of temporary facilities and services.
   8. Removal of surplus materials, rubbish and similar elements.
   9. Change of door locks to Owner's access.

PART 2 - PRODUCTS (NOT APPLICABLE)

PART 3 - EXECUTION (NOT APPLICABLE)

END OF SECTION 01027

SECTION 013100
PROJECT COORDINATION

PART 1 - GENERAL

1.01 RELATED DOCUMENTS

A. Drawings and general provisions of Contract, including General and Supplementary Conditions and other Division-1 Specification Sections, apply to this Section.

1.02 SUMMARY

A. This Section specifies administrative and supervisory requirements necessary for Project coordination including, but not necessarily limited to:
   1. Coordination.
   2. Administrative and supervisory personnel.
   3. General installation provisions.
   4. Cleaning and protection.

B. Field engineering is included in Section "Field Engineering".

C. Progress meetings, coordination meetings and pre-installation conferences are included in Section "Project Meetings".

D. Requirements for the Contractor's Construction Schedule are included in Section "Submittals".

1.03 COORDINATION

A. Coordination: Coordinate construction activities included under various Sections of these Specifications to assure efficient and orderly installation of each part of the Work. Coordinate construction operations included under different Sections of the Specifications that are dependent upon each other for proper installation, connection, and operation.
   1. Where installation of one part of the Work is dependent on installation of other components, either before or after its own installation, schedule construction activities in the sequence required to obtain the best results.
   2. Where availability of space is limited, coordinate installation of different components to assure maximum accessibility for required maintenance, service and repair.
   3. Make adequate provisions to accommodate items scheduled for later installation.

B. Where necessary, prepare memoranda for distribution to each party involved outlining special procedures required for coordination. Include such items as required notices, reports, and attendance at meetings.
   1. Prepare similar memoranda for the Owner and separate Contractors where coordination of their Work is required.

C. Administrative Procedures: Coordinate scheduling and timing of required administrative procedures with other construction activities to avoid conflicts and ensure orderly progress of the Work. Such administrative activities include, but are not limited to, the following:
   1. Preparation of schedules.
   2. Installation and removal of temporary facilities.
   3. Delivery and processing of submittals.
   4. Progress meetings.
   5. Project Close-out activities.

1.04 SUBMITTALS

A. Coordination Drawings: Prepare and submit coordination drawings where close and careful coordination is required for installation of products and materials fabricated off-site by separate entities, and where limited space availability necessitates maximum utilization of space for efficient installation of different components.
   1. Show the interrelationship of components shown on separate Shop Drawings.
   2. Indicate required installation sequences.
   3. Comply with requirements contained in Section "Submittals".

4. Refer to Division-15 Section "Basic Mechanical Requirements" and Division-16 Section "Basic Electrical Requirements" for specific coordination drawing requirements for mechanical and electrical installations.

B. Staff Names: Within 15 days of Notice to Proceed, submit a list of the Contractor's principal staff assignments, including the Superintendent and other personnel in attendance at the site; identify individuals, their duties and responsibilities; list their addresses and telephone numbers.
   1. Post copies of the list in the Project meeting room, the temporary field office, and each temporary telephone.

PART 2 - PRODUCTS (NOT APPLICABLE).

PART 3 - EXECUTION

3.01 GENERAL INSTALLATION PROVISIONS

A. Inspection of Conditions: Require the Installer of each major component to inspect both the substrate and conditions under which Work is to be performed. Do not proceed until unsatisfactory conditions have been corrected in an acceptable manner.

B. Manufacturer's Instructions: Comply with manufacturer's installation instructions and recommendations, to the extent that those instructions and recommendations are more explicit or stringent than requirements contained in Contract Documents.

C. Inspect materials or equipment immediately upon delivery and again prior to installation. Reject damaged and defective items.

D. Provide attachment and connection devices and methods necessary for securing Work. Secure Work true to line and level. Allow for expansion and building movement.

E. Visual Effects: Provide uniform joint widths in exposed Work. Arrange joints in exposed Work to obtain the best visual effect. Refer questionable choices to the Architect for final decision.

F. Recheck measurements and dimensions, before starting each installation.

G. Install each component during weather conditions and Project status that will ensure the best possible results. Isolate each part of the completed construction from incompatible material as necessary to prevent deterioration.

H. Coordinate temporary enclosures with required inspections and tests, to minimize the necessity of uncovering completed construction for that purpose.

I. Mounting Heights: Where mounting heights are not indicated, install individual components at standard mounting heights recognized within the industry for the particular application indicated. Refer questionable mounting height decisions to the Architect for final decision.

3.02 CLEANING AND PROTECTION

A. During handling and installation, clean and protect construction in progress and adjoining materials in place. Apply protective covering where required to ensure protection from damage or deterioration at Substantial Completion.

B. Clean and maintain completed construction as frequently as necessary through the remainder of the construction period. Adjust and lubricate operable components to ensure operability without damaging effects.

C. Limiting Exposures: Supervise construction activities to ensure that no part of the construction, completed or in progress, is subject to harmful, dangerous, damaging, or otherwise deleterious exposure during the construction period. Where applicable, such exposures include, but are not limited to, the following:
   1. Excessive static or dynamic loading.
   2. Excessive internal or external pressures.
   3. Excessively high or low temperatures.
   4. Thermal shock.
   5. Excessively high or low humidity.
   6. Air contamination or pollution.

7. Water or ice.
8. Solvents.
9. Chemicals.
10. Light.
11. Radiation.
12. Puncture.
13. Abrasion.
14. Heavy traffic.
15. Soiling, staining and corrosion.
16. Bacteria.
17. Rodent and insect infestation.
18. Combustion.
19. Electrical current.
20. High speed operation,
21. Improper lubrication,
22. Unusual wear or other misuse.
23. Contact between incompatible materials.
24. Destructive testing.
25. Misalignment.
26. Excessive weathering.
27. Unprotected storage.
28. Improper shipping or handling.
29. Theft.
30. Vandalism.

END OF SECTION 01040

SECTION 013200
PROJECT MEETINGS

PART 1 - GENERAL

1.01 RELATED DOCUMENTS

A. Drawings and general provisions of the Contract, including General and Supplementary Conditions and other Division-1 Specification Sections, apply to this Section.

1.02 SUMMARY

A. This Section specifies administrative and procedural requirements for project meetings including but not limited to:
   1. Pre-Construction Conference.
   2. Pre-Installation Conferences.
   3. Progress Meetings.

B. Construction schedules are specified in another Division-1 Section.

1.03 PRE-CONSTRUCTION CONFERENCE

A. Schedule a pre-construction conference and organizational meeting at the Project site or other convenient location no later than 15 days after execution of the Agreement and prior to commencement of construction activities. Conduct the meeting to review responsibilities and personnel assignments.

B. Attendees: The Owner, Architect and their consultants, the Contractor and its superintendent, major subcontractors, manufacturers, suppliers and other concerned parties shall each be represented at the conference by persons familiar with and authorized to conclude matters relating to the Work.

C. Agenda: Discuss items of significance that could affect progress including such topics as:
   1. Tentative construction schedule
   2. Critical Work sequencing
   3. Designation of responsible personnel
   4. Procedures for processing field decisions and Change Orders
   5. Procedures for processing Applications for Payment
   6. Distribution of Contract Documents
   7. Submittal of Shop Drawings, Product Data and Samples
   8. Preparation and maintenance of record drawings ('as-builts')
   9. Use of the premises
   10. Office, Work and storage areas
   11. Equipment deliveries and priorities
   12. Safety Procedures
   13. First Aid
   14. Security
   15. Housekeeping
   16. Working hours

1.04 PRE-INSTALLATION CONFERENCES

A. Conduct a pre-installation conference at the site before each major construction activity that requires coordination with other construction. The Installer and representatives of manufacturers and fabricators involved in or affected by the installation, and its coordination or integration with other materials and installations that have preceded or will follow, shall attend the meeting. Advise the Architect of scheduled meeting dates.

B. Review the progress of other construction activities and preparations for particular activity under consideration at each pre-installation conference, including requirements for:
   1. Contract Documents
   2. Options
   3. Related Change Orders and applicable Field Orders

4. Purchases
5. Deliveries
6. Shop Drawings, Product Data and quality control Samples
7. Possible conflicts
8. Compatibility problems
9. Time schedules
10. Weather limitations
11. Manufacturer's recommendations
12. Compatibility of materials
13. Acceptability of substrates
14. Temporary facilities
15. Space and access limitations
16. Governing regulations
17. Safety
18. Inspection and testing requirements
19. Required performance results
20. Recording requirements
21. Protection

C. Record significant discussions and agreements and disagreements of each conference, along with the approved schedule. Distribute the record of the meeting to everyone concerned, promptly, including the Owner and Architect.

D. Do not proceed if the conference cannot be successfully concluded. Initiate whatever actions are necessary to resolve impediments to performance of Work and reconvene the conference at the earliest feasible date.

1.05 PROGRESS MEETINGS

A. Progress meetings are held bi-weekly at regularly scheduled times in the owner's conference room.

B. Attendees: In addition to representatives of the Owner and Architect, each subcontractor, supplier or other entity concerned with current progress or involved in planning, coordination or performance of future activities shall be represented at these meetings by persons familiar with the Project and authorized to conclude matters relating to progress.

C. Agenda: Review and correct or approve minutes of the previous progress meeting. Review other items of significance that could affect progress. Include topics for discussion as appropriate to the current status of the Project.

D. Contractor's Construction Schedule: Review progress since the last meeting. Determine where each activity is in relation to the Contractor's Construction Schedule, whether on time or ahead or behind schedule. Determine how construction behind schedule will be expedited; secure commitments from parties involved to do so. Discuss whether schedule revisions are required to ensure that current and subsequent activities will be completed within the Contract Time.

E. Review the present and future needs of each entity present, including such items as:
1. Record drawings.
2. Interface requirements.
3. Time.
4. Sequences.
5. Deliveries.
6. Off-site fabrication problems.
7. Access.
8. Site utilization.
9. Temporary facilities and services.
10. Hours of Work.
11. Hazards and risks.

12. Housekeeping.
13. Quality and Work standards.
14. Change Orders.
15. Documentation of information for payment requests.

F. Reporting: No later than 3 days after each progress meeting date, distribute copies of minutes of the meeting to each party present and to other parties who should have been present. Include a brief summary, in narrative form, of progress since the previous meeting and report.

G. Schedule Updating: Revise the construction schedule after each progress meeting where revisions to the schedule have been made or recognized. Issue the revised schedule concurrently with the report of each meeting.

PART 2 - PRODUCTS (NOT APPLICABLE)

PART 3 - EXECUTION (NOT APPLICABLE)

END OF SECTION 01200

SECTION 014000
QUALITY CONTROL SERVICES

PART 1 - GENERAL

1.01 RELATED DOCUMENTS

A. Drawings and general provisions of Contract, including General and Supplementary Conditions and other Division-1 Specification Sections, apply to this Section.

1.02 SUMMARY

A. This Section specifies administrative and procedural requirements for quality control services.

B. Quality control services include inspections and tests and related actions including reports, performed by independent agencies, governing authorities, and the Contractor. They do not include Contract enforcement activities performed by the Architect.

C. Inspection and testing services are required to verify compliance with requirements specified or indicated. These services do not relieve the Contractor of responsibility for compliance with Contract Document requirements.

D. Requirements of this Section relate to customized fabrication and installation procedures, not production of standard products.
   1. Specific quality control requirements for individual construction activities are specified in the Sections that specify those activities. Those requirements, including inspections and tests, cover production of standard products as well as customized fabrication and installation procedures.
   2. Inspections, testing and related actions specified are not intended to limit the Contractor's quality control procedures that facilitate compliance with Contract Document requirements.
   3. Requirements for the Contractor to provide quality control services required by the Architect, Owner, or authorities having jurisdiction are not limited by provisions of this Section.

1.03 RESPONSIBILITIES

A. Testing: The Owner will engage and pay a testing agency for all quality control testing. The Contractor will be responsible for coordination and scheduling of the required inspections. Costs of retesting, where initial test results prove unsatisfactory and do not indicate compliance with Contract Document requirements, will be paid by the Contractor.

B. Retesting: The Contractor is responsible for retesting where results of required inspections, tests or similar services prove unsatisfactory and do not indicate compliance with Contract Document requirements, regardless of whether the original test was the Contractor's responsibility.
   1. Cost of retesting construction revised or replaced by the Contractor is the Contractor's responsibility, where required tests were performed on original construction.

C. Associated Services: The Contractor shall cooperate with all authorized agencies performing inspections, tests and similar services and provide reasonable auxiliary services as requested. Notify the agency sufficiently in advance of operations to permit assignment of personnel. Auxiliary services required include but are not limited to:
   1. Providing access to the Work and furnishing incidental labor and facilities necessary to facilitate inspections and tests.
   2. Taking adequate quantities of representative samples of materials that require testing or assisting the agency in taking samples.
   3. Providing facilities for storage and curing of test samples, and delivery of samples to testing laboratories.
   4. Providing the agency with a preliminary design mix proposed for use for materials mixes that require control by the testing agency.
   5. Security and protection of samples and test equipment at the Project site.

D. Duties of the Testing Agency: The independent testing agency engaged to perform inspections, sampling and testing of materials and construction specified in individual Specification Sections shall cooperate with the Architect and Contractor in performance of its duties, and shall provide qualified personnel to perform required inspections and tests.
   1. The agency shall notify the Architect and Contractor promptly of irregularities or deficiencies observed in the Work during performance of its services.
   2. The agency is not authorized to release, revoke, alter or enlarge requirements of the Contract Documents, or approve or accept any portion of the Work.
   3. The agency shall not perform any duties of the Contractor.

E. Coordination: The Contractor and each agency engaged to perform inspections, tests and similar services shall coordinate the sequence of activities to accommodate required services with a minimum of delay. In addition the Contractor and each agency shall coordinate activities to avoid the necessity of removing and replacing construction to accommodate inspections and tests.
   1. The Contractor is responsible for scheduling times for all inspections, tests, taking samples and similar activities.

1.04 SUBMITTALS

A. The independent testing agency shall submit a certified written report of each inspection, test or similar service, to the Architect, in duplicate, unless the Contractor is responsible for the service. If the Contractor is responsible for the service, submit a certified written report of each inspection, test or similar service through the Contractor, in duplicate.
   1. Submit additional copies of each written report directly to the governing authority, when the authority so directs.
   2. Report Data: Written reports of each inspection, test or similar service shall include, but not be limited to:
      a. Date of issue.
      b. Project title and number.
      c. Name, address and telephone number of testing agency.
      d. Dates and locations of samples and tests or inspections.
      e. Names of individuals making the inspection or test.
      f. Designation of the Work and test method.
      g. Identification of product and Specification Section.
      h. Complete inspection or test data.
      i. Test results and an interpretations of test results.
      j. Ambient conditions at the time of sample-taking and testing.
      k. Comments or professional opinion as to whether inspected or tested Work complies with Contract Document requirements.
      l. Name and signature of laboratory inspector.
      m. Indicate that the test passed or failed.
      n. If appropriate, indicate that test is a retest.
      o. Names of contractor and architect advised of failing tests.
      p. Recommendations on retesting.

1.05 QUALITY ASSURANCE

A. Qualification for Service Agencies: Engage inspection and testing service agencies, including independent testing laboratories, which are prequalified as complying with "Recommended Requirements for Independent Laboratory Qualification" by the American Council of Independent Laboratories, and which specialize in the types of inspections and tests to be performed.
   1. Each independent inspection and testing agency engaged on the Project shall be authorized by authorities having jurisdiction to operate in the State in which the Project is located.

PART 2 - PRODUCTS (NOT APPLICABLE).

PART 3 - EXECUTION

3.01 REPAIR AND PROTECTION

A. General: Upon completion of inspection, testing, sample-taking and similar services, repair damaged construction and restore substrates and finishes to eliminate deficiencies, including deficiencies in visual qualities of exposed finishes. Comply with Contract Document requirements for "Cutting and Patching."

B. Protect construction exposed by or for quality control service activities, and protect repaired construction.

C. Repair and protection is the Contractor's responsibility, regardless of the assignment of responsibility for inspection, testing or similar services.

END OF SECTION 01400

SECTION 015000
TEMPORARY FACILITIES

PART 1 - GENERAL

1.01 RELATED DOCUMENTS

A. Drawings and general provisions of the Contract, including General and Supplementary Conditions and other Division-1 Specification Sections, apply to this Section.

1.02 SUMMARY

A. This Section specifies requirements for temporary services and facilities, including utilities, construction and support facilities, security and protection.

B. Temporary utilities required include but are not limited to:
   1. Water service and distribution.
   2. Temporary electric power and light.
   3. Telephone service.

C. Temporary construction and support facilities required include but are not limited to:
   1. Temporary heat.
   2. Field offices and storage sheds.
   3. Temporary roads and paving.
   4. Sanitary facilities, including drinking water.
   5. Temporary enclosures.
   6. Temporary signs and bulletin boards.
   7. Waste disposal services.
   8. Construction aids and miscellaneous services and facilities.

D. Security and protection facilities required include but are not limited to:
   1. Temporary fire protection.
   2. Barricades, warning signs, lights.
   3. Environmental protection.

1.03 QUALITY ASSURANCE

A. Regulations: Comply with industry standards and applicable laws and regulations if authorities having jurisdiction, including but not limited to:
   1. Building Code requirements.
   2. Health and safety regulations.
   3. Utility company regulations.
   4. Police, Fire Department and Rescue Squad rules.
   5. Environmental protection regulations.

B. Standards: Comply with NFPA Code 241, "Building Construction and Demolition Operations", ANSI-A10 Series standards for "Safety Requirements for Construction and Demolition", and NECA Electrical Design Library "Temporary Electrical Facilities."
   1. Refer to "Guidelines for Bid Conditions for Temporary Job Utilities and Services", prepared jointly by AGC and ASC, for industry recommendations.
   2. Electrical Service: Comply with NEMA, NECA and UL standards and regulations for temporary electric service. Install service in compliance with National Electric Code (NFPA 70).

C. Inspections: Arrange for authorities having jurisdiction to inspect and test each temporary utility before use. Obtain required certifications and permits.

1.04 PROJECT CONDITIONS

A. Temporary Utilities: Prepare a schedule indicating dates for implementation and termination of each temporary utility. At the earliest feasible time, when acceptable to the Owner, change over from use of temporary service to use of the permanent service.

B. Conditions of Use: Keep temporary services and facilities clean and neat in appearance. Operate in a safe and efficient manner. Take necessary fire prevention measures. Do not

overload facilities, or permit them to interfere with progress. Do not allow hazardous dangerous or unsanitary conditions, or public nuisances to develop or persist on the site.

PART 2 - PRODUCTS

2.01 EQUIPMENT

A. General: Provide new equipment; if acceptable to the Architect, undamaged, previously used equipment in serviceable condition may be used. Provide equipment suitable for use intended.

B. Water Hoses: Provide 3/4" heavy-duty, abrasion-resistant, flexible rubber hoses 100 ft. long, with pressure rating greater than the maximum pressure of the water distribution system; provide adjustable shut-off nozzles at hose discharge.

C. Electrical Outlets: Provide properly configured NEMA polarized outlets to prevent insertion of 110-120 volt plugs into higher voltage outlets. Provide receptacle outlets equipped with groundfault circuit interrupters, reset button and pilot light, for connection of power tools and equipment.

D. Electrical Power Cords: Provide grounded extension cords; use "hard-service" cords where exposed to abrasion and traffic. Provide waterproof connectors to connect separate lengths of electric cords, if single lengths will not reach areas where construction activities are in progress.

E. Lamps and Light Fixtures: Provide general service incandescent lamps of wattage required for adequate illumination. Provide guard cages or tempered glass enclosures, where exposed to breakage. Provide exterior fixtures where exposed to moisture.

F. Heating Units: Provide temporary heating units that have been tested and labeled by UL, FM or another recognized trade association related to the type of fuel being consumed.

G. Temporary Offices: Provide prefabricated or mobile units or similar job-built construction with lockable entrances, operable windows and serviceable finishes. Provide heated and air-conditioned units on foundations adequate for normal loading.

H. Temporary Toilet Units: Provide self-contained single-occupant toilet units of the chemical, aerated recirculation, or combustion type, properly vented and fully enclosed with a glass fiber reinforced polyester shell or similar nonabsorbent material.

I. First Aid Supplies: Comply with governing regulations.

J. Fire Extinguishers: Provide hand-carried, portable UL-rated, class "A" fire extinguishers for temporary offices and similar spaces. In other locations provide hand-carried, portable, UL-rated, class "ABC" dry chemical extinguishers, or a combination of extinguishers of NFPA recommended classes for the exposures.

1. Comply with NFPA 10 and 241 for classification, extinguishing agent and size required by location and class of fire exposure.

PART 3 - EXECUTION

3.01 INSTALLATION

A. Use qualified personnel for installation of temporary facilities. Locate facilities where they will serve the Project adequately and result in minimum interference with performance of the Work. Relocate and modify facilities as required.

B. Provide each facility ready for use when needed to avoid delay. Maintain and modify as required. Do not remove until facilities are no longer needed, or are replaced by authorized use of completed permanent facilities.

3.02 TEMPORARY UTILITY INSTALLATION

A. General: Engage the appropriate local utility company to install temporary service or connect to existing service. Where the company provides only part of the service, provide the remainder with matching, compatible materials and equipment; comply with the company's recommendations.

1. Arrange with the company and existing users for a time when service can be interrupted, where necessary, to make connections for temporary services.

2. Provide adequate capacity at each stage of construction. Prior to temporary utility availability, provide trucked-in services.
3. Obtain easements to bring temporary utilities to the site, where the Owner's easements cannot be used for that purpose.
4. Use Charges: Cost or use charges for temporary facilities are not chargeable to the Owner or Architect, and will not be accepted as a basis of claims for a Change Order.

B. Water Service: Install water service and distribution piping of sizes and pressures adequate for construction until permanent water service is in use.
1. Sterilization: Sterilize temporary water piping prior to use.

C. Temporary Electric Power Service: Provide weatherproof, grounded electric power service and distribution system of sufficient size, capacity, and power characteristics during construction period. Include meters, transformers, overload protected disconnects, automatic ground-fault interrupters and main distribution switch gear.
1. Power Distribution System: Install wiring overhead, and rise vertically where least exposed to damage. Where permitted, wiring circuits not exceeding 125 Volts, AC 20 ampere rating, and lighting circuits may be nonmetallic sheathed cable where overhead and exposed for surveillance.

D. Temporary Lighting: Whenever overhead floor or roof deck has been installed, provide temporary lighting with local switching.
1. Install and operate temporary lighting that will fulfill security and protection requirements, without operating the entire system, and will provide adequate illumination for construction operations and traffic conditions.

E. Temporary Telephones: Provide temporary telephone service for all personnel engaged in construction activities, throughout the construction period. Install telephone on a separate line for each temporary office and first aid station.
1. At each telephone, post a list of important telephone numbers.

F. Sewers and Drainage: If sewers are available, provide temporary connections to remove effluent that can be discharged lawfully. If sewers are not available or cannot be used, provide drainage ditches, dry wells, stabilization ponds and similar facilities. If neither sewers nor drainage facilities can be lawfully used for discharge of effluent, provide containers to remove and dispose of effluent off the site in a lawful manner.
1. Maintain temporary sewers and drainage facilities in a clean, sanitary condition. Following heavy use, restore normal conditions promptly.

G. Provide earthen embankments and similar barriers in and around excavations and subgrade construction, sufficient to prevent flooding by runoff of storm water from heavy rains.

3.03 TEMPORARY CONSTRUCTION AND SUPPORT FACILITIES INSTALLATION

A. Locate field offices, storage sheds, sanitary facilities and other temporary construction and support facilities for easy access.
1. Maintain temporary construction and support facilities until near Substantial Completion. Remove prior to Substantial Completion. Personnel remaining after Substantial Completion will be permitted to use permanent facilities, under conditions acceptable to the Owner.

B. Temporary Heat: Provide temporary heat required by construction activities, for curing or drying of completed installations or protection of installed construction from adverse effects of low temperatures or high humidity. Select safe equipment that will not have a harmful effect on completed installations or elements being installed. Coordinate ventilation requirements to produce the ambient condition required and minimize consumption of energy.
1. Use of gasoline-burning space heaters, open flame, or salamander type heating units is prohibited.

C. Field Offices: Provide insulated, weathertight temporary offices of sufficient size to accommodate contractor's office personnel at the Project site, and similar separate office for architect and owner's representative. Keep the office clean and orderly for use for small progress meetings. Furnish and equip offices as follows:

1. Contractor's offices: Furnish suitably with not less than a desk and chairs, a 4-drawer file cabinet, plan table and plan rack and a 6-shelf bookcase.

D. Storage and Fabrication Sheds: Install storage and fabrication sheds, sized, furnished and equipped to accommodate materials and equipment involved, including temporary utility service. Sheds may be open shelters or fully enclosed spaces within the building or elsewhere on the site.

E. Temporary Paving: Construct and maintain temporary roads and paving to adequately support the indicated loading and to withstand exposure to traffic during the construction period. Locate temporary paving for roads, storage areas and parking where the same permanent facilities will be located.

F. Sanitary facilities include temporary toilets, wash facilities and drinking water fixtures. Comply with regulations and health codes for the type, number, location, operation and maintenance of fixtures and facilities. Install where facilities will best serve the Project's needs.
1. Provide toilet tissue, paper towels, paper cups and similar disposable materials for each facility. Provide covered waste containers for used material.

G. Toilets: Install self-contained toilet units. Shield toilets to ensure privacy. Use of pit-type privies will not be permitted.

H. Drinking Water Facilities: Provide containerized tap-dispenser bottled-water type drinking water units, including paper supply.

I. Temporary Enclosures: Provide temporary enclosure for protection of construction in progress and completed, from exposure, foul weather, other construction operations and similar activities.
1. Where heat is needed and the permanent building enclosure is not complete, provide temporary enclosures where there is no other provision for containment of heat. Coordinate enclosure with ventilating and material drying or curing requirements to avoid dangerous conditions and effects.
2. Install tarpaulins securely, with incombustible wood framing and other materials. Close openings of 25 square feet or less with plywood or similar materials.
3. Close openings through floor or roof decks and horizontal surfaces with load-bearing wood-framed construction.

J. Project Identification Sign: Furnished by Owner--NIC.

K. Temporary Signs: Prepare signs to provide directional information to construction personnel and visitors.

L. Collection and Disposal of Waste: Collect waste from construction areas and elsewhere daily. Comply with requirements of NFPA 241 for removal of combustible waste material and debris. Enforce requirements strictly. Do not hold materials more than 7 days during normal weather or 3 days when the temperature is expected to rise above 80 deg F (27 deg C). Handle hazardous, dangerous, or unsanitary waste materials separately from other waste by containerizing properly. Dispose of material in a lawful manner.

3.04 SECURITY AND PROTECTION FACILITIES INSTALLATION

A. Temporary Fire Protection: Until fire protection needs are supplied by permanent facilities, install and maintain temporary fire protection facilities of the types needed to protect against reasonably predictable and controllable fire losses. Comply with NFPA 10 "Standard for Portable Fire Extinguishers," and NFPA 241 "Standard for Safeguarding Construction, Alterations and Demolition Operations."
1. Locate fire extinguishers where convenient and effective for their intended purpose, but not less than one extinguisher on each floor at or near each usable stairwell.
2. Store combustible materials in containers in fire-safe locations.
3. Maintain unobstructed access to fire extinguishers, fire hydrants, temporary fire protection facilities, stairways and other access routes for fighting fires. Prohibit smoking in hazardous fire exposure areas.
4. Provide supervision of welding operations, combustion type temporary heating units, and similar sources of fire ignition.

B. Barricades, Warning Signs and Lights: Comply with standards and code requirements for erection of structurally adequate barricades. Paint with appropriate colors, graphics and warning signs to inform personnel and the public of the hazard being protected against. Where appropriate and needed provide lighting, including flashing red or amber lights.

C. Security Enclosure and Lockup: Install substantial temporary enclosure of partially completed areas of construction. Provide locking entrances to prevent unauthorized entrance, vandalism, theft and similar violations of security.
   1. Storage: Where materials and equipment must be stored, and are of value or attractive for theft, provide a secure lockup. Enforce discipline in connection with the installation and release of material to minimize the opportunity for theft and vandalism.

D. Security Fencing: As soon as possible after commencement of the Work, install chain link fencing (specified in Section 02830) around the entire perimeter of the site to serve as security fencing during the construction period. Provide temporary gates at entrances to the site to be replaced by permanent gates as specified at completion of the work.

E. Environmental Protection: Provide protection, operate temporary facilities and conduct construction in ways and by methods that comply with environmental regulations, and minimize the possibility that air, waterways and subsoil might be contaminated or polluted, or that other undesirable effects might result.

F. Restrict use of noise making tools and equipment to hours that will minimize complaints from persons or firms near the site.

3.05 OPERATION, TERMINATION AND REMOVAL

A. Supervision: Enforce strict discipline in use of temporary facilities. Limit availability of temporary facilities to essential and intended uses to minimize waste and abuse.

B. Maintenance: Maintain facilities in good operating condition until removal. Protect from damage by freezing temperatures and similar elements.
   1. Maintain operation of temporary enclosures, heating, cooling, humidity control, ventilation and similar facilities on a 24-hour day basis where required to achieve indicated results and to avoid possibility of damage.

C. Protection: Prevent water filled piping from freezing. Maintain markers for underground lines. Protect from damage during excavation operations.

D. Termination and Removal: Unless the Architect requests that it be maintained longer, remove each temporary facility when the need has ended, or when replaced by authorized use of a permanent facility, or no later than Substantial Completion. Complete or, if necessary, restore permanent construction that may have been delayed because of interference with the temporary facility. Repair damaged Work, clean exposed surfaces and replace construction that cannot be satisfactorily repaired.

E. Remove temporary paving that is not intended for or acceptable for integration into permanent paving. Where the area is intended for landscape development, remove soil and aggregate fill that does not comply with requirements for fill or subsoil in the area. Remove materials contaminated with road oil, asphalt and other petrochemical compounds, and other substances which might impair growth of plant materials or lawns.

F. Repair or replace street paving, curbs and sidewalks at the temporary entrances, as required by the governing authority.

G. At Substantial Completion, clean and renovate permanent facilities that have been used during the construction period, including but not limited to:
   1. Replace air filters and clean inside of ductwork and housings.
   2. Replace significantly worn parts and parts that have been subject to unusual operating conditions.
   3. Replace lamps that are burned out or noticeably dimmed by substantial hours of use.

END OF SECTION 01500

SECTION 015100
FIELD ENGINEERING

PART 1 - GENERAL

1.01 RELATED DOCUMENTS

A. Drawings and general provisions of the Contract, including General and Supplementary Conditions and other Division-1 Specification Sections, apply to this Section.

1.02 SUMMARY

A. General: This Section specifies administrative and procedural requirements for field engineering services, including, but not necessarily limited to, the following:
   1. Land survey work.
   2. Underground systems certification.

1.03 SUBMITTALS

A. Certificates: Submit a certificate signed by the Land Surveyor or Professional Engineer certifying that the location and elevation of improvements comply with the Contract Documents.

B. Final Property Survey: Submit three (4) copies and one (1) CAD disk of both the final property survey and the certification of underground systems, signed and sealed by Land Surveyor.

C. Project Record Documents: Submit a record of Work performed and record survey data as required under provisions of Sections "Submittals" and "Project Closeout".

1.04 QUALITY ASSURANCE

A. Surveyor: Engage a Land Surveyor or Professional Engineer experienced and specializing in land survey work, who is registered in the State of Florida, to perform land surveying services specified in this section.

PART 2 - PRODUCTS (NOT APPLICABLE)

PART 3 - EXECUTION

3.01 EXAMINATION

A. Verify layout information shown on the Drawings, in relation to the property survey and existing benchmarks before proceeding to layout the Work. Locate and protect existing benchmarks and control points. Preserve permanent reference points during construction.
   1. Do not change or relocate benchmarks or control points without prior written approval. Promptly report lost or destroyed reference points, or requirements to relocate reference points because of necessary changes in grades or locations.
   2. Promptly replace lost or destroyed project control points. Base replacements on the original survey control points.

B. Establish and maintain a minimum of two permanent benchmarks on the site, referenced to data established by survey control points.
   1. Record benchmark locations, with horizontal and vertical data, on Project Record Documents.

C. Existing utilities and equipment: The existence and location of underground and other utilities and construction indicated as existing are not guaranteed. Before beginning sitework, investigate and verify the existence and location of underground utilities and other construction.
   1. Prior to construction, verify the location and invert elevation at points of connection of sanitary sewer, storm sewer and water service piping.

3.02 PERFORMANCE

A. Working from lines and levels established by the property survey, establish benchmarks and markers to set lines and levels at each story of construction and elsewhere as needed to properly locate each element of the Project. Calculate and measure required dimensions within indicated or recognized tolerances. Do not scale Drawings to determine dimensions.
   1. Advise entities engaged in construction activities, of marked lines and levels provided for their use.

2. As construction proceeds, check every major element for line, level and plumb.

B. Surveyor's Log: Maintain a surveyor's log of control and other survey Work. Make this log available for reference.
   1. Record deviations from required lines and levels, and advise the Architect when deviations that exceed indicated or recognized tolerances are detected. On Project Record Drawings, record deviations that are accepted and not corrected.
   2. On completion of foundation walls, major site improvements, and other Work requiring field engineering services, prepare a certified survey showing dimensions, locations, angles and elevations of construction and sitework.

C. Site Improvements: Locate and lay out site improvements, including pavements, stakes for grading, fill and topsoil placement, utility slopes and invert elevations by instrumentation and similar appropriate means.

D. Building Lines and Levels: Locate and lay out batter boards for structures, building foundations, column grids and locations, floor levels and control lines and levels required for mechanical and electrical Work.

E. Final Property Survey: Before Substantial Completion, prepare a final property survey showing significant features (real property) for the Project. Include on the survey a certification, signed by the Surveyor, to the effect that principal metes, bounds, lines and levels of the Project are accurately positioned as shown on the survey.

F. Certification of Underground Systems: In addition to the Final Property Survey, the surveyor must certify to the as-built locations and elevations of all underground systems as specified in individual sections of Divisions 2 through 16.

END OF SECTION 01050

SECTION 016000
PRODUCT REQUIREMENTS

PART 1 GENERAL

1.01 SECTION INCLUDES

A. Transportation, handling, storage and protection.

B. Product option requirements.

C. Substitution limitations and procedures.

1.02 RELATED SECTIONS

A. Document 00 2113 - Instructions to Bidders: Product options and substitution procedures prior to bid date.

B. Section 01 4000 - Quality Requirements: Product quality monitoring.

1.03 REFERENCES

A. NFPA 70 - National Electrical Code; National Fire Protection Association; 2005.

1.04 SUBMITTALS

A. Product Data Submittals: Submit manufacturer's standard published data. Mark each copy to identify applicable products, models, options, and other data. Supplement manufacturers' standard data to provide information specific to this Project.

B. Shop Drawing Submittals: Prepared specifically for this Project; indicate utility and electrical characteristics, utility connection requirements, and location of utility outlets for service for functional equipment and appliances.

C. Sample Submittals: Illustrate functional and aesthetic characteristics of the product, with integral parts and attachment devices. Coordinate sample submittals for interfacing work.
   1. For selection from standard finishes, submit samples of the full range of the manufacturer's standard colors, textures, and patterns.

PART 2 PRODUCTS

2.01 NEW PRODUCTS

A. Provide new products unless specifically required or permitted by the Contract Documents.

B. Do not use products having any of the following characteristics:
   1. Made, using or containing CFC's or using HCFC's in the manufacturing process.
   2. Made of wood from newly cut old growth timber.

C. Where all other criteria are met, General Contractor shall give preference to products that:
   1. Are extracted, harvested, and/or manufactured closer to the location of the project.
   2. Have longer documented life span under normal use.
   3. Result in less construction waste.
   4. Are made of vegetable materials that are rapidly renewable.

D. Provide interchangeable components of the same manufacture for components being replaced.

E. Wiring Terminations: Provide terminal lugs to match branch circuit conductor quantities, sizes, and materials indicated. Size terminal lugs to NFPA 70, include lugs for terminal box.

F. Cord and Plug: Provide minimum 6 foot cord and plug including grounding connector for connection to electric wiring system. Cord of longer length is specified in individual specification sections.

2.02 PRODUCT OPTIONS

A. Products Specified by Reference Standards or by Description Only: Use any product meeting those standards or description.

B. Products Specified by Naming One or More Manufacturers: Use a product of one of the manufacturers named and meeting specifications, no options or substitutions allowed.

C. Products Specified by Naming One or More Manufacturers with a Provision for Substitutions: Submit a request for substitution for any manufacturer not named.

PART 3 EXECUTION

3.01 SUBSTITUTION PROCEDURES

A. Instructions to Bidders specify time restrictions for submitting requests for substitutions during the bidding period. Comply with requirements specified in this section.

B. Hall & Ogle Architects, Inc. will consider requests for substitutions only within 30 days after date of Agreement.

C. Substitutions may be considered when a product becomes unavailable through no fault of the contractor.

D. Document each request with complete data substantiating compliance of proposed substitution with Contract Documents.

E. A request for substitution constitutes a representation that the submitter:
   1. Has investigated proposed product and determined that it meets or exceeds the quality level of the specified product.
   2. Will provide the same warranty, at minimum, for the substitution as for the specified product.
   3. Will coordinate installation and make changes to other Work which may be required for the Work to be complete with no additional cost to City of Port Orange.
   4. Waives claims for additional costs or time extension which may subsequently become apparent.
   5. Will reimburse City of Port Orange and Hall & Ogle Architects, Inc. for review or redesign services associated with re-approval by authorities.
   6. Will allow cost savings associated with substitution to reduce Contract Sum.

F. Substitutions will not be considered when they are indicated or implied on shop drawing or product data submittals, without separate written request, or when acceptance will require revision to the Contract Documents.

G. Substitution Submittal Procedure:
   1. Submit four copies of request for substitution for consideration. Limit each request to one proposed substitution.
   2. Submit shop drawings, product data, and certified test results attesting to the proposed product equivalence. Burden of proof is on proposer.
   3. Hall & Ogle Architects, Inc. will notify General Contractor in writing of decision to accept or reject request.

3.02 TRANSPORTATION AND HANDLING

A. Coordinate schedule of product delivery to designated prepared areas in order to minimize site storage time and potential damage to stored materials.

B. Transport and handle products in accordance with manufacturer's instructions.

C. Transport materials in covered trucks to prevent contamination of product and littering of surrounding areas.

D. Promptly inspect shipments to ensure that products comply with requirements, quantities are correct, and products are undamaged.

E. Provide equipment and personnel to handle products by methods to prevent soiling, disfigurement, or damage.

F. Arrange for the return of packing materials, such as wood pallets, where economically feasible.

3.03 STORAGE AND PROTECTION

A. Designate receiving/storage areas for incoming products so that they are delivered according to installation schedule and placed convenient to work area in order to minimize waste due to excessive materials handling and misapplication.

B. Store and protect products in accordance with manufacturers' instructions.

C. Store sensitive products in weather tight, climate controlled, enclosures in an environment favorable to product.

D. For exterior storage of fabricated products, place on sloped supports above ground.

E. Provide bonded off-site storage and protection when site does not permit on-site storage or protection.

F. Cover products subject to deterioration with impervious sheet covering. Provide ventilation to prevent condensation and degradation of products.

G. Store loose granular materials on solid flat surfaces in a well-drained area. Prevent mixing with foreign matter.

H. Provide equipment and personnel to store products by methods to prevent soiling, disfigurement, or damage.

I. Arrange storage of products to permit access for inspection. Periodically inspect to verify products are undamaged and are maintained in acceptable condition.

END OF SECTION

SECTION 016100
SUBMITTALS

PART 1 - GENERAL

1.01 RELATED DOCUMENTS

A. Drawings and general provisions of Contract, including General and Supplementary Conditions and other Division-1 Specification Sections, apply to this Section.

1.02 SUMMARY

A. This Section specifies administrative and procedural requirements for submittals required for performance of the Work including;
   1. Contractor's construction schedule
   2. Submittal schedule
   3. Product Data
   4. Daily construction reports
   5. Shop Drawings
   6. Samples

B. Administrative Submittals: Refer to other Division-1 Sections and other Contract Documents for requirements for administrative submittals. Such submittals include, but are not limited to:
   1. Permits
   2. Performance and payment bonds
   3. List of Subcontractors
   4. The Schedule of Values submittal is included in Section "Applications for Payment"
   5. Inspection and test reports are included in Section "Quality Control Services"
   6. Applications for Payment
   7. Insurance certificates

1.03 SUBMITTAL PROCEDURES

A. Coordination: Coordinate preparation and processing of submittals with performance of construction activities. Transmit each submittal sufficiently in advance of performance of related construction activities to avoid delay.
   1. Coordinate each submittal with fabrication, purchasing, testing, delivery, other submittals and related activities that require sequential activity.
   2. Coordinate transmittal of different types of submittals for related elements of the Work so processing will not be delayed by the need to review submittals concurrently for coordination.
      a. The Architect reserves the right to withhold action on a submittal requiring coordination with other submittals until related submittals are received.
   3. Processing: Allow sufficient review time so that installation will not be delayed as a result of the time required to process submittals, including time for resubmittals.
      a. Allow two weeks for initial review. Allow additional time if processing must be delayed to permit coordination with subsequent submittals. The Architect will promptly advise the Contractor when a submittal being processed must be delayed for coordination.
      b. If an intermediate submittal is necessary, process the same as the initial submittal.
      c. Allow two weeks for reprocessing each submittal.
      d. No extension of Contract Time will be authorized because of failure to transmit submittals to the Architect sufficiently in advance of the Work to permit processing.

B. Submittal Preparation: Place a permanent label or title block on each submittal for identification. Indicate the name of the entity that prepared each submittal on the label or title block.
   1. Provide a space approximately 4" x 5" on the label or beside the title block on Shop Drawings to record the Contractor's review and approval markings and the action taken.
   2. Include the following information on the label for processing and recording action taken.
      a. Project name.

b. Date.
c. Name and address of Architect.
d. Name and address of Contractor.
e. Name and address of subcontractor.
f. Name and address of supplier.
g. Name of manufacturer.
h. Number and title of appropriate Specification Section.
i. Drawing number and detail references, as appropriate.

C. Submittal Transmittal: Package each submittal appropriately for transmittal and handling. Transmit each submittal from Contractor to Architect using a transmittal form. Submittals received from sources other than the Contractor will be returned without action.
1. On the transmittal, record relevant information and requests for data. On the form, or separate sheet, record deviations from Contract Document requirements, including minor variations and limitations. Include Contractor's certification that information complies with Contract Document requirements. Submittals without Contractor Certification of compliance will be returned without review.
2. Transmittal Form: Use AIA Document G 810.

1.04 CONTRACTOR'S CONSTRUCTION SCHEDULE

A. Bar-Chart Schedule: Prepare a fully developed, horizontal bar-chart type Contractor's construction schedule. Submit within 7 days of the date established for "Commencement of the Work".
1. Provide a separate time bar for each significant construction activity. Provide a continuous vertical line to identify the first working day of each week. Use the same breakdown of units of the Work as indicated in the "Schedule of Values".
2. Within each time bar indicate estimated completion percentage in 10 percent increments. As Work progresses, place a contrasting mark in each bar to indicate Actual Completion.
3. Prepare the schedule on a sheet, or series of sheets, of stable transparency, or other reproducible media, of sufficient width to show data for the entire construction period.
4. Secure time commitments for performing critical elements of the Work from parties involved. Coordinate each element on the schedule with other construction activities; include minor elements involved in the sequence of the Work. Show each activity in proper sequence. Indicate graphically sequences necessary for completion of related portions of the Work.
5. Coordinate the Contractor's construction schedule with the schedule of values, list of subcontracts, submittal schedule, progress reports, payment requests and other schedules.
6. Indicate completion in advance of the date established for Substantial Completion. Indicate Substantial Completion on the schedule to allow time for the Architect's procedures necessary for certification of Substantial Completion.

B. Distribution: Following response to the initial submittal, print and distribute copies to the Architect, Owner, subcontractors, and other parties required to comply with scheduled dates. Post copies in the Project meeting room and temporary field office.
1. When revisions are made, distribute to the same parties and post in the same locations. Delete parties from distribution when they have completed their assigned portion of the Work and are no longer involved in construction activities.

C. Schedule Updating: Revise the schedule after each meeting or activity, where revisions have been recognized or made. Issue the updated schedule concurrently with report of each meeting.

1.05 SUBMITTAL SCHEDULE

A. After development and acceptance of the Contractor's construction schedule, prepare a complete schedule of submittals. Submit the schedule within 10 days of the date required for establishment of the Contractor's construction schedule.
1. Coordinate submittal schedule with the list of subcontracts, schedule of values and the list of products as well as the Contractor's construction schedule.

2. Prepare the schedule in chronological order; include submittals required during the first 90 days of construction. Provide the following information:
    a. Scheduled date for the first submittal.
    b. Related Section number.
    c. Submittal category.
    d. Name of subcontractor.
    e. Description of the part of the Work covered.
    f. Scheduled date for resubmittal.
    g. Scheduled date the Architect's final release or approval.

B. Distribution: Following response to initial submittal, print and distribute copies to the Architect, Owner, subcontractors, and other parties required to comply with submittal dates indicated. Post copies in the Project meeting room and field office.
    1. When revisions are made, distribute to the same parties and post in the same locations. Delete parties from distribution when they have completed their assigned portion of the Work and are no longer involved in construction activities.

C. Schedule Updating: Revise the schedule after each meeting or activity, where revisions have been recognized or made. Issue the updated schedule concurrently with report of each meeting.

1.06 DAILY CONSTRUCTION REPORTS

A. Prepare a daily construction report, recording the following information concerning events at the site:
    1. List of subcontractors at the site.
    2. Approximate count of personnel at the site.
    3. High and low temperatures, general weather conditions.
    4. Accidents and unusual events.
    5. Meetings and significant decisions.
    6. Stoppages, delays, shortages, losses.
    7. Meter readings and similar recordings.
    8. Emergency procedures.
    9. Orders and requests of governing authorities.
    10. Change Orders received, implemented.
    11. Services connected, disconnected.
    12. Equipment or system tests and start-ups.
    13. Partial Completions, occupancies.
    14. Substantial Completions authorized.

1.07 SHOP DRAWINGS

A. Submit newly prepared information, drawn to accurate scale. Highlight, encircle, or otherwise indicate deviations from the Contract Documents. Do not reproduce Contract Documents or copy standard information as the basis of Shop Drawings. Standard information prepared without specific reference to the Project is not considered Shop Drawings.
    1. Sheet Size: Except for templates, patterns and similar full-size Drawings, submit Shop Drawings on sheets at least 8-1/2" x 11" but no larger than 24" x 36".

B. Shop Drawings include fabrication and installation drawings, setting diagrams, schedules, patterns, templates and similar drawings. Include the following information:
    1. Dimensions.
    2. Identification of products and materials included.
    3. Compliance with specified standards.
    4. Notation of coordination requirements.
    5. Notation of dimensions established by field measurement.

C. Submittal: Submit a minimum of 6 sets of blue- or black-line prints. Three prints will be retained; the remainder will be returned. Submit additional copies as required for contractor's use.

1. Maintain one of the marked-up prints returned, as a "Record Document".
2. Do not use Shop Drawings without an appropriate final stamp indicating action taken in connection with construction.
3. Only Final reviewed shop drawings which have been reviewed by the Architect and the design Structural Engineer shall be used for fabrication and the field installation of products or assemblies of products. Modification of reviewed shop drawings by the manufacturer or fabricator for “Field Use” is prohibited unless proposed modifications have been reviewed by the Architect.

D. Coordination drawings are a special type of Shop Drawing that show the relationship and integration of different construction elements that require careful coordination during fabrication or installation to fit in the space provided or function as intended.
1. Preparation of coordination Drawings is specified in section "Project Coordination" and may include components previously shown in detail on Shop Drawings or Product Data.
2. Submit coordination Drawings for integration of different construction elements. Show sequences and relationships of separate components to avoid conflicts in use of space.

1.08 PRODUCT DATA

A. Collect Product Data into a single submittal for each element of construction or system. Product Data includes printed information such as manufacturer's installation instructions, catalog cuts, standard color charts, roughing-in diagrams and templates, standard wiring diagrams and performance curves. Where Product Data must be specially prepared because standard printed data is not suitable for use, submit as "Shop Drawings."
1. Mark each copy to show applicable choices and options. Where printed Product Data includes information on several products, some of which are not required, mark copies to indicate the applicable information. Include the following information:
a. Manufacturer's printed recommendations.
b. Compliance with recognized trade association standards.
c. Compliance with recognized testing agency standards.
d. Application of testing agency labels and seals.
e. Notation of dimensions verified by field measurement.
f. Notation of coordination requirements.

B. Do not submit Product Data until compliance with requirements of the Contract Documents has been confirmed.

C. Submittals: Submit 3 copies of each required submittal; submit 4 copies where required for maintenance manuals. The Architect will retain two, and will return the other marked with action taken and corrections or modifications required.
1. Unless noncompliance with Contract Document provisions is observed, the submittal may serve as the final submittal.

D. Distribution: Furnish copies of final submittal to installers, subcontractors, suppliers, manufacturers, fabricators, and others required for performance of construction activities. Show distribution on transmittal forms.
1. Do not proceed with installation until an applicable copy of Product Data applicable is in the installer's possession.
2. Do not permit use of unmarked copies of Product Data in connection with construction.

1.09 SAMPLES

A. Submit full-size, fully fabricated Samples cured and finished as specified and physically identical with the material or product proposed. Samples include partial sections of manufactured or fabricated components, cuts or containers of materials, color range sets, and swatches showing color, texture and pattern.
1. Mount, display, or package Samples in the manner specified to facilitate review of qualities indicated. Prepare Samples to match the Architect's Sample. Include the following:
a. Generic description of the Sample.
b. Sample source.

c. Product name or name of manufacturer.
d. Compliance with recognized standards.
e. Availability and delivery time.

B. Submit Samples for review of kind, color, pattern, and texture, for a final check of these characteristics with other elements, and for a comparison of these characteristics between the final submittal and the actual component as delivered and installed.
1. Where variation in color, pattern, texture or other characteristics are inherent in the material or product represented, submit multiple units (not less than 3), that show approximate limits of the variations.
2. Refer to other Specification Sections for requirements for Samples that illustrate workmanship, fabrication techniques, details of assembly, connections, operation and similar construction characteristics.

C. Preliminary submittals: Where Samples are for selection of color, pattern, texture or similar characteristics from a range of standard choices, submit a full set of choices for the material or product.
1. Preliminary submittals will be reviewed and returned with the Architect's mark indicating selection and other action.

D. Submittals: Except for Samples illustrating assembly details, workmanship, fabrication techniques, connections, operation and similar characteristics, submit 2 sets; one will be returned marked with the action taken.

E. Maintain sets of Samples, as returned, at the Project site, for quality comparisons throughout the course of construction.
1. Unless noncompliance with Contract Document provisions is observed, the submittal may serve as the final submittal.
2. Sample sets may be used to obtain final acceptance of the construction associated with each set.

F. Distribution of Samples: Prepare and distribute additional sets to subcontractors, manufacturers, fabricators, suppliers, installers, and others as required for performance of the Work. Show distribution on transmittal forms.

G. Field Samples specified in individual Sections are special types of Samples. Field Samples are full-size examples erected on site to illustrate finishes, coatings, or finish materials and to establish the standard by which the Work will be judged.
1. Comply with submittal requirements to the fullest extent possible. Process transmittal forms to provide a record of activity.

1.10 ARCHITECT'S ACTION

A. Except for submittals for record, information or similar purposes, where action and return is required or requested, the Architect will review each submittal, mark to indicate action taken, and return promptly.
1. Compliance with specified characteristics is the Contractor's responsibility.

B. Action Stamp: The Architect will stamp each submittal with a uniform, self-explanatory action stamp. The stamp will be appropriately marked, as follows, to indicate the action taken:
1. Final Unrestricted Release: Where submittals are marked "Reviewed," that part of the Work covered by the submittal may proceed provided it complies with requirements of the Contract Documents; final acceptance will depend upon that compliance.
2. Final-But-Restricted Release: When submittals are marked "Furnish as Corrected," that part of the Work covered by the submittal may proceed provided it complies with notations or corrections on the submittal and requirements of the Contract Documents; final acceptance will depend on that compliance.
3. Returned for Resubmittal: When submittal is marked "Rejected or Revise and Resubmit," do not proceed with that part of the Work covered by the submittal, including purchasing, fabrication, delivery, or other activity. Revise or prepare a new submittal in accordance with the notations; resubmit without delay. Repeat if necessary to obtain a different action mark.

a. Do not permit submittals marked "Rejected or Revise and Resubmit" to be used at the Project site, or elsewhere where Work is in progress.

4. Other Action: Where a submittal is primarily for information or record purposes, special processing or other activity, the submittal will be returned, marked "Review Not Required". Where a submittal is marked also "Submit Specified Item", further submittal information is required.

PART 2 - PRODUCTS (NOT APPLICABLE).

PART 3 - EXECUTION (NOT APPLICABLE).

END OF SECTION 01300

SECTION 017000
PROJECT CLOSEOUT

PART 1 - GENERAL

1.01 RELATED DOCUMENTS

A. Drawings and general provisions of Contract, including General and Supplementary Conditions and other Division-1 Specification Sections, apply to this Section.

1.02 SUMMARY

A. This Section specifies administrative and procedural requirements for project closeout, including but not limited to:
   1. Inspection procedures.
   2. Project record document submittal.
   3. Operating and maintenance manual submittal.
   4. Submittal of warranties.
   5. Final cleaning.
   6. Closeout requirements for specific construction activities are included in the appropriate Sections in Divisions-2 through -16.

1.03 SUBSTANTIAL COMPLETION

A. Preliminary Procedures: Before requesting inspection for certification of Substantial Completion, complete the following. List exceptions in the request.
   1. In the Application for Payment that coincides with, or first follows, the date Substantial Completion is claimed, show 100 percent completion for the portion of the Work claimed as substantially complete. Include supporting documentation for completion as indicated in these Contract Documents and a statement showing an accounting of changes to the Contract Sum.
      a. If 100 percent completion cannot be shown, include a list of incomplete items, the value of incomplete construction, and reasons the Work is not complete.
   2. Advise Owner of pending insurance change-over requirements.
   3. Submit specific warranties, workmanship bonds, maintenance agreements, final certifications and similar documents.
   4. Obtain and submit releases enabling the Owner unrestricted use of the Work and access to services and utilities; include occupancy permits, operating certificates and similar releases.
   5. Submit record drawings, maintenance manuals, final project photographs, damage or settlement survey, property survey, and similar final record information.
   6. Deliver tools, spare parts, extra stock, and similar items.
   7. Make final change-over of permanent locks and transmit keys to the Owner. Advise the Owner's personnel of change-over in security provisions.
   8. Complete start-up testing of systems, and instruction of the Owner's operating and maintenance personnel. Discontinue or change over and remove temporary facilities from the site, along with construction tools, mock-ups, and similar elements.
   9. Complete final clean up requirements, including touch-up painting. Touch-up and otherwise repair and restore marred exposed finishes.

B. Inspection Procedures: On receipt of a request for inspection, the Architect will either proceed with inspection or advise the Contractor of unfilled requirements. The Architect will prepare the Certificate of Substantial Completion following inspection, or advise the Contractor of construction that must be completed or corrected before the certificate will be issued.
   1. The Architect will repeat inspection when requested and assured that the Work has been substantially completed.
   2. Results of the completed inspection will form the basis of requirements for final acceptance.

C. Occupancy Inspection:

1. The Architect, contractor and owner's representative, will conduct an inspection of the work to be occupied. Upon approval, the owner may occupy that portion of the work. The contractor shall cooperate, and participate in this inspection.

1.04 FINAL ACCEPTANCE

A. Preliminary Procedures: Before requesting final inspection for certification of final acceptance and final payment, complete the following. List exceptions in the request.
   1. Submit the final payment request with releases and supporting documentation not previously submitted and accepted. Include certificates of insurance for products and completed operations where required.
   2. Submit an updated final statement, accounting for final additional changes to the Contract Sum.
   3. Submit a certified copy of the Architect's final inspection list of items to be completed or corrected, stating that each item has been completed or otherwise resolved for acceptance, and the list has been endorsed and dated by the Architect.
   4. Submit consent of surety to final payment.
   5. Submit a final liquidated damages settlement statement.
   6. Submit evidence of final, continuing insurance coverage complying with insurance requirements.

B. Reinspection Procedure: The Architect will reinspect the Work upon receipt of notice that the Work, including inspection list items from earlier inspections, has been completed, except items whose completion has been delayed because of circumstances acceptable to the Architect.
   1. Upon completion of reinspection, the Architect will prepare a certificate of final acceptance, or advise the Contractor of Work that is incomplete or of obligations that have not been fulfilled but are required for final acceptance.
   2. If necessary, reinspection will be repeated.

1.05 RECORD DOCUMENT SUBMITTALS

A. General: Do not use record documents for construction purposes; protect from deterioration and loss in a secure, fire-resistive location; provide access to record documents for the Architect's reference during normal working hours.

B. Record Drawings (As-built Plans): Maintain a clean, undamaged set of blue or black line white-prints of Contract Drawings and Shop Drawings. Mark the set to show the actual installation where the installation varies substantially from the Work as originally shown. Mark whichever drawing is most capable of showing conditions fully and accurately; where Shop Drawings are used, record a cross-reference at the corresponding location on the Contract Drawings. Give particular attention to concealed elements that would be difficult to measure and record at a later date.
   1. Mark record sets with red erasable pencil; use other colors to distinguish between variations in separate categories of the Work.
   2. Mark new information that is important to the Owner, but was not shown on Contract Drawings or Shop Drawings.
   3. Note related Addenda, Field Order and Change Order numbers where applicable.
   4. The Contractor shall employ a Drafting Service at or near completion of the project for conversion of the marked-up As-built plans to CAD drawings compatible with Architect’s/Owner's CAD capabilities. Coordinate with Architect to verify compatibility and obtain electronic copy of drawing documents.
   5. The document changes shall be kept up-to-date and will be reviewed by the Architect/Engineer at the monthly progress meetings. Monthly progress payments will not be approved until changes to "as-built" drawings are current.

C. The Contractor shall record all changes made in the field as a “hard copy” set, and shall forward both the completed electronic and “hard-copy” versions of "as-built" Construction Record documents to the Architect's office for the Owner's records. Also reference and include the final property survey and certification of underground systems as required by Section 01050.

D. Record Specifications: Maintain one complete copy of the Project Manual, including addenda, and one copy of other written construction documents such as Change Orders and modifications issued in printed form during construction. Mark these documents to show substantial variations in actual Work performed in comparison with the text of the Specifications and modifications. Give particular attention to substitutions, selection of options and similar information on elements that are concealed or cannot otherwise be readily discerned later by direct observation. Note related record drawing information and Product Data.
   1. Upon completion of the Work, submit record Specifications to the Architect for the Owner's records.

E. Maintenance Manuals: Organize operating and maintenance data into suitable sets of manageable size. Bind properly indexed data in individual heavy-duty 2-inch, 3-ring vinyl-covered binders, with pocket folders for folded sheet information. Mark appropriate identification on front and spine of each binder. Include the following types of information:
   1. Emergency instructions.
   2. Spare parts list.
   3. Copies of warranties.
   4. Wiring diagrams.
   5. Recommended "turn around" cycles.
   6. Inspection procedures.
   7. Shop Drawings and Product Data.
   8. Fixture lamping schedule.
   9. Submit three (3) sets of all maintenance manuals.

PART 2 - PRODUCTS (NOT APPLICABLE)

PART 3 - EXECUTION

3.01 CLOSEOUT PROCEDURES

A. Operating and Maintenance Instructions: Arrange for each installer of equipment that requires regular maintenance to meet with the Owner's personnel to provide instruction in proper operation and maintenance. If installers are not experienced in procedures, provide instruction by manufacturer's representatives. Include a detailed review of the following items:
   1. Maintenance manuals.
   2. Record documents.
   3. Spare parts and materials.
   4. Tools.
   5. Lubricants.
   6. Fuels.
   7. Identification systems.
   8. Control sequences.
   9. Hazards.
   10. Cleaning.
   11. Warranties and bonds.
   12. Maintenance agreements and similar continuing commitments.

B. As part of instruction for operating equipment, demonstrate the following procedures:
   1. Start-up.
   2. Shutdown.
   3. Emergency operations.
   4. Noise and vibration adjustments.
   5. Safety procedures.
   6. Economy and efficiency adjustments.
   7. Effective energy utilization.

C. Submit three (3) sets of all closeout documents (Maintenance Manuals, Warranties, and other similar documents).

3.02 FINAL CLEANING

A. General: General cleaning during construction is required by the General Conditions and included in Section "Temporary Facilities".

B. Cleaning: Employ experienced workers or professional cleaners for final cleaning. Clean each surface or unit to the condition expected in a normal, commercial building cleaning and maintenance program. Comply with manufacturer's instructions.

1. Complete the following cleaning operations before requesting inspection for Certification of Substantial Completion.
    a. Remove labels that are not permanent labels.
    b. Clean transparent materials, including mirrors and glass in doors and windows. Remove glazing compound and other substances that are noticeable vision-obscuring materials. Replace chipped or broken glass and other damaged transparent materials.
    c. Clean exposed exterior and interior hard-surfaced finishes to a dust-free condition, free of stains, films and similar foreign substances. Restore reflective surfaces to their original reflective condition. Leave concrete floors broom clean. Vacuum carpeted surfaces.
    d. Wipe surfaces of mechanical and electrical equipment. Remove excess lubrication and other substances. Clean plumbing fixtures to a sanitary condition. Clean light fixtures and lamps.
    e. Clean the site, including landscape development areas, of rubbish, litter and other foreign substances. Sweep paved areas broom clean; remove stains, spills and other foreign deposits. Rake grounds that are neither paved nor planted, to a smooth even-textured surface.
2. Removal of Protection: Remove temporary protection and facilities installed for protection of the Work during construction.
3. Compliance: Comply with regulations of authorities having jurisdiction and safety standards for cleaning. Do not burn waste materials. Do not bury debris or excess materials on the Owner's property. Do not discharge volatile, harmful or dangerous materials into drainage systems. Remove waste materials from the site and dispose of in a lawful manner.
    a. Where extra materials of value remaining after completion of associated Work have become the Owner's property, arrange for disposition of these materials as directed.

END OF SECTION 01700

SECTION 081113
HOLLOW METAL DOORS AND FRAMES

PART 1 GENERAL

1.01 SECTION INCLUDES

A. Non-fire-rated hollow metal doors and frames.

1.02 REFERENCE STANDARDS

A. ANSI/SDI A250.8 - Specifications for Standard Steel Doors and Frames (SDI-100); 2014.

B. ANSI/SDI A250.10 - Test Procedure and Acceptance Criteria for Prime Painted Steel Surfaces for Steel Doors and Frames; 2011.

C. ASTM A653/A653M - Standard Specification for Steel Sheet, Zinc-Coated (Galvanized) or Zinc-Iron Alloy-Coated (Galvannealed) by the Hot-Dip Process; 2015.

D. ASTM A1008/A1008M - Standard Specification for Steel, Sheet, Cold-Rolled, Carbon, Structural, High-Strength Low-Alloy, High-Strength Low-Alloy with Improved Formability, Solution Hardened, and Bake Hardenable; 2015.

E. ASTM A1011/A1011M - Standard Specification for Steel, Sheet and Strip, Hot-Rolled, Carbon, Structural, High-Strength Low-Alloy, High-Strength Low-Alloy with Improved Formability, and Ultra-High Strength; 2014.

F. BHMA A156.115 - American National Standard for Hardware Preparation in Steel Doors and Steel Frames; 2014.

G. NAAMM HMMA 840 - Guide Specifications for Installation and Storage of Hollow Metal Doors and Frames; 2007.

1.03 SUBMITTALS

A. See Section 013000 - Submittals for submittal procedures.

B. Product Data: Materials and details of design and construction, hardware locations, reinforcement type and locations, anchorage and fastening methods, and finishes.

C. Shop Drawings: Details of each opening, showing elevations, glazing, frame profiles, and identifying location of different finishes, if any.

D. Manufacturer's Certificate: Certification that products meet or exceed specified requirements.

1.04 QUALITY ASSURANCE

A. Manufacturer Qualifications: Company specializing in manufacturing the products specified in this section with minimum three years documented experience.

B. Maintain at the project site a copy of all reference standards dealing with installation.

1.05 DELIVERY, STORAGE, AND HANDLING

A. Store in accordance with NAAMM HMMA 840.

B. Protect with resilient packaging; avoid humidity build-up under coverings; prevent corrosion.

PART 2 PRODUCTS

2.01 MANUFACTURERS

A. Steel Frames and Doors:
   1. Assa Abloy Ceco, Curries, or Fleming: www.assaabloydss.com/#sle.
   2. Ceco Door Products: www.cecodoor.com.
   3. Windsor Republic Doors: www.republicdoor.com.
   4. Steelcraft: www.steelcraft.com.
   5. Substitutions: See Section 016000 - Product Requirements.

2.02 FRAMES

A. Requirements for All Doors and Frames:

1. Steel used for fabrication of doors and frames shall comply with one or more of the following requirements; Galvannealed steel conforming to ASTM A653/A653M, cold-rolled steel conforming to ASTM A1008/A1008M, or hot-rolled pickled and oiled (HRPO) steel conforming to ASTM A1011/A1011M, Commercial Steel (CS) Type B for each.
2. Accessibility: Comply with ANSI/ICC A117.1.
3. Door Top Closures: Flush with top of faces and edges.
4. Door Edge Profile: Beveled on both edges.
5. Door Texture: Smooth faces.
6. Glazed Lights: Non-removable stops on non-secure side; sizes and configurations as indicated on drawings.
7. Hardware Preparation: In accordance with DHI A115 Series, with reinforcement welded in place, in addition to other requirements specified in door grade standard. Refer to door hardware schedule for exact hardware to be installed at each door.
8. Galvanizing for Units in wet or exterior locations or unconditioned or partly-conditioned spaces: All components hot-dipped zinc-iron alloy-coated (galvannealed), manufacturer's standard coating thickness.
9. Finish: Factory primed, for field finishing.

B. Combined Requirements: If a particular door and frame unit is indicated to comply with more than one type of requirement, comply with the specified requirements for each type; for instance, an exterior door that is also indicated as being sound-rated must comply with the requirements specified for exterior doors and for sound-rated doors; where two requirements conflict, comply with the most stringent.

2.03 STEEL DOORS

A. Exterior Doors :
1. Grade: ANSI A250.8 Level 3, physical performance Level A, Model 2, seamless.
2. Core: Polystyrene foam.
3. Weatherstripping: Separate, see Section 087100.

B. Interior Doors , Non-Fire-Rated:
1. Grade: ANSI A250.8 Level 2, physical performance Level B, Model 2, seamless.
2. Core: Cardboard honeycomb.
3. Thickness: 1-3/4 inches.

2.04 STEEL FRAMES

A. General:
1. Comply with the requirements of grade specified for corresponding door, except:
   a. ANSI A250.8 Level 2 Doors: 16 gage frames.
   b. ANSI A250.8 Level 3 Doors: 14 gage frames.
   c. Frames for Wood Doors: Comply with frame requirements indicated on frame types drawing and in opening schedule.

B. All Door Frames: Fully welded.
1. Galvanizing: All components hot-dipped zinc-iron alloy-coated (galvannealed) in accordance with ASTM A653/A653M, with manufacturer's standard coating thickness.
2. Weatherstripping: Separate, see Section 087100.

C. Interior Door Frames , Non-Fire-Rated: Fully welded type.
1. Galvanizing: All components hot-dipped zinc-iron alloy-coated (galvannealed) in accordance with ASTM A 653/A 653M, with manufacturer's standard coating thickness

2.05 FINISH MATERIALS

A. Primer: Rust-inhibiting, complying with ANSI A250.10 , door manufacturer's standard.

PART 3 EXECUTION

3.01 EXAMINATION

A. Verify existing conditions before starting work.

B. Verify that opening sizes and tolerances are acceptable.

C. Verify that finished walls are in plane to ensure proper door alignment.

3.02 PREPARATION

3.03 INSTALLATION

A. Install in accordance with the requirements of the specified door grade standard and NAAMM HMMA 840.

B. Coordinate frame anchor placement with wall construction.

C. Coordinate installation of hardware.

D. Touch up damaged factory finishes.

3.04 TOLERANCES

A. Clearances Between Door and Frame: As specified in ANSI A250.8.

B. Maximum Diagonal Distortion: 1/16 in measured with straight edge, corner to corner.

3.05 ADJUSTING

A. Adjust for smooth and balanced door movement.

END OF SECTION

SECTION 083323
OVERHEAD COILING DOORS

PART 1 GENERAL

1.01 SECTION INCLUDES

A. Overhead coiling doors , operating hardware, non-fire-rated and exterior, manual operation.

1.02 RELATED REQUIREMENTS

1.03 REFERENCE STANDARDS

A. ASTM A36/A36M - Standard Specification for Carbon Structural Steel; 2014.

B. ASTM A123/A123M - Standard Specification for Zinc (Hot-Dip Galvanized) Coatings on Iron and Steel Products; 2015.

C. ASTM A653/A653M - Standard Specification for Steel Sheet, Zinc-Coated (Galvanized) or Zinc-Iron Alloy-Coated (Galvannealed) by the Hot-Dip Process; 2015.

D. ASTM A666 - Standard Specification for Annealed or Cold-Worked Austenitic Stainless Steel Sheet, Strip, Plate, and Flat Bar; 2015.

E. ASTM B221 - Standard Specification for Aluminum and Aluminum-Alloy Extruded Bars, Rods, Wire, Profiles, and Tubes; 2014.

F. ASTM B221M - Standard Specification for Aluminum and Aluminum-Alloy Extruded Bars, Rods, Wire, Profiles, and Tubes [Metric]; 2013.

G. NEMA 250 - Enclosures for Electrical Equipment (1000 Volts Maximum); 2014.

H. NEMA ICS 2 - Industrial Control and Systems Controllers, Contactors and Overload Relays Rated 600 Volts; 2000 (R2005), with errata, 2008.

I. NEMA MG 1 - Motors and Generators; 2014.

1.04 SUBMITTALS

A. See Section 013000 - Submittals, for submittal procedures.

B. Product Data: Provide general construction, component connections and details .

C. Shop Drawings: Indicate pertinent dimensioning, anchorage methods, hardware locations, and installation details.

D. Warranty: Submit manufacturer warranty and ensure that forms have been completed in Owner's name and registered with manufacturer.

E. Manufacturer's Instructions: Indicate installation sequence and procedures, adjustment and alignment procedures.

F. Maintenance Data: Indicate lubrication requirements and frequency and periodic adjustments required.

1.05 QUALITY ASSURANCE

A. Manufacturer Qualifications: Company specializing in manufacturing the products specified in this section with minimum three years of documented experience.

B. Installer Qualifications: Company specializing in performing work of type specified and with at least three years documented experience.

C. Products Requiring Electrical Connection: Listed and classified by testing firm acceptable to the authority having jurisdiction as suitable for the purpose specified and indicated.

D. Provide Florida Product Approval information.

1.06 WARRANTY

A. See Section 017800 - Closeout Submittals, for additional warranty requirements.

B. Manufacturer Warranty: Provide five-year manufacturer warranty for three-ply multifilament polyester fabric curtain. Complete forms in City of Port Orange's name and register with manufacturer.

C. Manufacturer Warranty: Provide lifetime manufacturer warranty for counterweights and tension springs. Complete forms in City of Port Orange's name and register with manufacturer.

1.07 PERFORMANCE REQUIREMENTS

A. Provide doors certified to withstand a wind-load pressure determined in accordance with ASCE 7-02 for a wind velocity of 140 mph basic wind speed (ULT), minimum 30 PSF.

B. Cycle Life:
   1. Standard Construction for normal use of up to 20 cycles per day maximum, and a life cycle expectancy of up to 50,000

1.08 WARRANTY

A. Refer to applicable Division 1 specifications sections for any additional warranty requirements and for required warranty submittals at project closeout.

B. Correct defective Work within a five year period after Date of Substantial Completion.

PART 2 PRODUCTS

2.01 MANUFACTURERS

A. Manufacturer:
   1. Cornell Iron Works, Inc.: www.cornelliron.com

B. Alternates:
   1. The Cookson Company: www.cooksondoor.com
   2. Overhead Door Corporation: www.overheaddoor.com
   3. Clopay Corporation: www.clopaydoor.com

2.02 COILING DOORS

A. Model: ESD10

B. Exterior Coiling Doors: Steel slat curtain.
   1. Single thickness slats.
   2. Finish: Galvanex Coating System, color as selected.
   3. Guides: Angles; galvanized steel.
   4. Hood Enclosure: Manufacturer's standard; primed steel.
   5. Manual hand chain lift operation.
   6. Mounting: Surface mounted.

2.03 MATERIALS

A. Curtain Construction: Interlocking slats, insulated.
   1. Slat Ends: Alternate slats fitted with end locks to act as wearing surface in guides and to prevent lateral movement.
   2. Curtain Bottom: Fitted with angles to provide reinforcement and positive contact in closed position.
   3. Weatherstripping: Moisture and rot proof, resilient type, located at jamb edges, bottom of curtain, and where curtain enters hood enclosure of exterior doors.

B. Steel Slats: Minimum minimum 20 gage ASTM A 653/A 653M galvanized steel sheet.
   1. Galvanizing: Minimum G90/Z275 coating.
   2. Slat cavity shall be filled with CFC-free foamed in place, polyurethene insulation.

C. Steel Guides: ASTM A 36/A 36M steel angles, size as required for wind loading, hot-dip galvanized per ASTM A 123/A 123M. Prime paint.

D. Hood Enclosure: Internally reinforced to maintain rigidity and shape.
   1. Prime paint.

E. Hardware:
   1. Latching: Inside mounted, adjustable keeper, spring activated latch bar with feature to keep in locked or retracted position.
   2. Latch Handle: Interior handle.

PART 3 EXECUTION

3.01 EXAMINATION

A. Verify that opening sizes, tolerances and conditions are acceptable.

3.02 COORDINATION

A. Examine drawings to ensure adquate support will be present for product installation.

B. Notify Contractor of requirements for interior wall framing that will support coiling shutters and doors.

C. Contract Sum shall include costs associated with support for products covered by this specification section.

D. Contractor to coordinate with the Owner's access control vendor for future connection of the access control system to overhead door controllers and operators.

3.03 INSTALLATION

A. Install units in accordance with manufacturer's instructions.

B. Use anchorage devices to securely fasten assembly to wall construction and building framing without distortion or stress.

C. Securely and rigidly brace components suspended from structure. Secure guides to structural members only.

D. Fit and align assembly including hardware; level and plumb, to provide smooth operation.

E. Coordinate installation of sealants and backing materials at frame perimeter as specified in Section 079005.

F. Install weatherstripping, weatherstripping, and weatherstripping.

3.04 TOLERANCES

A. Maintain dimensional tolerances and alignment with adjacent work.

B. Maximum Variation From Plumb: 1/16 inch.

C. Maximum Variation From Level: 1/16 inch.

D. Longitudinal or Diagonal Warp: Plus or minus 1/8 inch per 10 ft straight edge.

3.05 ADJUSTING

A. Adjust operating assemblies for smooth and noiseless operation.

3.06 CLEANING

A. Clean installed components.

B. Remove labels and visible markings.

C. Touch-up damaged painted surfaces upon substantial completion.

END OF SECTION

SECTION 092116
GYPSUM BOARD ASSEMBLIES

PART 1 GENERAL

1.01 SECTION INCLUDES

A. Acoustic insulation and sealant.

B. Glass mat faced gypsum board.

C. Joint treatment and accessories.

1.02 RELATED REQUIREMENTS

1.03 REFERENCE STANDARDS

A. ASTM C475/C475M - Standard Specification for Joint Compound and Joint Tape for Finishing Gypsum Board; 2015.

B. ASTM C840 - Standard Specification for Application and Finishing of Gypsum Board; 2013.

C. ASTM C1047 - Standard Specification for Accessories For Gypsum Wallboard and Gypsum Veneer Base; 2014a.

1.04 SUBMITTALS

A. See Section 01 0100 for submittal procedures.

B. Product Data: Provide data on glass mat faced gypsum board, accessories, and joint finishing system.

C. Product Data: Provide manufacturer's data on partition head to structure connectors, showing compliance with requirements.

1.05 QUALITY ASSURANCE

A. Applicator Qualifications: Company specializing in performing gypsum board application and finishing, with minimum 5 years of documented experience.

PART 2 PRODUCTS

2.01 GYPSUM BOARD MATERIALS

A. Manufacturers:
   1. G-P Gypsum Corporation: www.gp.com/gypsum.
   2. Substitutions: Not permitted.

2.02 FIBERGLASS REINFORCED BOARD MATERIALS

A. Glass Mat Gypsum Board: Gypsum panels with moisture-resistant core and coated inorganic fiberglass mat back surface designed to resist growth of mold and mildew, per ASTM D 3273.
   1. Fiberglass Mat Surface Board: Comply with performance requirements of ASTM C 1396/C 1396M for water-resistant gypsum backing board; tapered long edges.
      a. Product: DensArmor Plus manufactured by Georgia Pacific.
      b. Standard Type: Thickness 5/8 inch.

2.03 ACCESSORIES

A. Acoustic Insulation: ASTM C665; preformed glass fiber, friction fit type, unfaced. Thickness: 3-1/2 inch.

B. Acoustic Sealant: Non-hardening, non-skinning, for use in conjunction with gypsum board.

C. Finishing Accessories: ASTM C1047, galvanized steel or rolled zinc, unless otherwise indicated.
   1. Types: As detailed or required for finished appearance.
   2. Special Shapes: In addition to conventional galvanized steel cornerbead and control joints, provide U-bead and L-bead at exposed panel edges.

D. Joint Materials: ASTM C475 and as recommended by gypsum board manufacturer for project conditions.

1. Tape: 2 inch wide, creased paper tape for joints and corners, except as otherwise indicated.
2. Ready-mixed vinyl-based joint compound.
3. Chemical hardening type compound.

E. Anchorage to Substrate: Tie wire, nails, screws, and other metal supports, of type and size to suit application; to rigidly secure materials in place.

PART 3 EXECUTION

3.01 EXAMINATION

A. Verify that project conditions are appropriate for work of this section to commence.

3.02 ACOUSTIC ACCESSORIES INSTALLATION

A. Acoustic Insulation: Place tightly within spaces, around cut openings, behind and around electrical and mechanical items within partitions, and tight to items passing through partitions.

B. Acoustic Sealant: Install in accordance with manufacturer's instructions.
1. Place two beads continuously on substrate before installation of perimeter framing members.
2. Place continuous bead at perimeter of each layer of gypsum board.
3. In non-fire-rated construction, seal around all penetrations by conduit, pipe, ducts, and rough-in boxes.

3.03 GYPSUM BOARD AND GLASS MAT FACED BOARD INSTALLATION

A. Comply with ASTM C 840 and manufacturer's instructions. Install to minimize butt end joints, especially in highly visible locations.

B. Single-Layer Non-Rated: Install gypsum board in most economical direction, with ends and edges occurring over firm bearing.

3.04 INSTALLATION OF TRIM AND ACCESSORIES

A. Control Joints: Place control joints consistent with lines of building spaces and as indicated.
1. Not more than 30 feet apart on walls and ceilings over 50 feet long.

B. Corner Beads: Install at external corners, using longest practical lengths.

C. Edge Trim: Install at locations where gypsum board abuts dissimilar materials and as indicated.

3.05 JOINT TREATMENT

A. Glass Mat Faced Gypsum Board: Use fiberglass joint tape, bedded and finished with chemical hardening type joint compound.

B. Tape, fill, and sand exposed joints, edges, and corners to produce smooth surface ready to receive finishes.
1. Feather coats of joint compound so that camber is maximum 1/32 inch.
2. Taping, filling and sanding is not required at base layer of double layer applications.

3.06 TOLERANCES

A. Maximum Variation of Finished Gypsum Board Surface from True Flatness: 1/8 inch in 10 feet in any direction.

END OF SECTION

SECTION 104400
LIFE SAFETY EQUIPMENT AND ACCESSORIES

PART 1 GENERAL

1.01 SECTION INCLUDES

A. Fire extinguishers.

1.02 REFERENCE STANDARDS

A. NFPA 10 - Standard for Portable Fire Extinguishers; 2013.

B. UL (DIR) - Online Certifications Directory; current listings at database.ul.com.

1.03 PERFORMANCE REQUIREMENTS

A. Conform to NFPA 10.

B. Provide extinguishers classified and labeled by Underwriters Laboratories Inc. for the purpose specified and indicated.

1.04 SUBMITTALS

A. See Section 013000 - Submittals, for submittal procedures.

B. Product Data: Provide extinguisher operational features, color and finish, and anchorage details.

C. Manufacturer's Certificate: Certify that products meet or exceed specified requirements.

D. Maintenance Data: Include test, refill or recharge schedules and re-certification requirements.

PART 2 PRODUCTS

2.01 FIRE EXTINGUISHERS

A. Fire Extinguishers - General: Comply with product requirements of NFPA 10 and applicable codes, whichever is more stringent.

B. Dry Chemical: Stainless steel tank, with pressure gage.
   1. Class 4A:60B:C.
   2. Size 10.
   3. Finish: Baked enamel, red color.

PART 3 EXECUTION

3.01 EXAMINATION

A. Verify existing conditions before starting work.

3.02 INSTALLATION

A. Install all specified products in accordance with manufacturer's instructions.

B. Secure all specified products rigidly in place.

C. Place extinguishers and accessories on wall brackets, as directed.

3.03 CLEANING AND PROTECTION

A. Clean all specified products after installation and prior to Substantial Completion and Owner occupancy.

B. Protect all installed products from damage by subsequent construction activities.

END OF SECTION

SECTION 133419
METAL BUILDING SYSTEMS

PART 1 GENERAL

1.01 SECTION INCLUDES

A. Pre-engineered, shop-fabricated structural steel building.

B. Exterior doors.

1.02 RELATED REQUIREMENTS

A. Section 081113 - Hollow Metal Doors and Frames.

B. Section 083323 - Overhead Coiling Doors.

1.03 REFERENCE STANDARDS

A. AISC 360 - Specification for Structural Steel Buildings; 2010.

B. ASTM A36/A36M - Standard Specification for Carbon Structural Steel; 2014.

C. ASTM A153/A153M - Standard Specification for Zinc Coating (Hot-Dip) on Iron and Steel Hardware; 2009.

D. ASTM A307 - Standard Specification for Carbon Steel Bolts, Studs, and Threaded Rod 60 000 PSI Tensile Strength; 2014.

E. ASTM A325 - Standard Specification for Structural Bolts, Steel, Heat Treated, 120/105 ksi Minimum Tensile Strength; 2014.

F. ASTM A500/A500M - Standard Specification for Cold-Formed Welded and Seamless Carbon Steel Structural Tubing in Rounds and Shapes; 2013.

G. ASTM A653/A653M - Standard Specification for Steel Sheet, Zinc-Coated (Galvanized) or Zinc-Iron Alloy-Coated (Galvannealed) by the Hot-Dip Process; 2015.

H. ASTM A792/A792M - Standard Specification for Steel Sheet, 55% Aluminum-Zinc Alloy-Coated by the Hot-Dip Process; 2010 (Reapproved 2015).

I. ASTM A992/A992M - Standard Specification for Structural Steel Shapes; 2011 (Reapproved 2015).

J. ASTM C665 - Standard Specification for Mineral-Fiber Blanket Thermal Insulation for Light Frame Construction and Manufactured Housing; 2012.

K. ASTM C991 - Standard Specification for Flexible Glass Fiber Insulation for Metal Buildings; 2015.

L. ASTM C1107/C1107M - Standard Specification for Packaged Dry, Hydraulic-Cement Grout (Nonshrink); 2014.

M. ASTM E84 - Standard Test Method for Surface Burning Characteristics of Building Materials; 2015a.

N. AWS A2.4 - Standard Symbols for Welding, Brazing, and Nondestructive Examination; 2012.

O. AWS D1.1/D1.1M - Structural Welding Code - Steel; 2015.

P. MBMA (MBSM) - Metal Building Systems Manual; 2012.

Q. SSPC-Paint 20 - Zinc-Rich Primers (Type I, "Inorganic," and Type II, "Organic"); 2002 (Ed. 2004).

R. UL 580 - Standard for Tests for Uplift Resistance of Roof Assemblies; Current Edition, Including All Revisions.

1.04 DESIGN REQUIREMENTS

A. Installed Thermal Resistance of Wall System: R value of 19.

B. Installed Thermal Resistance of Roof System: R value of 19.

C. Design structural systems according to professionally recognized methods and standards, and the Florida Building Code Eighth Edition (2023) as supplemented by local ammendments.

D. Design members to withstand dead load, and design loads due to pressure and suction of wind calculated in accordance with requirements set forth on structural documents.

E. Provide drainage to exterior for water entering or condensation occurring within wall or roof system.

F. Size and fabricate wall and roof systems free of distortion or defects detrimental to appearance or performance.

G. Provide certification that exterior wall panels comply with the FBC Eighth Edition (2023).

1.05 ADMINISTRATIVE REQUIREMENTS

A. Preinstallation Meeting: Convene one week before starting work of this section.

1.06 SUBMITTALS

A. Product Data: Provide data on profiles, component dimensions, fasteners.

B. Shop Drawings: Indicate assembly dimensions, locations of structural members, connections; wall and roof system dimensions, panel layout, general construction details, anchorages and method of anchorage, installation ; framing anchor bolt settings, sizes, and locations from datum, foundation loads; indicate welded connections with AWS A2.4 welding symbols; indicate net weld lengths; provide professional seal and signature.

C. Samples: Submit two samples of precoated metal panels for each color selected, 12 x 12 inch in size illustrating color and texture of finish.

D. Manufacturer Qualification Statement: Provide documentation showing metal building manufacturer is accredited under IAS AC472.

1. Include statement that manufacturer designs and fabricates metal building system as integrated components and assemblies, including but not limited to primary structural members, secondary members, joints, roof, and wall cladding components specifically designed to support and transfer loads and properly assembled components form a complete or partial building shell.

E. Manufacturer's Instructions: Indicate preparation requirements, anchor bolt placement .

F. Erection Drawings: Indicate members by label, assembly sequence, and temporary erection bracing.

1.07 QUALITY ASSURANCE

A. Design structural components, develop shop drawings, and perform shop and site work under direct supervision of a Professional Structural Engineer experienced in design of this Work.

1. Design Engineer Qualifications: Licensed in Florida.
2. Conform to applicable code for submission of design calculations as required for acquiring permits.
3. Cooperate with regulatory agency or authority and provide data as requested.

B. Perform work in accordance with AISC 360 - Specification for Structural Steel Buildings.

C. Perform welding in accordance with AWS D1.1.

D. Manufacturer Qualifications: Company specializing in manufacturing the Products specified in this section with minimum 5 years documented experience.

E. Erector Qualifications: Company specializing in performing the work of this section with minimum 5 years experience.

1.08 WARRANTY

A. Correct defective Work within a five year period after Date of Substantial Completion.

B. Provide 20 year manufacturer warranty for Roof and Wall Panels.

1. Include coverage for exterior pre-finished surfaces to cover pre-finished color coat against chipping, cracking or crazing, blistering, peeling, chalking, or fading. Include coverage for

weather tightness of building enclosure elements after installation.

PART 2 PRODUCTS

2.01 MANUFACTURERS

A. Pre-Engineered Buildings:
   1. Allied Steel Buildings: www.alliedbuildings.com
   2. Butler Manufacturing Company: www.butlermfg.com/#sle.
   3. American Buildings : www.americanbuildings.com.
   4. Substitutions: See Section 016000 - Product Requirements.

2.02 PRE-ENGINEERED BUILDING

A. Single span rigid frame. with lean-to each side.

B. Primary Framing: Rigid frame of rafter beams and columns, canopy beams, and wind bracing.

C. Secondary Framing: Purlins, and other items detailed.

D. Wall System: Preformed metal panels vertical profile, with sub-girt framing/anchorage assembly, and accessory components.

E. Roof System: Preformed metal panels, to , oriented parallel to slope, with sub-girt framing/anchorage assembly and insulation, and accessory components.

F. Roof Slope: 2 inches in 12 inches.

2.03 PERFORMANCE REQUIREMENTS

A. Installed Thermal Resistance of Wall System: R-value of 19.

B. Installed Thermal Resistance of Roof System: R-value of 19.

C. Provide drainage to exterior for water entering or condensation occurring within wall or roof system.

D. Permit movement of components without buckling, failure of joint seals, undue stress on fasteners or other detrimental effects, when subject to temperature range of ____ degrees F.

2.04 MATERIALS - WALLS AND ROOF

A. Steel Sheet: Hot-dipped galvanized steel sheet, ASTM A653/A653M, SS Grade 33/230, with G90/Z275 coating.

B. Insulation: Semi-rigid glass fiber type, unfaced, ASTM E 84 flame spread index of 25 or less where exposed friction fit, 6 inches thick.

C. Insulation: ASTM C 665 Type I
   1. Facing: Sheet vinyl, .0032 inch thick, white.

D. Joint Seal Gaskets: Manufacturer's standard type.

E. Fasteners: Manufacturer's standard type, galvanized to comply with requirements of ASTM A 153/A 153M, finish to match adjacent surfaces when exterior exposed.

F. Bituminous Paint: Asphaltic type.

G. Sealant: Manufacturer's standard type.

H. Trim, Closure Pieces, Caps, Flashings, Rain Water Diverter: Same material, thickness and finish as exterior sheets; brake formed to required profiles.

2.05 COMPONENTS

A. Doors and Frames: Manufacturer's standard.

B. Overhead Doors and Frames: Manufacturer's standard.

2.06 FABRICATION - FRAMING

A. Fabricate members in accordance with AISC Specification for plate, bar, tube, or rolled structural shapes.

B. Anchor Bolts: Formed with bent shank, assembled with template for casting into concrete.

2.07 FABRICATION - WALL AND ROOF PANELS

A. Siding: Minimum .022 inch metal thickness, match existing profile indicated, 1 1/4 inch deep, lapped edges fitted with continuous gaskets.

B. Roofing: Minimum .022 inch metal thickness, match existing profile, lapped edges fitted with continuous gaskets.

C. Girts/Purlins: Rolled formed structural shape to receive siding, roofing and liner sheet.

D. Internal and External Corners: Same material thickness and finish as adjacent material, profile brake formed to required angles. Back brace mitered internal corners with .022 inch thick sheet.

E. Expansion Joints: Same material and finish as adjacent material where exposed, .022 inch thick, manufacturer's standard brake formed type, of profile to suit system.

F. Flashings, Closure Pieces, Fascia: Same material and finish as adjacent material, profile to suit system.

G. Fasteners: To maintain load requirements and weather tight installation, same finish as cladding, non-corrosive type.

2.08 FINISHES

A. Framing Members: Clean, prepare, and shop prime. Do not prime surfaces to be field welded.

B. Exterior Surfaces of Wall Components and Accessories: Precoated Finish: 1 mil 70% Kynar 500 coating, color as selected from manufacturer's standard range.

C. Interior Surfaces of Wall Components and Accessories: Precoated enamel on steel of manufacturer's standard finish, color as selected from manufacturer's standard range.

PART 3 EXECUTION

3.01 EXAMINATION

A. Verify that foundation, floor slab, mechanical and electrical utilities, and placed anchors are in correct position

3.02 ERECTION - FRAMING

A. Provide for erection and wind loads. Provide temporary bracing to maintain structure plumb and in alignment until completion of erection and installation of permanent bracing.

B. Set column base plates with non-shrink grout to achieve full plate bearing.

C. Do not field cut or alter structural members without approval.

D. After erection, prime welds, abrasions, and surfaces not shop primed.

3.03 ERECTION - WALL AND ROOF PANELS

A. Install in accordance with manufacturer's instructions.

B. Exercise care when cutting prefinished material to ensure cuttings do not remain on finish surface.

C. Fasten cladding system to structural supports, aligned level and plumb.

D. Locate end laps over supports. End laps minimum 2 inches. Place side laps over bearing.

E. Provide expansion joints where indicated.

F. Use concealed fasteners.

G. Install insulation and vapor retarder per manufacturer's recommendations. Place wire mesh under vapor retarder for support between framing members.

3.04 INSTALLATION - ACCESSORIES

A. Install door frames and doors in accordance with manufacturer's instructions.

3.05 TOLERANCES

A. Framing Members: 1/4 inch from level; 1/8 inch from plumb.

B. Siding and Roofing: 1/8 inch from true position.

END OF SECTION

SECTION 310000
EARTHWORK

PART 1 - GENERAL

1.01 RELATED DOCUMENTS

A. Drawings and general provisions of Contract, including General and Supplementary Conditions and Division 1 Specification Sections, apply to this Section.

1.02 SUMMARY

A. This Section includes the following:
   1. Preparing of subgrade for building slabs, walks, grassed areas, and pavements.
   2. Supplying and placement of fill for buildings, paving, and grassed areas.
   3. Excavating and backfilling of trenches within building lines.
   4. Excavating and backfilling for underground mechanical and electrical utilities, buried mechanical and electrical appurtenances, potable water systems, fire water systems, storm sewage systems, sanitary sewage systems, and other underground utilities.

1.03 DEFINITIONS

A. Excavation consists of removal of material encountered to subgrade elevations indicated and subsequent disposal of materials removed.

B. Unauthorized excavation consists of removal of materials beyond indicated subgrade elevations or dimensions without specific direction of Architect. Unauthorized excavation, as well as remedial work directed by Architect, shall be at Contractor's expense.

C. Under footings, foundation bases, or retaining walls, fill unauthorized excavation by extending indicated bottom elevation of footing or base to excavation bottom, without altering required top elevation. Lean concrete fill may be used to bring elevations to proper position, when acceptable to Architect.

D. In locations other than those above, backfill and compact unauthorized excavations as specified for authorized excavations of same classification, unless otherwise directed by Architect.

E. Additional Excavation: When excavation has reached required subgrade elevations, notify Architect, who will make an inspection of conditions. If Architect determines that bearing materials at required subgrade elevations are unsuitable, continue excavation until suitable bearing materials are encountered and replace excavated material as directed by Architect. The Contract Sum may be adjusted by an appropriate Contract Modification.

F. Removal of unsuitable material and its replacement as directed will be paid on basis of Conditions of the Contract relative to changes in work.

G. Subgrade: The undisturbed earth or the compacted soil layer immediately below granular subbase, drainage fill, or topsoil materials.

H. Structure: Buildings, foundations, slabs, tanks, curbs, or other man-made stationary features occurring above or below ground surface.

1.04 SUBMITTALS

A. Test Reports: Submit the following reports directly to Architect from the testing services, with copy to Contractor and the Owner (UBCI):

B. Test reports on fill material.

C. Test reports on borrow material.

D. Verification of suitability of each footing subgrade material, in accordance with specified requirements.

E. Field reports; in-place soil density tests.

F. One optimum moisture-maximum density curve for each type of soil encountered.

G. Report of actual unconfined compressive strength and/or results of bearing tests of each strata tested.

1.05 QUALITY ASSURANCE

A. Codes and Standards: Perform excavation work in compliance with applicable requirements of authorities having jurisdiction.

B. Testing and Inspection Service: Owner will employ and pay for a qualified independent geotechnical testing and inspection laboratory to perform soil testing and inspection service during earthwork operations.

1.06 PROJECT CONDITIONS

A. Site Information: Data in subsurface investigation reports was used for the basis of the design and are available to the Contractor for information only. Conditions are not intended as representations or warranties of accuracy or continuity between soil borings. The Owner will not be responsible for interpretations or conclusions drawn from this data by Contractor.

B. Subsurface soil exploration and Geotechnical Engineering Evaluation prepared by Universal Engineering Sciences, report number 2079842, dated May 7, 2024, is included at the end of this section.

C. Additional test borings and other exploratory operations may be performed by Contractor, at the Contractor's option; however, no change in the Contract Sum will be authorized for such additional exploration. When additional test borings or other operations are made and results available, submit a copy to the Architect, immediately.

D. Existing Utilities: Locate existing underground utilities within the limits of construction prior to beginning work. If utilities are indicated to remain in place, provide adequate means of support and protection during earthwork operations.

E. Should uncharted, or incorrectly charted, piping or other utilities be encountered during excavation, consult utility owner immediately for directions. Cooperate with Owner and utility companies in keeping respective services and facilities in operation. Repair damaged utilities to satisfaction of utility owner.

F. Do not interrupt existing utilities serving facilities occupied by Owner or others, during occupied hours, except when permitted in writing by Architect and then only after acceptable temporary utility services have been provided.
   1. Provide minimum of 48-hour notice to Architect, and receive written notice to proceed before interrupting any utility.

G. Demolish and completely remove from site existing underground utilities indicated to be removed. Coordinate with utility companies for shutoff of services if lines are active.

H. Protection of Persons and Property: Barricade open excavations occurring as part of this work and post with warning lights.

I. Protect structures, utilities, sidewalks, pavements, and other facilities from damage caused by settlement, lateral movement, undermining, washout, and other hazards created by earthwork operations.

J. Perform excavation by hand within dripline of large trees to remain. Protect root systems from damage or dryout to the greatest extent possible. Maintain moist condition for root system and cover exposed roots with moistened burlap.

PART 2 - PRODUCTS

2.01 SOIL MATERIALS

A. Satisfactory soil materials are defined as those complying with ASTM D2487 soil classification groups GW, GP, GM, SM, SW, and SP.

B. Unsatisfactory soil materials are defined as those complying with ASTM D2487 soil classification groups GC, SC, ML, MH, CL, CH, OL, OH, and PT.

C. Subbase Material: Naturally or artificially graded mixture of natural or crushed gravel, crushed stone, crushed slag, and natural or crushed sand.

D. Fill Materials within building pads and pavement: Inorganic, non-plastic granular soil, fine sand (SP) and fine sand with silt (SP-SM) containing less than 5% fines passing the No. 200 Standard Sieve.

E. Fill Materials within all other areas including grassed areas: Inorganic, non-plastic granular soil containing less than 5% fines passing the No. 200 Standard Sieve (clean sands).

F. All fill materials should be evaluated and tested by the Geotechnical Engineer prior to placement to determine if they are suitable for the intended use.

PART 3 - EXECUTION

3.01 GENERAL

A. All earthwork, including excavation and compaction, shall be accomplished in accordance with recommendations in the Subsurface soil exploration and Geotechnical Engineering Evaluation prepared by Universal Engineering Sciences, report number 2079842, dated May 7, 2024.

B. Contractor shall be responsible for providing all fill material necessary to achieve the finished grades shown on the plans. No excavated on-site materials may be used for fill material. Contractor shall import fill as necessary to achieve finished grades, and shall haul off and dispose of any unsuitable fill excavated from this site, with both importing and disposal and hauling for each at no additional expense to the Owner.

3.02 EXCAVATION

A. Excavation is unclassified and includes excavation to subgrade elevations indicated, regardless of character of materials and obstructions encountered.

B. Earth Excavation includes excavation of pavements and other obstructions visible on surface; underground structures, utilities, and other items indicated to be demolished and removed; together with earth and other materials encountered that are not classified as rock or unauthorized excavation.

3.03 STABILITY OF EXCAVATIONS

A. General: Comply with local codes, ordinances, and requirements of agencies having jurisdiction.

B. Slope sides of excavations to comply with local codes, ordinances, and requirements of agencies having jurisdiction. Shore and brace where sloping is not possible because of space restrictions or stability of material excavated. Maintain sides and slopes of excavations in safe condition until completion of backfilling.

C. Shoring and Bracing: Provide materials for shoring and bracing, such as sheet piling, uprights, stringers, and cross braces, in good serviceable condition. Maintain shoring and bracing in excavations regardless of time period excavations will be open. Extend shoring and bracing as excavation progresses.

3.04 DEWATERING

A. Prevent surface water and subsurface or ground water from flowing into excavations and from flooding project site and surrounding area.

B. Do not allow water to accumulate in excavations. Remove water to prevent softening of foundation bottoms, undercutting footings, and soil changes detrimental to stability of subgrades and foundations. Provide and maintain pumps, well points, sumps, suction and discharge lines, and other dewatering system components necessary to convey water away from excavations.

C. Establish and maintain temporary drainage ditches and other diversions outside excavation limits to convey rain water and water removed from excavations to collecting or runoff areas. Do not use trench excavations as temporary drainage ditches.

D. Use of a pump greater than 4-inch diameter will require a permit from the St. John's River Water Management District. The Contractor shall be responsible for obtaining all permits and approvals required for dewatering.

3.05 STORAGE OF EXCAVATED MATERIALS

A. Stockpile excavated materials acceptable for backfill and fill where directed. Place, grade, and shape stockpiles for proper drainage.

B. Locate and retain soil materials away from edge of excavations. Do not store within drip line of trees indicated to remain.

C. Dispose of excess excavated soil material and materials not acceptable for use as backfill or fill.

3.06 EXCAVATION FOR STRUCTURES

A. Conform to elevations and dimensions shown within a tolerance of plus or minus 0.10 foot, and extending a sufficient distance from footings and foundations to permit placing and removal of concrete formwork, installation of services, and other construction and for inspection.

B. Excavations for footings and foundations: Do not disturb bottom of excavation. Excavate by hand to final grade just before concrete reinforcement is placed. Trim bottoms to required lines and grades to leave solid base to receive other work. Any unsuitable material shall be over-excavated and stockpiled separately with other deleterious materials.

C. Excavation for Underground Tanks, Basins, and Mechanical or Electrical Structures: Conform to elevations and dimensions indicated within a tolerance of plus or minus 0.10 foot; plus a sufficient distance to permit placing and removal of concrete formwork, installation of services, and other construction and for inspection. Do not disturb bottom of excavations, intended for bearing surface.

3.07 EXCAVATION FOR PAVEMENTS

A. Cut surface under pavements to comply with cross-sections, elevations and grades as indicated.

B. The entire parking and driveway areas shall be stripped and grubbed of all surface vegetation, roots, and topsoil.

C. The natural subgrade layer shall be proofrolled with nonvibratory equipment. All material in areas that yield during the compaction operation shall be removed and replaced with suitable compacted fill.

D. The subbase soils shall be compacted in accordance with recommendations of the Subsurface soil exploration and Geotechnical Engineering Evaluation prepared by Universal Engineering Sciences, report number 2079842, dated May 7, 2024.

3.08 TRENCH EXCAVATION FOR PIPES AND CONDUIT

A. Excavate trenches to uniform width, sufficiently wide to provide ample working room and a minimum of 6 to 9 inches of clearance on both sides of pipe or conduit.

B. Excavate trenches and conduit to depth indicated or required to establish indicated slope and invert elevations and to support bottom of pipe or conduit on undisturbed soil.

C. For pipes or conduit less than 6 inches in nominal size, and for flat-bottomed, multiple-duct conduit units, do not excavate beyond indicated depths. Hand-excavate bottom cut to accurate elevations and support pipe or conduit on undisturbed soil.

D. For pipes and equipment 6 inches or larger in nominal size, shape bottom of trench to fit bottom of pipe for 90 degrees (bottom 1/4 of the circumference). Fill depressions with tamped sand backfill. At each pipe joint, dig bell holes to relieve pipe bell of loads ensure continuous bearing of pipe barrel on bearing surface.

3.09 COLD WEATHER PROTECTION

A. Protect excavation bottoms against freezing when atmospheric temperature is less than 35 deg.F.

3.10 BACKFILL AND FILL

A. General: Place soil material in layers to required subgrade elevations, for each area classification listed below, using materials specified in Part 2 of this Section.

B. Under grassed areas, use satisfactory excavated or borrow material.

C. Under walks and pavements, use subbase material, satisfactory excavated or borrow material, or a combination.

D. Under steps, use subbase material.

E. Under building slabs, use subbase material.

F. Under piping and conduit and equipment, use subbase materials where required over rock bearing surface, for correction of unauthorized excavation, and for stabilization of wet trench conditions. Shape excavation bottom to fit bottom 90 degrees of cylinder.

G. Backfill trenches with concrete where trench excavations pass within 18 inches of column or wall footings and that are carried below bottom of such footings or that pass under wall footings. Place concrete to level of bottom of adjacent footing.
   1. Concrete is specified in Division 3.
   2. Do not backfill trenches until tests and inspections have been made and backfilling is authorized by Architect. Use care in backfilling to avoid damage or displacement of pipe systems.
   3. Backfill excavations as promptly as work permits, but not until completion of the following:

H. Acceptance of construction below finish grade including, where applicable, dampproofing, waterproofing, and perimeter insulation.

I. Inspection, testing, approval, and recording locations of underground utilities have been performed and recorded.

J. Removal of concrete formwork.

K. Removal of shoring and bracing, and backfilling of voids with satisfactory materials. Cut off temporary sheet piling driven below bottom of structures and remove in manner to prevent settlement of the structure or utilities, or leave in place if required.

L. Removal of trash and debris from excavation.

M. Permanent or temporary horizontal bracing is in place on horizontally supported walls.

3.11 PLACEMENT AND COMPACTION

A. Ground Surface Preparation: Remove vegetation, debris, unsatisfactory soil materials, obstructions, and deleterious materials from ground surface prior to placement of fills. Plow strip, or break up sloped surfaces steeper than 1 vertical to 4 horizontal so that fill material will bond with existing surface.

B. When existing ground surface has a density less than that specified under "Compaction" for particular area classification, break up ground surface, pulverize, moisture-condition to optimum moisture content, and compact to required depth and percentage of maximum density.

C. Any structural fill which shall be required to raise the building areas to finish grade shall be placed and compacted in accordance with recommendations of the Subsurface soil exploration and Geotechnical Engineering Evaluation prepared by Universal Engineering Sciences, report number 2079842, dated May 7, 2024.

D. Soils placed adjacent to footings or walls shall be carefully compacted with light rubber tired or vibratory plate compactors to avoid damage to the footings or walls. Large compaction equipment shall not be utilized adjacent to completed portions of the structure.

E. Fill placement: Any fill required to backfill excavations, trenches, or to bring the site to required grade shall be properly placed and compacted in accordance with recommendations of the Subsurface soil exploration and Geotechnical Engineering Evaluation prepared by Universal Engineering Sciences, report number 2079842, dated May 7, 2024. Further, fill slopes shall not exceed 4 horizontal to 1 vertical. All fill placed in utility line trenches and adjacent to walls or footings beneath slabs on grade shall also be properly placed and compacted to the specified density.

F. Prior to beginning the compaction process, moisture contents within the foundation soils shall be controlled so that they will approach the optimum required for maximum compatibility. If additional water is required to increase moisture contents, the water shall be applied in such a

manner that it ill not cause erosion or disturbance of the surface soil.

G. Fill shall not be placed over any natural in-place soils until the natural deposits have been compacted as specified above. All proposed sources of structural fill shall be approved by the independent testing service and the Architect prior to their placement within the building areas.

H. Field tests shall be conducted during the construction phase of the project to demonstrate that the in-place soil densification and compaction operations are carried out in accordance with the intent of the project specifications.

3.12 GRADING

A. General: Uniformly grade areas within limits of grading under this section, including adjacent transition areas. Smooth finished surface within specified tolerances, compact with uniform levels or slopes between points where elevations are indicated or between such points and existing grades.

B. Grading Outside Building Lines: Grade areas adjacent to building lines to drain away from structures and to prevent ponding. Finish surfaces free from irregular surface changes and as follows:

C. Lawn or Unpaved Areas: Finish areas to receive topsoil to within not more than 0.10 foot above or below required subgrade elevations.

D. Walks: Shape surface of areas under walks to line, grade, and cross-section, with finish surface not more than 0.10 foot above or below required subgrade elevation.

E. Pavements: Shape surface of areas under pavement to line, grade, and cross-section, with finish surface not more than 1/2 inch above or below required subgrade elevation.

F. Grading Surface of Fill under Building Slabs: Grade smooth and even, free of voids, compacted as specified, and to required elevation. Provide final grades within a tolerance of 1/2 inch when tested with a 10-foot straightedge.

G. Compaction: After grading, compact subgrade surfaces to the depth and indicated percentage of maximum or relative density for each area classification.

3.13 PAVEMENT SUBBASE COURSE

A. General: Subbase course consists of placing subbase material, in layers of specified thickness, over subgrade surface to support a pavement base course.
   1. Refer to other Division 2 sections for paving specifications.
   2. Grade Control: During construction, maintain lines and grades including crown and cross-slope of subbase course.
   3. Shoulders: Place shoulders along edges of subbase course to prevent lateral movement. Construct shoulders of acceptable soil materials, placed in such quantity to compact to thickness of each subbase course layer. Compact and roll at least a 12-inch width of shoulder simultaneous with the compaction and rolling of each layer of subbase course.
   4. Placing: Place subbase course material on prepared subgrade in layers of uniform thickness, conforming to indicated cross-section and thickness. Maintain optimum moisture content for compacting subbase material during placement operations.
   5. When a compacted subbase course is indicated to be 6 inches thick or less, place material in a single layer. When indicated to be more than 6 inches thick, place material in equal layers, except no single layer more than 6 inches or less than 3 inches in thickness when compacted.

3.14 FIELD QUALITY CONTROL

A. Quality Control Testing During Construction: Allow testing service to inspect and approve each subgrade and fill layer before further backfill or construction work is performed.

B. Perform field density tests in accordance with recommendations of the Subsurface soil exploration and Geotechnical Engineering Evaluation prepared by Universal Engineering Sciences, report number 2079842, dated May 7, 2024.

3.15 EROSION CONTROL

A. Provide erosion control methods in accordance with requirements of local authority of jurisdiction and the St. John's River Water Management District.

B. Take all necessary measures throughout the duration of the project to control erosion and silting of compacted subgrades, retention pond areas and other graded areas. Construction of drainage facilities as well as performance of other work which will contribute to the control of erosion and siltation shall be carried out in conjunction with earthwork and other landscaping operations as described herein.

C. Erosion and siltation control measures shall include, but not be limited to siltation fences, straw bales, construction of temporary berms or slope drains and the use of temporary mulches, mats or seeding as approved by the Architect.

D. Erosion and siltation control materials, methods and installation procedures shall be in accordance with current FDOT "Standard Specifications for Road and Bridge Construction".

3.16 MAINTENANCE

A. Protection of Graded Areas: Protect newly graded areas from traffic and erosion. Keep free of trash and debris.

B. Repair and reestablish grades in settled, eroded, and rutted areas to specified tolerances.

C. Reconditioning Compacted Areas: Where completed compacted areas are disturbed by subsequent construction operations or adverse weather, scarify surface, reshape, and compact to required density prior to further construction.

D. Settling: Where settling is measurable or observable at excavated areas during general project warranty period, remove surface (pavement, lawn, or other finish), add backfill material, compact, and replace surface treatment. Restore appearance, quality, and condition of surface or finish to match adjacent work, and eliminate evidence of restoration to greatest extent possible.

3.17 DISPOSAL OF EXCESS AND WASTE MATERIALS

A. Removal from Owner's Property: Remove waste materials, including unacceptable excavated material, trash, and debris, and dispose of it legally off Owner's property. Burning of materials on Owner's property or on adjacent property is strictly prohibited.

END OF SECTION 02200

GEOTECHNICAL EVALUATION

Port Orange Forestry Barn
Port Orange, Volusia County, Florida

UES Project No. 0430.2400084.0000
UES Report No. 2079842

May 7, 2024

Prepared For:

Mr. David Ogle Jr.
Hall and Ogle Architects
208 Magnolia Avenue
Daytona Beach, Florida 32114

Prepared By:

UES
911 Beville Road, Suite 3
South Daytona, Florida 32119

Materials Testing
Geotechnical Engineering
Environmental
Building Sciences & Safety
Inspections & Code Compliance
Virtual Design Consulting

May 7, 2024

Mr. David Ogle Jr.
Hall and Ogle Architects
208 Magnolia Avenue
Daytona Beach, Florida 32114

Reference: **GEOTECHNICAL EVALUATION**
Port Orange Forestry Barn
Port Orange, Volusia County, Florida
UES Project No. 0430.2400084.0000
UES Report No. 2079842

Dear Mr. Ogle:

Universal Engineering Sciences, Inc. has completed the geotechnical evaluation for the subject project. This report contains the results of our evaluation, an engineering interpretation of these with respect to the project characteristics described to us, and recommendations for shallow foundation support and site preparation.

We appreciate the opportunity to have worked with you on this project and look forward to a continued association. Please do not hesitate to contact us if you should have any questions, or if we may further assist you as your plans proceed.

Respectfully Submitted,
UNIVERSAL ENGINEERING SCIENCES, LLC
Certificate of Authorization No. 549

CODY D. WILSON LICENSE NO. 96709 STATE OF FLORIDA PROFESSIONAL ENGINEER

5/7/24

Cody D. Wilson, P.E.
Geotechnical Department Manager
Florida Registration No. 96709

Michael A. Navarra
Project Manager

Attachments

CW/cme

TABLE OF CONTENTS

1.0 PROJECT DESCRIPTION 1

2.0 PURPOSE AND SCOPE 1

2.1 PURPOSE 1
2.2 FIELD INVESTIGATION 1
2.3 SOIL CLASSIFICATION 2

3.0 FINDINGS 2

3.1 SUBSURFACE CONDITIONS 2
3.2 GROUNDWATER 2

4.0 FOUNDATION DESIGN RECOMMENDATIONS 2

4.1 GENERAL 2
4.2 STRUCTURE FOUNDATIONS 2
4.3 SITE PREPARATION FOR SHALLOW FOUNDATIONS 4

5.0 CONSTRUCTION RECOMMENDATIONS 5

6.0 LIMITATIONS 5

APPENDICES

APPENDIX A

Boring Location Plan A-1
Boring Logs A-2
Key to Boring Logs Sheet A-3

APPENDIX B

Geotechnical Business Council Document B-1
Constraints and Restrictions B-2

1.0 PROJECT DESCRIPTION

Project information has been provided to us in discussions with you. We understand the proposed project will consist of constructing a one-story structure on the subject lot. We anticipate that the proposed structure will consist of a pre-engineered metal building supported on a monolithic slab. We understand the maximum wall loads will not exceed 4 kips per linear foot. We anticipate less than two feet of fill will be placed within the structure area.

Our recommendations are based on the above considerations. If any of this information is incorrect, or if you anticipate any changes, inform Universal Engineering Sciences so we may review our recommendations.

2.0 PURPOSE AND SCOPE

2.1 PURPOSE

The purposes of this investigation were:

- to investigate the general subsurface conditions at the site;
- to interpret and review the subsurface conditions with respect to the proposed construction; and
- to provide geotechnical engineering recommendations for foundation design.

This report presents an evaluation of site conditions on the basis of traditional geotechnical procedures for site characterization. The recovered samples were not examined, either visually or analytically, for chemical composition or environmental hazards. Universal Engineering Sciences would be pleased to perform these services, at your request.

Our investigation was confined to the zone of soil likely to be stressed by the proposed construction. Our work did not address the potential for surface expression of deep geological conditions, such as sinkhole development related to karst activity. A deep geological evaluation requires a more extensive range of field and engineering services than performed for this study.

2.2 FIELD INVESTIGATION

2.2.1 Borings

The subsurface conditions within the anticipated structure footprint were investigated with one (1) Standard Penetration Test (SPT) boring, B-1, advanced to a depth of approximately 15 feet each below existing grade. We performed the SPT boring according to the procedures of ASTM D-1586.

The boring was located by our field personnel using taped measurements and should be considered accurate only to the degree implied by the method of measurement used. The approximate location of the boring is presented on the attached Boring Location Plan in Appendix A.

Samples obtained from the boring were transported to our laboratory for further evaluation. Samples of the soil encountered will be held in our laboratory for your inspection for 60 days unless we are notified otherwise.

2.3 SOIL CLASSIFICATION

The soil samples recovered from the soil boring were returned to our laboratory and then a UES engineer visually examined and reviewed the field descriptions. The soil was classified in accordance with the USCS soil classification system. Tests consisting of percent passing the No. 200 sieve were performed on samples to help aid in the classification process of the soils.

3.0 FINDINGS

3.1 SUBSURFACE CONDITIONS

The boring location and detailed subsurface conditions are illustrated in Appendix A: Boring Location Plan and Subsurface Profiles. The classifications and descriptions shown on the profiles are based upon visual characterizations of the recovered soil samples and laboratory tests. Also, see Appendix A: Key to Borings Log, for further explanation of the symbols and placement of data on the Profiles. The discussion below summarizes the soil conditions encountered during our exploration.

The SPT boring generally indicated approximately 6 inches of topsoil underlain by intermittent layers of medium dense fine sand with trace silt (SP) and fine sand with silt (SP-SM) to the boring termination depth of approximately 15.0 feet below existing grade.

3.2 GROUNDWATER

The groundwater level was encountered at a depth of approximately 3.5 feet below existing grade at Boring Location B-1. The depths of the measured groundwater levels are noted on the Subsurface Profiles. It should be anticipated the groundwater levels will fluctuate due to seasonal climatic variations, tidal fluctuations, surface water runoff patterns, construction operations, and other interrelated factors.

4.0 FOUNDATION DESIGN RECOMMENDATIONS

4.1 GENERAL

The following recommendations are made based upon a review of the attached soil test data, our understanding of the proposed construction, and experience with similar projects and subsurface conditions. If the structural loadings, construction locations, or grading information change from those discussed previously, we request the opportunity to review and possibly amend our recommendations with respect to those changes.

Additionally, if subsurface conditions are encountered during construction, which were not encountered in the boring, report those conditions immediately to us for observation and recommendations.

4.2 STRUCTURE FOUNDATIONS

Based on the results of our subsurface exploration, we consider the subsurface conditions at the site favorable for support of the proposed structure when constructed on a properly designed shallow foundation system. Provided the soils are prepared in accordance with the Site Preparation Section of this report, the following parameters may be used for foundation design.

4.2.1 Bearing Pressure

The maximum allowable net soil bearing pressure for shallow foundation should not exceed 2,500 pounds per square foot (p.s.f.). Net bearing pressure is defined as the soil bearing pressure at the base of the foundation in excess of the natural overburden pressure. The foundation should be designed based upon the maximum load that could be imposed by all loading conditions.

4.2.2 Foundation Size

The minimum widths recommended for any isolated column footing and continuous wall footings are 24 inches and 18 inches, respectively. For a monolithic slab, the minimum width recommended for thickened slab beneath columns and load bearing walls are 18 inches and 12 inches, respectively. Even though the maximum allowable soil bearing pressure may not be achieved, these width recommendations should control the size of the foundations.

4.2.3 Bearing Depth

The exterior foundation should bear at a depth of at least 18 inches below the exterior final grades and the interior footings should bear at a depth of at least 18 inches below the finish floor elevation to provide confinement to the bearing level soils. We recommend stormwater and surface water be diverted away from the building exterior, both during and after construction, to reduce the possibility of erosion beneath the exterior footings.

4.2.4 Bearing Material

The foundation may bear on compacted structural fill. The bearing level soils, after compaction, should exhibit densities of at least 95 percent of the maximum dry density of the bearing soils as determined by ASTM D-1557 (Modified Proctor), to the depth described subsequently in the Site Preparation section of the report. In addition to compaction, the bearing soils must exhibit stability and be free of “pumping” conditions.

4.2.5 Settlement Estimates

Post-construction settlement of the structure will be influenced by several interrelated factors, such as (1) subsurface stratification and strength/compressibility characteristics of the bearing soils; (2) footing size, bearing level, applied loads, and resulting bearing pressures beneath the foundations; (3) site preparation and earthwork construction techniques used by the contractor, and (4) external factors, including but not limited to vibration from offsite sources and groundwater fluctuations beyond those normally anticipated for the naturally-occurring site and soil conditions which are present.

Our settlement estimates for the structure are based upon the use of successful adherence to the site preparation recommendations presented later in this report. Any deviation from these recommendations could result in an increase in the estimated post-construction settlement of the structures.

Due to the sandy nature of the surficial soils, following the compaction operations, we expect a significant portion of settlement to be elastic in nature. This settlement is expected to occur relatively quickly, upon application of the loads, during and immediately following construction.

Using the recommended maximum bearing pressure, the assumed maximum structural loads, and the field test data which we have correlated to the strength and compressibility characteristics of the subsurface soils, we estimate the total settlements of the structures to be approximately one inch or less.

Differential settlement results from differences in applied bearing pressures and the variations in the compressibility characteristics of the subsurface soils. Based on the subsurface conditions as determined by our boring, it is anticipated that differential settlements will be within tolerable limits.

4.3 SITE PREPARATION FOR SHALLOW FOUNDATIONS

We recommend the following site preparation procedures for the building area:

1. Prior to construction, the location of existing underground utility lines within the construction area should be established. Provisions should then be made to relocate interfering utilities to appropriate locations. It should be noted that if underground pipes are not properly removed or plugged, they may serve as conduits for subsurface erosion which may subsequently lead to excessive settlement of overlying structures.

2. Strip the proposed construction limits of all grass, roots, topsoil, and other deleterious materials within and 5 feet beyond the perimeter of the proposed structures. Expect minimal clearing and grubbing.

3. Compact the exposed surface using tracked dozer or vibratory equipment. **We recommend that vibratory equipment be operated in static mode within 100 feet of any existing structures.** The upper two feet of soils below the exposed surface within the building area should be improved to achieve a minimum compaction requirement of 95% of the Modified Proctor Test (ASTM D-1557). We recommend the compacted soils exhibit moisture content within 2 percent of the soils optimum moisture content as determined by the Modified Proctor Test (ASTM D-1557). Should the soils experience pumping and soil strength loss during the compaction operations, compaction work should be immediately terminated and (1) the disturbed soils removed and backfilled with dry structural fill soils which are then compacted, or (2) the excess moisture content within the disturbed soils allowed to dissipate before recompacting.

4. Test the compacted surface for compliance at a minimum of one location per 2,500 square feet of each building area, or at a minimum of 3 locations.

5. Place the fill material, as required. The fill should consist of "clean," fine sand with less than 5 percent soil fines. You may use fill materials with soil fines between 5 percent and 10 percent, but strict moisture control may be required. Place fill in uniform 10 to 12-inch loose lifts and compact each lift to a minimum density of 95 percent of the Modified Proctor maximum dry density. We recommend the compacted soils exhibit moisture content within 2 percent of the soils optimum moisture content as determined by the Modified Proctor Test (ASTM D-1557). If light compaction equipment is used, we recommend the lift thickness be reduced to 8-inch-thick lifts.

6. Perform compliance tests within each lift of fill at a minimum of one location per lift per 2,500 square feet of each building area, or at a minimum of 3 locations.

7. Compact and test footing cuts for compaction to a depth of one foot below bearing level. We recommend that you test one out of every four (25 percent) column footings and perform one test per every 50 linear feet of wall footing. Compaction operations in confined areas, such as footing excavations, can best be performed with a lightweight vibratory sled or other hand-held compaction equipment.

5.0 CONSTRUCTION RECOMMENDATIONS

We recommend the owner retain Universal Engineering Sciences to perform construction materials tests and observations on this project. Field tests and observations include verification of foundation subgrades by monitoring filling operations and performing quality assurance tests on the placement of compacted natural soils and structural fill. We can also perform concrete testing, pavement section testing, structural steel testing and other construction materials testing services.

The geotechnical engineering design does not end with the advertisement of the construction documents. The design is an on-going process throughout construction. Because of our familiarity with the site conditions and the intent of the engineering design, we are most qualified to address problems that might arise during construction in a timely and cost-effective manner.

6.0 LIMITATIONS

During the early stages of most construction projects, geotechnical issues not addressed in this report may arise. Because of the natural limitations inherent in working with the subsurface, it is not possible for a geotechnical engineer to predict and address all possible problems. An Association of Engineering Firms Practicing in the Geosciences (ASFE) publication, "Important Information about Your Geotechnical Engineering Report" appears in Appendix B and will help explain the nature of geotechnical issues. Further, we present documents in Appendix B: Constraints and Restrictions, to bring to your attention the potential concerns and the basic limitations of a typical geotechnical report.

APPENDIX A

UES™

LEGEND

APPROXIMATE LOCATION OF STANDARD PENETRATION TEST (SPT) BORING

GRAPHIC SCALE
0 30 60
(IN FEET)
1 INCH ≈ 60 ft.

UES

TITLE: BORING LOCATION PLAN			SCALE: 1" ≈ 60'
PROJECT: GEOTECHNICAL EVALUATION PORT ORANGE FORESTRY BARN PORT ORANGE, FLORIDA			PAGE/FIG. NO.: A-1
DRAWN BY: MKL	DATE: 05/06/24	PROJECT NO.: 0430.2400084.0000	
CHECKED BY: BP	DATE: 05/06/24	REPORT NO.: 2079842	

B-1

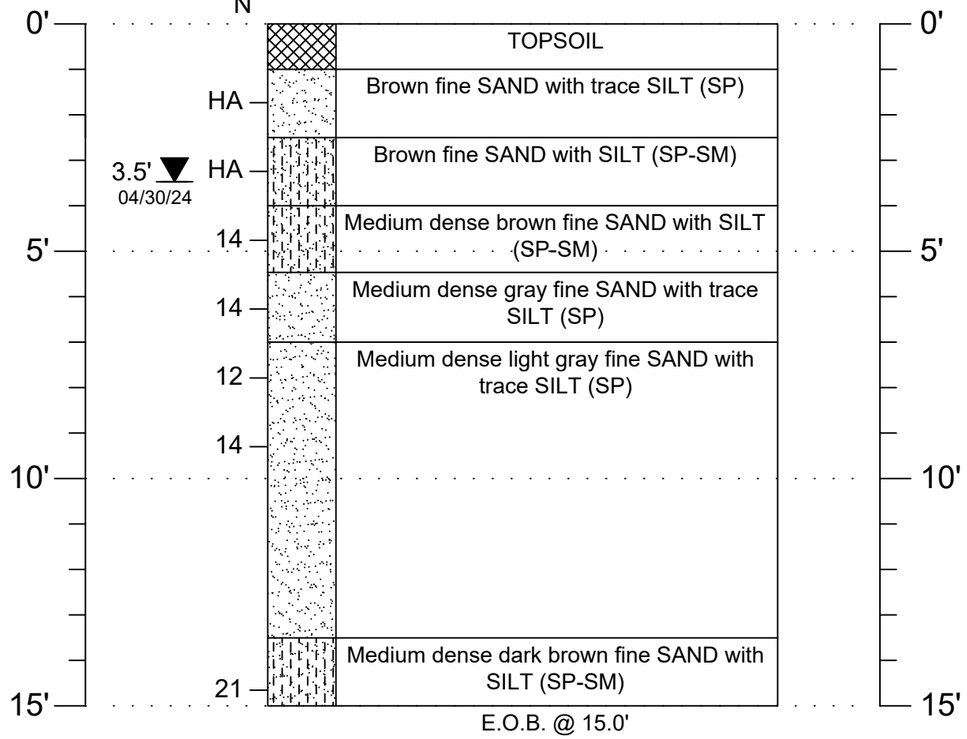

Fine SAND (SP)

Fine SAND with SILT (SP-SM)

Topsoil (PT) ... some to many ORGANICS (PT), sometimes DEBRIS

NOTES:

▼	Measured Groundwater Level 24 (+) Hours Subsequent to Time of Drilling
(SP)	Unified Soil Classification System
EOB	End of Boring
N	Penetr. Resistance, Blows/ft.
HA	Hand Auger Method
WOH	Weight of Hammer
Kv	Coefficient of Permeability, (ft/day)
-200	% Passing No. 200 Sieve

UES™

PROJECT:
GEOTECHNICAL EVALUATION
PORT ORANGE FORESTRY BARN
PORT ORANGE, FLORIDA

TITLE:
SUBSURFACE PROFILE

DRAWN BY:	MKL	DATE:	05/07/24	PROJECT NO.:	0430.2400084.0000	SCALE: NA (in feet)	PAGE/FIG. NO.: A-2
CHECKED BY:	BP	DATE:	05/07/24	REPORT NO.:	2079842		

UES

KEY TO BORING LOGS

SYMBOLS AND ABBREVIATIONS

SYMBOL	DESCRIPTION
N-Value	No. of Blows of a 140-lb. Weight Falling 30 Inches Required to Drive a Standard Spoon 1 Foot
WOR	Weight of Drill Rods
WOH	Weight of Drill Rods and Hammer
▯	Sample from Auger Cuttings
☒	Standard Penetration Test Sample
■	Thin-wall Shelby Tube Sample (Undisturbed Sampler Used)
RQD	Rock Quality Designation
▼	Stabilized Groundwater Level
▽	Seasonal High Groundwater Level (also referred to as the W.S.W.T.)
NE	Not Encountered
GNE	Groundwater Not Encountered
BT	Boring Terminated
-200 (%)	Fines Content or % Passing No. 200 Sieve
MC (%)	Moisture Content
LL	Liquid Limit (Atterberg Limits Test)
PI	Plasticity Index (Atterberg Limits Test)
NP	Non-Plastic (Atterberg Limits Test)
K	Coefficient of Permeability
Org. Cont.	Organic Content
G.S. Elevation	Ground Surface Elevation

UNIFIED SOIL CLASSIFICATION SYSTEM

MAJOR DIVISIONS			GROUP SYMBOLS	TYPICAL NAMES
COARSE GRAINED SOILS More than 50% retained on the No. 200 sieve	GRAVELS 50% or more of coarse fraction retained on No. 4 sieve	CLEAN GRAVELS	GW	Well-graded gravels and gravel-sand mixtures, little or no fines
			GP	Poorly graded gravels and gravel-sand mixtures, little or no fines
		GRAVELS WITH FINES	GM	Silty gravels and gravel-sand-silt mixtures
			GC	Clayey gravels and gravel-sand-clay mixtures
	SANDS More than 50% of coarse fraction passes No. 4 sieve	CLEAN SANDS 5% or less passing No. 200 sieve	SW	Well-graded sands and gravelly sands, little or no fines
			SP	Poorly graded sands and gravelly sands, little or no fines
		SANDS with 12% or more passing No. 200 sieve	SM	Silty sands, sand-silt mixtures
			SC	Clayey sands, sand-clay mixtures
FINE-GRAINED SIOLS 50% or more passes the No. 200 sieve	SILTS AND CLAYS Liquid limit 50% or less		ML	Inorganic silts, very fine sands, rock flour, silty or clayey fine sands
			CL	Inorganic clays of low to medium plasticity, gravelly clays, sandy clays, lean clays
			OL	Organic silts and organic silty clays of low plasticity
	SILTS AND CLAYS Liquid limit greater than 50%		MH	Inorganic silts, micaceous or diamicaceous fine sands or silts, elastic silts
			CH	Inorganic clays or clays of high plasticity, fat clays
			OH	Organic clays of medium to high plasticity
			PT	Peat, muck and other highly organic soils

Based on the material passing the 3-inch (75 mm) sieve

Use dual symbol (such as SP-SM and SP-SC) for soils with more than 5% but less than 12% passing the No. 200 sieve

RELATIVE DENSITY

(Sands and Gravels)

Very loose □Less than 4 Blow/Foot
Loose - 4 to 10 Blows/Foot
Medium Dense - 11 to 30 Blows/Foot
Dense □31 to 50 Blows/Foot
Very Dense □More than 50 Blows/Foot

CONSISTENCY

(Silts and Clays)

Very Soft □Less than 2 Blows/Foot
Soft □2 to 4 Blows/Foot
Firm □5 to 8 Blows/Foot
Stiff □9 to 15 Blows/Foot
Very Stiff - 16 to 30 Blows/Foot
Hard □More than 30 Blows/Foot

RELATIVE HARDNESS

(Limestone)

Soft □100 Blows for more than 2 Inches
Hard □100 Blows for less than 2 Inches

MODIFIERS

Thes □ □ □□□□□□□ **P**r□vide **O**ur **E**□□□ □□□ of □□□ **A**mo□nt of **M**□□□□
C□□□□□□□□□□ **(S**□□or **C**□□□ **S**□□□ **P**□□□□□□□**)** □□ □□□ **S**□□**S**ample
Trace □5% or less
With Silt or With Clay □6% to 11%
Silty or Clayey □12% to 30%
Very Silty or Very Clayey □31% to 50%

These **M**□□□□□□□ **P**□□□□□ **O**ur **E**□□□ □□□ of □□□ **A**mount of **O**□ganic
C□□ □□□□□□□ □□ □□□ **S**□□**S**□□ □□□
Trace □Less than 3%
Few - 3% to 4%
Some - 5% to 8%
Many □Greater than 8%

These **M**□□□□□□□ **P**r□vide **O**ur **E**□□□ □□□ of □□□ **A**mount of **O**□□□□
Componen □□ **(S**□□□**, G**□□□□**, E**□**.)** □□ □□□ **S**□□**S**□□ □□□
Trace □5% or less
Few □6% to 12%
Some - 13% to 30%
Many □31% to 50%

APPENDIX B

UES™

Important Information about This

Geotechnical-Engineering Report

Subsurface problems are a principal cause of construction delays, cost overruns, claims, and disputes.

While you cannot eliminate all such risks, you can manage them. The following information is provided to help.

Geotechnical Services Are Performed for Specific Purposes, Persons, and Projects

Geotechnical engineers structure their services to meet the specific needs of their clients. A geotechnical-engineering study conducted for a civil engineer may not fulfill the needs of a constructor — a construction contractor — or even another civil engineer. Because each geotechnical- engineering study is unique, each geotechnical-engineering report is unique, prepared *solely* for the client. No one except you should rely on this geotechnical-engineering report without first conferring with the geotechnical engineer who prepared it. *And no one — not even you* — should apply this report for any purpose or project except the one originally contemplated.

Read the Full Report

Serious problems have occurred because those relying on a geotechnical-engineering report did not read it all. Do not rely on an executive summary. Do not read selected elements only.

Geotechnical Engineers Base Each Report on a Unique Set of Project-Specific Factors

Geotechnical engineers consider many unique, project-specific factors when establishing the scope of a study. Typical factors include: the client's goals, objectives, and risk-management preferences; the general nature of the structure involved, its size, and configuration; the location of the structure on the site; and other planned or existing site improvements, such as access roads, parking lots, and underground utilities. Unless the geotechnical engineer who conducted the study specifically indicates otherwise, do not rely on a geotechnical-engineering report that was:

- not prepared for you;
- not prepared for your project;
- not prepared for the specific site explored; or
- completed before important project changes were made.

Typical changes that can erode the reliability of an existing geotechnical-engineering report include those that affect:

- the function of the proposed structure, as when it's changed from a parking garage to an office building, or from a light-industrial plant to a refrigerated warehouse;
- the elevation, configuration, location, orientation, or weight of the proposed structure;
- the composition of the design team; or
- project ownership.

As a general rule, *always* inform your geotechnical engineer of project changes—even minor ones—and request an assessment of their impact. *Geotechnical engineers cannot accept responsibility or liability for problems that occur because their reports do not consider developments of which they were not informed.*

Subsurface Conditions Can Change

A geotechnical-engineering report is based on conditions that existed at the time the geotechnical engineer performed the study. *Do not rely on a geotechnical-engineering report whose adequacy may have been affected by*: the passage of time; man-made events, such as construction on or adjacent to the site; or natural events, such as floods, droughts, earthquakes, or groundwater fluctuations. *Contact the geotechnical engineer before applying this report to determine if it is still reliable.* A minor amount of additional testing or analysis could prevent major problems.

Most Geotechnical Findings Are Professional Opinions

Site exploration identifies subsurface conditions only at those points where subsurface tests are conducted or samples are taken. Geotechnical engineers review field and laboratory data and then apply their professional judgment to render an opinion about subsurface conditions throughout the site. Actual subsurface conditions may differ — sometimes significantly — from those indicated in your report. Retaining the geotechnical engineer who developed your report to provide geotechnical-construction observation is the most effective method of managing the risks associated with unanticipated conditions.

A Report's Recommendations Are Not Final

Do not overrely on the confirmation-dependent recommendations included in your report. *Confirmation-dependent recommendations are not final,* because geotechnical engineers develop them principally from judgment and opinion. Geotechnical engineers can finalize their recommendations *only* by observing actual subsurface conditions revealed during construction. *The geotechnical engineer who developed your report cannot assume responsibility or liability for the report's confirmation-dependent recommendations if that engineer does not perform the geotechnical-construction observation required to confirm the recommendations' applicability.*

A Geotechnical-Engineering Report Is Subject to Misinterpretation

Other design-team members' misinterpretation of geotechnical-engineering reports has resulted in costly

problems. Confront that risk by having your geotechnical engineer confer with appropriate members of the design team after submitting the report. Also retain your geotechnical engineer to review pertinent elements of the design team's plans and specifications. Constructors can also misinterpret a geotechnical-engineering report. Confront that risk by having your geotechnical engineer participate in prebid and preconstruction conferences, and by providing geotechnical construction observation.

Do Not Redraw the Engineer's Logs

Geotechnical engineers prepare final boring and testing logs based upon their interpretation of field logs and laboratory data. To prevent errors or omissions, the logs included in a geotechnical-engineering report should *never* be redrawn for inclusion in architectural or other design drawings. Only photographic or electronic reproduction is acceptable, *but recognize that separating logs from the report can elevate risk.*

Give Constructors a Complete Report and Guidance

Some owners and design professionals mistakenly believe they can make constructors liable for unanticipated subsurface conditions by limiting what they provide for bid preparation. To help prevent costly problems, give constructors the complete geotechnical-engineering report, *but* preface it with a clearly written letter of transmittal. In that letter, advise constructors that the report was not prepared for purposes of bid development and that the report's accuracy is limited; encourage them to confer with the geotechnical engineer who prepared the report (a modest fee may be required) and/or to conduct additional study to obtain the specific types of information they need or prefer. A prebid conference can also be valuable. *Be sure constructors have sufficient time* to perform additional study. Only then might you be in a position to give constructors the best information available to you, while requiring them to at least share some of the financial responsibilities stemming from unanticipated conditions.

Read Responsibility Provisions Closely

Some clients, design professionals, and constructors fail to recognize that geotechnical engineering is far less exact than other engineering disciplines. This lack of understanding has created unrealistic expectations that have led to disappointments, claims, and disputes. To help reduce the risk of such outcomes, geotechnical engineers commonly include a variety of explanatory provisions in their reports. Sometimes labeled "limitations," many of these provisions indicate where geotechnical engineers' responsibilities begin and end, to help others recognize their own responsibilities and risks. *Read these provisions closely.* Ask questions. Your geotechnical engineer should respond fully and frankly.

Environmental Concerns Are Not Covered

The equipment, techniques, and personnel used to perform an *environmental* study differ significantly from those used to perform a *geotechnical* study. For that reason, a geotechnical-engineering report does not usually relate any environmental findings, conclusions, or recommendations; e.g., about the likelihood of encountering underground storage tanks or regulated contaminants. *Unanticipated environmental problems have led to numerous project failures.* If you have not yet obtained your own environmental information, ask your geotechnical consultant for risk-management guidance. *Do not rely on an environmental report prepared for someone else.*

Obtain Professional Assistance To Deal with Mold

Diverse strategies can be applied during building design, construction, operation, and maintenance to prevent significant amounts of mold from growing on indoor surfaces. To be effective, all such strategies should be devised for the *express purpose* of mold prevention, integrated into a comprehensive plan, and executed with diligent oversight by a professional mold-prevention consultant. Because just a small amount of water or moisture can lead to the development of severe mold infestations, many mold- prevention strategies focus on keeping building surfaces dry. While groundwater, water infiltration, and similar issues may have been addressed as part of the geotechnical- engineering study whose findings are conveyed in this report, the geotechnical engineer in charge of this project is not a mold prevention consultant; *none of the services performed in connection with the geotechnical engineer's study were designed or conducted for the purpose of mold prevention. Proper implementation of the recommendations conveyed in this report will not of itself be sufficient to prevent mold from growing in or on the structure involved.*

Rely, on Your GBC-Member Geotechnical Engineer for Additional Assistance

Membership in the Geotechnical Business Council of the Geoprofessional Business Association exposes geotechnical engineers to a wide array of risk-confrontation techniques that can be of genuine benefit for everyone involved with a construction project. Confer with you GBC-Member geotechnical engineer for more information.

GEOTECHNICAL BUSINESS COUNCIL
of the Geoprofessional Business Association

8811 Colesville Road/Suite G106, Silver Spring, MD 20910
Telephone: 301/565-2733 Facsimile: 301/589-2017
e-mail: info@geoprofessional.org www.geoprofessional.org

Copyright 2015 by Geoprofessional Business Association (GBA). Duplication, reproduction, or copying of this document, or its contents, in whole or in part, by any means whatsoever, is strictly prohibited, except with GBA's specific written permission. Excerpting, quoting, or otherwise extracting wording from this document is permitted only with the express written permission of GBA, and only for purposes of scholarly research or book review. Only members of GBA may use this document as a complement to or as an element of a geotechnical-engineering report. Any other firm, individual, or other entity that so uses this document without being a GBA member could be commiting negligent or intentional (fraudulent) misrepresentation.

CONSTRAINTS & RESTRICTIONS

The intent of this document is to bring to your attention the potential concerns and the basic limitations of a typical geotechnical report.

WARRANTY

Universal Engineering Sciences has prepared this report for our client for his exclusive use, in accordance with generally accepted soil and foundation engineering practices, and makes no other warranty either expressed or implied as to the professional advice provided in the report.

UNANTICIPATED SOIL CONDITIONS

The analysis and recommendations submitted in this report are based upon the data obtained from soil borings performed at the locations indicated on the Boring Location Plan. This report does not reflect any variations which may occur between these borings.

The nature and extent of variations between borings may not become known until excavation begins. If variations appear, we may have to re-evaluate our recommendations after performing on-site observations and noting the characteristics of any variations.

CHANGED CONDITIONS

We recommend that the specifications for the project require that the contractor immediately notify Universal Engineering Sciences, as well as the owner, when subsurface conditions are encountered that are different from those present in this report.

No claim by the contractor for any conditions differing from those anticipated in the plans, specifications, and those found in this report, should be allowed unless the contractor notifies the owner and Universal Engineering Sciences of such changed conditions. Further, we recommend that all foundation work and site improvements be observed by a representative of Universal Engineering Sciences to monitor field conditions and changes, to verify design assumptions and to evaluate and recommend any appropriate modifications to this report.

MISINTERPRETATION OF SOIL ENGINEERING REPORT

Universal Engineering Sciences is responsible for the conclusions and opinions contained within this report based upon the data relating only to the specific project and location discussed herein. If the conclusions or recommendations based upon the data presented are made by others, those conclusions or recommendations are not the responsibility of Universal Engineering Sciences.

CHANGED STRUCTURE OR LOCATION

This report was prepared in order to aid in the evaluation of this project and to assist the architect or engineer in the design of this project. If any changes in the design or location of the structure as outlined in this report are planned, or if any structures are included or added that are not discussed in the report, the conclusions and recommendations contained in this report shall not be considered valid unless the changes are reviewed and the conclusions modified or approved by Universal Engineering Sciences.

USE OF REPORT BY BIDDERS

Bidders who are examining the report prior to submission of a bid are cautioned that this report was prepared as an aid to the designers of the project and it may affect actual construction operations.

Bidders are urged to make their own soil borings, test pits, test caissons or other investigations to determine those conditions that may affect construction operations. Universal Engineering Sciences cannot be responsible for any interpretations made from this report or the attached boring logs with regard to their adequacy in reflecting subsurface conditions which will affect construction operations.

STRATA CHANGES

Strata changes are indicated by a definite line on the boring logs which accompany this report. However, the actual change in the ground may be more gradual. Where changes occur between soil samples, the location of the change must necessarily be estimated using all available information and may not be shown at the exact depth.

OBSERVATIONS DURING DRILLING

Attempts are made to detect and/or identify occurrences during drilling and sampling, such as: water level, boulders, zones of lost circulation, relative ease or resistance to drilling progress, unusual sample recovery, variation of driving resistance, obstructions, etc.; however, lack of mention does not preclude their presence.

WATER LEVELS

Water level readings have been made in the drill holes during drilling and they indicate normally occurring conditions. Water levels may not have been stabilized at the last reading. This data has been reviewed and interpretations made in this report. However, it must be noted that fluctuations in the level of the groundwater may occur due to variations in rainfall, temperature, tides, and other factors not evident at the time measurements were made and reported. Since the probability of such variations is anticipated, design drawings and specifications should accommodate such possibilities and construction planning should be based upon such assumptions of variations.

LOCATION OF BURIED OBJECTS

All users of this report are cautioned that there was no requirement for Universal Engineering Sciences to attempt to locate any man-made buried objects during the course of this exploration and that no attempt was made by Universal Engineering Sciences to locate any such buried objects. Universal Engineering Sciences cannot be responsible for any buried man-made objects which are subsequently encountered during construction that are not discussed within the text of this report.

TIME

This report reflects the soil conditions at the time of exploration. If the report is not used in a reasonable amount of time, significant changes to the site may occur and additional reviews may be required.

UES

SECTION 313116
TERMITE CONTROL

PART 1 GENERAL

1.01 SECTION INCLUDES

A. Chemical soil treatment.

1.02 REFERENCE STANDARDS

A. Title 7, United States Code, 136 through 136y - Federal Insecticide, Fungicide and Rodenticide Act; 2006.

1.03 QUALITY ASSURANCE

A. Installer Qualifications: Company specializing in performing this type of work and:
   1. Having minimum of 2 years documented experience.
   2. Approved by manufacturer of treatment materials.
   3. Licensed in Florida.

1.04 REGULATORY REQUIREMENTS

A. Conform to applicable code for requirements for application, and comply with EPA regulations.

B. Provide certificate of compliance from authority having jurisdiction indicating approval of toxicants.

1.05 SEQUENCING

A. Apply toxicant immediately prior to installation of vapor barrier under slabs-on-grade.

1.06 WARRANTY

A. See Section 017800 - Closeout Submittals, for additional warranty requirements.

B. Provide five year installer's warranty against damage to building caused by termites.
   1. Include coverage for repairs to building and to contents damaged due to building damage. Repair damage and, if required, re-treat.

PART 2 PRODUCTS

2.01 MATERIALS

A. Manufacturers:
   1. Syngenta Professional Products; Product DemonMax: or equal www.syngentaprofessionalproducts.com.
   2. Substitutions: See Section 016000 - Product Requirements.

B. Toxicant Chemical: EPA approved; synthetically color dyed to permit visual identification of treated soil.

2.02 MIXES

A. Mix toxicant to manufacturer's instructions.

PART 3 EXECUTION

3.01 EXAMINATION

A. Verify that soil surfaces are sufficiently dry to absorb toxicant, and ready to receive treatment.

B. Verify final grading is complete.

3.02 APPLICATION

A. Comply with requirements of U.S. EPA and applicable State and local codes.

B. Spray apply toxicant in accordance with manufacturer's instructions.

C. Apply toxicant at following locations:
   1. Under Slabs-on-Grade.
   2. At Both Sides of Foundation Surface.

D. Under slabs, apply toxicant immediately prior to installation of vapor barrier.

E. At foundation walls, apply toxicant immediately prior to finish grading work outside foundations.

F. Apply extra treatment to structure penetration surfaces such as pipe or ducts, and soil penetrations such as grounding rods or posts.

G. Re-treat disturbed treated soil with same toxicant as original treatment.

H. If inspection or testing identifies the presence of termites, re-treat soil and re-test.

3.03 PROTECTION

A. Do not permit soil grading over treated work.

END OF SECTION

Reference Provider Name: Ginger Corless

Company: City of Ocoee Contact Information: vcorless@ocoee.org

Reference provided for (Firm Name): SA Casey Construction

1) Describe the scope of work of the contract awarded by your company to this firm.

They were the prime contractor for Ocoee's award winning Healthy West orange Wellness Park.

2) Were you satisfied with the final product of this project? ☑ Yes ☐ No
If not, please provide details of any deficiencies below:

3) Did the contractor communicate well with you (respond in timely manner to calls, requests, etc.)?

☑ Yes ☐ No

4) Was the project completed on time and within budget? ☑ Yes ☐ No

5) How was your experience working with this contractor? What frustrations, if any, did you have working with the contractor?

The construction manager from SA Casey was very easy to work with and responsive to any issue that we had either during or even afterwards.

6) If you had a warranty repair/replacement, was it handled promptly and to your satisfaction?

☑ Yes ☐ No

7) Overall, would you recommend this contractor? ☑ Yes ☐ No

8) Additional comments?

It was interesting that I received this yesterday. I actually had a meeting meeting with them today regarding the park. We had damage from Hurricane Milton and they have been very responsive in helping us make the repairs.

(ATTACHMENT 1) - SCHEDULE OF UNIT PRICING

ITB #25-02 Construction of Forestry Building

Completed (Attachment 1) Schedule of Unit Pricing MUST be included with Bid Submission

Bidders must complete all field shown in green	
Name of Business:	
Contact Person:	
Email Address:	
Authorized Signature:	

ALL UNIT PRICING IN ACCORDANCE WITH SECTION 3 - SCOPE OF WORK		
Description	**Unit of Measure**	**Price**
<u>Base Bid</u>: Construction of a new 5,226 Sq. Ft. metal Forestry Management storage building and 6,631 Sq. Ft. of 6" stabilized access path on the City's wellfield property.	**Lump Sum**	**$**
<u>Additive Alternate #1</u>: Install 3" of recycled asphalt pavement on top of the 6.631 Sq. Ft. 6" stabilized base.	**Lump Sum**	**$**

ITB #25-02 Construction of Forestry Building

January 14, 2025 @ 2:30 PM

BID TABULATION

ITEM #	DESCRIPTION	UNIT OF MEASURE	NON-RESPONSIVE C2 Solutions, Inc.	Paul Culver Construction, Inc.	The Watauga Company	NON-RESPONSIVE Boulevard Contractors Corp.	A.G. Pifer Construction, Inc.	SA Casey Construction, Inc.
1	Base Bid: Construction of a new 5,226 Sq. Ft. metal Forestry Management storage building and 6,631 Sq. Ft. of 6" stabilized access path	Lump Sum	$827,924.00	$689,970.00	$679,000.00	$813,719.00	$688,000.00	$649,661.70
2	Additive Alternative #1: Install 3" of recycled asphalt pavement on top of the 6,631 Sq. Ft. 6" stabilized base.	Lump Sum	$31,300.00	$45,000.00	$25,000.00	$20,747.00	$21,098.40	$19,252.42

DISCLAIMER: THIS BID TABULATION INDICATES ONLY THE BIDS AS RECEIVED. ALL BIDS ARE SUBJECT TO VERIFICATION FOR ACCURACY AND FOR SPECIFICATION AND CONTRACT COMPLIANCE. NO CONCLUSIONS ABOUT CONTRACT AWARDS SHOULD BE DRAWN FROM THESE PRELIMINARY TABULATIONS.

Lead Buyer

Witness

ITB 25-02 Construction of Forestry Building
Form 7.1 Bid Submittal Checklist
Form 7.2 – Bidder’s Acknowledgement Form
EXCEPTIONS
Form 7.3 – Addendum and Change Order Procedure Acknowledgement
Form 7.4 – Drug Free Preference Statement
Form 7.5 – Public Entity Crimes Statement
Form 7.6 – Anti-Collusion Form
Form 7.7 – Statement of Bidder's Qualifications
Form 7.8 – Professional References for Previous Experience
Form 7.9 – List of Subcontractors
Form 7.10 Scrutinized Companies Certification
Form 7.11 - Local Business Affidavit of Eligibility
Form 7.12 - E-Verify Affidavit
PROOF OF E-VERIFY ENROLLMENT
Form 7.13 Debarment, Suspension and Other Responsibility Matters
Form 7.14 Affidavit of Compliance with Section 287.138
Form 7.15 No Bid Response
Appendix A, 44 C.F.R. Part 18 - Certification Regarding Lobbying
Attachment 1 - Schedule of Unit Pricing
Original Bid Bond or certified check
Current Bonding Capacity Letter
General Contractor License
Submission of one (1) original maked "Original" and one (1) digital

Responsive Submittal

C2 Solutions, Inc.	The Watauga Company	Boulevard Contractors Corp	A.G. Pifer	SA Casey Construction, Inc.
x	x	x	x	x
x	x	x	x	x
None	None	None	None	None
	x	x	x	x
x	x	x	x	x
x	x	x	x	x
x	x	x	x	x
	x	x - missing F, J, K	x	x
x missing p. 2	x	x	x	x
x	x	x	x	x
x	x	x	x	x
x	x	x	x	x
x	x	x	x	x
	x	x	x	x
x	x	x	x	x
x	x	x	x	x
N/A	N/A	N/A	N/A	N/A
x	x	x	x	x
x	x	x	x	x
not completed by surety	x	copy of bid bond	x	x
	x	outdated letter	x	x
x	x	x	x	x
x	x		x	x

No	**Yes**	**No (declined request to send in missing info)**	**Yes**	**Yes**

Paul Culver Construction, Inc.
X
X
None
x
x
x
x
x
x
x
x
x
x
x
x
x
N/A
x
X
x
x
x
x

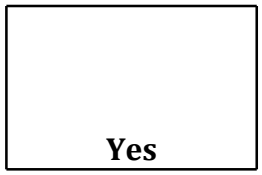
Yes

CITY OF PORT ORANGE, FLORIDA

INVITATION TO BID
ITB #25-02
CONSTRUCTION OF FORESTRY BUILDING

City of Port Orange
Purchasing Division
Prepared by: Chip Kent
December 13, 2024:

Bid Due Date & Time: January 14, 2025 @ 2:30 PM

City of Port Orange, Florida
1000 City Center Circle, Port Orange, FL 32129
(386) 506-5740
purchdiv@port-orange.org ; www.port-orange.org

Legal Notice to Bidders

ITB #25-02
Construction of Forestry Building

Notice is hereby given that the City of Port Orange is soliciting bids for ITB#25-02 Construction of Forestry Building. Bids will be accepted in the City Clerk's office, Port Orange City Hall, 1000 City Center Circle, Port Orange, Florida 32129 until **2:30 PM Eastern Standard Time (EST) on JANUARY 14, 2025** which may be amended by addendum issued by the City. All untimely bids will not be considered and will be returned to the Bidder unopened. All bids will be evaluated to ensure they contain all required forms in order to deem the Bidder responsive or non-responsive. **Bids will be opened and read aloud at 2:30 PM EST in Council Chambers.**

There will be a non-mandatory pre-bid conference and site visit for the project at **10:00 AM EST** on **December 20, 2024** at City Hall, Council Chambers (1st floor), 1000 City Center Circle, Port Orange, FL 32129. All attendees to the pre-bid conference and site visit must sign in. The representative of each Bidder shall be an authorized employee of the Bidder and MUST sign in accordingly. Bidders are urged to obtain bid documents and familiarize themselves with the documents prior to the pre-bid conference.

A Bid Guarantee in the form of a Bid Bond executed by the Bidder and an acceptable surety or a certified check or bank draft payable to the City of Port Orange, Florida in an amount equal to five percent (5%) of the proposed bid must be submitted with each bid. If awarded, the Bidder must also be able to obtain both payment and performance bonds equal to one hundred percent (100%) of project value from a surety company licensed in Florida and must submit proof of their present bonding capacity with their submitted bid package in the form of a current (not older than 3 months) letter from Bidder's bonding agent. Bidder's failure to include the bonding capacity letter with bid package may result in rejection of Bidder's submittal.

DESCRIPTION: The Base Bid is for the Construction of a new 5,226 Sq Ft. metal Forestry building and 6,631 Sq. Ft. of 6" stabilized access path on the City's wellfield property.

Additive Alternate #1 is for the Installation of 3" of recycled asphalt pavement on top of the 6,631 Sq. Ft. 6" stabilized base.

Bidders must be a commercial entity licensed to do business in the State of Florida and perform the services identified herein. Bidders must be properly registered and licensed to provide the services identified in the scope of work by all applicable state and local agencies.

All bids are solicited and shall be made pursuant to the Code of Ordinances, City of Port Orange, Chapter 2, Article VI, Division 2, Section 2-263, and all bids will be evaluated in accordance with the provisions thereof. Code of Ordinances, City of Port Orange is on file in the Office of the City Clerk, City Hall, 1000 City Center Circle, Port Orange, Florida 32129 and at www.municode.com.

Copies of the bid documents, requirements, scope of service and all other pertinent information necessary to submit a complete package may be obtained electronically from the City of Port Orange Purchasing web page at www.port-orange.org/bids.aspx and DemandStar via their website at www.demandstar.com .

All questions shall be directed **in writing** to Chip Kent, Purchasing Agent at ckent@port-orange.org and purchdiv@port-orange.org and reference "Questions on ITB #25-02 Construction of Forestry Building" in the subject line. Last day for questions will be December 27, 2024 by 5:00 PM EST.

The Cone of Silence begins with the issuance of the solicitation document and continues until City Council meets to make a final decision on an award. During this time Bidders, suppliers, contractors and sub-contractors are prohibited from all communications regarding the solicitation with City staff, City consultants, City legal counsel, City agents, or elected officials. Any Bidder who initiates any discussions or attempts to influence a member or members of the aforementioned shall be disqualified from continued participation in the procurement process with regard to that particular solicitation. While the Cone of Silence is in effect, all communications from potential Bidders, suppliers, contractors and sub-contractors must be directed to the Purchasing Division @ purchdiv@port-orange.org.

Cut along the outer border and affix this label to the outside of your sealed bid envelope/package to identify it as a "Sealed Bid". Be sure to include the name of the company submitting the bid where requested.

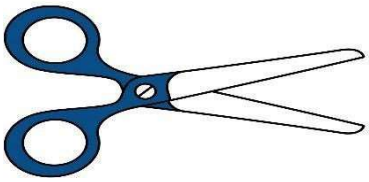

SEALED BID – DO NOT OPEN

SEALED BID NO.: **ITB #25-02**

BID TITLE: **CONSTRUCTION OF FORESTRY BUILDING**

DUE DATE/TIME: **JANUARY 14, 2025 AT 2:30 PM EST**

SUBMITTED BY: _____
(Name of Company)

BIDDER'S ADDRESS: _____

_____

DELIVER TO: **CITY OF PORT ORANGE CITY CLERK'S OFFICE**
ATTN: CHIP KENT, PURCHASING AGENT
PURCHASING DIVISION
1000 CITY CENTER CIRCLE
PORT ORANGE, FL 32129

DATE/TIME RECEIVED:_____
(To be stamped by Clerk's Office)

Contents

SECTION 1 – PURPOSE AND OVERVIEW 5
SECTION 2 – INSTRUCTIONS TO BIDDERS 5
SECTION 3 – SCOPE OF WORK 8
SECTION 4 – STANDARD PURCHASE DEFINITIONS 9
SECTION 5 – GENERAL TERMS AND CONDITIONS 11
SECTION 6 – SPECIAL REQUIREMENTS/INSTRUCTIONS 30
SECTION 7 – REQUIRED FORMS 32
- **FORM 7.1 – BID SUBMITTAL CHECKLIST** 32
- **FORM 7.2 – BIDDER'S ACKNOWLEDGEMENT** 33
- **FORM 7.3 – ADDENDUM AND CHANGE ORDER PROCEDURE ACKNOWLEDGEMENT** 34
- **FORM 7.4 – DRUG-FREE PREFERENCE STATEMENT** 35
- **FORM 7.5 – SWORN STATEMENT ON PUBLIC ENTITY CRIMES** 36
- **FORM 7.6 – ANTI-COLLUSION** 37
- **FORM 7.7 – STATEMENT OF BIDDER'S QUALIFICATIONS** 38
- **FORM 7.8 – PROFESSIONAL REFERENCES FOR PREVIOUS EXPERIENCE** 39
- **FORM 7.9 – LISTING OF SUBCONTRACTORS** 41
- **FORM 7.10 - SCRUTINIZED COMPANIES CERTIFICATION** 42
- **FORM 7.11 – LOCAL BUSINESS AFFIDAVIT OF ELIGIBILITY** 43
- **FORM 7.12 – E-VERIFY AFFIDAVIT** 44
- **FORM 7.13 – CERTIFICATION REGARDING DEBARMENT** 45
- **FORM 7.14 - AFFIDAVIT OF COMPLIANCE WITH F.S. 287.138** 46
- **FORM 7.15 – NO SUBMITTAL RESPONSE** 47

APPENDIX A - 44 C.F.R. PART 18 CERTIFICATION REGARDING LOBBYING 48
(ATTACHMENT 1) – SCHEDULE OF UNIT PRICING 49
BID BOND 50
PAYMENT & PERFORMANCE BOND (for informational purposes only) 52
LEASED EMPLOYEE AFFIDAVIT (for informational purposes only) 55
AFFIDAVIT REGARDING WORKERS' COMPENSATION (for informational purposes only) 56
HUMAN TRAFFICKING AFFIDAVIT (for informational purposes only) 57
CITY OF PORT ORANGE CONTRACT DOCUMENTS (for informational purposes only) 58

SECTION 1 – PURPOSE AND OVERVIEW

The purpose of this Invitation to Bid (ITB) is to solicit competitive sealed bids from Firms or Companies (Bidders) for construction of the new Forestry Building.

It is the intent and purpose of the City of Port Orange (City) that this Invitation to Bid promotes competitive selection. It shall be the Bidder's responsibility to advise the Purchasing Division of any language, requirements, etc. or any combination thereof that inadvertently restricts or limits the requirements stated in this ITB to a single source.

SECTION 2 – INSTRUCTIONS TO BIDDERS

Bidders desiring to provide services, as described herein shall submit sealed bids, including one (1) original and one (1) digital (flash drive) version in PDF format, in conformance with the detailed submittal instructions.

TIMELINE (Eastern Standard Time)

The City reserves the right to alter dates as needed.

DESCRIPTION	DATE
Date of distribution	December 13, 2024
Non-mandatory pre-bid conference and site visit	December 20, 2024 @10:00 AM
Deadline for questions	December 27, 2025 by 5:00 PM
Addendum posting (if needed)	January 3, 2025
Bids due	January 14, 2025 by 2:30 PM
City Council meeting for approval of Recommendation of Award	To Be Determined

Bids must be delivered in a sealed envelope/package and delivered to:

City of Port Orange City Clerk's Office
Attn: Chip Kent, Purchasing Agent
Purchasing Division
1000 City Center Circle
Port Orange, FL 32129

Sealed bids must be delivered no later than the date and time listed in the Timeline above. All times referenced are local time. Bids shall be sealed and Bidders shall clearly indicate on the outside of their bid the following:

a. Invitation to Bid (ITB) Number and Title
b. Date of Opening
c. Name of Bidder
d. Address of Bidder

Due to the timing of mail service, the City cautions Bidders to ensure actual delivery of bids to the City prior to the deadline set for receiving bids. Carrier and hand deliveries of bids will be accepted in the City Clerk's Office, Port Orange City Hall, 1000 City Center Circle, Port Orange, Florida 32129 until the date and time referenced in the Timeline above or as amended by addendum issued by the City. Bids received after the established deadline shall not be considered.

Bidders are cautioned that they are responsible for delivery to the specific location cited above. Therefore, if your bid, proposal, statement or quotation is delivered by an express mail carrier or by any other means, it is your responsibility to ensure delivery to the above address. The City will not be responsible for deliveries made to any place other than the specified address.

Offers by telephone or email shall not be accepted. Also, Bidders are instructed NOT to fax their bid package. **Faxed bids will be rejected as non-responsive regardless of where or when the fax is received.**

All bids will be opened publicly, and the names of all Bidders shall be read aloud. All conferences and meetings regarding this ITB are recorded electronically (audio only). The City of Port Orange reserves the right to reject any or all bids or parts of bids if it is in the best interest of the City.

PRE-BID CONFERENCE

There will be a non-mandatory pre-bid conference and site visit on the date and time referenced in the Timeline above at City Hall, Council Chambers (1st Floor), 1000 City Center Circle, Port Orange, Florida 32129. All attendees to the non-mandatory pre-bid conference and site visit MUST sign in. The representative of each Bidder shall be an authorized employee of the Bidder and must sign in accordingly. The site visit will immediately follow the meeting in Council Chambers.

QUESTIONS

All questions shall reference ''ITB #25-02 Construction of Forestry Building" in the subject line. All questions concerning this ITB shall be submitted in writing no later than the date and time referenced in the Timeline above to:

Chip Kent, Purchasing Agent
1000 City Center Circle
Port Orange, FL 32129
ckent@port-orange.org
purchdiv@port-orange.org

ADDENDA

The City will issue responses to inquiries and any other corrections or amendments it deems necessary in written addenda issued prior to the bid due date. Bidders should not rely on any representations, statements or explanations other than those made in this ITB or in any addendum to this ITB. Where there appears to be a conflict between the ITB and any addenda issued, the last addendum issued will prevail. The Bidder should verify prior to submitting a bid that all addenda have been received and reviewed. All addenda will be published on the City Purchasing web page at www.port-orange.org/bids.aspx and the DemandStar website at www.demandstar.com.

The City of Port Orange reserves the right to consider the omission of an Acknowledgment of Addendum as cause for rejection of the ITB submittal.

This provision exists solely for the convenience and administrative efficiency of the City of Port Orange. No Bidder or other third party gains any rights by virtue of this provision or the application thereof, nor shall any Bidder or third party have any standing to sue or cause of action arising therefrom.

CLARIFICATIONS

It is the Bidder's responsibility to become familiar with and fully informed regarding the terms, conditions and specifications of this ITB. Lack of understanding and/or misinterpretation of any portions of this ITB shall not be cause for withdrawal of your bid after opening or for subsequent protest of award.

MINIMUM QUALIFICATIONS

All Bidders must be certified and licensed Division 1 General Contractors. Bidders shall be licensed to do business in the State of Florida and must submit a Sunbiz report showing your company registered as "Active".

Bidders must provide a minimum of three (3) verifiable references from similar scopes of work as identified in this ITB on the provided "Professional References" form. Failure to provide verifiable references may cause the bidder to be deemed non-responsive. The City of Port Orange is not to be used as a reference.

NO LOBBYING

All Bidders are hereby placed on notice that the City of Port Orange Council, City Employees/Staff, nor Members of the Evaluation Committee (with the exception of the City of Port Orange Purchasing Division personnel designated to receive requests for interpretations or corrections) are not to be lobbied, directly or indirectly either individually or collectively, regarding this ITB. During the entire procurement process, all Bidders and their subcontractors, sub-consultants, or agents are hereby placed on notice that they are not to contact any persons listed above for such purposes as holding meetings of introduction, dinners, etc. if they intend to submit or have submitted bids for this project. Any Bidder contacting individuals mentioned herein in violation of this warning may automatically be disqualified from further consideration for this ITB.

SCHEDULE OF UNIT PRICING

Schedule of Unit Pricing is to be completed as directed and without modification and returned as part of the ITB submittal prior to the ITB deadline for submission. Failure to fill out the Schedule of Unit Pricing as directed and without modification may negatively affect the evaluation of your bid.

EXCEPTIONS TO SPECIFICATIONS

If taking exception to any portion of the ITB specifications, the Bidder must indicate those exceptions as stated on the *Bidder's Acknowledgement* (Form 7.2).

BID SUBMISSION AND WITHDRAWAL

Unless otherwise specified, Bidder shall use the forms supplied by the Purchasing Division. Bids, once opened, become the property of the City, cannot be withdrawn, and will not be returned to the Bidders. Upon opening, bids become subject to public disclosure in accordance with Chapter 119, Florida Statutes.

CORRECTION OF BIDS

Correction of inadvertently erroneous bids shall be permitted up to the time of ITB opening. Bidders shall not be allowed to modify their bids after the opening time and date.

WITHDRAWAL OF BIDS

NO bid shall be withdrawn for a period of one-hundred-twenty (120) days subsequent to the bid opening without the consent of the City of Port Orange. Negligence on the part of the Bidder in preparing their bid confers no right of withdrawal or modification after the bid has been opened at the appointed time and place by the City of Port Orange. Any such withdrawn bid shall not be resubmitted.

OPENING OF BIDS

Bids will be received until the date and time stated in this ITB and will be publicly opened and read at the place, time and date stated. The City bears no responsibility for the premature opening of a bid not properly addressed and identified.

LITIGATION HISTORY

The City will consider a Bidder's litigation history information in its review and determination of responsibility. All Bidders are required to disclose to the City all "material" cases filed, pending, or resolved during the last five (5) years prior to the solicitation response due date, whether such cases were brought by or against the Bidder, any parent or subsidiary of the Bidder, or any predecessor organization. If the Bidder is a joint venture, the information provided should encompass the joint venture (if it is not newly formed for purposes of responding to the solicitation) and each of the entities forming the joint venture. Although the review of a Bidder's litigation history is an issue of responsibility, the failure to provide litigation history as required in the Evaluation Criteria may result in a recommendation of non-responsive by the Purchasing Manager.

DEBARMENT HISTORY

The City will consider a Bidder's debarment history information in its review and determination of responsibility. All Bidders are required to disclose to the City all cases of debarment filed, pending, or resolved by the City or other public entity during the last five (5) years prior to the solicitation response due date, whether such actions were brought by or against the Bidder, any parent or subsidiary of the Bidder, or any predecessor organization. If the Bidder is a joint venture, the information provided should encompass the joint venture (if it is not newly formed for purposes of responding to the solicitation) and each of the entities forming the joint venture. Although the review of a Bidder's debarment history is an issue of responsibility, the failure to provide debarment history as required on the *Certification Regarding Debarment, Suspension and Other Responsibility Matters* (contained herein) may result in a recommendation of non-responsive by the Purchasing Manager.

REJECTION OF BIDS

The City reserves the right to reject any and/or all bids when such rejection is in the best interest of the City.

BIDS MAY BE REJECTED AND/OR BIDDER(S) DISQUALIFIED FOR THE FOLLOWING REASONS:

(a) Failure to update the information on file including address, product, service or business descriptions.
(b) Failure to perform according to contract provisions.
(c) Conviction in a court of law of any criminal offense in connection with the conducting of business.
(d) Evidence of a violation of any federal or state antitrust law based on the submission of bids or proposals, or the awarding of contracts.
(e) Evidence that the Bidder has attempted to give a City employee a gratuity of any kind for the purpose of influencing a recommendation or decision in connection with any part of the City's purchasing activity.
(f) Other reasons deemed appropriate by the City.

OWNERSHIP OF DOCUMENTS

All documents resulting from this solicitation will become the sole property of the City of Port Orange. The Bidder must meet all requirements for retaining public records and transfer, at no cost, to the City all public records in the possession of the Bidder upon termination of this Agreement and destroy any duplicate public records that are exempt or confidential and exempt from public records disclosure requirements. All records stored electronically must be provided to the City in a format that is compatible with the information technology systems of the City.

AMERICANS WITH DISABILITIES ACT (ADA)

If you need special services provided under the Americans with Disabilities Act, contact the ADA Coordinator in our Human Resources office at 386-506-5560 at least 48 hours before the scheduled event.

REQUIRED DOCUMENTS FOR AWARDED BIDDER

The awarded Bidder shall return all the required post-award documents within 10 days after the issuance of the Notice of Intent to Award in order to execute the contract.

SECTION 3 – SCOPE OF WORK

SCOPE OF WORK:

Construction of new 5,226 Sq. Ft. metal Forestry building and 6,631 Sq. Ft. of 6" stabilized access path on the City's wellfield property.

Additive Alternate #1: Install 3" of recycled asphalt pavement on top of the 6,631 Sq. Ft. of 6" stabilized base.

DRAWINGS, SPECIFICATIONS AND REQUIREMENTS:

Please refer to **Attachment 2 "Forestry Management Storage Barn_CD"** and **Attachment 3 "Forestry Management Storage Barn Project Manual"** posted as separate documents on the City's webpage www.port-orange.org/bids.aspx and DemandStar www.demandstar.com.

[Remainder of page left intentionally blank]

SECTION 4 – STANDARD PURCHASE DEFINITIONS

The City will use the following definitions in instructions to Bidders, terms and conditions, special provisions, technical specifications and any other solicitation documents.

1. **Addendum** is a formal written document, released prior to the public opening that modifies any aspect of a Solicitation. Plural: Addenda
2. **Alternate Bid** means multiple bids with substantive variations from the same Bidder in response to a Solicitation.
3. **Amendment** is a formal written agreement, signed by both parties, that modifies an existing contractual agreement.
4. **Appropriate, Appropriated, or Appropriation** means the adoption by the City Council of the City of a budget fora fiscal year that includes payments to be made under the Contract during the respective fiscal year.
5. **Best Value** means the highest overall value to the City based on factors that include, but are not limited to, price, quality, design, and workmanship.
6. **Bid** is a complete, properly signed response to an Invitation to Bid, which if accepted, would bind the Bidder to perform the resultant Contract.
7. **Bid Guaranty (Bid Bond)** guarantees that the Bidder (a) will not withdraw the bid within the period specified for acceptance, and (b) will execute a Contract and furnish required bonds and any necessary insurance within the time specified in the Solicitation, unless a longer time is allowed by the City. The guarantee will be returned to the Bidder upon execution of a Contract.
8. **Bidder or Proposer** is a person, firm, or entity that that submits a Response to a Solicitation. Any Bidder/Proposer may be represented by an agent after submitting evidence demonstrating the agent's authority. The agent cannot certify as to his own agency status.
9. **City** means the City of Port Orange.
10. **Competitive Negotiation** means a method for acquiring goods, services, and construction for public use in which discussions or negotiations may be conducted with responsible offerers who submit Responses through a Request for Proposals, Request for Statements of Qualifications, or Invitation to Negotiate.
11. **Competitive (Formal) Solicitation** is the process of requesting and receiving two or more sealed bids, proposals, statements of qualifications or replies submitted by responsive Bidders/Proposers in accordance with the terms of a competitive process, regardless of the method of procurement.
12. **Competitive Range** means the responsive submissions that meet the evaluation criteria and are considered to be reasonably susceptible of award.
13. **Construction** means the process of building, repairing, improving, and alterations, conversion or extension of building, parks, utilities, streets or other improvements or alterations to real property.
14. **Contract** is a written agreement or purchase order issued for the purchase of goods or services.
15. **Contractor** means the person, firm or entity selling goods or services to the City under a Contract.
16. **Deliverables** means the goods, products, materials, and/or services to be provided to the City by a Bidder.
17. **Due Date** means the date and time specified for receipt of Responses to a Solicitation.
18. **End User** is a person, program, agency, or other eligible user who uses a contract to purchase a commodity or contractual service.
19. **Evaluation Committee/Team** is a temporary group of City personnel who are responsible for the evaluation of proposals, statements of qualifications or replies as part of a Request for Proposals (RFP), Request for Submission of Qualifications (RFSQ), or Invitation to Negotiate (ITN), or competitive grant process.
20. **Evaluator** is a member of the evaluation committee/team.
21. **Goods** are supplies, materials, or equipment.
22. **Intent to Award** is a document, published on DemandStar, that informs the public and respondents of the City's decision to award a contract pursuant to a previously issued competitive solicitation.
23. **Invitation to Bid (ITB) or Bid** means a formal request to prospective Bidders requesting pricing for a specified Good or Service which has been advertised for bid in a newspaper.
24. **Invitation to Negotiate (ITN)** means a formal request to prospective proposers requesting proposed specifications and pricing of a product and/or service which has been advertised for replies in a newspaper.
25. **Issues** means points, matters, or concerns to be addressed during negotiations.
26. **Lead Negotiator** is the negotiator responsible for leading and facilitating the formal negotiation discussions and selecting other required negotiation team members. Is often the "driver of change" and seeks alternatives/options.

27. **Lowest Responsible Bid** means the responsive bid meeting all requirements of the specifications, terms, and conditions of the Invitation to Bid resulting in the lowest cost to the City in a total cost concept or based solely on price, taking into consideration the financial and practical ability of the Bidder to perform the Contract, past performance of the Bidder, and compliance with all City ordinances concerning the purchasing process.
28. **Lowest Responsible Bidder** means the Bidder submitting lowest responsible bid.
29. **Negotiation Team** is a temporary group of City personnel who are responsible for negotiations as part of an Invitation to Negotiate (ITN).
30. **Negotiator** is a member of the negotiation team.
31. **Non-Professional Services** are services performed that are not of a professional nature such as lawn care, security, janitorial, etc.
32. **Offer** means a complete signed Response submitted to the City in response to a Solicitation including, but not limited to, a bid submitted in response to an Invitation to Bid, a Proposal submitted in response to a Request for Proposal, a Quote submitted in response to a Request for Quotation, a Statement of Qualifications and interest submitted in response to a Request for Statements of Qualifications, or a Reply submitted in response to an Invitation to Negotiate.
33. **DemandStar** is the official online repository for all City competitive solicitations.
34. **Outlier** is a bid, offer, or proposal which is determined by the Purchasing Director or Manager to be significantly dissimilar to or inconsistent with, competing bids or offers.
35. **Pre-Bid/Proposal/Statement/Reply Conference** means a meeting conducted by the Purchasing Office, held in order to allow Bidders/Proposers to ask questions about the proposed Contract and particularly the Contract specifications with the City department requesting the goods/services.
36. **Price Analysis** is an evaluation of the total cost of a contract in order to determine if the price is reasonable.
37. **Procurement (Process)** is a term used in the governmental sector for the combined functions of acquiring (purchasing) needed goods and/or services, receiving and inspection, inventory management, contract administration, and disposal/surplus.
38. **Professional Services** means those services within the scope of the practice of architecture, professional engineering, landscape architecture, or registered surveying and mapping, as defined by the laws of the state, or those performed by any architect, professional engineer, landscape architect, or registered surveyor and mapper in connection with his or her professional employ mentor practice.
39. **Protest** is a formalized process by which respondents have an opportunity to challenge a procurement practice or contract award.
40. **Proposal** is a complete, properly signed Response to a Request for Proposal, based on performance that is offered rather than on that of price alone, which if accepted, would bind the Proposer to perform the resultant Contract.
41. **Purchase Order** is an order placed by the Purchasing Division for the purchase of Goods or Services written on the City's standard Purchase Order form and which, when accepted by the Bidder, becomes a contract. The Purchase Order is the Bidder's authority to deliver and invoice the City for Goods or Services specified, and the City's commitment to accept the Goods or Services for an agreed upon price.
42. **Request for Proposal (RFP)** means a formal request to prospective proposers requesting qualifications of the proposer and pricing for a specified Good or Service which has been advertised for Proposal in a newspaper.
43. **Request for Statement of Qualifications (RFSQ)** means a formal request to prospective proposers requesting statements of qualifications pursuant to Florida Statute 287.055 "Consultant's Competitive Negotiation Act" which has been advertised for Statement in a newspaper.
44. **Respondent** means an entity that has (or will, i.e. "prospective respondents") submitted a response to a competitive solicitation conducted to create a contractual relationship for the provision of commodities or services.
45. **Response/Submission** means all materials submitted to the City by a respondent as part of a solicitation. A response may be called a bid, proposal, statement of qualifications, or a reply, depending on the type of competitive solicitation being issued.
46. **Responsible (Bidder)** is a Bidder who has the capability in all respects to fully perform the contract requirements and the integrity and reliability that will assure good faith performance.
47. **Responsive (Bidder)** is a Bidder that has submitted a bid, proposal, statement of qualifications, or reply that conforms in all material respects to the solicitation.
48. **Scope** means the extent of the area or subject matter that something deals with or to which it is relevant.

49. **Scope of Work** means a description of the work activities, deliverables, and/or timeline that a Bidder must execute in terms of delivering specific commodities or in performance of contractual services.
50. **Services** include all work or labor performed for the City on an independent contractor basis other than construction.
51. **Solicitation** means a formal request, as applicable, for prospective Bidders/Proposers to submit responses to an Invitation to Bid, Request for Proposal, Request for Qualifications, Invitation to Negotiate, or a Request for Quotation.
52. **Solicitation Document** means a document, or collection of documents, either paper or electronic, that contains all information required to conduct a competitive procurement project according to § 287.057, Florida Statutes.
53. **Stakeholder** means an individual, who is not likely to become a supplier, who has an interest in the commodities/contractual services needed.
54. **Subcontractor** means a person, firm or entity providing goods or services to a Bidder/Proposer to be used in the performance of the Bidder/Proposer's obligations under the Contract.
55. **Subject Matter Expert** means a person who has working or expert knowledge about a particular topic or field.
56. **Unbalanced Bid** means a bid that is based on prices which are significantly less than cost for some bid items and significantly more than cost for others.

SECTION 5 – GENERAL TERMS AND CONDITIONS

These instructions are standard for all contracts for commodities or services issued through the City of Port Orange Purchasing Division. General Requirements apply to all advertised Solicitations; however, **these may be superseded, in whole or in part, by the SPECIAL PROVISIONS/INSTRUCTIONS OR OTHER DATA CONTAINED HEREIN.**

1. **ACCEPTANCE BY CITY**

   The City shall have a reasonable time (but not less than 30 days) after receipt to inspect the goods and services tendered by the Bidder. The City at its option may reject all or any portion of such goods or services which do not, in City's sole discretion, comply in every respect with all terms and conditions of the contract. The City may elect to reject the entire goods and services tendered even if only a portion thereof is nonconforming. If the City elects to accept nonconforming goods and services, the City, in addition to its other remedies, shall be entitled to deduct a reasonable amount from the price thereof to compensate the City for the nonconformity. Any acceptance by the City, even if non-conditional, shall not be deemed a waiver or settlement of any defect in such goods and services. The material delivered as a result of this solicitation shall remain the property of the seller until a physical inspection and actual usage of the item(s) is made and thereafter deemed acceptable to the satisfaction of the City, in compliance with the terms and specifications contained herein. In the event that the item(s) supplied to the City is/are found to be defective, or does/do not conform to specifications, the City reserves the right to cancel the order upon written notice to the seller and return the item(s) to the seller at the seller's expense.

2. **ADDENDA**

   When specifications are revised, the City of Port Orange Purchasing Division will issue an addendum addressing the nature of the change. Bidders should acknowledge all addenda by completing Form 7.3 *Addendum and Change Order Procedure Acknowledgement* and include it in the returned response package. Failure to acknowledge the correct number of addenda issued may result in rejection of the response. It is the responsibility of the Bidder to ensure all addenda have been received and reviewed prior to submitting a bid. All addenda shall be posted by the City on DemandStar at www.demandstar.com and the City of Port Orange Purchasing web page at https://www.port-orange.org/bids.aspx. The City shall issue responses to inquiries and any other corrections or amendments it deems necessary in written addenda issued prior to the solicitation response due date. Bidders should not rely on any representations, statements or explanations other than those made in this solicitation or in any addendum to the solicitation. Where there appears to be a conflict between the solicitation and any addenda issued, the last addendum issued shall prevail.

3. **ADDITIONAL GOODS**

   Products, materials and goods not specifically identified in this bid request may be added to any resultant contract upon mutual consent of the contracting parties. The City reserves the right to add or delete products or materials of similar nature, within the family of products of "ITB Item(s)" and their commodity codes, to those items requested in this bid.

4. **ANTI-COLLUSION STATEMENT**

By submitting a response to a formal solicitation, the Bidder affirms that this response is without previous understanding, agreement, or connection with any person, business, or corporation submitting a response for the same materials, supplies, or equipment, and that the response is in all respects fair, and without collusion or fraud. Additionally, Bidder agrees to abide by all conditions of this solicitation and certifies that he/she is authorized to sign the response for the bidding company/firm. In submitting a response to the City of Port Orange, the Bidder offers and agrees that if the response is accepted, the Bidder shall convey, sell, assign or transfer to the City of Port Orange all rights, title and interest in and to all causes of action it may now or hereafter acquire under the Anti-trust laws of the United States and the State of Florida for price fixing relating to the particular commodities or services purchased or acquired by the City of Port Orange. At the City's discretion, such assignment shall be made and become effective at the time the City tenders final payment to the Bidder.

5. **APPLICABLE LAWS**

In connection with the furnishing of supplies or performance of work under the contract, the Bidder agrees to comply with the Fair Labor Standards Act, Equal Opportunity Employment Act, and all other applicable federal and state laws, regulations and executive orders to the extent that the same may be applicable.

6. **ASSIGNMENT**

The successful Bidder shall not sell, assign, transfer or convey this contract in whole or in part, without the prior written consent of the City of Port Orange. Any such assignment or transfer shall not release the Bidder from all contractual obligations.

7. **AUTHORITY TO CONDUCT BUSINESS IN FLORIDA**

A Florida corporation or partnership is required to provide evidence with its response that it is authorized to transact business in Florida and is in good standing with the Florida Department of State. If not with its response, such evidence must be submitted to the City no later than five (5) business days from request of the Purchasing Manager.

A foreign (out-of-state) corporation or partnership is required to provide evidence with its response that it is authorized to transact business in Florida and is in good standing with the Florida Department of State. If not with its response, such evidence must be submitted to the City no later than five (5) business days from request of the Purchasing Manager.

A joint venture is required to provide evidence with its response that it, or at least one of the joint venture partners, is authorized to transact business in Florida and is in good standing with the Florida Department of State. If not with its response, such evidence must be submitted to the City no later than five (5) business days from request of the Purchasing Manager. However, the joint venture is required to provide evidence prior to contract execution that the joint venture is authorized to transact business in Florida and provide the City with a copy of the joint venture Agreement. A joint venture is also required to provide with its response a Statement of Authority indicating that the individual submitting the joint venture's proposal has the legal authority to bind the joint venture. If not with its response, such evidence must be submitted to the City no later than five (5) business days from the request of the Purchasing Manager.

8. **AWARDS**

Recommendation for award will be considered by the City of Port Orange City Council at the earliest possible regular meeting subsequent to the evaluation process. This ITB is issued in accordance with and shall be governed by the provisions of the City's Purchasing Manual. The City of Port Orange City Council reserves the right to make award(s) by individual sections, groups, all or none, or a combination thereof, with one or more Bidders; to reject any and all bids, or to waive any informality or technicality in bids received as deemed to be in the best interest of the City. The City does not award publicly funded contracts to those who knowingly employ unauthorized alien workers in violation of section 274A(e) of the Immigration and Naturalization Act, 8 United States Code s1324a(e). Such employment deprives legal workers of job opportunities. Violation of section 274A(e) shall be grounds for unilateral cancellation of the contract, bid or quote for purchase of services and goods by the City of Port Orange.

9. **AWARD AND EXECUTION OF CONTRACT**

When a bid received has been determined to be satisfactory, a contract will be awarded, or Purchase Order issued to the lowest responsive and responsible Bidder within the time designated in the contract documents.

The Bidder(s) to whom the award is made shall execute the contract(s) and return it, together with the properly executed bonds and insurance certificates to the City within the time specified.

10. **BID RETURNS**

Bidders shall return all completed responses to the City of Port Orange at the address set forth in Section 2 of this document on the date and at the time specified. Late submissions will not be accepted and shall be returned to Bidders unopened.

11. **BID PROTEST**

Any person who is adversely affected by the City's decision or intended decision shall file with the City Purchasing Manager a notice of protest in writing within 72 hours after the posting of the notice of decision or intended decision. With respect to a protest of the terms, conditions, and specifications contained in a solicitation, including any provisions governing the methods for ranking bids, proposals, statements, or replies, awarding contracts, reserving rights of further negotiation, or modifying or amending any contract, the notice of protest shall be filed in writing within 72 hours after the posting of the solicitation. Saturdays, Sundays, and state holidays shall be excluded in the computation of the 72-hour time established herein. The formal written protest shall be filed with the Purchasing Manager in writing within ten (10) days after the date the notice of protest is filed. The formal written protest shall state with particularity the facts and law upon which the protest is based. Failure to file a notice of protest or failure to file a formal written protest shall constitute a waiver of proceedings. Upon receipt of the formal written protest that has been timely filed, the City shall stop the solicitation or contract award process until the subject of the protest is resolved by final City action. However, the City may continue the solicitation or award process, provided the City Manager sets forth in writing particular facts and circumstances which require the continuance of the solicitation or contract award process without delay in order to avoid an immediate and serious danger to the public health, safety, or welfare. The City shall provide an opportunity to resolve the protest by mutual agreement between the parties. The policy this City has established is as follows:

a. As soon as possible after receipt, the Purchasing Manager shall provide written bid protest to City Manager, City Attorney, Department Head involved, and Supervisor directly involved in the acquisition.
b. Purchasing Manager shall schedule within seven (7) business days, excluding weekends and holidays, a meeting with the above-mentioned individuals or designee and protestor. The intent of the meeting is to provide a review and/or solution prior to going before Council. After reviewing all relevant information, the City Manager shall render a decision.
c. If the protestor disagrees, he/she may appeal to the City Council at a formal council meeting. After reviewing the evidence, the City Council will issue their decision. The City Council's decision is final; however, the protestor can appeal the decision to the Circuit Court in Volusia County, Florida within thirty (30) days of the City Council's final decision. Decisions at all levels shall be in writing to the protester.

12. **BID TABULATION**

Bidders who wish to receive a copy of the bid tabulation may obtain it via DemandStar at www.demandstar.com or on the City Purchasing web page at www.port-orange.org/bids.aspx.

13. **BIDDER'S PRODUCT OR SERVICES**

The Bidder's product (if applicable) delivered to the City shall be free of all liens, claims or encumbrances, and the Bidder warrants that it has a clear title to the product being delivered.

a. If the Bidder is contracted to provide services, such services shall be fully satisfactory to the City as determined by the City.
b. The Bidder shall provide the City with any data, reports or other information as required and requested by the City to enable it to utilize the product or service furnished by the Bidder.
c. In furnishing the service or product to the City, the Bidder shall comply with all federal, state, county laws, and city rules, regulations and codes and their successors or amendments. Violation of such laws, rules, regulations and codes may be grounds for delaying or reducing the amount due, or in rescinding the contract, proposal or quote.

14. **BONDS**

If this solicitation requires submission of bid guarantee and payment and performance bonds, there will be a separate section explaining those requirements. When the Purchasing Manager deems it necessary, bid bonds/deposits shall be prescribed and are advertised in the public notices inviting bids. Responses submitted

without the required bid bond or certified check shall be deemed non-responsive. Normally, if a bid bond/deposit is requested, it is in the amount of five percent (5%) of the bid amount.

Depending on the amount and/or nature of the work to be performed, a Payment and Performance Bond may be requested and shall be in an amount equal to one hundred percent (100%) of the total contract amount which will be recorded by the City, at the awarded Bidder's sole cost and expense, with the Clerk of the Circuit Court, Volusia County, Florida. After recording, the City will furnish to the awarded Bidder the recording information for the bond to evidence that the Bidder has met the requirements of Florida law. The City will bill the cost of recording to the awarded Bidder. Unsuccessful respondents are entitled to the return of their bid bond. A successful respondent shall forfeit any surety required by the Purchasing Manager upon failure of the respondent to enter into a contract within the time specified after the award of bid.

15. **CERTIFICATE OF INSURANCE**

Upon issuance of a notice of intent to award, the selected Bidder will be required to submit a Certificate of Insurance showing proof of adequate coverage for professional general liability, errors and omissions and workers' compensation as identified under the insurance requirements of this solicitation and listing the City of Port Orange as Additional Insured prior to execution of the contract.

16. **CHANGE ORDERS**

No oral statement of any person shall modify or otherwise change, or affect the terms, conditions or specifications stated in the resulting contract. All change order requests shall be made in writing by the supplier/contractor for review by the Contract Administrator for the City of Port Orange. No work shall be performed as set forth in the change order until the awarded Bidder receives an executed Purchase Order for the requested change.

17. **CHANGE ORDER REQUEST NOTIFICATION**

The awarded Bidder is responsible for giving the City of Port Orange, prior to the contract expiration date, at least forty-five (45) calendar days of advance notice for any anticipated changes in price greater than $25,000, and any changes in time and/or scope of the awarded contract. The Bidder shall not continue to provide services past the contract expiration date unless approved by a written Change Order Notice from the City.

18. **CLEAN UP**

Upon completion of the delivery of materials, the Bidder shall restore any/all public and private property which may have been damaged during delivery. Restoration is meant to include removal of any spillage or restoring damage to the edge of pavement, sidewalks, driveways, landscaped areas, etc. Bidder shall make repairs consistent with or better than what existed prior to delivery. This shall be understood to include the use of sod or seed and mulch to replace (if necessary) existing grass that has been damaged. If sod is used it shall match the sod present on the effected property. Bidder shall make all repairs and restorations at his/her expense.

19. **CONDUCT OF BIDDERS**

All Bidders or individuals acting on behalf of a Bidder are hereby prohibited from lobbying or otherwise attempting to persuade or influence any member of the Evaluation Committee, City Council members, or City staff at any time during the course of the solicitation process. The solicitation process shall end upon issuance of the written staff recommendation (Notice of Intent to Award) for selection of a Bidder. All Bidders or individuals acting on behalf of a Bidder are further prohibited from contacting or otherwise attempting to communicate with any member of the staff, Evaluation Committee or City Council members regarding the pending solicitation or its outcome until after the issuance of the written recommendation of the most qualified Bidder. Until such recommendation is issued in writing, any questions regarding the pending solicitation shall be submitted to the Purchasing Division. Failure to comply with this procedure shall result in rejection/disqualification of said submittal without exception. Contact with staff, City Council members or the Evaluation Committee during a public meeting shall not be considered a violation of this requirement.

20. **CONE OF SILENCE**

The Cone of Silence is designed to protect the integrity of the procurement process by shielding it from undue influences prior to the execution of the award. The Cone of Silence is defined as the period beginning with the issuance of the solicitation document and continues through the execution of the award document. During this time Bidders, service providers and the like are prohibited from all communications regarding the solicitation with City staff, City consultants, City legal counsel, City Agents, or elected officials. Any Bidder who initiates any discussions or attempts to influence a member or members of the aforementioned shall be disqualified from continued participation in the procurement process with regard to that particular solicitation.

Exceptions to the Cone of Silence:

- Written communication directed to the Procurement Officer;
- All communications occurring at Pre-Proposal Conferences;
- Oral presentations before publicly noticed committee meetings;
- Procurement of goods and services for Emergency situations; and
- Contractors already on contract with the City to perform services for the City are allowed discussions necessary for the completion of an existing contract.

21. **CONFLICT OF INTEREST**

For purposes of determining any possible conflict of interest, all Bidders must disclose if any City of Port Orange employee is also an owner, corporate officer, or employee of Bidder's business. No official or employee of the City who exercises any functions or responsibilities in the review or approval of the undertaking or carrying out of the Scope of Work covered by the contract shall voluntarily acquire any personal interest, directly or indirectly, in the contract or proposed contract.

22. **CONFLICT OF INSTRUCTIONS**

If a conflict exists between the General Terms and Conditions and instructions contained herein, and the Special Terms and Conditions and instructions contained herein, the Special Terms and Conditions shall govern.

23. **CONTRACT OBLIGATION**

Except as otherwise stated herein, the City of Port Orange City Council shall approve the contract if greater than $25,000.00 annually. The Mayor or other person authorized by the Mayor must sign the contract before it becomes binding on the City of Port Orange or the Bidder. Department heads are NOT authorized to sign contracts for the City of Port Orange. Binding agreements shall remain in effect until all products and/or services covered by this purchase have been satisfactorily delivered and accepted.

24. **CONTRACT RENEWALS**

Renewals may be made ONLY by written agreement between the City of Port Orange and the Bidder. Any price escalations are limited to those stated by the Bidder on the original response.

25. **COPYRIGHT AND PATENT RIGHTS**

Bidder warrants that there has been no violation of copyrights or patent rights in manufacturing, producing and/or selling the item(s) ordered or shipped as a result of this response, and successful Bidder agrees to hold the City harmless from any and all liability, loss or expense by any such violation.

26. **COST INCURRED BY BIDDER**

All expenses, including costs for required bonds, involved with the preparation and submission of Responses to the City, or any work performed in connection therewith shall be borne by the Bidder. No payment shall be made for any response received, nor for any other effort required of or made by the Bidder prior to commencement of work as defined by the contract approved by the City Council.

27. **DAMAGE**

Any damage to driveways, irrigation systems, sidewalks, pavement, or landscaping will be evaluated by the City's representative and the Bidder. If the Bidder is found to be at fault, all repairs, restitution, or reimbursements to the City must be completed within one week of discovery.

28. **DEBARMENT HISTORY**

The City will consider a Bidder's debarment history information in its review and determination of responsibility. All Bidders are required to disclose to the City all cases of debarment filed, pending, or resolved by the City or other public entity during the last five (5) years prior to the solicitation response due date, whether such actions were brought by or against the Bidder, any parent or subsidiary of the Bidder, or any predecessor organization. If the Bidder is a joint venture, the information provided should encompass the joint venture (if it is not newly formed for purposes of responding to the solicitation) and each of the entities forming the joint venture. Although the review of a Bidder's debarment history is an issue of responsibility, the failure to provide debarment history as required on the *Certification Regarding Debarment, Suspension and Other Responsibility Matters* (contained herein) may result in a recommendation of non-responsive by the Purchasing Manager.

29. **DEFAULT PROVISIONS**

In the event of default by the Bidder, the City reserves the right to procure the item(s) bid from other sources and hold the Bidder responsible for excess costs incurred as a result. If a Bidder defaults on a City contract, the City Council may elect to refrain from doing business with the Bidder for a period of 36 months from the date of default.

30. **DELIVERY OF GOODS/SERVICES**

All materials are to be delivered F.O.B.; City of Port Orange designated facility. Delivery dates pertaining to this invitation must be clearly stated in the bid form where required and include weekends and holidays. Failure to comply with this requirement may be a cause for disqualification of bid. Unless otherwise specified, delivery at the earliest date is required. The Bidder shall clearly state in the response the time required for delivery upon receipt of contract or purchase order. Proposed delivery time must be specific and such phrases "as required," "as soon as possible" or "prompt" may result in disqualification of the bid. Delivery time will be a factor for any orders placed as a result of this response. The City reserves the right to cancel such order(s) or any part thereof, without obligation, if delivery is not made within the time(s) specified herein and hold the Bidder in default. Upon approval of a contract, the Bidder is obligated to deliver the goods to the destination specified in the solicitation or the purchase order and bears the risk of loss until delivery. If this solicitation or purchase order does not contain delivery instructions, Bidder shall request instructions in writing from the Purchasing Manager. If the delivery instructions contained in the solicitation allocate delivery costs and risks in a manner contrary to this section, the provisions of this competitive solicitation shall prevail. When delivery is not met as provided for in the contract, the Purchasing Division reserves the right to make the purchase on the open market, with any cost in excess of the contract price paid by the Bidder, in addition to any other damages, direct or consequential, incurred by the City as a result thereof. In addition, failure of the Bidder to meet the contract delivery dates will be cause for removal of the Bidder from the City's list of eligible Bidders/Proposers as determined by the Purchasing Division.

31. **DETERMINATION OF LOWEST AND BEST RESPONSIBLE BIDDER**

In determining the lowest and best responsible Bidder, in addition to price, there will be considered the following:

a. The ability, capacity and skill of the Bidder to perform the contract.
b. Whether the Bidder can perform the contract within the time specified, without delay or interference.
c. The character, integrity, reputation, judgment, experience, and efficiency of the Bidder.
d. The quality of performance of previous contracts.
e. The previous and existing compliance by the Bidder with laws and ordinances relating to the contract.
f. The sufficiency of the financial resources and ability of the Bidder to perform the contract or provide the service.
g. The quality, availability and adaptability of the supplies or contractual services to the particular use required.
h. The ability of the Bidder to provide further maintenance and service for the use of the subject of the contract.
i. The number and scope of conditions attached to the bid.
j. Such other factors as appear to the city council to be pertinent to the bid or the contract under all of the circumstances involved.

32. **DISCLOSURE OF CONFLICTS**

The award is subject to the provisions of Chapter 112.313, Florida Statutes. All Bidders must disclose with their response the name of any officer, director, or agent who is also an employee of the City. Further, all Bidders must disclose the name of any employee who owns, directly or indirectly, an interest in the Bidder's firm or any of its branches. The Bidder shall not compensate, in any manner, directly or indirectly, any officer, agent, or employee of the City for any act or service that he/she may do, or perform for, or on behalf of any officer, agent or employee of the Bidder. No officer, agent, or employee of the City shall have any interest, directly or indirectly, in any contract or purchase made, or authorized to be made by anyone for, or on behalf of the City. The Bidder shall have no interest and shall not acquire any interest that shall conflict in any manner or degree with the performance of the services required under the solicitation.

33. **DISQUALIFICATION OF BIDDER**

The Purchasing Manager shall maintain a current listing of qualified Bidders. The Purchasing Manager may, from time to time, remove any Bidder's name from the list of qualified Bidders. Normally the removal of a Bidder from the Bidder list is done after non-response from that Bidder for three (3) consecutive solicitations. Such action may also arise out of breach of contract, default, or irregular business practice, based on the Finance Director and City Attorney's recommendation. Any or all responses may be rejected if the City believes that collusion exists among the Bidders. Responses in which the prices are obviously unbalanced may be rejected. If

multiple responses are submitted by a Bidder and after the responses are opened one of the responses is withdrawn, the result will be that all of the responses submitted by that Bidder will be withdrawn; however, nothing herein prohibits a Bidder from submitting multiple responses for different products or services.

34. **EVALUATION**

Evaluation shall be used as a determinant as to which response items or services are the most efficient and/or most economical for the City. It shall be based on all factors which have a bearing on price and performance of the items in the user environment. All responses are subject to tabulation by the City of Port Orange Purchasing Division and recommendation to the governing body. Compliance with all solicitation requirements, delivery and needs of the using department are considerations in evaluating responses. Pricing is NOT the only criteria for making a recommendation. The City of Port Orange Purchasing Division reserves the right to contact any Bidder/Proposer, at any time, to clarify, verify or request information with regard to any response.

35. **EXCEPTIONS TO SPECIFICATIONS**

For purposes of evaluation, the Bidder must indicate any exception to the specifications, terms, and/or conditions, no matter how minor. This includes any agreement or contract forms supplied by the Bidder that are required to be signed by the City. If exceptions are not stated by the Bidder, in his/her bid, it will be understood that the item(s)/services fully comply with the specifications, terms and/or conditions stated by the City. Exceptions are to be listed by the Bidder on Form 7.2 *Bidder's Acknowledgement* included with the bid. The City will not determine exceptions based on a review of any attached sales or manufacturer's literature.

36. **E-VERIFY**

Bidders shall utilize the U.S. Department of Homeland Security's E-Verify system to verify the employment eligibility of all new employees hired by the Bidder during the term of contract and shall expressly require any subcontractor performing services pursuant to the contract to likewise utilize the U.S. Department of Homeland Security's E-Verify system to verify the employment eligibility of all new employees hired by the subcontractor during the term of contract. Bidders shall complete Form 7.12 *E-Verify Affidavit* and include it in the returned bid package. Failure to include the affidavit may result in rejection of the bid.

37. **FACILITIES**

The City reserves the right to inspect the Bidder's facilities at any time.

38. **FAILURE TO RESPOND**

If the Bidder elects not to bid, the City requests that Bidder return the enclosed Form 7.15 *No Submittal Response* by the bid due date and state the reason(s) for not bidding. Failure to respond, either by submitting a bid, or by submitting Form 7.15 *No Submittal Response*, three (3) times, shall result in the Bidder's name being removed from the City's mailing list.

39. **FINANCIAL STABILITY**

Bidders shall be prepared to supply a financial statement upon request, preferably a certified audit of the last available fiscal year. A third party prepared financial statement **and** the latest Dunn & Bradstreet report will be accepted in lieu thereof.

40. **FORCE MAJEURE**

Neither party shall be liable for any delay in performance or failure to perform any obligation hereunder if, and to the extent that, such failure or delay is caused by an event of force majeure. Force majeure shall mean any act, event or condition that is beyond the party's reasonable control, that materially and adversely affects the party's ability to perform its obligations hereunder, and that is not the result of the party's willful neglect, error, omission or failure to exercise reasonable due diligence.

41. **FOREIGN COUNTRIES OF CONCERN**

A governmental entity may not knowingly enter into a contract with an entity which would give access to an individual's personal identifying information if: a) the entity is owned by the government of a foreign country of concern to include the People's Republic of China, the Russian Federation, the Islamic Republic of Iran, the Democratic People's Republic of Korea, the Republic of Cuba, the Venezuelan regime of Nicolas Maduro, or the Syrian Arab Republic, including any agency of or any other entity of significant control of such foreign country of concern; b) the government of a foreign country of concern has a controlling interest in the entity; or c) the entity is organized under the laws of or has its principal place of business in a foreign country of concern.

42. **GOVERNING FORMS**

In the event of any conflict between the terms and provisions of these requirements and the specifications, the specifications shall govern. In the event of any conflict of interpretation of any part of this overall document, the City's interpretation shall govern.

43. **GOVERNING LAW**

Bidders shall comply with all applicable federal, state and local laws and regulations. All responses are solicited and shall be made pursuant to the Code of Ordinances, City of Port Orange, Chapter 2, Article VI, Division 2, Section 2-263, and all responses will be evaluated in accordance with the provisions thereof. Code of Ordinances, City of Port Orange is on file in the Office of the City Clerk, City Hall, 1000 City Center Circle, Port Orange, Florida and at www.municode.com. The City of Port Orange is also governed by the Consultants' Competitive Negotiation Act, Section 287.055, Florida Statutes, as the method of selecting architects, engineers and land surveyors. The City has utilized the procedures in the Act for Professional counselors, environmentalists, planners, general contractors, computer systems, designers, telecommunications consultants, maintenance technicians, financial services and other professional services. Every acquisition equal to or greater than $35,000.00 must have a signed, notarized *Sworn Statement of Public Entity Crimes* (Form 7.5) contained herein to comply with Section 287.133(3)(a), Florida Statutes. Also required is the *Drug- Free Preference Statement* (Form 7.4) also contained herein to comply with Section 287.087, Florida Statutes.

44. **GRANT FUNDING**

Any contract entered into by the City that is to be paid from grant funds shall be limited to payment from the grant funding and the Bidder understands that the City has not set aside any City funds for the payment of obligations under a grant contract. If grant funding should become unavailable at any time for the continuation of services paid for by the grant, and further funding cannot be obtained for the contract, then the sole recourse of the provider shall be to terminate any further services under the contract and the contract shall be null and void.

45. **HIPAA COMPLIANCE**

The Bidder agrees to comply with the Standards for Privacy of Individually Identifiable Health Information of the Health Insurance Portability and Accountability Act of 1996, PL 104-191, 45 CFR Parts 160-164, as amended, referred to as "HIPAA," to the extent that the Bidder uses, discloses or has access to protected health information as defined by HIPAA.

46. **IDENTICAL TIE BIDS**

If there are tie bids, meaning everything except the information relating to the submitting firm is the same, the following methods shall be used in the order below to break the tie:

- The Bidder that has a Business Tax Receipt (BTR) within Port Orange City limits (confirmed through Sunbiz).
- The commodity was manufactured in the State of Florida.
- Florida business as confirmed thru SunBiz.org.
- If one has or had a contract with the City and performance is or was satisfactory. If performance of a tie Bidder who has or had a contract with the City and performance is or was not satisfactory, the other tied Bidder is awarded.
- Drug free workplace policy in place.

47. **INDEMNIFICATION/HOLD HARMLESS**

(a) Bidder shall be liable for any loss of, or damage to, City property caused by the negligence, recklessness, or intended wrongful misconduct of Bidder, his/its agents, servants and employees and shall indemnify and save the City harmless against all actions, proceedings, claims, demands, costs, damages and expenses, including attorney's fees, by reason of any suit or action brought for any actual or alleged injury to or death of any person or damage to property other than City property, resulting from the performance of the contract by the Bidder, his/its agents, servants and employees. Bidder shall submit a full written report to the Finance Director within twenty-four (24) hours following the occurrence of such damage, loss or injury.

(b) To the fullest extent permitted by law, in addition to the express duty to indemnify the City when there is any causal connection between Bidder's work and any injury, loss, damage, death or property damage, Bidder expressly undertakes a duty to defend City as a separate duty, independent of and broader than the duty to indemnify. The duty to defend agreed to by Bidder hereby expressly include all costs of litigation, attorney's fees, settlement costs and reasonable expenses in connection with the litigation, whether or not

the claims made for loss, injury, damage or property damage are valid or groundless and regardless of whether the defense of City is maintained by the City or assumed by Bidder as long as the claims made could be causally connected to Bidder as reasonable determined by the City.

48. **INDEPENDENT CONTRACTOR**

It is expressly understood and agreed by both parties hereto that the City is contracting with the successful Bidder as an independent contractor. The parties hereto understand and agree that the City shall not be liable for any claims which may be asserted by any third party occurring in connection with the services to be performed by the successful Bidder under this contract and that the successful Bidder has no authority to bind the City. The Bidder represents itself to be an independent contractor offering such services to the public and shall not represent himself or his employees to be an employee of the City. Therefore, the Bidder shall assume all legal and financial responsibility for taxes, FICA, employee fringe benefits, worker's compensation, employee insurance, minimum wage requirements, overtime, etc., and agrees to indemnify, save, and hold the City, its officers, agents, and employees, harmless from and against, any and all loss; cost (including attorney's fees); and damage of any kind related to such matters. The Bidder shall further understand that the City cannot save and hold harmless and or indemnify the Bidder and/or the Bidder's employees against any liability incurred or arising as a result of any activity of the Bidder or any activity of the Bidder's employees performed in connection with the contract.

49. **INSPECTIONS AND TESTING**

City of Port Orange reserves the right to inspect any item(s) or service location for compliance with specifications and requirements and needs of the using department. If a Bidder cannot furnish a sample of a response item, where applicable, for review, or fails to satisfactorily show an ability to perform, the City can reject the response as inadequate and non-responsive.

50. **INSURANCE CANCELLATION**

No change or cancellation in insurance shall be made without thirty (30) days of written notice by the Bidder to the City. Insurance coverage required in these specifications shall be in force throughout the contract term. Should any awardee fail to maintain or to provide acceptable evidence of current insurance within five (5) days after receipt of written notice at any time during the contract term, the City shall have the right to consider the contract breached which shall justify the termination thereof.

51. **INSURANCE REQUIREMENTS**

Bidder shall maintain insurance, as required herein, during the life of this contract. Bidder shall provide to the City, a certificate of insurance endorsing the City of Port Orange as an additional named insured. All insurance coverages of the Bidder shall be primary and non- contributory. All insurance coverages of the Bidder shall not seek contribution from any other insurance or self- insurance available to the City. For workers' compensation coverage, the Bidder's insurance certificate shall include the insurer's waiver of subrogation in lieu of endorsing the City as an additional insured for workers' compensation.

IMPORTANT: The City does not accept Workers' Compensation Exemptions. Bidder may use leased employees if the Bidder ensures that all workers who access the jobsite are employees covered by the employee leasing company, and no non-employees are permitted to access the jobsite. Any Bidder using a leased employee shall complete the City's *Leased Employee Affidavit* contained herein. Policies for Workers' Compensation may be issued by companies authorized as a group self-insurer by F.S. 440.572. Policies other than Workers' Compensation shall be issued by insurers licensed and/or duly authorized under Florida Law to do business in the State of Florida and all insuring companies are required to have a minimum rating of "A-" in the "Best Key Rating Guide" published by A.M. Best & Company, Inc. Bidder shall not commence work under this contract until the City has received a certificate or certificates of insurance with endorsement evidencing the required insurance. Insurer shall provide the City written notice of cancellation, non-renewal or any other changes in coverage no later than thirty (30) days prior to the effective date of the change and shall provide notice to the City no later than 10 days after non-payment. The Certificates of Insurance and required insurance policies shall contain provisions that thirty (30) days of prior written notice shall be given to the City of any cancellation, intent not to renew, or reduction in the policies or coverages. Bidder shall require and ensure each of its subcontractors to maintain, until the completion of the subcontractor's work, insurance of the types and to the limits set forth herein. All insurance coverages shall be primary and non-contributory. All insurance coverages of the subcontractors shall not seek contribution from any other insurance or self-insurance available to the City. The Bidder is responsible for ensuring that its subcontractors maintain the required coverage. Failure of

the Bidder to ensure the subcontractors maintain the required coverage, shall not relieve the Bidder of any contractual responsibility, obligation or liability. The City reserves the right to increase the insurance coverage requirement as determined for higher risk contracts. The acceptance by the City of any Certificate of Insurance does not constitute approval or agreement by the City that the insurance requirements have been satisfied or that the insurance policy shown on the Certificate of Insurance is in compliance with and does not waive the insurance required by this. Should at any time the Bidder or subcontractors not maintain the insurance coverages required herein, the City may terminate the contract or at its sole discretion shall be authorized to purchase such coverages and charge the Bidder for such coverages purchased. The City shall be under no obligation to purchase such insurance, nor shall it be responsible for the coverages purchased or the insurance company or companies used. The decision of the City to purchase such insurance coverages shall in no way be construed to be a waiver of any of its rights under the contract.

[Remainder of page left intentionally blank]

Standard Insurance Requirements			
Required	**Insurance**	**Standards**	**Additional Requirements**
☒	Workers' Compensation The Contractor shall maintain coverage for its employees with statutory workers' compensation limits, and no less than the limits indicated in the Schedule of Limits for Employers' Liability. Said coverage shall include a waiver of subrogation in favor of the City. **The City will not accept elective exemptions.** Any Contractor using an employee leasing Company shall complete the Leased Employee Affidavit Exhibit Form.	Contract Amount — Limits Up to $10 million — Statutory/$500,000 $10 - $20 million — Statutory/$1,000,000 Contracts over $20 million to be determined by the City	• If contract requires work on or about navigable waters, Longshoreman's and Harbor Workers' coverage required. • If vessels involved, Jones Act coverage with limits of $500,000 required
☒	Comprehensive General Liability (including completed operations and contractual liability)	Limits: Combined Single Limit Bodily Injury and Property damage: $1,000,000 each occurrence $1,000,000 aggregate	When work is on or under Railroad rights of way or properties, the Contractor shall take out and maintain during the life of the contract, Railroad protective liability and property damage insurance in amounts as requested by the Railroad.
☒	Comprehensive Business, Automobile Liability to include all owned, hired and non-owned automobiles	Limits: Auto Liability Bodily Injury and Property Damage: $1,000,000 each occurrence $1,000,000 aggregate	
	Additional Insurance Requirements		
☐	Property Insurance Builders Risk Additional Coverage:	Limits: Buildings – completed value of contract "All Risk" coverage on latest ISO for or its equivalent. Permission grated to occupy. Owner named as insured AIMA	If agreement required handling or installation of Owner's equipment, coverage should be furnished on "All Risk" form, including transit and Owner shall be named.
☐	Installation Floater (IT)	Limits: Coverage – To Be Determined	
☐	Contractor Pollution Liability	Limits: Coverage - $1,000,000	
☐	Professional Liability/Errors and Omissions	Limits: Coverage - $1,000,000	
☐	Umbrella Policy	Limits: Coverage – To Be Determined	
☐	Payment and Performance Bond required	Limits: Coverage – equal to amount of contract	
	City Manager waives Payment and Performance Bond for work under $200,000 unless otherwise requested by the Department Head.		
	Unless otherwise required by law, City Manager waives insurance for FOB goods only purchases.		

52. **INVOICES AND PAYMENTS**

All invoices shall be sent to: City of Port Orange, Accounts Payable, P.O. Box 291759, Port Orange, Florida, 32129 or email to apbilling@port-orange.org. In accordance with Florida Statutes, Chapter 218, payment will be made within 45 days after receipt of merchandise and a proper invoice. The City will attempt to pay within fewer days if contractor offers a payment discount. The City cannot make advance payments, make deposits in advance of receipt of goods, or pay C.O.D. If the awarded firm would like to receive payment via ACH, this can be accommodated after the contract is fully executed.

53. **IRREVOCABILITY OF RESPONSES**

Each Bidder agrees that responses shall remain open until the contract effective date not to exceed 90 days after the award selection, shall not be subject to revocation or withdrawal, and shall be subject to the City Council's acceptance of a contract with the Bidder.

54. **LATE SUBMISSIONS, LATE MODIFICATIONS AND LATE WITHDRAWALS**

Responses received after the response due date and time are late and shall not be considered. Modifications received after the response due date are also late and shall not be considered. Letters of withdrawal received after the response due date are late and shall not be considered. Letters of withdraw received after contract award shall be deemed a breach of contract, subject to penalties as set forth in the contract and solicitation.

55. **LEGAL REQUIREMENTS**

Applicable provision of all federal, state, county and local laws, and all ordinances, rules, and regulations shall govern development, submittal and evaluation of all responses received in response hereto and shall govern any and all claims and disputes which may arise between person(s) submitting a response to a solicitation hereto and the City by and through its officers, employees and authorized representatives, or any other person, natural or otherwise; and lack of knowledge by any Bidder shall not constitute a cognizable defense against the legal effect thereof.

56. **LICENSES, PERMITS AND TAXES**

The Bidder shall comply with all rules, regulations, laws and permitting requirements of the City, Volusia County, the State of Florida, and the United States Government now in force or hereafter to be adopted. The Bidder shall abide by all ordinances and laws pertaining to his/her operations and shall secure, at his/her expense, all licenses and permits necessary for construction and operation.

57. **LITERATURE (if applicable):**

If no brand, model or make is specified, Bidders shall submit descriptive literature and technical data, fully detailing all features, designs, construction, appointments, finishes and the like not covered in the specifications, necessary to fully describe the equipment, material, and/or services Bidder proposes to furnish.

58. **LOCAL PREFERENCE**

The City uses Sunbiz to verify a supplier or contractor's business address. Sunbiz is a database on the Florida Department of State, Division of Corporations website and can be accessed using this link: https://dos.myflorida.com/sunbiz/. A local supplier or contractor is interpreted as a respondent to a solicitation, which as of the date of the solicitation opening, has a valid Business Tax Receipt (BTR) issued by the City of Port Orange to do business in the City of Port Orange which authorizes the supplier or contractor to provide the goods, services, or construction to be purchased and has a physical address located within the limits of Port Orange from which the supplier or contractor operates or performs business. A Post Office Box cannot be used to establish physical address. This local preference is only used as part of a tie breaker during a formal solicitation.

59. **MAINTENANCE**

If maintenance is required for equipment purchased as a result of this solicitation, it is preferred that such maintenance be available to the City of Port Orange by a manufacturer-authorized maintenance facility. Costs for this service shall be shown on the Schedule of Unit Pricing form for the solicitation. If the City of Port Orange opts to include maintenance, it shall be so stated in the purchase order and said cost will be included. Service will commence only upon expiration of applicable warranties and shall be priced accordingly.

60. **NAME BRANDS**

Specifications may reference name brands and model numbers. It is not the intent of the City of Port Orange to restrict these bids in such cases, but to establish a desired quality level of merchandise or to meet a pre-established standard due to like existing items. Bidders may offer items of equal stature and the burden of proof

of such stature rests with the Bidder, unless otherwise specified by the City. The City of Port Orange shall act as sole judge in determining equality and acceptability of products offered.

61. **NON-DISCRIMINATION**

There shall be no discrimination as to race, color, religion, gender, age, marital status, national origin, ancestry, and physical or mental disability in the operations conducted under this contract. Included as applicable activities by the contractor under this section are the solicitation for or purchase of goods or services, or the subcontracting of work in performance of this contract.

62. **NON-EXCLUSIVITY OF CONTRACT**

The selected Bidder understands and agrees that any resulting contractual relationship is non-exclusive, and the City of Port Orange reserves the right to seek similar or identical services elsewhere if deemed in the best interest of the City of Port Orange.

63. **NON-PERFORMANCE**

Failure to meet the expected quality of workmanship, schedule, or other criteria agreed upon, shall be considered a default. In case of default, the City may procure the required services from other sources and hold the contractor responsible for any excess costs occasioned thereby and may immediately cancel the contract.

64. **NOTICE TO CONTRACTOR**

The employment of unauthorized aliens by any contractor is considered a violation of Section 274A (e) of the Immigration and Nationality Act. If the contractor knowingly employs unauthorized aliens, such violation shall be cause for unilateral cancellation of the contract.

65. **OPTIONAL CONTRACT USAGE**

As provided in Section 287.042(16), Florida Statutes, State of Florida agencies may purchase from a contract resulting from this solicitation, provided the Department of Management Services, Division of Purchasing, has certified its use to be cost effective and in the best interest of the State. Contractor(s) may sell such commodities or services certified by the Division to State of Florida agencies at the contractor's option.

66. **PATENTS/COPYRIGHTS**

The successful Bidder agrees to indemnify and hold the City harmless from any claim involving patent infringement or copyrights on goods supplied.

67. **PRE-BID CONFERENCE**

The Purchasing Manager shall determine if a pre-bid conference is required and provide the date, time and location in the solicitation legal advertisement and solicitation specifications. The conference shall normally be held in the Council Chambers, located on the first floor of City Hall, 1000 City Center Circle, Port Orange, Florida. A site visit may be included and shall immediately follow. Only Bidders attending a mandatory pre-bid conference will be eligible to submit a response. The representative of each Bidder shall be an authorized employee of the Bidder and shall sign in accordingly.

68. **PREPARATION OF RESPONSES**

In preparing responses, the Schedule of Unit Pricing form, the Bid Bond form (when a Bid Bond is required as bid security), Certificate as to Corporate Principal, Public Entity Crimes Statement, Anti- Collusion Statement, and Drug Free Preference Statement must be properly executed in ink. The prescribed Schedule of Unit Prices shall be typewritten or written in ink, or electronically imputed in the blank spaces for each item, with the amounts extended if a unit price bid, and all amounts totaled. The sum of the total bid as calculated from the individual items, Schedule of Unit Prices, shall equal the Total Price. Except as provided below, bids containing substitutions or combinations of alternates will not be considered unless such substitutions or combinations are specifically authorized by the solicitation. The Bidder shall sign his/her name and give his/her business address in the spaces provided therefore. If the submittal is made as a partnership, it shall be signed by all partners; if made by a corporation, it shall be signed in the name of the corporation by one of the officers thereof and shall have affixed the seal of the corporation.

69. **POSTPONEMENT/CANCELLATION/WAIVER OF IRREGULARITIES**

The City may, at its sole and absolute discretion, reject any and all, or parts of responses; re- advertise the solicitation for new responses; postpone or cancel, at any time, the solicitation process; or waive any irregularities in the solicitation or in the responses received as a result of the solicitation, or to accept that response which best serves the interest of the City.

70. **PRICING**

Responses may not be withdrawn before the expiration of one-hundred-twenty (120) days. Prices shall be firm, with no escalator clauses unless specified by the City. Responses may be withdrawn after one-hundred-twenty (120) days only upon written notification to the City. Prices for all goods and/or services shall be firm for the duration of this contract and shall be stated on the Schedule of Unit Pricing form. Prices shall be all inclusive: no price changes, additions, or subsequent qualifications will be honored during the course of the contract. All prices must be written in ink or typewritten. Pricing on all transportation, freight, drayage and other charges are to be prepaid by the contractor and included in the bid prices. If there are any additional charges of any kind, other than those mentioned above, specified or unspecified, the Bidder shall indicate the items required and attendant costs or forfeit the right to payment for such items. Where unit pricing and extended pricing differ, unit pricing prevails. In the event of any discrepancy between the written amounts and the numerals, the written amounts shall govern and will be considered as the price bid. When submitting bids/proposals based on a lump sum basis, Bidders shall be required to submit a price for each line item listed on the Schedule of Unit Pricing in order to be considered for award.

71. **PRODUCTS/ESTIMATES**

Items included on the bid form represent the needs of various departments within the City. This is in no way to be construed as the entire or complete list of products to be purchased from the resulting contract. There is no anticipated dollar volume for this contract and estimated quantities provided on the Schedule of Unit Pricing are for bidding purposes only and are not guaranteed. Items shall be ordered on an as needed, when needed basis. Exact quantities or estimated quantities cannot be predetermined.

72. **PROPRIETARY INFORMATION**

Upon receipt by the City, responses to solicitations, become public records subject to the provisions Florida's state policy on public records, Section 119, Florida Statutes. If you believe that any portion of your response is exempt, you should clearly identify the specific documents for which confidentiality is claimed and provide specific legal authority of the asserted exemption. Any financial statement that an agency requires a prospective Bidder to submit in order to prequalify for bidding or for responding to a proposal for a road or any other public works project is exempt from Section 119.07, Florida Statutes, and Article I, 24(a), Florida Constitution.

73. **PROTECTION**

Precaution shall be exercised at all times for the protection of persons, (including employees) and property. All existing structures, utilities, services, roads, trees, shrubbery, etc. shall be protected against damage or interrupted service at all times by the contractor during the term of contract, and the contractor shall be held responsible for any damage to the property occurring by reason of his/her operation on the property.

74. **PUBLIC ENTITY CRIMES**

In accordance Section 287.133 (2)(a), Florida Statutes: A person or affiliate who has been placed on the convicted Bidder list following a conviction for a public entity crime may not submit a bid on a contract to provide any goods or services to a public entity, may not submit a bid on a contract with a public entity for the construction or repair of a public building or public work, may not submit bids on leases of real property to a public entity, may not be awarded or perform work as a contractor, supplier, subcontractor or consultant under a contract with any public entity, and may not transact business with any public entity in excess of the threshold amount provided Section 287.017, Florida Statutes, for CATEGORY TWO for a period of 36 Months from the date of being placed on the convicted Bidder list.

75. **PUBLIC RECORDS COMPLIANCE**

Contractor shall comply with public records laws as set forth in Section 119, Florida Statutes, and shall specifically:

a. Keep and maintain public records that ordinarily and necessarily would be required by the City in order to perform the service.
b. Provide the public with access to public records on the same terms and conditions that the City would provide the records and at a cost that does not exceed the cost provided in Section 119, Florida Statutes, or as otherwise provided by law.
c. Ensure that public records that are exempt or confidential and exempt from public records disclosure requirements are not disclosed except as authorized by law.
d. Meet all requirements for retaining public records and transfer to the City, at no cost, all public records in possession of the contractor upon termination of the contract and destroy any duplicate public records that

are exempt or confidential and exempt from public records disclosure requirements. All records stored electronically must be provided to the City in a format that is compatible with the information technology systems of the City.

IF THE VENDOR HAS QUESTIONS REGARDING THE APPLICATION OF CHAPTER 119, FLORIDA STATUTES, TO THE VENDOR'S DUTY TO PROVIDE PUBLIC RECORDS RELATING TO THIS CONTRACT, CONTACT THE CUSTODIAN OF PUBLIC RECORDS AT 386-506-5563, cityclerk@port-orange.org, CITY OF PORT ORANGE, 1000 CITY CENTER CIRCLE, PORT ORANGE, FLORIDA, 32129.

The failure of contractor to comply with a public records request shall constitute a material breach of the contract.

76. **PUBLIC RECORDS/PUBLIC MEETINGS EXEMPTION STATEMENT**

Section 119.071(1)(c), Florida Statutes: **Any financial statement that an agency requires a prospective Bidder to submit in order to prequalify for bidding or for responding to a proposal for a road or any other public works project is exempt from s. 119.07(1) and s. 24(a), Art. I of the State Constitution. On June 2, 2011, Governor Scott signed HB 7223 into law.** This new legislation amends Florida's Public Records and Sunshine Laws, by expanding "exemptions" applicable to bids, proposals and replies to sealed competitive solicitations, and closes evaluation meetings from the public in certain instances. First, Section 119.071, Florida Statutes was amended to provide that sealed bids, proposals, or replies received by a Florida public agency shall remain exempt from disclosure until an intended decision is announced or until 30 days from the opening, whichever is earlier. This means that Bidders will not be able to procure a copy of their competitors' bids until an intended decision is reached or 30 days has elapsed since the time of the bid opening. The prior version of the law provided for a 10-day exemption. Next, Section 286.0113, Florida Statutes was amended to provide that meetings of persons appointed to evaluate bids or proposals and negotiate contracts shall be closed in certain circumstances. Specifically, portions of such meetings may now be closed to the public during oral presentations made by a Bidder, or where a Bidder answers questions. In other words, neither Bidders, nor the public will be permitted to sit in on meetings, unless this exemption is waived by the City Council, wherein their competitors are making presentations or discussing their bid or proposal with the committee members. The portions of these meetings must still be recorded and are subject to disclosure at the time of an intended award decision or within 30 days of the bid or proposal opening, whichever is earlier. Portions of the meetings that do not involve presentations, questions and answers, or negotiation strategy or negotiation sessions are still open to the public and competing Bidders, but the new law limits public attendance to portions of such meetings.

77. **PURCHASE ORDER AND DELIVERY**

The successful Bidder shall not deliver products or provide services without a City of Port Orange purchase order, signed by an authorized agent of the City of Port Orange. The fastest, most reasonable delivery time shall be indicated by the Bidder. Any special information concerning delivery should also be included, on a separate sheet, if necessary. All items shall be shipped F.O.B. INSIDE DELIVERY unless otherwise stated in the specifications. This shall be understood to include bringing merchandise to the appropriate room or place designated by the using department. Every tender or delivery of goods must fully comply with all provisions of these requirements and the specifications including time, delivery and quality. Nonconformance shall constitute a breach which shall be rectified prior to expiration of the time for performance. Failure to rectify within the performance period shall be considered cause to reject future deliveries and cancellation of the contract by City of Port Orange without prejudice to other remedies provided by law. Where delivery times are critical, the City of Port Orange reserves the right to award accordingly.

78. **QUALITY**

All materials used for the manufacture or construction of any supplies, materials or equipment covered by this bid shall be new. The items bid must be new, the latest model, of the best quality and highest-grade workmanship unless otherwise specified in this bid by the City.

79. **QUESTIONS/INTERPRETATIONS**

Questions regarding interpretation of responses, solicitation results or solicitation awards shall be directed in writing to the Purchasing Division and referenced by the solicitation number no later than the last day for questions as specified in the solicitation documents. The City of Port Orange shall not be responsible for oral

interpretations given by any City personnel or representative or others. The issuance of a written addendum is the only official method whereby interpretation, clarification or additional information can be given.

80. **RECORDS/AUDIT**

(a) The contractor agrees that the City, or any duly authorized representative, shall, until the expiration of five (5) years after final payment hereunder, have access to and the right to examine and copy any pertinent books, documents, papers and records of the contractor involving transactions related to this contract.

(b) The contractor further agrees to include in any subcontract for more than $10,000 entered into as a result of this contract, a provision to the effect that the subcontractor agrees that the City or any duly authorized representative shall, until the expiration of five (5) years after final payment under the subcontract, have access to and the right to examine and copy any pertinent books, documents, papers and records of such contractor involved in transactions related to such subcontract, or this contract. The term subcontract as used herein shall exclude purchase orders for public utility services at rates established for uniform applicability to the general public.

(c) The period of access provided in subparagraphs (a) and (b) above for records, books, documents and papers which may relate to any arbitration, litigation, or the settlement of claims arising out of the performance of this contract or any subcontract shall continue until any appeals, arbitration, litigation or claims shall have been finally disposed of.

81. **RECYCLED MATERIALS**

City of Port Orange encourages the use of products made of recycled materials.

82. **REJECTING OF RESPONSES/RE-BIDDING**

The City reserves the right to accept or reject any or all responses or parts of responses, to waive irregularities and technicalities, and to request re-bids. The City also reserves the right to award the contract on such items the City deems will best serve the interests of the City. The City further reserves the right to award the contract on a "split order" basis, or such combination as shall best serve the interests of the City unless otherwise specified. The City Council shall have the authority to reject any and all responses. If the lowest and best response exceeds the budgeted amount and the City Council does not make additional funds available, the Purchasing Division with the help of the department head shall have the authority to re-advertise the article or articles for bidding after making sufficient changes in the plans or specifications to bring the cost within the limit of the money available. (Code 1981, § 8-28.)

83. **REQUEST FOR ADDITIONAL INFORMATION**

Prior to the final solicitation selection, Bidders may be required to submit additional information which the City may deem necessary to further evaluate the Bidder's qualifications to perform under the terms of the solicitation and subsequent contract.

84. **REVIEW OF RESPONSES/SUBMISSIONS**

Each response will be reviewed to determine if the response is responsive to the submission requirements outlined in the solicitation. A responsive response is one which follows the requirements of the solicitation, includes all required documentation, is submitted in the format outlined in the solicitation, is of timely submission, and has the appropriate signatures as required on each document. Failure to comply with these requirements may deem your response non-responsive.

85. **RIGHT OF WITHDRAWAL**

A bid, proposal, statement, or reply may not be withdrawn before the expiration of one-hundred-twenty (120) days from the response due date.

86. **RIGHTS TO SOLICITATION SUBMITTED MATERIAL**

All responses, inquiries, or correspondence relating to or in reference to a solicitation, and all reports, charts, and other documentation submitted by Bidders shall become the property of the City when received.

87. **RULES, REGULATIONS AND LICENSING REQUIREMENT**

The Bidder shall comply with all laws, ordinances and regulations applicable to the services contemplated herein, including those applicable to conflict of interest and collusion. Bidders are presumed to be familiar with all federal, state and local laws, ordinances, codes and regulations that may in any way affect the services offered.

88. **SAMPLES**

Samples, when requested, must be furnished at, or before the bid opening, (unless otherwise specified), and will be delivered at no charge to the City. If not used and/or destroyed in testing, said sample(s) will, at the Bidder's

request, be returned within thirty (30) days after bid award at the Bidder's expense. If requested by the City, samples and/or inspection of like items are to be made available in the central Florida area.

89. **SCRUTINIZED COMPANIES LIST**

The contractor shall refrain from any of the prohibited business activities with the Governments of Sudan and Iran as described in section 215.473, Florida Statutes. Pursuant to section 287.135(5), Florida Statutes, the City may immediately terminate this contract for cause if the contractor is found to have submitted a false certification or if the contractor is placed on the Scrutinized Companies with Activities in Sudan List or the Scrutinized Companies with Activities in the Iran Petroleum Energy Sector List or is engaged in business operations with Cuba or Syria during the term of the contract. The contractor shall provide a completed *Scrutinized Companies Certification* (Form 7.10), certifying the contractor's compliance with this section, prior to the execution of this contract.

90. **SEPARATION AND DISTRUBUTION**

The solicitation has been designed for transmittal as a complete document to interested parties. It is recommended that it not be separated; however, it may be reproduced in its entirety as additional distribution might dictate.

91. **SEVERABILITY**

If any section, subsection, paragraph, sentence, clause, phrase or word of these requirements or the specifications shall be held invalid, such holding shall not affect the remaining portions of these requirements and the specifications and it is hereby declared that such remaining portions would have been included in these requirements and the specifications as though the invalid portion had been omitted.

92. **SIGNATURE REQUIRED**

All responses must show the company name and be signed by a company officer or employee who has the authority to bind the company or firm by their signature. UNSIGNED RESPONSES WILL BE REJECTED. All manual signatures must be original - no rubber stamp, photocopy, etc.

93. **SIGNED RESPONSE CONSIDERED AN OFFER**

The signed response is considered an offer on the part of the Bidder, which offer shall be considered accepted upon approval by the City of Port Orange City Council (if required). The City of Port Orange will issue a purchase order or a letter of authorization to the successful Bidder, as authorization for delivery of the items awarded subject to requirements of detailed specifications and those contained herein. In the event of default on the part of the Bidder after such acceptance, the City may take such action as it deems appropriate including legal action for damages or specific performance.

94. **SILENCE OF SPECIFICATIONS**

The apparent silence of specifications as to any detail, or the apparent omission from it of a detailed description concerning any point, shall be regarded as meaning that only the best commercial practice is to prevail and that only material and workmanship of the finest quality are to be used. All interpretations of specifications shall be made on the basis of this statement. The items furnished under this contract shall be new, unused of the latest product in production to commercial trade and shall be of the highest quality as to materials used and workmanship. Manufacturer furnishing these items shall be experienced in design and construction of such items and shall be an established supplier of the item bid.

95. **SOCIAL, POLITICAL, OR IDEOLOGICAL INTERESTS**

Pursuant to Florida Statute 287.05701, the governing body of a county, municipality, special district, or any other political subdivision of the state may not request documentation of or consider a vendor's social, political, or ideological interests when determining if the vendor is responsible. Furthermore, an awarding body may not give preference to a vendor based on the vendor's social, political, or ideological interests.

96. **SOLICITATION FORM COMPLETION, SUBMISSION AND RECEIPT OF RESPONSES**

Unless otherwise specified, Bidders shall use the solicitation forms supplied by the Purchasing Division. Responses shall be typewritten or handwritten in ink and shall bear the original signature of the Bidder's authorized representative. Responses containing erasures or corrections must be initialed by the Bidder in ink. Responses shall be submitted by mail or hand delivery only. No response will be accepted by facsimile transmission, e-mail or other electronic delivery. Responses submitted by mail shall be addressed to: City Clerk, City of Port Orange, Attn: Purchasing Division, Port Orange City Hall, 1000 City Center Circle, Port Orange, Florida 32129. Responses submitted by hand delivery shall be delivered to: City Clerk, Port Orange City Hall, 1000 City Center Circle, Port Orange, Florida 32129. Responses will be accepted until 2:30 PM EST on the date

indicated in the solicitation documents or as addenda issued by the City. One (1) sealed envelope or package shall be submitted. The sealed envelope/package must contain the required forms and price proposals, where applicable, and will be evaluated and deemed responsive or non-responsive. All late responses will be returned to the Bidder and will not be opened. Bids (Envelope/Package) shall contain one (1) original and one (1) digital (CD or flash drive) version unless otherwise indicated in the legal advertisement and shall be mailed or delivered as set forth in the preceding paragraph in one (1) SEALED ENVELOPE/PACKAGE. The envelope/package shall be clearly marked on the outside to include the bid project name, bid number, name and address of the Bidder.

97. **STATE LICENSING REQUIREMENTS**

All entities defined under Chapters 607, 608, 617 or 620, Florida Statutes, seeking to do business with the City shall be on file and in good standing with the State of Florida's Department of State. Prior to making an offer, the Bidder shall have met the license, certification, and any other requirements of the state, county, city and/or other agency of authority with jurisdiction in such matters and should provide copies of documentation that evidence such qualifications with the response to the solicitation; and, that the Bidder shall provide follow-up evidence that the Bidder maintains such credentials throughout the period of the agreement. A copy of a current certificate of authority from the Secretary of State authorizing the Bidder/Proposer to do business in the State of Florida, or other evidence of legal authority to do business in the state, county, city and/or any other agency of authority should be provided with your response to the solicitation. Information concerning certification with the Secretary of State may be obtained at https://dos.myflorida.com/sunbiz/manage-business/certification/. Contract documents shall be executed by the entity's duly authorized officer as evidenced by entity records.

98. **SUBCONTRACTING**

The awarded Bidder will not sub-contract or enter into any subcontracting agreements pertaining to this contract, without obtaining written approval from the City of Port Orange.

99. **SUPPLEMENTAL MATERIALS**

Bidders are responsible for including all pertinent product data in the returned bid package. Literature, brochures, data sheets, specification information, completed forms requested as part of the bid package and any other facts which may affect the evaluation and subsequent contract award should be included. Materials such as legal documents and contractual agreements that the Bidder wishes to include as a condition of the bid must also be in the returned bid package. Failure to include all necessary and proper supplemental materials may be cause to reject the entire bid.

100. **TAXES**

The City of Port Orange is exempt from all federal excise, state and local taxes unless otherwise stated in this document. A Tax Exemption Certificate will be furnished upon written request to the City of Port Orange Purchasing Division.

101. **TERM CONTRACTS**

Acceptance by the City of Port Orange of Bidder's offer shall be limited to the terms herein unless expressly agreed in writing by the City. If the contract is intended to cover a specific time-period, the term will be given in the bid specifications.

102. **TERMINATION**

For Convenience: The City of Port Orange reserves the right to terminate the contract or any work or delivery required hereunder, from time to time either in whole or part, whenever the City Manager of Port Orange shall determine that such termination is in the best interest of the City. Termination, in whole or in part, shall be effected by delivery of a Notice of Termination signed by the City Manager or his designee, postmarked or delivered to the contractor at least thirty (30) days prior to the date of termination, and specifically setting forth the effective date of termination.

For Default: The City may terminate the contract if the contractor breaches any of the terms therein, including, but not limited to, warranties of the contractor or if the contractor becomes insolvent or commits acts of bankruptcy. Such right of termination is in addition to and not in lieu of any other remedies which the City of Port Orange may have in law or equity. Default may be construed as, but is not limited to, failure to deliver the proper goods and/or services within the proper amount of time, and/or to properly perform any and all services required to the City's satisfaction and/or to meet all other obligations and requirements. The City may cancel the contract at any time for breach of contractual obligations by providing the contractor with a written notice of such cancellation. Should the City exercise its right to cancel the contract for such reasons, the cancellation

shall become effective on the date as specified in the notice of cancellation sent to the contractor. In the event of default by the contractor, the City reserves the right to procure the item(s) bid from other sources and holds the contractor responsible for excess costs incurred as a result. City Council may elect to refrain from doing business with the contractor as stipulated in City Code 2-276 Suspension and Disbarment.

For Non-Appropriation of Funds: If funds are not appropriated for any succeeding fiscal years subsequent to the one in which this contract is entered into, for the purpose of this contract, then the City may terminate this contract upon thirty (30) days prior written notice to the contractor. Should termination be accomplished in accordance with this Section, the City shall be liable only for payments due through the date of termination.

103. **TITLE TRANSFER**

Title and Risk of Loss of goods shall not pass to City of Port Orange until City of Port Orange actually receives and takes possession of the goods at the point or points of delivery. Receiving times may vary with the using department. Generally, deliveries may be made between 8:30 a.m. and 3:00 p.m., Monday through Friday. The contractor is advised to consult the using department for instructions. The place of delivery shall be specified in the bid specification and/or on the purchase order as a "Deliver To:" address.

104. **UNBALANCED BID**

A mathematically unbalanced bid is when a Bidder places a high price on some items and a low price on other items in a unit price contract. A bid is materially unbalanced when there is reasonable doubt that acceptance of a mathematically unbalanced bid will result in the lowest overall cost to the City. Unbalanced bids will be rejected if the prices are deemed materially unbalanced.

105. **USE OF SOLICITATION FORMS**

The Bidder shall complete the appropriate solicitation form(s) included in the solicitation. All blanks on the solicitation forms shall be completed. If a question or confirmation is not applicable, it should be answered with an "N/A." Supplemental information may be attached to the solicitation forms. Failure to fully complete the appropriate solicitation forms may result in disqualification of the response. If additional space for a response is required, attach an additional page to the page on which the question is stated. Clearly identify the number of the question to which the response is attached. Further, if additional solicitation form pages are needed, photocopy or replicate as appropriate, and attach such additional pages to the page on which the question or chart is stated. The signature of the Authorized Person or entity must be that of an officer, partner or a sole proprietor of the entity making the response. The original response, and each copy submitted shall contain an original signature on the *Bidder's Acknowledgement Form* contained in each solicitation.

106. **VARIANCES**

For purposes of response evaluation, Bidders must indicate any variances, no matter how slight, contained in the response. No variations or exceptions by a Bidder will be considered or deemed a part of the response submitted unless such variances or exceptions are listed in the response and referenced in the space provided on the response pages. If variances are not stated, or referenced as required, it will be assumed that the product or service complies with the City's terms, conditions and specifications. By receiving a response, the City does not necessarily accept any variances contained in the response. All variances submitted are subject to review and approval by the City. If any response contains material variances that, in the City's sole opinion, make that response conditional in nature, the City reserves the right to reject the response or part of the response that is declared, by the City, as conditional.

107. **WAIVER OF IRREGULARITIES**

The City of Port Orange reserves the right to waive and/or reject any non-substantial irregularity in responses received whenever such waiver or rejection is in the best interest of the City and/or it does not meet the minimum requirements set forth. All reasonably responsive responses will be considered. However, the City reserves the right to waive formalities or informalities in responses, to reject, with or without cause, any or all responses or portions of responses, or to interview or not interview individual Bidders, and to accept any responses or portions of responses deemed to be in the best interest of the City. The City Council shall grant the City Manager the ability to waive any and all non-substantial irregularities in any and all formal solicitations. (Code 1981, § 8-29; Ord. No. 2015-17, § 1, 5-19-2015)

108. **WARRANTIES**

Bidders shall furnish all data pertinent to warranties or guarantees which may apply to items in the response. Bidders may not limit or exclude any implied warranties. The Bidder warrants that products sold to the City shall conform to the standards established by the U.S. Department of Labor under the Occupational Safety and Health Act of 1970. In the event product does not conform to OSHA Standards, where applicable, City of Port Orange may return the product for correction or replacement at the Bidder's expense. If the Bidder fails to make the appropriate correction within a reasonable time, City of Port Orange may correct at the Bidder's expense.

SECTION 6 – SPECIAL REQUIREMENTS/INSTRUCTIONS

PERIOD OF OFFER VALIDITY:

Bids offered in this ITB must remain firm for a period of one-hundred-twenty (120) days from the ITB opening date.

AWARD RECOMMENDATION:

It is the intent of the City to award a contract to the lowest responsive and responsible bidder for the Base Bid only.

After the responsive and responsible low bidder for the Base Bid is determined, based on funding availability, the City will choose whether to include the Additive Alternate #1.

CONTRACT TERM:

Two hundred-ten (210) days from issuance of a Notice to Proceed from the City for substantial completion for the term of the contract.

ELIGIBILITY OF BIDDER:

To be eligible to respond to this ITB, the Bidders must demonstrate proof of prior experience working with the services described in this ITB. Please provide eligibility experience with your submittal by completing Form 7.7 *Statement of Bidder's Qualifications* in its entirety. Bidders shall be licensed to do business in the State of Florida. Submit Sunbiz report showing your company registered as "Active". Bidders must be a Certified General Contractor and shall hold a Florida Contractor license. This license must be valid at the time of submittal of Contractor's bid. A copy of all required licenses must be provided with submittal (Section 7). During the course of the contract term, if any changes occur in awardee's licensure, the contractor must notify the City of Port Orange.

PROOF OF E-VERIFY REGISTRATION

Bidders who do not include proof of E-Verify registration with Form 7.12 *E-Verify Affidavit* may be deemed non-responsive. Bidders must include printed pages from the E-Verify website showing company name and E-Verify registration number (My Company Profile).

LICENSES AND PERMITS

Bidder is responsible for all applicable local and state licenses, permits and fees.

PAYMENT & PERFORMANCE BONDS

If awarded, the Bidder must be able to obtain payment and performance bonds from a surety company licensed in Florida **and must submit proof of their present bonding capacity with their bid submittal package in the form of a current (not older than 3 months) letter from Bidder's bonding agent**. Bidder's bonding capacity must be equal to or greater than 100% of the total amount bid. Bidders who do not include their present bonding capacity letter in their submittal package may be deemed non-responsive.

Upon award, the successful Bidder will be required to furnish and pay for a Payment and Performance Bond equal to one hundred percent (100%) of the contract amount to be recorded by the City, with the Clerk of the Circuit Court, Volusia County, Florida. After recording, the City will furnish to the awarded Bidder the recording information for the bond to evidence that the Bidder has met the requirement of Florida law. The City will bill the cost of recording to the awarded Bidder.

BID BONDS:
A certified check or bank draft, payable to the City of Port Orange, FL or a satisfactory bid bond executed by the Bidder and an acceptable surety in the amount equal to (5%) of the total amount of the bid shall be submitted with each bid. If submitting a bid bond in lieu of a certified check or bank draft, the original bid bond must be included with bid submittal. If submitting a bid bond in lieu of a certified check or bank draft, Bidders who do not include their original bid bond with their submittal may be deemed non-responsive.

NOTICE:
The City reserves the right to consider cooperative contracts, federal, state municipal etc., in the evaluation process. If in the City's best interest, the City may utilize a cooperative contract in lieu of making an award.

SAFETY:
The awarded Bidder will comply with all applicable OSHA, State of Florida Safety Regulations and comply with all construction safety requirements of local authorities having jurisdiction. The awarded Bidder shall exercise all due caution to exclude the public from the work area and especially from contact with any hazardous materials.

REPAIR OF DAMAGES:
It is the responsibility of the awarded Bidder to repair any damages incurred in the area that are directly related to the project. When damages occur, the City of Port Orange Representative is to be notified and shall inspect the repairs upon completion.

ADDITIONAL INSURANCE REQUIREMENTS:
In addition to the insurance requirements outlined on page 21 of this ITB, the awarded Contractor is required to provide Property Insurance Builder's Risk. The Limits for Property Insurance Builder's Risk are outlined on page 21.

[Remainder of page left intentionally blank]

SECTION 7 – REQUIRED FORMS

FORM 7.1 – BID SUBMITTAL CHECKLIST

_____ Form 7.2 – Bidder's Acknowledgement

_____ Form 7.3 – Addendum and Change Order Procedure Acknowledgement

_____ Form 7.4 – Drug Free Preference Statement

_____ Form 7.5 – Public Entity Crimes Statement

_____ Form 7.6 – Anti-Collusion

_____ Form 7.7 – Statement of Bidder's Qualifications

_____ Form 7.8 – Professional References for Previous Experience

_____ Form 7.9 – List of Subcontractors

_____ Form 7.10 – Scrutinized Companies Certification

_____ Form 7.11 – Local Business Affidavit of Eligibility

_____ Form 7.12 – E-Verify Affidavit

_____ Form 7.13 – Debarment, Suspension and Other Responsibility Matters

_____ Form 7.14 – Affidavit of Compliance with Section 287.138, Florida Statutes

_____ Form 7.15 – No Submittal Response

_____ Appendix A, 44 C.F.R. Part 18 – Certification Regarding Lobbying

_____ (Attachment 1) – Schedule of Unit Pricing

_____ Current Bonding Capacity Letter (as outlined in Section 6)

_____ Copy of all currently held Licenses (Contractor, Sunbiz, etc.)

_____ Current tax receipt for Bidder's municipality

_____ Original Bid Bond or certified check or bank draft (as outlined in Section 6)

_____ Submission of one (1) original marked "ORIGINAL" and one (1) digital (flash drive) version in PDF format

BY: _____
Name of Business

_____
Authorized Signature

_____
Date

This document must be completed and returned with your Submittal

FORM 7.2 – BIDDER'S ACKNOWLEDGEMENT

I have carefully examined the Invitation to Bid (ITB), Instructions to Bidders, General and/or Special Conditions, Specifications and any other documents accompanying or made a part of this invitation.

I hereby propose to furnish the goods or services specified in the ITB at the prices or rates as finally negotiated. I agree that my bid will remain firm for a period of up to one-hundred-twenty (120) days in order to allow the City of Port Orange adequate time to evaluate the proposed bid. Furthermore, I agree to abide by all conditions of the ITB.

I certify that all information contained in the bid is truthful to the best of my knowledge and belief. I further certify that I am duly authorized to submit this bid on behalf of the Bidder/Contractor as its act and deed and that the Bidder/Contractor is ready, willing and able to perform if awarded the contract.

I further certify that this bid is made without prior understanding, contract, connection, discussion or collusion with any person, firm or corporation submitting a bid for the same product or service; no officer, employee or agent of the City of Port orange City Council or of any other Bidder interested in said ITB; and that the undersigned executed this Bidder's Acknowledgement with full knowledge and understanding of the matters therein contained and was duly authorized to do so.

I further certify that having read and examined the specifications and documents for the designated services and understanding the general conditions for the contract under which services will be performed, does hereby propose to furnish all labor, equipment and material to provide the services set forth in the ITB.

I hereby declare that the following listing states any clarifications, any and all variations from and exceptions to the requirements of the specifications and documents. The undersigned further declares that the "work" will be performed in strict accordance with such requirements and understands that any exceptions to the requirements of the specifications and documents may render the bid non-responsive.

NO EXCEPTIONS ALLOWED AFTER THE BID IS SUBMITTED:

Please check one: ☐I take NO exceptions. ☐Exceptions (list below; add additional pages if necessary):

_____

_____

_____ _____

Name of Business Mailing Address

_____ _____

Authorized Signature City, State & Zip Code

_____ _____

Printed Name and Title Telephone Number

_____ _____

Federal Identification No. E-mail Address

STATE OF:_____ COUNTY OF: _____

The foregoing instrument was acknowledged before me by means of ☐physical presence or ☐online notarization, this

_____ day of _____, 2025, by_____ and who:

☐Is personally known to me; or ☐ has produced _____ as identification.

_____Notary Public, State of _____

Printed, typed or stamped name, commission and expiration:

This document must be completed and returned with your Submittal

FORM 7.3 – ADDENDUM AND CHANGE ORDER PROCEDURE ACKNOWLEDGEMENT

ADDENDUM ACKNOWLEDGEMENT

I have carefully examined the Invitation to Bid (ITB), Instructions to Bidders, General and/or Special Conditions, Specification and any other documents accompanying or made a part of this ITB.

I acknowledge receipt and incorporation of the following addenda and the cost, if any, of such revisions has been included in the price of the bid proposal.

Addendum#_____ Date:_____ Addendum#_____ Date:_____

Addendum#_____ Date:_____ Addendum#_____ Date:_____

CHANGE ORDER PROCEDURE ACKNOWLEDGEMENT

If awarded the Contract for this Solicitation, I acknowledge that no oral statement of any person shall modify or otherwise change or affect the terms, conditions or specifications stated in the resulting contract. All change order requests shall be made in writing by the Contractor for review by the Contract Administrator for the City of Port Orange. No work shall be performed as set forth in the change order until the Contractor receives an executed Purchase Order for the requested change.

I acknowledge the above statements regarding Addendum Acknowledgement and Change Order Procedures:

_____
Name of Business

_____
Authorized Signature

_____
Printed Name and Title

STATE OF:_____ COUNTY OF: _____

The foregoing instrument was acknowledged before me by means of ☐physical presence or ☐online notarization, this

_____ day of _____, 2025, by_____ and who:

☐Is personally known to me; or ☐ has produced _____ as identification.
_____

Notary Public, State of _____
Printed, typed or stamped name, commission and expiration:

This document must be completed and returned with your Submittal

FORM 7.4 – DRUG-FREE PREFERENCE STATEMENT

IDENTICAL TIE BIDS – Preference shall be given to businesses with drug-free workplace programs. Whenever two or more bids, proposals, statements or replies are equal with respect to price, quality and service are received by the City for procurement of commodities or contractual services, a bid received from a business that certifies that it has implemented a drug-free workplace program shall be given preference in the award process. Established procedures for processing tie bids will be followed if none of the tied Bidders have a drug-free workplace program.

In order to have a drug-free workplace program, a business shall:

1. Publish a statement notifying employees that the unlawful manufacture, distribution, dispensing, possession or use of a controlled substance is prohibited in the workplace and specifying the actions that will be taken against employees for violations of such prohibition.

2. Inform employees about the dangers of drug abuse in the workplace, the business's policy of maintaining a drug-free workplace, any available drug counseling, rehabilitation and employee assistance programs and the penalties that may be imposed upon employees for drug abuse violations.

3. Give each employee engaged in providing the commodities or contractual services that are under a bid a copy of the statement specified in subsection (1).

4. In the statement specified in subsection (1), notify the employees that, as a condition of working on the commodities or contractual services that are under the bid, the employee will abide by the terms of the statement and will notify the employer of any conviction of, or plea of guilty or nolo contendere to, any violation of chapter 893 or of any controlled substance the law of the United States or any state, for a violation occurring in the workplace no later than five (5) days after such conviction.

5. Impose a sanction on or require the satisfactory participation in a drug abuse assistance or rehabilitation program if such is available in the employee's community, by an employee who is so convicted.

6. Make a good faith effort to continue to maintain a drug-free workplace through implementation of Section 287.087, Florida Statutes.

As an authorized representative of the firm, I certify that this firm complies fully with the above requirements.

_____
Name of Business

_____
Authorized Signature

_____
Printed Name and Title

STATE OF:_____ COUNTY OF: _____

The foregoing instrument was acknowledged before me by means of ☐physical presence or ☐online notarization, this _____ day of _____, 2025, by_____ and who:

☐Is personally known to me; or ☐ has produced _____ as identification.

_____
Notary Public, State of _____
Printed, typed or stamped name, commission and expiration:

This document must be completed and returned with your Submittal

FORM 7.5 – SWORN STATEMENT ON PUBLIC ENTITY CRIMES

UNDER SECTION 287.133(3)(A), FLORIDA STATUTES

(To be signed in the presence of a notary public or other authorized to administer oaths.)

Before me, the undersigned Authority, personally appeared affiant_____, who, being by me first duly sworn, made the following statement:

1. The business address of _____(name of Offeror or business) is

   _____.

2. My relationship to _____(name of Offeror or business) is _____

   _____(relationship such as sole proprietor, partner, president, vice president.)
3. I understand that a public entity crime as defined in Section 287.133 of the Florida Statutes includes a violation of any state or federal law by a person with respect to and directly related to the transaction of business with any public entity in Florida or with an agency or political subdivision of any other state or with the United States, including, but not limited to, any proposal or contract for goods or services to be provided to any public entity or such and agency or political subdivision and involving antitrust, fraud, theft, bribery, collusion, racketeering, conspiracy or material misrepresentation.
4. I understand that "convicted" or "conviction" is defined by the Florida Statutes to mean a finding of guilt or a conviction of a public entity crime, with or without an adjudication of guilt, in any federal or state trial court of record relating to charges brought by indictment or information after July 1, 1989, as a result of a jury verdict, non-jury trial, or entry of a plea of guilt or nolo contendere.
5. I understand that "affiliate" is defined by the Florida Statutes to mean (1) a predecessor or successor of a person or a corporation convicted of a public entity crime, or (2) an entity under the control of any natural person who is active in the management of the entity and who has been convicted of a public entity crime, or (3) those officers, directors, executives, partners, shareholders, employees, members, and agents who are active in the management of an affiliate, or (4) a person or corporation who knowingly entered into a joint venture with a person who has been convicted of a public entity crime in Florida during the preceding 36 months.
6. Neither the Offeror or contractor, nor any officer, director, executive, partner, shareholder, employee, member or agent who is active in the management of the Offeror or contractor, nor any affiliate of the Offeror or contractor has been convicted of a public entity crime subsequent to July 1, 1989. **(Draw a line through paragraph 6 if paragraph 7 below applies.)**
7. There has been a conviction of a public entity crime by the Offeror or contractor, or an officer, director, executive, partner, shareholder, employee, member or agent of the Offeror or contractor who is active in the management of the Offeror or contractor or an affiliate of the Offeror or contractor. A determination has been made pursuant to Section 287.133(3) by order of the Division of Administrative Hearings that it is not in the public interest for the name of the convicted person or affiliate to appear on the convicted Bidder list. The name of the convicted person or affiliate is: _____. A copy of the order of the Division Administrative Hearing is attached. **(Draw a line through paragraph 7 if paragraph 6 above applies)**

_____
Name of Business

_____
Authorized Signature

STATE OF:_____

COUNTY OF: _____

_____
Printed Name and Title

The foregoing instrument was acknowledged before me by means of ☐physical presence or ☐online notarization, this _____ day of _____, 2025, by_____ and who:

☐Is personally known to me; or ☐ has produced _____ as identification.

_____Notary Public, State of _____

Printed, typed or stamped name, commission and expiration:

This document must be completed and returned with your Submittal

FORM 7.6 – ANTI-COLLUSION

By signing this form, the Bidder agrees that this bid is made without any other understanding, agreement or connection with any person, corporation or firm submitting a bid for the same purpose and that the bid is in all respects fair and without collusion or fraud.

SIGN in ink in the space provided below. Unsigned bids will be considered incomplete and will be disqualified and rejected.

IT IS AGREED BY THE UNDERSIGNED BIDDER THAT THE SIGNING AND DELIVERY OF THE BID REPRESENTS THE BIDDER'S ACCEPTANCE OF THE TERMS AND CONDITIONS OF THE FOREGOING SPECIFICATIONS, CONTRACT AND PROVISION, AND IF AWARDED, THIS CONTRACT WILL REPRESENT THE AGREEMENT BETWEEN THE BIDDERS AND THE CITY OF PORT ORANGE.

NAME OF FIRM: _____

SIGNED BY: _____
(MUST BE SIGNED BY A COMPANY OFFICER OR AUTHORIZED AGENT)

PRINTED SIGNATURE: _____

TITLE: _____

ADDRESS: _____

CITY, STATE AND ZIP CODE: _____

TELEPHONE: _____

F.E.I.N.: _____

NO bid may be withdrawn for a period of one-hundred-twenty (120) days subsequent to the submittal of the bids without the consent of the City of Port Orange.

This document must be completed and returned with your Submittal

FORM 7.7 – STATEMENT OF BIDDER'S QUALIFICATIONS

The undersigned warrants that he or she is duly authorized to complete this document, and hereby affirms that the information contained in Form 7.7 is complete, true and correct to the best of his or her knowledge and belief. If necessary, question may be answered on separate paper and attached with any additional information that may be pertinent.

A. Name of Bidder: _____

B. Permanent main office address: _____

C. Date organized: _____

D. If a corporation, where incorporated: _____

E. How many years have you been engaged in the business under your present firm or trade name? _____

F. Contracts on hand: (List these, showing amount of each contract and the approximate anticipated dates of completion.) **USE SEPARATE SHEET & ATTACH TO SUBMITTAL**

G. General character of work performed by your company: _____

H. Have you ever failed to complete any work awarded to you? If so, where and why?_____

I. Have you ever defaulted on a contract? If so, where and why? _____

J. List your major equipment currently owned or leased: **USE SEPARATE SHEET & ATTACH TO SUBMITTAL**

K. Background and experience of the principal members of your organization, including the officers: USE **SEPARATE SHEET & ATTACH TO SUBMITTAL**

L. Credit currently available: $_____

M. Give bank name, contact name and phone number: _____

Will you, upon request, fill out a detailed financial statement and furnish any other information that may be required by the Owner? ☐Yes☐No

The undersigned hereby authorizes and requests any person, firm or corporation to furnish any information requested by the Owner in verification of the recitals compromising the Statement of Bidder's Qualifications.

_____
Name of Business

_____
Authorized Signature

STATE OF:_____

COUNTY OF: _____

_____
Printed Name and Title

The foregoing instrument was acknowledged before me by means of ☐physical presence or ☐online notarization, this _____ day of _____, 2025, by_____ and who:

☐Is personally known to me; or ☐ has produced _____ as identification.

_____Notary Public, State of _____

Printed, typed or stamped name, commission and expiration:

This document must be completed and returned with your Submittal

FORM 7.8 – PROFESSIONAL REFERENCES FOR PREVIOUS EXPERIENCE

The Bidder proposes that they are qualified to perform the referenced work and has successfully done so on recent projects similar in nature and size. The City reserves the right to check references and confirm information provided herein. **Please provide three (3) current and correct references from clients for similar services. (DO NOT include the City of Port Orange)**

1. Company Name: _____

   Contact Person: _____

   City, State: _____

   Telephone Number: _____

   Email Address: _____

   Description of goods/services provided: _____

   Contract Amount: _____

   Start/End Date of Contract: _____

2. Company Name: _____

   Contact Person: _____

   City, State: _____

   Telephone Number: _____

   Email Address: _____

   Description of goods/services provided: _____

   Contract Amount: _____

   Start/End Date of Contract: _____

3. Company Name: _____

   Contact Person: _____

   City, State: _____

   Telephone Number: _____

   Email Address: _____

   Description of goods/services provided: _____

   Contract Amount: _____

   Start/End Date of Contract: _____

This document must be completed and returned with your Submittal.

FORM 7.8 – PROFESSIONAL REFERENCES FOR PREVIOUS EXPERIENCE (page 2)

LISTING OF PREVIOUS EXPERIENCE
COMMERCIAL CLIENT LIST

The Bidder proposes that they are qualified to perform the referenced work and has successfully done so on recent projects similar in nature and size. A minimum of three (3) projects must be listed below. The Owner reserves the right to check references and confirm information provided herein.

List clients to whom you currently provide or have in the past provided equal or similar services to those required under the City's contract as outlined in this bid package. A minimum of three (3) projects shall be listed below in order to bid on this contract. The Owner reserves the right to check references and confirm information provided herein.

1. Contact Name: _____

   Phone: _____

   Current Client: ☐Yes ☐ No

   Number of years of service provided: _____

   Description of service: _____

   _____

2. Contact Name: _____

   Phone: _____

   Current Client: ☐Yes ☐ No

   Number of years of service provided: _____

   Description of service: _____

   _____

3. Contact Name: _____

   Phone: _____

   Current Client: ☐Yes ☐ No

   Number of years of service provided: _____

   Description of service: _____

   _____

This document must be completed and returned with your Submittal.

FORM 7.9 – LISTING OF SUBCONTRACTORS

The Bidder proposes that the following subcontractors are qualified to perform the referenced work and have successfully done so on recent projects similar in nature and size. All subcontractors whose work product accounts for 5% or more of the total contract value shall be listed. Upon approval of subcontractors listed, the successful **Bidder shall not substitute subcontractors without approval from the City Representative**. Bidder shall attach additional sheets as necessary.

Subcontractor No. 1

Name: _____

Description of Work: _____

Percent of Contract Price: _____

Previous Experience Together: ☐Yes ☐No

Subcontractor No. 2

Name: _____

Description of Work: _____

Percent of Contract Price: _____

Previous Experience Together: ☐Yes ☐No

Subcontractor No. 3

Name: _____

Description of Work: _____

Percent of Contract Price: _____

Previous Experience Together: ☐Yes ☐No

Subcontractor No. 4

Name: _____

Description of Work: _____

Percent of Contract Price: _____

Previous Experience Together: ☐Yes ☐No

Subcontractor No. 5

Name: _____

Description of Work: _____

Percent of Contract Price: _____

Previous Experience Together: ☐Yes ☐No

This document must be completed and returned with your submittal

FORM 7.10 SCRUTINIZED COMPANIES CERTIFICATION

(To be signed in the presence of a notary public or other officer authorized to administer oaths.)

SCRUTINIZED COMPANIES CERTIFICATION PURSUANT TO SECTION 287.135, FLORIDA STATUTES

I, _____, on behalf
(Print Name and Title)

of_____ ("Company"), certify that _____
(Company Name) (Company Name)

does not:
1. Participate in a boycott of Israel; and
2. Is not on the Scrutinized Companies with Boycott Israel List; and
3. Is not on the Scrutinized Companies with Activities in Sudan List; and
4. Is not on the Scrutinized Companies with Activities in the Iran Petroleum Energy Sector List; and
5. Has not engaged in business operations in Syria.

Submitting a false certification shall be deemed a material breach of contract. The City of Port Orange shall provide notice, in writing, to the Company of the City's determination concerning the false certification. The Company shall have ninety (90) days following receipt of the notice to respond in writing and demonstrate that the determination of false certification was made in error. If the Company does not demonstrate that the City's determination of false certification was made in error, then the City shall have the right to terminate the contract and seek civil remedies pursuant to Florida Statute § 287.135.

Section 287.135, Florida Statutes prohibits the City from: 1) Contracting with companies for goods or services in any amount if at the time of bidding on, submitting a proposal for, or entering into or renewing a contract if the company is on the Scrutinized Companies that Boycott Israel List, created pursuant to Section 215.4725, F.S. or is engaged in a boycott of Israel; and 2) Contracting with companies for goods or services over $1,000,000.00 that are on either the Scrutinized Companies with activities in the Iran Petroleum Energy Sector List, created pursuant to s. 215.473, or are engaged in business operations in Syria.

As the person authorized to sign on behalf of the Company, I hereby certify that the company identified above in the section entitled "Company Name" does not participate in any boycott of Israel, is not listed on the Scrutinized Companies that Boycott Israel List, is not listed on either the Scrutinized Companies with activities in the Iran Petroleum Energy Sector List and is not engaged in business operations in Syria. I understand that pursuant to Section 287.135, Florida Statutes, the submission of a false certification may subject the company to civil penalties, attorney's fees, and/or costs. I further understand that any contract with the City for goods or services may be terminated at the option of the City if the company is found to have submitted a false certification or has been placed on the Scrutinized Companies with Activities in Sudan List or the Scrutinized Companies with Activities in the Iran Petroleum Energy Sector List.

_____ _____
COMPANY NAME SIGNATURE

_____ _____
PRINT NAME TITLE

STATE OF FLORIDA COUNTY OF: _____

The foregoing instrument was acknowledged before me by means of ☐physical presence or ☐online notarization, this _____ day of _____, 2025, by_____ and who:

☐Is personally known to me; or ☐ has produced _____ as identification.

_____Notary Public, State of _____
Printed, typed or stamped name, commission and expiration:

This document to be completed and returned with your Submittal

FORM 7.11 – LOCAL BUSINESS AFFIDAVIT OF ELIGIBILITY

City of Port Orange

This declaration is executed under penalty of perjury of the laws to the United States and the State of Florida

THIS AFFIDAVIT IS SUBMITTED IN REFERENCE TO THE FOLLOWING SOLICITATION:

Project# *(as applicable)*: _____

Business Name: _____ Contact Person/Title: _____

Mailing Address: _____ City,State,Zip: _____

Phone Number: _____ Email address: _____

Physical Presence of Business: ☐Headquarters ☐Principal Place of Business

Within Legal Boundaries: ☐City of Port Orange ☐Volusia County ☐State of Florida

FEIN (Federal Employer Identification Number): _____

Business Structure: ☐Corporation ☐LLC ☐Partnership ☐Sole Proprietorship ☐Other (Specify): _____

****PLEASE ATTACH A VALID BUSINESS TAX RECEIPT OR OTHER SUCH DOCUMENTATION****

ATTESTATION – I understand that:
A local supplier or contractor is interpreted as a respondent to a solicitation, which as of the date of the solicitation opening, has a valid Business Tax Receipt (BTR) issued by the City of Port Orange to do business in the City of Port Orange which authorizes the supplier or contractor to provide the goods, services, or construction to be purchased and has a physical address located within the limits of Port Orange from which the supplier or contractor operates or performs business. A Post Office Box cannot be used to establish physical address. This local preference is only used as part of a tie breaker during a formal solicitation. The City uses Sunbiz to verify a supplier or contractor's business address. Sunbiz is a database on the Florida Department of State, Division of Corporations website and can be accessed using this link: https://dos.myflorida.com/sunbiz/.

Exemptions from Local Preference
Local preference is not permitted when (1) the purchase is funded, in whole or in part, by an entity prohibiting application of the preferences by grant agreement, contract or applicable federal, state or local law; or (2) emergency purchasing.

As an authorized representative of the Firm, I certify that this Firm complies fully with the above requirements.

_____
Name of Business

_____
Authorized Signature

STATE OF:_____

COUNTY OF: _____

_____
Printed Name and Title

The foregoing instrument was acknowledged before me by means of ☐physical presence or ☐online notarization, this _____ day of _____, 2025, by_____ and who:

☐Is personally known to me; or ☐ has produced _____ as identification.

_____
Notary Public, State of _____
Printed, typed or stamped name, commission and expiration:

This document must be completed and returned with your Submittal

FORM 7.12 – E-VERIFY AFFIDAVIT

CITY OF PORT ORANGE

CONTRACTOR E-VERIFY AFFIDAVIT

IN ACCORDANCE WITH SECTION 448.095, FLORIDA STATUTES

Project Name: _____

Solicitation Number: _____

I, the undersigned hereby certify that _____ (insert contractor company name) does not employ, contract with or subcontract with an unauthorized alien, and is otherwise in full compliance with Section 448.095, Florida Statutes.

I acknowledge that it is my responsibility to ensure full compliance with Section 448.095, Florida Statutes. I am aware enrollment in the E-Verify system for employers can be done at www.e-verify.gov.

A true and correct copy of _____ (insert contractor company name) proof of registration in the E-Verify system is attached to this Affidavit.

By affixing my signature below, I hereby affirm that I am duly authorized to bind the company reference herein and I will comply with all applicable E-Verify requirements.

_____ _____

Print or Type Name, Title Signature of Affiant

_____ _____

Federal Employer ID Number (FEIN) E-Verify Number

STATE OF FLORIDA

COUNTY OF: _____

The foregoing instrument was acknowledged before me by means of ☐physical presence or ☐online notarization, this _____ day of _____, 2025, by_____ and who:

☐Is personally known to me; or ☐ has produced _____ as identification.

_____Notary Public, State of _____

Printed, typed or stamped name, commission and expiration:

This document to be completed and returned with your Submittal

FORM 7.13 – CERTIFICATION REGARDING DEBARMENT, SUSPENSION AND OTHER RESPONSIBILITY MATTERS

Primary Covered Transactions

(To be completed by Prime Contractor)

1. The prospective participant certifies to the best of its knowledge and belief that it and its principals:
   (a) Are not presently debarred, suspended, proposed for debarment, declared ineligible or voluntarily excluded from covered transactions by and Federal department or agency;
   (b) Have not within a three-year period preceding this proposal bee convicted for had a civil judgement rendered against them for commission of fraud or a criminal offense in connection with obtaining, attempting to obtain or performing a public (Federal, State or local) transaction or contract under a public transaction; violation of Federal or State antitrust statutes or commission of embezzlement, theft forgery, bribery, falsification or destruction of records, making false statement or receiving stolen property.
   (c) Are not presently indicted for or otherwise criminally or civilly charged by a governmental entity (Federal, State or local) with commission of any of the offenses enumerated in paragraph 1. (b) of this certification;
   (d) Have not within a three-year period preceding this application/proposal had one or more public transactions (Federal, State or local) terminated for cause or default.
2. Where the prospective primary participant is unable to certify to any of the statements in this certification, such prospective participant shall attach an explanation to this proposal.

_____	_____
Organization Name	Bid Number or Project Name
_____	_____
Name and Title of Authorized Representative	Signature Date

This document must be completed and returned with your Submittal

FORM 7.14 – AFFIDAVIT OF COMPLIANCE WITH SECTION 287.138, FLORIDA STATUTES

AFFIDAVIT OF COMPLIANCE WITH SECTION 287.138, FLORIDA STATUTES CONTRACTING WITH FOREIGN ENTITIES OF CONCERN

The undersigned ("Affiant"), on behalf of the entity listed below ("Entity"), hereby attests under penalty of perjury as follows:

1. Affiant is the _____ of _____
   (Title) (Business Name)
   which does business in the State of Florida, hereinafter called the "Entity".
2. Entity is not owned by the government of a foreign country of concern, as defined in Section 287.138 (1) (c), Florida Statutes.
3. The government of a foreign country of concern does not have a controlling interest in Entity, as defined in Section 287.138 (1)(a), Florida Statutes.
4. Entity is not organized under the laws of, and does not have a principal place of business in, a foreign country of concern.
5. Entity is not owned or controlled by the government of a foreign country of concern.
6. For purposes of this affidavit, a foreign country of concern means the People's Republic of China, the Russian Federation, the Islamic Republic of Iran, the Democratic People's Republic of Korea, the Republic of Cuba, the Venezuelan regime of Nicolas Maduro, or the Syrian Arab Republic, including any agency of or any other entity of significant control of such foreign country of concern, as defined in Section 287.138(1)(c), Florida Statutes.

The undersigned is authorized to execute this affidavit on behalf of the Entity.

Date: _____, 20___ Signed: _____

Entity: _____ Name: _____

Title: _____

STATE OF: _____ COUNTY OF: _____

The foregoing instrument was acknowledged before me by means of ☐physical presence or ☐online notarization, this _____ day of _____, 2025, by_____ and who:

☐Is personally known to me; or ☐ has produced _____ as identification.

_____

Notary Public, State of Florida at Large: (seal)

Printed Name/Seal of Notary, Commission and Expiration Date:

My commission expires: _____

This document must be completed and returned with your Submittal

FORM 7.15 – NO BID RESPONSE

If your company will not be submitting a proposal in response to this solicitation, please complete this form and return via e-mail prior to the solicitation due date established within to:

City of Port Orange
Purchasing Division
1000 City Center Circle
Port Orange, FL 32129
purchdiv@port-orange.org

This information will assist the Purchasing Division in the preparation of future solicitations.

Solicitation: ITB #25-02 Construction of Forestry Building

Company Name: _____

Contact Person Name & Title: _____

Address: _____

Telephone: _____ Email Address: _____

Please check a reason for a "no response".

☐Specifications "too tight" or geared toward on brand or manufacturer (please explain below)

☐Insufficient time to respond

☐Specifications unclear (please explain below)

☐We do not offer this product/service or an equivalent

☐Our product schedule does not permit us to perform within stated timeline for the project

☐Unable to meet specifications

☐Unable to meet bond requirements

☐Unable to hold prices firm throughout the term of the contract period

☐Unable to meet insurance requirements

☐Other: _____

Print Name: _____

Signature: _____ Date:_____

Additional Information:

_____

_____

_____

_____

If submitting this form, only this form needs to be returned. It is not necessary to return the entire solicitation package.

APPENDIX A, 44 C.F.R. PART 18 – CERTIFICATION REGARDING LOBBYING Certification for Contracts, Grants, Loans, and Cooperative Agreements

(Required for each bid or offer exceeding $100,000)

The undersigned certifies, to the best of his or her knowledge and belief, that:

1. No federal appropriated funds have been paid or will be paid, by or on behalf of the undersigned, to any person for influencing or attempting to influence an officer or employee of an agency, a Member of Congress, an officer or employee of Congress, or an employee of a Member of Congress in connection with the awarding of any federal contract, the making of any federal grant, the making of any federal loan, the entering into of any cooperative agreement, and the extension, continuation, renewal, amendment, or modification of any federal contract, grant, loan, or cooperative agreement.

2. If any funds other than federal appropriated funds have been paid or will be paid to any person for influencing or attempting to influence an officer or employee of any agency, a Member of Congress, an officer or employee of Congress, or an employee of a Member of Congress in connection with this federal contract, grant, loan, or cooperative agreement, the undersigned shall complete and submit Standard Form-LLL, "Disclosure Form to Report Lobbying," in accordance with its instructions.

3. The undersigned shall require that the language of this certification be included in the award documents for all subawards at all tiers (including subcontracts, subgrants, and contracts under grants, loans, and cooperative agreements) and that all subrecipients shall certify and disclose accordingly.

4. This certification is a material representation of fact upon which reliance was placed when this transaction was made or entered into. Submission of this certification is a prerequisite for making or entering into this transaction imposed by section 1352, Title 31, U.S.C. Any person who fails to file the required certification shall be subject to a civil penalty of not less than $10,000 and not more than $100,000 for each such failure.

The Contractor, _____, certifies or affirms the truthfulness and accuracy of each statement of its certification and disclosure, if any. In addition, the Contractor understands and agrees that the provisions of 31 U.S.C. Chap. 38, Administrative Remedies for False Claims and Statements, apply to this certification and disclosure, if any.

_____

Signature of Contractor's Authorized Official

_____

Name & Title of Contractor's Authorized Official

Date: _____

(ATTACHMENT 1) - SCHEDULE OF UNIT PRICING
ITB #25-02 Construction of Forestry Building

Completed (Attachment 1) Schedule of Unit Pricing MUST be included with Bid Submission

Bidders must complete all field shown in green	
Name of Business:	
Contact Person:	
Email Address:	
Authorized Signature:	

ALL UNIT PRICING IN ACCORDANCE WITH SECTION 3 - SCOPE OF WORK		
Description	**Unit of Measure**	**Price**
Base Bid: Construction of a new 5,226 Sq. Ft. metal Forestry Management storage building and 6,631 Sq. Ft. of 6" stabilized access path on the City's wellfield property.	**Lump Sum**	**$**
Additive Alternate #1: Install 3" of recycled asphalt pavement on top of the 6.631 Sq. Ft. 6" stabilized base.	**Lump Sum**	**$**

BID BOND

BID BOND

Bond No.:

KNOW ALL MEN BY THESE PRESENTS that _____, as Contractor, duly authorized to conduct business in the State of Florida, whose principal place of business is located at , Tel.: _____, (hereinafter called "PRINCIPAL"), and _____ , as SURETY, duly authorized to conduct business in the State of Florida, whose principal place of business is located at _____, Tel:_____(hereinafter called "SURETY"), are held and firmly bound unto the City of Port Orange, Florida, as CITY, a Florida municipal corporation, whose address is City of Port Orange, 1000 City Center Circle, Port Orange, Florida 32129, Tel: (386) 506-5501, (hereinafter called "OBLIGEE" or CITY", in the penal sum of_____dollars and (_____)/100 ($_____), lawful money of the United States, for the payment of which sum shall and truly be made, whereof PRINCIPAL and SURETY bind themselves, their heirs, executors, administrators, successors and assigns, jointly and severally, firmly by these presents.

THE CONDITION OF THIS OBLIGATION IS SUCH that, whereas the Principal has submitted the accompanying bid, dated_____, 20_____ , for:

Project Name/Bid No.:

Project Address:

Legal Description: See Attached

Description of Work:

NOW, THEREFORE,

A. If the Principal shall not withdraw said bid withing one hundred twenty (120) days after date of opening of the same, and shall within ten (10) days after the prescribed forms are presented to it for signature, enter into a written contract with the City in accordance with the bid as accepted, and give bonds with good and sufficient surety or sureties, as may be required, for the faithful performance and proper fulfillment of such contract, then the above obligations shall be void and of no effect, otherwise to remain in full force and virtue.

B. In the event of the withdrawal of said bid within the period specified, or the failure to enter into such contract and give such bonds withing the time specified, if the principal shall pay the City the difference between the amount specified in said bid and the amount for which the City may procure the required work and supplies. If the latter amount be in excess of the former, then the above obligations then the above obligations shall be void and of no effect, otherwise to remain in full force and virtue.

IN WITNESS WHEREOF, the above parties have executed this instrument under their several seals, this _____day of_____, 20____, the name and corporate seal of each corporate party being hereto affixed and these presents duly signed by its undersigned representative, pursuant to authority of its governing body.

Note: If the firm is a sole ownership or partnership including limited liability company, two (2) witnesses are required to attest the signature. If the firm is a corporation, then the corporate secretary shall attest and affix the corporate seal (Attach power of attorney to the original bid bond and financial statement of Surety Company).

PRINCIPAL:

_____
Signature

_____
Corporate Officer & Title

ATTEST:

_____
Signature

_____
Corporate Secretary (Affix Corporate Seal)

WITTNESSESS:

_____

_____

ATTEST:

_____
Signature

_____
Corporate Secretary (Affix Corporate Seal)

SURETY:

_____
Attorney-in-Fact (signature)

_____
Name & Title

_____
Name of Local Resident Agent

_____
City, State, Zip

_____
Telephone:
A.M. Best No.:_____ NAIC No.:_____

STATE OF _____

COUNTY OF _____

Before me this day personally appeared _____ (affiant), who, being duly sworn, deposes and says that he/she is the Attorney-in-Fact for the _____(corporate surety) and that this person has been authorized by _____ (corporate surety) to execute the foregoing bond on behalf of the Contractor named therein in favor of the City of Port Orange, Florida.

_____
Signature of Affiant

The foregoing instrument was acknowledged before me by means of ☐physical presence or ☐online notarization, this

_____ day of _____, 2025, by_____ and who:

☐Is personally known to me; or ☐ has produced _____ as identification.

_____

Notary Public, State of _____
Printed, typed or stamped name, commission and expiration:

END OF BID BOND

This document must be completed and returned with your Submittal

PAYMENT & PERFORMANCE BOND (for informational purposes only)

FRONT PAGE FOR BOND REQUIRED BY SECTION 255.05, F.S.

PAYMENT AND PERFORMANCE BOND

(Public Works)

Notice and Time Limitations Must Be In Accordance
With Section 255.05(2), (8) and (10), Florida Statutes

BOND NO. _____

PRINCIPAL:
Developer or Contractor: _____
Principal Business Address: _____
_____
Contact Person: _____
Phone Number: _____

SURETY: _____
Address: _____
_____

Contact Person: _____
Phone Number: _____

OWNER: City of Port Orange, Florida, a chartered municipal corporation
1000 City Center Circle
Port Orange, Florida 32129-4144
Contact Person: City Manager
Phone Number: (386) 506-5501

Amount: $_____ **City Case: _____**

Description of Work: _____

Project Location: _____
_____

Legal Description: _____

Front Page

All other pages are subsequent to this page regardless of any numbers that may be printed thereon.

Bond No._____

COMBINATION PAYMENT AND PERFORMANCE BOND
FOR
PUBLIC CONSTRUCTION

per Section 255.05, Florida Statutes
Guaranty for Construction of Public Improvements

BY THIS BOND, We, _____, as Principal, and _____, a corporation, as Surety, are bound to_____, aFlorida municipal corporation, herein called "Owner" or sometimes referred to as "City," in the sum of _____ **AND**____**/100 DOLLARS** (**$**_____), for payment of which we bind ourselves, our heirs, personal representatives, successors, and assigns, jointly and severally.

THE CONDITION OF THIS BOND is that if Principal:

1. Performs the terms of that certain Standard Contract for Services, having an effective date of _____, entered into by and between the Principal and the City, for Police Department Duct/HVAC Mold Remediation, hereinafter referred to as the "Contract," being made a part of this bond by reference, at the times and in the manner prescribed in the Contract; and

2. Promptly makes payments to all claimants, as defined in Section 255.05(1), Florida Statutes, supplying Principal with labor, materials, or supplies, used directly or indirectly by Principal in the prosecution of the work provided for in the Contract (the "Work"); and

3. Pays Owner all losses, damages, delay damages (including contractually authorized liquidated damages), expenses, costs, and attorney's fees, including appellate proceedings, that Owner sustains because of a breach or material breach by Principal under the Contract documents; and

4. Performs the guarantee of all work and materials furnished under the Contract for the time specified in the Contract, then this bond is void; otherwise, it remains in full force.

Notice of Nonpayment and Time Limitations

Any action instituted by a claimant under this bond for payment must be in accordance with the notice and time limitation provisions in Sections 255.05(2), (8) and (10), Florida Statutes.

Any changes in or under the contract documents and compliance or noncompliance with any formalities connected with the contract or the changes does not affect Surety's obligation under this bond.

IN WITNESS WHEREOF, this performance and payment bond is executed and shall be deemed an original, this__, day of_____, 20___.

Attest:

_____
(Principal)

_____ By:_____
(As to Corporate Principal) Secretary Name, Title

_____ *(Corporate Seal)*
(Witness to Principal)

_____
(Surety)

_____ By:_____
(Witness to Surety)

Name: _____
(Attorney-in-Fact)

(Corporate Seal)

NOTE: ***Date of BOND must not be prior to date of Contract.*** *If Developer/Principal is Partnership, all partners should executeBOND. All BONDS signed by an agent must be accompanied by a certified copy of the authority to act.*

IMPORTANT: Surety companies executing BONDS must appear on the Treasury Department's most current list (Circular 570 asamended) and be authorized to transact business in the State of Florida.

This affidavit must be completed and returned by the Awarded Bidder, upon issuance of a Notice of Intent to Award by the Purchasing Division of the City of Port Orange.

LEASED EMPLOYEE AFFIDAVIT

EXHIBIT CONTRACT #_____

☐ I hereby certify that I do not utilize an employee leasing company or employ leased employees. I further agree to notify the City in the event these circumstances change.

OR

☐ I affirm that an employee leasing company provides my workers' compensation coverage. I further understand that my contract with the employee leasing company limits my workers' compensation coverage to enrolled worksite employees only. My leasing arrangement does not cover un-enrolled worksite employees, independent contractors, uninsured sub-contractors or casual labor exposure.

I hereby certify that 100% of my workers are covered as worksite employees with the employee leasing company. I certify that I do not hire any casual or uninsured labor outside the employee leasing agreement. I agree to notify the City in the event that I have any workers not covered by the employee leasing workers' compensation policy. In the event that I have any workers not subject to the employee leasing arrangement, I agree to obtain a separate workers' compensation policy to cover these workers. I further agree to provide the City with a certificate of insurance providing proof of workers' compensation coverage prior to these workers entering any City jobsite.

I further agree to notify the City if my employee leasing arrangement terminates with the employee leasing company and I understand that I am required to furnish proof of replacement workers' compensation coverage prior to the termination of the employee leasing arrangement.

I certify that I have workers' compensation coverage for all of my workers through the employee leasing arrangement specified below:

Name of Employee Leasing Company: _____

Workers' Compensation Carrier: _____

A.M. Best Rating of Carrier: _____

Inception Date of Leasing Arrangement: _____

I further agree to notify the City in the event that I switch employee leasing companies. I recognize that I have an obligation to supply an updated workers' compensation certificate to the City that documents the change of carrier.

I hereby attest that the information provided in this affidavit is accurate. In addition, I certify that I have read and understand the above statements regarding my responsibility under the workers' compensation coverage.

Name of Contractor: _____

Signature of Owner/Officer: _____

Title: _____ Date: _____

This affidavit must be completed and returned by the Awarded Bidder, upon issuance of a Notice of Intent to Award by the Purchasing Division of the City of Port Orange. Please note, the City of Port Orange does not accept exemptions for Workers' Compensation coverage.

AFFIDAVIT REGARDING WORKERS' COMPENSATION

State of _____

County of _____

I, _____, being duly sworn according to law, deposes and says (it, he, she, they) have accepted the Workers' Compensation laws of the State of Florida, with its supplements and amendments and has insured (its, his, her, their) liability there under accordance with the terms of sail Laws with the _____ Company, under the terms of Policy Number _____ for a period from _____, 20____ to _____, 20____.

WITNESS:

By:_____

Name:_____

CONTRACTOR:

Company:_____

By:_____

Name/Title: _____

Sworn to/Affirmed and subscribed before me this _____ day of _____, 20____, by _____, who is personally known to me or who produced _____ as identification.

_____

NOTARY PUBLIC – STATE OF

Type or Print Name:_____

Commission No.: _____

Commission Expires:_____

(Seal)

IMPORTANT: This certificate must be completed and returned by the Awarded Proposer, upon issuance of a Notice of Intent to Award by the Purchasing Department of the City of Port Orange.

HUMAN TRAFFICKING AFFIDAVIT
(SECTION 787.06, FLORIDA STATUTES)

STATE OF FLORIDA §
§
COUNTY OF VOLUSIA §

The undersigned ("Affiant"), on behalf of the entity listed below ("Entity"), after being duly sworn, hereby attests as follows:

1. My name is _____. I am over the age of Twenty-one years old. I am the _____ of _____, a non- governmental entity which does business in the State of Florida, hereinafter called the "Entity."
   (Title) **(Business Name)**
2. I have personal knowledge of each, and every statement of fact contained herein, and each and every statement of fact is true and correct.
3. Entity does not use coercion, as defined in Section 787.06, Florida Statutes, for labor or services.
4. The undersigned is an officer or representative of the entity and is authorized to execute this affidavit on behalf of the Entity.
5. Under penalties of perjury, I declare that I have read the foregoing Human Trafficking Affidavit and that the facts stated herein are true.

Further Affiant sayeth not.

Date: _____, 20___

Signed: _____
Print Name: _____
Title: _____

SUBSCRIBED AND SWORN before me by means of [_XX_] physical presence or [__] online notarization on the ____ day of _____, 20__ by _____ as _____ on behalf of _____ who is personally known to me or who has produced _____ as identification.

(Notary Seal)

_____
Notary Public, State of Florida
Printed name, commission and expiration of commission term

DRAFT AIA® Document A101® – 2017

Standard Form of Agreement Between Owner and Contractor where the basis of payment is a Stipulated Sum

AGREEMENT made as of the « » day of « » in the year « »
(In words, indicate day, month and year.)

BETWEEN the Owner:
(Name, legal status, address and other information)

« »« »
« »
« »
« »

and the Contractor:
(Name, legal status, address and other information)

« »« »
« »
« »
« »

for the following Project:
(Name, location and detailed description)

« »
« »
« »

The Architect:
(Name, legal status, address and other information)

« »« »
« »
« »
« »

The Owner and Contractor agree as follows.

ADDITIONS AND DELETIONS: The author of this document has added information needed for its completion. The author may also have revised the text of the original AIA standard form. An *Additions and Deletions Report* that notes added information as well as revisions to the standard form text is available from the author and should be reviewed.

This document has important legal consequences. Consultation with an attorney is encouraged with respect to its completion or modification.

The parties should complete A101®–2017, Exhibit A, Insurance and Bonds, contemporaneously with this Agreement. AIA Document A201®–2017, General Conditions of the Contract for Construction, is adopted in this document by reference. Do not use with other general conditions unless this document is modified.

ELECTRONIC COPYING of any portion of this AIA® Document to another electronic file is prohibited and constitutes a violation of copyright laws as set forth in the footer of this document.

AIA Document A101 – 2017. Copyright © 1915, 1918, 1925, 1937, 1951, 1958, 1961, 1963, 1967, 1974, 1977, 1987, 1991, 1997, 2007 and 2017. All rights reserved. "The American Institute of Architects," "American Institute of Architects," "AIA," the AIA Logo, and "AIA Contract Documents" are trademarks of The American Institute of Architects. This draft was produced at 14:05:32 ET on 02/16/2024 under Order No.2114457573 which expires on 07/31/2024, is not for resale, is licensed for one-time use only, and may only be used in accordance with the AIA Contract Documents® Terms of Service. To report copyright violations, e-mail docinfo@aiacontracts.com.
User Notes: (892032825)

TABLE OF ARTICLES

1 THE CONTRACT DOCUMENTS

2 THE WORK OF THIS CONTRACT

3 DATE OF COMMENCEMENT AND SUBSTANTIAL COMPLETION

4 CONTRACT SUM

5 PAYMENTS

6 DISPUTE RESOLUTION

7 TERMINATION OR SUSPENSION

8 MISCELLANEOUS PROVISIONS

9 ENUMERATION OF CONTRACT DOCUMENTS

EXHIBIT A INSURANCE AND BONDS

ARTICLE 1 THE CONTRACT DOCUMENTS

The Contract Documents consist of this Agreement, Conditions of the Contract (General, Supplementary, and other Conditions), Drawings, Specifications, Addenda issued prior to execution of this Agreement, other documents listed in this Agreement, and Modifications issued after execution of this Agreement, all of which form the Contract, and are as fully a part of the Contract as if attached to this Agreement or repeated herein. The Contract represents the entire and integrated agreement between the parties hereto and supersedes prior negotiations, representations, or agreements, either written or oral. An enumeration of the Contract Documents, other than a Modification, appears in Article 9.

ARTICLE 2 THE WORK OF THIS CONTRACT

The Contractor shall fully execute the Work described in the Contract Documents, except as specifically indicated in the Contract Documents to be the responsibility of others.

ARTICLE 3 DATE OF COMMENCEMENT AND SUBSTANTIAL COMPLETION

§ 3.1 The date of commencement of the Work shall be:
(Check one of the following boxes.)

[« »] The date of this Agreement.

[« »] A date set forth in a notice to proceed issued by the Owner.

[« »] Established as follows:
(Insert a date or a means to determine the date of commencement of the Work.)

« »

If a date of commencement of the Work is not selected, then the date of commencement shall be the date of this Agreement.

§ 3.2 The Contract Time shall be measured from the date of commencement of the Work.

§ 3.3 Substantial Completion

§ 3.3.1 Subject to adjustments of the Contract Time as provided in the Contract Documents, the Contractor shall achieve Substantial Completion of the entire Work:
(Check one of the following boxes and complete the necessary information.)

AIA Document A101 – 2017. Copyright © 1915, 1918, 1925, 1937, 1951, 1958, 1961, 1963, 1967, 1974, 1977, 1987, 1991, 1997, 2007 and 2017. All rights reserved. "The American Institute of Architects," "American Institute of Architects," "AIA," the AIA Logo, and "AIA Contract Documents" are trademarks of The American Institute of Architects. This draft was produced at 14:05:32 ET on 02/16/2024 under Order No.2114457573 which expires on 07/31/2024, is not for resale, is licensed for one-time use only, and may only be used in accordance with the AIA Contract Documents® Terms of Service. To report copyright violations, e-mail docinfo@aiacontracts.com.
User Notes: (892032825)

[« »] Not later than « » (« ») calendar days from the date of commencement of the Work.

[« »] By the following date: « »

§ 3.3.2 Subject to adjustments of the Contract Time as provided in the Contract Documents, if portions of the Work are to be completed prior to Substantial Completion of the entire Work, the Contractor shall achieve Substantial Completion of such portions by the following dates:

Portion of Work	Substantial Completion Date

§ 3.3.3 If the Contractor fails to achieve Substantial Completion as provided in this Section 3.3, liquidated damages, if any, shall be assessed as set forth in Section 4.5.

ARTICLE 4 CONTRACT SUM

§ 4.1 The Owner shall pay the Contractor the Contract Sum in current funds for the Contractor's performance of the Contract. The Contract Sum shall be « » ($ « »), subject to additions and deductions as provided in the Contract Documents.

§ 4.2 Alternates

§ 4.2.1 Alternates, if any, included in the Contract Sum:

Item	Price

§ 4.2.2 Subject to the conditions noted below, the following alternates may be accepted by the Owner following execution of this Agreement. Upon acceptance, the Owner shall issue a Modification to this Agreement.
(Insert below each alternate and the conditions that must be met for the Owner to accept the alternate.)

Item	Price	Conditions for Acceptance

§ 4.3 Allowances, if any, included in the Contract Sum:
(Identify each allowance.)

Item	Price

§ 4.4 Unit prices, if any:
(Identify the item and state the unit price and quantity limitations, if any, to which the unit price will be applicable.)

Item	Units and Limitations	Price per Unit ($0.00)

§ 4.5 Liquidated damages, if any:
(Insert terms and conditions for liquidated damages, if any.)

« »

§ 4.6 Other:
(Insert provisions for bonus or other incentives, if any, that might result in a change to the Contract Sum.)

« »

AIA Document A101 – 2017. Copyright © 1915, 1918, 1925, 1937, 1951, 1958, 1961, 1963, 1967, 1974, 1977, 1987, 1991, 1997, 2007 and 2017. All rights reserved. "The American Institute of Architects," "American Institute of Architects," "AIA," the AIA Logo, and "AIA Contract Documents" are trademarks of The American Institute of Architects. This draft was produced at 14:05:32 ET on 02/16/2024 under Order No.2114457573 which expires on 07/31/2024, is not for resale, is licensed for one-time use only, and may only be used in accordance with the AIA Contract Documents® Terms of Service. To report copyright violations, e-mail docinfo@aiacontracts.com.
User Notes: (892032825)

ARTICLE 5 PAYMENTS

§ 5.1 Progress Payments

§ 5.1.1 Based upon Applications for Payment submitted to the Architect by the Contractor and Certificates for Payment issued by the Architect, the Owner shall make progress payments on account of the Contract Sum to the Contractor as provided below and elsewhere in the Contract Documents.

§ 5.1.2 The period covered by each Application for Payment shall be one calendar month ending on the last day of the month, or as follows:

« »

§ 5.1.3 Provided that an Application for Payment is received by the Architect not later than the « » day of a month, the Owner shall make payment of the amount certified to the Contractor not later than the « » day of the « » month. If an Application for Payment is received by the Architect after the application date fixed above, payment of the amount certified shall be made by the Owner not later than « » (« ») days after the Architect receives the Application for Payment.
(Federal, state or local laws may require payment within a certain period of time.)

§ 5.1.4 Each Application for Payment shall be based on the most recent schedule of values submitted by the Contractor in accordance with the Contract Documents. The schedule of values shall allocate the entire Contract Sum among the various portions of the Work. The schedule of values shall be prepared in such form, and supported by such data to substantiate its accuracy, as the Architect may require. This schedule of values shall be used as a basis for reviewing the Contractor's Applications for Payment.

§ 5.1.5 Applications for Payment shall show the percentage of completion of each portion of the Work as of the end of the period covered by the Application for Payment.

§ 5.1.6 In accordance with AIA Document A201™–2017, General Conditions of the Contract for Construction, and subject to other provisions of the Contract Documents, the amount of each progress payment shall be computed as follows:

§ 5.1.6.1 The amount of each progress payment shall first include:

- **.1** That portion of the Contract Sum properly allocable to completed Work;
- **.2** That portion of the Contract Sum properly allocable to materials and equipment delivered and suitably stored at the site for subsequent incorporation in the completed construction, or, if approved in advance by the Owner, suitably stored off the site at a location agreed upon in writing; and
- **.3** That portion of Construction Change Directives that the Architect determines, in the Architect's professional judgment, to be reasonably justified.

§ 5.1.6.2 The amount of each progress payment shall then be reduced by:

- **.1** The aggregate of any amounts previously paid by the Owner;
- **.2** The amount, if any, for Work that remains uncorrected and for which the Architect has previously withheld a Certificate for Payment as provided in Article 9 of AIA Document A201–2017;
- **.3** Any amount for which the Contractor does not intend to pay a Subcontractor or material supplier, unless the Work has been performed by others the Contractor intends to pay;
- **.4** For Work performed or defects discovered since the last payment application, any amount for which the Architect may withhold payment, or nullify a Certificate of Payment in whole or in part, as provided in Article 9 of AIA Document A201–2017; and
- **.5** Retainage withheld pursuant to Section 5.1.7.

§ 5.1.7 Retainage

§ 5.1.7.1 For each progress payment made prior to Substantial Completion of the Work, the Owner may withhold the following amount, as retainage, from the payment otherwise due:
(Insert a percentage or amount to be withheld as retainage from each Application for Payment. The amount of retainage may be limited by governing law.)

« »

AIA Document A101 – 2017. Copyright © 1915, 1918, 1925, 1937, 1951, 1958, 1961, 1963, 1967, 1974, 1977, 1987, 1991, 1997, 2007 and 2017. All rights reserved. "The American Institute of Architects," "American Institute of Architects," "AIA," the AIA Logo, and "AIA Contract Documents" are trademarks of The American Institute of Architects. This draft was produced at 14:05:32 ET on 02/16/2024 under Order No.2114457573 which expires on 07/31/2024, is not for resale, is licensed for one-time use only, and may only be used in accordance with the AIA Contract Documents® Terms of Service. To report copyright violations, e-mail docinfo@aiacontracts.com.
User Notes: (892032825)

§ 5.1.7.1.1 The following items are not subject to retainage:
(Insert any items not subject to the withholding of retainage, such as general conditions, insurance, etc.)

« »

§ 5.1.7.2 Reduction or limitation of retainage, if any, shall be as follows:
(If the retainage established in Section 5.1.7.1 is to be modified prior to Substantial Completion of the entire Work, including modifications for Substantial Completion of portions of the Work as provided in Section 3.3.2, insert provisions for such modifications.)

« »

§ 5.1.7.3 Except as set forth in this Section 5.1.7.3, upon Substantial Completion of the Work, the Contractor may submit an Application for Payment that includes the retainage withheld from prior Applications for Payment pursuant to this Section 5.1.7. The Application for Payment submitted at Substantial Completion shall not include retainage as follows:
(Insert any other conditions for release of retainage upon Substantial Completion.)

« »

§ 5.1.8 If final completion of the Work is materially delayed through no fault of the Contractor, the Owner shall pay the Contractor any additional amounts in accordance with Article 9 of AIA Document A201–2017.

§ 5.1.9 Except with the Owner's prior approval, the Contractor shall not make advance payments to suppliers for materials or equipment which have not been delivered and stored at the site.

§ 5.2 Final Payment

§ 5.2.1 Final payment, constituting the entire unpaid balance of the Contract Sum, shall be made by the Owner to the Contractor when

.1 the Contractor has fully performed the Contract except for the Contractor's responsibility to correct Work as provided in Article 12 of AIA Document A201–2017, and to satisfy other requirements, if any, which extend beyond final payment; and

.2 a final Certificate for Payment has been issued by the Architect.

§ 5.2.2 The Owner's final payment to the Contractor shall be made no later than 30 days after the issuance of the Architect's final Certificate for Payment, or as follows:

« »

§ 5.3 Interest

Payments due and unpaid under the Contract shall bear interest from the date payment is due at the rate stated below, or in the absence thereof, at the legal rate prevailing from time to time at the place where the Project is located.
(Insert rate of interest agreed upon, if any.)

« » % « »

ARTICLE 6 DISPUTE RESOLUTION

§ 6.1 Initial Decision Maker

The Architect will serve as the Initial Decision Maker pursuant to Article 15 of AIA Document A201–2017, unless the parties appoint below another individual, not a party to this Agreement, to serve as the Initial Decision Maker.
(If the parties mutually agree, insert the name, address and other contact information of the Initial Decision Maker, if other than the Architect.)

« »
« »
« »

AIA Document A101 – 2017. Copyright © 1915, 1918, 1925, 1937, 1951, 1958, 1961, 1963, 1967, 1974, 1977, 1987, 1991, 1997, 2007 and 2017. All rights reserved. "The American Institute of Architects," "American Institute of Architects," "AIA," the AIA Logo, and "AIA Contract Documents" are trademarks of The American Institute of Architects. This draft was produced at 14:05:32 ET on 02/16/2024 under Order No.2114457573 which expires on 07/31/2024, is not for resale, is licensed for one-time use only, and may only be used in accordance with the AIA Contract Documents® Terms of Service. To report copyright violations, e-mail docinfo@aiacontracts.com.
User Notes: (892032825)

« »

§ 6.2 Binding Dispute Resolution

For any Claim subject to, but not resolved by, mediation pursuant to Article 15 of AIA Document A201–2017, the method of binding dispute resolution shall be as follows:
(Check the appropriate box.)

[« »] Arbitration pursuant to Section 15.4 of AIA Document A201–2017

[« »] Litigation in a court of competent jurisdiction

[« »] Other *(Specify)*

« »

If the Owner and Contractor do not select a method of binding dispute resolution, or do not subsequently agree in writing to a binding dispute resolution method other than litigation, Claims will be resolved by litigation in a court of competent jurisdiction.

ARTICLE 7 TERMINATION OR SUSPENSION

§ 7.1 The Contract may be terminated by the Owner or the Contractor as provided in Article 14 of AIA Document A201–2017.

§ 7.1.1 If the Contract is terminated for the Owner's convenience in accordance with Article 14 of AIA Document A201–2017, then the Owner shall pay the Contractor a termination fee as follows:
(Insert the amount of, or method for determining, the fee, if any, payable to the Contractor following a termination for the Owner's convenience.)

« »

§ 7.2 The Work may be suspended by the Owner as provided in Article 14 of AIA Document A201–2017.

ARTICLE 8 MISCELLANEOUS PROVISIONS

§ 8.1 Where reference is made in this Agreement to a provision of AIA Document A201–2017 or another Contract Document, the reference refers to that provision as amended or supplemented by other provisions of the Contract Documents.

§ 8.2 The Owner's representative:
(Name, address, email address, and other information)

« »
« »
« »
« »
« »
« »

§ 8.3 The Contractor's representative:
(Name, address, email address, and other information)

« »
« »
« »
« »
« »
« »

AIA Document A101 – 2017. Copyright © 1915, 1918, 1925, 1937, 1951, 1958, 1961, 1963, 1967, 1974, 1977, 1987, 1991, 1997, 2007 and 2017. All rights reserved. "The American Institute of Architects," "American Institute of Architects," "AIA," the AIA Logo, and "AIA Contract Documents" are trademarks of The American Institute of Architects. This draft was produced at 14:05:32 ET on 02/16/2024 under Order No.2114457573 which expires on 07/31/2024, is not for resale, is licensed for one-time use only, and may only be used in accordance with the AIA Contract Documents® Terms of Service. To report copyright violations, e-mail docinfo@aiacontracts.com.
User Notes: (892032825)

§ 8.4 Neither the Owner's nor the Contractor's representative shall be changed without ten days' prior notice to the other party.

§ 8.5 Insurance and Bonds

§ 8.5.1 The Owner and the Contractor shall purchase and maintain insurance as set forth in AIA Document A101™–2017, Standard Form of Agreement Between Owner and Contractor where the basis of payment is a Stipulated Sum, Exhibit A, Insurance and Bonds, and elsewhere in the Contract Documents.

§ 8.5.2 The Contractor shall provide bonds as set forth in AIA Document A101™–2017 Exhibit A, and elsewhere in the Contract Documents.

§ 8.6 Notice in electronic format, pursuant to Article 1 of AIA Document A201–2017, may be given in accordance with AIA Document E203™–2013, Building Information Modeling and Digital Data Exhibit, if completed, or as otherwise set forth below:
(If other than in accordance with AIA Document E203–2013, insert requirements for delivering notice in electronic format such as name, title, and email address of the recipient and whether and how the system will be required to generate a read receipt for the transmission.)

« »

§ 8.7 Other provisions:

« »

ARTICLE 9 ENUMERATION OF CONTRACT DOCUMENTS

§ 9.1 This Agreement is comprised of the following documents:

.1 AIA Document A101™–2017, Standard Form of Agreement Between Owner and Contractor

.2 AIA Document A101™–2017, Exhibit A, Insurance and Bonds

.3 AIA Document A201™–2017, General Conditions of the Contract for Construction

.4 AIA Document E203™–2013, Building Information Modeling and Digital Data Exhibit, dated as indicated below:
(Insert the date of the E203-2013 incorporated into this Agreement.)

« »

.5 Drawings

Number	Title	Date

.6 Specifications

Section	Title	Date	Pages

.7 Addenda, if any:

Number	Date	Pages

Portions of Addenda relating to bidding or proposal requirements are not part of the Contract Documents unless the bidding or proposal requirements are also enumerated in this Article 9.

.8 Other Exhibits:
(Check all boxes that apply and include appropriate information identifying the exhibit where required.)

AIA Document A101 – 2017. Copyright © 1915, 1918, 1925, 1937, 1951, 1958, 1961, 1963, 1967, 1974, 1977, 1987, 1991, 1997, 2007 and 2017. All rights reserved. "The American Institute of Architects," "American Institute of Architects," "AIA," the AIA Logo, and "AIA Contract Documents" are trademarks of The American Institute of Architects. This draft was produced at 14:05:32 ET on 02/16/2024 under Order No.2114457573 which expires on 07/31/2024, is not for resale, is licensed for one-time use only, and may only be used in accordance with the AIA Contract Documents® Terms of Service. To report copyright violations, e-mail docinfo@aiacontracts.com.
User Notes: (892032825)

[« »] AIA Document E204™–2017, Sustainable Projects Exhibit, dated as indicated below:
(Insert the date of the E204-2017 incorporated into this Agreement.)

« »

[« »] The Sustainability Plan:

Title	Date	Pages

[« »] Supplementary and other Conditions of the Contract:

Document	Title	Date	Pages

.9 Other documents, if any, listed below:
(List here any additional documents that are intended to form part of the Contract Documents. AIA Document A201™–2017 provides that the advertisement or invitation to bid, Instructions to Bidders, sample forms, the Contractor's bid or proposal, portions of Addenda relating to bidding or proposal requirements, and other information furnished by the Owner in anticipation of receiving bids or proposals, are not part of the Contract Documents unless enumerated in this Agreement. Any such documents should be listed here only if intended to be part of the Contract Documents.)

« »

This Agreement entered into as of the day and year first written above.

OWNER *(Signature)*	**CONTRACTOR** *(Signature)*
« »« »	« »« »
(Printed name and title)	*(Printed name and title)*

AIA Document A101 – 2017. Copyright © 1915, 1918, 1925, 1937, 1951, 1958, 1961, 1963, 1967, 1974, 1977, 1987, 1991, 1997, 2007 and 2017. All rights reserved. "The American Institute of Architects," "American Institute of Architects," "AIA," the AIA Logo, and "AIA Contract Documents" are trademarks of The American Institute of Architects. This draft was produced at 14:05:32 ET on 02/16/2024 under Order No.2114457573 which expires on 07/31/2024, is not for resale, is licensed for one-time use only, and may only be used in accordance with the AIA Contract Documents® Terms of Service. To report copyright violations, e-mail docinfo@aiacontracts.com.
User Notes: (892032825)

DRAFT

AIA® Document A201® – 2017

General Conditions of the Contract for Construction

for the following PROJECT:
(Name and location or address)

« »
« »

THE OWNER:
(Name, legal status and address)

« »« »
« »

THE ARCHITECT:
(Name, legal status and address)

« »« »
« »

TABLE OF ARTICLES

1 GENERAL PROVISIONS

2 OWNER

3 CONTRACTOR

4 ARCHITECT

5 SUBCONTRACTORS

6 CONSTRUCTION BY OWNER OR BY SEPARATE CONTRACTORS

7 CHANGES IN THE WORK

8 TIME

9 PAYMENTS AND COMPLETION

10 PROTECTION OF PERSONS AND PROPERTY

11 INSURANCE AND BONDS

12 UNCOVERING AND CORRECTION OF WORK

13 MISCELLANEOUS PROVISIONS

14 TERMINATION OR SUSPENSION OF THE CONTRACT

15 CLAIMS AND DISPUTES

ADDITIONS AND DELETIONS: The author of this document has added information needed for its completion. The author may also have revised the text of the original AIA standard form. An *Additions and Deletions Report* that notes added information as well as revisions to the standard form text is available from the author and should be reviewed.

This document has important legal consequences. Consultation with an attorney is encouraged with respect to its completion or modification.

For guidance in modifying this document to include supplementary conditions, see AIA Document A503™, Guide for Supplementary Conditions.

ELECTRONIC COPYING of any portion of this AIA® Document to another electronic file is prohibited and constitutes a violation of copyright laws as set forth in the footer of this document.

AIA Document A201 – 2017. Copyright © 1911, 1915, 1918, 1925, 1937, 1951, 1958, 1961, 1963, 1966, 1970, 1976, 1987, 1997, 2007 and 2017. All rights reserved. "The American Institute of Architects," "American Institute of Architects," "AIA," the AIA Logo, and "AIA Contract Documents" are trademarks of The American Institute of Architects. This draft was produced at 14:06:49 ET on 02/16/2024 under Order No.2114457573 which expires on 07/31/2024, is not for resale, is licensed for one-time use only, and may only be used in accordance with the AIA Contract Documents® Terms of Service. To report copyright violations, e-mail docinfo@aiacontracts.com.
User Notes: (1632597836)

INDEX
(Topics and numbers in bold are Section headings.)

Acceptance of Nonconforming Work
9.6.6, 9.9.3, **12.3**
Acceptance of Work
9.6.6, 9.8.2, 9.9.3, 9.10.1, 9.10.3, 12.3
Access to Work
3.16, 6.2.1, 12.1
Accident Prevention
10
Acts and Omissions
3.2, 3.3.2, 3.12.8, 3.18, 4.2.3, 8.3.1, 9.5.1, 10.2.5, 10.2.8, 13.3.2, 14.1, 15.1.2, 15.2
Addenda
1.1.1
Additional Costs, Claims for
3.7.4, 3.7.5, 10.3.2, 15.1.5
Additional Inspections and Testing
9.4.2, 9.8.3, 12.2.1, **13.4**
Additional Time, Claims for
3.2.4, 3.7.4, 3.7.5, 3.10.2, 8.3.2, **15.1.6**
Administration of the Contract
3.1.3, **4.2**, 9.4, 9.5
Advertisement or Invitation to Bid
1.1.1
Aesthetic Effect
4.2.13
Allowances
3.8
Applications for Payment
4.2.5, 7.3.9, 9.2, **9.3**, 9.4, 9.5.1, 9.5.4, 9.6.3, 9.7, 9.10
Approvals
2.1.1, 2.3.1, 2.5, 3.1.3, 3.10.2, 3.12.8, 3.12.9, 3.12.10.1, 4.2.7, 9.3.2, 13.4.1
Arbitration
8.3.1, 15.3.2, **15.4**
ARCHITECT
4
Architect, Definition of
4.1.1
Architect, Extent of Authority
2.5, 3.12.7, 4.1.2, 4.2, 5.2, 6.3, 7.1.2, 7.3.4, 7.4, 9.2, 9.3.1, 9.4, 9.5, 9.6.3, 9.8, 9.10.1, 9.10.3, 12.1, 12.2.1, 13.4.1, 13.4.2, 14.2.2, 14.2.4, 15.1.4, 15.2.1
Architect, Limitations of Authority and Responsibility
2.1.1, 3.12.4, 3.12.8, 3.12.10, 4.1.2, 4.2.1, 4.2.2, 4.2.3, 4.2.6, 4.2.7, 4.2.10, 4.2.12, 4.2.13, 5.2.1, 7.4, 9.4.2, 9.5.4, 9.6.4, 15.1.4, 15.2
Architect's Additional Services and Expenses
2.5, 12.2.1, 13.4.2, 13.4.3, 14.2.4
Architect's Administration of the Contract
3.1.3, 3.7.4, 15.2, 9.4.1, 9.5
Architect's Approvals
2.5, 3.1.3, 3.5, 3.10.2, 4.2.7
Architect's Authority to Reject Work
3.5, 4.2.6, 12.1.2, 12.2.1
Architect's Copyright
1.1.7, 1.5
Architect's Decisions
3.7.4, 4.2.6, 4.2.7, 4.2.11, 4.2.12, 4.2.13, 4.2.14, 6.3, 7.3.4, 7.3.9, 8.1.3, 8.3.1, 9.2, 9.4.1, 9.5, 9.8.4, 9.9.1, 13.4.2, 15.2
Architect's Inspections
3.7.4, 4.2.2, 4.2.9, 9.4.2, 9.8.3, 9.9.2, 9.10.1, 13.4
Architect's Instructions
3.2.4, 3.3.1, 4.2.6, 4.2.7, 13.4.2
Architect's Interpretations
4.2.11, 4.2.12
Architect's Project Representative
4.2.10
Architect's Relationship with Contractor
1.1.2, 1.5, 2.3.3, 3.1.3, 3.2.2, 3.2.3, 3.2.4, 3.3.1, 3.4.2, 3.5, 3.7.4, 3.7.5, 3.9.2, 3.9.3, 3.10, 3.11, 3.12, 3.16, 3.18, 4.1.2, 4.2, 5.2, 6.2.2, 7, 8.3.1, 9.2, 9.3, 9.4, 9.5, 9.7, 9.8, 9.9, 10.2.6, 10.3, 11.3, 12, 13.3.2, 13.4, 15.2
Architect's Relationship with Subcontractors
1.1.2, 4.2.3, 4.2.4, 4.2.6, 9.6.3, 9.6.4, 11.3
Architect's Representations
9.4.2, 9.5.1, 9.10.1
Architect's Site Visits
3.7.4, 4.2.2, 4.2.9, 9.4.2, 9.5.1, 9.9.2, 9.10.1, 13.4
Asbestos
10.3.1
Attorneys' Fees
3.18.1, 9.6.8, 9.10.2, 10.3.3
Award of Separate Contracts
6.1.1, 6.1.2
Award of Subcontracts and Other Contracts for Portions of the Work
5.2
Basic Definitions
1.1
Bidding Requirements
1.1.1
Binding Dispute Resolution
8.3.1, 9.7, 11.5, 13.1, 15.1.2, 15.1.3, 15.2.1, 15.2.5, 15.2.6.1, 15.3.1, 15.3.2, 15.3.3, 15.4.1
Bonds, Lien
7.3.4.4, 9.6.8, 9.10.2, 9.10.3
Bonds, Performance, and Payment
7.3.4.4, 9.6.7, 9.10.3, **11.1.2**, 11.1.3, **11.5**
Building Information Models Use and Reliance
1.8
Building Permit
3.7.1
Capitalization
1.3
Certificate of Substantial Completion
9.8.3, 9.8.4, 9.8.5

AIA Document A201 – 2017. Copyright © 1911, 1915, 1918, 1925, 1937, 1951, 1958, 1961, 1963, 1966, 1970, 1976, 1987, 1997, 2007 and 2017. All rights reserved. "The American Institute of Architects," "American Institute of Architects," "AIA," the AIA Logo, and "AIA Contract Documents" are trademarks of The American Institute of Architects. This draft was produced at 14:06:49 ET on 02/16/2024 under Order No.2114457573 which expires on 07/31/2024, is not for resale, is licensed for one-time use only, and may only be used in accordance with the AIA Contract Documents® Terms of Service. To report copyright violations, e-mail docinfo@aiacontracts.com.
User Notes: (1632597836)

Certificates for Payment
4.2.1, 4.2.5, 4.2.9, 9.3.3, **9.4**, 9.5, 9.6.1, 9.6.6, 9.7, 9.10.1, 9.10.3, 14.1.1.3, 14.2.4, 15.1.4
Certificates of Inspection, Testing or Approval
13.4.4
Certificates of Insurance
9.10.2
Change Orders
1.1.1, 3.4.2, 3.7.4, 3.8.2.3, 3.11, 3.12.8, 4.2.8, 5.2.3, 7.1.2, 7.1.3, **7.2**, 7.3.2, 7.3.7, 7.3.9, 7.3.10, 8.3.1, 9.3.1.1, 9.10.3, 10.3.2, 11.2, 11.5, 12.1.2
Change Orders, Definition of
7.2.1
CHANGES IN THE WORK
2.2.2, 3.11, 4.2.8, **7**, 7.2.1, 7.3.1, 7.4, 8.3.1, 9.3.1.1, 11.5
Claims, Definition of
15.1.1
Claims, Notice of
1.6.2, 15.1.3
CLAIMS AND DISPUTES
3.2.4, 6.1.1, 6.3, 7.3.9, 9.3.3, 9.10.4, 10.3.3, **15**, 15.4
Claims and Timely Assertion of Claims
15.4.1
Claims for Additional Cost
3.2.4, 3.3.1, 3.7.4, 7.3.9, 9.5.2, 10.2.5, 10.3.2, **15.1.5**
Claims for Additional Time
3.2.4, 3.3.1, 3.7.4, 6.1.1, 8.3.2, 9.5.2, 10.3.2, **15.1.6**
Concealed or Unknown Conditions, Claims for
3.7.4
Claims for Damages
3.2.4, 3.18, 8.3.3, 9.5.1, 9.6.7, 10.2.5, 10.3.3, 11.3, 11.3.2, 14.2.4, 15.1.7
Claims Subject to Arbitration
15.4.1
Cleaning Up
3.15, 6.3
Commencement of the Work, Conditions Relating to
2.2.1, 3.2.2, 3.4.1, 3.7.1, 3.10.1, 3.12.6, 5.2.1, 5.2.3, 6.2.2, 8.1.2, 8.2.2, 8.3.1, 11.1, 11.2, **15.1.5**
Commencement of the Work, Definition of
8.1.2
Communications
3.9.1, **4.2.4**
Completion, Conditions Relating to
3.4.1, 3.11, 3.15, 4.2.2, 4.2.9, 8.2, 9.4.2, 9.8, 9.9.1, 9.10, 12.2, 14.1.2, 15.1.2
COMPLETION, PAYMENTS AND
9
Completion, Substantial
3.10.1, 4.2.9, 8.1.1, 8.1.3, 8.2.3, 9.4.2, 9.8, 9.9.1, 9.10.3, 12.2, 15.1.2
Compliance with Laws
2.3.2, 3.2.3, 3.6, 3.7, 3.12.10, 3.13, 9.6.4, 10.2.2, 13.1, 13.3, 13.4.1, 13.4.2, 13.5, 14.1.1, 14.2.1.3, 15.2.8, 15.4.2, 15.4.3
Concealed or Unknown Conditions
3.7.4, 4.2.8, 8.3.1, 10.3
Conditions of the Contract
1.1.1, 6.1.1, 6.1.4
Consent, Written
3.4.2, 3.14.2, 4.1.2, 9.8.5, 9.9.1, 9.10.2, 9.10.3, 13.2, 15.4.4.2
Consolidation or Joinder
15.4.4
CONSTRUCTION BY OWNER OR BY
SEPARATE CONTRACTORS
1.1.4, **6**
Construction Change Directive, Definition of
7.3.1
Construction Change Directives
1.1.1, 3.4.2, 3.11, 3.12.8, 4.2.8, 7.1.1, 7.1.2, 7.1.3, **7.3**, 9.3.1.1
Construction Schedules, Contractor's
3.10, 3.11, 3.12.1, 3.12.2, 6.1.3, 15.1.6.2
Contingent Assignment of Subcontracts
5.4, 14.2.2.2
Continuing Contract Performance
15.1.4
Contract, Definition of
1.1.2
CONTRACT, TERMINATION OR
SUSPENSION OF THE
5.4.1.1, 5.4.2, 11.5, **14**
Contract Administration
3.1.3, 4, 9.4, 9.5
Contract Award and Execution, Conditions Relating to
3.7.1, 3.10, 5.2, 6.1
Contract Documents, Copies Furnished and Use of
1.5.2, 2.3.6, 5.3
Contract Documents, Definition of
1.1.1
Contract Sum
2.2.2, 2.2.4, 3.7.4, 3.7.5, 3.8, 3.10.2, 5.2.3, 7.3, 7.4, **9.1**, 9.2, 9.4.2, 9.5.1.4, 9.6.7, 9.7, 10.3.2, 11.5, 12.1.2, 12.3, 14.2.4, 14.3.2, 15.1.4.2, **15.1.5, 15.2.5**
Contract Sum, Definition of
9.1
Contract Time
1.1.4, 2.2.1, 2.2.2, 3.7.4, 3.7.5, 3.10.2, 5.2.3, 6.1.5, 7.2.1.3, 7.3.1, 7.3.5, 7.3.6, 7, 7, 7.3.10, 7.4, 8.1.1, 8.2.1, 8.2.3, 8.3.1, 9.5.1, 9.7, 10.3.2, 12.1.1, 12.1.2, 14.3.2, 15.1.4.2, 15.1.6.1, 15.2.5
Contract Time, Definition of
8.1.1
CONTRACTOR
3
Contractor, Definition of
3.1, 6.1.2
Contractor's Construction and Submittal
Schedules
3.10, 3.12.1, 3.12.2, 4.2.3, 6.1.3, 15.1.6.2

AIA Document A201 – 2017. Copyright © 1911, 1915, 1918, 1925, 1937, 1951, 1958, 1961, 1963, 1966, 1970, 1976, 1987, 1997, 2007 and 2017. All rights reserved. "The American Institute of Architects," "American Institute of Architects," "AIA," the AIA Logo, and "AIA Contract Documents" are trademarks of The American Institute of Architects. This draft was produced at 14:06:49 ET on 02/16/2024 under Order No.2114457573 which expires on 07/31/2024, is not for resale, is licensed for one-time use only, and may only be used in accordance with the AIA Contract Documents® Terms of Service. To report copyright violations, e-mail docinfo@aiacontracts.com.
User Notes: (1632597836)

Contractor's Employees
2.2.4, 3.3.2, 3.4.3, 3.8.1, 3.9, 3.18.2, 4.2.3, 4.2.6, 10.2, 10.3, 11.3, 14.1, 14.2.1.1
Contractor's Liability Insurance
11.1
Contractor's Relationship with Separate Contractors and Owner's Forces
3.12.5, 3.14.2, 4.2.4, 6, 11.3, 12.2.4
Contractor's Relationship with Subcontractors
1.2.2, 2.2.4, 3.3.2, 3.18.1, 3.18.2, 4.2.4, 5, 9.6.2, 9.6.7, 9.10.2, 11.2, 11.3, 11.4
Contractor's Relationship with the Architect
1.1.2, 1.5, 2.3.3, 3.1.3, 3.2.2, 3.2.3, 3.2.4, 3.3.1, 3.4.2, 3.5.1, 3.7.4, 3.10, 3.11, 3.12, 3.16, 3.18, 4.2, 5.2, 6.2.2, 7, 8.3.1, 9.2, 9.3, 9.4, 9.5, 9.7, 9.8, 9.9, 10.2.6, 10.3, 11.3, 12, 13.4, 15.1.3, 15.2.1
Contractor's Representations
3.2.1, 3.2.2, 3.5, 3.12.6, 6.2.2, 8.2.1, 9.3.3, 9.8.2
Contractor's Responsibility for Those Performing the Work
3.3.2, 3.18, 5.3, 6.1.3, 6.2, 9.5.1, 10.2.8
Contractor's Review of Contract Documents
3.2
Contractor's Right to Stop the Work
2.2.2, 9.7
Contractor's Right to Terminate the Contract
14.1
Contractor's Submittals
3.10, 3.11, 3.12, 4.2.7, 5.2.1, 5.2.3, 9.2, 9.3, 9.8.2, 9.8.3, 9.9.1, 9.10.2, 9.10.3
Contractor's Superintendent
3.9, 10.2.6
Contractor's Supervision and Construction Procedures
1.2.2, 3.3, 3.4, 3.12.10, 4.2.2, 4.2.7, 6.1.3, 6.2.4, 7.1.3, 7.3.4, 7.3.6, 8.2, 10, 12, 14, 15.1.4
Coordination and Correlation
1.2, 3.2.1, 3.3.1, 3.10, 3.12.6, 6.1.3, 6.2.1
Copies Furnished of Drawings and Specifications
1.5, 2.3.6, 3.11
Copyrights
1.5, **3.17**
Correction of Work
2.5, 3.7.3, 9.4.2, 9.8.2, 9.8.3, 9.9.1, 12.1.2, **12.2**, 12.3, 15.1.3.1, 15.1.3.2, 15.2.1
Correlation and Intent of the Contract Documents
1.2
Cost, Definition of
7.3.4
Costs
2.5, 3.2.4, 3.7.3, 3.8.2, 3.15.2, 5.4.2, 6.1.1, 6.2.3, 7.3.3.3, 7.3.4, 7.3.8, 7.3.9, 9.10.2, 10.3.2, 10.3.6, 11.2, 12.1.2, 12.2.1, 12.2.4, 13.4, 14
Cutting and Patching
3.14, 6.2.5
Damage to Construction of Owner or Separate Contractors
3.14.2, 6.2.4, 10.2.1.2, 10.2.5, 10.4, 12.2.4
Damage to the Work
3.14.2, 9.9.1, 10.2.1.2, 10.2.5, 10.4, 12.2.4
Damages, Claims for
3.2.4, 3.18, 6.1.1, 8.3.3, 9.5.1, 9.6.7, 10.3.3, 11.3.2, 11.3, 14.2.4, 15.1.7
Damages for Delay
6.2.3, 8.3.3, 9.5.1.6, 9.7, 10.3.2, 14.3.2
Date of Commencement of the Work, Definition of
8.1.2
Date of Substantial Completion, Definition of
8.1.3
Day, Definition of
8.1.4
Decisions of the Architect
3.7.4, 4.2.6, 4.2.7, 4.2.11, 4.2.12, 4.2.13, 6.3, 7.3.4, 7.3.9, 8.1.3, 8.3.1, 9.2, 9.4, 9.5.1, 9.8.4, 9.9.1, 13.4.2, 14.2.2, 14.2.4, 15.1, 15.2
Decisions to Withhold Certification
9.4.1, **9.5**, 9.7, 14.1.1.3
Defective or Nonconforming Work, Acceptance, Rejection and Correction of
2.5, 3.5, 4.2.6, 6.2.3, 9.5.1, 9.5.3, 9.6.6, 9.8.2, 9.9.3, 9.10.4, 12.2.1
Definitions
1.1, 2.1.1, 3.1.1, 3.5, 3.12.1, 3.12.2, 3.12.3, 4.1.1, 5.1, 6.1.2, 7.2.1, 7.3.1, 8.1, 9.1, 9.8.1, 15.1.1
Delays and Extensions of Time
3.2, **3.7.4**, 5.2.3, 7.2.1, 7.3.1, **7.4**, **8.3**, 9.5.1, **9.7**, 10.3.2, **10.4**, 14.3.2, **15.1.6**, 15.2.5
Digital Data Use and Transmission
1.7
Disputes
6.3, 7.3.9, 15.1, 15.2
Documents and Samples at the Site
3.11
Drawings, Definition of
1.1.5
Drawings and Specifications, Use and Ownership of
3.11
Effective Date of Insurance
8.2.2
Emergencies
10.4, 14.1.1.2, **15.1.5**
Employees, Contractor's
3.3.2, 3.4.3, 3.8.1, 3.9, 3.18.2, 4.2.3, 4.2.6, 10.2, 10.3.3, 11.3, 14.1, 14.2.1.1
Equipment, Labor, or Materials
1.1.3, 1.1.6, 3.4, 3.5, 3.8.2, 3.8.3, 3.12, 3.13, 3.15.1, 4.2.6, 4.2.7, 5.2.1, 6.2.1, 7.3.4, 9.3.2, 9.3.3, 9.5.1.3, 9.10.2, 10.2.1, 10.2.4, 14.2.1.1, 14.2.1.2
Execution and Progress of the Work
1.1.3, 1.2.1, 1.2.2, 2.3.4, 2.3.6, 3.1, 3.3.1, 3.4.1, 3.7.1, 3.10.1, 3.12, 3.14, 4.2, 6.2.2, 7.1.3, 7.3.6, 8.2, 9.5.1, 9.9.1, 10.2, 10.3, 12.1, 12.2, 14.2, 14.3.1, 15.1.4

AIA Document A201 – 2017. Copyright © 1911, 1915, 1918, 1925, 1937, 1951, 1958, 1961, 1963, 1966, 1970, 1976, 1987, 1997, 2007 and 2017. All rights reserved. "The American Institute of Architects," "American Institute of Architects," "AIA," the AIA Logo, and "AIA Contract Documents" are trademarks of The American Institute of Architects. This draft was produced at 14:06:49 ET on 02/16/2024 under Order No.2114457573 which expires on 07/31/2024, is not for resale, is licensed for one-time use only, and may only be used in accordance with the AIA Contract Documents® Terms of Service. To report copyright violations, e-mail docinfo@aiacontracts.com.
User Notes: (1632597836)

Extensions of Time
3.2.4, 3.7.4, 5.2.3, 7.2.1, 7.3, 7.4, 9.5.1, 9.7, 10.3.2, 10.4, 14.3, 15.1.6, **15.2.5**
Failure of Payment
9.5.1.3, **9.7**, 9.10.2, 13.5, 14.1.1.3, 14.2.1.2
Faulty Work
(See Defective or Nonconforming Work)
Final Completion and Final Payment
4.2.1, 4.2.9, 9.8.2, **9.10**, 12.3, 14.2.4, 14.4.3
Financial Arrangements, Owner's
2.2.1, 13.2.2, 14.1.1.4
GENERAL PROVISIONS
1
Governing Law
13.1
Guarantees (See Warranty)
Hazardous Materials and Substances
10.2.4, **10.3**
Identification of Subcontractors and Suppliers
5.2.1
Indemnification
3.17, **3.18**, 9.6.8, 9.10.2, 10.3.3, 11.3
Information and Services Required of the Owner
2.1.2, **2.2**, 2.3, 3.2.2, 3.12.10.1, 6.1.3, 6.1.4, 6.2.5, 9.6.1, 9.9.2, 9.10.3, 10.3.3, 11.2, 13.4.1, 13.4.2, 14.1.1.4, 14.1.4, 15.1.4
Initial Decision
15.2
Initial Decision Maker, Definition of
1.1.8
Initial Decision Maker, Decisions
14.2.4, 15.1.4.2, 15.2.1, 15.2.2, 15.2.3, 15.2.4, 15.2.5
Initial Decision Maker, Extent of Authority
14.2.4, 15.1.4.2, 15.2.1, 15.2.2, 15.2.3, 15.2.4, 15.2.5
Injury or Damage to Person or Property
10.2.8, 10.4
Inspections
3.1.3, 3.3.3, 3.7.1, 4.2.2, 4.2.6, 4.2.9, 9.4.2, 9.8.3, 9.9.2, 9.10.1, 12.2.1, 13.4
Instructions to Bidders
1.1.1
Instructions to the Contractor
3.2.4, 3.3.1, 3.8.1, 5.2.1, 7, 8.2.2, 12, 13.4.2
Instruments of Service, Definition of
1.1.7
Insurance
6.1.1, 7.3.4, 8.2.2, 9.3.2, 9.8.4, 9.9.1, 9.10.2, 10.2.5, **11**
Insurance, Notice of Cancellation or Expiration
11.1.4, 11.2.3
Insurance, Contractor's Liability
11.1
Insurance, Effective Date of
8.2.2, 14.4.2
Insurance, Owner's Liability
11.2
Insurance, Property
10.2.5, 11.2, 11.4, 11.5
Insurance, Stored Materials
9.3.2
INSURANCE AND BONDS
11
Insurance Companies, Consent to Partial Occupancy
9.9.1
Insured loss, Adjustment and Settlement of
11.5
Intent of the Contract Documents
1.2.1, 4.2.7, 4.2.12, 4.2.13
Interest
13.5
Interpretation
1.1.8, 1.2.3, **1.4**, 4.1.1, 5.1, 6.1.2, 15.1.1
Interpretations, Written
4.2.11, 4.2.12
Judgment on Final Award
15.4.2
Labor and Materials, Equipment
1.1.3, 1.1.6, **3.4**, 3.5, 3.8.2, 3.8.3, 3.12, 3.13, 3.15.1, 5.2.1, 6.2.1, 7.3.4, 9.3.2, 9.3.3, 9.5.1.3, 9.10.2, 10.2.1, 10.2.4, 14.2.1.1, 14.2.1.2
Labor Disputes
8.3.1
Laws and Regulations
1.5, 2.3.2, 3.2.3, 3.2.4, 3.6, 3.7, 3.12.10, 3.13, 9.6.4, 9.9.1, 10.2.2, 13.1, 13.3.1, 13.4.2, 13.5, 14, 15.2.8, 15.4
Liens
2.1.2, 9.3.1, 9.3.3, 9.6.8, 9.10.2, 9.10.4, 15.2.8
Limitations, Statutes of
12.2.5, 15.1.2, 15.4.1.1
Limitations of Liability
3.2.2, 3.5, 3.12.10, 3.12.10.1, 3.17, 3.18.1, 4.2.6, 4.2.7, 6.2.2, 9.4.2, 9.6.4, 9.6.7, 9.6.8, 10.2.5, 10.3.3, 11.3, 12.2.5, 13.3.1
Limitations of Time
2.1.2, 2.2, 2.5, 3.2.2, 3.10, 3.11, 3.12.5, 3.15.1, 4.2.7, 5.2, 5.3, 5.4.1, 6.2.4, 7.3, 7.4, 8.2, 9.2, 9.3.1, 9.3.3, 9.4.1, 9.5, 9.6, 9.7, 9.8, 9.9, 9.10, 12.2, 13.4, 14, 15, 15.1.2, 15.1.3, 15.1.5
Materials, Hazardous
10.2.4, **10.3**
Materials, Labor, Equipment and
1.1.3, 1.1.6, 3.4.1, 3.5, 3.8.2, 3.8.3, 3.12, 3.13, 3.15.1, 5.2.1, 6.2.1, 7.3.4, 9.3.2, 9.3.3, 9.5.1.3, 9.10.2, 10.2.1.2, 10.2.4, 14.2.1.1, 14.2.1.2
Means, Methods, Techniques, Sequences and Procedures of Construction
3.3.1, 3.12.10, 4.2.2, 4.2.7, 9.4.2
Mechanic's Lien
2.1.2, 9.3.1, 9.3.3, 9.6.8, 9.10.2, 9.10.4, 15.2.8
Mediation
8.3.1, 15.1.3.2, 15.2.1, 15.2.5, 15.2.6, **15.3**, 15.4.1, 15.4.1.1

AIA Document A201 – 2017. Copyright © 1911, 1915, 1918, 1925, 1937, 1951, 1958, 1961, 1963, 1966, 1970, 1976, 1987, 1997, 2007 and 2017. All rights reserved. "The American Institute of Architects," "American Institute of Architects," "AIA," the AIA Logo, and "AIA Contract Documents" are trademarks of The American Institute of Architects. This draft was produced at 14:06:49 ET on 02/16/2024 under Order No.2114457573 which expires on 07/31/2024, is not for resale, is licensed for one-time use only, and may only be used in accordance with the AIA Contract Documents® Terms of Service. To report copyright violations, e-mail docinfo@aiacontracts.com.
User Notes: (1632597836)

Minor Changes in the Work
1.1.1, 3.4.2, 3.12.8, 4.2.8, 7.1, **7.4**
MISCELLANEOUS PROVISIONS
13
Modifications, Definition of
1.1.1
Modifications to the Contract
1.1.1, 1.1.2, 2.5, 3.11, 4.1.2, 4.2.1, 5.2.3, 7, 8.3.1, 9.7, 10.3.2
Mutual Responsibility
6.2
Nonconforming Work, Acceptance of
9.6.6, 9.9.3, **12.3**
Nonconforming Work, Rejection and Correction of
2.4, 2.5, 3.5, 4.2.6, 6.2.4, 9.5.1, 9.8.2, 9.9.3, 9.10.4, 12.2
Notice
1.6, 1.6.1, 1.6.2, 2.1.2, 2.2.2., 2.2.3, 2.2.4, 2.5, 3.2.4, 3.3.1, 3.7.4, 3.7.5, 3.9.2, 3.12.9, 3.12.10, 5.2.1, 7.4, 8.2.2 9.6.8, 9.7, 9.10.1, 10.2.8, 10.3.2, 11.5, 12.2.2.1, 13.4.1, 13.4.2, 14.1, 14.2.2, 14.4.2, 15.1.3, 15.1.5, 15.1.6, 15.4.1
Notice of Cancellation or Expiration of Insurance
11.1.4, 11.2.3
Notice of Claims
1.6.2, 2.1.2, 3.7.4, 9.6.8, 10.2.8, **15.1.3**, 15.1.5, 15.1.6, 15.2.8, 15.3.2, 15.4.1
Notice of Testing and Inspections
13.4.1, 13.4.2
Observations, Contractor's
3.2, 3.7.4
Occupancy
2.3.1, 9.6.6, 9.8
Orders, Written
1.1.1, 2.4, 3.9.2, 7, 8.2.2, 11.5, 12.1, 12.2.2.1, 13.4.2, 14.3.1
OWNER
2
Owner, Definition of
2.1.1
Owner, Evidence of Financial Arrangements
2.2, 13.2.2, 14.1.1.4
Owner, Information and Services Required of the
2.1.2, **2.2**, 2.3, 3.2.2, 3.12.10, 6.1.3, 6.1.4, 6.2.5, 9.3.2, 9.6.1, 9.6.4, 9.9.2, 9.10.3, 10.3.3, 11.2, 13.4.1, 13.4.2, 14.1.1.4, 14.1.4, 15.1.4
Owner's Authority
1.5, 2.1.1, 2.3.32.4, 2.5, 3.4.2, 3.8.1, 3.12.10, 3.14.2, 4.1.2, 4.2.4, 4.2.9, 5.2.1, 5.2.4, 5.4.1, 6.1, 6.3, 7.2.1, 7.3.1, 8.2.2, 8.3.1, 9.3.2, 9.5.1, 9.6.4, 9.9.1, 9.10.2, 10.3.2, 11.4, 11.5, 12.2.2, 12.3, 13.2.2, 14.3, 14.4, 15.2.7
Owner's Insurance
11.2
Owner's Relationship with Subcontractors
1.1.2, 5.2, 5.3, 5.4, 9.6.4, 9.10.2, 14.2.2
Owner's Right to Carry Out the Work
2.5, 14.2.2
Owner's Right to Clean Up
6.3
Owner's Right to Perform Construction and to Award Separate Contracts
6.1
Owner's Right to Stop the Work
2.4
Owner's Right to Suspend the Work
14.3
Owner's Right to Terminate the Contract
14.2, 14.4
Ownership and Use of Drawings, Specifications and Other Instruments of Service
1.1.1, 1.1.6, 1.1.7, **1.5**, 2.3.6, 3.2.2, 3.11, 3.17, 4.2.12, 5.3
Partial Occupancy or Use
9.6.6, **9.9**
Patching, Cutting and
3.14, 6.2.5
Patents
3.17
Payment, Applications for
4.2.5, 7.3.9, 9.2, **9.3**, 9.4, 9.5, 9.6.3, 9.7, 9.8.5, 9.10.1, 14.2.3, 14.2.4, 14.4.3
Payment, Certificates for
4.2.5, 4.2.9, 9.3.3, **9.4**, 9.5, 9.6.1, 9.6.6, 9.7, 9.10.1, 9.10.3, 14.1.1.3, 14.2.4
Payment, Failure of
9.5.1.3, **9.7**, 9.10.2, 13.5, 14.1.1.3, 14.2.1.2
Payment, Final
4.2.1, 4.2.9, **9.10**, 12.3, 14.2.4, 14.4.3
Payment Bond, Performance Bond and
7.3.4.4, 9.6.7, 9.10.3, **11.1.2**
Payments, Progress
9.3, **9.6**, 9.8.5, 9.10.3, 14.2.3, 15.1.4
PAYMENTS AND COMPLETION
9
Payments to Subcontractors
5.4.2, 9.5.1.3, 9.6.2, 9.6.3, 9.6.4, 9.6.7, 14.2.1.2
PCB
10.3.1
Performance Bond and Payment Bond
7.3.4.4, 9.6.7, 9.10.3, **11.1.2**
Permits, Fees, Notices and Compliance with Laws
2.3.1, **3.7**, 3.13, 7.3.4.4, 10.2.2
PERSONS AND PROPERTY, PROTECTION OF
10
Polychlorinated Biphenyl
10.3.1
Product Data, Definition of
3.12.2
Product Data and Samples, Shop Drawings
3.11, **3.12**, 4.2.7

AIA Document A201 – 2017. Copyright © 1911, 1915, 1918, 1925, 1937, 1951, 1958, 1961, 1963, 1966, 1970, 1976, 1987, 1997, 2007 and 2017. All rights reserved. "The American Institute of Architects," "American Institute of Architects," "AIA," the AIA Logo, and "AIA Contract Documents" are trademarks of The American Institute of Architects. This draft was produced at 14:06:49 ET on 02/16/2024 under Order No.2114457573 which expires on 07/31/2024, is not for resale, is licensed for one-time use only, and may only be used in accordance with the AIA Contract Documents® Terms of Service. To report copyright violations, e-mail docinfo@aiacontracts.com.
User Notes: (1632597836)

Progress and Completion
4.2.2, **8.2**, 9.8, 9.9.1, 14.1.4, 15.1.4
Progress Payments
9.3, **9.6**, 9.8.5, 9.10.3, 14.2.3, 15.1.4
Project, Definition of
1.1.4
Project Representatives
4.2.10
Property Insurance
10.2.5, **11.2**
Proposal Requirements
1.1.1
PROTECTION OF PERSONS AND PROPERTY
10
Regulations and Laws
1.5, 2.3.2, 3.2.3, 3.6, 3.7, 3.12.10, 3.13, 9.6.4, 9.9.1, 10.2.2, 13.1, 13.3, 13.4.1, 13.4.2, 13.5, 14, 15.2.8, 15.4
Rejection of Work
4.2.6, 12.2.1
Releases and Waivers of Liens
9.3.1, 9.10.2
Representations
3.2.1, 3.5, 3.12.6, 8.2.1, 9.3.3, 9.4.2, 9.5.1, 9.10.1
Representatives
2.1.1, 3.1.1, 3.9, 4.1.1, 4.2.10, 13.2.1
Responsibility for Those Performing the Work
3.3.2, 3.18, 4.2.2, 4.2.3, 5.3, 6.1.3, 6.2, 6.3, 9.5.1, 10
Retainage
9.3.1, 9.6.2, 9.8.5, 9.9.1, 9.10.2, 9.10.3
Review of Contract Documents and Field Conditions by Contractor
3.2, 3.12.7, 6.1.3
Review of Contractor's Submittals by Owner and Architect
3.10.1, 3.10.2, 3.11, 3.12, 4.2, 5.2, 6.1.3, 9.2, 9.8.2
Review of Shop Drawings, Product Data and Samples by Contractor
3.12
Rights and Remedies
1.1.2, 2.4, 2.5, 3.5, 3.7.4, 3.15.2, 4.2.6, 5.3, 5.4, 6.1, 6.3, 7.3.1, 8.3, 9.5.1, 9.7, 10.2.5, 10.3, 12.2.1, 12.2.2, 12.2.4, **13.3**, 14, 15.4
Royalties, Patents and Copyrights
3.17
Rules and Notices for Arbitration
15.4.1
Safety of Persons and Property
10.2, 10.4
Safety Precautions and Programs
3.3.1, 4.2.2, 4.2.7, 5.3, **10.1**, 10.2, 10.4
Samples, Definition of
3.12.3
Samples, Shop Drawings, Product Data and
3.11, **3.12**, 4.2.7
Samples at the Site, Documents and
3.11
Schedule of Values
9.2, 9.3.1
Schedules, Construction
3.10, 3.12.1, 3.12.2, 6.1.3, 15.1.6.2
Separate Contracts and Contractors
1.1.4, 3.12.5, 3.14.2, 4.2.4, 4.2.7, 6, 8.3.1, 12.1.2
Separate Contractors, Definition of
6.1.1
Shop Drawings, Definition of
3.12.1
Shop Drawings, Product Data and Samples
3.11, **3.12**, 4.2.7
Site, Use of
3.13, 6.1.1, 6.2.1
Site Inspections
3.2.2, 3.3.3, 3.7.1, 3.7.4, 4.2, 9.9.2, 9.4.2, 9.10.1, 13.4
Site Visits, Architect's
3.7.4, 4.2.2, 4.2.9, 9.4.2, 9.5.1, 9.9.2, 9.10.1, 13.4
Special Inspections and Testing
4.2.6, 12.2.1, 13.4
Specifications, Definition of
1.1.6
Specifications
1.1.1, **1.1.6**, 1.2.2, 1.5, 3.12.10, 3.17, 4.2.14
Statute of Limitations
15.1.2, 15.4.1.1
Stopping the Work
2.2.2, 2.4, 9.7, 10.3, 14.1
Stored Materials
6.2.1, 9.3.2, 10.2.1.2, 10.2.4
Subcontractor, Definition of
5.1.1
SUBCONTRACTORS
5
Subcontractors, Work by
1.2.2, 3.3.2, 3.12.1, 3.18, 4.2.3, 5.2.3, 5.3, 5.4, 9.3.1.2, 9.6.7
Subcontractual Relations
5.3, 5.4, 9.3.1.2, 9.6, 9.10, 10.2.1, 14.1, 14.2.1
Submittals
3.10, 3.11, 3.12, 4.2.7, 5.2.1, 5.2.3, 7.3.4, 9.2, 9.3, 9.8, 9.9.1, 9.10.2, 9.10.3
Submittal Schedule
3.10.2, 3.12.5, 4.2.7
Subrogation, Waivers of
6.1.1, **11.3**
Substances, Hazardous
10.3
Substantial Completion
4.2.9, 8.1.1, 8.1.3, 8.2.3, 9.4.2, **9.8**, 9.9.1, 9.10.3, 12.2, 15.1.2
Substantial Completion, Definition of
9.8.1
Substitution of Subcontractors
5.2.3, 5.2.4
Substitution of Architect
2.3.3

AIA Document A201 – 2017. Copyright © 1911, 1915, 1918, 1925, 1937, 1951, 1958, 1961, 1963, 1966, 1970, 1976, 1987, 1997, 2007 and 2017. All rights reserved. "The American Institute of Architects," "American Institute of Architects," "AIA," the AIA Logo, and "AIA Contract Documents" are trademarks of The American Institute of Architects. This draft was produced at 14:06:49 ET on 02/16/2024 under Order No.2114457573 which expires on 07/31/2024, is not for resale, is licensed for one-time use only, and may only be used in accordance with the AIA Contract Documents® Terms of Service. To report copyright violations, e-mail docinfo@aiacontracts.com.
User Notes: (1632597836)

Substitutions of Materials
3.4.2, 3.5, 7.3.8
Sub-subcontractor, Definition of
5.1.2
Subsurface Conditions
3.7.4
Successors and Assigns
13.2
Superintendent
3.9, 10.2.6
Supervision and Construction Procedures
1.2.2, **3.3**, 3.4, 3.12.10, 4.2.2, 4.2.7, 6.1.3, 6.2.4, 7.1.3, 7.3.4, 8.2, 8.3.1, 9.4.2, 10, 12, 14, 15.1.4
Suppliers
1.5, 3.12.1, 4.2.4, 4.2.6, 5.2.1, 9.3, 9.4.2, 9.5.4, 9.6, 9.10.5, 14.2.1
Surety
5.4.1.2, 9.6.8, 9.8.5, 9.10.2, 9.10.3, 11.1.2, 14.2.2, 15.2.7
Surety, Consent of
9.8.5, 9.10.2, 9.10.3
Surveys
1.1.7, 2.3.4
Suspension by the Owner for Convenience
14.3
Suspension of the Work
3.7.5, 5.4.2, 14.3
Suspension or Termination of the Contract
5.4.1.1, 14
Taxes
3.6, 3.8.2.1, 7.3.4.4
Termination by the Contractor
14.1, 15.1.7
Termination by the Owner for Cause
5.4.1.1, **14.2,** 15.1.7
Termination by the Owner for Convenience
14.4
Termination of the Architect
2.3.3
Termination of the Contractor Employment
14.2.2

TERMINATION OR SUSPENSION OF THE CONTRACT
14
Tests and Inspections
3.1.3, 3.3.3, 3.7.1, 4.2.2, 4.2.6, 4.2.9, 9.4.2, 9.8.3, 9.9.2, 9.10.1, 10.3.2, 12.2.1, **13.4**
TIME
8
Time, Delays and Extensions of
3.2.4, 3.7.4, 5.2.3, 7.2.1, 7.3.1, 7.4, **8.3**, 9.5.1, 9.7, 10.3.2, 10.4, 14.3.2, 15.1.6, 15.2.5
Time Limits
2.1.2, 2.2, 2.5, 3.2.2, 3.10, 3.11, 3.12.5, 3.15.1, 4.2, 5.2, 5.3, 5.4, 6.2.4, 7.3, 7.4, 8.2, 9.2, 9.3.1, 9.3.3, 9.4.1, 9.5, 9.6, 9.7, 9.8, 9.9, 9.10, 12.2, 13.4, 14, 15.1.2, 15.1.3, 15.4
Time Limits on Claims
3.7.4, 10.2.8, 15.1.2, 15.1.3
Title to Work
9.3.2, 9.3.3
UNCOVERING AND CORRECTION OF WORK
12
Uncovering of Work
12.1
Unforeseen Conditions, Concealed or Unknown
3.7.4, 8.3.1, 10.3
Unit Prices
7.3.3.2, 9.1.2
Use of Documents
1.1.1, 1.5, 2.3.6, 3.12.6, 5.3
Use of Site
3.13, 6.1.1, 6.2.1
Values, Schedule of
9.2, 9.3.1
Waiver of Claims by the Architect
13.3.2
Waiver of Claims by the Contractor
9.10.5, 13.3.2, **15.1.7**
Waiver of Claims by the Owner
9.9.3, 9.10.3, 9.10.4, 12.2.2.1, 13.3.2, 14.2.4, **15.1.7**
Waiver of Consequential Damages
14.2.4, 15.1.7
Waiver of Liens
9.3, 9.10.2, 9.10.4
Waivers of Subrogation
6.1.1, **11.3**
Warranty
3.5, 4.2.9, 9.3.3, 9.8.4, 9.9.1, 9.10.2, 9.10.4, 12.2.2, 15.1.2
Weather Delays
8.3, 15.1.6.2
Work, Definition of
1.1.3
Written Consent
1.5.2, 3.4.2, 3.7.4, 3.12.8, 3.14.2, 4.1.2, 9.3.2, 9.10.3, 13.2, 13.3.2, 15.4.4.2
Written Interpretations
4.2.11, 4.2.12
Written Orders
1.1.1, 2.4, 3.9, 7, 8.2.2, 12.1, 12.2, 13.4.2, 14.3.1

AIA Document A201 – 2017. Copyright © 1911, 1915, 1918, 1925, 1937, 1951, 1958, 1961, 1963, 1966, 1970, 1976, 1987, 1997, 2007 and 2017. All rights reserved. "The American Institute of Architects," "American Institute of Architects," "AIA," the AIA Logo, and "AIA Contract Documents" are trademarks of The American Institute of Architects. This draft was produced at 14:06:49 ET on 02/16/2024 under Order No.2114457573 which expires on 07/31/2024, is not for resale, is licensed for one-time use only, and may only be used in accordance with the AIA Contract Documents® Terms of Service. To report copyright violations, e-mail docinfo@aiacontracts.com.
User Notes: (1632597836)

ARTICLE 1 GENERAL PROVISIONS

§ 1.1 Basic Definitions

§ 1.1.1 The Contract Documents

The Contract Documents are enumerated in the Agreement between the Owner and Contractor (hereinafter the Agreement) and consist of the Agreement, Conditions of the Contract (General, Supplementary and other Conditions), Drawings, Specifications, Addenda issued prior to execution of the Contract, other documents listed in the Agreement, and Modifications issued after execution of the Contract. A Modification is (1) a written amendment to the Contract signed by both parties, (2) a Change Order, (3) a Construction Change Directive, or (4) a written order for a minor change in the Work issued by the Architect. Unless specifically enumerated in the Agreement, the Contract Documents do not include the advertisement or invitation to bid, Instructions to Bidders, sample forms, other information furnished by the Owner in anticipation of receiving bids or proposals, the Contractor's bid or proposal, or portions of Addenda relating to bidding or proposal requirements.

§ 1.1.2 The Contract

The Contract Documents form the Contract for Construction. The Contract represents the entire and integrated agreement between the parties hereto and supersedes prior negotiations, representations, or agreements, either written or oral. The Contract may be amended or modified only by a Modification. The Contract Documents shall not be construed to create a contractual relationship of any kind (1) between the Contractor and the Architect or the Architect's consultants, (2) between the Owner and a Subcontractor or a Sub-subcontractor, (3) between the Owner and the Architect or the Architect's consultants, or (4) between any persons or entities other than the Owner and the Contractor. The Architect shall, however, be entitled to performance and enforcement of obligations under the Contract intended to facilitate performance of the Architect's duties.

§ 1.1.3 The Work

The term "Work" means the construction and services required by the Contract Documents, whether completed or partially completed, and includes all other labor, materials, equipment, and services provided or to be provided by the Contractor to fulfill the Contractor's obligations. The Work may constitute the whole or a part of the Project.

§ 1.1.4 The Project

The Project is the total construction of which the Work performed under the Contract Documents may be the whole or a part and which may include construction by the Owner and by Separate Contractors.

§ 1.1.5 The Drawings

The Drawings are the graphic and pictorial portions of the Contract Documents showing the design, location and dimensions of the Work, generally including plans, elevations, sections, details, schedules, and diagrams.

§ 1.1.6 The Specifications

The Specifications are that portion of the Contract Documents consisting of the written requirements for materials, equipment, systems, standards and workmanship for the Work, and performance of related services.

§ 1.1.7 Instruments of Service

Instruments of Service are representations, in any medium of expression now known or later developed, of the tangible and intangible creative work performed by the Architect and the Architect's consultants under their respective professional services agreements. Instruments of Service may include, without limitation, studies, surveys, models, sketches, drawings, specifications, and other similar materials.

§ 1.1.8 Initial Decision Maker

The Initial Decision Maker is the person identified in the Agreement to render initial decisions on Claims in accordance with Section 15.2. The Initial Decision Maker shall not show partiality to the Owner or Contractor and shall not be liable for results of interpretations or decisions rendered in good faith.

§ 1.2 Correlation and Intent of the Contract Documents

§ 1.2.1 The intent of the Contract Documents is to include all items necessary for the proper execution and completion of the Work by the Contractor. The Contract Documents are complementary, and what is required by one shall be as binding as if required by all; performance by the Contractor shall be required only to the extent consistent with the Contract Documents and reasonably inferable from them as being necessary to produce the indicated results.

AIA Document A201 – 2017. Copyright © 1911, 1915, 1918, 1925, 1937, 1951, 1958, 1961, 1963, 1966, 1970, 1976, 1987, 1997, 2007 and 2017. All rights reserved. "The American Institute of Architects," "American Institute of Architects," "AIA," the AIA Logo, and "AIA Contract Documents" are trademarks of The American Institute of Architects. This draft was produced at 14:06:49 ET on 02/16/2024 under Order No.2114457573 which expires on 07/31/2024, is not for resale, is licensed for one-time use only, and may only be used in accordance with the AIA Contract Documents® Terms of Service. To report copyright violations, e-mail docinfo@aiacontracts.com.
User Notes: (1632597836)

§ 1.2.1.1 The invalidity of any provision of the Contract Documents shall not invalidate the Contract or its remaining provisions. If it is determined that any provision of the Contract Documents violates any law, or is otherwise invalid or unenforceable, then that provision shall be revised to the extent necessary to make that provision legal and enforceable. In such case the Contract Documents shall be construed, to the fullest extent permitted by law, to give effect to the parties' intentions and purposes in executing the Contract.

§ 1.2.2 Organization of the Specifications into divisions, sections and articles, and arrangement of Drawings shall not control the Contractor in dividing the Work among Subcontractors or in establishing the extent of Work to be performed by any trade.

§ 1.2.3 Unless otherwise stated in the Contract Documents, words that have well-known technical or construction industry meanings are used in the Contract Documents in accordance with such recognized meanings.

§ 1.3 Capitalization

Terms capitalized in these General Conditions include those that are (1) specifically defined, (2) the titles of numbered articles, or (3) the titles of other documents published by the American Institute of Architects.

§ 1.4 Interpretation

In the interest of brevity the Contract Documents frequently omit modifying words such as "all" and "any" and articles such as "the" and "an," but the fact that a modifier or an article is absent from one statement and appears in another is not intended to affect the interpretation of either statement.

§ 1.5 Ownership and Use of Drawings, Specifications, and Other Instruments of Service

§ 1.5.1 The Architect and the Architect's consultants shall be deemed the authors and owners of their respective Instruments of Service, including the Drawings and Specifications, and retain all common law, statutory, and other reserved rights in their Instruments of Service, including copyrights. The Contractor, Subcontractors, Sub-subcontractors, and suppliers shall not own or claim a copyright in the Instruments of Service. Submittal or distribution to meet official regulatory requirements or for other purposes in connection with the Project is not to be construed as publication in derogation of the Architect's or Architect's consultants' reserved rights.

§ 1.5.2 The Contractor, Subcontractors, Sub-subcontractors, and suppliers are authorized to use and reproduce the Instruments of Service provided to them, subject to any protocols established pursuant to Sections 1.7 and 1.8, solely and exclusively for execution of the Work. All copies made under this authorization shall bear the copyright notice, if any, shown on the Instruments of Service. The Contractor, Subcontractors, Sub-subcontractors, and suppliers may not use the Instruments of Service on other projects or for additions to the Project outside the scope of the Work without the specific written consent of the Owner, Architect, and the Architect's consultants.

§ 1.6 Notice

§ 1.6.1 Except as otherwise provided in Section 1.6.2, where the Contract Documents require one party to notify or give notice to the other party, such notice shall be provided in writing to the designated representative of the party to whom the notice is addressed and shall be deemed to have been duly served if delivered in person, by mail, by courier, or by electronic transmission if a method for electronic transmission is set forth in the Agreement.

§ 1.6.2 Notice of Claims as provided in Section 15.1.3 shall be provided in writing and shall be deemed to have been duly served only if delivered to the designated representative of the party to whom the notice is addressed by certified or registered mail, or by courier providing proof of delivery.

§ 1.7 Digital Data Use and Transmission

The parties shall agree upon protocols governing the transmission and use of Instruments of Service or any other information or documentation in digital form. The parties will use AIA Document E203™–2013, Building Information Modeling and Digital Data Exhibit, to establish the protocols for the development, use, transmission, and exchange of digital data.

§ 1.8 Building Information Models Use and Reliance

Any use of, or reliance on, all or a portion of a building information model without agreement to protocols governing the use of, and reliance on, the information contained in the model and without having those protocols set

AIA Document A201 – 2017. Copyright © 1911, 1915, 1918, 1925, 1937, 1951, 1958, 1961, 1963, 1966, 1970, 1976, 1987, 1997, 2007 and 2017. All rights reserved. "The American Institute of Architects," "American Institute of Architects," "AIA," the AIA Logo, and "AIA Contract Documents" are trademarks of The American Institute of Architects. This draft was produced at 14:06:49 ET on 02/16/2024 under Order No.2114457573 which expires on 07/31/2024, is not for resale, is licensed for one-time use only, and may only be used in accordance with the AIA Contract Documents® Terms of Service. To report copyright violations, e-mail docinfo@aiacontracts.com.
User Notes: (1632597836)

forth in AIA Document E203™–2013, Building Information Modeling and Digital Data Exhibit, and the requisite AIA Document G202™–2013, Project Building Information Modeling Protocol Form, shall be at the using or relying party's sole risk and without liability to the other party and its contractors or consultants, the authors of, or contributors to, the building information model, and each of their agents and employees.

ARTICLE 2 OWNER

§ 2.1 General

§ 2.1.1 The Owner is the person or entity identified as such in the Agreement and is referred to throughout the Contract Documents as if singular in number. The Owner shall designate in writing a representative who shall have express authority to bind the Owner with respect to all matters requiring the Owner's approval or authorization. Except as otherwise provided in Section 4.2.1, the Architect does not have such authority. The term "Owner" means the Owner or the Owner's authorized representative.

§ 2.1.2 The Owner shall furnish to the Contractor, within fifteen days after receipt of a written request, information necessary and relevant for the Contractor to evaluate, give notice of, or enforce mechanic's lien rights. Such information shall include a correct statement of the record legal title to the property on which the Project is located, usually referred to as the site, and the Owner's interest therein.

§ 2.2 Evidence of the Owner's Financial Arrangements

§ 2.2.1 Prior to commencement of the Work and upon written request by the Contractor, the Owner shall furnish to the Contractor reasonable evidence that the Owner has made financial arrangements to fulfill the Owner's obligations under the Contract. The Contractor shall have no obligation to commence the Work until the Owner provides such evidence. If commencement of the Work is delayed under this Section 2.2.1, the Contract Time shall be extended appropriately.

§ 2.2.2 Following commencement of the Work and upon written request by the Contractor, the Owner shall furnish to the Contractor reasonable evidence that the Owner has made financial arrangements to fulfill the Owner's obligations under the Contract only if (1) the Owner fails to make payments to the Contractor as the Contract Documents require; (2) the Contractor identifies in writing a reasonable concern regarding the Owner's ability to make payment when due; or (3) a change in the Work materially changes the Contract Sum. If the Owner fails to provide such evidence, as required, within fourteen days of the Contractor's request, the Contractor may immediately stop the Work and, in that event, shall notify the Owner that the Work has stopped. However, if the request is made because a change in the Work materially changes the Contract Sum under (3) above, the Contractor may immediately stop only that portion of the Work affected by the change until reasonable evidence is provided. If the Work is stopped under this Section 2.2.2, the Contract Time shall be extended appropriately and the Contract Sum shall be increased by the amount of the Contractor's reasonable costs of shutdown, delay and start-up, plus interest as provided in the Contract Documents.

§ 2.2.3 After the Owner furnishes evidence of financial arrangements under this Section 2.2, the Owner shall not materially vary such financial arrangements without prior notice to the Contractor.

§ 2.2.4 Where the Owner has designated information furnished under this Section 2.2 as "confidential," the Contractor shall keep the information confidential and shall not disclose it to any other person. However, the Contractor may disclose "confidential" information, after seven (7) days' notice to the Owner, where disclosure is required by law, including a subpoena or other form of compulsory legal process issued by a court or governmental entity, or by court or arbitrator(s) order. The Contractor may also disclose "confidential" information to its employees, consultants, sureties, Subcontractors and their employees, Sub-subcontractors, and others who need to know the content of such information solely and exclusively for the Project and who agree to maintain the confidentiality of such information.

§ 2.3 Information and Services Required of the Owner

§ 2.3.1 Except for permits and fees that are the responsibility of the Contractor under the Contract Documents, including those required under Section 3.7.1, the Owner shall secure and pay for necessary approvals, easements, assessments and charges required for construction, use or occupancy of permanent structures or for permanent changes in existing facilities.

AIA Document A201 – 2017. Copyright © 1911, 1915, 1918, 1925, 1937, 1951, 1958, 1961, 1963, 1966, 1970, 1976, 1987, 1997, 2007 and 2017. All rights reserved. "The American Institute of Architects," "American Institute of Architects," "AIA," the AIA Logo, and "AIA Contract Documents" are trademarks of The American Institute of Architects. This draft was produced at 14:06:49 ET on 02/16/2024 under Order No.2114457573 which expires on 07/31/2024, is not for resale, is licensed for one-time use only, and may only be used in accordance with the AIA Contract Documents® Terms of Service. To report copyright violations, e-mail docinfo@aiacontracts.com.
User Notes: (1632597836)

§ 2.3.2 The Owner shall retain an architect lawfully licensed to practice architecture, or an entity lawfully practicing architecture, in the jurisdiction where the Project is located. That person or entity is identified as the Architect in the Agreement and is referred to throughout the Contract Documents as if singular in number.

§ 2.3.3 If the employment of the Architect terminates, the Owner shall employ a successor to whom the Contractor has no reasonable objection and whose status under the Contract Documents shall be that of the Architect.

§ 2.3.4 The Owner shall furnish surveys describing physical characteristics, legal limitations and utility locations for the site of the Project, and a legal description of the site. The Contractor shall be entitled to rely on the accuracy of information furnished by the Owner but shall exercise proper precautions relating to the safe performance of the Work.

§ 2.3.5 The Owner shall furnish information or services required of the Owner by the Contract Documents with reasonable promptness. The Owner shall also furnish any other information or services under the Owner's control and relevant to the Contractor's performance of the Work with reasonable promptness after receiving the Contractor's written request for such information or services.

§ 2.3.6 Unless otherwise provided in the Contract Documents, the Owner shall furnish to the Contractor one copy of the Contract Documents for purposes of making reproductions pursuant to Section 1.5.2.

§ 2.4 Owner's Right to Stop the Work

If the Contractor fails to correct Work that is not in accordance with the requirements of the Contract Documents as required by Section 12.2 or repeatedly fails to carry out Work in accordance with the Contract Documents, the Owner may issue a written order to the Contractor to stop the Work, or any portion thereof, until the cause for such order has been eliminated; however, the right of the Owner to stop the Work shall not give rise to a duty on the part of the Owner to exercise this right for the benefit of the Contractor or any other person or entity, except to the extent required by Section 6.1.3.

§ 2.5 Owner's Right to Carry Out the Work

If the Contractor defaults or neglects to carry out the Work in accordance with the Contract Documents and fails within a ten-day period after receipt of notice from the Owner to commence and continue correction of such default or neglect with diligence and promptness, the Owner may, without prejudice to other remedies the Owner may have, correct such default or neglect. Such action by the Owner and amounts charged to the Contractor are both subject to prior approval of the Architect and the Architect may, pursuant to Section 9.5.1, withhold or nullify a Certificate for Payment in whole or in part, to the extent reasonably necessary to reimburse the Owner for the reasonable cost of correcting such deficiencies, including Owner's expenses and compensation for the Architect's additional services made necessary by such default, neglect, or failure. If current and future payments are not sufficient to cover such amounts, the Contractor shall pay the difference to the Owner. If the Contractor disagrees with the actions of the Owner or the Architect, or the amounts claimed as costs to the Owner, the Contractor may file a Claim pursuant to Article 15.

ARTICLE 3 CONTRACTOR

§ 3.1 General

§ 3.1.1 The Contractor is the person or entity identified as such in the Agreement and is referred to throughout the Contract Documents as if singular in number. The Contractor shall be lawfully licensed, if required in the jurisdiction where the Project is located. The Contractor shall designate in writing a representative who shall have express authority to bind the Contractor with respect to all matters under this Contract. The term "Contractor" means the Contractor or the Contractor's authorized representative.

§ 3.1.2 The Contractor shall perform the Work in accordance with the Contract Documents.

§ 3.1.3 The Contractor shall not be relieved of its obligations to perform the Work in accordance with the Contract Documents either by activities or duties of the Architect in the Architect's administration of the Contract, or by tests, inspections or approvals required or performed by persons or entities other than the Contractor.

AIA Document A201 – 2017. Copyright © 1911, 1915, 1918, 1925, 1937, 1951, 1958, 1961, 1963, 1966, 1970, 1976, 1987, 1997, 2007 and 2017. All rights reserved. "The American Institute of Architects," "American Institute of Architects," "AIA," the AIA Logo, and "AIA Contract Documents" are trademarks of The American Institute of Architects. This draft was produced at 14:06:49 ET on 02/16/2024 under Order No.2114457573 which expires on 07/31/2024, is not for resale, is licensed for one-time use only, and may only be used in accordance with the AIA Contract Documents® Terms of Service. To report copyright violations, e-mail docinfo@aiacontracts.com.
User Notes: (1632597836)

§ 3.2 Review of Contract Documents and Field Conditions by Contractor

§ 3.2.1 Execution of the Contract by the Contractor is a representation that the Contractor has visited the site, become generally familiar with local conditions under which the Work is to be performed, and correlated personal observations with requirements of the Contract Documents.

§ 3.2.2 Because the Contract Documents are complementary, the Contractor shall, before starting each portion of the Work, carefully study and compare the various Contract Documents relative to that portion of the Work, as well as the information furnished by the Owner pursuant to Section 2.3.4, shall take field measurements of any existing conditions related to that portion of the Work, and shall observe any conditions at the site affecting it. These obligations are for the purpose of facilitating coordination and construction by the Contractor and are not for the purpose of discovering errors, omissions, or inconsistencies in the Contract Documents; however, the Contractor shall promptly report to the Architect any errors, inconsistencies or omissions discovered by or made known to the Contractor as a request for information in such form as the Architect may require. It is recognized that the Contractor's review is made in the Contractor's capacity as a contractor and not as a licensed design professional, unless otherwise specifically provided in the Contract Documents.

§ 3.2.3 The Contractor is not required to ascertain that the Contract Documents are in accordance with applicable laws, statutes, ordinances, codes, rules and regulations, or lawful orders of public authorities, but the Contractor shall promptly report to the Architect any nonconformity discovered by or made known to the Contractor as a request for information in such form as the Architect may require.

§ 3.2.4 If the Contractor believes that additional cost or time is involved because of clarifications or instructions the Architect issues in response to the Contractor's notices or requests for information pursuant to Sections 3.2.2 or 3.2.3, the Contractor shall submit Claims as provided in Article 15. If the Contractor fails to perform the obligations of Sections 3.2.2 or 3.2.3, the Contractor shall pay such costs and damages to the Owner, subject to Section 15.1.7, as would have been avoided if the Contractor had performed such obligations. If the Contractor performs those obligations, the Contractor shall not be liable to the Owner or Architect for damages resulting from errors, inconsistencies or omissions in the Contract Documents, for differences between field measurements or conditions and the Contract Documents, or for nonconformities of the Contract Documents to applicable laws, statutes, ordinances, codes, rules and regulations, and lawful orders of public authorities.

§ 3.3 Supervision and Construction Procedures

§ 3.3.1 The Contractor shall supervise and direct the Work, using the Contractor's best skill and attention. The Contractor shall be solely responsible for, and have control over, construction means, methods, techniques, sequences, and procedures, and for coordinating all portions of the Work under the Contract. If the Contract Documents give specific instructions concerning construction means, methods, techniques, sequences, or procedures, the Contractor shall evaluate the jobsite safety thereof and shall be solely responsible for the jobsite safety of such means, methods, techniques, sequences, or procedures. If the Contractor determines that such means, methods, techniques, sequences or procedures may not be safe, the Contractor shall give timely notice to the Owner and Architect, and shall propose alternative means, methods, techniques, sequences, or procedures. The Architect shall evaluate the proposed alternative solely for conformance with the design intent for the completed construction. Unless the Architect objects to the Contractor's proposed alternative, the Contractor shall perform the Work using its alternative means, methods, techniques, sequences, or procedures.

§ 3.3.2 The Contractor shall be responsible to the Owner for acts and omissions of the Contractor's employees, Subcontractors and their agents and employees, and other persons or entities performing portions of the Work for, or on behalf of, the Contractor or any of its Subcontractors.

§ 3.3.3 The Contractor shall be responsible for inspection of portions of Work already performed to determine that such portions are in proper condition to receive subsequent Work.

§ 3.4 Labor and Materials

§ 3.4.1 Unless otherwise provided in the Contract Documents, the Contractor shall provide and pay for labor, materials, equipment, tools, construction equipment and machinery, water, heat, utilities, transportation, and other facilities and services necessary for proper execution and completion of the Work, whether temporary or permanent and whether or not incorporated or to be incorporated in the Work.

AIA Document A201 – 2017. Copyright © 1911, 1915, 1918, 1925, 1937, 1951, 1958, 1961, 1963, 1966, 1970, 1976, 1987, 1997, 2007 and 2017. All rights reserved. "The American Institute of Architects," "American Institute of Architects," "AIA," the AIA Logo, and "AIA Contract Documents" are trademarks of The American Institute of Architects. This draft was produced at 14:06:49 ET on 02/16/2024 under Order No.2114457573 which expires on 07/31/2024, is not for resale, is licensed for one-time use only, and may only be used in accordance with the AIA Contract Documents® Terms of Service. To report copyright violations, e-mail docinfo@aiacontracts.com.
User Notes: (1632597836)

§ 3.4.2 Except in the case of minor changes in the Work approved by the Architect in accordance with Section 3.12.8 or ordered by the Architect in accordance with Section 7.4, the Contractor may make substitutions only with the consent of the Owner, after evaluation by the Architect and in accordance with a Change Order or Construction Change Directive.

§ 3.4.3 The Contractor shall enforce strict discipline and good order among the Contractor's employees and other persons carrying out the Work. The Contractor shall not permit employment of unfit persons or persons not properly skilled in tasks assigned to them.

§ 3.5 Warranty

§ 3.5.1 The Contractor warrants to the Owner and Architect that materials and equipment furnished under the Contract will be of good quality and new unless the Contract Documents require or permit otherwise. The Contractor further warrants that the Work will conform to the requirements of the Contract Documents and will be free from defects, except for those inherent in the quality of the Work the Contract Documents require or permit. Work, materials, or equipment not conforming to these requirements may be considered defective. The Contractor's warranty excludes remedy for damage or defect caused by abuse, alterations to the Work not executed by the Contractor, improper or insufficient maintenance, improper operation, or normal wear and tear and normal usage. If required by the Architect, the Contractor shall furnish satisfactory evidence as to the kind and quality of materials and equipment.

§ 3.5.2 All material, equipment, or other special warranties required by the Contract Documents shall be issued in the name of the Owner, or shall be transferable to the Owner, and shall commence in accordance with Section 9.8.4.

§ 3.6 Taxes

The Contractor shall pay sales, consumer, use and similar taxes for the Work provided by the Contractor that are legally enacted when bids are received or negotiations concluded, whether or not yet effective or merely scheduled to go into effect.

§ 3.7 Permits, Fees, Notices and Compliance with Laws

§ 3.7.1 Unless otherwise provided in the Contract Documents, the Contractor shall secure and pay for the building permit as well as for other permits, fees, licenses, and inspections by government agencies necessary for proper execution and completion of the Work that are customarily secured after execution of the Contract and legally required at the time bids are received or negotiations concluded.

§ 3.7.2 The Contractor shall comply with and give notices required by applicable laws, statutes, ordinances, codes, rules and regulations, and lawful orders of public authorities applicable to performance of the Work.

§ 3.7.3 If the Contractor performs Work knowing it to be contrary to applicable laws, statutes, ordinances, codes, rules and regulations, or lawful orders of public authorities, the Contractor shall assume appropriate responsibility for such Work and shall bear the costs attributable to correction.

§ 3.7.4 Concealed or Unknown Conditions

If the Contractor encounters conditions at the site that are (1) subsurface or otherwise concealed physical conditions that differ materially from those indicated in the Contract Documents or (2) unknown physical conditions of an unusual nature that differ materially from those ordinarily found to exist and generally recognized as inherent in construction activities of the character provided for in the Contract Documents, the Contractor shall promptly provide notice to the Owner and the Architect before conditions are disturbed and in no event later than 14 days after first observance of the conditions. The Architect will promptly investigate such conditions and, if the Architect determines that they differ materially and cause an increase or decrease in the Contractor's cost of, or time required for, performance of any part of the Work, will recommend that an equitable adjustment be made in the Contract Sum or Contract Time, or both. If the Architect determines that the conditions at the site are not materially different from those indicated in the Contract Documents and that no change in the terms of the Contract is justified, the Architect shall promptly notify the Owner and Contractor, stating the reasons. If either party disputes the Architect's determination or recommendation, that party may submit a Claim as provided in Article 15.

§ 3.7.5 If, in the course of the Work, the Contractor encounters human remains or recognizes the existence of burial markers, archaeological sites or wetlands not indicated in the Contract Documents, the Contractor shall immediately

AIA Document A201 – 2017. Copyright © 1911, 1915, 1918, 1925, 1937, 1951, 1958, 1961, 1963, 1966, 1970, 1976, 1987, 1997, 2007 and 2017. All rights reserved. "The American Institute of Architects," "American Institute of Architects," "AIA," the AIA Logo, and "AIA Contract Documents" are trademarks of The American Institute of Architects. This draft was produced at 14:06:49 ET on 02/16/2024 under Order No.2114457573 which expires on 07/31/2024, is not for resale, is licensed for one-time use only, and may only be used in accordance with the AIA Contract Documents® Terms of Service. To report copyright violations, e-mail docinfo@aiacontracts.com.
User Notes: (1632597836)

suspend any operations that would affect them and shall notify the Owner and Architect. Upon receipt of such notice, the Owner shall promptly take any action necessary to obtain governmental authorization required to resume the operations. The Contractor shall continue to suspend such operations until otherwise instructed by the Owner but shall continue with all other operations that do not affect those remains or features. Requests for adjustments in the Contract Sum and Contract Time arising from the existence of such remains or features may be made as provided in Article 15.

§ 3.8 Allowances

§ 3.8.1 The Contractor shall include in the Contract Sum all allowances stated in the Contract Documents. Items covered by allowances shall be supplied for such amounts and by such persons or entities as the Owner may direct, but the Contractor shall not be required to employ persons or entities to whom the Contractor has reasonable objection.

§ 3.8.2 Unless otherwise provided in the Contract Documents,

- **.1** allowances shall cover the cost to the Contractor of materials and equipment delivered at the site and all required taxes, less applicable trade discounts;
- **.2** Contractor's costs for unloading and handling at the site, labor, installation costs, overhead, profit, and other expenses contemplated for stated allowance amounts shall be included in the Contract Sum but not in the allowances; and
- **.3** whenever costs are more than or less than allowances, the Contract Sum shall be adjusted accordingly by Change Order. The amount of the Change Order shall reflect (1) the difference between actual costs and the allowances under Section 3.8.2.1 and (2) changes in Contractor's costs under Section 3.8.2.2.

§ 3.8.3 Materials and equipment under an allowance shall be selected by the Owner with reasonable promptness.

§ 3.9 Superintendent

§ 3.9.1 The Contractor shall employ a competent superintendent and necessary assistants who shall be in attendance at the Project site during performance of the Work. The superintendent shall represent the Contractor, and communications given to the superintendent shall be as binding as if given to the Contractor.

§ 3.9.2 The Contractor, as soon as practicable after award of the Contract, shall notify the Owner and Architect of the name and qualifications of a proposed superintendent. Within 14 days of receipt of the information, the Architect may notify the Contractor, stating whether the Owner or the Architect (1) has reasonable objection to the proposed superintendent or (2) requires additional time for review. Failure of the Architect to provide notice within the 14-day period shall constitute notice of no reasonable objection.

§ 3.9.3 The Contractor shall not employ a proposed superintendent to whom the Owner or Architect has made reasonable and timely objection. The Contractor shall not change the superintendent without the Owner's consent, which shall not unreasonably be withheld or delayed.

§ 3.10 Contractor's Construction and Submittal Schedules

§ 3.10.1 The Contractor, promptly after being awarded the Contract, shall submit for the Owner's and Architect's information a Contractor's construction schedule for the Work. The schedule shall contain detail appropriate for the Project, including (1) the date of commencement of the Work, interim schedule milestone dates, and the date of Substantial Completion; (2) an apportionment of the Work by construction activity; and (3) the time required for completion of each portion of the Work. The schedule shall provide for the orderly progression of the Work to completion and shall not exceed time limits current under the Contract Documents. The schedule shall be revised at appropriate intervals as required by the conditions of the Work and Project.

§ 3.10.2 The Contractor, promptly after being awarded the Contract and thereafter as necessary to maintain a current submittal schedule, shall submit a submittal schedule for the Architect's approval. The Architect's approval shall not be unreasonably delayed or withheld. The submittal schedule shall (1) be coordinated with the Contractor's construction schedule, and (2) allow the Architect reasonable time to review submittals. If the Contractor fails to submit a submittal schedule, or fails to provide submittals in accordance with the approved submittal schedule, the Contractor shall not be entitled to any increase in Contract Sum or extension of Contract Time based on the time required for review of submittals.

AIA Document A201 – 2017. Copyright © 1911, 1915, 1918, 1925, 1937, 1951, 1958, 1961, 1963, 1966, 1970, 1976, 1987, 1997, 2007 and 2017. All rights reserved. "The American Institute of Architects," "American Institute of Architects," "AIA," the AIA Logo, and "AIA Contract Documents" are trademarks of The American Institute of Architects. This draft was produced at 14:06:49 ET on 02/16/2024 under Order No.2114457573 which expires on 07/31/2024, is not for resale, is licensed for one-time use only, and may only be used in accordance with the AIA Contract Documents® Terms of Service. To report copyright violations, e-mail docinfo@aiacontracts.com.
User Notes: (1632597836)

§ 3.10.3 The Contractor shall perform the Work in general accordance with the most recent schedules submitted to the Owner and Architect.

§ 3.11 Documents and Samples at the Site

The Contractor shall make available, at the Project site, the Contract Documents, including Change Orders, Construction Change Directives, and other Modifications, in good order and marked currently to indicate field changes and selections made during construction, and the approved Shop Drawings, Product Data, Samples, and similar required submittals. These shall be in electronic form or paper copy, available to the Architect and Owner, and delivered to the Architect for submittal to the Owner upon completion of the Work as a record of the Work as constructed.

§ 3.12 Shop Drawings, Product Data and Samples

§ 3.12.1 Shop Drawings are drawings, diagrams, schedules, and other data specially prepared for the Work by the Contractor or a Subcontractor, Sub-subcontractor, manufacturer, supplier, or distributor to illustrate some portion of the Work.

§ 3.12.2 Product Data are illustrations, standard schedules, performance charts, instructions, brochures, diagrams, and other information furnished by the Contractor to illustrate materials or equipment for some portion of the Work.

§ 3.12.3 Samples are physical examples that illustrate materials, equipment, or workmanship, and establish standards by which the Work will be judged.

§ 3.12.4 Shop Drawings, Product Data, Samples, and similar submittals are not Contract Documents. Their purpose is to demonstrate how the Contractor proposes to conform to the information given and the design concept expressed in the Contract Documents for those portions of the Work for which the Contract Documents require submittals. Review by the Architect is subject to the limitations of Section 4.2.7. Informational submittals upon which the Architect is not expected to take responsive action may be so identified in the Contract Documents. Submittals that are not required by the Contract Documents may be returned by the Architect without action.

§ 3.12.5 The Contractor shall review for compliance with the Contract Documents, approve, and submit to the Architect, Shop Drawings, Product Data, Samples, and similar submittals required by the Contract Documents, in accordance with the submittal schedule approved by the Architect or, in the absence of an approved submittal schedule, with reasonable promptness and in such sequence as to cause no delay in the Work or in the activities of the Owner or of Separate Contractors.

§ 3.12.6 By submitting Shop Drawings, Product Data, Samples, and similar submittals, the Contractor represents to the Owner and Architect that the Contractor has (1) reviewed and approved them, (2) determined and verified materials, field measurements and field construction criteria related thereto, or will do so, and (3) checked and coordinated the information contained within such submittals with the requirements of the Work and of the Contract Documents.

§ 3.12.7 The Contractor shall perform no portion of the Work for which the Contract Documents require submittal and review of Shop Drawings, Product Data, Samples, or similar submittals, until the respective submittal has been approved by the Architect.

§ 3.12.8 The Work shall be in accordance with approved submittals except that the Contractor shall not be relieved of responsibility for deviations from the requirements of the Contract Documents by the Architect's approval of Shop Drawings, Product Data, Samples, or similar submittals, unless the Contractor has specifically notified the Architect of such deviation at the time of submittal and (1) the Architect has given written approval to the specific deviation as a minor change in the Work, or (2) a Change Order or Construction Change Directive has been issued authorizing the deviation. The Contractor shall not be relieved of responsibility for errors or omissions in Shop Drawings, Product Data, Samples, or similar submittals, by the Architect's approval thereof.

§ 3.12.9 The Contractor shall direct specific attention, in writing or on resubmitted Shop Drawings, Product Data, Samples, or similar submittals, to revisions other than those requested by the Architect on previous submittals. In the absence of such notice, the Architect's approval of a resubmission shall not apply to such revisions.

AIA Document A201 – 2017. Copyright © 1911, 1915, 1918, 1925, 1937, 1951, 1958, 1961, 1963, 1966, 1970, 1976, 1987, 1997, 2007 and 2017. All rights reserved. "The American Institute of Architects," "American Institute of Architects," "AIA," the AIA Logo, and "AIA Contract Documents" are trademarks of The American Institute of Architects. This draft was produced at 14:06:49 ET on 02/16/2024 under Order No.2114457573 which expires on 07/31/2024, is not for resale, is licensed for one-time use only, and may only be used in accordance with the AIA Contract Documents® Terms of Service. To report copyright violations, e-mail docinfo@aiacontracts.com.
User Notes: (1632597836)

§ 3.12.10 The Contractor shall not be required to provide professional services that constitute the practice of architecture or engineering unless such services are specifically required by the Contract Documents for a portion of the Work or unless the Contractor needs to provide such services in order to carry out the Contractor's responsibilities for construction means, methods, techniques, sequences, and procedures. The Contractor shall not be required to provide professional services in violation of applicable law.

§ 3.12.10.1 If professional design services or certifications by a design professional related to systems, materials, or equipment are specifically required of the Contractor by the Contract Documents, the Owner and the Architect will specify all performance and design criteria that such services must satisfy. The Contractor shall be entitled to rely upon the adequacy and accuracy of the performance and design criteria provided in the Contract Documents. The Contractor shall cause such services or certifications to be provided by an appropriately licensed design professional, whose signature and seal shall appear on all drawings, calculations, specifications, certifications, Shop Drawings, and other submittals prepared by such professional. Shop Drawings, and other submittals related to the Work, designed or certified by such professional, if prepared by others, shall bear such professional's written approval when submitted to the Architect. The Owner and the Architect shall be entitled to rely upon the adequacy and accuracy of the services, certifications, and approvals performed or provided by such design professionals, provided the Owner and Architect have specified to the Contractor the performance and design criteria that such services must satisfy. Pursuant to this Section 3.12.10, the Architect will review and approve or take other appropriate action on submittals only for the limited purpose of checking for conformance with information given and the design concept expressed in the Contract Documents.

§ 3.12.10.2 If the Contract Documents require the Contractor's design professional to certify that the Work has been performed in accordance with the design criteria, the Contractor shall furnish such certifications to the Architect at the time and in the form specified by the Architect.

§ 3.13 Use of Site

The Contractor shall confine operations at the site to areas permitted by applicable laws, statutes, ordinances, codes, rules and regulations, lawful orders of public authorities, and the Contract Documents and shall not unreasonably encumber the site with materials or equipment.

§ 3.14 Cutting and Patching

§ 3.14.1 The Contractor shall be responsible for cutting, fitting, or patching required to complete the Work or to make its parts fit together properly. All areas requiring cutting, fitting, or patching shall be restored to the condition existing prior to the cutting, fitting, or patching, unless otherwise required by the Contract Documents.

§ 3.14.2 The Contractor shall not damage or endanger a portion of the Work or fully or partially completed construction of the Owner or Separate Contractors by cutting, patching, or otherwise altering such construction, or by excavation. The Contractor shall not cut or otherwise alter construction by the Owner or a Separate Contractor except with written consent of the Owner and of the Separate Contractor. Consent shall not be unreasonably withheld. The Contractor shall not unreasonably withhold, from the Owner or a Separate Contractor, its consent to cutting or otherwise altering the Work.

§ 3.15 Cleaning Up

§ 3.15.1 The Contractor shall keep the premises and surrounding area free from accumulation of waste materials and rubbish caused by operations under the Contract. At completion of the Work, the Contractor shall remove waste materials, rubbish, the Contractor's tools, construction equipment, machinery, and surplus materials from and about the Project.

§ 3.15.2 If the Contractor fails to clean up as provided in the Contract Documents, the Owner may do so and the Owner shall be entitled to reimbursement from the Contractor.

§ 3.16 Access to Work

The Contractor shall provide the Owner and Architect with access to the Work in preparation and progress wherever located.

AIA Document A201 – 2017. Copyright © 1911, 1915, 1918, 1925, 1937, 1951, 1958, 1961, 1963, 1966, 1970, 1976, 1987, 1997, 2007 and 2017. All rights reserved. "The American Institute of Architects," "American Institute of Architects," "AIA," the AIA Logo, and "AIA Contract Documents" are trademarks of The American Institute of Architects. This draft was produced at 14:06:49 ET on 02/16/2024 under Order No.2114457573 which expires on 07/31/2024, is not for resale, is licensed for one-time use only, and may only be used in accordance with the AIA Contract Documents® Terms of Service. To report copyright violations, e-mail docinfo@aiacontracts.com.
User Notes: (1632597836)

§ 3.17 Royalties, Patents and Copyrights

The Contractor shall pay all royalties and license fees. The Contractor shall defend suits or claims for infringement of copyrights and patent rights and shall hold the Owner and Architect harmless from loss on account thereof, but shall not be responsible for defense or loss when a particular design, process, or product of a particular manufacturer or manufacturers is required by the Contract Documents, or where the copyright violations are contained in Drawings, Specifications, or other documents prepared by the Owner or Architect. However, if an infringement of a copyright or patent is discovered by, or made known to, the Contractor, the Contractor shall be responsible for the loss unless the information is promptly furnished to the Architect.

§ 3.18 Indemnification

§ 3.18.1 To the fullest extent permitted by law, the Contractor shall indemnify and hold harmless the Owner, Architect, Architect's consultants, and agents and employees of any of them from and against claims, damages, losses, and expenses, including but not limited to attorneys' fees, arising out of or resulting from performance of the Work, provided that such claim, damage, loss, or expense is attributable to bodily injury, sickness, disease or death, or to injury to or destruction of tangible property (other than the Work itself), but only to the extent caused by the negligent acts or omissions of the Contractor, a Subcontractor, anyone directly or indirectly employed by them, or anyone for whose acts they may be liable, regardless of whether or not such claim, damage, loss, or expense is caused in part by a party indemnified hereunder. Such obligation shall not be construed to negate, abridge, or reduce other rights or obligations of indemnity that would otherwise exist as to a party or person described in this Section 3.18.

§ 3.18.2 In claims against any person or entity indemnified under this Section 3.18 by an employee of the Contractor, a Subcontractor, anyone directly or indirectly employed by them, or anyone for whose acts they may be liable, the indemnification obligation under Section 3.18.1 shall not be limited by a limitation on amount or type of damages, compensation, or benefits payable by or for the Contractor or a Subcontractor under workers' compensation acts, disability benefit acts, or other employee benefit acts.

ARTICLE 4 ARCHITECT

§ 4.1 General

§ 4.1.1 The Architect is the person or entity retained by the Owner pursuant to Section 2.3.2 and identified as such in the Agreement.

§ 4.1.2 Duties, responsibilities, and limitations of authority of the Architect as set forth in the Contract Documents shall not be restricted, modified, or extended without written consent of the Owner, Contractor, and Architect. Consent shall not be unreasonably withheld.

§ 4.2 Administration of the Contract

§ 4.2.1 The Architect will provide administration of the Contract as described in the Contract Documents and will be an Owner's representative during construction until the date the Architect issues the final Certificate for Payment. The Architect will have authority to act on behalf of the Owner only to the extent provided in the Contract Documents.

§ 4.2.2 The Architect will visit the site at intervals appropriate to the stage of construction, or as otherwise agreed with the Owner, to become generally familiar with the progress and quality of the portion of the Work completed, and to determine in general if the Work observed is being performed in a manner indicating that the Work, when fully completed, will be in accordance with the Contract Documents. However, the Architect will not be required to make exhaustive or continuous on-site inspections to check the quality or quantity of the Work. The Architect will not have control over, charge of, or responsibility for the construction means, methods, techniques, sequences or procedures, or for the safety precautions and programs in connection with the Work, since these are solely the Contractor's rights and responsibilities under the Contract Documents.

§ 4.2.3 On the basis of the site visits, the Architect will keep the Owner reasonably informed about the progress and quality of the portion of the Work completed, and promptly report to the Owner (1) known deviations from the Contract Documents, (2) known deviations from the most recent construction schedule submitted by the Contractor, and (3) defects and deficiencies observed in the Work. The Architect will not be responsible for the Contractor's failure to perform the Work in accordance with the requirements of the Contract Documents. The Architect will not

AIA Document A201 – 2017. Copyright © 1911, 1915, 1918, 1925, 1937, 1951, 1958, 1961, 1963, 1966, 1970, 1976, 1987, 1997, 2007 and 2017. All rights reserved. "The American Institute of Architects," "American Institute of Architects," "AIA," the AIA Logo, and "AIA Contract Documents" are trademarks of The American Institute of Architects. This draft was produced at 14:06:49 ET on 02/16/2024 under Order No.2114457573 which expires on 07/31/2024, is not for resale, is licensed for one-time use only, and may only be used in accordance with the AIA Contract Documents® Terms of Service. To report copyright violations, e-mail docinfo@aiacontracts.com.
User Notes: (1632597836)

have control over or charge of, and will not be responsible for acts or omissions of, the Contractor, Subcontractors, or their agents or employees, or any other persons or entities performing portions of the Work.

§ 4.2.4 Communications

The Owner and Contractor shall include the Architect in all communications that relate to or affect the Architect's services or professional responsibilities. The Owner shall promptly notify the Architect of the substance of any direct communications between the Owner and the Contractor otherwise relating to the Project. Communications by and with the Architect's consultants shall be through the Architect. Communications by and with Subcontractors and suppliers shall be through the Contractor. Communications by and with Separate Contractors shall be through the Owner. The Contract Documents may specify other communication protocols.

§ 4.2.5 Based on the Architect's evaluations of the Contractor's Applications for Payment, the Architect will review and certify the amounts due the Contractor and will issue Certificates for Payment in such amounts.

§ 4.2.6 The Architect has authority to reject Work that does not conform to the Contract Documents. Whenever the Architect considers it necessary or advisable, the Architect will have authority to require inspection or testing of the Work in accordance with Sections 13.4.2 and 13.4.3, whether or not the Work is fabricated, installed or completed. However, neither this authority of the Architect nor a decision made in good faith either to exercise or not to exercise such authority shall give rise to a duty or responsibility of the Architect to the Contractor, Subcontractors, suppliers, their agents or employees, or other persons or entities performing portions of the Work.

§ 4.2.7 The Architect will review and approve, or take other appropriate action upon, the Contractor's submittals such as Shop Drawings, Product Data, and Samples, but only for the limited purpose of checking for conformance with information given and the design concept expressed in the Contract Documents. The Architect's action will be taken in accordance with the submittal schedule approved by the Architect or, in the absence of an approved submittal schedule, with reasonable promptness while allowing sufficient time in the Architect's professional judgment to permit adequate review. Review of such submittals is not conducted for the purpose of determining the accuracy and completeness of other details such as dimensions and quantities, or for substantiating instructions for installation or performance of equipment or systems, all of which remain the responsibility of the Contractor as required by the Contract Documents. The Architect's review of the Contractor's submittals shall not relieve the Contractor of the obligations under Sections 3.3, 3.5, and 3.12. The Architect's review shall not constitute approval of safety precautions or of any construction means, methods, techniques, sequences, or procedures. The Architect's approval of a specific item shall not indicate approval of an assembly of which the item is a component.

§ 4.2.8 The Architect will prepare Change Orders and Construction Change Directives, and may order minor changes in the Work as provided in Section 7.4. The Architect will investigate and make determinations and recommendations regarding concealed and unknown conditions as provided in Section 3.7.4.

§ 4.2.9 The Architect will conduct inspections to determine the date or dates of Substantial Completion and the date of final completion; issue Certificates of Substantial Completion pursuant to Section 9.8; receive and forward to the Owner, for the Owner's review and records, written warranties and related documents required by the Contract and assembled by the Contractor pursuant to Section 9.10; and issue a final Certificate for Payment pursuant to Section 9.10.

§ 4.2.10 If the Owner and Architect agree, the Architect will provide one or more Project representatives to assist in carrying out the Architect's responsibilities at the site. The Owner shall notify the Contractor of any change in the duties, responsibilities and limitations of authority of the Project representatives.

§ 4.2.11 The Architect will interpret and decide matters concerning performance under, and requirements of, the Contract Documents on written request of either the Owner or Contractor. The Architect's response to such requests will be made in writing within any time limits agreed upon or otherwise with reasonable promptness.

§ 4.2.12 Interpretations and decisions of the Architect will be consistent with the intent of, and reasonably inferable from, the Contract Documents and will be in writing or in the form of drawings. When making such interpretations and decisions, the Architect will endeavor to secure faithful performance by both Owner and Contractor, will not show partiality to either, and will not be liable for results of interpretations or decisions rendered in good faith.

AIA Document A201 – 2017. Copyright © 1911, 1915, 1918, 1925, 1937, 1951, 1958, 1961, 1963, 1966, 1970, 1976, 1987, 1997, 2007 and 2017. All rights reserved. "The American Institute of Architects," "American Institute of Architects," "AIA," the AIA Logo, and "AIA Contract Documents" are trademarks of The American Institute of Architects. This draft was produced at 14:06:49 ET on 02/16/2024 under Order No.2114457573 which expires on 07/31/2024, is not for resale, is licensed for one-time use only, and may only be used in accordance with the AIA Contract Documents® Terms of Service. To report copyright violations, e-mail docinfo@aiacontracts.com.
User Notes: (1632597836)

§ 4.2.13 The Architect's decisions on matters relating to aesthetic effect will be final if consistent with the intent expressed in the Contract Documents.

§ 4.2.14 The Architect will review and respond to requests for information about the Contract Documents. The Architect's response to such requests will be made in writing within any time limits agreed upon or otherwise with reasonable promptness. If appropriate, the Architect will prepare and issue supplemental Drawings and Specifications in response to the requests for information.

ARTICLE 5 SUBCONTRACTORS

§ 5.1 Definitions

§ 5.1.1 A Subcontractor is a person or entity who has a direct contract with the Contractor to perform a portion of the Work at the site. The term "Subcontractor" is referred to throughout the Contract Documents as if singular in number and means a Subcontractor or an authorized representative of the Subcontractor. The term "Subcontractor" does not include a Separate Contractor or the subcontractors of a Separate Contractor.

§ 5.1.2 A Sub-subcontractor is a person or entity who has a direct or indirect contract with a Subcontractor to perform a portion of the Work at the site. The term "Sub-subcontractor" is referred to throughout the Contract Documents as if singular in number and means a Sub-subcontractor or an authorized representative of the Sub-subcontractor.

§ 5.2 Award of Subcontracts and Other Contracts for Portions of the Work

§ 5.2.1 Unless otherwise stated in the Contract Documents, the Contractor, as soon as practicable after award of the Contract, shall notify the Owner and Architect of the persons or entities proposed for each principal portion of the Work, including those who are to furnish materials or equipment fabricated to a special design. Within 14 days of receipt of the information, the Architect may notify the Contractor whether the Owner or the Architect (1) has reasonable objection to any such proposed person or entity or (2) requires additional time for review. Failure of the Architect to provide notice within the 14-day period shall constitute notice of no reasonable objection.

§ 5.2.2 The Contractor shall not contract with a proposed person or entity to whom the Owner or Architect has made reasonable and timely objection. The Contractor shall not be required to contract with anyone to whom the Contractor has made reasonable objection.

§ 5.2.3 If the Owner or Architect has reasonable objection to a person or entity proposed by the Contractor, the Contractor shall propose another to whom the Owner or Architect has no reasonable objection. If the proposed but rejected Subcontractor was reasonably capable of performing the Work, the Contract Sum and Contract Time shall be increased or decreased by the difference, if any, occasioned by such change, and an appropriate Change Order shall be issued before commencement of the substitute Subcontractor's Work. However, no increase in the Contract Sum or Contract Time shall be allowed for such change unless the Contractor has acted promptly and responsively in submitting names as required.

§ 5.2.4 The Contractor shall not substitute a Subcontractor, person, or entity for one previously selected if the Owner or Architect makes reasonable objection to such substitution.

§ 5.3 Subcontractual Relations

By appropriate written agreement, the Contractor shall require each Subcontractor, to the extent of the Work to be performed by the Subcontractor, to be bound to the Contractor by terms of the Contract Documents, and to assume toward the Contractor all the obligations and responsibilities, including the responsibility for safety of the Subcontractor's Work that the Contractor, by these Contract Documents, assumes toward the Owner and Architect. Each subcontract agreement shall preserve and protect the rights of the Owner and Architect under the Contract Documents with respect to the Work to be performed by the Subcontractor so that subcontracting thereof will not prejudice such rights, and shall allow to the Subcontractor, unless specifically provided otherwise in the subcontract agreement, the benefit of all rights, remedies, and redress against the Contractor that the Contractor, by the Contract Documents, has against the Owner. Where appropriate, the Contractor shall require each Subcontractor to enter into similar agreements with Sub-subcontractors. The Contractor shall make available to each proposed Subcontractor, prior to the execution of the subcontract agreement, copies of the Contract Documents to which the Subcontractor will be bound, and, upon written request of the Subcontractor, identify to the Subcontractor terms and conditions of the proposed subcontract agreement that may be at variance with the Contract Documents. Subcontractors will

AIA Document A201 – 2017. Copyright © 1911, 1915, 1918, 1925, 1937, 1951, 1958, 1961, 1963, 1966, 1970, 1976, 1987, 1997, 2007 and 2017. All rights reserved. "The American Institute of Architects," "American Institute of Architects," "AIA," the AIA Logo, and "AIA Contract Documents" are trademarks of The American Institute of Architects. This draft was produced at 14:06:49 ET on 02/16/2024 under Order No.2114457573 which expires on 07/31/2024, is not for resale, is licensed for one-time use only, and may only be used in accordance with the AIA Contract Documents® Terms of Service. To report copyright violations, e-mail docinfo@aiacontracts.com.
User Notes: (1632597836)

similarly make copies of applicable portions of such documents available to their respective proposed Sub-subcontractors.

§ 5.4 Contingent Assignment of Subcontracts

§ 5.4.1 Each subcontract agreement for a portion of the Work is assigned by the Contractor to the Owner, provided that

.1 assignment is effective only after termination of the Contract by the Owner for cause pursuant to Section 14.2 and only for those subcontract agreements that the Owner accepts by notifying the Subcontractor and Contractor; and

.2 assignment is subject to the prior rights of the surety, if any, obligated under bond relating to the Contract.

When the Owner accepts the assignment of a subcontract agreement, the Owner assumes the Contractor's rights and obligations under the subcontract.

§ 5.4.2 Upon such assignment, if the Work has been suspended for more than 30 days, the Subcontractor's compensation shall be equitably adjusted for increases in cost resulting from the suspension.

§ 5.4.3 Upon assignment to the Owner under this Section 5.4, the Owner may further assign the subcontract to a successor contractor or other entity. If the Owner assigns the subcontract to a successor contractor or other entity, the Owner shall nevertheless remain legally responsible for all of the successor contractor's obligations under the subcontract.

ARTICLE 6 CONSTRUCTION BY OWNER OR BY SEPARATE CONTRACTORS

§ 6.1 Owner's Right to Perform Construction and to Award Separate Contracts

§ 6.1.1 The term "Separate Contractor(s)" shall mean other contractors retained by the Owner under separate agreements. The Owner reserves the right to perform construction or operations related to the Project with the Owner's own forces, and with Separate Contractors retained under Conditions of the Contract substantially similar to those of this Contract, including those provisions of the Conditions of the Contract related to insurance and waiver of subrogation.

§ 6.1.2 When separate contracts are awarded for different portions of the Project or other construction or operations on the site, the term "Contractor" in the Contract Documents in each case shall mean the Contractor who executes each separate Owner-Contractor Agreement.

§ 6.1.3 The Owner shall provide for coordination of the activities of the Owner's own forces and of each Separate Contractor with the Work of the Contractor, who shall cooperate with them. The Contractor shall participate with any Separate Contractors and the Owner in reviewing their construction schedules. The Contractor shall make any revisions to its construction schedule deemed necessary after a joint review and mutual agreement. The construction schedules shall then constitute the schedules to be used by the Contractor, Separate Contractors, and the Owner until subsequently revised.

§ 6.1.4 Unless otherwise provided in the Contract Documents, when the Owner performs construction or operations related to the Project with the Owner's own forces or with Separate Contractors, the Owner or its Separate Contractors shall have the same obligations and rights that the Contractor has under the Conditions of the Contract, including, without excluding others, those stated in Article 3, this Article 6, and Articles 10, 11, and 12.

§ 6.2 Mutual Responsibility

§ 6.2.1 The Contractor shall afford the Owner and Separate Contractors reasonable opportunity for introduction and storage of their materials and equipment and performance of their activities, and shall connect and coordinate the Contractor's construction and operations with theirs as required by the Contract Documents.

§ 6.2.2 If part of the Contractor's Work depends for proper execution or results upon construction or operations by the Owner or a Separate Contractor, the Contractor shall, prior to proceeding with that portion of the Work, promptly notify the Architect of apparent discrepancies or defects in the construction or operations by the Owner or Separate Contractor that would render it unsuitable for proper execution and results of the Contractor's Work. Failure of the Contractor to notify the Architect of apparent discrepancies or defects prior to proceeding with the

AIA Document A201 – 2017. Copyright © 1911, 1915, 1918, 1925, 1937, 1951, 1958, 1961, 1963, 1966, 1970, 1976, 1987, 1997, 2007 and 2017. All rights reserved. "The American Institute of Architects," "American Institute of Architects," "AIA," the AIA Logo, and "AIA Contract Documents" are trademarks of The American Institute of Architects. This draft was produced at 14:06:49 ET on 02/16/2024 under Order No.2114457573 which expires on 07/31/2024, is not for resale, is licensed for one-time use only, and may only be used in accordance with the AIA Contract Documents® Terms of Service. To report copyright violations, e-mail docinfo@aiacontracts.com.
User Notes: (1632597836)

Work shall constitute an acknowledgment that the Owner's or Separate Contractor's completed or partially completed construction is fit and proper to receive the Contractor's Work. The Contractor shall not be responsible for discrepancies or defects in the construction or operations by the Owner or Separate Contractor that are not apparent.

§ 6.2.3 The Contractor shall reimburse the Owner for costs the Owner incurs that are payable to a Separate Contractor because of the Contractor's delays, improperly timed activities or defective construction. The Owner shall be responsible to the Contractor for costs the Contractor incurs because of a Separate Contractor's delays, improperly timed activities, damage to the Work or defective construction.

§ 6.2.4 The Contractor shall promptly remedy damage that the Contractor wrongfully causes to completed or partially completed construction or to property of the Owner or Separate Contractor as provided in Section 10.2.5.

§ 6.2.5 The Owner and each Separate Contractor shall have the same responsibilities for cutting and patching as are described for the Contractor in Section 3.14.

§ 6.3 Owner's Right to Clean Up

If a dispute arises among the Contractor, Separate Contractors, and the Owner as to the responsibility under their respective contracts for maintaining the premises and surrounding area free from waste materials and rubbish, the Owner may clean up and the Architect will allocate the cost among those responsible.

ARTICLE 7 CHANGES IN THE WORK

§ 7.1 General

§ 7.1.1 Changes in the Work may be accomplished after execution of the Contract, and without invalidating the Contract, by Change Order, Construction Change Directive or order for a minor change in the Work, subject to the limitations stated in this Article 7 and elsewhere in the Contract Documents.

§ 7.1.2 A Change Order shall be based upon agreement among the Owner, Contractor, and Architect. A Construction Change Directive requires agreement by the Owner and Architect and may or may not be agreed to by the Contractor. An order for a minor change in the Work may be issued by the Architect alone.

§ 7.1.3 Changes in the Work shall be performed under applicable provisions of the Contract Documents. The Contractor shall proceed promptly with changes in the Work, unless otherwise provided in the Change Order, Construction Change Directive, or order for a minor change in the Work.

§ 7.2 Change Orders

§ 7.2.1 A Change Order is a written instrument prepared by the Architect and signed by the Owner, Contractor, and Architect stating their agreement upon all of the following:

- **.1** The change in the Work;
- **.2** The amount of the adjustment, if any, in the Contract Sum; and
- **.3** The extent of the adjustment, if any, in the Contract Time.

§ 7.3 Construction Change Directives

§ 7.3.1 A Construction Change Directive is a written order prepared by the Architect and signed by the Owner and Architect, directing a change in the Work prior to agreement on adjustment, if any, in the Contract Sum or Contract Time, or both. The Owner may by Construction Change Directive, without invalidating the Contract, order changes in the Work within the general scope of the Contract consisting of additions, deletions, or other revisions, the Contract Sum and Contract Time being adjusted accordingly.

§ 7.3.2 A Construction Change Directive shall be used in the absence of total agreement on the terms of a Change Order.

§ 7.3.3 If the Construction Change Directive provides for an adjustment to the Contract Sum, the adjustment shall be based on one of the following methods:

- **.1** Mutual acceptance of a lump sum properly itemized and supported by sufficient substantiating data to permit evaluation;
- **.2** Unit prices stated in the Contract Documents or subsequently agreed upon;

AIA Document A201 – 2017. Copyright © 1911, 1915, 1918, 1925, 1937, 1951, 1958, 1961, 1963, 1966, 1970, 1976, 1987, 1997, 2007 and 2017. All rights reserved. "The American Institute of Architects," "American Institute of Architects," "AIA," the AIA Logo, and "AIA Contract Documents" are trademarks of The American Institute of Architects. This draft was produced at 14:06:49 ET on 02/16/2024 under Order No.2114457573 which expires on 07/31/2024, is not for resale, is licensed for one-time use only, and may only be used in accordance with the AIA Contract Documents® Terms of Service. To report copyright violations, e-mail docinfo@aiacontracts.com.
User Notes: (1632597836)

.3 Cost to be determined in a manner agreed upon by the parties and a mutually acceptable fixed or percentage fee; or

.4 As provided in Section 7.3.4.

§ 7.3.4 If the Contractor does not respond promptly or disagrees with the method for adjustment in the Contract Sum, the Architect shall determine the adjustment on the basis of reasonable expenditures and savings of those performing the Work attributable to the change, including, in case of an increase in the Contract Sum, an amount for overhead and profit as set forth in the Agreement, or if no such amount is set forth in the Agreement, a reasonable amount. In such case, and also under Section 7.3.3.3, the Contractor shall keep and present, in such form as the Architect may prescribe, an itemized accounting together with appropriate supporting data. Unless otherwise provided in the Contract Documents, costs for the purposes of this Section 7.3.4 shall be limited to the following:

.1 Costs of labor, including applicable payroll taxes, fringe benefits required by agreement or custom, workers' compensation insurance, and other employee costs approved by the Architect;

.2 Costs of materials, supplies, and equipment, including cost of transportation, whether incorporated or consumed;

.3 Rental costs of machinery and equipment, exclusive of hand tools, whether rented from the Contractor or others;

.4 Costs of premiums for all bonds and insurance, permit fees, and sales, use, or similar taxes, directly related to the change; and

.5 Costs of supervision and field office personnel directly attributable to the change.

§ 7.3.5 If the Contractor disagrees with the adjustment in the Contract Time, the Contractor may make a Claim in accordance with applicable provisions of Article 15.

§ 7.3.6 Upon receipt of a Construction Change Directive, the Contractor shall promptly proceed with the change in the Work involved and advise the Architect of the Contractor's agreement or disagreement with the method, if any, provided in the Construction Change Directive for determining the proposed adjustment in the Contract Sum or Contract Time.

§ 7.3.7 A Construction Change Directive signed by the Contractor indicates the Contractor's agreement therewith, including adjustment in Contract Sum and Contract Time or the method for determining them. Such agreement shall be effective immediately and shall be recorded as a Change Order.

§ 7.3.8 The amount of credit to be allowed by the Contractor to the Owner for a deletion or change that results in a net decrease in the Contract Sum shall be actual net cost as confirmed by the Architect. When both additions and credits covering related Work or substitutions are involved in a change, the allowance for overhead and profit shall be figured on the basis of net increase, if any, with respect to that change.

§ 7.3.9 Pending final determination of the total cost of a Construction Change Directive to the Owner, the Contractor may request payment for Work completed under the Construction Change Directive in Applications for Payment. The Architect will make an interim determination for purposes of monthly certification for payment for those costs and certify for payment the amount that the Architect determines, in the Architect's professional judgment, to be reasonably justified. The Architect's interim determination of cost shall adjust the Contract Sum on the same basis as a Change Order, subject to the right of either party to disagree and assert a Claim in accordance with Article 15.

§ 7.3.10 When the Owner and Contractor agree with a determination made by the Architect concerning the adjustments in the Contract Sum and Contract Time, or otherwise reach agreement upon the adjustments, such agreement shall be effective immediately and the Architect will prepare a Change Order. Change Orders may be issued for all or any part of a Construction Change Directive.

§ 7.4 Minor Changes in the Work

The Architect may order minor changes in the Work that are consistent with the intent of the Contract Documents and do not involve an adjustment in the Contract Sum or an extension of the Contract Time. The Architect's order for minor changes shall be in writing. If the Contractor believes that the proposed minor change in the Work will affect the Contract Sum or Contract Time, the Contractor shall notify the Architect and shall not proceed to implement the change in the Work. If the Contractor performs the Work set forth in the Architect's order for a minor

AIA Document A201 – 2017. Copyright © 1911, 1915, 1918, 1925, 1937, 1951, 1958, 1961, 1963, 1966, 1970, 1976, 1987, 1997, 2007 and 2017. All rights reserved. "The American Institute of Architects," "American Institute of Architects," "AIA," the AIA Logo, and "AIA Contract Documents" are trademarks of The American Institute of Architects. This draft was produced at 14:06:49 ET on 02/16/2024 under Order No.2114457573 which expires on 07/31/2024, is not for resale, is licensed for one-time use only, and may only be used in accordance with the AIA Contract Documents® Terms of Service. To report copyright violations, e-mail docinfo@aiacontracts.com.
User Notes: (1632597836)

change without prior notice to the Architect that such change will affect the Contract Sum or Contract Time, the Contractor waives any adjustment to the Contract Sum or extension of the Contract Time.

ARTICLE 8 TIME

§ 8.1 Definitions

§ 8.1.1 Unless otherwise provided, Contract Time is the period of time, including authorized adjustments, allotted in the Contract Documents for Substantial Completion of the Work.

§ 8.1.2 The date of commencement of the Work is the date established in the Agreement.

§ 8.1.3 The date of Substantial Completion is the date certified by the Architect in accordance with Section 9.8.

§ 8.1.4 The term "day" as used in the Contract Documents shall mean calendar day unless otherwise specifically defined.

§ 8.2 Progress and Completion

§ 8.2.1 Time limits stated in the Contract Documents are of the essence of the Contract. By executing the Agreement, the Contractor confirms that the Contract Time is a reasonable period for performing the Work.

§ 8.2.2 The Contractor shall not knowingly, except by agreement or instruction of the Owner in writing, commence the Work prior to the effective date of insurance required to be furnished by the Contractor and Owner.

§ 8.2.3 The Contractor shall proceed expeditiously with adequate forces and shall achieve Substantial Completion within the Contract Time.

§ 8.3 Delays and Extensions of Time

§ 8.3.1 If the Contractor is delayed at any time in the commencement or progress of the Work by (1) an act or neglect of the Owner or Architect, of an employee of either, or of a Separate Contractor; (2) by changes ordered in the Work; (3) by labor disputes, fire, unusual delay in deliveries, unavoidable casualties, adverse weather conditions documented in accordance with Section 15.1.6.2, or other causes beyond the Contractor's control; (4) by delay authorized by the Owner pending mediation and binding dispute resolution; or (5) by other causes that the Contractor asserts, and the Architect determines, justify delay, then the Contract Time shall be extended for such reasonable time as the Architect may determine.

§ 8.3.2 Claims relating to time shall be made in accordance with applicable provisions of Article 15.

§ 8.3.3 This Section 8.3 does not preclude recovery of damages for delay by either party under other provisions of the Contract Documents.

ARTICLE 9 PAYMENTS AND COMPLETION

§ 9.1 Contract Sum

§ 9.1.1 The Contract Sum is stated in the Agreement and, including authorized adjustments, is the total amount payable by the Owner to the Contractor for performance of the Work under the Contract Documents.

§ 9.1.2 If unit prices are stated in the Contract Documents or subsequently agreed upon, and if quantities originally contemplated are materially changed so that application of such unit prices to the actual quantities causes substantial inequity to the Owner or Contractor, the applicable unit prices shall be equitably adjusted.

§ 9.2 Schedule of Values

Where the Contract is based on a stipulated sum or Guaranteed Maximum Price, the Contractor shall submit a schedule of values to the Architect before the first Application for Payment, allocating the entire Contract Sum to the various portions of the Work. The schedule of values shall be prepared in the form, and supported by the data to substantiate its accuracy, required by the Architect. This schedule, unless objected to by the Architect, shall be used as a basis for reviewing the Contractor's Applications for Payment. Any changes to the schedule of values shall be submitted to the Architect and supported by such data to substantiate its accuracy as the Architect may require, and unless objected to by the Architect, shall be used as a basis for reviewing the Contractor's subsequent Applications for Payment.

AIA Document A201 – 2017. Copyright © 1911, 1915, 1918, 1925, 1937, 1951, 1958, 1961, 1963, 1966, 1970, 1976, 1987, 1997, 2007 and 2017. All rights reserved. "The American Institute of Architects," "American Institute of Architects," "AIA," the AIA Logo, and "AIA Contract Documents" are trademarks of The American Institute of Architects. This draft was produced at 14:06:49 ET on 02/16/2024 under Order No.2114457573 which expires on 07/31/2024, is not for resale, is licensed for one-time use only, and may only be used in accordance with the AIA Contract Documents® Terms of Service. To report copyright violations, e-mail docinfo@aiacontracts.com.
User Notes: (1632597836)

§ 9.3 Applications for Payment

§ 9.3.1 At least ten days before the date established for each progress payment, the Contractor shall submit to the Architect an itemized Application for Payment prepared in accordance with the schedule of values, if required under Section 9.2, for completed portions of the Work. The application shall be notarized, if required, and supported by all data substantiating the Contractor's right to payment that the Owner or Architect require, such as copies of requisitions, and releases and waivers of liens from Subcontractors and suppliers, and shall reflect retainage if provided for in the Contract Documents.

§ 9.3.1.1 As provided in Section 7.3.9, such applications may include requests for payment on account of changes in the Work that have been properly authorized by Construction Change Directives, or by interim determinations of the Architect, but not yet included in Change Orders.

§ 9.3.1.2 Applications for Payment shall not include requests for payment for portions of the Work for which the Contractor does not intend to pay a Subcontractor or supplier, unless such Work has been performed by others whom the Contractor intends to pay.

§ 9.3.2 Unless otherwise provided in the Contract Documents, payments shall be made on account of materials and equipment delivered and suitably stored at the site for subsequent incorporation in the Work. If approved in advance by the Owner, payment may similarly be made for materials and equipment suitably stored off the site at a location agreed upon in writing. Payment for materials and equipment stored on or off the site shall be conditioned upon compliance by the Contractor with procedures satisfactory to the Owner to establish the Owner's title to such materials and equipment or otherwise protect the Owner's interest, and shall include the costs of applicable insurance, storage, and transportation to the site, for such materials and equipment stored off the site.

§ 9.3.3 The Contractor warrants that title to all Work covered by an Application for Payment will pass to the Owner no later than the time of payment. The Contractor further warrants that upon submittal of an Application for Payment all Work for which Certificates for Payment have been previously issued and payments received from the Owner shall, to the best of the Contractor's knowledge, information, and belief, be free and clear of liens, claims, security interests, or encumbrances, in favor of the Contractor, Subcontractors, suppliers, or other persons or entities that provided labor, materials, and equipment relating to the Work.

§ 9.4 Certificates for Payment

§ 9.4.1 The Architect will, within seven days after receipt of the Contractor's Application for Payment, either (1) issue to the Owner a Certificate for Payment in the full amount of the Application for Payment, with a copy to the Contractor; or (2) issue to the Owner a Certificate for Payment for such amount as the Architect determines is properly due, and notify the Contractor and Owner of the Architect's reasons for withholding certification in part as provided in Section 9.5.1; or (3) withhold certification of the entire Application for Payment, and notify the Contractor and Owner of the Architect's reason for withholding certification in whole as provided in Section 9.5.1.

§ 9.4.2 The issuance of a Certificate for Payment will constitute a representation by the Architect to the Owner, based on the Architect's evaluation of the Work and the data in the Application for Payment, that, to the best of the Architect's knowledge, information, and belief, the Work has progressed to the point indicated, the quality of the Work is in accordance with the Contract Documents, and that the Contractor is entitled to payment in the amount certified. The foregoing representations are subject to an evaluation of the Work for conformance with the Contract Documents upon Substantial Completion, to results of subsequent tests and inspections, to correction of minor deviations from the Contract Documents prior to completion, and to specific qualifications expressed by the Architect. However, the issuance of a Certificate for Payment will not be a representation that the Architect has (1) made exhaustive or continuous on-site inspections to check the quality or quantity of the Work; (2) reviewed construction means, methods, techniques, sequences, or procedures; (3) reviewed copies of requisitions received from Subcontractors and suppliers and other data requested by the Owner to substantiate the Contractor's right to payment; or (4) made examination to ascertain how or for what purpose the Contractor has used money previously paid on account of the Contract Sum.

§ 9.5 Decisions to Withhold Certification

§ 9.5.1 The Architect may withhold a Certificate for Payment in whole or in part, to the extent reasonably necessary to protect the Owner, if in the Architect's opinion the representations to the Owner required by Section 9.4.2 cannot

AIA Document A201 – 2017. Copyright © 1911, 1915, 1918, 1925, 1937, 1951, 1958, 1961, 1963, 1966, 1970, 1976, 1987, 1997, 2007 and 2017. All rights reserved. "The American Institute of Architects," "American Institute of Architects," "AIA," the AIA Logo, and "AIA Contract Documents" are trademarks of The American Institute of Architects. This draft was produced at 14:06:49 ET on 02/16/2024 under Order No.2114457573 which expires on 07/31/2024, is not for resale, is licensed for one-time use only, and may only be used in accordance with the AIA Contract Documents® Terms of Service. To report copyright violations, e-mail docinfo@aiacontracts.com.
User Notes: (1632597836)

be made. If the Architect is unable to certify payment in the amount of the Application, the Architect will notify the Contractor and Owner as provided in Section 9.4.1. If the Contractor and Architect cannot agree on a revised amount, the Architect will promptly issue a Certificate for Payment for the amount for which the Architect is able to make such representations to the Owner. The Architect may also withhold a Certificate for Payment or, because of subsequently discovered evidence, may nullify the whole or a part of a Certificate for Payment previously issued, to such extent as may be necessary in the Architect's opinion to protect the Owner from loss for which the Contractor is responsible, including loss resulting from acts and omissions described in Section 3.3.2, because of

- **.1** defective Work not remedied;
- **.2** third party claims filed or reasonable evidence indicating probable filing of such claims, unless security acceptable to the Owner is provided by the Contractor;
- **.3** failure of the Contractor to make payments properly to Subcontractors or suppliers for labor, materials or equipment;
- **.4** reasonable evidence that the Work cannot be completed for the unpaid balance of the Contract Sum;
- **.5** damage to the Owner or a Separate Contractor;
- **.6** reasonable evidence that the Work will not be completed within the Contract Time, and that the unpaid balance would not be adequate to cover actual or liquidated damages for the anticipated delay; or
- **.7** repeated failure to carry out the Work in accordance with the Contract Documents.

§ 9.5.2 When either party disputes the Architect's decision regarding a Certificate for Payment under Section 9.5.1, in whole or in part, that party may submit a Claim in accordance with Article 15.

§ 9.5.3 When the reasons for withholding certification are removed, certification will be made for amounts previously withheld.

§ 9.5.4 If the Architect withholds certification for payment under Section 9.5.1.3, the Owner may, at its sole option, issue joint checks to the Contractor and to any Subcontractor or supplier to whom the Contractor failed to make payment for Work properly performed or material or equipment suitably delivered. If the Owner makes payments by joint check, the Owner shall notify the Architect and the Contractor shall reflect such payment on its next Application for Payment.

§ 9.6 Progress Payments

§ 9.6.1 After the Architect has issued a Certificate for Payment, the Owner shall make payment in the manner and within the time provided in the Contract Documents, and shall so notify the Architect.

§ 9.6.2 The Contractor shall pay each Subcontractor, no later than seven days after receipt of payment from the Owner, the amount to which the Subcontractor is entitled, reflecting percentages actually retained from payments to the Contractor on account of the Subcontractor's portion of the Work. The Contractor shall, by appropriate agreement with each Subcontractor, require each Subcontractor to make payments to Sub-subcontractors in a similar manner.

§ 9.6.3 The Architect will, on request, furnish to a Subcontractor, if practicable, information regarding percentages of completion or amounts applied for by the Contractor and action taken thereon by the Architect and Owner on account of portions of the Work done by such Subcontractor.

§ 9.6.4 The Owner has the right to request written evidence from the Contractor that the Contractor has properly paid Subcontractors and suppliers amounts paid by the Owner to the Contractor for subcontracted Work. If the Contractor fails to furnish such evidence within seven days, the Owner shall have the right to contact Subcontractors and suppliers to ascertain whether they have been properly paid. Neither the Owner nor Architect shall have an obligation to pay, or to see to the payment of money to, a Subcontractor or supplier, except as may otherwise be required by law.

§ 9.6.5 The Contractor's payments to suppliers shall be treated in a manner similar to that provided in Sections 9.6.2, 9.6.3 and 9.6.4.

§ 9.6.6 A Certificate for Payment, a progress payment, or partial or entire use or occupancy of the Project by the Owner shall not constitute acceptance of Work not in accordance with the Contract Documents.

AIA Document A201 – 2017. Copyright © 1911, 1915, 1918, 1925, 1937, 1951, 1958, 1961, 1963, 1966, 1970, 1976, 1987, 1997, 2007 and 2017. All rights reserved. "The American Institute of Architects," "American Institute of Architects," "AIA," the AIA Logo, and "AIA Contract Documents" are trademarks of The American Institute of Architects. This draft was produced at 14:06:49 ET on 02/16/2024 under Order No.2114457573 which expires on 07/31/2024, is not for resale, is licensed for one-time use only, and may only be used in accordance with the AIA Contract Documents® Terms of Service. To report copyright violations, e-mail docinfo@aiacontracts.com.
User Notes: (1632597836)

§ 9.6.7 Unless the Contractor provides the Owner with a payment bond in the full penal sum of the Contract Sum, payments received by the Contractor for Work properly performed by Subcontractors or provided by suppliers shall be held by the Contractor for those Subcontractors or suppliers who performed Work or furnished materials, or both, under contract with the Contractor for which payment was made by the Owner. Nothing contained herein shall require money to be placed in a separate account and not commingled with money of the Contractor, create any fiduciary liability or tort liability on the part of the Contractor for breach of trust, or entitle any person or entity to an award of punitive damages against the Contractor for breach of the requirements of this provision.

§ 9.6.8 Provided the Owner has fulfilled its payment obligations under the Contract Documents, the Contractor shall defend and indemnify the Owner from all loss, liability, damage or expense, including reasonable attorney's fees and litigation expenses, arising out of any lien claim or other claim for payment by any Subcontractor or supplier of any tier. Upon receipt of notice of a lien claim or other claim for payment, the Owner shall notify the Contractor. If approved by the applicable court, when required, the Contractor may substitute a surety bond for the property against which the lien or other claim for payment has been asserted.

§ 9.7 Failure of Payment

If the Architect does not issue a Certificate for Payment, through no fault of the Contractor, within seven days after receipt of the Contractor's Application for Payment, or if the Owner does not pay the Contractor within seven days after the date established in the Contract Documents, the amount certified by the Architect or awarded by binding dispute resolution, then the Contractor may, upon seven additional days' notice to the Owner and Architect, stop the Work until payment of the amount owing has been received. The Contract Time shall be extended appropriately and the Contract Sum shall be increased by the amount of the Contractor's reasonable costs of shutdown, delay and start-up, plus interest as provided for in the Contract Documents.

§ 9.8 Substantial Completion

§ 9.8.1 Substantial Completion is the stage in the progress of the Work when the Work or designated portion thereof is sufficiently complete in accordance with the Contract Documents so that the Owner can occupy or utilize the Work for its intended use.

§ 9.8.2 When the Contractor considers that the Work, or a portion thereof which the Owner agrees to accept separately, is substantially complete, the Contractor shall prepare and submit to the Architect a comprehensive list of items to be completed or corrected prior to final payment. Failure to include an item on such list does not alter the responsibility of the Contractor to complete all Work in accordance with the Contract Documents.

§ 9.8.3 Upon receipt of the Contractor's list, the Architect will make an inspection to determine whether the Work or designated portion thereof is substantially complete. If the Architect's inspection discloses any item, whether or not included on the Contractor's list, which is not sufficiently complete in accordance with the Contract Documents so that the Owner can occupy or utilize the Work or designated portion thereof for its intended use, the Contractor shall, before issuance of the Certificate of Substantial Completion, complete or correct such item upon notification by the Architect. In such case, the Contractor shall then submit a request for another inspection by the Architect to determine Substantial Completion.

§ 9.8.4 When the Work or designated portion thereof is substantially complete, the Architect will prepare a Certificate of Substantial Completion that shall establish the date of Substantial Completion; establish responsibilities of the Owner and Contractor for security, maintenance, heat, utilities, damage to the Work and insurance; and fix the time within which the Contractor shall finish all items on the list accompanying the Certificate. Warranties required by the Contract Documents shall commence on the date of Substantial Completion of the Work or designated portion thereof unless otherwise provided in the Certificate of Substantial Completion.

§ 9.8.5 The Certificate of Substantial Completion shall be submitted to the Owner and Contractor for their written acceptance of responsibilities assigned to them in the Certificate. Upon such acceptance, and consent of surety if any, the Owner shall make payment of retainage applying to the Work or designated portion thereof. Such payment shall be adjusted for Work that is incomplete or not in accordance with the requirements of the Contract Documents.

AIA Document A201 – 2017. Copyright © 1911, 1915, 1918, 1925, 1937, 1951, 1958, 1961, 1963, 1966, 1970, 1976, 1987, 1997, 2007 and 2017. All rights reserved. "The American Institute of Architects," "American Institute of Architects," "AIA," the AIA Logo, and "AIA Contract Documents" are trademarks of The American Institute of Architects. This draft was produced at 14:06:49 ET on 02/16/2024 under Order No.2114457573 which expires on 07/31/2024, is not for resale, is licensed for one-time use only, and may only be used in accordance with the AIA Contract Documents® Terms of Service. To report copyright violations, e-mail docinfo@aiacontracts.com.
User Notes: (1632597836)

§ 9.9 Partial Occupancy or Use

§ 9.9.1 The Owner may occupy or use any completed or partially completed portion of the Work at any stage when such portion is designated by separate agreement with the Contractor, provided such occupancy or use is consented to by the insurer and authorized by public authorities having jurisdiction over the Project. Such partial occupancy or use may commence whether or not the portion is substantially complete, provided the Owner and Contractor have accepted in writing the responsibilities assigned to each of them for payments, retainage, if any, security, maintenance, heat, utilities, damage to the Work and insurance, and have agreed in writing concerning the period for correction of the Work and commencement of warranties required by the Contract Documents. When the Contractor considers a portion substantially complete, the Contractor shall prepare and submit a list to the Architect as provided under Section 9.8.2. Consent of the Contractor to partial occupancy or use shall not be unreasonably withheld. The stage of the progress of the Work shall be determined by written agreement between the Owner and Contractor or, if no agreement is reached, by decision of the Architect.

§ 9.9.2 Immediately prior to such partial occupancy or use, the Owner, Contractor, and Architect shall jointly inspect the area to be occupied or portion of the Work to be used in order to determine and record the condition of the Work.

§ 9.9.3 Unless otherwise agreed upon, partial occupancy or use of a portion or portions of the Work shall not constitute acceptance of Work not complying with the requirements of the Contract Documents.

§ 9.10 Final Completion and Final Payment

§ 9.10.1 Upon receipt of the Contractor's notice that the Work is ready for final inspection and acceptance and upon receipt of a final Application for Payment, the Architect will promptly make such inspection. When the Architect finds the Work acceptable under the Contract Documents and the Contract fully performed, the Architect will promptly issue a final Certificate for Payment stating that to the best of the Architect's knowledge, information and belief, and on the basis of the Architect's on-site visits and inspections, the Work has been completed in accordance with the Contract Documents and that the entire balance found to be due the Contractor and noted in the final Certificate is due and payable. The Architect's final Certificate for Payment will constitute a further representation that conditions listed in Section 9.10.2 as precedent to the Contractor's being entitled to final payment have been fulfilled.

§ 9.10.2 Neither final payment nor any remaining retained percentage shall become due until the Contractor submits to the Architect (1) an affidavit that payrolls, bills for materials and equipment, and other indebtedness connected with the Work for which the Owner or the Owner's property might be responsible or encumbered (less amounts withheld by Owner) have been paid or otherwise satisfied, (2) a certificate evidencing that insurance required by the Contract Documents to remain in force after final payment is currently in effect, (3) a written statement that the Contractor knows of no reason that the insurance will not be renewable to cover the period required by the Contract Documents, (4) consent of surety, if any, to final payment, (5) documentation of any special warranties, such as manufacturers' warranties or specific Subcontractor warranties, and (6) if required by the Owner, other data establishing payment or satisfaction of obligations, such as receipts and releases and waivers of liens, claims, security interests, or encumbrances arising out of the Contract, to the extent and in such form as may be designated by the Owner. If a Subcontractor refuses to furnish a release or waiver required by the Owner, the Contractor may furnish a bond satisfactory to the Owner to indemnify the Owner against such lien, claim, security interest, or encumbrance. If a lien, claim, security interest, or encumbrance remains unsatisfied after payments are made, the Contractor shall refund to the Owner all money that the Owner may be compelled to pay in discharging the lien, claim, security interest, or encumbrance, including all costs and reasonable attorneys' fees.

§ 9.10.3 If, after Substantial Completion of the Work, final completion thereof is materially delayed through no fault of the Contractor or by issuance of Change Orders affecting final completion, and the Architect so confirms, the Owner shall, upon application by the Contractor and certification by the Architect, and without terminating the Contract, make payment of the balance due for that portion of the Work fully completed, corrected, and accepted. If the remaining balance for Work not fully completed or corrected is less than retainage stipulated in the Contract Documents, and if bonds have been furnished, the written consent of the surety to payment of the balance due for that portion of the Work fully completed and accepted shall be submitted by the Contractor to the Architect prior to certification of such payment. Such payment shall be made under terms and conditions governing final payment, except that it shall not constitute a waiver of Claims.

AIA Document A201 – 2017. Copyright © 1911, 1915, 1918, 1925, 1937, 1951, 1958, 1961, 1963, 1966, 1970, 1976, 1987, 1997, 2007 and 2017. All rights reserved. "The American Institute of Architects," "American Institute of Architects," "AIA," the AIA Logo, and "AIA Contract Documents" are trademarks of The American Institute of Architects. This draft was produced at 14:06:49 ET on 02/16/2024 under Order No.2114457573 which expires on 07/31/2024, is not for resale, is licensed for one-time use only, and may only be used in accordance with the AIA Contract Documents® Terms of Service. To report copyright violations, e-mail docinfo@aiacontracts.com.
User Notes: (1632597836)

§ 9.10.4 The making of final payment shall constitute a waiver of Claims by the Owner except those arising from

- **.1** liens, Claims, security interests, or encumbrances arising out of the Contract and unsettled;
- **.2** failure of the Work to comply with the requirements of the Contract Documents;
- **.3** terms of special warranties required by the Contract Documents; or
- **.4** audits performed by the Owner, if permitted by the Contract Documents, after final payment.

§ 9.10.5 Acceptance of final payment by the Contractor, a Subcontractor, or a supplier, shall constitute a waiver of claims by that payee except those previously made in writing and identified by that payee as unsettled at the time of final Application for Payment.

ARTICLE 10 PROTECTION OF PERSONS AND PROPERTY

§ 10.1 Safety Precautions and Programs

The Contractor shall be responsible for initiating, maintaining, and supervising all safety precautions and programs in connection with the performance of the Contract.

§ 10.2 Safety of Persons and Property

§ 10.2.1 The Contractor shall take reasonable precautions for safety of, and shall provide reasonable protection to prevent damage, injury, or loss to

- **.1** employees on the Work and other persons who may be affected thereby;
- **.2** the Work and materials and equipment to be incorporated therein, whether in storage on or off the site, under care, custody, or control of the Contractor, a Subcontractor, or a Sub-subcontractor; and
- **.3** other property at the site or adjacent thereto, such as trees, shrubs, lawns, walks, pavements, roadways, structures, and utilities not designated for removal, relocation, or replacement in the course of construction.

§ 10.2.2 The Contractor shall comply with, and give notices required by applicable laws, statutes, ordinances, codes, rules and regulations, and lawful orders of public authorities, bearing on safety of persons or property or their protection from damage, injury, or loss.

§ 10.2.3 The Contractor shall implement, erect, and maintain, as required by existing conditions and performance of the Contract, reasonable safeguards for safety and protection, including posting danger signs and other warnings against hazards; promulgating safety regulations; and notifying the owners and users of adjacent sites and utilities of the safeguards.

§ 10.2.4 When use or storage of explosives or other hazardous materials or equipment, or unusual methods are necessary for execution of the Work, the Contractor shall exercise utmost care and carry on such activities under supervision of properly qualified personnel.

§ 10.2.5 The Contractor shall promptly remedy damage and loss (other than damage or loss insured under property insurance required by the Contract Documents) to property referred to in Sections 10.2.1.2 and 10.2.1.3 caused in whole or in part by the Contractor, a Subcontractor, a Sub-subcontractor, or anyone directly or indirectly employed by any of them, or by anyone for whose acts they may be liable and for which the Contractor is responsible under Sections 10.2.1.2 and 10.2.1.3. The Contractor may make a Claim for the cost to remedy the damage or loss to the extent such damage or loss is attributable to acts or omissions of the Owner or Architect or anyone directly or indirectly employed by either of them, or by anyone for whose acts either of them may be liable, and not attributable to the fault or negligence of the Contractor. The foregoing obligations of the Contractor are in addition to the Contractor's obligations under Section 3.18.

§ 10.2.6 The Contractor shall designate a responsible member of the Contractor's organization at the site whose duty shall be the prevention of accidents. This person shall be the Contractor's superintendent unless otherwise designated by the Contractor in writing to the Owner and Architect.

§ 10.2.7 The Contractor shall not permit any part of the construction or site to be loaded so as to cause damage or create an unsafe condition.

AIA Document A201 – 2017. Copyright © 1911, 1915, 1918, 1925, 1937, 1951, 1958, 1961, 1963, 1966, 1970, 1976, 1987, 1997, 2007 and 2017. All rights reserved. "The American Institute of Architects," "American Institute of Architects," "AIA," the AIA Logo, and "AIA Contract Documents" are trademarks of The American Institute of Architects. This draft was produced at 14:06:49 ET on 02/16/2024 under Order No.2114457573 which expires on 07/31/2024, is not for resale, is licensed for one-time use only, and may only be used in accordance with the AIA Contract Documents® Terms of Service. To report copyright violations, e-mail docinfo@aiacontracts.com.
User Notes: (1632597836)

§ 10.2.8 Injury or Damage to Person or Property

If either party suffers injury or damage to person or property because of an act or omission of the other party, or of others for whose acts such party is legally responsible, notice of the injury or damage, whether or not insured, shall be given to the other party within a reasonable time not exceeding 21 days after discovery. The notice shall provide sufficient detail to enable the other party to investigate the matter.

§ 10.3 Hazardous Materials and Substances

§ 10.3.1 The Contractor is responsible for compliance with any requirements included in the Contract Documents regarding hazardous materials or substances. If the Contractor encounters a hazardous material or substance not addressed in the Contract Documents and if reasonable precautions will be inadequate to prevent foreseeable bodily injury or death to persons resulting from a material or substance, including but not limited to asbestos or polychlorinated biphenyl (PCB), encountered on the site by the Contractor, the Contractor shall, upon recognizing the condition, immediately stop Work in the affected area and notify the Owner and Architect of the condition.

§ 10.3.2 Upon receipt of the Contractor's notice, the Owner shall obtain the services of a licensed laboratory to verify the presence or absence of the material or substance reported by the Contractor and, in the event such material or substance is found to be present, to cause it to be rendered harmless. Unless otherwise required by the Contract Documents, the Owner shall furnish in writing to the Contractor and Architect the names and qualifications of persons or entities who are to perform tests verifying the presence or absence of the material or substance or who are to perform the task of removal or safe containment of the material or substance. The Contractor and the Architect will promptly reply to the Owner in writing stating whether or not either has reasonable objection to the persons or entities proposed by the Owner. If either the Contractor or Architect has an objection to a person or entity proposed by the Owner, the Owner shall propose another to whom the Contractor and the Architect have no reasonable objection. When the material or substance has been rendered harmless, Work in the affected area shall resume upon written agreement of the Owner and Contractor. By Change Order, the Contract Time shall be extended appropriately and the Contract Sum shall be increased by the amount of the Contractor's reasonable additional costs of shutdown, delay, and start-up.

§ 10.3.3 To the fullest extent permitted by law, the Owner shall indemnify and hold harmless the Contractor, Subcontractors, Architect, Architect's consultants, and agents and employees of any of them from and against claims, damages, losses, and expenses, including but not limited to attorneys' fees, arising out of or resulting from performance of the Work in the affected area if in fact the material or substance presents the risk of bodily injury or death as described in Section 10.3.1 and has not been rendered harmless, provided that such claim, damage, loss, or expense is attributable to bodily injury, sickness, disease or death, or to injury to or destruction of tangible property (other than the Work itself), except to the extent that such damage, loss, or expense is due to the fault or negligence of the party seeking indemnity.

§ 10.3.4 The Owner shall not be responsible under this Section 10.3 for hazardous materials or substances the Contractor brings to the site unless such materials or substances are required by the Contract Documents. The Owner shall be responsible for hazardous materials or substances required by the Contract Documents, except to the extent of the Contractor's fault or negligence in the use and handling of such materials or substances.

§ 10.3.5 The Contractor shall reimburse the Owner for the cost and expense the Owner incurs (1) for remediation of hazardous materials or substances the Contractor brings to the site and negligently handles, or (2) where the Contractor fails to perform its obligations under Section 10.3.1, except to the extent that the cost and expense are due to the Owner's fault or negligence.

§ 10.3.6 If, without negligence on the part of the Contractor, the Contractor is held liable by a government agency for the cost of remediation of a hazardous material or substance solely by reason of performing Work as required by the Contract Documents, the Owner shall reimburse the Contractor for all cost and expense thereby incurred.

§ 10.4 Emergencies

In an emergency affecting safety of persons or property, the Contractor shall act, at the Contractor's discretion, to prevent threatened damage, injury, or loss. Additional compensation or extension of time claimed by the Contractor on account of an emergency shall be determined as provided in Article 15 and Article 7.

AIA Document A201 – 2017. Copyright © 1911, 1915, 1918, 1925, 1937, 1951, 1958, 1961, 1963, 1966, 1970, 1976, 1987, 1997, 2007 and 2017. All rights reserved. "The American Institute of Architects," "American Institute of Architects," "AIA," the AIA Logo, and "AIA Contract Documents" are trademarks of The American Institute of Architects. This draft was produced at 14:06:49 ET on 02/16/2024 under Order No.2114457573 which expires on 07/31/2024, is not for resale, is licensed for one-time use only, and may only be used in accordance with the AIA Contract Documents® Terms of Service. To report copyright violations, e-mail docinfo@aiacontracts.com.
User Notes: (1632597836)

ARTICLE 11 INSURANCE AND BONDS

§ 11.1 Contractor's Insurance and Bonds

§ 11.1.1 The Contractor shall purchase and maintain insurance of the types and limits of liability, containing the endorsements, and subject to the terms and conditions, as described in the Agreement or elsewhere in the Contract Documents. The Contractor shall purchase and maintain the required insurance from an insurance company or insurance companies lawfully authorized to issue insurance in the jurisdiction where the Project is located. The Owner, Architect, and Architect's consultants shall be named as additional insureds under the Contractor's commercial general liability policy or as otherwise described in the Contract Documents.

§ 11.1.2 The Contractor shall provide surety bonds of the types, for such penal sums, and subject to such terms and conditions as required by the Contract Documents. The Contractor shall purchase and maintain the required bonds from a company or companies lawfully authorized to issue surety bonds in the jurisdiction where the Project is located.

§ 11.1.3 Upon the request of any person or entity appearing to be a potential beneficiary of bonds covering payment of obligations arising under the Contract, the Contractor shall promptly furnish a copy of the bonds or shall authorize a copy to be furnished.

§ 11.1.4 Notice of Cancellation or Expiration of Contractor's Required Insurance. Within three (3) business days of the date the Contractor becomes aware of an impending or actual cancellation or expiration of any insurance required by the Contract Documents, the Contractor shall provide notice to the Owner of such impending or actual cancellation or expiration. Upon receipt of notice from the Contractor, the Owner shall, unless the lapse in coverage arises from an act or omission of the Owner, have the right to stop the Work until the lapse in coverage has been cured by the procurement of replacement coverage by the Contractor. The furnishing of notice by the Contractor shall not relieve the Contractor of any contractual obligation to provide any required coverage.

§ 11.2 Owner's Insurance

§ 11.2.1 The Owner shall purchase and maintain insurance of the types and limits of liability, containing the endorsements, and subject to the terms and conditions, as described in the Agreement or elsewhere in the Contract Documents. The Owner shall purchase and maintain the required insurance from an insurance company or insurance companies lawfully authorized to issue insurance in the jurisdiction where the Project is located.

§ 11.2.2 Failure to Purchase Required Property Insurance. If the Owner fails to purchase and maintain the required property insurance, with all of the coverages and in the amounts described in the Agreement or elsewhere in the Contract Documents, the Owner shall inform the Contractor in writing prior to commencement of the Work. Upon receipt of notice from the Owner, the Contractor may delay commencement of the Work and may obtain insurance that will protect the interests of the Contractor, Subcontractors, and Sub-Subcontractors in the Work. When the failure to provide coverage has been cured or resolved, the Contract Sum and Contract Time shall be equitably adjusted. In the event the Owner fails to procure coverage, the Owner waives all rights against the Contractor, Subcontractors, and Sub-subcontractors to the extent the loss to the Owner would have been covered by the insurance to have been procured by the Owner. The cost of the insurance shall be charged to the Owner by a Change Order. If the Owner does not provide written notice, and the Contractor is damaged by the failure or neglect of the Owner to purchase or maintain the required insurance, the Owner shall reimburse the Contractor for all reasonable costs and damages attributable thereto.

§ 11.2.3 Notice of Cancellation or Expiration of Owner's Required Property Insurance. Within three (3) business days of the date the Owner becomes aware of an impending or actual cancellation or expiration of any property insurance required by the Contract Documents, the Owner shall provide notice to the Contractor of such impending or actual cancellation or expiration. Unless the lapse in coverage arises from an act or omission of the Contractor: (1) the Contractor, upon receipt of notice from the Owner, shall have the right to stop the Work until the lapse in coverage has been cured by the procurement of replacement coverage by either the Owner or the Contractor; (2) the Contract Time and Contract Sum shall be equitably adjusted; and (3) the Owner waives all rights against the Contractor, Subcontractors, and Sub-subcontractors to the extent any loss to the Owner would have been covered by the insurance had it not expired or been cancelled. If the Contractor purchases replacement coverage, the cost of the insurance shall be charged to the Owner by an appropriate Change Order. The furnishing of notice by the Owner shall not relieve the Owner of any contractual obligation to provide required insurance.

AIA Document A201 – 2017. Copyright © 1911, 1915, 1918, 1925, 1937, 1951, 1958, 1961, 1963, 1966, 1970, 1976, 1987, 1997, 2007 and 2017. All rights reserved. "The American Institute of Architects," "American Institute of Architects," "AIA," the AIA Logo, and "AIA Contract Documents" are trademarks of The American Institute of Architects. This draft was produced at 14:06:49 ET on 02/16/2024 under Order No.2114457573 which expires on 07/31/2024, is not for resale, is licensed for one-time use only, and may only be used in accordance with the AIA Contract Documents® Terms of Service. To report copyright violations, e-mail docinfo@aiacontracts.com.
User Notes: (1632597836)

§ 11.3 Waivers of Subrogation

§ 11.3.1 The Owner and Contractor waive all rights against (1) each other and any of their subcontractors, sub-subcontractors, agents, and employees, each of the other; (2) the Architect and Architect's consultants; and (3) Separate Contractors, if any, and any of their subcontractors, sub-subcontractors, agents, and employees, for damages caused by fire, or other causes of loss, to the extent those losses are covered by property insurance required by the Agreement or other property insurance applicable to the Project, except such rights as they have to proceeds of such insurance. The Owner or Contractor, as appropriate, shall require similar written waivers in favor of the individuals and entities identified above from the Architect, Architect's consultants, Separate Contractors, subcontractors, and sub-subcontractors. The policies of insurance purchased and maintained by each person or entity agreeing to waive claims pursuant to this section 11.3.1 shall not prohibit this waiver of subrogation. This waiver of subrogation shall be effective as to a person or entity (1) even though that person or entity would otherwise have a duty of indemnification, contractual or otherwise, (2) even though that person or entity did not pay the insurance premium directly or indirectly, or (3) whether or not the person or entity had an insurable interest in the damaged property.

§ 11.3.2 If during the Project construction period the Owner insures properties, real or personal or both, at or adjacent to the site by property insurance under policies separate from those insuring the Project, or if after final payment property insurance is to be provided on the completed Project through a policy or policies other than those insuring the Project during the construction period, to the extent permissible by such policies, the Owner waives all rights in accordance with the terms of Section 11.3.1 for damages caused by fire or other causes of loss covered by this separate property insurance.

§ 11.4 Loss of Use, Business Interruption, and Delay in Completion Insurance

The Owner, at the Owner's option, may purchase and maintain insurance that will protect the Owner against loss of use of the Owner's property, or the inability to conduct normal operations, due to fire or other causes of loss. The Owner waives all rights of action against the Contractor and Architect for loss of use of the Owner's property, due to fire or other hazards however caused.

§11.5 Adjustment and Settlement of Insured Loss

§ 11.5.1 A loss insured under the property insurance required by the Agreement shall be adjusted by the Owner as fiduciary and made payable to the Owner as fiduciary for the insureds, as their interests may appear, subject to requirements of any applicable mortgagee clause and of Section 11.5.2. The Owner shall pay the Architect and Contractor their just shares of insurance proceeds received by the Owner, and by appropriate agreements the Architect and Contractor shall make payments to their consultants and Subcontractors in similar manner.

§ 11.5.2 Prior to settlement of an insured loss, the Owner shall notify the Contractor of the terms of the proposed settlement as well as the proposed allocation of the insurance proceeds. The Contractor shall have 14 days from receipt of notice to object to the proposed settlement or allocation of the proceeds. If the Contractor does not object, the Owner shall settle the loss and the Contractor shall be bound by the settlement and allocation. Upon receipt, the Owner shall deposit the insurance proceeds in a separate account and make the appropriate distributions. Thereafter, if no other agreement is made or the Owner does not terminate the Contract for convenience, the Owner and Contractor shall execute a Change Order for reconstruction of the damaged or destroyed Work in the amount allocated for that purpose. If the Contractor timely objects to either the terms of the proposed settlement or the allocation of the proceeds, the Owner may proceed to settle the insured loss, and any dispute between the Owner and Contractor arising out of the settlement or allocation of the proceeds shall be resolved pursuant to Article 15. Pending resolution of any dispute, the Owner may issue a Construction Change Directive for the reconstruction of the damaged or destroyed Work.

ARTICLE 12 UNCOVERING AND CORRECTION OF WORK

§ 12.1 Uncovering of Work

§ 12.1.1 If a portion of the Work is covered contrary to the Architect's request or to requirements specifically expressed in the Contract Documents, it must, if requested in writing by the Architect, be uncovered for the Architect's examination and be replaced at the Contractor's expense without change in the Contract Time.

§ 12.1.2 If a portion of the Work has been covered that the Architect has not specifically requested to examine prior to its being covered, the Architect may request to see such Work and it shall be uncovered by the Contractor. If such Work is in accordance with the Contract Documents, the Contractor shall be entitled to an equitable adjustment to

AIA Document A201 – 2017. Copyright © 1911, 1915, 1918, 1925, 1937, 1951, 1958, 1961, 1963, 1966, 1970, 1976, 1987, 1997, 2007 and 2017. All rights reserved. "The American Institute of Architects," "American Institute of Architects," "AIA," the AIA Logo, and "AIA Contract Documents" are trademarks of The American Institute of Architects. This draft was produced at 14:06:49 ET on 02/16/2024 under Order No.2114457573 which expires on 07/31/2024, is not for resale, is licensed for one-time use only, and may only be used in accordance with the AIA Contract Documents® Terms of Service. To report copyright violations, e-mail docinfo@aiacontracts.com.
User Notes: (1632597836)

the Contract Sum and Contract Time as may be appropriate. If such Work is not in accordance with the Contract Documents, the costs of uncovering the Work, and the cost of correction, shall be at the Contractor's expense.

§ 12.2 Correction of Work

§ 12.2.1 Before Substantial Completion

The Contractor shall promptly correct Work rejected by the Architect or failing to conform to the requirements of the Contract Documents, discovered before Substantial Completion and whether or not fabricated, installed or completed. Costs of correcting such rejected Work, including additional testing and inspections, the cost of uncovering and replacement, and compensation for the Architect's services and expenses made necessary thereby, shall be at the Contractor's expense.

§ 12.2.2 After Substantial Completion

§ 12.2.2.1 In addition to the Contractor's obligations under Section 3.5, if, within one year after the date of Substantial Completion of the Work or designated portion thereof or after the date for commencement of warranties established under Section 9.9.1, or by terms of any applicable special warranty required by the Contract Documents, any of the Work is found to be not in accordance with the requirements of the Contract Documents, the Contractor shall correct it promptly after receipt of notice from the Owner to do so, unless the Owner has previously given the Contractor a written acceptance of such condition. The Owner shall give such notice promptly after discovery of the condition. During the one-year period for correction of Work, if the Owner fails to notify the Contractor and give the Contractor an opportunity to make the correction, the Owner waives the rights to require correction by the Contractor and to make a claim for breach of warranty. If the Contractor fails to correct nonconforming Work within a reasonable time during that period after receipt of notice from the Owner or Architect, the Owner may correct it in accordance with Section 2.5.

§ 12.2.2.2 The one-year period for correction of Work shall be extended with respect to portions of Work first performed after Substantial Completion by the period of time between Substantial Completion and the actual completion of that portion of the Work.

§ 12.2.2.3 The one-year period for correction of Work shall not be extended by corrective Work performed by the Contractor pursuant to this Section 12.2.

§ 12.2.3 The Contractor shall remove from the site portions of the Work that are not in accordance with the requirements of the Contract Documents and are neither corrected by the Contractor nor accepted by the Owner.

§ 12.2.4 The Contractor shall bear the cost of correcting destroyed or damaged construction of the Owner or Separate Contractors, whether completed or partially completed, caused by the Contractor's correction or removal of Work that is not in accordance with the requirements of the Contract Documents.

§ 12.2.5 Nothing contained in this Section 12.2 shall be construed to establish a period of limitation with respect to other obligations the Contractor has under the Contract Documents. Establishment of the one-year period for correction of Work as described in Section 12.2.2 relates only to the specific obligation of the Contractor to correct the Work, and has no relationship to the time within which the obligation to comply with the Contract Documents may be sought to be enforced, nor to the time within which proceedings may be commenced to establish the Contractor's liability with respect to the Contractor's obligations other than specifically to correct the Work.

§ 12.3 Acceptance of Nonconforming Work

If the Owner prefers to accept Work that is not in accordance with the requirements of the Contract Documents, the Owner may do so instead of requiring its removal and correction, in which case the Contract Sum will be reduced as appropriate and equitable. Such adjustment shall be effected whether or not final payment has been made.

ARTICLE 13 MISCELLANEOUS PROVISIONS

§ 13.1 Governing Law

The Contract shall be governed by the law of the place where the Project is located, excluding that jurisdiction's choice of law rules. If the parties have selected arbitration as the method of binding dispute resolution, the Federal Arbitration Act shall govern Section 15.4.

AIA Document A201 – 2017. Copyright © 1911, 1915, 1918, 1925, 1937, 1951, 1958, 1961, 1963, 1966, 1970, 1976, 1987, 1997, 2007 and 2017. All rights reserved. "The American Institute of Architects," "American Institute of Architects," "AIA," the AIA Logo, and "AIA Contract Documents" are trademarks of The American Institute of Architects. This draft was produced at 14:06:49 ET on 02/16/2024 under Order No.2114457573 which expires on 07/31/2024, is not for resale, is licensed for one-time use only, and may only be used in accordance with the AIA Contract Documents® Terms of Service. To report copyright violations, e-mail docinfo@aiacontracts.com.
User Notes: (1632597836)

§ 13.2 Successors and Assigns

§ 13.2.1 The Owner and Contractor respectively bind themselves, their partners, successors, assigns, and legal representatives to covenants, agreements, and obligations contained in the Contract Documents. Except as provided in Section 13.2.2, neither party to the Contract shall assign the Contract as a whole without written consent of the other. If either party attempts to make an assignment without such consent, that party shall nevertheless remain legally responsible for all obligations under the Contract.

§ 13.2.2 The Owner may, without consent of the Contractor, assign the Contract to a lender providing construction financing for the Project, if the lender assumes the Owner's rights and obligations under the Contract Documents. The Contractor shall execute all consents reasonably required to facilitate the assignment.

§ 13.3 Rights and Remedies

§ 13.3.1 Duties and obligations imposed by the Contract Documents and rights and remedies available thereunder shall be in addition to and not a limitation of duties, obligations, rights, and remedies otherwise imposed or available by law.

§ 13.3.2 No action or failure to act by the Owner, Architect, or Contractor shall constitute a waiver of a right or duty afforded them under the Contract, nor shall such action or failure to act constitute approval of or acquiescence in a breach thereunder, except as may be specifically agreed upon in writing.

§ 13.4 Tests and Inspections

§ 13.4.1 Tests, inspections, and approvals of portions of the Work shall be made as required by the Contract Documents and by applicable laws, statutes, ordinances, codes, rules, and regulations or lawful orders of public authorities. Unless otherwise provided, the Contractor shall make arrangements for such tests, inspections, and approvals with an independent testing laboratory or entity acceptable to the Owner, or with the appropriate public authority, and shall bear all related costs of tests, inspections, and approvals. The Contractor shall give the Architect timely notice of when and where tests and inspections are to be made so that the Architect may be present for such procedures. The Owner shall bear costs of tests, inspections, or approvals that do not become requirements until after bids are received or negotiations concluded. The Owner shall directly arrange and pay for tests, inspections, or approvals where building codes or applicable laws or regulations so require.

§ 13.4.2 If the Architect, Owner, or public authorities having jurisdiction determine that portions of the Work require additional testing, inspection, or approval not included under Section 13.4.1, the Architect will, upon written authorization from the Owner, instruct the Contractor to make arrangements for such additional testing, inspection, or approval, by an entity acceptable to the Owner, and the Contractor shall give timely notice to the Architect of when and where tests and inspections are to be made so that the Architect may be present for such procedures. Such costs, except as provided in Section 13.4.3, shall be at the Owner's expense.

§ 13.4.3 If procedures for testing, inspection, or approval under Sections 13.4.1 and 13.4.2 reveal failure of the portions of the Work to comply with requirements established by the Contract Documents, all costs made necessary by such failure, including those of repeated procedures and compensation for the Architect's services and expenses, shall be at the Contractor's expense.

§ 13.4.4 Required certificates of testing, inspection, or approval shall, unless otherwise required by the Contract Documents, be secured by the Contractor and promptly delivered to the Architect.

§ 13.4.5 If the Architect is to observe tests, inspections, or approvals required by the Contract Documents, the Architect will do so promptly and, where practicable, at the normal place of testing.

§ 13.4.6 Tests or inspections conducted pursuant to the Contract Documents shall be made promptly to avoid unreasonable delay in the Work.

§ 13.5 Interest

Payments due and unpaid under the Contract Documents shall bear interest from the date payment is due at the rate the parties agree upon in writing or, in the absence thereof, at the legal rate prevailing from time to time at the place where the Project is located.

AIA Document A201 – 2017. Copyright © 1911, 1915, 1918, 1925, 1937, 1951, 1958, 1961, 1963, 1966, 1970, 1976, 1987, 1997, 2007 and 2017. All rights reserved. "The American Institute of Architects," "American Institute of Architects," "AIA," the AIA Logo, and "AIA Contract Documents" are trademarks of The American Institute of Architects. This draft was produced at 14:06:49 ET on 02/16/2024 under Order No.2114457573 which expires on 07/31/2024, is not for resale, is licensed for one-time use only, and may only be used in accordance with the AIA Contract Documents® Terms of Service. To report copyright violations, e-mail docinfo@aiacontracts.com.
User Notes: (1632597836)

ARTICLE 14 TERMINATION OR SUSPENSION OF THE CONTRACT

§ 14.1 Termination by the Contractor

§ 14.1.1 The Contractor may terminate the Contract if the Work is stopped for a period of 30 consecutive days through no act or fault of the Contractor, a Subcontractor, a Sub-subcontractor, their agents or employees, or any other persons or entities performing portions of the Work, for any of the following reasons:

- **.1** Issuance of an order of a court or other public authority having jurisdiction that requires all Work to be stopped;
- **.2** An act of government, such as a declaration of national emergency, that requires all Work to be stopped;
- **.3** Because the Architect has not issued a Certificate for Payment and has not notified the Contractor of the reason for withholding certification as provided in Section 9.4.1, or because the Owner has not made payment on a Certificate for Payment within the time stated in the Contract Documents; or
- **.4** The Owner has failed to furnish to the Contractor reasonable evidence as required by Section 2.2.

§ 14.1.2 The Contractor may terminate the Contract if, through no act or fault of the Contractor, a Subcontractor, a Sub-subcontractor, their agents or employees, or any other persons or entities performing portions of the Work, repeated suspensions, delays, or interruptions of the entire Work by the Owner as described in Section 14.3, constitute in the aggregate more than 100 percent of the total number of days scheduled for completion, or 120 days in any 365-day period, whichever is less.

§ 14.1.3 If one of the reasons described in Section 14.1.1 or 14.1.2 exists, the Contractor may, upon seven days' notice to the Owner and Architect, terminate the Contract and recover from the Owner payment for Work executed, as well as reasonable overhead and profit on Work not executed, and costs incurred by reason of such termination.

§ 14.1.4 If the Work is stopped for a period of 60 consecutive days through no act or fault of the Contractor, a Subcontractor, a Sub-subcontractor, or their agents or employees or any other persons or entities performing portions of the Work because the Owner has repeatedly failed to fulfill the Owner's obligations under the Contract Documents with respect to matters important to the progress of the Work, the Contractor may, upon seven additional days' notice to the Owner and the Architect, terminate the Contract and recover from the Owner as provided in Section 14.1.3.

§ 14.2 Termination by the Owner for Cause

§ 14.2.1 The Owner may terminate the Contract if the Contractor

- **.1** repeatedly refuses or fails to supply enough properly skilled workers or proper materials;
- **.2** fails to make payment to Subcontractors or suppliers in accordance with the respective agreements between the Contractor and the Subcontractors or suppliers;
- **.3** repeatedly disregards applicable laws, statutes, ordinances, codes, rules and regulations, or lawful orders of a public authority; or
- **.4** otherwise is guilty of substantial breach of a provision of the Contract Documents.

§ 14.2.2 When any of the reasons described in Section 14.2.1 exist, and upon certification by the Architect that sufficient cause exists to justify such action, the Owner may, without prejudice to any other rights or remedies of the Owner and after giving the Contractor and the Contractor's surety, if any, seven days' notice, terminate employment of the Contractor and may, subject to any prior rights of the surety:

- **.1** Exclude the Contractor from the site and take possession of all materials, equipment, tools, and construction equipment and machinery thereon owned by the Contractor;
- **.2** Accept assignment of subcontracts pursuant to Section 5.4; and
- **.3** Finish the Work by whatever reasonable method the Owner may deem expedient. Upon written request of the Contractor, the Owner shall furnish to the Contractor a detailed accounting of the costs incurred by the Owner in finishing the Work.

§ 14.2.3 When the Owner terminates the Contract for one of the reasons stated in Section 14.2.1, the Contractor shall not be entitled to receive further payment until the Work is finished.

§ 14.2.4 If the unpaid balance of the Contract Sum exceeds costs of finishing the Work, including compensation for the Architect's services and expenses made necessary thereby, and other damages incurred by the Owner and not expressly waived, such excess shall be paid to the Contractor. If such costs and damages exceed the unpaid balance,

AIA Document A201 – 2017. Copyright © 1911, 1915, 1918, 1925, 1937, 1951, 1958, 1961, 1963, 1966, 1970, 1976, 1987, 1997, 2007 and 2017. All rights reserved. "The American Institute of Architects," "American Institute of Architects," "AIA," the AIA Logo, and "AIA Contract Documents" are trademarks of The American Institute of Architects. This draft was produced at 14:06:49 ET on 02/16/2024 under Order No.2114457573 which expires on 07/31/2024, is not for resale, is licensed for one-time use only, and may only be used in accordance with the AIA Contract Documents® Terms of Service. To report copyright violations, e-mail docinfo@aiacontracts.com.
User Notes: (1632597836)

the Contractor shall pay the difference to the Owner. The amount to be paid to the Contractor or Owner, as the case may be, shall be certified by the Initial Decision Maker, upon application, and this obligation for payment shall survive termination of the Contract.

§ 14.3 Suspension by the Owner for Convenience

§ 14.3.1 The Owner may, without cause, order the Contractor in writing to suspend, delay or interrupt the Work, in whole or in part for such period of time as the Owner may determine.

§ 14.3.2 The Contract Sum and Contract Time shall be adjusted for increases in the cost and time caused by suspension, delay, or interruption under Section 14.3.1. Adjustment of the Contract Sum shall include profit. No adjustment shall be made to the extent

.1 that performance is, was, or would have been, so suspended, delayed, or interrupted, by another cause for which the Contractor is responsible; or

.2 that an equitable adjustment is made or denied under another provision of the Contract.

§ 14.4 Termination by the Owner for Convenience

§ 14.4.1 The Owner may, at any time, terminate the Contract for the Owner's convenience and without cause.

§ 14.4.2 Upon receipt of notice from the Owner of such termination for the Owner's convenience, the Contractor shall

.1 cease operations as directed by the Owner in the notice;

.2 take actions necessary, or that the Owner may direct, for the protection and preservation of the Work; and

.3 except for Work directed to be performed prior to the effective date of termination stated in the notice, terminate all existing subcontracts and purchase orders and enter into no further subcontracts and purchase orders.

§ 14.4.3 In case of such termination for the Owner's convenience, the Owner shall pay the Contractor for Work properly executed; costs incurred by reason of the termination, including costs attributable to termination of Subcontracts; and the termination fee, if any, set forth in the Agreement.

ARTICLE 15 CLAIMS AND DISPUTES

§ 15.1 Claims

§ 15.1.1 Definition

A Claim is a demand or assertion by one of the parties seeking, as a matter of right, payment of money, a change in the Contract Time, or other relief with respect to the terms of the Contract. The term "Claim" also includes other disputes and matters in question between the Owner and Contractor arising out of or relating to the Contract. The responsibility to substantiate Claims shall rest with the party making the Claim. This Section 15.1.1 does not require the Owner to file a Claim in order to impose liquidated damages in accordance with the Contract Documents.

§ 15.1.2 Time Limits on Claims

The Owner and Contractor shall commence all Claims and causes of action against the other and arising out of or related to the Contract, whether in contract, tort, breach of warranty or otherwise, in accordance with the requirements of the binding dispute resolution method selected in the Agreement and within the period specified by applicable law, but in any case not more than 10 years after the date of Substantial Completion of the Work. The Owner and Contractor waive all Claims and causes of action not commenced in accordance with this Section 15.1.2.

§ 15.1.3 Notice of Claims

§ 15.1.3.1 Claims by either the Owner or Contractor, where the condition giving rise to the Claim is first discovered prior to expiration of the period for correction of the Work set forth in Section 12.2.2, shall be initiated by notice to the other party and to the Initial Decision Maker with a copy sent to the Architect, if the Architect is not serving as the Initial Decision Maker. Claims by either party under this Section 15.1.3.1 shall be initiated within 21 days after occurrence of the event giving rise to such Claim or within 21 days after the claimant first recognizes the condition giving rise to the Claim, whichever is later.

AIA Document A201 – 2017. Copyright © 1911, 1915, 1918, 1925, 1937, 1951, 1958, 1961, 1963, 1966, 1970, 1976, 1987, 1997, 2007 and 2017. All rights reserved. "The American Institute of Architects," "American Institute of Architects," "AIA," the AIA Logo, and "AIA Contract Documents" are trademarks of The American Institute of Architects. This draft was produced at 14:06:49 ET on 02/16/2024 under Order No.2114457573 which expires on 07/31/2024, is not for resale, is licensed for one-time use only, and may only be used in accordance with the AIA Contract Documents® Terms of Service. To report copyright violations, e-mail docinfo@aiacontracts.com.
User Notes: (1632597836)

§ 15.1.3.2 Claims by either the Owner or Contractor, where the condition giving rise to the Claim is first discovered after expiration of the period for correction of the Work set forth in Section 12.2.2, shall be initiated by notice to the other party. In such event, no decision by the Initial Decision Maker is required.

§ 15.1.4 Continuing Contract Performance

§ 15.1.4.1 Pending final resolution of a Claim, except as otherwise agreed in writing or as provided in Section 9.7 and Article 14, the Contractor shall proceed diligently with performance of the Contract and the Owner shall continue to make payments in accordance with the Contract Documents.

§ 15.1.4.2 The Contract Sum and Contract Time shall be adjusted in accordance with the Initial Decision Maker's decision, subject to the right of either party to proceed in accordance with this Article 15. The Architect will issue Certificates for Payment in accordance with the decision of the Initial Decision Maker.

§ 15.1.5 Claims for Additional Cost

If the Contractor wishes to make a Claim for an increase in the Contract Sum, notice as provided in Section 15.1.3 shall be given before proceeding to execute the portion of the Work that is the subject of the Claim. Prior notice is not required for Claims relating to an emergency endangering life or property arising under Section 10.4.

§ 15.1.6 Claims for Additional Time

§ 15.1.6.1 If the Contractor wishes to make a Claim for an increase in the Contract Time, notice as provided in Section 15.1.3 shall be given. The Contractor's Claim shall include an estimate of cost and of probable effect of delay on progress of the Work. In the case of a continuing delay, only one Claim is necessary.

§ 15.1.6.2 If adverse weather conditions are the basis for a Claim for additional time, such Claim shall be documented by data substantiating that weather conditions were abnormal for the period of time, could not have been reasonably anticipated, and had an adverse effect on the scheduled construction.

§ 15.1.7 Waiver of Claims for Consequential Damages

The Contractor and Owner waive Claims against each other for consequential damages arising out of or relating to this Contract. This mutual waiver includes

- **.1** damages incurred by the Owner for rental expenses, for losses of use, income, profit, financing, business and reputation, and for loss of management or employee productivity or of the services of such persons; and
- **.2** damages incurred by the Contractor for principal office expenses including the compensation of personnel stationed there, for losses of financing, business and reputation, and for loss of profit, except anticipated profit arising directly from the Work.

This mutual waiver is applicable, without limitation, to all consequential damages due to either party's termination in accordance with Article 14. Nothing contained in this Section 15.1.7 shall be deemed to preclude assessment of liquidated damages, when applicable, in accordance with the requirements of the Contract Documents.

§ 15.2 Initial Decision

§ 15.2.1 Claims, excluding those where the condition giving rise to the Claim is first discovered after expiration of the period for correction of the Work set forth in Section 12.2.2 or arising under Sections 10.3, 10.4, and 11.5, shall be referred to the Initial Decision Maker for initial decision. The Architect will serve as the Initial Decision Maker, unless otherwise indicated in the Agreement. Except for those Claims excluded by this Section 15.2.1, an initial decision shall be required as a condition precedent to mediation of any Claim. If an initial decision has not been rendered within 30 days after the Claim has been referred to the Initial Decision Maker, the party asserting the Claim may demand mediation and binding dispute resolution without a decision having been rendered. Unless the Initial Decision Maker and all affected parties agree, the Initial Decision Maker will not decide disputes between the Contractor and persons or entities other than the Owner.

§ 15.2.2 The Initial Decision Maker will review Claims and within ten days of the receipt of a Claim take one or more of the following actions: (1) request additional supporting data from the claimant or a response with supporting data from the other party, (2) reject the Claim in whole or in part, (3) approve the Claim, (4) suggest a compromise, or (5) advise the parties that the Initial Decision Maker is unable to resolve the Claim if the Initial Decision Maker lacks sufficient information to evaluate the merits of the Claim or if the Initial Decision Maker concludes that, in the

AIA Document A201 – 2017. Copyright © 1911, 1915, 1918, 1925, 1937, 1951, 1958, 1961, 1963, 1966, 1970, 1976, 1987, 1997, 2007 and 2017. All rights reserved. "The American Institute of Architects," "American Institute of Architects," "AIA," the AIA Logo, and "AIA Contract Documents" are trademarks of The American Institute of Architects. This draft was produced at 14:06:49 ET on 02/16/2024 under Order No.2114457573 which expires on 07/31/2024, is not for resale, is licensed for one-time use only, and may only be used in accordance with the AIA Contract Documents® Terms of Service. To report copyright violations, e-mail docinfo@aiacontracts.com.
User Notes: (1632597836)

Initial Decision Maker's sole discretion, it would be inappropriate for the Initial Decision Maker to resolve the Claim.

§ 15.2.3 In evaluating Claims, the Initial Decision Maker may, but shall not be obligated to, consult with or seek information from either party or from persons with special knowledge or expertise who may assist the Initial Decision Maker in rendering a decision. The Initial Decision Maker may request the Owner to authorize retention of such persons at the Owner's expense.

§ 15.2.4 If the Initial Decision Maker requests a party to provide a response to a Claim or to furnish additional supporting data, such party shall respond, within ten days after receipt of the request, and shall either (1) provide a response on the requested supporting data, (2) advise the Initial Decision Maker when the response or supporting data will be furnished, or (3) advise the Initial Decision Maker that no supporting data will be furnished. Upon receipt of the response or supporting data, if any, the Initial Decision Maker will either reject or approve the Claim in whole or in part.

§ 15.2.5 The Initial Decision Maker will render an initial decision approving or rejecting the Claim, or indicating that the Initial Decision Maker is unable to resolve the Claim. This initial decision shall (1) be in writing; (2) state the reasons therefor; and (3) notify the parties and the Architect, if the Architect is not serving as the Initial Decision Maker, of any change in the Contract Sum or Contract Time or both. The initial decision shall be final and binding on the parties but subject to mediation and, if the parties fail to resolve their dispute through mediation, to binding dispute resolution.

§ 15.2.6 Either party may file for mediation of an initial decision at any time, subject to the terms of Section 15.2.6.1.

§ 15.2.6.1 Either party may, within 30 days from the date of receipt of an initial decision, demand in writing that the other party file for mediation. If such a demand is made and the party receiving the demand fails to file for mediation within 30 days after receipt thereof, then both parties waive their rights to mediate or pursue binding dispute resolution proceedings with respect to the initial decision.

§ 15.2.7 In the event of a Claim against the Contractor, the Owner may, but is not obligated to, notify the surety, if any, of the nature and amount of the Claim. If the Claim relates to a possibility of a Contractor's default, the Owner may, but is not obligated to, notify the surety and request the surety's assistance in resolving the controversy.

§ 15.2.8 If a Claim relates to or is the subject of a mechanic's lien, the party asserting such Claim may proceed in accordance with applicable law to comply with the lien notice or filing deadlines.

§ 15.3 Mediation

§ 15.3.1 Claims, disputes, or other matters in controversy arising out of or related to the Contract, except those waived as provided for in Sections 9.10.4, 9.10.5, and 15.1.7, shall be subject to mediation as a condition precedent to binding dispute resolution.

§ 15.3.2 The parties shall endeavor to resolve their Claims by mediation which, unless the parties mutually agree otherwise, shall be administered by the American Arbitration Association in accordance with its Construction Industry Mediation Procedures in effect on the date of the Agreement. A request for mediation shall be made in writing, delivered to the other party to the Contract, and filed with the person or entity administering the mediation. The request may be made concurrently with the filing of binding dispute resolution proceedings but, in such event, mediation shall proceed in advance of binding dispute resolution proceedings, which shall be stayed pending mediation for a period of 60 days from the date of filing, unless stayed for a longer period by agreement of the parties or court order. If an arbitration is stayed pursuant to this Section 15.3.2, the parties may nonetheless proceed to the selection of the arbitrator(s) and agree upon a schedule for later proceedings.

§ 15.3.3 Either party may, within 30 days from the date that mediation has been concluded without resolution of the dispute or 60 days after mediation has been demanded without resolution of the dispute, demand in writing that the other party file for binding dispute resolution. If such a demand is made and the party receiving the demand fails to file for binding dispute resolution within 60 days after receipt thereof, then both parties waive their rights to binding dispute resolution proceedings with respect to the initial decision.

AIA Document A201 – 2017. Copyright © 1911, 1915, 1918, 1925, 1937, 1951, 1958, 1961, 1963, 1966, 1970, 1976, 1987, 1997, 2007 and 2017. All rights reserved. "The American Institute of Architects," "American Institute of Architects," "AIA," the AIA Logo, and "AIA Contract Documents" are trademarks of The American Institute of Architects. This draft was produced at 14:06:49 ET on 02/16/2024 under Order No.2114457573 which expires on 07/31/2024, is not for resale, is licensed for one-time use only, and may only be used in accordance with the AIA Contract Documents® Terms of Service. To report copyright violations, e-mail docinfo@aiacontracts.com.
User Notes: (1632597836)

§ 15.3.4 The parties shall share the mediator's fee and any filing fees equally. The mediation shall be held in the place where the Project is located, unless another location is mutually agreed upon. Agreements reached in mediation shall be enforceable as settlement agreements in any court having jurisdiction thereof.

§ 15.4 Arbitration

§ 15.4.1 If the parties have selected arbitration as the method for binding dispute resolution in the Agreement, any Claim subject to, but not resolved by, mediation shall be subject to arbitration which, unless the parties mutually agree otherwise, shall be administered by the American Arbitration Association in accordance with its Construction Industry Arbitration Rules in effect on the date of the Agreement. The Arbitration shall be conducted in the place where the Project is located, unless another location is mutually agreed upon. A demand for arbitration shall be made in writing, delivered to the other party to the Contract, and filed with the person or entity administering the arbitration. The party filing a notice of demand for arbitration must assert in the demand all Claims then known to that party on which arbitration is permitted to be demanded.

§ 15.4.1.1 A demand for arbitration shall be made no earlier than concurrently with the filing of a request for mediation, but in no event shall it be made after the date when the institution of legal or equitable proceedings based on the Claim would be barred by the applicable statute of limitations. For statute of limitations purposes, receipt of a written demand for arbitration by the person or entity administering the arbitration shall constitute the institution of legal or equitable proceedings based on the Claim.

§ 15.4.2 The award rendered by the arbitrator or arbitrators shall be final, and judgment may be entered upon it in accordance with applicable law in any court having jurisdiction thereof.

§ 15.4.3 The foregoing agreement to arbitrate and other agreements to arbitrate with an additional person or entity duly consented to by parties to the Agreement, shall be specifically enforceable under applicable law in any court having jurisdiction thereof.

§ 15.4.4 Consolidation or Joinder

§ 15.4.4.1 Subject to the rules of the American Arbitration Association or other applicable arbitration rules, either party may consolidate an arbitration conducted under this Agreement with any other arbitration to which it is a party provided that (1) the arbitration agreement governing the other arbitration permits consolidation, (2) the arbitrations to be consolidated substantially involve common questions of law or fact, and (3) the arbitrations employ materially similar procedural rules and methods for selecting arbitrator(s).

§ 15.4.4.2 Subject to the rules of the American Arbitration Association or other applicable arbitration rules, either party may include by joinder persons or entities substantially involved in a common question of law or fact whose presence is required if complete relief is to be accorded in arbitration, provided that the party sought to be joined consents in writing to such joinder. Consent to arbitration involving an additional person or entity shall not constitute consent to arbitration of any claim, dispute or other matter in question not described in the written consent.

§ 15.4.4.3 The Owner and Contractor grant to any person or entity made a party to an arbitration conducted under this Section 15.4, whether by joinder or consolidation, the same rights of joinder and consolidation as those of the Owner and Contractor under this Agreement.

AIA Document A201 – 2017. Copyright © 1911, 1915, 1918, 1925, 1937, 1951, 1958, 1961, 1963, 1966, 1970, 1976, 1987, 1997, 2007 and 2017. All rights reserved. "The American Institute of Architects," "American Institute of Architects," "AIA," the AIA Logo, and "AIA Contract Documents" are trademarks of The American Institute of Architects. This draft was produced at 14:06:49 ET on 02/16/2024 under Order No.2114457573 which expires on 07/31/2024, is not for resale, is licensed for one-time use only, and may only be used in accordance with the AIA Contract Documents® Terms of Service. To report copyright violations, e-mail docinfo@aiacontracts.com.
User Notes: (1632597836)

End of Solicitation Documents

Reference Provider Name: Jack Davis

Company: Orange County Contact Information: jack.davis@ocfl.net

Reference provided for (Firm Name): SA Casey Construction

1) Describe the scope of work of the contract awarded by your company to this firm.

SA Casey has completed multiple projects and is currently active on several others. Scopes of work consist(ed) of interior renovations (framing, electrical, plumbing, low voltage, flooring, paint, etc.) as well as new buildings (civil, structural, roofing, etc.)

2) Were you satisfied with the final product of this project? ☑ Yes ☐ No
If not, please provide details of any deficiencies below:

3) Did the contractor communicate well with you (respond in timely manner to calls, requests, etc.)?

☑ Yes ☐ No

4) Was the project completed on time and within budget? ☑ Yes ☐ No

5) How was your experience working with this contractor? What frustrations, if any, did you have working with the contractor?

Communication with SA Casey's staff is never an issue. While all construction projects have their "frustrations", SA Casey is always available for phone conversations and on site meetings to work through any issues that arise.

6) If you had a warranty repair/replacement, was it handled promptly and to your satisfaction?

☑ Yes ☐ No

7) Overall, would you recommend this contractor? ☑ Yes ☐ No

8) Additional comments?

I am never disappointed when SA Casey wins the bid on one of my projects. They have, and continue to deliver successful construction projects.

CITY OF PORT ORANGE
PURCHASING DIVISION
1000 CITY CENTER CIRCLE
PORT ORANGE, FLORIDA 32129
TELEPHONE 386-506-5718
purchdiv@port-orange.org

ADDENDUM # 1
January 6, 2025

ITB #25-02 CONSTRUCTION OF FORESTRY BUILDING

To All Bidders:

The following changes, clarifications and additions are hereby made part of the ITB for the above referenced project dated December 13, 2024 and prepared by the City of Port Orange Purchasing Division as fully and completely as if the same were fully set forth therein. It is the sole responsibility of the bidder to confirm that all addenda have been received prior to submitting a bid and acknowledge such in the ITB documents.

A. CLARIFICATIONS:
None

B. CHANGES TO ITB DOCUMENT:
None

C. QUESTIONS AND ANSWERS:

Question #1
What exactly is the height of the building for the PEMB?
Answer #1
The eave height for the new building is 14'7".

In all other respects, except as specifically stated herein, the subject ITB #25-02 Construction of Forestry Building remains unchanged.

END OF ADDENDUM #1

CITY COUNCIL AGENDA ITEM

COUNCIL MEETING DATE 3/18/2025

SUBJECT: (D6c) Approval of Task Authorization No. 21 - with Kimley Horn & Associates, Inc. for Construction Phase Services for ITB #25-02 - Lowes Gateway Lift Station Rehabilitation

DEPARTMENT: Engineering

GOAL: 2 - Infrastructure

RECOMMENDED MOTION: Move to approve Task Authorization No. 21 with Kimley-Horn & Associates, Inc. (CA7763) as it relates to Lowes Gateway Lift Station Construction Phase Services for an amount not to exceed $77,359.00; and authorize the Mayor and City Clerk to execute all contract required documents.

SUMMARY: The Engineering Department is requesting approval of Task Authorization (TA) No. 21 with Kimley-Horn & Associates, Inc. under the Master Contract for Engineering and Environmental Services (CA7763) as it relates to Lowes Gateway Lift Station Construction Phase Services for the amount of $77,359.

The wastewater transmission system improvement project for the Lowes Gateway Lift Station aims to upgrade the station's mechanical, electrical, and site components to ensure the continuous and efficient collection and transmission of wastewater. The lift station, constructed in 1999, has not undergone any upgrades since its initial construction. As a result, it is now part of a program to systematically update and upgrade the city's aging sanitary sewer lift stations.

The primary goal of this project is to enhance the reliability and functionality of the lift station to avoid disruptions in the wastewater collection and transmission process. By modernizing the station with new technology and equipment, the city can address potential issues that may arise due to aging infrastructure. Additionally, upgrading the lift station is a proactive approach to maintain the overall efficiency and effectiveness of the city's wastewater transmission system.

Kimley-Horn, Inc. is the Engineer of Record for the Lowes Gateway Lift Station Rehabilitation Project and will be providing the construction phase services.

The completion date of TA No. 21 will be 420 days from the Notice to Proceed. This TA will run concurrent with the construction contract with RCM Utilities, Inc. with additional time after construction to allow for closeout items.

PRESENTER: Junos Reed

ATTACHMENTS:

1.	Kimley-Horn and Associates, Inc. - Task Authorization No 21 - Lowes Gateway Construction Phase Services	Kimley-Horn and Associates, Inc. - Task Authorization No 21 - Lowes Gateway Construction Phase Services.pdf
2.	Lowes LS CA services_final	Lowes LS CA services_final.pdf
3.	Executed Kimley-Horn Renewal form 1-14-2025	Executed Kimley-Horn Renewal form 1-14-2025.pdf
4.	Kimley-Horn Contract CA7763	Kimley-Horn Contract CA7763.pdf
5.	Kimley-Horn and Associates, Inc. ALL 4.1.2025	Kimley-Horn and Associates, Inc. ALL 4.1.2025.pdf
6.	Kimely Horn - Affidavit for Human Trafficking_08.29.2024	Kimely Horn - Affidavit for Human Trafficking_08.29.2024.pdf

Julia Wiggins	Created/Initiated - 2/11/2025
Richard Colby	Approved - 2/11/2025
Junos Reed	Approved - 2/12/2025
Linda Truitt	Approved - 2/12/2025
Matthew Jones	Approved - 2/28/2025
Wayne Clark	Final Approval - 3/7/2025

TASK AUTHORIZATION NO. 21
Master Contract for Services dated January 18,2022
Between the City of Port Orange, Florida and Kimley-Horn and Associates, Inc.

THIS Task Authorization is entered into by and between the **CITY OF PORT ORANGE, FLORIDA**, a chartered municipal corporation with its principal place of business at 1000 City Center Circle, Port Orange, Florida 32129 (the "City") and **KIMLEY-HORN AND ASSOCIATES, INC.**, North Carolina corporation, registered to transact business in Florida, with its principal place of business at 421 Fayetteville Street, Suite 600, Raleigh, North Carolina 27601 ("Engineer"), and hereinafter collectively referred to as the "Parties," and is to that certain Master Contract relating to Professional Engineering Services for Public Works, Utilities and Environmental Services, as dated above, and any amendments thereto, hereinafter collectively referred to as the "Contract." The Parties, in exchange for the mutual covenants contained herein and in the Contract, agree as follows:

1. This Task Authorization expressly modifies the Contract and in the event of a conflict, the terms and conditions of this Task Authorization shall prevail.

2. In addition to all other terms and conditions contained in the Contract, Engineer shall provide services relating to Lowes / Gateway Lift Station Construction Phase Services, as more particularly described in the Scope of Servicesattached hereto and incorporated herein as Task Authorization Exhibit "1."

3. Engineer shall complete the services to be provided herein within 420 days of the date ofwritten notice by the City to the Engineer.

4. In return for the services identified above, the City agrees to compensate Engineer at the prices set forth in Exhibit "1" attached hereto and made a part hereof, subject to a limit not to exceed **$77,359.00**. All payments shall be governed by the Local Government Prompt Payment Act as Set forth in Sections 218.70 through 218.79, Florida Statutes, as amended.

5. *Truth-in-Negotiations*

(a) For any fixed fee, cost-plus-a-fixed-fee or guaranteed maximum-not-to-exceed compensation professional service contract or compensation in a Task Authorization over $150,000.00, Engineer shall execute a truth-in-negotiation certificate stating that wage rates and other factual unit costs supporting the compensation are accurate, complete, and current at the time of contracting. Any professional service contractor Task Authorization under which such certificate is required must contain a provision that the original contract price or compensation and any additions thereto will be adjusted to exclude any significant sums by which the City determines the contract price or compensation was increased due to inaccurate, incomplete, or noncurrent wage rates and other factual unit costs. All such contract or compensation adjustments must be made within one (1) year following the end of the Contract. Otherwise, such adjustments shall be deemed waived by the Engineer and null and void for the purposes of this Contract or Task Authorization. The signature on this Contract by the Engineer shall act as the execution of a truth- in-negotiation certificate stating that the wage rates and other factual unit costs supporting the compensation of this Contract are accurate, complete, and current at the time of contracting.

(b) Engineer's signature on this Contract or a Task Authorization shall act as execution of a truth-in-negotiation certificate stating that wage rates and other factual unit costs supporting the compensation set forth in this Contract or a Task Authorization are accurate, complete, and current at the time of contract. The certification shall also constitute an affirmation that Engineer has disclosed all debts or fees owed to or that are pending before the City prior to the execution of this Contract of Task Authorization.

6. This Task Authorization may be executed in one or more counterparts, each of which shall be deemed to be an original but all of which together shall constitute one and the same instrument. The delivery by facsimile or e-mail of an executed copy of this Task Authorization shall be deemed valid as if an original signature was delivered. No contract shall be formed between the Engineer and the City until the City signs this Task Authorization.

IN WITNESS WHEREOF, the Parties have made and executed this Task Authorization for the purposes herein expressed on the dates set forth below.

Witnesses:

KIMLEY-HORN AND ASSOCIATES, INC.

_____ By: _____

Printed Name: _____ Jonathan D. Thigpen, Senior Vice President

_____ Date: _____

Printed Name: _____

At this time the City <u>does not</u> accept electronic/digital signatures. A wet signature is required for this document.

City of Port Orange

By:

Scott Stiltner, Mayor

Date:

Attest:

By:

Robin L. Fenwick, MMC, City Clerk

Date:

EXHIBIT "1"

Engineer's Proposal

Consisting of 6 Pages

Kimley»Horn

PROPOSAL FOR LOWES LIFT STATION
CONSTRUCTION PHASE SERVICES

Describing a specific agreement between Kimley-Horn and Associates, Inc. (Kimley-Horn), and The City of Port Orange (the Client or the City) in accordance with the terms of the Master Agreement for Continuing Professional Services dated January 18, 2022, which is incorporated herein by reference.

Project Understanding

The scope of work presented below was prepared following discussions with the City of Port Orange staff regarding the City of Port Orange Lowes Lift Station. City staff requested that Kimley-Horn provide a proposal to provide construction phase services. The following is our understanding of the specific scope of work that has been requested by City staff.

Specific Scope of Basic Services:

Task 1: Construction Phase Services

A. Kimley-Horn will contract directly with the electrical engineering subconsultant, Electrical Design Associates (EDA) to provide electrical engineering construction phase services as defined in their proposal, enclosed herein.

B. Kimley-Horn will coordinate a Pre-Construction Conference prior to the commencement of work at the site.

C. Kimley-Horn will review shop drawings, samples, and other data that the Contractor is required to submit based on permit conditions, but only for conformance with the information given in the Contract Documents. Such review and approvals or other action will not extend to means, methods, techniques, equipment choice and usage, sequences, schedules, or procedures of construction or related safety precautions and programs.

D. Kimley-Horn will review requests for information (RFIs), monthly pay applications, change orders, and other appropriate correspondence from the Contractor and will coordinate with the City on approvals and responses.

E. Kimley-Horn will attend monthly construction progress meetings for the duration of the project (estimated at one per month for twelve months). Kimley-Horn will issue electronic meeting minutes and project updates following each progress meeting.

F. Kimley-Horn will provide on-site construction observation services during the construction phase of the project. Kimley-Horn will make up to twelve (12) visits during construction under this task to observe the progress of the Work. Such visits and observations by Kimley-Horn are not intended to be exhaustive or to extend to every aspect of the Contractor's work in progress. Observations are to be limited to spot-checking, selective measurement, and similar methods of general observation of the Work-based on Kimley-Horn’s exercise of professional judgment. Based on information obtained during such visits and such observations, Kimley-Horn will evaluate whether the Contractor's work is generally proceeding by the Contract Documents, and Kimley-Horn will keep the Client informed of the general progress of the Work.

G. Kimley-Horn will review and compile construction records including as-builts, shop drawings, O&M manuals, and engineer record drawings following completion of construction. Kimley-Horn will assist the City in the preparation of certification and close-out documents for applicable FDEP Permits. Kimley-Horn will submit record drawings and certification submittals to FDEP upon receipt of documentation from the Contractor.

Schedule:

These services will be completed as expeditiously as possible. Kimley-Horn assumes a total project schedule of 12 months.

Deliverables:

Deliverables for this project include the following:

- Certification and Close Out Documents
- Final Record Drawings

Method of Compensation:

Kimley-Horn will perform these services for the total lump sum fee of $77,359 inclusive of expenses. Invoices will be billed on a percent complete basis per task. A breakdown of the fee by task is as follows:

Task	*Description*	*Subconsultant*	*Kimley-Horn*	*Lump Sum*
1	Construction Phase Services	$19,395	$57,964	$77,359
Total				**$77,359**

Other Special Terms:

Services provided under this agreement will be invoiced on a monthly basis. All invoices will include a description of services provided.

ACCEPTED:

CITY OF PORT ORANGE, FLORIDA

BY: See page 4 of Task Authorization No. 21

TITLE: _____

DATE: _____

KIMLEY-HORN AND ASSOCIATES, INC.

BY: _____
Jon Martin, PE

TITLE: Sr. Vice President

DATE: _____

Electrical Design Associates

February 7, 2025

Nicole McConnell, P.E.
Kimley-Horn
1530 Cornerstone Blvd, Suite 200
Daytona Beach, FL 32117

RE: Lowe's Lift Station Rehabilitation
City of Port Orange, FL

Dear Ms. McConnell:

We are pleased to submit our proposal for electrical and I&C engineering construction services for the above project. The following serves to provide an overview of the engineering services Electrical Design Associates (EDA) intends to furnish on the above referenced project to Kimley-Horn and provides the agreed upon sum. Your signature on this agreement will serve as your letter of intent and official notice to proceed with the referenced work. Services not specifically identified are not included (HVAC, Mechanical, Fuel, etc.).

Task 1 Construction Administration Services

The duration of the construction is anticipated to be 24 months. It is anticipated the City will provide construction management and construction inspection services. EDA will not provide a resident for construction services.

Conformed Documents

EDA will prepare conformed documents incorporating into the construction documents revisions and clarifications that occurred during the bidding phase. A digital copy, in AutoCAD format, will be provided to Kimley Horn.

Pre-Construction Meeting

EDA will attend the Pre-Construction Meeting with the City and Contractor. One EDA team member will attend the Meeting.

Progress Meetings

Appropriate EDA personnel will attend monthly construction progress meetings. One EDA team member will attend up to 14 Monthly Progress Meetings.

Shop Drawings and O&M Submittals

EDA shall review and approve (or take other appropriate action in respect of) Shop Drawings and samples, the results of tests and inspections and other data which each Contractor is required to submit, but only for conformance with the design concept of the Project and compliance with the information given in the Contract Documents (but such review and approval or other action shall not exceed to means, methods, sequences, techniques or procedures of construction or to safety precautions and programs incident thereto); and receive and review (for general content as required by the Specifications) maintenance and operating schedules and instruction, guarantees, bonds and certificates of inspection which are to be assembled by Contractor(s) is in accordance with the Contract Documents. Up to nine (9) submittals at an average of 6 hours/submittal are budgeted for review by EDA.

Requests for Information (RFIs)/Change Orders

When requested by the City or the Contractor, EDA will issue technical interpretations or clarifications of the drawings or technical specifications. EDA may issue additional instructions, by means of drawings or technical specification updates, to clarify the intent of the design. Up to three (3) RFIs are included in the scope of this subtask at an average of 5 hours/submittal. If any change orders are required during construction, EDA will review up to three change orders to the contract documents.

Startup and Testing

Kimley Horn will provide field support services to assist during the Startup and Testing. The budget allocation includes provision for up to two EDA project team members for up to 4 hours each.

Substantial Completion Punch List

Upon substantial completion of the work, up to two EDA personnel will visit the site to develop a “punch list” of items to be completed before substantial completion can be awarded to the Contractor. The punch list will be provided to the City for inclusion into the plant-wide substantial completion punch list.

Final Completion and Clearance

Up to one EDA personnel will visit the site to perform a single final completion inspection. Kimley Horn will submit clearance documentation to the permitting authority (as required) to obtain clearance to operate the project.

Record Drawings

EDA will prepare record drawings based on the Contractor’s as-builts and red lines. EDA will submit a digital PDF of the record drawings.

Fee for Base Scope of Work

Our scope of services shall include the Electrical and Instrumentation engineering services associated with the proposed project design. All mechanical engineering, including but not limited to HVAC, Plumbing, Fuel, Process, etc., to be completed by others. Services not specifically identified are not included. The attached spreadsheet provides an estimate of our anticipated work effort. Our initial fee for this work will be lump sum, billed monthly and is based on the attached estimate hand will not be billed as a separate line item. Additional fee will be submitted for any of the task items identified herein not completed under the initial fee identified above. Work shall be based on the following:

Task 1 – Construction Administration Services	$ 19,394.79
Total:	**$ 19,394.79**

Very truly yours,

William C. Nelson, P.E.

ACCEPTED_____DATE_____

KH-25-002G

Electrical Design Associates

Kimley-Horn
Lowe's Lift Station Rehabilitation
Port Orange, FL
Estimate of Work Effort & Fee

Date: 2/7/2025

	Principal		Senior Engineer		Engineer		Field Supervisor		Cadd Technician		Clerical/Admin		Totals	
	Hourly Rate	$199.41	Hourly Rate	$179.18	Hourly Rate	$156.06	Hourly Rate	$92.48	Hourly Rate	$80.92	Hourly Rate	$63.58		
Task 1 - Consruction Services	man-hours	Total	man-hours	Total	man-hours	Total	man-hours	Total	man-hours	Total	man-hours	Total	man-hours	Total
Conformed Documents	1	$ 199.41	0	$ -	2	$ 312.12	0	$ -	4	$ 323.68	1	$ 63.58	8	$ 898.79
Pre-Construction Meeting	1	$ 199.41	1	$ 179.18	0	$ -	0	$ -	0	$ -	0	$ -	2	$ 378.59
Progress Meetings	7	$ 1,395.87	7	$ 1,254.26	0	$ -	0	$ -	0	$ -	0	$ -	14	$ 2,650.13
Shop Drawings & O&M Submittals	12	$ 2,392.92	28	$ 5,017.04	10	$ 1,560.60	0	$ -	0	$ -	4	$ 254.32	54	$ 9,224.88
Requests for Information	8	$ 1,595.28	4	$ 716.72	0	$ -	0	$ -	0	$ -	3	$ 190.74	15	$ 2,502.74
Startup and Testing	0	$ -	4	$ 716.72	4	$ 624.24	0	$ -	0	$ -	1	$ 63.58	9	$ 1,404.54
Substation Completion	0	$ -	2	$ 358.36	0	$ -	2	$ 184.96	0	$ -	1	$ 63.58	5	$ 606.90
Final Completion and Clearance	1	$ 199.41	2	$ 358.36	0	$ -	0	$ -	0	$ -	1	$ 63.58	4	$ 621.35
Record Drawings	1	$ 199.41	1	$ 179.18	1	$ 156.06	2	$ 184.96	4	$ 323.68	1	$ 63.58	10	$ 1,106.87
Subtotal:	**31**	**$ 6,181.71**	**49**	**$ 8,779.82**	**17**	**$ 2,653.02**	**4**	**$ 369.92**	**8**	**$ 647.36**	**12**	**$ 762.96**	**121**	**$ 19,394.79**
Design Total	**31**	**$ 6,181.71**	**49**	**$ 8,779.82**	**17**	**$ 2,653.02**	**4**	**$ 369.92**	**8**	**$ 647.36**	**12**	**$ 762.96**	**121**	**$ 19,394.79**

Kimley»Horn

PROPOSAL FOR LOWES LIFT STATION
CONSTRUCTION PHASE SERVICES

Describing a specific agreement between Kimley-Horn and Associates, Inc. (Kimley-Horn), and The City of Port Orange (the Client or the City) in accordance with the terms of the Master Agreement for Continuing Professional Services dated January 18, 2022, which is incorporated herein by reference.

Project Understanding

The scope of work presented below was prepared following discussions with the City of Port Orange staff regarding the City of Port Orange Lowes Lift Station. City staff requested that Kimley-Horn provide a proposal to provide construction phase services. The following is our understanding of the specific scope of work that has been requested by City staff.

Specific Scope of Basic Services:

Task 1: Construction Phase Services

A. Kimley-Horn will contract directly with the electrical engineering subconsultant, Electrical Design Associates (EDA) to provide electrical engineering construction phase services as defined in their proposal, enclosed herein.

B. Kimley-Horn will coordinate a Pre-Construction Conference prior to the commencement of work at the site.

C. Kimley-Horn will review shop drawings, samples, and other data that the Contractor is required to submit based on permit conditions, but only for conformance with the information given in the Contract Documents. Such review and approvals or other action will not extend to means, methods, techniques, equipment choice and usage, sequences, schedules, or procedures of construction or related safety precautions and programs.

D. Kimley-Horn will review requests for information (RFIs), monthly pay applications, change orders, and other appropriate correspondence from the Contractor and will coordinate with the City on approvals and responses.

E. Kimley-Horn will attend monthly construction progress meetings for the duration of the project (estimated at one per month for twelve months). Kimley-Horn will issue electronic meeting minutes and project updates following each progress meeting.

F. Kimley-Horn will provide on-site construction observation services during the construction phase of the project. Kimley-Horn will make up to twelve (12) visits during construction under this task to observe the progress of the Work. Such visits and observations by Kimley-Horn are not intended to be exhaustive or to extend to every aspect of the Contractor's work in progress. Observations are to be limited to spot-checking, selective measurement, and similar methods of general observation of the Work-based on Kimley-Horn’s exercise of professional judgment. Based on information obtained during such visits and such observations, Kimley-Horn will evaluate whether the Contractor's work is generally proceeding by the Contract Documents, and Kimley-Horn will keep the Client informed of the general progress of the Work.

G. Kimley-Horn will review and compile construction records including as-builts, shop drawings, O&M manuals, and engineer record drawings following completion of construction. Kimley-Horn will assist the City in the preparation of certification and close-out documents for applicable FDEP Permits. Kimley-Horn will submit record drawings and certification submittals to FDEP upon receipt of documentation from the Contractor.

Schedule:

These services will be completed as expeditiously as possible. Kimley-Horn assumes a total project schedule of 12 months.

Deliverables:

Deliverables for this project include the following:

- Certification and Close Out Documents
- Final Record Drawings

Method of Compensation:

Kimley-Horn will perform these services for the total lump sum fee of $77,359 inclusive of expenses. Invoices will be billed on a percent complete basis per task. A breakdown of the fee by task is as follows:

Task	*Description*	*Subconsultant*	*Kimley-Horn*	*Lump Sum*
1	Construction Phase Services	$19,395	$57,964	$77,359
Total				**$77,359**

Other Special Terms:

Services provided under this agreement will be invoiced on a monthly basis. All invoices will include a description of services provided.

ACCEPTED:

CITY OF PORT ORANGE, FLORIDA

BY:_____

TITLE:_____

DATE:_____

KIMLEY-HORN AND ASSOCIATES, INC.

BY: _____
Jon Martin, PE

TITLE: Sr. Vice President

DATE:_____

Electrical Design Associates

February 7, 2025

Nicole McConnell, P.E.
Kimley-Horn
1530 Cornerstone Blvd, Suite 200
Daytona Beach, FL 32117

RE: Lowe's Lift Station Rehabilitation
City of Port Orange, FL

Dear Ms. McConnell:

We are pleased to submit our proposal for electrical and I&C engineering construction services for the above project. The following serves to provide an overview of the engineering services Electrical Design Associates (EDA) intends to furnish on the above referenced project to Kimley-Horn and provides the agreed upon sum. Your signature on this agreement will serve as your letter of intent and official notice to proceed with the referenced work. Services not specifically identified are not included (HVAC, Mechanical, Fuel, etc.).

Task 1 Construction Administration Services

The duration of the construction is anticipated to be 24 months. It is anticipated the City will provide construction management and construction inspection services. EDA will not provide a resident for construction services.

Conformed Documents

EDA will prepare conformed documents incorporating into the construction documents revisions and clarifications that occurred during the bidding phase. A digital copy, in AutoCAD format, will be provided to Kimley Horn.

Pre-Construction Meeting

EDA will attend the Pre-Construction Meeting with the City and Contractor. One EDA team member will attend the Meeting.

Progress Meetings

Appropriate EDA personnel will attend monthly construction progress meetings. One EDA team member will attend up to 14 Monthly Progress Meetings.

Shop Drawings and O&M Submittals

EDA shall review and approve (or take other appropriate action in respect of) Shop Drawings and samples, the results of tests and inspections and other data which each Contractor is required to submit, but only for conformance with the design concept of the Project and compliance with the information given in the Contract Documents (but such review and approval or other action shall not exceed to means, methods, sequences, techniques or procedures of construction or to safety precautions and programs incident thereto); and receive and review (for general content as required by the Specifications) maintenance and operating schedules and instruction, guarantees, bonds and certificates of inspection which are to be assembled by Contractor(s) is in accordance with the Contract Documents. Up to nine (9) submittals at an average of 6 hours/submittal are budgeted for review by EDA.

Requests for Information (RFIs)/Change Orders

When requested by the City or the Contractor, EDA will issue technical interpretations or clarifications of the drawings or technical specifications. EDA may issue additional instructions, by means of drawings or technical specification updates, to clarify the intent of the design. Up to three (3) RFIs are included in the scope of this subtask at an average of 5 hours/submittal. If any change orders are required during construction, EDA will review up to three change orders to the contract documents.

Startup and Testing

Kimley Horn will provide field support services to assist during the Startup and Testing. The budget allocation includes provision for up to two EDA project team members for up to 4 hours each.

Substantial Completion Punch List

Upon substantial completion of the work, up to two EDA personnel will visit the site to develop a “punch list” of items to be completed before substantial completion can be awarded to the Contractor. The punch list will be provided to the City for inclusion into the plant-wide substantial completion punch list.

Final Completion and Clearance

Up to one EDA personnel will visit the site to perform a single final completion inspection. Kimley Horn will submit clearance documentation to the permitting authority (as required) to obtain clearance to operate the project.

Record Drawings

EDA will prepare record drawings based on the Contractor’s as-builts and red lines. EDA will submit a digital PDF of the record drawings.

Fee for Base Scope of Work

Our scope of services shall include the Electrical and Instrumentation engineering services associated with the proposed project design. All mechanical engineering, including but not limited to HVAC, Plumbing, Fuel, Process, etc., to be completed by others. Services not specifically identified are not included. The attached spreadsheet provides an estimate of our anticipated work effort. Our initial fee for this work will be lump sum, billed monthly and is based on the attached estimate hand will not be billed as a separate line item. Additional fee will be submitted for any of the task items identified herein not completed under the initial fee identified above. Work shall be based on the following:

Task 1 – Construction Administration Services	$ 19,394.79
Total:	**$ 19,394.79**

Very truly yours,

William C. Nelson, P.E.

ACCEPTED_____DATE_____

KH-25-002G

EDA
Electrical Design Associates

Kimley-Horn
Lowe's Lift Station Rehabilitation
Port Orange, FL
Estimate of Work Effort & Fee

Date: 2/7/2025

	Principal		Senior Engineer		Engineer		Field Supervisor		Cadd Technician		Clerical/Admin		Totals	
	Hourly Rate	$199.41	Hourly Rate	$179.18	Hourly Rate	$156.06	Hourly Rate	$92.48	Hourly Rate	$80.92	Hourly Rate	$63.58		
Task 1 - Consruction Services	man-hours	Total	man-hours	Total	man-hours	Total	man-hours	Total	man-hours	Total	man-hours	Total	man-hours	Total
Conformed Documents	1	$ 199.41	0	$ -	2	$ 312.12	0	$ -	4	$ 323.68	1	$ 63.58	8	$ 898.79
Pre-Construction Meeting	1	$ 199.41	1	$ 179.18	0	$ -	0	$ -	0	$ -	0	$ -	2	$ 378.59
Progress Meetings	7	$ 1,395.87	7	$ 1,254.26	0	$ -	0	$ -	0	$ -	0	$ -	14	$ 2,650.13
Shop Drawings & O&M Submittals	12	$ 2,392.92	28	$ 5,017.04	10	$ 1,560.60	0	$ -	0	$ -	4	$ 254.32	54	$ 9,224.88
Requests for Information	8	$ 1,595.28	4	$ 716.72	0	$ -	0	$ -	0	$ -	3	$ 190.74	15	$ 2,502.74
Startup and Testing	0	$ -	4	$ 716.72	4	$ 624.24	0	$ -	0	$ -	1	$ 63.58	9	$ 1,404.54
Substation Completion	0	$ -	2	$ 358.36	0	$ -	2	$ 184.96	0	$ -	1	$ 63.58	5	$ 606.90
Final Completion and Clearance	1	$ 199.41	2	$ 358.36	0	$ -	0	$ -	0	$ -	1	$ 63.58	4	$ 621.35
Record Drawings	1	$ 199.41	1	$ 179.18	1	$ 156.06	2	$ 184.96	4	$ 323.68	1	$ 63.58	10	$ 1,106.87
Subtotal:	**31**	**$ 6,181.71**	**49**	**$ 8,779.82**	**17**	**$ 2,653.02**	**4**	**$ 369.92**	**8**	**$ 647.36**	**12**	**$ 762.96**	**121**	**$ 19,394.79**
Design Total	**31**	**$ 6,181.71**	**49**	**$ 8,779.82**	**17**	**$ 2,653.02**	**4**	**$ 369.92**	**8**	**$ 647.36**	**12**	**$ 762.96**	**121**	**$ 19,394.79**

CITY OF PORT ORANGE

Agreement

RENEWAL FORM

*****THIS FORM IS VALID IF EXECUTED PRIOR TO THE ORIGINAL AGREEMENT/CONTRACT EXPIRATION DATE*****

Verify your records by providing the following information:

Name of Company/Organization: Kimley-Horn and Associates, Inc. ("Contractor")

Name of Contact Person: Jonathan Thigpen, Sr. Vice President

Mailing Address: 189 South Orange Avenue
Suite 100, Orlando, FL 32801

E-Mail Contact Address: Jonathan.thigpen@kimley-horn.com

Phone: (407) 898-1511 Fax: (561) 863-8175

☒ Standard Contract for Service CA No. 7763

☐ Piggyback Agreement CA No. _____

☐ Purchase Order No. _____

Renewal Term: From January 18, 2025 To: January 17, 2026

Contractor to Provide to City:

☐ ~~Updated Bond~~ N/A

☑ Insurance Certificate/City as additional insured and Waiver of Subrogation for WC

To be completed by the Contractor:

YES X **Contractor desires to renew this Agreement for another term at the same price, requirements, specifications, and conditions as provided for above.**

NO ____ **Contractor does not desire to renew this Agreement for another term.**

If this Contract is signed by an individual not identified as an Officer of the Entity in the records of the Florida Department of State, Division of Corporations, please provide written authorization for that individual to enter into contracts on behalf of the Entity.

Contractor's Authorized Representative: _____ **Date:** 1/13/25
Signature

Please return to the City of Port Orange as follows:

Department: Engineering Department Telephone: (386) 506-5751

Contract: Julia Wiggins, Business Manager Fax: (386) 756-5370

E-Mai: jwiggins@port-orange.org

For City Use Only:

Department Completes the Following:

☒ Renewal Accepted by the Department

☐ Bond received by the Department ***OR*** ☒ Bond not applicable

☒ Insurance Certificate received by the Department ***OR*** ☐ Insurance waived by City Manager

City Manager: _____ **Date:** 1/14/2025

Original Signed Form Must Be Returned to the City Clerk *Form 13024*

CITY OF PORT ORANGE MASTER CONTRACT PROFESSIONAL ENGINEERING SERVICES FOR PUBLIC WORKS, UTILITIES AND ENVIRONMENTAL SERVICES

This Standard Contract for Services ("Contract") is entered into this 18 day of Jan, **2022**, by and between the **CITY OF PORT ORANGE**, a Florida municipal corporation, whose principal address is 1000 City Center Circle, Port Orange, Florida 32129 (the "City"), and **KIMLEY-HORN AND ASSOCIATES, INC.**, a North Carolina corporation, registered to transact business in Florida, whose principal address is 421 Fayetteville Street, Suite 600, Raleigh, North Carolina 27601 ("Engineer"). The City and Engineer are collectively referred to herein as the "Parties."

The City and the Engineer for Ten Dollars ($10.00) and other good and valuable consideration hereby covenant and agree as set forth below.

1. *Provision of Services*

(a) The Engineer hereby agrees to provide the following services to the City of Port Orange:

(i) Professional continuous utility engineering consulting services to complete a wide range of projects led by the City of Port Orange Public Works and Utilities Department in accordance with Consultants Competitive Negotiation Act, and as more specifically described in Request for Statement of Qualifications 21-03 ("RFSQ 21-03"). This Contract together with RFSQ 21-03, Addendum No. 1, Addendum No. 2, and Engineer's Proposal, all of which may be referred to as the "Contract" and all of which are made a part hereof by reference shall constitute the formal written Contract between the City and Engineer. For convenience, Section 3, Scope of Services, of RFSQ 21-03, and the Schedule of Hourly Billing Rates as submitted by Engineer in Engineer's Proposal are attached hereto as Exhibit "1." A complete copy of RFSQ 21-03 is available in the Office of the City Clerk. Engineer represents that they are familiar with the documents that make up the Contract, as referenced hereinabove.

(b) The time, manner and place for performance of such services shall be:

Term: The term of this Contract shall commence on the date this Contract is signed by both of the Parties, and shall continue for a period of three (3) years, or until either party provides the other party written notice of its intent to terminate as provided in this Contract.

Renewals: Upon written agreement of the Parties and appropriation by City Council, this Contract may be renewed for up to two (2) additional one (1) year periods.

Manner and Place: The Engineer shall perform the services as outlined in each project assignment, in accordance with Standard Construction Details as required on all City owned facilities and properties (i.e. rights-of-way) and in a manner as required by all current federal, state, county, fire, building and land development codes, laws, ordinances and regulations, and with applicable permits and licenses per the City Code of Ordinances. Engineer shall not deliver goods or services without a fully executed task authorization and a written purchase order, signed by an authorized agent of the City of Port Orange.

Time and Essence: Engineer acknowledges that time is of the essence in the completion of the services contemplated by this contract, and shall complete all services within the timeline specified by this contract, and shall complete all services within the timeline specified in the project, and as reflected on the Notice to Proceed.

2. *Authorization for Services* This Contract standing alone does not authorize the performance of any work or services to be provided by the Engineer or require the City to place any orders for work or service. Authorization for performance of services by the Engineer under this Contract shall be in the form of written Task Authorization(s) ("Task Authorization") issued and executed by the City and signed by the Engineer. A sample Task Authorization is attached hereto as Exhibit "2."

a. All Task Authorizations issued under this Contract shall terminate at the expiration of the term of the Task Authorization, unless amended in writing by the parties. If a Task Authorization issued before the expiration of this Contract cannot be completed until after the expiration of this Contract, then this Contract shall expire on the Completion of Services under said Task Authorization, including any Amendments thereto, and after all work or services under the Task Authorization have been approved and accepted by the City's Contract Administrator. The obligations entered herein by both parties under this Contract and said Task Authorizations shall remain in full force and effect until completion of all work or services performed under this Contract and/or the Task Authorization.

b. No new or additional Task Authorization shall be issued after the original expiration date of this Contract. The extension of this Contract to coincide with the completion of an existing Task Authorization issued prior to the original expiration date of this Contract shall not be construed as or constitute authorization by the City or the Engineer to enter into a new or additional Task Authorization after the original expiration date of this Contract, unless this Contract is renewed prior to entering into a Contract for a new or additional Task Authorization.

3. *City Obligations* The City reserves the right to utilize lump sum or hourly rate compensation, at the hourly rate compensation as set forth in Exhibit "1." Rates may be adjusted on the anniversary of the effective date of this Contract, upon mutual written agreement of the Parties. The City's obligation to pay Engineer under this Contract is limited to an amount not to exceed the appropriated budget per fiscal year. All payments shall be governed by the Local Government Prompt Payment Act as set forth in Sections 218.70 through 218.79, Florida Statutes, as amended. The Engineer shall be paid compensation for all services, labor and material required thereby, and for all expenditures as specified in each Task Authorization. The fee shall be negotiated for each Project Task Authorization to this Contract. The Engineer shall submit a monthly statement for professional services rendered and expenses incurred to date of the statement. The statements for lump sum shall be based upon Engineer's estimate of the proportion of the total services actually completed at the time of billing to the total services to be performed. Such estimates are to be prepared by the Engineer and accompanied by such supporting data as may be required by the Contract Administrator. Compensation for any authorized cost which is not set forth in the Contract shall not exceed the actual, documented out-of-pocket cost to the Engineer, plus fifteen percent (15%). The Contract and Task Authorization(s) do not include retainer fees, nor is there a minimum fee guaranteed during the Contract period.

4. *Contract Administration* The Public Works and Utilities Director, Lynn Stevens, shall perform contract administration of this Contract. The City may change the contract administrator, from time to time and at any time, upon written notice to Engineer. For notice provisions, see the paragraph below entitled "Notice."

5. *Liens* Engineer acknowledges that Engineer shall not be entitled to lien the City or other public property.

6. *Statement of Engineering Services* The Engineer shall:

(a) Provide all certifications ("Engineer of Record" function) surveys, calculations, drawings, and any other documents required for special permits and authorizations from various government bodies or agencies having jurisdiction over the project;

(b) Prepare a time scaled diagram showing the dates of completion of various design phases and scheduled completion of working drawings and specifications and submit for Contract Administrator's review and approval;

(c) Verify and evaluate technical proposals furnished by the construction Engineer if requested by the City and provide such amplifications and explanations that may be necessary to clarify the intent of the drawings and specifications.

(d) Furnish consultation and advice as requested by the City during the construction of project, including Construction Administration Services (unless otherwise stipulated in a specific amendment attached hereto and made a part thereof);

(e) Furnish all other engineering services including without limitation those specified hereinafter and those required for the completion of specific projects as described in amendments to this contract:

(i) *Site Visits/Special Permits* The Engineer shall visit the site and shall initiate and hold such conferences with representatives of the City and other agencies, boards or government bodies having jurisdiction over the area the project covers and take such other action as may be necessary to obtain permits and authorizations (except the construction permits) and other data upon which to develop the design and preliminary sketches showing the contemplated project.

(ii) *Preliminary Sketches and Opinion of Probable Construction Costs* The preliminary sketches shall include plans, elevations and sections development in such detail and with such descriptive specifications as will clearly indicate the scope of work, and make possible a reasonable opinion of the construction cost and satisfy the requirements of permitting and regulatory agencies having jurisdiction. An opinion of probable construction costs shall be prepared.

(iii) *Working Drawings and Specifications* After the preliminary sketches and opinion of probable construction costs have been approved, the Engineer shall proceed with the preparation of working drawings and specifications as required by the Contract Administrator for the construction of said project. Working drawings, specifications and estimates shall be delivered to the Contract Administrator in such sequence and at such times as required by the City such that the construction work can be initiated promptly, procurement of materials made without delay and continuous prosecution of the work promoted, all in strict accordance with the approved design schedule as provided in Paragraph 5 (b) above. Working drawings and specifications shall be revised as necessary and as required by the Contract Administrator. After working drawings and specifications have been approved by the Contract Administrator, the Engineer shall furnish such number of sets of prints of the approved working drawings and such number of sets of the approved specifications, as may be required by the Contract Administrator.

(iv) *Original Drawings - Final Plans* Upon approval of final plans the Engineer shall deliver to the City one set of original drawings, in such medium and on such materials, as may be required by the Contract Administrator, suitable for blueprinting, showing approved constructed requirements (not of "as-built" construction unless otherwise stipulated), provided, however, that should this contract be terminated by the City the Engineer shall deliver to the City one set of originals as they exist at the time of termination. Such plans as are delivered shall become and remain the property of the City.

(v) *Revision of Final Drawings and Specifications* The engineer shall without additional fee correct and revise the drawings, specifications, or other materials furnished under this contract, if the Contract Administrator finds that such revision is necessary to correct errors or deficiencies for which the Engineer is responsible.

(vi) *Bidding* The Engineer shall perform all necessary engineering services required in connection with the competitive bidding for construction of the project and the preparation of all documents required thereof, including preparation of documents for separate bid packages for multiple contractors if so required by Contract Administrator.

7. *Responsibility of the Engineer* The Engineer shall be responsible for the professional and technical accuracy and the coordination of all designs, drawings, and specifications and other work or materials furnished by the Engineer under this contract. The Engineer shall without additional cost or fee to the City, correct or revise any errors or deficiencies in his performance.

8. *Reuse of Documents* The City shall have unlimited rights, for the benefit of the City in all drawings, designs, specifications, notes and other engineer's work produced in the performance of this contract, or in contemplation thereof, and all as-built drawings produced after completion of the work, including the right to use same on any other City work without additional cost to the City. All documents including Drawings and Specifications prepared by Engineer pursuant to this Contract are instruments of service in respect of the Project. They are not intended or represented to be suitable for reuse by City or others for any other project. Reuse for another project without written verification or adaption by Engineer for the specific purpose intended will be at City's risk. Any such verification or adaption will entitle Engineer to further compensation at rates to be agreed upon by City and Engineer. A reproducible set of plans and specifications shall be delivered to and become the property of the City upon completion of the Project by the Engineer.

9. *Expert Witness* The Engineer shall serve as an expert witness for the City in any legal proceedings regarding this project if the City so requests. The expert witness fee for Engineer shall be negotiated at the time the Engineer is called as an expert.

10. *Modifications to Scope of Work/Change Orders*

(a) Change Orders. The Contract Administrator, upon written approval as required by the City's Purchasing Policy, shall without notice to any sureties, have the authority to order changes in this Contract which affect the cost or time of performance. Such changes shall be ordered in writing specifically designated to be a change order. Such orders shall be limited to reasonable changes in one or more of the following: the services to be performed, the contract price or the time of the performance. The City will not be held liable for any changes which have not been properly authorized and approved in accordance with this Contract.

(b) If any change under this clause causes an increase or decrease in Engineer's cost of, or time required for the performance of the work hereunder, Engineer shall receive an equitable adjustment and the contract

shall be modified in writing accordingly. Any change shall include all costs and damages related to or incidental to such change.

(c) Any claim by the Engineer for adjustment under this clause shall be asserted in writing within thirty (30) days from the date of receipt by the Engineer of the notification of change unless the Contract Administrator grants a further period of time before the date of final payment under the contract. The Engineer shall proceed with the prosecution of the work as changed. Except as provided in this Contract, the Engineer shall not be entitled to payment for a charge for any extra work or material.

11. *Subcontractors or Sub-Subcontractors*

(a) Any subcontractors and outside associates or consultants required by the Engineer in connection with the services covered by the Contract will be limited to such individuals or firms as are specifically identified in an amendment to this Contract. Any substitution in such subcontractors, associates, or consultants shall be subject to the prior approval of the Contract Administrator.

(b) Engineer shall save and hold the City harmless from any and all claims or actions by Engineer's Subcontractors or Sub-subcontractors for payment of monies such Subcontractor of Sub-subcontractor claims to be owed by Engineer for work performed under this Contract.

(c) Nothing in this Contract shall create any obligation on the part of the City to pay directly to any Subcontractors of Sub-subcontractors or claims of a Subcontractor or Sub-subcontractors for amounts owed by Engineer to Subcontractor or Sub-subcontractor for work performed under this Contract.

(d) Engineer shall be fully responsible for all negligent acts and omissions of it Subcontractors and Sub-subcontractors and of persons directly or indirectly employed by them and of persons of whose negligent acts any of them may be liable to the same extent that it is responsible for the negligent acts and omissions of persons directly employed by it. Nothing in the Contract documents shall create any contractual relationship between any subcontractor and the City or any obligation on the part of the City to pay or to see to the payment of any moneys due any subcontractor to the extent practicable, evidence of amounts paid to the Engineer on account of specific work done in accordance with the schedule of values.

(e) The Engineer shall require all subcontractors or sub-subcontractors or outside associates employed in connection with the performance of this Contract to comply fully with the terms and conditions of this Contract between the City and the Engineer.

12. Termination

(a) The performance of work under this Contract may be terminated by the City in accordance with this clause in whole, or from time to time in part, whenever the Contract Administrator shall determine that such termination is in the best interest of the City. Any such termination shall be effected by delivery to the Engineer of a Notice of Termination specifying the extent to which performance of work under the Contract is terminated, and the date upon which such termination becomes effective.

(b) After receipt of a Notice of Termination, and except as otherwise directed by the Contract Administrator, the Engineer shall:

(i) Stop work under the Contract on the date and to the extent specified in the Notice of Termination.

(ii) Place no further orders or subcontracts for materials, services or facilities, except as may be necessary for completion of such portion of the work under the Contract as it is not terminated.

(iii) Terminate all orders and subcontracts to the extent that they relate to the performance of work terminated by the Notice of Termination.

(iv) Assign to the City in the manner, at the times and to the extent directed by the Contract Administrator, all of the right, title, and interest of the Engineer under the orders and subcontracts so terminated, in which case the City shall have the right, in its discretion, to settle or pay any or all claims arising out of the termination of such orders and subcontracts.

(v) Settle all outstanding liabilities and all claims arising out of such termination of orders and subcontracts, with the approval or ratification of the Contract Administrator, to the extent the City may require which approval or ratification shall be final for all the purposes of this clause.

(vi) Transfer title and deliver to the City in the manner, at the times, and to the extent, if any, directed by the Contract Administrator.

a. The fabricated or unfabricated parts, work in process, completed work, supplies, and other material produced as a part of, or acquired in connection with the performance of, the work terminated by the Notice of Termination; and

b. The completed or partially completed plans, drawings, information, and other property which, if the contract has been completed, would have been required to be furnished to the City.

(vii) Complete performance of such part of the work as shall not have been terminated by the Notice of Termination.

(c) After receipt of a Notice of Termination, the Engineer shall submit to the City's Contract Administrator his termination claim, in the form and with certification prescribed by the Contract Administrator. Such claim shall be submitted promptly but in no event later than thirty (30) days from the effective date of termination, unless one or more extensions in writing are granted by the Contract Administrator, upon request of the Engineer made in writing within such thirty (30) days period or authorized extension thereof. Upon failure of the Engineer to submit his termination claim within the time allowed, the Contract Administrator may determine on the basis of information available to him, the amount, if any, due to the Engineer by reason of the termination and shall thereupon pay to the Engineer the amount so determined.

(d) Subject to the provisions of Paragraph 11 (c), the Engineer and the Contract Administrator may agree upon the whole or any part of the amount or amounts to be paid the Engineer by reason of the total or partial termination of work pursuant to this clause, the total or partial termination of work pursuant to this clause, which amount or amounts may include a reasonable allowance for profit on work done; provided, that such agreed amount or amounts exclusive of settlement costs, shall not exceed the total contract price as reduced by the amount of payments otherwise made and as further reduced by the contract price of work not terminated. The Contract shall be amended accordingly and the Engineer shall be paid the agreed amount. Nothing in Paragraph 11 prescribing the amount to be paid to the Engineer, shall be deemed to limit, restrict, or otherwise determine or affect the amount or amounts which may be agreed upon to be paid.

(e) In the event of the failure of the Engineer and the Contract Administrator to agree as provided in Paragraph 11 (d), upon the whole amount to be paid to the Engineer by reason of the termination of work pursuant to this subparagraph, the Contract Administrator shall pay to the Engineer the amounts determined by the Contract Administrator, but without duplication of any amounts agreed upon, as follows:

(i) For completed work and services accepted by the City, the price or prices specified in the contract for such work, less any payments previously made.

(ii) The total of:

a. The costs incurred in the performance of the work and service terminated, including initial costs and preparatory expenses allocable thereto, but exclusive of any costs attributable to the work and services paid or to be paid for under Paragraph 11 (e)(i) hereof;

b. The cost of settling and paying claims arising out of the termination of work or services under subcontracts or orders as provided in Paragraph 11 (b)(v) above, which are properly chargeable to the terminated portion of the contract exclusive of amounts paid or payable on account of work or services delivered or furnished by subcontractors prior to the effective date of termination, which amounts shall be included in the costs payable under Paragraph 11 (a) above; and

c. A sum, as profit on Paragraph 11 (a) above, determined by the Contract Administrator to be fair and reasonable, not to exceed 5% of the Task Authorization.

(iii) In the event the contract is terminated because of Engineer's default, the City may take over the work and services and complete the same by contract or otherwise, and the Engineer shall be liable to the City for any increased cost of the project.

13. *Termination for Non-Appropriation of Funds*

(a) If funds are not appropriated for any succeeding fiscal years subsequent to the one in which this contract is entered into, for the purpose of this Contract, then the City may terminate this Contract upon thirty (30) days prior written notice to the Engineer. Should termination be accomplished in accordance with this Section, the City shall be liable only for payments due through the date of termination. The City agrees that should it terminate in accordance with this Section, it shall not obtain services which are substantially equal to or similar to those for which this contract was entered into. This provision shall survive any termination of the Contract.

14. *Engineer's Records*. The design, permits and all other records prepared by the Engineer, assembled for the City, subcontracted for the City, and any other records related to the scope of work in the possession of the Engineer shall be retained by the Engineer for the requisite time set forth in Florida Administrative Code Rule 1 B-24 http://dos.myflorida.com/library-archives/records-management/. Engineer may dispose of the records in accordance with Florida law, upon receipt of a signed written release signed by the City Attorney. During the term of this Contract, as amended from time to time, Engineer agrees to indemnify the City for failure to comply with the requirements of this paragraph including costs of litigation and legal fees incurred through all appeals. City reserves the right to select and approve the defense attorney. The Engineer's obligations pursuant to this paragraph shall survive the termination of this Contract, and as amended from time to time.

15. *Examination of Records*

(a) The Engineer agrees that the City, or any duly authorized representative, shall, until the expiration of five (5) years after final payment hereunder, have access to and the right to examine and copy any pertinent books, documents, papers and records of the Engineer involving transactions related to this Contract.

(b) The Engineer further agrees to include in any subcontract for more than $10,000 entered into as a result of this Contract, a provision to the effect that the subcontractor agrees that the City or any duly authorized representative shall, until the expiration of five (5) years after final payment under the subcontract, have access to

and the right to examine and copy any pertinent books, documents, papers and records of such Engineer involved in transactions related to such subcontract, or this Contract. The term subcontract as used herein shall exclude purchase orders for public utility services at rates established for uniform applicability to the general public.

(c) The period of access provided in subparagraphs (a) and (b) above for records, books, documents and papers which may relate to any arbitration, litigation, or the settlement of claims arising out of the performance of this contract or any subcontract shall continue until any appeals, arbitration, litigation or claims shall have been finally disposed of.

16. *Public Records Compliance* Engineer shall comply with public records laws as set forth in Chapter 119, Florida Statutes, and shall specifically:

(a) Keep and maintain public records required by the City to perform the service.

(b) Upon request from the City's custodian of public records, provide the City with a copy of the requested record or allow the records to be inspected or copied within a reasonable time at a cost that does not exceed the cost provided in Section 119, Florida Statutes, or as otherwise provided by law.

(c) Ensure that public records that are exempt from public records disclosure requirements are not disclosed except as authorized by law for the duration of the Contract term and following completion of the Contract if the Engineer does not transfer the records to the City.

(d) Upon completion of the Contract, Engineer shall transfer to the City, at no cost, all public records in possession of the Engineer and destroy any duplicate public records that are exempt from public records disclosure requirements. All records stored electronically must be provided to the City, upon request from the City's custodian of public records, in a format that is compatible with the information technology systems of the City.

If Engineer does not comply with a public records request, the City shall deem the non-compliance a breach of this Contract, and the Engineer may be subject to penalties under Section 119.0701, Florida Statutes.

ENGINEER QUESTIONS RELATING TO ENGINEER'S DUTIES TO PROVIDE PUBLIC RECORDS RELATING TO THIS CONTRACT MUST BE FORWARDED TO THE OFFICE OF THE CITY CLERK, CITY HALL, 1000 CITY CENTER CIRCLE, PORT ORANGE, FLORIDA 32129; TELEPHONE: (386) 506-5563; E-MAIL: CITYCLERK@PORT-ORANGE.ORG.

17. *Insurance* Engineer shall maintain insurance, as required herein, during the life of this Contract. Engineer shall provide to the City, a certificate of insurance endorsing the City of Port Orange as an additional named insured. All insurance coverages of the Engineer shall be primary and non-contributory. All insurance coverages of the Engineer shall not seek contribution from any other insurance or self-insurance available to the City. For workers' compensation coverage, the Engineer's insurance certificate shall include the insurer's waiver of subrogation in lieu of endorsing the City as an additional insured for workers' compensation. The City shall not accept Workers' Compensation Exemptions Engineer may use leased employees if the Engineer ensures that all workers who access the jobsite are employees covered by the employee leasing company, and no non-employees are permitted to access the jobsite. Any Engineer using a leased employee shall complete the City's Leased Employee Affidavit Form Exhibit. Policies for Workers' Compensation may be issued by companies authorized as a group self-insurer by F.S. 440.572.

Policies other than Workers' Compensation shall be issued by insurers licensed and/or duly authorized under Florida Law to do business in the State of Florida and all insuring companies are required to have a minimum rating of "A-" in the "Best Key Rating Guide" published by A.M. Best & Company, Inc. Engineer shall not commence work under this Contract until the City has received a certificate or certificates of insurance with endorsement evidencing

the required insurance. Insurer shall provide the City written notice of cancellation, nonrenewal or any other changes in coverage no later than thirty (30) days prior to the effective date of the change and shall provide notice to the City no later than 10 days after non-payment. The Certificates of Insurance and required insurance policies shall contain provisions that thirty (30) days prior written notice shall be given to the City of any cancellation, intent not to renew, or reduction in the policies or coverages.

Engineer shall require and ensure each of its subcontractors to maintain, until the completion of the subcontractor's work, insurance of the types and to the limits set forth herein. All insurance coverages shall be primary and non-contributory. All insurance coverages of the subcontractors shall not seek contribution from any other insurance or self-insurance available to the City. The Engineer is responsible for ensuring that its subcontractors maintain the required coverage. Failure of the Engineer to ensure the subcontractors maintain the required coverage, shall not relieve the Engineer of any contractual responsibility, obligation or liability.

The City reserves the right to increase insurance coverage as determined for higher risk contracts.

The acceptance by the City of any Certificate of Insurance does not constitute approval or agreement by the City that the insurance requirements have been satisfied or that the insurance policy shown on the Certificate of Insurance is in compliance with this Contract and does not waive the insurance required by this Contract.

Should at any time the Engineer or subcontractors not maintain the insurance coverages required herein, the City may terminate the Contract or at its sole discretion shall be authorized to purchase such coverages and charge the Engineer for such coverages purchased. The City shall be under no obligation to purchase such insurance, nor shall it be responsible for the coverages purchased or the insurance company or companies used. The decision of the City to purchase such insurance coverages shall in no way be construed to be a waiver of any of its rights under the Contract.

Standard Insurance Requirements			
	Insurance	**Standards**	**Additional Requirements**
☒	Workers' Compensation The Engineer shall maintain coverage for its employees with statutory workers' compensation limits, and no less than the limits indicated in the Schedule of Limits for Employers' Liability. Said coverage shall include a waiver of subrogation in favor of the City. **The City will not accept elective exemptions**. Any Engineer using an employee leasing company shall complete the Leased Employee Affidavit (Exhibit A).	Contract Amount — Limits Up to $10 million — Statutory/$500,000 $10 - $20 million — Statutory/$1,000,000 Contracts over $20 million To Be Determined by the City.	☐If Contract requires work on or about navigable waters, Longshoreman's and Harbor Workers' Coverage required. ☐If vessels involved, Jones Act coverage with limits of $500,000 required.

☒	Comprehensive General Liability (including Completed Operations and Contractual Liability	Limits:	Combined Single Limit Bodily Injury and Property damage $1,000,000 occurrence $1,000,000 aggregate	☐When work is on or under Railroad rights of way or properties, the Engineer shall take out and maintain during the life of the Contract, Railroad protective liability and property damage insurance in amounts as requested by the Railroad.
☒	Comprehensive Business, Automobile Liability to include all owned, hired and non-owned automobiles.	Limits:	Auto Liability Body Injury and Property Damage: $1,000,000 each occurrence $1,000,000 aggregate	
	Additional Insurance Requirements			
☐	Property Insurance Builders Risk. Additional Coverage:	Limits:	Buildings - Completed value of Contract. "All Risk" coverage on latest ISO for or its equivalent. Permission granted to occupy. Owner named as insured AIMA	If Agreement requires handling or installation of Owner's equipment, coverage should be furnished on "All Risk" form, including transit and Owner shall be named.
☒	Professional Liability	Limits:	Coverage - $1,000,000	
☐	Installation Floater (IT)	Limits:	Coverage - $ To be determined.	
☐	Engineer Pollution Liability	Limits:	Coverage - $1,000,000	
☒	Errors and Omissions	Limits:	Coverage - $1,000,000	
☐	Umbrella Policy	Limits:	Coverage – $ To be determined.	
☐	Payment and Performance Bond Required	Limits:	Coverage - Equal to amount of Contract.	
☐	**City Manager waives Payment and Performance Bond for work under $25,000.00.**			
☐	**Unless otherwise required by law, City Manager waives Insurance for FOB goods under $25,000.00.**			

18. *Assignability of Contract* Neither this contract, nor any part hereof, may be assigned by the Engineer to any other party without the express written approval of the City Council.

19. *Sovereign Immunity*. The City expressly retains all rights, benefits and immunities of sovereign immunity in accordance with Section 768.28, Florida Statutes. Notwithstanding anything set forth in any section of this Contract to the contrary, nothing in this Contract shall be deemed as a waiver of immunity or limits of liability of the City beyond any statutory limited waiver of immunity or limits of liability which may have been adopted by the Florida Legislature or may be adopted by the Florida Legislature and the cap on the amount and liability of the City for damages regardless of the number or nature of claims in tort or equity shall not exceed the dollar amount set by the legislature for tort. Nothing in this Contract shall inure to the benefit of any third party for the purpose of allowing any claim against the City which would otherwise be barred under the Doctrine of Sovereign Immunity or operation of law.

20. *Liability for Loss or Damage*

(a) Engineer shall be liable for any loss of, or damage to, City property caused by the negligence, recklessness, or intended wrongful misconduct of Engineer, his/its agents, servants and employees and shall indemnify and save the City harmless against all actions, proceedings, claims, demands, costs, damages and expenses, including attorney's fees, by reason of any suit or action brought for any actual or alleged injury to or death

of any person or damage to property other than City property, to the extent caused by negligent performance of the Contract by Engineer, his/its agents, servants and employees. Engineer shall submit a full written report to the Finance Director within twenty-four (24) hours following the occurrence of such damage, loss or injury.

21. *Non-discrimination*. During the performance of this Contract, Engineer agrees as follows:

(a) Engineer will not discriminate against any employee or applicant for employment because of race, religion, color, sex, disability, marital status, age or national origin, except where such is a bona-fide occupational qualification reasonably necessary to the normal operation of Engineer. Engineer agrees to post in conspicuous places, available to employees and applicants for employment, notices setting forth the provisions of this non-discrimination clause. Engineer agrees and fully supports and complies with the Americans with Disabilities Act of 1990.

(b) Engineer shall state in all solicitations or advertisements for employees placed by or on behalf of Engineer that Engineer is an equal opportunity employer.

(c) Notices, advertisements and solicitations placed in accordance with federal law, rule or regulation shall be deemed sufficient compliance with this provision. Engineer shall include the provisions of the foregoing subparagraphs (a), (b), and (c) in every subcontract or purchase order of over $10,000 so that the provisions will be binding upon each subcontractor or vendor.

22. *E-Verify*. Engineer shall utilize the U.S. Department of Homeland Security's E-Verify system to verify the employment eligibility of all new employees hired by the Engineer on or after the effective date of this Contract and thereafter during the remaining term of this Contract, including all subcontractors. Any subcontract entered into by Engineer with any subcontractor performing work under this Contract shall include the following language: "The Sub-Engineer shall utilize the U.S. Department of Homeland Security's E-Verify system to verify the employment eligibility of all new employees hired by the Engineer on or after the effective date of this Contract and thereafter during the remaining term of the Contract." The Engineer covenants and agrees that if it is found in violation of this section of the Executive Order, such violation shall be a material breach of this Contract and Engineer shall indemnify, defend and hold harmless the City from any fines or penalties levied by a government agency, including the loss or repayment of grant funds by the City.

23. *Disputes* The City Manager, who shall reduce his decision to writing and mail or otherwise furnish a copy thereof to Engineer, shall decide disputes with respect to this Contract in the first instance. The decision shall be final and binding unless, within ten (10) days from the date of receipt of the decision of the City Manager, appeal is made to the City Council. The decision of the City Council shall be final and binding unless set aside by a court of competent jurisdiction as fraudulent, capricious, arbitrary, or so grossly erroneous as necessary to imply bad faith, or not to be supported by any evidence. Pending a final determination of a properly appealed decision of the City Council, Engineer shall proceed diligently with the performance of this Contract in accordance with that decision.

24. *Force Majeure* Neither party shall be liable for any delay in performance or failure to perform any obligation hereunder if, and to the extent that, such failure or delay is caused by an event of Force Majeure. Force Majeure shall mean any act, event or condition that is beyond the party's reasonable control, that materially and adversely affects the party's ability to perform its obligations hereunder, and that is not the result of the party's willful neglect, error, omission or failure to exercise reasonable due diligence.

25. *Controlling Law* **THIS AGREEMENT CONTAINS IMPORTANT MATTERS AFFECTING LEGAL RIGHTS AND IS ACCEPTED AND ENTERED INTO IN FLORIDA AND ANY QUESTION REGARDING ITS VALIDITY, CONSTRUCTION, ENFORCEMENT, OR PERFORMANCE SHALL BE GOVERNED BY FLORIDA LAW. ANY**

LEGAL PROCEEDING ARISING FROM OR IN ANY WAY REGARDING THE AGREEMENT SHALL HAVE ITS VENUE LOCATED EXCLUSIVELY IN THE CIRCUIT COURT OF VOLUSIA COUNTY, FLORIDA, AND THE PARTIES HEREBY EXPRESSLY CONSENT AND SUBMIT THEMSELVES TO THE PERSONAL JURISDICTION AND VENUE OF THE COURT.

26. *Additional Provisions*. This Contract includes all additional provisions as may have been outlined in written quotes and purchase orders and any attachments or exhibits to this Contract whether delivered herewith or subsequently approved as a part hereof, such as drawings or technical specifications prepared in the performance of this work. In the event of a conflict between any attachments or exhibits to this Contract, and this Contract, the language of this Contract shall control.

28. *Integration* This Contract and the documents incorporated herein by reference shall constitute the whole agreement between the parties. There are no promises, terms, conditions, or obligations other than those contained herein, and this Contract shall supersede all previous communications, representations, or agreements, written or verbal, between the parties hereto.

29. *Notice* For purposes of this agreement, notices shall be sent as follows:

City:
City of Port Orange
Attention: City Manager
1000 City Center Circle
Port Orange, Florida 32129
(386) 506-5501

Copy to:
City of Port Orange
Attention: Lynn Stevens, Public Works & Utilities Director
1000 City Center Circle
Port Orange, Florida 32129
(386) 506-5575

Engineer:
~~Kimley-Horn and Associates, Inc.~~
Attention: Brian A. Good, ~~Director~~
421 Fayetteville ~~Street~~
Suite ~~600~~
~~Raleigh, North Carolina 27601~~

Attention: Jonathan D. Thigpen, Senior Vice President
189 South Orange Avenue
Suite 1000
Orlando, Florida 32801
(407) 898-1511 – Telephone
(561) 863-8175 – Facsimile
~~Maybe.White@kimley-horn.com~~ jonathan.thigpen@kimley-horn.com

Any notice or other communication given under the Contract will be in writing and delivered by hand, sent by facsimile (provided acknowledgement of receipt thereof is delivered to the sender), sent by certified, registered mail, or sent by any nationally recognized overnight courier service to the addresses provided herein. The parties may,

from time to time and at any time, change their respective addresses and each will have the right to specify as its address any other address by at least 10 days written notice to the other party.

30. *Truth-in-Negotiations*

(a) For any fixed fee, cost-plus-a-fixed-fee or guaranteed maximum-not-to-exceed compensation professional service contract or compensation in a Task Authorization over $150,000.00, Engineer shall execute a truth-in-negotiation certificate stating that wage rates and other factual unit costs supporting the compensation are accurate, complete, and current at the time of contracting. Any professional service contract or Task Authorization under which such certificate is required must contain a provision that the original contract price or compensation and any additions thereto will be adjusted to exclude any significant sums by which the City determines the contract price or compensation was increased due to inaccurate, incomplete, or noncurrent wage rates and other factual unit costs. All such contract or compensation adjustments must be made within one (1) year following the end of the Contract. Otherwise, such adjustments shall be deemed waived by the Engineer and null and void for the purposes of this Contract or Task Authorization. The signature on this Contract by the Engineer shall act as the execution of a truth-in-negotiation certificate stating that the wage rates and other factual unit costs supporting the compensation of this Contract are accurate, complete, and current at the time of contracting.

(b) Engineer's signature on this Contract or a Task Authorization shall act as execution of a truth-in-negotiation certificate stating that wage rates and other factual unit costs supporting the compensation set forth in this Contract or a Task Authorization are accurate, complete, and current at the time of contract. The certification shall also constitute an affirmation that Engineer has disclosed all debts or fees owed to or that are pending before the City prior to the execution of this Contract of Task Authorization.

31. *Waiver of Breach and Materiality* Failure to enforce any provision of this Contract shall not be deemed a waiver of such provision or modification of this Contract. A waiver of any breach of a provision of this Contract shall not be deemed a waiver of any subsequent breach and shall not be construed as a modification of the terms of this Contract.

32. *Contract Construction*

This Agreement may be executed in one or more counterparts, each of which shall be deemed to be an original but all of which together shall constitute one and the same instrument. The delivery by facsimile or e-mail of an executed copy of this Agreement shall be deemed valid as if an original signature was delivered. No contract shall be formed between Engineer and the City until the City signs this Agreement.

33. *Authority to Sign* Each person signing this Agreement warrants that he or she is duly authorized to do so and to bind the respective party to the Agreement.

[Remainder of this page intentionally left blank]

Witnesses:

Printed Name: Nicole McConnell

Printed Name: Tucker Hunter

KIMLEY-HORN AND ASSOCIATES, INC.

By: _____
Jonathan D. Thigpen, Senior Vice President

If this Contract is signed by an individual not identified as the President of the corporation in the records of the Florida Department of State, Division of Corporations, please provide written authorization for that individual to enter into contracts on behalf of the corporation.

Date: January 7, 2022

STATE OF FLORIDA
COUNTY OF ORANGE

The foregoing instrument was acknowledged before me by means of ✓ physical presence or ___ online notarization, this 7th day of January, 2022, by Jonathan D. Thigpen, as Senior Vice President of Kimley-Horn and Associates, Inc., a North Carolina corporation, registered to transact business in Florida. He is ✓ personally known or ___ produced _____ as identification.

Notary Public, State of Florida
Printed, typed or stamped name, commission and expiration:

SUSAN M. GREMONPREZ
Commission # GG 298833
Expires February 9, 2023
Bonded Thru Troy Fain Insurance 800-385-7019

Witnesses:

Printed Name: Jamie Miller

Printed Name: Matt Jones

CITY OF PORT ORANGE

By: _____
Donald O. Burnette, Mayor

Date: 1/18/2022

STATE OF FLORIDA
COUNTY OF VOLUSIA

The foregoing instrument was acknowledged before me by means of ✓ physical presence or ___ online notarization, this 18 day of Jan., 2022, by Donald O. Burnette, as Mayor of the City of Port Orange, a Florida municipal corporation, on behalf of the city. He is ✓ personally known or ____ produced _____ as identification.

MATTHEW J. JONES
Commission # GG 931831
Expires January 23, 2024
Bonded Thru Troy Fain Insurance 800-385-7019

_____
Notary Public, State of Florida
Printed, typed or stamped name, commission and expiration:

Witnesses:

Printed Name: Jamie Miller

Printed Name: Matt Jones

ATTEST:

By: _____
Robin L. Fenwick, MMC, City Clerk

Date: 1/18/2022

STATE OF FLORIDA
COUNTY OF VOLUSIA

The foregoing instrument was acknowledged before me, by means of ✓ physical presence or ___ online notarization, this 18 day of Jan., 2022, by Robin L. Fenwick, as City Clerk of the City of Port Orange, a Florida municipal corporation, on behalf of the city. She is ✓ personally known or ___ produced _____ as identification.

MATTHEW J. JONES
Commission # GG 931831
Expires January 23, 2024
Bonded Thru Troy Fain Insurance 800-385-7019

_____
Notary Public, State of Florida
Printed, typed or stamped name, commission and expiration:

EXHIBIT "1"

Engineer's Schedule of Hourly Billing Rates and RFSQ 21-03 Section 3

Consisting of 2 Pages

KIMLEY HORN AND ASSOCIATES
SCHEDULE OF HOURLY BILLING RATES

Labor Position/Classification Level	Hourly Rate
Principal	$300.00
Senior Project Manager	$230.00
Project Manager	$190.00
Senior Project Engineer	$210.00
Project Engineer	$170.00
Analyst 3	$145.00
Analyst 2	$125.00
Analyst 1	$115.00
Senior Environmental Scientist	$185.00
Environmental Scientist	$130.00
GIS Analyst	$130.00
Grants Coordinator	$175.00
Sr CAD Designer	$185.00
CAD Designer	$150.00
CAD Technician	$110.00
Administrative	$95.00
Clerical	$75.00

Notes:
1. Billing rates listed in the table above are for the period from FY2022 through FY2024.
2. The salary multiplier billing rates include all payroll burden, overheads, and profit.
3. Subconsultants will be billed at 115% of actual cost
~~4. Standard project expenses will be billed as an allocation equivalent to 5.0% of the labor fee.~~

SECTION 3 – SCOPE OF SERVICES AND REQUIREMENTS

SCOPE OF SERVICES

The City of Port Orange is soliciting proposals from qualified firms for professional continuous engineering consulting services to complete a wide range of needs lead by the City of Port Orange Public Works & Utilities Department. The City will select a minimum of three, and up to five firms who can provide all, some, or one of the category service disciplines outlined in the scope of services. Firms do not have to be able to provide all of the services listed in the scope of services. For instance, if a firm only provides Environmental Services then they should state that in their initial Statement and provide all of the supporting data within the submittal to support the type of services provided. Individual firms are the focus of this RFSQ process, therefore the City will not accept Statements of Qualifications submitted with multiple firms (i.e., teams). The City is seeking the most highly qualified firms in the following category service disciplines;

- **Public Utilities (Water, Wastewater, & Reclaimed Water):**
  - Analysis, survey, design, permitting, bidding assistance, engineering services during construction, and State Revolving Funds (SRF) loan assistance for the Cities water, wastewater, and reuse systems. Including but not limited to the Cities wastewater collection and treatment systems, raw water wells, raw water transmission, water treatment, and reclaimed water storage and distribution systems
- **Public Works (Stormwater, Roadways, and Sidewalls/Trails):**
  - Analysis, survey, design, permitting, bidding assistance and engineering during construction for the Cities roadways and sidewalks
  - General stormwater needs as required by the Stormwater Utility Program. The list of services shall consist of, but not be limited to, the following:
  - National Pollutant Discharge Elimination System (NPDES) program assistance and implementation,
  - Total Maximum Daily Load (TMDL) program assistance and implementation including, but not limited to, the evaluation and establishment of estuarine TMDLS and NNC, developing ecosystem goals and targets based on the requirements of the environmental and biological indicators, hydrodynamic modeling, water quality statistical analysis, natural systems analysis and habitat analysis,
  - Watershed management planning including, but not limited to, initial hydrologic and hydraulic modeling of the watersheds in Port Orange, as well as pollutant loading modeling and updates to existing Stormwater Management Master Plans of the watersheds,
  - Engineering analysis/design and permitting of capital improvement projects, and
  - Other stormwater/environmental needs that may arise.
- **Environmental Services:**
  - Provide services related to wetlands mitigation bank management, gopher tortoise mitigation bank management, potable drinking water Consumptive Use Permit (CUP) permit monitoring, reporting, and compliance assistance, hydrologic services related to potable water wellfield management and development
  - Monitoring, sampling, and reporting services as required for permits issued and regulated by various local and State agencies such as Consumptive Use Permitting and other operational permits issued to the City by St. Johns River Water Management, U.S. Army Corps of Engineers, and the Florida Department of Environmental Protection for the operation of the Cities Wetlands Mitigation Bank, Gopher Tortoise Mitigation Bank each have very specific and differing water sampling, monitoring, and reporting procedures and requirements.
- **Grant Compliance Assistance:**
  - Provide Grant Compliance assistance for local, state, and federally administered grants, including but not limited to, HUD Community Development Block Grants, FEMA Hazard Mitigation Grant Program, FDEP Legislative Appropriation grants. Services will include tasks such as; Assistance with U.S. Department of Housing and Urban Development Environmental Review Record Development for projects funded with Community Development Block Grant Funds. Reviewing, monitoring, evaluating and acting upon documentation required for Construction Contract compliance.

[End of Scope of Services - Remainder of this page left intentionally blank]

EXHIBIT "2"

Task Authorization Template

Consisting of 4 Pages

TASK AUTHORIZATION NO. ___
Master Contract for Services dated _____
Between the City of Port Orange, Florida and Kimley-Horn and Associates, Inc.

THIS Task Authorization is entered into by and between the **CITY OF PORT ORANGE, FLORIDA**, a chartered municipal corporation with its principal place of business at 1000 City Center Circle, Port Orange, Florida 32129 (the "City") and **KIMLEY-HORN AND ASSOCIATES, INC.**, North Carolina corporation, registered to transact business in Florida, with its principal place of business at 421 Fayetteville Street, Suite 600, Raleigh, North Carolina 27601 ("Engineer"), and hereinafter collectivelyreferred to as the "Parties," and is to that certain Master Contract relating to Professional Engineering Services for Public Works, Utilities and Environmental Services, as dated above, and any amendments thereto, hereinafter collectively referred to as the "Contract." The Parties, in exchange for the mutual covenants contained herein and in the Contract, agree as follows:

1. This Task Authorization expressly modifies the Contract and in the event of a conflict, the terms and conditions of this Task Authorization shall prevail.

2. In addition to all other terms and conditions contained in the Contract, Engineer shall provide services relating to _____, as more particularly described in the Scope of Services attached hereto and incorporated herein as Task Authorization Exhibit "1."

3. Engineer shall complete the services to be provided herein within _____ days of the date of written notice by the City to the Engineer.

4. In return for the services identified above, the City agrees to compensate Engineer at the prices set forth in Exhibit "1" attached hereto and made a part hereof, subject to a limit not to exceed $_____. All payments shall be governed by the Local Government Prompt Payment Act as Set forth in Sections 218.70 through 218.79, Florida Statutes, as amended.

5. *Truth-in-Negotiations*

(a) For any fixed fee, cost-plus-a-fixed-fee or guaranteed maximum-not-to-exceed compensation professional service contract or compensation in a Task Authorization over $150,000.00, Engineer shall execute a truth-in-negotiation certificate stating that wage rates and other factual unit costs supporting the compensation are accurate, complete, and current at the time of contracting. Any professional service contract or Task Authorization under which such certificate is required must contain a provision that the original contract price or compensation and any additions thereto will be adjusted to exclude any significant sums by which the City determines the contract price or compensation was increased due to inaccurate, incomplete, or noncurrent wage rates and other factual unit costs. All such contract or compensation adjustments must be made within one (1) year following the end of the Contract. Otherwise, such adjustments shall be deemed waived by the Engineer and null and void for the purposes of this Contract or Task Authorization. The signature on this Contract by the Engineer shall act as the execution of a truth- in-negotiation certificate stating that the wage rates and other factual unit costs supporting the compensation of this Contract are accurate, complete, and current at the time of contracting.

(b) Engineer's signature on this Contract or a Task Authorization shall act as execution of a truth-in-negotiation certificate stating that wage rates and other factual unit costs supporting the compensation set forth in this Contract or a Task Authorization are accurate, complete, and currentat the time of contract. The certification shall also constitute an affirmation that Engineer has disclosed all debts or fees owed to or that are pending before the City prior to the execution of this Contract of Task Authorization

6. This Task Authorization may be executed in one or more counterparts, each of which shall be deemed to be an original but all of which together shall constitute one and the same instrument. The delivery by facsimile or e-mail of an executed copy of this Task Authorization shall be deemed valid as if an original signature was delivered. No contract shall be formed between the Engineer and the City until the City signs this Task Authorization.

IN WITNESS WHEREOF, the Parties have made and executed this Task Authorization for the purposes herein expressed on the dates set forth below.

Witnesses:

KIMLEY-HORN AND ASSOCIATES, INC.

_____
Printed Name:_____

By:_____
Jonathan D. Thigpen, Senior Vice President

_____
Printed Name:_____

Date:_____

Witnesses:

CITY OF PORT ORANGE

_____

Printed Name:_____

By:_____
Donald Burnette, Mayor ***or***
Wayne Clark, City Manager

_____

Printed Name:_____

Date:_____

Witnesses:

ATTEST:

_____

Printed Name:_____

By:_____
Robin L. Fenwick, MMC, City Clerk

_____

Printed Name:_____

Date:_____

CERTIFICATE OF LIABILITY INSURANCE

DATE (MM/DD/YYYY): 3/18/2024

THIS CERTIFICATE IS ISSUED AS A MATTER OF INFORMATION ONLY AND CONFERS NO RIGHTS UPON THE CERTIFICATE HOLDER. THIS CERTIFICATE DOES NOT AFFIRMATIVELY OR NEGATIVELY AMEND, EXTEND OR ALTER THE COVERAGE AFFORDED BY THE POLICIES BELOW. THIS CERTIFICATE OF INSURANCE DOES NOT CONSTITUTE A CONTRACT BETWEEN THE ISSUING INSURER(S), AUTHORIZED REPRESENTATIVE OR PRODUCER, AND THE CERTIFICATE HOLDER.

IMPORTANT: If the certificate holder is an ADDITIONAL INSURED, the policy(ies) must have ADDITIONAL INSURED provisions or be endorsed. If SUBROGATION IS WAIVED, subject to the terms and conditions of the policy, certain policies may require an endorsement. A statement on this certificate does not confer rights to the certificate holder in lieu of such endorsement(s).

PRODUCER Edgewood Partners Ins. Center/Greyling 3780 Mansell Rd. Suite 370 Alpharetta GA 30022	**CONTACT NAME:** Jerry Noyola **PHONE (A/C, No, Ext):** 7702207699 **FAX (A/C, No):** **E-MAIL ADDRESS:** greylingcerts@greyling.com
INSURED KIMLASS Kimley-Horn and Associates, Inc. 421 Fayetteville Street, Suite 600 Raleigh, NC 27601	**INSURER(S) AFFORDING COVERAGE** / **NAIC #** **INSURER A :** National Union Fire Ins Co of Pittsburg — 19445 **INSURER B :** Allied World Assurance Co (U.S.) Inc. — 19489 **INSURER C :** New Hampshire Insurance Company — 23841 **INSURER D :** Lloyd's of London — 85202 **INSURER E :** **INSURER F :**

COVERAGES **CERTIFICATE NUMBER:** 221548564 **REVISION NUMBER:**

THIS IS TO CERTIFY THAT THE POLICIES OF INSURANCE LISTED BELOW HAVE BEEN ISSUED TO THE INSURED NAMED ABOVE FOR THE POLICY PERIOD INDICATED. NOTWITHSTANDING ANY REQUIREMENT, TERM OR CONDITION OF ANY CONTRACT OR OTHER DOCUMENT WITH RESPECT TO WHICH THIS CERTIFICATE MAY BE ISSUED OR MAY PERTAIN, THE INSURANCE AFFORDED BY THE POLICIES DESCRIBED HEREIN IS SUBJECT TO ALL THE TERMS, EXCLUSIONS AND CONDITIONS OF SUCH POLICIES. LIMITS SHOWN MAY HAVE BEEN REDUCED BY PAID CLAIMS.

INSR LTR	TYPE OF INSURANCE	ADDL INSD	SUBR WVD	POLICY NUMBER	POLICY EFF (MM/DD/YYYY)	POLICY EXP (MM/DD/YYYY)	LIMITS	
A	X **COMMERCIAL GENERAL LIABILITY** [ ] CLAIMS-MADE [X] OCCUR X Contractual Liab GEN'L AGGREGATE LIMIT APPLIES PER: [ ] POLICY [X] PRO-JECT [X] LOC [ ] OTHER:			GL5268169	4/1/2024	4/1/2025	EACH OCCURRENCE DAMAGE TO RENTED PREMISES (Ea occurrence) MED EXP (Any one person) PERSONAL & ADV INJURY GENERAL AGGREGATE PRODUCTS - COMP/OP AGG	$ 2,000,000 $ 1,000,000 $ 25,000 $ 2,000,000 $ 4,000,000 $ 4,000,000
A A	**AUTOMOBILE LIABILITY** X ANY AUTO [ ] OWNED AUTOS ONLY [ ] SCHEDULED AUTOS X HIRED AUTOS ONLY X NON-OWNED AUTOS ONLY			CA4489663 (AOS) CA2970071 (MA)	4/1/2024 4/1/2024	4/1/2025 4/1/2025	COMBINED SINGLE LIMIT (Ea accident) BODILY INJURY (Per person) BODILY INJURY (Per accident) PROPERTY DAMAGE (Per accident)	$ 2,000,000 $ $ $
B	X **UMBRELLA LIAB** X OCCUR X **EXCESS LIAB** [ ] CLAIMS-MADE [ ] DED X RETENTION $ 10,000			03127930	4/1/2024	4/1/2025	EACH OCCURRENCE AGGREGATE	$ 5,000,000 $ 5,000,000
C C	**WORKERS COMPENSATION AND EMPLOYERS' LIABILITY** Y / N ANYPROPRIETOR/PARTNER/EXECUTIVE OFFICER/MEMBER EXCLUDED? N **(Mandatory in NH)** If yes, describe under DESCRIPTION OF OPERATIONS below	N / A		WC015893685 (AOS) WC015893686 (CA)	4/1/2024 4/1/2024	4/1/2025 4/1/2025	X PER STATUTE [ ] OTH-ER E.L. EACH ACCIDENT E.L. DISEASE - EA EMPLOYEE E.L. DISEASE - POLICY LIMIT	 $ 2,000,000 $ 2,000,000 $ 2,000,000
D	Professional Liability			B0146LDUSA2404949	4/1/2024	4/1/2025	Per Claim Aggregate	$2,000,000 $2,000,000

DESCRIPTION OF OPERATIONS / LOCATIONS / VEHICLES (ACORD 101, Additional Remarks Schedule, may be attached if more space is required)

Re: Comprehensive Plan Update; Kelley Klepper. The City of Port Orange is named as an Additional Insured with respects to General & Automobile Liability where required by written contract. Waiver of Subrogation applies to Workers Compensation where required by written contract & allowed by law.

CERTIFICATE HOLDER

City of Port Orange
1000 City Center Circle
Port Orange FL 32129-0000

CANCELLATION

SHOULD ANY OF THE ABOVE DESCRIBED POLICIES BE CANCELLED BEFORE THE EXPIRATION DATE THEREOF, NOTICE WILL BE DELIVERED IN ACCORDANCE WITH THE POLICY PROVISIONS.

AUTHORIZED REPRESENTATIVE

Gregg Bachtel

© 1988-2015 ACORD CORPORATION. All rights reserved.

HUMAN TRAFFICKING AFFIDAVIT
(SECTION 787.06, FLORIDA STATUTES)

STATE OF FLORIDA §
§
COUNTY OF VOLUSIA §

The undersigned ("Affiant"), on behalf of the entity listed below ("Entity"), after being duly sworn, hereby attests as follows:

1. My name is Hao Chau. I am over the age of Twenty-one years old. I am the Vice President (Title) of Kimley-Horn and Associates, Inc. (Business Name) a non-governmental entity which does business in the State of Florida, hereinafter called the "Entity."

2. I have personal knowledge of each and every statement of fact contained herein, and each and every statement of fact is true and correct.

3. Entity does not use coercion, as defined in Section 787.06, Florida Statutes, for labor or services.

4. The undersigned is an officer or representative of the entity and is authorized to execute this affidavit on behalf of the Entity.

5. Under penalties of perjury, I declare that I have read the foregoing Human Trafficking Affidavit and that the facts stated herein are true.

Further Affiant sayeth not.

Date: August 29, 2024

Signed: [signature]
Print Name: Hao Chau
Title: Vice President

SUBSCRIBED AND SWORN before me by means of [XX] physical presence or [__] online notarization on the 29th day of August, 2024 by Hao Chau as Vice President on behalf of Kimley-Horn and Associates, Inc. who is personally known to me or who has produced ave corp. as identification.

(Notary Seal)
Notary Public State of Florida
Kelly Burdett
My Commission HH 537969
Expires 6/12/2028

Kelly Burdett HH 537969
Notary Public, State of Florida 6/12/2028
Printed name, commission and expiration of commission term

SKB.7.8.2024
CA7985

CITY COUNCIL AGENDA ITEM

COUNCIL MEETING DATE 3/18/2025

SUBJECT: (D6d) Approval of Task Authorization No. 22 with Kimley-Horn & Associates, Inc. for the Sugar Forest Stormwater Pump Station, Collection System, and Force Main

DEPARTMENT: Engineering

GOAL: 2 - Infrastructure

RECOMMENDED MOTION: Move to approve Task Authorization No 22 with Kimley-Horn & Associates, Inc. (CA7763) for the Sugar Forest Stormwater Pump Station, Collection System, and Force Main for an amount not to exceed $757,540.19; and authorize the Mayor and City Clerk to execute all contract documents.

SUMMARY: The Engineering Department is requesting approval of Task Authorization No 22 with Kimley-Horn & Associates, Inc. under the Master Contract for Engineering and Environmental Services (CA7763) for the Sugar Forest Stormwater Pump Station, Collection System, and Force Main for an amount not to exceed $757,540.19.

Due to recent flooding issues, Kimley-Horn and Associates, Inc. has presented a scope of work regarding the City of Port Orange Sugar Forest Stormwater Pump Station, collection system, and a stormwater force main design. The stormwater pump station will be located on the City-owned parcel at the corner of Madeline Avenue and Pepper Hill Road.

The proposed improvements include design of the stormwater collection system from the surrounding areas to the pond location, design of the stormwater collection pond, design of a new submersible stormwater pump station adjacent to the pond, design of approximately 8,000 linear feet of stormwater force main between the pump station location and the Halifax River, and other associates site improvements. This project has been identified in the Stormwater Master Plan and will provide flood mitigation to one of the hardest hit areas of the city from the recent hurricanes, Ian (2022) & Milton (2024).

Sugar Forest Drainage Improvements

PRESENTER: Junos Reed

ATTACHMENTS:

1.	Kimley-Horn and Associates, Inc Task Authorization No 22 - Sugar Forest Stormwater and Force Main	Kimley-Horn and Associates, Inc Task Authorization No 22 - Sugar Forest Stormwater and Force Main.pdf
2.	Sugar Forest Stormwater PS and FM Final proposal	Sugar Forest Stormwater PS and FM Final proposal.pdf
3.	Executed Kimley-Horn Renewal form 1-14-2025	Executed Kimley-Horn Renewal form 1-14-2025.pdf
4.	Kimley-Horn Contract CA7763	Kimley-Horn Contract CA7763.pdf
5.	Kimley-Horn and Associates, Inc. ALL 4.1.2025	Kimley-Horn and Associates, Inc. ALL 4.1.2025.pdf
6.	Kimely Horn - Affidavit for Human Trafficking_08.29.2024	Kimely Horn - Affidavit for Human Trafficking_08.29.2024.pdf

Julia Wiggins	Created/Initiated - 2/3/2025
Richard Colby	Approved - 2/3/2025
Junos Reed	Approved - 2/10/2025
Linda Truitt	Approved - 2/11/2025
Matthew Jones	Approved - 2/28/2025
Wayne Clark	Final Approval - 3/7/2025

TASK AUTHORIZATION NO. 22
Master Contract for Services dated January 18,2022
Between the City of Port Orange, Florida and Kimley-Horn and Associates, Inc.

THIS Task Authorization is entered into by and between the **CITY OF PORT ORANGE, FLORIDA**, a chartered municipal corporation with its principal place of business at 1000 City Center Circle, Port Orange, Florida 32129 (the "City") and **KIMLEY-HORN AND ASSOCIATES, INC.**, North Carolina corporation, registered to transact business in Florida, with its principal place of business at 421 Fayetteville Street, Suite 600, Raleigh, North Carolina 27601 ("Engineer"), and hereinafter collectively referred to as the "Parties," and is to that certain Master Contract relating to Professional Engineering Services for Public Works, Utilities and Environmental Services, as dated above, and any amendments thereto, hereinafter collectively referred to as the "Contract." The Parties, in exchange for the mutual covenants contained herein and in the Contract, agree as follows:

1. This Task Authorization expressly modifies the Contract and in the event of a conflict, the terms and conditions of this Task Authorization shall prevail.

2. In addition to all other terms and conditions contained in the Contract, Engineer shall provide services relating the Sugar Forest Stormwater Pump Station, Collection System, and Force Main; as more particularly described in the Scope of Services attached hereto and incorporated herein as Task Authorization Exhibit "1."

3. Engineer shall complete the services to be provided herein within Three (3) years (1,095 days) of the date ofwritten notice by the City to the Engineer.

4. In return for the services identified above, the City agrees to compensate Engineer at the prices set forth in Exhibit "1" attached hereto and made a part hereof, subject to a limit not to exceed **$757,540.19**. All payments shall be governed by the Local Government Prompt Payment Act as Set forth in Sections 218.70 through 218.79, Florida Statutes, as amended.

5. *Truth-in-Negotiations*

(a) For any fixed fee, cost-plus-a-fixed-fee or guaranteed maximum-not-to-exceed compensation professional service contract or compensation in a Task Authorization over $150,000.00, Engineer shall execute a truth-in-negotiation certificate stating that wage rates and other factual unit costs supporting the compensation are accurate, complete, and current at the time of contracting. Any professional service contractor Task Authorization under which such certificate is required must contain a provision that the original contract price or compensation and any additions thereto will be adjusted to exclude any significant sums by which the City determines the contract price or compensation was increased due to inaccurate, incomplete, or noncurrent wage rates and other factual unit costs. All such contract or compensation adjustments must be made within one (1) year following the end of the Contract. Otherwise, such adjustments shall be deemed waived by the Engineer and null and void for the purposes of this Contract or Task Authorization. The signature on this Contract by the Engineer shall act as the execution of a truth- in-negotiation certificate stating that the wage rates and other factual unit costs supporting the compensation of this Contract are accurate, complete, and current at the time of contracting.

(b) Engineer's signature on this Contract or a Task Authorization shall act as execution of a truth-in-negotiation certificate stating that wage rates and other factual unit costs supporting the compensation set forth in this Contract or a Task Authorization are accurate, complete, and current at the time of contract. The certification shall also constitute an affirmation that Engineer has disclosed all debts or fees owed to or that are pending before the City prior to the execution of this Contract of Task Authorization.

6. This Task Authorization may be executed in one or more counterparts, each of which shall be deemed to be an original but all of which together shall constitute one and the same instrument. The delivery by facsimile or e-mail of an executed copy of this Task Authorization shall be deemed valid as if an original signature was delivered. No contract shall be formed between the Engineer and the City until the City signs this Task Authorization.

IN WITNESS WHEREOF, the Parties have made and executed this Task Authorization for the purposes herein expressed on the dates set forth below.

Witnesses:

KIMLEY-HORN AND ASSOCIATES, INC.

_____ By: _____

Printed Name: _____ Jonathan D. Thigpen, Senior Vice President

_____ Date: _____

Printed Name: _____

At this time the City <u>does not</u> accept electronic/digital signatures. A wet signature is required for this document.

City of Port Orange

By:

Scott Stiltner, Mayor

Date:

Attest:

By:

Robin L. Fenwick, MMC, City Clerk

Date:

EXHIBIT "1"

Engineer's Proposal

Consisting of 7 Pages

Kimley»Horn

PROPOSAL FOR SUGAR FOREST STORMWATER PUMP STATION, COLLECTION SYSTEM, AND FORCE MAIN

Describing a specific agreement between Kimley-Horn and Associates, Inc. (Kimley-Horn), and The City of Port Orange (the Client or the City) in accordance with the terms of the Master Agreement for Continuing Professional Services dated January 18, 2022, which is incorporated herein by reference.

Project Understanding

The scope of work presented below was prepared following discussions with the City of Port Orange staff regarding the City of Port Orange Sugar Forest Stormwater Pump Station, collection system, and force main design. The stormwater pump station will be located on the City owned parcel at the corner of Madeline Avenue and Pepper Hill Road. The proposed improvements include design of the stormwater collection system, onsite stormwater collection pond, design of a new submersible stormwater pump station, design of new electrical and controls, design of approximately 8,000 linear feet of stormwater force main between the pump station location and the Halifax River, and associated site improvements.

Specific Scope of Basic Services:

Task 1: Preliminary Design

A. Kimley-Horn will attend a kick-off meeting with the City of Port Orange to review the project scope and discuss project elements to be included within the design plans.

B. Kimley-Horn will attend (1) pre-application meeting with the following agencies: St. Johns River Water Management District (SJRWMD), Florida East Coast Railway (FEC), Army Corps of Engineers (ACOE), Florida Department of Environmental Protection (FDEP) and Florida Department of Transportation (FDOT).

C. Kimley-Horn will enlist the services of a survey subconsultant, L&S Diversified, to perform boundary and topographic survey, and utility locates along the proposed collection system and force main route. The collection system route will include Sugar House Dr between Jackson Street and Madeline Avenue, as well as Pepper Hill Road to Hudon Lane, to Winchester Drive. and the force main route will proceed along Madeline Avenue, down Charles Street until reaching Riverwalk Park along the Halifax River. L&S Diversified will provide a topographic survey with Subsurface Utility designations performed along the route to aid the design and construction of the proposed force main. The apparent right-of-way will also be established along the route. The limits of the survey will extend from the edge of the right-of-way on both ends along the route. The survey also includes up to 100 subsurface utility excavations (SUE) of which 50 of the subsurface utility excavations will occur within natural ground and 50 will occur within a hard surface.

D. Kimley-Horn will enlist the services of a geotechnical subconsultant to provide soils and materials analysis necessary for the design of the proposed pump station holding pond.

E. Kimley-Horn will evaluate the existing stormwater system needs local to the direct vicinity of the pump station (Sugarhouse Dr., Sugar House Blvd., Winchester Dr., Hudson Ln., and Pepper Hill Rd). This analysis will include drainage modeling and

collection system routing calculations to size the proposed pump station, holding pond, and local collection system.

F. Kimley-Horn will prepare conceptual plans for the pump station which shall include proposed pump station layout, site plan, and civil and mechanical design for the pump station site. Conceptual plans will also include the proposed local storm collection system layout, the proposed force main route, and applicable section views and details. The proposed force main is anticipated to be at least 18-in in diameter and will follow Madeline Avenue and Charles Street to the east, discharging into the Halifax River. The force main will cross under the Florida East Coast (FEC) railroad and US-1, and discharge into the Halifax River, requiring additional permitting and agency coordination.

G. Kimley-Horn will conduct a site visit, which will include field flagging the wetlands in accordance with the State unified wetland delineation methodologies described in Chapter 62-340, Florida Administrative Code (FAC) and the United States Army Corps of Engineers (USACE) 1987 Wetland Delineation Manual and regional supplement. Kimley-Horn will coordinate with the surveyor (subconsultant) to incorporate the flags into the site plan. Kimley-Horn will also conduct a benthic resource/submerged aquatic vegetation survey adjacent to the site, during the appropriate survey period (June through September). The benthic survey will be conducted in general accordance with the National Marine Fisheries Service (NMFS) methodology recommendations for sampling Halophila johnsonii at large-area project sites. The surveys will employ a quantitative sampling of one square meter quadrats at regular intervals along a transect line. Each transect location will be accessed from the adjacent shoreline. Qualitative and quantitative sampling will be conducted by two biologists using snorkeling gear. The percent coverage of seagrass, species composition, substrate type, and other benthic resources will be documented at each quadrat along the transect line. Environmental conditions including weather, visibility, and tide cycles at the start and end of the surveys will be noted. Listed species or their habitat will also be noted during this site visit. Following the survey, a technical memorandum will be prepared summarizing results, including a discussion of methodology and results, with figures illustrating location and percentage of seagrass by species within each polygon (if seagrass is present). The technical memorandums will be provided to state and federal regulatory agencies during the environmental permitting process.

H. Kimley-Horn will enlist the services of an electrical engineering subconsultant, Electrical Design Associates (EDA) to perform the required electrical design for the proposed pump station modifications. This work will include power, lighting, lightning protection and limited access alarm points. Electrical design drawings will be submitted for City review at the 90% design stage.

I. Kimley-Horn will attend one (1) meeting with City staff to review the conceptual drawings and receive comments.

Task 2: 60% Design

A. Kimley-Horn will analyze and design improvements to the existing local drainage system surrounding the proposed pump station (Sugarhouse Dr., Sugar House Blvd., Winchester Dr., Hudson Ln., and Pepper Hill Rd). The drainage analysis will include the following:

    a. Evaluation of the existing drainage system

b. Design of a new gravity stormwater system, where practical, to reduce flooding and convey water to the proposed Madeline Avenue pump station holding pond

c. Design one (1) stormwater management facility to serve as a holding pond for the proposed stormwater pump. It is anticipated that this facility will receive the outfall from the proposed gravity stormwater system.

d. Design a stormwater force main connection to the Halifax River.

e. Create a Stormwater Management Report for the proposed design to be used for permitting with SJRWMD

B. Kimley-Horn will prepare 60% design plans and specifications for the proposed pump station, stormwater collection system design, force main design and pump station electrical improvements.

C. Kimley-Horn will prepare plan sheets, notes, and details on 11"x17" half size sheets. The 60% plans will include the following sheets necessary to convey the intent and scope of the project for the purposes of construction.

- Cover and general sheets
- Civil plan sheets
- Proposed pump station site
- Proposed plan sheets for force main design (approximately 20 sheets)
- Mechanical Pump station design sheets
- Utility Design Detail sheets
- FDOT standard detail sheets
- Drainage Map(s)
- Summary of Drainage Structures
- Miscellaneous Drainage Detail Sheet(s)
- Erosion Control Plan Sheet(s)
- Stormwater Pollution Prevention Plan (SWPPP) Sheet(s)

D. Kimley-Horn will provide drainage modeling which will include the following:

a. Perform a general overview of any existing permits in the immediate vicinity of the project and review the existing City of Port Orange ICPR4 Stormwater Model.

b. Evaluate the design of the proposed improvements and update the City of Port Orange ICPR4 Stormwater Model to reflect the proposed improvements.

E. Kimley-Horn will submit the design plans, specifications, and OPC for the City's review at 60% completion.

F. Kimley-Horn will attend one (1) 60% review meeting with City staff to review City comments.

Task 3: Final Design

G. Kimley-Horn will prepare 90% and 100% design plans, specifications, and opinion of probable construction cost (OPC) for the proposed pump station, stormwater collection system design, force main design, and pump station electrical improvements, based on City feedback.

H. Kimley-Horn will submit the design plans, specifications, and OPC for the City's review at 90% and 100% completion.

I. Kimley-Horn will attend one (1) 90% review meeting with City staff to review City comments.

Task 4: Permitting Services

A. Kimley-Horn will prepare a Florida Department of Transportation (FDOT) Right of Way permit for the crossing of US-1. The scope consists of preparation of one permit application and supporting documents and response to a maximum of two reasonable requests for additional information. All permit application fees will be paid by the City.

B. Kimley-Horn will prepare a Florida East Coast Railway (FEC) Right of Way permit for the railroad crossing on Charles Street. The scope consists of preparation of one permit application and supporting documents and response to a maximum of two reasonable requests for additional information. All permit application fees will be paid by the City.

C. Kimley-Horn will support documentation for a General Environmental Resource Permit Application and a general construction permit for the modification of a collection/transmission system from FDEP. This scope assumes no wetland mitigation will be required. Once the application is submitted, Kimley-Horn will respond to one Request for Available Information (RAI) from FDEP. Any additional RAIs or meetings with FDEP will be considered additional services. All application fees shall be paid by the Client.

D. Kimley-Horn will prepare either a Nationwide Permit 12 or a Regional General Permit 14 application for submittal to the USACE. It is assumed that the force main will be installed a minimum of 14 feet below the authorized depth of a federal channel, including a minimum of 25 feet outside channel edges, and bore pits will be more than 50 feet from top of bank of the Halifax River. These conditions will ensure that the project qualifies for the Nationwide 12 Permit or Regional General Permit 14. The application will include site plan drawings indicating the limits of proposed on-site excavation and fill areas, limits of existing wetlands and surface waters delineated in Task 1 (if applicable), proposed impacts to existing wetlands and surface waters (if applicable), and typical sections illustrating the proposed on-site excavation/fill activities. Kimley-Horn will coordinate with the USACE Section 408. Kimley-Horn will also coordinate with the USACE Real Estate Division to obtain a consent-to-

easement. It is assumed no wetland mitigation will be required from the USACE. Once the application is submitted, Kimley-Horn will respond to one RAI. Any additional RAIs or meetings with USACE will be considered additional services. All permit application fees shall be paid by the Client.

E. Kimley-Horn will also coordinate with the US Fish and Wildlife Service (USFWS) (during the USACE permitting process) regarding possible listed species impacts (i.e. West Indian manatee, sea turtles). If the USFWS requires detailed listed species surveys, then a separate scope and fee will be prepared. Kimley-Horn will also coordinate with the National Marine Fisheries Service (NMFS) (during the USACE permitting process) regarding possible Essential Fish Habitat (EFH) impacts. If the NMFS requires detailed listed species surveys, then a separate scope and fee will be prepared.

F. It is anticipated that the drainage and pond improvements will require a St. Johns River Water Management District (SJRWMD) Environmental Resource Permit (ERP). Kimley-Horn will prepare and submit a permit application package to the SJRWMD and will respond to up to two (2) Requests for Additional Information (RAI) from the SJRWMD. All permit application fees will be paid by the City.

Task 5: Bidding Services

A. Prepare one (1) separate bid package consisting of plans, permits, and specifications (in CSI or EJCDC format) to be included in the City's bid package.

B. Participate in one (1) pre-bid conference as the City's engineering representative. The City will be responsible for coordinating, scheduling, and administering the pre-bid conference.

C. Respond to Requests for Information (RFIs) and prepare bid addenda as necessary during the bid process. The City will be responsible for addenda distribution.

D. Review the bid responses and tabulate the results and provide the City with a written bid tabulation record along with a selection recommendation.

Schedule:

These services will be completed as expeditiously as possible. Kimley-Horn will begin services within 7 calendar days upon receipt of an executed agreement and will complete services according to a mutually agreeable schedule.

Deliverables:

Deliverables for this project include the following:

- Conceptual plans
- 60% plans, drainage report, specifications, opinion of probable construction costs
- 90% plans, drainage report, specifications, opinion of probable construction costs
- 100% Bid Ready plans, drainage report, specifications and final opinion of probable construction costs

Kimley»Horn

Method of Compensation:

Kimley-Horn will perform these services for the total lump sum fee of $757,540.19 inclusive of expenses. Invoices will be billed on a percent complete basis per task. A breakdown of the fee by task is as follows:

Task	*Description*	*Subconsultant*	*Kimley-Horn*	*Lump Sum Fee*
1	Preliminary Design	$178,603.90	$124,474.00	$303,077.90
2	60% Design	$37,500	$200,120.72	$217,620.72
3	Final Design	$20,000	$134,536.28	$144,536.28
4	Permitting	$1,500	$54,601.44	$56,101.44
5	Bidding Services	$1,000	$5,203.85	$6,203.35
	SubTotal	$238,603.90	$518,936.29	$757,540.19
Total				**$757,540.19**

Other Special Terms:

Services provided under this agreement will be invoiced on a monthly basis. All invoices will include a description of services provided.

Additional Services:

Any services not specifically provided for in the above scope, as well as any changes in the City's requests, will be considered additional services and will be performed for an agreed upon fee or at our then current hourly rates. The following services are not included in this Scope, but can be provided for an additional fee:

1. Meetings at the City's request in excess of those specifically expressed in the aforementioned tasks including public meetings.
2. Coordination with other consultants such as a peer reviewer.
3. Preparation of application packages for FEMA FIRM Revisions.
4. Additional calibration of created models in excess of the amount of hours allotted for calibration specifically expressed in the aforementioned tasks.
5. Additional Studies, Cost Analysis, Site Plans, Renderings, or Exhibits that may be requested by FDEP or the City to obtain funding for construction projects.
6. Easement and property acquisition coordination
7. Utility coordination meetings
8. Structural design
9. Construction Phase Services
10. Additional permitting beyond that specifically outlined in the Scope of Services
11. Any services not specifically identified in the Scope of Services.

ACCEPTED:

CITY OF PORT ORANGE, FLORIDA	KIMLEY-HORN AND ASSOCIATES, INC.
BY: See Page 4 of Task Authorization No. 22	BY: _____ Jon Martin, PE
TITLE: _____	TITLE: Sr. Vice President
DATE: _____	DATE: _____

Kimley»Horn

PROPOSAL FOR SUGAR FOREST STORMWATER PUMP STATION, COLLECTION SYSTEM, AND FORCE MAIN

Describing a specific agreement between Kimley-Horn and Associates, Inc. (Kimley-Horn), and The City of Port Orange (the Client or the City) in accordance with the terms of the Master Agreement for Continuing Professional Services dated January 18, 2022, which is incorporated herein by reference.

Project Understanding

The scope of work presented below was prepared following discussions with the City of Port Orange staff regarding the City of Port Orange Sugar Forest Stormwater Pump Station, collection system, and force main design. The stormwater pump station will be located on the City owned parcel at the corner of Madeline Avenue and Pepper Hill Road. The proposed improvements include design of the stormwater collection system, onsite stormwater collection pond, design of a new submersible stormwater pump station, design of new electrical and controls, design of approximately 8,000 linear feet of stormwater force main between the pump station location and the Halifax River, and associated site improvements.

Specific Scope of Basic Services:

Task 1: Preliminary Design

A. Kimley-Horn will attend a kick-off meeting with the City of Port Orange to review the project scope and discuss project elements to be included within the design plans.

B. Kimley-Horn will attend (1) pre-application meeting with the following agencies: St. Johns River Water Management District (SJRWMD), Florida East Coast Railway (FEC), Army Corps of Engineers (ACOE), Florida Department of Environmental Protection (FDEP) and Florida Department of Transportation (FDOT).

C. Kimley-Horn will enlist the services of a survey subconsultant, L&S Diversified, to perform boundary and topographic survey, and utility locates along the proposed collection system and force main route. The collection system route will include Sugar House Dr between Jackson Street and Madeline Avenue, as well as Pepper Hill Road to Hudon Lane, to Winchester Drive. and the force main route will proceed along Madeline Avenue, down Charles Street until reaching Riverwalk Park along the Halifax River. L&S Diversified will provide a topographic survey with Subsurface Utility designations performed along the route to aid the design and construction of the proposed force main. The apparent right-of-way will also be established along the route. The limits of the survey will extend from the edge of the right-of-way on both ends along the route. The survey also includes up to 100 subsurface utility excavations (SUE) of which 50 of the subsurface utility excavations will occur within natural ground and 50 will occur within a hard surface.

D. Kimley-Horn will enlist the services of a geotechnical subconsultant to provide soils and materials analysis necessary for the design of the proposed pump station holding pond.

E. Kimley-Horn will evaluate the existing stormwater system needs local to the direct vicinity of the pump station (Sugarhouse Dr., Sugar House Blvd., Winchester Dr., Hudson Ln., and Pepper Hill Rd). This analysis will include drainage modeling and

collection system routing calculations to size the proposed pump station, holding pond, and local collection system.

F. Kimley-Horn will prepare conceptual plans for the pump station which shall include proposed pump station layout, site plan, and civil and mechanical design for the pump station site. Conceptual plans will also include the proposed local storm collection system layout, the proposed force main route, and applicable section views and details. The proposed force main is anticipated to be at least 18-in in diameter and will follow Madeline Avenue and Charles Street to the east, discharging into the Halifax River. The force main will cross under the Florida East Coast (FEC) railroad and US-1, and discharge into the Halifax River, requiring additional permitting and agency coordination.

G. Kimley-Horn will conduct a site visit, which will include field flagging the wetlands in accordance with the State unified wetland delineation methodologies described in Chapter 62-340, Florida Administrative Code (FAC) and the United States Army Corps of Engineers (USACE) 1987 Wetland Delineation Manual and regional supplement. Kimley-Horn will coordinate with the surveyor (subconsultant) to incorporate the flags into the site plan. Kimley-Horn will also conduct a benthic resource/submerged aquatic vegetation survey adjacent to the site, during the appropriate survey period (June through September). The benthic survey will be conducted in general accordance with the National Marine Fisheries Service (NMFS) methodology recommendations for sampling Halophila johnsonii at large-area project sites. The surveys will employ a quantitative sampling of one square meter quadrats at regular intervals along a transect line. Each transect location will be accessed from the adjacent shoreline. Qualitative and quantitative sampling will be conducted by two biologists using snorkeling gear. The percent coverage of seagrass, species composition, substrate type, and other benthic resources will be documented at each quadrat along the transect line. Environmental conditions including weather, visibility, and tide cycles at the start and end of the surveys will be noted. Listed species or their habitat will also be noted during this site visit. Following the survey, a technical memorandum will be prepared summarizing results, including a discussion of methodology and results, with figures illustrating location and percentage of seagrass by species within each polygon (if seagrass is present). The technical memorandums will be provided to state and federal regulatory agencies during the environmental permitting process.

H. Kimley-Horn will enlist the services of an electrical engineering subconsultant, Electrical Design Associates (EDA) to perform the required electrical design for the proposed pump station modifications. This work will include power, lighting, lightning protection and limited access alarm points. Electrical design drawings will be submitted for City review at the 90% design stage.

I. Kimley-Horn will attend one (1) meeting with City staff to review the conceptual drawings and receive comments.

Task 2: 60% Design

A. Kimley-Horn will analyze and design improvements to the existing local drainage system surrounding the proposed pump station (Sugarhouse Dr., Sugar House Blvd., Winchester Dr., Hudson Ln., and Pepper Hill Rd). The drainage analysis will include the following:

    a. Evaluation of the existing drainage system

b. Design of a new gravity stormwater system, where practical, to reduce flooding and convey water to the proposed Madeline Avenue pump station holding pond

c. Design one (1) stormwater management facility to serve as a holding pond for the proposed stormwater pump. It is anticipated that this facility will receive the outfall from the proposed gravity stormwater system.

d. Design a stormwater force main connection to the Halifax River.

e. Create a Stormwater Management Report for the proposed design to be used for permitting with SJRWMD

B. Kimley-Horn will prepare 60% design plans and specifications for the proposed pump station, stormwater collection system design, force main design and pump station electrical improvements.

C. Kimley-Horn will prepare plan sheets, notes, and details on 11"x17" half size sheets. The 60% plans will include the following sheets necessary to convey the intent and scope of the project for the purposes of construction.

- Cover and general sheets
- Civil plan sheets
- Proposed pump station site
- Proposed plan sheets for force main design (approximately 20 sheets)
- Mechanical Pump station design sheets
- Utility Design Detail sheets
- FDOT standard detail sheets
- Drainage Map(s)
- Summary of Drainage Structures
- Miscellaneous Drainage Detail Sheet(s)
- Erosion Control Plan Sheet(s)
- Stormwater Pollution Prevention Plan (SWPPP) Sheet(s)

D. Kimley-Horn will provide drainage modeling which will include the following:

a. Perform a general overview of any existing permits in the immediate vicinity of the project and review the existing City of Port Orange ICPR4 Stormwater Model.

b. Evaluate the design of the proposed improvements and update the City of Port Orange ICPR4 Stormwater Model to reflect the proposed improvements.

E. Kimley-Horn will submit the design plans, specifications, and OPC for the City's review at 60% completion.

F. Kimley-Horn will attend one (1) 60% review meeting with City staff to review City comments.

Task 3: Final Design

G. Kimley-Horn will prepare 90% and 100% design plans, specifications, and opinion of probable construction cost (OPC) for the proposed pump station, stormwater collection system design, force main design, and pump station electrical improvements, based on City feedback.

H. Kimley-Horn will submit the design plans, specifications, and OPC for the City's review at 90% and 100% completion.

I. Kimley-Horn will attend one (1) 90% review meeting with City staff to review City comments.

Task 4: Permitting Services

A. Kimley-Horn will prepare a Florida Department of Transportation (FDOT) Right of Way permit for the crossing of US-1. The scope consists of preparation of one permit application and supporting documents and response to a maximum of two reasonable requests for additional information. All permit application fees will be paid by the City.

B. Kimley-Horn will prepare a Florida East Coast Railway (FEC) Right of Way permit for the railroad crossing on Charles Street. The scope consists of preparation of one permit application and supporting documents and response to a maximum of two reasonable requests for additional information. All permit application fees will be paid by the City.

C. Kimley-Horn will support documentation for a General Environmental Resource Permit Application and a general construction permit for the modification of a collection/transmission system from FDEP. This scope assumes no wetland mitigation will be required. Once the application is submitted, Kimley-Horn will respond to one Request for Available Information (RAI) from FDEP. Any additional RAIs or meetings with FDEP will be considered additional services. All application fees shall be paid by the Client.

D. Kimley-Horn will prepare either a Nationwide Permit 12 or a Regional General Permit 14 application for submittal to the USACE. It is assumed that the force main will be installed a minimum of 14 feet below the authorized depth of a federal channel, including a minimum of 25 feet outside channel edges, and bore pits will be more than 50 feet from top of bank of the Halifax River. These conditions will ensure that the project qualifies for the Nationwide 12 Permit or Regional General Permit 14. The application will include site plan drawings indicating the limits of proposed on-site excavation and fill areas, limits of existing wetlands and surface waters delineated in Task 1 (if applicable), proposed impacts to existing wetlands and surface waters (if applicable), and typical sections illustrating the proposed on-site excavation/fill activities. Kimley-Horn will coordinate with the USACE Section 408. Kimley-Horn will also coordinate with the USACE Real Estate Division to obtain a consent-to-

easement. It is assumed no wetland mitigation will be required from the USACE. Once the application is submitted, Kimley-Horn will respond to one RAI. Any additional RAIs or meetings with USACE will be considered additional services. All permit application fees shall be paid by the Client.

E. Kimley-Horn will also coordinate with the US Fish and Wildlife Service (USFWS) (during the USACE permitting process) regarding possible listed species impacts (i.e. West Indian manatee, sea turtles). If the USFWS requires detailed listed species surveys, then a separate scope and fee will be prepared. Kimley-Horn will also coordinate with the National Marine Fisheries Service (NMFS) (during the USACE permitting process) regarding possible Essential Fish Habitat (EFH) impacts. If the NMFS requires detailed listed species surveys, then a separate scope and fee will be prepared.

F. It is anticipated that the drainage and pond improvements will require a St. Johns River Water Management District (SJRWMD) Environmental Resource Permit (ERP). Kimley-Horn will prepare and submit a permit application package to the SJRWMD and will respond to up to two (2) Requests for Additional Information (RAI) from the SJRWMD. All permit application fees will be paid by the City.

Task 5: Bidding Services

A. Prepare one (1) separate bid package consisting of plans, permits, and specifications (in CSI or EJCDC format) to be included in the City's bid package.

B. Participate in one (1) pre-bid conference as the City's engineering representative. The City will be responsible for coordinating, scheduling, and administering the pre-bid conference.

C. Respond to Requests for Information (RFIs) and prepare bid addenda as necessary during the bid process. The City will be responsible for addenda distribution.

D. Review the bid responses and tabulate the results and provide the City with a written bid tabulation record along with a selection recommendation.

Schedule:

These services will be completed as expeditiously as possible. Kimley-Horn will begin services within 7 calendar days upon receipt of an executed agreement and will complete services according to a mutually agreeable schedule.

Deliverables:

Deliverables for this project include the following:

- Conceptual plans
- 60% plans, drainage report, specifications, opinion of probable construction costs
- 90% plans, drainage report, specifications, opinion of probable construction costs
- 100% Bid Ready plans, drainage report, specifications and final opinion of probable construction costs

Kimley»Horn

Method of Compensation:

Kimley-Horn will perform these services for the total lump sum fee of $757,540.19 inclusive of expenses. Invoices will be billed on a percent complete basis per task. A breakdown of the fee by task is as follows:

Task	*Description*	*Subconsultant*	*Kimley-Horn*	*Lump Sum Fee*
1	Preliminary Design	$178,603.90	$124,474.00	$303,077.90
2	60% Design	$37,500	$200,120.72	$217,620.72
3	Final Design	$20,000	$134,536.28	$144,536.28
4	Permitting	$1,500	$54,601.44	$56,101.44
5	Bidding Services	$1,000	$5,203.85	$6,203.35
	SubTotal	$238,603.90	$518,936.29	$757,540.19
Total				**$757,540.19**

Other Special Terms:

Services provided under this agreement will be invoiced on a monthly basis. All invoices will include a description of services provided.

Additional Services:

Any services not specifically provided for in the above scope, as well as any changes in the City's requests, will be considered additional services and will be performed for an agreed upon fee or at our then current hourly rates. The following services are not included in this Scope, but can be provided for an additional fee:

1. Meetings at the City's request in excess of those specifically expressed in the aforementioned tasks including public meetings.
2. Coordination with other consultants such as a peer reviewer.
3. Preparation of application packages for FEMA FIRM Revisions.
4. Additional calibration of created models in excess of the amount of hours allotted for calibration specifically expressed in the aforementioned tasks.
5. Additional Studies, Cost Analysis, Site Plans, Renderings, or Exhibits that may be requested by FDEP or the City to obtain funding for construction projects.
6. Easement and property acquisition coordination
7. Utility coordination meetings
8. Structural design
9. Construction Phase Services
10. Additional permitting beyond that specifically outlined in the Scope of Services
11. Any services not specifically identified in the Scope of Services.

ACCEPTED:

CITY OF PORT ORANGE, FLORIDA	KIMLEY-HORN AND ASSOCIATES, INC.
BY:_____	BY: _____ Jon Martin, PE
TITLE:_____	TITLE: Sr. Vice President
DATE:_____	DATE:_____

CITY OF PORT ORANGE

Agreement

RENEWAL FORM

*****THIS FORM IS VALID IF EXECUTED PRIOR TO THE ORIGINAL AGREEMENT/CONTRACT EXPIRATION DATE*****

Verify your records by providing the following information:

Name of Company/Organization: Kimley-Horn and Associates, Inc. ("Contractor")

Name of Contact Person: Jonathan Thigpen, Sr. Vice President

Mailing Address: 189 South Orange Avenue
Suite 100, Orlando, FL 32801

E-Mail Contact Address: Jonathan.thigpen@kimley-horn.com

Phone: (407) 898-1511 Fax: (561) 863-8175

☒ Standard Contract for Service CA No. 7763

☐ Piggyback Agreement CA No. _____

☐ Purchase Order No. _____

Renewal Term: From January 18, 2025 To: January 17, 2026

Contractor to Provide to City:

☐ ~~Updated Bond~~ N/A

☑ Insurance Certificate/City as additional insured and Waiver of Subrogation for WC

To be completed by the Contractor:

YES X **Contractor desires to renew this Agreement for another term at the same price, requirements, specifications, and conditions as provided for above.**

NO ____ **Contractor does not desire to renew this Agreement for another term.**

If this Contract is signed by an individual not identified as an Officer of the Entity in the records of the Florida Department of State, Division of Corporations, please provide written authorization for that individual to enter into contracts on behalf of the Entity.

Contractor's Authorized Representative: _____ **Date:** 1/13/25
Signature

Please return to the City of Port Orange as follows:

Department: Engineering Department Telephone: (386) 506-5751

Contract: Julia Wiggins, Business Manager Fax: (386) 756-5370

E-Mai: jwiggins@port-orange.org

For City Use Only:

Department Completes the Following:

☒ Renewal Accepted by the Department

☐ Bond received by the Department ***OR*** ☒ Bond not applicable

☒ Insurance Certificate received by the Department ***OR*** ☐ Insurance waived by City Manager

City Manager: _____ **Date:** 1/14/2025

Original Signed Form Must Be Returned to the City Clerk *Form 13024*

CITY OF PORT ORANGE MASTER CONTRACT PROFESSIONAL ENGINEERING SERVICES FOR PUBLIC WORKS, UTILITIES AND ENVIRONMENTAL SERVICES

This Standard Contract for Services ("Contract") is entered into this 18 day of Jan, **2022**, by and between the **CITY OF PORT ORANGE**, a Florida municipal corporation, whose principal address is 1000 City Center Circle, Port Orange, Florida 32129 (the "City"), and **KIMLEY-HORN AND ASSOCIATES, INC.**, a North Carolina corporation, registered to transact business in Florida, whose principal address is 421 Fayetteville Street, Suite 600, Raleigh, North Carolina 27601 ("Engineer"). The City and Engineer are collectively referred to herein as the "Parties."

The City and the Engineer for Ten Dollars ($10.00) and other good and valuable consideration hereby covenant and agree as set forth below.

1. *Provision of Services*

(a) The Engineer hereby agrees to provide the following services to the City of Port Orange:

(i) Professional continuous utility engineering consulting services to complete a wide range of projects led by the City of Port Orange Public Works and Utilities Department in accordance with Consultants Competitive Negotiation Act, and as more specifically described in Request for Statement of Qualifications 21-03 ("RFSQ 21-03"). This Contract together with RFSQ 21-03, Addendum No. 1, Addendum No. 2, and Engineer's Proposal, all of which may be referred to as the "Contract" and all of which are made a part hereof by reference shall constitute the formal written Contract between the City and Engineer. For convenience, Section 3, Scope of Services, of RFSQ 21-03, and the Schedule of Hourly Billing Rates as submitted by Engineer in Engineer's Proposal are attached hereto as Exhibit "1." A complete copy of RFSQ 21-03 is available in the Office of the City Clerk. Engineer represents that they are familiar with the documents that make up the Contract, as referenced hereinabove.

(b) The time, manner and place for performance of such services shall be:

Term: The term of this Contract shall commence on the date this Contract is signed by both of the Parties, and shall continue for a period of three (3) years, or until either party provides the other party written notice of its intent to terminate as provided in this Contract.

Renewals: Upon written agreement of the Parties and appropriation by City Council, this Contract may be renewed for up to two (2) additional one (1) year periods.

Manner and Place: The Engineer shall perform the services as outlined in each project assignment, in accordance with Standard Construction Details as required on all City owned facilities and properties (i.e. rights-of-way) and in a manner as required by all current federal, state, county, fire, building and land development codes, laws, ordinances and regulations, and with applicable permits and licenses per the City Code of Ordinances. Engineer shall not deliver goods or services without a fully executed task authorization and a written purchase order, signed by an authorized agent of the City of Port Orange.

Time and Essence: Engineer acknowledges that time is of the essence in the completion of the services contemplated by this contract, and shall complete all services within the timeline specified by this contract, and shall complete all services within the timeline specified in the project, and as reflected on the Notice to Proceed.

2. *Authorization for Services* This Contract standing alone does not authorize the performance of any work or services to be provided by the Engineer or require the City to place any orders for work or service. Authorization for performance of services by the Engineer under this Contract shall be in the form of written Task Authorization(s) ("Task Authorization") issued and executed by the City and signed by the Engineer. A sample Task Authorization is attached hereto as Exhibit "2."

a. All Task Authorizations issued under this Contract shall terminate at the expiration of the term of the Task Authorization, unless amended in writing by the parties. If a Task Authorization issued before the expiration of this Contract cannot be completed until after the expiration of this Contract, then this Contract shall expire on the Completion of Services under said Task Authorization, including any Amendments thereto, and after all work or services under the Task Authorization have been approved and accepted by the City's Contract Administrator. The obligations entered herein by both parties under this Contract and said Task Authorizations shall remain in full force and effect until completion of all work or services performed under this Contract and/or the Task Authorization.

b. No new or additional Task Authorization shall be issued after the original expiration date of this Contract. The extension of this Contract to coincide with the completion of an existing Task Authorization issued prior to the original expiration date of this Contract shall not be construed as or constitute authorization by the City or the Engineer to enter into a new or additional Task Authorization after the original expiration date of this Contract, unless this Contract is renewed prior to entering into a Contract for a new or additional Task Authorization.

3. *City Obligations* The City reserves the right to utilize lump sum or hourly rate compensation, at the hourly rate compensation as set forth in Exhibit "1." Rates may be adjusted on the anniversary of the effective date of this Contract, upon mutual written agreement of the Parties. The City's obligation to pay Engineer under this Contract is limited to an amount not to exceed the appropriated budget per fiscal year. All payments shall be governed by the Local Government Prompt Payment Act as set forth in Sections 218.70 through 218.79, Florida Statutes, as amended. The Engineer shall be paid compensation for all services, labor and material required thereby, and for all expenditures as specified in each Task Authorization. The fee shall be negotiated for each Project Task Authorization to this Contract. The Engineer shall submit a monthly statement for professional services rendered and expenses incurred to date of the statement. The statements for lump sum shall be based upon Engineer's estimate of the proportion of the total services actually completed at the time of billing to the total services to be performed. Such estimates are to be prepared by the Engineer and accompanied by such supporting data as may be required by the Contract Administrator. Compensation for any authorized cost which is not set forth in the Contract shall not exceed the actual, documented out-of-pocket cost to the Engineer, plus fifteen percent (15%). The Contract and Task Authorization(s) do not include retainer fees, nor is there a minimum fee guaranteed during the Contract period.

4. *Contract Administration* The Public Works and Utilities Director, Lynn Stevens, shall perform contract administration of this Contract. The City may change the contract administrator, from time to time and at any time, upon written notice to Engineer. For notice provisions, see the paragraph below entitled "Notice."

5. *Liens* Engineer acknowledges that Engineer shall not be entitled to lien the City or other public property.

6. *Statement of Engineering Services* The Engineer shall:

(a) Provide all certifications ("Engineer of Record" function) surveys, calculations, drawings, and any other documents required for special permits and authorizations from various government bodies or agencies having jurisdiction over the project;

(b) Prepare a time scaled diagram showing the dates of completion of various design phases and scheduled completion of working drawings and specifications and submit for Contract Administrator's review and approval;

(c) Verify and evaluate technical proposals furnished by the construction Engineer if requested by the City and provide such amplifications and explanations that may be necessary to clarify the intent of the drawings and specifications.

(d) Furnish consultation and advice as requested by the City during the construction of project, including Construction Administration Services (unless otherwise stipulated in a specific amendment attached hereto and made a part thereof);

(e) Furnish all other engineering services including without limitation those specified hereinafter and those required for the completion of specific projects as described in amendments to this contract:

(i) *Site Visits/Special Permits* The Engineer shall visit the site and shall initiate and hold such conferences with representatives of the City and other agencies, boards or government bodies having jurisdiction over the area the project covers and take such other action as may be necessary to obtain permits and authorizations (except the construction permits) and other data upon which to develop the design and preliminary sketches showing the contemplated project.

(ii) *Preliminary Sketches and Opinion of Probable Construction Costs* The preliminary sketches shall include plans, elevations and sections development in such detail and with such descriptive specifications as will clearly indicate the scope of work, and make possible a reasonable opinion of the construction cost and satisfy the requirements of permitting and regulatory agencies having jurisdiction. An opinion of probable construction costs shall be prepared.

(iii) *Working Drawings and Specifications* After the preliminary sketches and opinion of probable construction costs have been approved, the Engineer shall proceed with the preparation of working drawings and specifications as required by the Contract Administrator for the construction of said project. Working drawings, specifications and estimates shall be delivered to the Contract Administrator in such sequence and at such times as required by the City such that the construction work can be initiated promptly, procurement of materials made without delay and continuous prosecution of the work promoted, all in strict accordance with the approved design schedule as provided in Paragraph 5 (b) above. Working drawings and specifications shall be revised as necessary and as required by the Contract Administrator. After working drawings and specifications have been approved by the Contract Administrator, the Engineer shall furnish such number of sets of prints of the approved working drawings and such number of sets of the approved specifications, as may be required by the Contract Administrator.

(iv) *Original Drawings - Final Plans* Upon approval of final plans the Engineer shall deliver to the City one set of original drawings, in such medium and on such materials, as may be required by the Contract Administrator, suitable for blueprinting, showing approved constructed requirements (not of "as-built" construction unless otherwise stipulated), provided, however, that should this contract be terminated by the City the Engineer shall deliver to the City one set of originals as they exist at the time of termination. Such plans as are delivered shall become and remain the property of the City.

(v) *Revision of Final Drawings and Specifications* The engineer shall without additional fee correct and revise the drawings, specifications, or other materials furnished under this contract, if the Contract Administrator finds that such revision is necessary to correct errors or deficiencies for which the Engineer is responsible.

(vi) *Bidding* The Engineer shall perform all necessary engineering services required in connection with the competitive bidding for construction of the project and the preparation of all documents required thereof, including preparation of documents for separate bid packages for multiple contractors if so required by Contract Administrator.

7. *Responsibility of the Engineer* The Engineer shall be responsible for the professional and technical accuracy and the coordination of all designs, drawings, and specifications and other work or materials furnished by the Engineer under this contract. The Engineer shall without additional cost or fee to the City, correct or revise any errors or deficiencies in his performance.

8. *Reuse of Documents* The City shall have unlimited rights, for the benefit of the City in all drawings, designs, specifications, notes and other engineer's work produced in the performance of this contract, or in contemplation thereof, and all as-built drawings produced after completion of the work, including the right to use same on any other City work without additional cost to the City. All documents including Drawings and Specifications prepared by Engineer pursuant to this Contract are instruments of service in respect of the Project. They are not intended or represented to be suitable for reuse by City or others for any other project. Reuse for another project without written verification or adaption by Engineer for the specific purpose intended will be at City's risk. Any such verification or adaption will entitle Engineer to further compensation at rates to be agreed upon by City and Engineer. A reproducible set of plans and specifications shall be delivered to and become the property of the City upon completion of the Project by the Engineer.

9. *Expert Witness* The Engineer shall serve as an expert witness for the City in any legal proceedings regarding this project if the City so requests. The expert witness fee for Engineer shall be negotiated at the time the Engineer is called as an expert.

10. *Modifications to Scope of Work/Change Orders*

(a) Change Orders. The Contract Administrator, upon written approval as required by the City's Purchasing Policy, shall without notice to any sureties, have the authority to order changes in this Contract which affect the cost or time of performance. Such changes shall be ordered in writing specifically designated to be a change order. Such orders shall be limited to reasonable changes in one or more of the following: the services to be performed, the contract price or the time of the performance. The City will not be held liable for any changes which have not been properly authorized and approved in accordance with this Contract.

(b) If any change under this clause causes an increase or decrease in Engineer's cost of, or time required for the performance of the work hereunder, Engineer shall receive an equitable adjustment and the contract

shall be modified in writing accordingly. Any change shall include all costs and damages related to or incidental to such change.

(c) Any claim by the Engineer for adjustment under this clause shall be asserted in writing within thirty (30) days from the date of receipt by the Engineer of the notification of change unless the Contract Administrator grants a further period of time before the date of final payment under the contract. The Engineer shall proceed with the prosecution of the work as changed. Except as provided in this Contract, the Engineer shall not be entitled to payment for a charge for any extra work or material.

11. *Subcontractors or Sub-Subcontractors*

(a) Any subcontractors and outside associates or consultants required by the Engineer in connection with the services covered by the Contract will be limited to such individuals or firms as are specifically identified in an amendment to this Contract. Any substitution in such subcontractors, associates, or consultants shall be subject to the prior approval of the Contract Administrator.

(b) Engineer shall save and hold the City harmless from any and all claims or actions by Engineer's Subcontractors or Sub-subcontractors for payment of monies such Subcontractor of Sub-subcontractor claims to be owed by Engineer for work performed under this Contract.

(c) Nothing in this Contract shall create any obligation on the part of the City to pay directly to any Subcontractors of Sub-subcontractors or claims of a Subcontractor or Sub-subcontractors for amounts owed by Engineer to Subcontractor or Sub-subcontractor for work performed under this Contract.

(d) Engineer shall be fully responsible for all negligent acts and omissions of it Subcontractors and Sub-subcontractors and of persons directly or indirectly employed by them and of persons of whose negligent acts any of them may be liable to the same extent that it is responsible for the negligent acts and omissions of persons directly employed by it. Nothing in the Contract documents shall create any contractual relationship between any subcontractor and the City or any obligation on the part of the City to pay or to see to the payment of any moneys due any subcontractor to the extent practicable, evidence of amounts paid to the Engineer on account of specific work done in accordance with the schedule of values.

(e) The Engineer shall require all subcontractors or sub-subcontractors or outside associates employed in connection with the performance of this Contract to comply fully with the terms and conditions of this Contract between the City and the Engineer.

12. Termination

(a) The performance of work under this Contract may be terminated by the City in accordance with this clause in whole, or from time to time in part, whenever the Contract Administrator shall determine that such termination is in the best interest of the City. Any such termination shall be effected by delivery to the Engineer of a Notice of Termination specifying the extent to which performance of work under the Contract is terminated, and the date upon which such termination becomes effective.

(b) After receipt of a Notice of Termination, and except as otherwise directed by the Contract Administrator, the Engineer shall:

(i) Stop work under the Contract on the date and to the extent specified in the Notice of Termination.

(ii) Place no further orders or subcontracts for materials, services or facilities, except as may be necessary for completion of such portion of the work under the Contract as it is not terminated.

(iii) Terminate all orders and subcontracts to the extent that they relate to the performance of work terminated by the Notice of Termination.

(iv) Assign to the City in the manner, at the times and to the extent directed by the Contract Administrator, all of the right, title, and interest of the Engineer under the orders and subcontracts so terminated, in which case the City shall have the right, in its discretion, to settle or pay any or all claims arising out of the termination of such orders and subcontracts.

(v) Settle all outstanding liabilities and all claims arising out of such termination of orders and subcontracts, with the approval or ratification of the Contract Administrator, to the extent the City may require which approval or ratification shall be final for all the purposes of this clause.

(vi) Transfer title and deliver to the City in the manner, at the times, and to the extent, if any, directed by the Contract Administrator.

a. The fabricated or unfabricated parts, work in process, completed work, supplies, and other material produced as a part of, or acquired in connection with the performance of, the work terminated by the Notice of Termination; and

b. The completed or partially completed plans, drawings, information, and other property which, if the contract has been completed, would have been required to be furnished to the City.

(vii) Complete performance of such part of the work as shall not have been terminated by the Notice of Termination.

(c) After receipt of a Notice of Termination, the Engineer shall submit to the City's Contract Administrator his termination claim, in the form and with certification prescribed by the Contract Administrator. Such claim shall be submitted promptly but in no event later than thirty (30) days from the effective date of termination, unless one or more extensions in writing are granted by the Contract Administrator, upon request of the Engineer made in writing within such thirty (30) days period or authorized extension thereof. Upon failure of the Engineer to submit his termination claim within the time allowed, the Contract Administrator may determine on the basis of information available to him, the amount, if any, due to the Engineer by reason of the termination and shall thereupon pay to the Engineer the amount so determined.

(d) Subject to the provisions of Paragraph 11 (c), the Engineer and the Contract Administrator may agree upon the whole or any part of the amount or amounts to be paid the Engineer by reason of the total or partial termination of work pursuant to this clause, the total or partial termination of work pursuant to this clause, which amount or amounts may include a reasonable allowance for profit on work done; provided, that such agreed amount or amounts exclusive of settlement costs, shall not exceed the total contract price as reduced by the amount of payments otherwise made and as further reduced by the contract price of work not terminated. The Contract shall be amended accordingly and the Engineer shall be paid the agreed amount. Nothing in Paragraph 11 prescribing the amount to be paid to the Engineer, shall be deemed to limit, restrict, or otherwise determine or affect the amount or amounts which may be agreed upon to be paid.

(e) In the event of the failure of the Engineer and the Contract Administrator to agree as provided in Paragraph 11 (d), upon the whole amount to be paid to the Engineer by reason of the termination of work pursuant to this subparagraph, the Contract Administrator shall pay to the Engineer the amounts determined by the Contract Administrator, but without duplication of any amounts agreed upon, as follows:

(i) For completed work and services accepted by the City, the price or prices specified in the contract for such work, less any payments previously made.

(ii) The total of:

a. The costs incurred in the performance of the work and service terminated, including initial costs and preparatory expenses allocable thereto, but exclusive of any costs attributable to the work and services paid or to be paid for under Paragraph 11 (e)(i) hereof;

b. The cost of settling and paying claims arising out of the termination of work or services under subcontracts or orders as provided in Paragraph 11 (b)(v) above, which are properly chargeable to the terminated portion of the contract exclusive of amounts paid or payable on account of work or services delivered or furnished by subcontractors prior to the effective date of termination, which amounts shall be included in the costs payable under Paragraph 11 (a) above; and

c. A sum, as profit on Paragraph 11 (a) above, determined by the Contract Administrator to be fair and reasonable, not to exceed 5% of the Task Authorization.

(iii) In the event the contract is terminated because of Engineer's default, the City may take over the work and services and complete the same by contract or otherwise, and the Engineer shall be liable to the City for any increased cost of the project.

13. *Termination for Non-Appropriation of Funds*

(a) If funds are not appropriated for any succeeding fiscal years subsequent to the one in which this contract is entered into, for the purpose of this Contract, then the City may terminate this Contract upon thirty (30) days prior written notice to the Engineer. Should termination be accomplished in accordance with this Section, the City shall be liable only for payments due through the date of termination. The City agrees that should it terminate in accordance with this Section, it shall not obtain services which are substantially equal to or similar to those for which this contract was entered into. This provision shall survive any termination of the Contract.

14. *Engineer's Records*. The design, permits and all other records prepared by the Engineer, assembled for the City, subcontracted for the City, and any other records related to the scope of work in the possession of the Engineer shall be retained by the Engineer for the requisite time set forth in Florida Administrative Code Rule 1 B-24 http://dos.myflorida.com/library-archives/records-management/. Engineer may dispose of the records in accordance with Florida law, upon receipt of a signed written release signed by the City Attorney. During the term of this Contract, as amended from time to time, Engineer agrees to indemnify the City for failure to comply with the requirements of this paragraph including costs of litigation and legal fees incurred through all appeals. City reserves the right to select and approve the defense attorney. The Engineer's obligations pursuant to this paragraph shall survive the termination of this Contract, and as amended from time to time.

15. *Examination of Records*

(a) The Engineer agrees that the City, or any duly authorized representative, shall, until the expiration of five (5) years after final payment hereunder, have access to and the right to examine and copy any pertinent books, documents, papers and records of the Engineer involving transactions related to this Contract.

(b) The Engineer further agrees to include in any subcontract for more than $10,000 entered into as a result of this Contract, a provision to the effect that the subcontractor agrees that the City or any duly authorized representative shall, until the expiration of five (5) years after final payment under the subcontract, have access to

and the right to examine and copy any pertinent books, documents, papers and records of such Engineer involved in transactions related to such subcontract, or this Contract. The term subcontract as used herein shall exclude purchase orders for public utility services at rates established for uniform applicability to the general public.

(c) The period of access provided in subparagraphs (a) and (b) above for records, books, documents and papers which may relate to any arbitration, litigation, or the settlement of claims arising out of the performance of this contract or any subcontract shall continue until any appeals, arbitration, litigation or claims shall have been finally disposed of.

16. *Public Records Compliance* Engineer shall comply with public records laws as set forth in Chapter 119, Florida Statutes, and shall specifically:

(a) Keep and maintain public records required by the City to perform the service.

(b) Upon request from the City's custodian of public records, provide the City with a copy of the requested record or allow the records to be inspected or copied within a reasonable time at a cost that does not exceed the cost provided in Section 119, Florida Statutes, or as otherwise provided by law.

(c) Ensure that public records that are exempt from public records disclosure requirements are not disclosed except as authorized by law for the duration of the Contract term and following completion of the Contract if the Engineer does not transfer the records to the City.

(d) Upon completion of the Contract, Engineer shall transfer to the City, at no cost, all public records in possession of the Engineer and destroy any duplicate public records that are exempt from public records disclosure requirements. All records stored electronically must be provided to the City, upon request from the City's custodian of public records, in a format that is compatible with the information technology systems of the City.

If Engineer does not comply with a public records request, the City shall deem the non-compliance a breach of this Contract, and the Engineer may be subject to penalties under Section 119.0701, Florida Statutes.

ENGINEER QUESTIONS RELATING TO ENGINEER'S DUTIES TO PROVIDE PUBLIC RECORDS RELATING TO THIS CONTRACT MUST BE FORWARDED TO THE OFFICE OF THE CITY CLERK, CITY HALL, 1000 CITY CENTER CIRCLE, PORT ORANGE, FLORIDA 32129; TELEPHONE: (386) 506-5563; E-MAIL: CITYCLERK@PORT-ORANGE.ORG.

17. *Insurance* Engineer shall maintain insurance, as required herein, during the life of this Contract. Engineer shall provide to the City, a certificate of insurance endorsing the City of Port Orange as an additional named insured. All insurance coverages of the Engineer shall be primary and non-contributory. All insurance coverages of the Engineer shall not seek contribution from any other insurance or self-insurance available to the City. For workers' compensation coverage, the Engineer's insurance certificate shall include the insurer's waiver of subrogation in lieu of endorsing the City as an additional insured for workers' compensation. The City shall not accept Workers' Compensation Exemptions Engineer may use leased employees if the Engineer ensures that all workers who access the jobsite are employees covered by the employee leasing company, and no non-employees are permitted to access the jobsite. Any Engineer using a leased employee shall complete the City's Leased Employee Affidavit Form Exhibit. Policies for Workers' Compensation may be issued by companies authorized as a group self-insurer by F.S. 440.572.

Policies other than Workers' Compensation shall be issued by insurers licensed and/or duly authorized under Florida Law to do business in the State of Florida and all insuring companies are required to have a minimum rating of "A-" in the "Best Key Rating Guide" published by A.M. Best & Company, Inc. Engineer shall not commence work under this Contract until the City has received a certificate or certificates of insurance with endorsement evidencing

the required insurance. Insurer shall provide the City written notice of cancellation, nonrenewal or any other changes in coverage no later than thirty (30) days prior to the effective date of the change and shall provide notice to the City no later than 10 days after non-payment. The Certificates of Insurance and required insurance policies shall contain provisions that thirty (30) days prior written notice shall be given to the City of any cancellation, intent not to renew, or reduction in the policies or coverages.

Engineer shall require and ensure each of its subcontractors to maintain, until the completion of the subcontractor's work, insurance of the types and to the limits set forth herein. All insurance coverages shall be primary and non-contributory. All insurance coverages of the subcontractors shall not seek contribution from any other insurance or self-insurance available to the City. The Engineer is responsible for ensuring that its subcontractors maintain the required coverage. Failure of the Engineer to ensure the subcontractors maintain the required coverage, shall not relieve the Engineer of any contractual responsibility, obligation or liability.

The City reserves the right to increase insurance coverage as determined for higher risk contracts.

The acceptance by the City of any Certificate of Insurance does not constitute approval or agreement by the City that the insurance requirements have been satisfied or that the insurance policy shown on the Certificate of Insurance is in compliance with this Contract and does not waive the insurance required by this Contract.

Should at any time the Engineer or subcontractors not maintain the insurance coverages required herein, the City may terminate the Contract or at its sole discretion shall be authorized to purchase such coverages and charge the Engineer for such coverages purchased. The City shall be under no obligation to purchase such insurance, nor shall it be responsible for the coverages purchased or the insurance company or companies used. The decision of the City to purchase such insurance coverages shall in no way be construed to be a waiver of any of its rights under the Contract.

Standard Insurance Requirements			
	Insurance	**Standards**	**Additional Requirements**
☒	Workers' Compensation The Engineer shall maintain coverage for its employees with statutory workers' compensation limits, and no less than the limits indicated in the Schedule of Limits for Employers' Liability. Said coverage shall include a waiver of subrogation in favor of the City. **The City will not accept elective exemptions**. Any Engineer using an employee leasing company shall complete the Leased Employee Affidavit (Exhibit A).	Contract Amount — Limits Up to $10 million — Statutory/$500,000 $10 - $20 million — Statutory/$1,000,000 Contracts over $20 million To Be Determined by the City.	☐If Contract requires work on or about navigable waters, Longshoreman's and Harbor Workers' Coverage required. ☐If vessels involved, Jones Act coverage with limits of $500,000 required.

☒	Comprehensive General Liability (including Completed Operations and Contractual Liability	Limits:	Combined Single Limit Bodily Injury and Property damage $1,000,000 occurrence $1,000,000 aggregate	☐When work is on or under Railroad rights of way or properties, the Engineer shall take out and maintain during the life of the Contract, Railroad protective liability and property damage insurance in amounts as requested by the Railroad.
☒	Comprehensive Business, Automobile Liability to include all owned, hired and non-owned automobiles.	Limits:	Auto Liability Body Injury and Property Damage: $1,000,000 each occurrence $1,000,000 aggregate	
	Additional Insurance Requirements			
☐	Property Insurance Builders Risk. Additional Coverage:	Limits:	Buildings - Completed value of Contract. "All Risk" coverage on latest ISO for or its equivalent. Permission granted to occupy. Owner named as insured AIMA	If Agreement requires handling or installation of Owner's equipment, coverage should be furnished on "All Risk" form, including transit and Owner shall be named.
☒	Professional Liability	Limits:	Coverage - $1,000,000	
☐	Installation Floater (IT)	Limits:	Coverage - $ To be determined.	
☐	Engineer Pollution Liability	Limits:	Coverage - $1,000,000	
☒	Errors and Omissions	Limits:	Coverage - $1,000,000	
☐	Umbrella Policy	Limits:	Coverage – $ To be determined.	
☐	Payment and Performance Bond Required	Limits:	Coverage - Equal to amount of Contract.	
☐	**City Manager waives Payment and Performance Bond for work under $25,000.00.**			
☐	**Unless otherwise required by law, City Manager waives Insurance for FOB goods under $25,000.00.**			

18. *Assignability of Contract* Neither this contract, nor any part hereof, may be assigned by the Engineer to any other party without the express written approval of the City Council.

19. *Sovereign Immunity*. The City expressly retains all rights, benefits and immunities of sovereign immunity in accordance with Section 768.28, Florida Statutes. Notwithstanding anything set forth in any section of this Contract to the contrary, nothing in this Contract shall be deemed as a waiver of immunity or limits of liability of the City beyond any statutory limited waiver of immunity or limits of liability which may have been adopted by the Florida Legislature or may be adopted by the Florida Legislature and the cap on the amount and liability of the City for damages regardless of the number or nature of claims in tort or equity shall not exceed the dollar amount set by the legislature for tort. Nothing in this Contract shall inure to the benefit of any third party for the purpose of allowing any claim against the City which would otherwise be barred under the Doctrine of Sovereign Immunity or operation of law.

20. *Liability for Loss or Damage*

(a) Engineer shall be liable for any loss of, or damage to, City property caused by the negligence, recklessness, or intended wrongful misconduct of Engineer, his/its agents, servants and employees and shall indemnify and save the City harmless against all actions, proceedings, claims, demands, costs, damages and expenses, including attorney's fees, by reason of any suit or action brought for any actual or alleged injury to or death

of any person or damage to property other than City property, to the extent caused by negligent performance of the Contract by Engineer, his/its agents, servants and employees. Engineer shall submit a full written report to the Finance Director within twenty-four (24) hours following the occurrence of such damage, loss or injury.

21. *Non-discrimination*. During the performance of this Contract, Engineer agrees as follows:

(a) Engineer will not discriminate against any employee or applicant for employment because of race, religion, color, sex, disability, marital status, age or national origin, except where such is a bona-fide occupational qualification reasonably necessary to the normal operation of Engineer. Engineer agrees to post in conspicuous places, available to employees and applicants for employment, notices setting forth the provisions of this non-discrimination clause. Engineer agrees and fully supports and complies with the Americans with Disabilities Act of 1990.

(b) Engineer shall state in all solicitations or advertisements for employees placed by or on behalf of Engineer that Engineer is an equal opportunity employer.

(c) Notices, advertisements and solicitations placed in accordance with federal law, rule or regulation shall be deemed sufficient compliance with this provision. Engineer shall include the provisions of the foregoing subparagraphs (a), (b), and (c) in every subcontract or purchase order of over $10,000 so that the provisions will be binding upon each subcontractor or vendor.

22. *E-Verify*. Engineer shall utilize the U.S. Department of Homeland Security's E-Verify system to verify the employment eligibility of all new employees hired by the Engineer on or after the effective date of this Contract and thereafter during the remaining term of this Contract, including all subcontractors. Any subcontract entered into by Engineer with any subcontractor performing work under this Contract shall include the following language: "The Sub-Engineer shall utilize the U.S. Department of Homeland Security's E-Verify system to verify the employment eligibility of all new employees hired by the Engineer on or after the effective date of this Contract and thereafter during the remaining term of the Contract." The Engineer covenants and agrees that if it is found in violation of this section of the Executive Order, such violation shall be a material breach of this Contract and Engineer shall indemnify, defend and hold harmless the City from any fines or penalties levied by a government agency, including the loss or repayment of grant funds by the City.

23. *Disputes* The City Manager, who shall reduce his decision to writing and mail or otherwise furnish a copy thereof to Engineer, shall decide disputes with respect to this Contract in the first instance. The decision shall be final and binding unless, within ten (10) days from the date of receipt of the decision of the City Manager, appeal is made to the City Council. The decision of the City Council shall be final and binding unless set aside by a court of competent jurisdiction as fraudulent, capricious, arbitrary, or so grossly erroneous as necessary to imply bad faith, or not to be supported by any evidence. Pending a final determination of a properly appealed decision of the City Council, Engineer shall proceed diligently with the performance of this Contract in accordance with that decision.

24. *Force Majeure* Neither party shall be liable for any delay in performance or failure to perform any obligation hereunder if, and to the extent that, such failure or delay is caused by an event of Force Majeure. Force Majeure shall mean any act, event or condition that is beyond the party's reasonable control, that materially and adversely affects the party's ability to perform its obligations hereunder, and that is not the result of the party's willful neglect, error, omission or failure to exercise reasonable due diligence.

25. *Controlling Law* **THIS AGREEMENT CONTAINS IMPORTANT MATTERS AFFECTING LEGAL RIGHTS AND IS ACCEPTED AND ENTERED INTO IN FLORIDA AND ANY QUESTION REGARDING ITS VALIDITY, CONSTRUCTION, ENFORCEMENT, OR PERFORMANCE SHALL BE GOVERNED BY FLORIDA LAW. ANY**

LEGAL PROCEEDING ARISING FROM OR IN ANY WAY REGARDING THE AGREEMENT SHALL HAVE ITS VENUE LOCATED EXCLUSIVELY IN THE CIRCUIT COURT OF VOLUSIA COUNTY, FLORIDA, AND THE PARTIES HEREBY EXPRESSLY CONSENT AND SUBMIT THEMSELVES TO THE PERSONAL JURISDICTION AND VENUE OF THE COURT.

26. *Additional Provisions*. This Contract includes all additional provisions as may have been outlined in written quotes and purchase orders and any attachments or exhibits to this Contract whether delivered herewith or subsequently approved as a part hereof, such as drawings or technical specifications prepared in the performance of this work. In the event of a conflict between any attachments or exhibits to this Contract, and this Contract, the language of this Contract shall control.

28. *Integration* This Contract and the documents incorporated herein by reference shall constitute the whole agreement between the parties. There are no promises, terms, conditions, or obligations other than those contained herein, and this Contract shall supersede all previous communications, representations, or agreements, written or verbal, between the parties hereto.

29. *Notice* For purposes of this agreement, notices shall be sent as follows:

City:
City of Port Orange
Attention: City Manager
1000 City Center Circle
Port Orange, Florida 32129
(386) 506-5501

Copy to:
City of Port Orange
Attention: Lynn Stevens, Public Works & Utilities Director
1000 City Center Circle
Port Orange, Florida 32129
(386) 506-5575

Engineer:
~~Kimley-Horn and Associates, Inc.~~
Attention: Brian A. Good, ~~Director~~
421 Fayetteville ~~Street~~
Suite ~~600~~
~~Raleigh, North Carolina 27601~~

Attention: Jonathan D. Thigpen, Senior Vice President
189 South Orange Avenue
Suite 1000
Orlando, Florida 32801
(407) 898-1511 – Telephone
(561) 863-8175 – Facsimile
~~Maybe.White@kimley-horn.com~~ jonathan.thigpen@kimley-horn.com

Any notice or other communication given under the Contract will be in writing and delivered by hand, sent by facsimile (provided acknowledgement of receipt thereof is delivered to the sender), sent by certified, registered mail, or sent by any nationally recognized overnight courier service to the addresses provided herein. The parties may,

from time to time and at any time, change their respective addresses and each will have the right to specify as its address any other address by at least 10 days written notice to the other party.

30. *Truth-in-Negotiations*

(a) For any fixed fee, cost-plus-a-fixed-fee or guaranteed maximum-not-to-exceed compensation professional service contract or compensation in a Task Authorization over $150,000.00, Engineer shall execute a truth-in-negotiation certificate stating that wage rates and other factual unit costs supporting the compensation are accurate, complete, and current at the time of contracting. Any professional service contract or Task Authorization under which such certificate is required must contain a provision that the original contract price or compensation and any additions thereto will be adjusted to exclude any significant sums by which the City determines the contract price or compensation was increased due to inaccurate, incomplete, or noncurrent wage rates and other factual unit costs. All such contract or compensation adjustments must be made within one (1) year following the end of the Contract. Otherwise, such adjustments shall be deemed waived by the Engineer and null and void for the purposes of this Contract or Task Authorization. The signature on this Contract by the Engineer shall act as the execution of a truth-in-negotiation certificate stating that the wage rates and other factual unit costs supporting the compensation of this Contract are accurate, complete, and current at the time of contracting.

(b) Engineer's signature on this Contract or a Task Authorization shall act as execution of a truth-in-negotiation certificate stating that wage rates and other factual unit costs supporting the compensation set forth in this Contract or a Task Authorization are accurate, complete, and current at the time of contract. The certification shall also constitute an affirmation that Engineer has disclosed all debts or fees owed to or that are pending before the City prior to the execution of this Contract of Task Authorization.

31. *Waiver of Breach and Materiality* Failure to enforce any provision of this Contract shall not be deemed a waiver of such provision or modification of this Contract. A waiver of any breach of a provision of this Contract shall not be deemed a waiver of any subsequent breach and shall not be construed as a modification of the terms of this Contract.

32. *Contract Construction*

This Agreement may be executed in one or more counterparts, each of which shall be deemed to be an original but all of which together shall constitute one and the same instrument. The delivery by facsimile or e-mail of an executed copy of this Agreement shall be deemed valid as if an original signature was delivered. No contract shall be formed between Engineer and the City until the City signs this Agreement.

33. *Authority to Sign* Each person signing this Agreement warrants that he or she is duly authorized to do so and to bind the respective party to the Agreement.

[Remainder of this page intentionally left blank]

Witnesses:

Printed Name: Nicole McConnell

Printed Name: Tucker Hunter

KIMLEY-HORN AND ASSOCIATES, INC.

By: _____
Jonathan D. Thigpen, Senior Vice President

If this Contract is signed by an individual not identified as the President of the corporation in the records of the Florida Department of State, Division of Corporations, please provide written authorization for that individual to enter into contracts on behalf of the corporation.

Date: January 7, 2022

STATE OF FLORIDA
COUNTY OF ORANGE

The foregoing instrument was acknowledged before me by means of ✓ physical presence or ___ online notarization, this 7th day of January, 2022, by Jonathan D. Thigpen, as Senior Vice President of Kimley-Horn and Associates, Inc., a North Carolina corporation, registered to transact business in Florida. He is ✓ personally known or ___ produced _____ as identification.

Notary Public, State of Florida
Printed, typed or stamped name, commission and expiration:

SUSAN M. GREMONPREZ
Commission # GG 298833
Expires February 9, 2023
Bonded Thru Troy Fain Insurance 800-385-7019

Witnesses:

Printed Name: Jamie Miller

Printed Name: Matt Jones

CITY OF PORT ORANGE

By: _____
Donald O. Burnette, Mayor

Date: 1/18/2022

STATE OF FLORIDA
COUNTY OF VOLUSIA

The foregoing instrument was acknowledged before me by means of ✓ physical presence or ___ online notarization, this 18 day of Jan., 2022, by Donald O. Burnette, as Mayor of the City of Port Orange, a Florida municipal corporation, on behalf of the city. He is ✓ personally known or ____ produced _____ as identification.

MATTHEW J. JONES
Commission # GG 931831
Expires January 23, 2024
Bonded Thru Troy Fain Insurance 800-385-7019

_____
Notary Public, State of Florida
Printed, typed or stamped name, commission and expiration:

Witnesses:

Printed Name: Jamie Miller

Printed Name: Matt Jones

ATTEST:

By: _____
Robin L. Fenwick, MMC, City Clerk

Date: 1/18/2022

STATE OF FLORIDA
COUNTY OF VOLUSIA

The foregoing instrument was acknowledged before me, by means of ✓ physical presence or ___ online notarization, this 18 day of Jan., 2022, by Robin L. Fenwick, as City Clerk of the City of Port Orange, a Florida municipal corporation, on behalf of the city. She is ✓ personally known or ___ produced _____ as identification.

MATTHEW J. JONES
Commission # GG 931831
Expires January 23, 2024
Bonded Thru Troy Fain Insurance 800-385-7019

_____
Notary Public, State of Florida
Printed, typed or stamped name, commission and expiration:

EXHIBIT "1"

Engineer's Schedule of Hourly Billing Rates and RFSQ 21-03 Section 3

Consisting of 2 Pages

KIMLEY HORN AND ASSOCIATES
SCHEDULE OF HOURLY BILLING RATES

Labor Position/Classification Level	Hourly Rate
Principal	$300.00
Senior Project Manager	$230.00
Project Manager	$190.00
Senior Project Engineer	$210.00
Project Engineer	$170.00
Analyst 3	$145.00
Analyst 2	$125.00
Analyst 1	$115.00
Senior Environmental Scientist	$185.00
Environmental Scientist	$130.00
GIS Analyst	$130.00
Grants Coordinator	$175.00
Sr CAD Designer	$185.00
CAD Designer	$150.00
CAD Technician	$110.00
Administrative	$95.00
Clerical	$75.00

Notes:
1. Billing rates listed in the table above are for the period from FY2022 through FY2024.
2. The salary multiplier billing rates include all payroll burden, overheads, and profit.
3. Subconsultants will be billed at 115% of actual cost
~~4. Standard project expenses will be billed as an allocation equivalent to 5.0% of the labor fee.~~

SECTION 3 – SCOPE OF SERVICES AND REQUIREMENTS

SCOPE OF SERVICES

The City of Port Orange is soliciting proposals from qualified firms for professional continuous engineering consulting services to complete a wide range of needs lead by the City of Port Orange Public Works & Utilities Department. The City will select a minimum of three, and up to five firms who can provide all, some, or one of the category service disciplines outlined in the scope of services. Firms do not have to be able to provide all of the services listed in the scope of services. For instance, if a firm only provides Environmental Services then they should state that in their initial Statement and provide all of the supporting data within the submittal to support the type of services provided. Individual firms are the focus of this RFSQ process, therefore the City will not accept Statements of Qualifications submitted with multiple firms (i.e., teams). The City is seeking the most highly qualified firms in the following category service disciplines;

- **Public Utilities (Water, Wastewater, & Reclaimed Water):**
  - Analysis, survey, design, permitting, bidding assistance, engineering services during construction, and State Revolving Funds (SRF) loan assistance for the Cities water, wastewater, and reuse systems. Including but not limited to the Cities wastewater collection and treatment systems, raw water wells, raw water transmission, water treatment, and reclaimed water storage and distribution systems
- **Public Works (Stormwater, Roadways, and Sidewalls/Trails):**
  - Analysis, survey, design, permitting, bidding assistance and engineering during construction for the Cities roadways and sidewalks
  - General stormwater needs as required by the Stormwater Utility Program. The list of services shall consist of, but not be limited to, the following:
  - National Pollutant Discharge Elimination System (NPDES) program assistance and implementation,
  - Total Maximum Daily Load (TMDL) program assistance and implementation including, but not limited to, the evaluation and establishment of estuarine TMDLS and NNC, developing ecosystem goals and targets based on the requirements of the environmental and biological indicators, hydrodynamic modeling, water quality statistical analysis, natural systems analysis and habitat analysis,
  - Watershed management planning including, but not limited to, initial hydrologic and hydraulic modeling of the watersheds in Port Orange, as well as pollutant loading modeling and updates to existing Stormwater Management Master Plans of the watersheds,
  - Engineering analysis/design and permitting of capital improvement projects, and
  - Other stormwater/environmental needs that may arise.
- **Environmental Services:**
  - Provide services related to wetlands mitigation bank management, gopher tortoise mitigation bank management, potable drinking water Consumptive Use Permit (CUP) permit monitoring, reporting, and compliance assistance, hydrologic services related to potable water wellfield management and development
  - Monitoring, sampling, and reporting services as required for permits issued and regulated by various local and State agencies such as Consumptive Use Permitting and other operational permits issued to the City by St. Johns River Water Management, U.S. Army Corps of Engineers, and the Florida Department of Environmental Protection for the operation of the Cities Wetlands Mitigation Bank, Gopher Tortoise Mitigation Bank each have very specific and differing water sampling, monitoring, and reporting procedures and requirements.
- **Grant Compliance Assistance:**
  - Provide Grant Compliance assistance for local, state, and federally administered grants, including but not limited to, HUD Community Development Block Grants, FEMA Hazard Mitigation Grant Program, FDEP Legislative Appropriation grants. Services will include tasks such as; Assistance with U.S. Department of Housing and Urban Development Environmental Review Record Development for projects funded with Community Development Block Grant Funds. Reviewing, monitoring, evaluating and acting upon documentation required for Construction Contract compliance.

[End of Scope of Services - Remainder of this page left intentionally blank]

EXHIBIT "2"

Task Authorization Template

Consisting of 4 Pages

TASK AUTHORIZATION NO. ___
Master Contract for Services dated _____
Between the City of Port Orange, Florida and Kimley-Horn and Associates, Inc.

THIS Task Authorization is entered into by and between the **CITY OF PORT ORANGE, FLORIDA**, a chartered municipal corporation with its principal place of business at 1000 City Center Circle, Port Orange, Florida 32129 (the "City") and **KIMLEY-HORN AND ASSOCIATES, INC.**, North Carolina corporation, registered to transact business in Florida, with its principal place of business at 421 Fayetteville Street, Suite 600, Raleigh, North Carolina 27601 ("Engineer"), and hereinafter collectivelyreferred to as the "Parties," and is to that certain Master Contract relating to Professional Engineering Services for Public Works, Utilities and Environmental Services, as dated above, and any amendments thereto, hereinafter collectively referred to as the "Contract." The Parties, in exchange for the mutual covenants contained herein and in the Contract, agree as follows:

1. This Task Authorization expressly modifies the Contract and in the event of a conflict, the terms and conditions of this Task Authorization shall prevail.

2. In addition to all other terms and conditions contained in the Contract, Engineer shall provide services relating to _____, as more particularly described in the Scope of Services attached hereto and incorporated herein as Task Authorization Exhibit "1."

3. Engineer shall complete the services to be provided herein within _____ days of the date of written notice by the City to the Engineer.

4. In return for the services identified above, the City agrees to compensate Engineer at the prices set forth in Exhibit "1" attached hereto and made a part hereof, subject to a limit not to exceed $_____. All payments shall be governed by the Local Government Prompt Payment Act as Set forth in Sections 218.70 through 218.79, Florida Statutes, as amended.

5. *Truth-in-Negotiations*

(a) For any fixed fee, cost-plus-a-fixed-fee or guaranteed maximum-not-to-exceed compensation professional service contract or compensation in a Task Authorization over $150,000.00, Engineer shall execute a truth-in-negotiation certificate stating that wage rates and other factual unit costs supporting the compensation are accurate, complete, and current at the time of contracting. Any professional service contract or Task Authorization under which such certificate is required must contain a provision that the original contract price or compensation and any additions thereto will be adjusted to exclude any significant sums by which the City determines the contract price or compensation was increased due to inaccurate, incomplete, or noncurrent wage rates and other factual unit costs. All such contract or compensation adjustments must be made within one (1) year following the end of the Contract. Otherwise, such adjustments shall be deemed waived by the Engineer and null and void for the purposes of this Contract or Task Authorization. The signature on this Contract by the Engineer shall act as the execution of a truth- in-negotiation certificate stating that the wage rates and other factual unit costs supporting the compensation of this Contract are accurate, complete, and current at the time of contracting.

(b) Engineer's signature on this Contract or a Task Authorization shall act as execution of a truth-in-negotiation certificate stating that wage rates and other factual unit costs supporting the compensation set forth in this Contract or a Task Authorization are accurate, complete, and currentat the time of contract. The certification shall also constitute an affirmation that Engineer has disclosed all debts or fees owed to or that are pending before the City prior to the execution of this Contract of Task Authorization

6. This Task Authorization may be executed in one or more counterparts, each of which shall be deemed to be an original but all of which together shall constitute one and the same instrument. The delivery by facsimile or e-mail of an executed copy of this Task Authorization shall be deemed valid as if an original signature was delivered. No contract shall be formed between the Engineer and the City until the City signs this Task Authorization.

IN WITNESS WHEREOF, the Parties have made and executed this Task Authorization for the purposes herein expressed on the dates set forth below.

Witnesses:

KIMLEY-HORN AND ASSOCIATES, INC.

_____
Printed Name:_____

By:_____
Jonathan D. Thigpen, Senior Vice President

_____
Printed Name:_____

Date:_____

Witnesses:

CITY OF PORT ORANGE

_____

Printed Name:_____

By:_____
Donald Burnette, Mayor ***or***
Wayne Clark, City Manager

_____

Printed Name:_____

Date:_____

Witnesses:

ATTEST:

_____

Printed Name:_____

By:_____
Robin L. Fenwick, MMC, City Clerk

_____

Printed Name:_____

Date:_____

CERTIFICATE OF LIABILITY INSURANCE

DATE (MM/DD/YYYY): 3/18/2024

THIS CERTIFICATE IS ISSUED AS A MATTER OF INFORMATION ONLY AND CONFERS NO RIGHTS UPON THE CERTIFICATE HOLDER. THIS CERTIFICATE DOES NOT AFFIRMATIVELY OR NEGATIVELY AMEND, EXTEND OR ALTER THE COVERAGE AFFORDED BY THE POLICIES BELOW. THIS CERTIFICATE OF INSURANCE DOES NOT CONSTITUTE A CONTRACT BETWEEN THE ISSUING INSURER(S), AUTHORIZED REPRESENTATIVE OR PRODUCER, AND THE CERTIFICATE HOLDER.

IMPORTANT: If the certificate holder is an ADDITIONAL INSURED, the policy(ies) must have ADDITIONAL INSURED provisions or be endorsed. If SUBROGATION IS WAIVED, subject to the terms and conditions of the policy, certain policies may require an endorsement. A statement on this certificate does not confer rights to the certificate holder in lieu of such endorsement(s).

PRODUCER Edgewood Partners Ins. Center/Greyling 3780 Mansell Rd. Suite 370 Alpharetta GA 30022	**CONTACT NAME:** Jerry Noyola **PHONE (A/C, No, Ext):** 7702207699 **FAX (A/C, No):** **E-MAIL ADDRESS:** greylingcerts@greyling.com
INSURED KIMLASS Kimley-Horn and Associates, Inc. 421 Fayetteville Street, Suite 600 Raleigh, NC 27601	**INSURER(S) AFFORDING COVERAGE** / **NAIC #** **INSURER A :** National Union Fire Ins Co of Pittsburg — 19445 **INSURER B :** Allied World Assurance Co (U.S.) Inc. — 19489 **INSURER C :** New Hampshire Insurance Company — 23841 **INSURER D :** Lloyd's of London — 85202 **INSURER E :** **INSURER F :**

COVERAGES **CERTIFICATE NUMBER:** 221548564 **REVISION NUMBER:**

THIS IS TO CERTIFY THAT THE POLICIES OF INSURANCE LISTED BELOW HAVE BEEN ISSUED TO THE INSURED NAMED ABOVE FOR THE POLICY PERIOD INDICATED. NOTWITHSTANDING ANY REQUIREMENT, TERM OR CONDITION OF ANY CONTRACT OR OTHER DOCUMENT WITH RESPECT TO WHICH THIS CERTIFICATE MAY BE ISSUED OR MAY PERTAIN, THE INSURANCE AFFORDED BY THE POLICIES DESCRIBED HEREIN IS SUBJECT TO ALL THE TERMS, EXCLUSIONS AND CONDITIONS OF SUCH POLICIES. LIMITS SHOWN MAY HAVE BEEN REDUCED BY PAID CLAIMS.

INSR LTR	TYPE OF INSURANCE	ADDL INSD	SUBR WVD	POLICY NUMBER	POLICY EFF (MM/DD/YYYY)	POLICY EXP (MM/DD/YYYY)	LIMITS	
A	X **COMMERCIAL GENERAL LIABILITY** [ ] CLAIMS-MADE [X] OCCUR X Contractual Liab GEN'L AGGREGATE LIMIT APPLIES PER: [ ] POLICY [X] PRO-JECT [X] LOC [ ] OTHER:			GL5268169	4/1/2024	4/1/2025	EACH OCCURRENCE DAMAGE TO RENTED PREMISES (Ea occurrence) MED EXP (Any one person) PERSONAL & ADV INJURY GENERAL AGGREGATE PRODUCTS - COMP/OP AGG	$ 2,000,000 $ 1,000,000 $ 25,000 $ 2,000,000 $ 4,000,000 $ 4,000,000
A A	**AUTOMOBILE LIABILITY** X ANY AUTO [ ] OWNED AUTOS ONLY [ ] SCHEDULED AUTOS X HIRED AUTOS ONLY X NON-OWNED AUTOS ONLY			CA4489663 (AOS) CA2970071 (MA)	4/1/2024 4/1/2024	4/1/2025 4/1/2025	COMBINED SINGLE LIMIT (Ea accident) BODILY INJURY (Per person) BODILY INJURY (Per accident) PROPERTY DAMAGE (Per accident)	$ 2,000,000 $ $ $
B	X **UMBRELLA LIAB** X OCCUR X **EXCESS LIAB** [ ] CLAIMS-MADE [ ] DED X RETENTION $ 10,000			03127930	4/1/2024	4/1/2025	EACH OCCURRENCE AGGREGATE	$ 5,000,000 $ 5,000,000
C C	**WORKERS COMPENSATION AND EMPLOYERS' LIABILITY** Y / N ANYPROPRIETOR/PARTNER/EXECUTIVE OFFICER/MEMBER EXCLUDED? N **(Mandatory in NH)** If yes, describe under DESCRIPTION OF OPERATIONS below	N / A		WC015893685 (AOS) WC015893686 (CA)	4/1/2024 4/1/2024	4/1/2025 4/1/2025	X PER STATUTE [ ] OTH-ER E.L. EACH ACCIDENT E.L. DISEASE - EA EMPLOYEE E.L. DISEASE - POLICY LIMIT	 $ 2,000,000 $ 2,000,000 $ 2,000,000
D	Professional Liability			B0146LDUSA2404949	4/1/2024	4/1/2025	Per Claim Aggregate	$2,000,000 $2,000,000

DESCRIPTION OF OPERATIONS / LOCATIONS / VEHICLES (ACORD 101, Additional Remarks Schedule, may be attached if more space is required)

Re: Comprehensive Plan Update; Kelley Klepper. The City of Port Orange is named as an Additional Insured with respects to General & Automobile Liability where required by written contract. Waiver of Subrogation applies to Workers Compensation where required by written contract & allowed by law.

CERTIFICATE HOLDER

City of Port Orange
1000 City Center Circle
Port Orange FL 32129-0000

CANCELLATION

SHOULD ANY OF THE ABOVE DESCRIBED POLICIES BE CANCELLED BEFORE THE EXPIRATION DATE THEREOF, NOTICE WILL BE DELIVERED IN ACCORDANCE WITH THE POLICY PROVISIONS.

AUTHORIZED REPRESENTATIVE

Gregg Bachtel

© 1988-2015 ACORD CORPORATION. All rights reserved.

HUMAN TRAFFICKING AFFIDAVIT
(SECTION 787.06, FLORIDA STATUTES)

STATE OF FLORIDA §
§
COUNTY OF VOLUSIA §

The undersigned ("Affiant"), on behalf of the entity listed below ("Entity"), after being duly sworn, hereby attests as follows:

1. My name is Hao Chau. I am over the age of Twenty-one years old. I am the Vice President (Title) of Kimley-Horn and Associates, Inc. (Business Name) a non-governmental entity which does business in the State of Florida, hereinafter called the "Entity."

2. I have personal knowledge of each and every statement of fact contained herein, and each and every statement of fact is true and correct.

3. Entity does not use coercion, as defined in Section 787.06, Florida Statutes, for labor or services.

4. The undersigned is an officer or representative of the entity and is authorized to execute this affidavit on behalf of the Entity.

5. Under penalties of perjury, I declare that I have read the foregoing Human Trafficking Affidavit and that the facts stated herein are true.

Further Affiant sayeth not.

Date: August 29, 2024

Signed: [signature]
Print Name: Hao Chau
Title: Vice President

SUBSCRIBED AND SWORN before me by means of [XX] physical presence or [__] online notarization on the 29th day of August, 2024 by Hao Chau as Vice President on behalf of Kimley-Horn and Associates, Inc. who is personally known to me or who has produced ave corp. as identification.

(Notary Seal)
Notary Public State of Florida
Kelly Burdett
My Commission HH 537969
Expires 6/12/2028

Kelly Burdett HH 537969
Notary Public, State of Florida 6/12/2028
Printed name, commission and expiration of commission term

SKB.7.8.2024
CA7985

CITY COUNCIL AGENDA ITEM

COUNCIL MEETING DATE 3/18/2025

SUBJECT: (D6e) Approval of Task Authorization No. 4 with Danus Utilities, Inc. for Sanitary Sewer Manhole Rehabilitation under the Standard Contract for Services pursuant to ITB #23-07

DEPARTMENT: Engineering

GOAL: 2 - Infrastructure

RECOMMENDED MOTION: Move to approve Task Authorization No 4 with Danus Utilities, Inc. for Sanitary Sewer Manhole Rehabilitation Services under the Standard Contract for Services pursuant to ITB #23-07, in the amount not to exceed $135,771, and authorize the Mayor and City Clerk to execute all contract required documents.

SUMMARY: The Engineering Department requests approval of Task Authorization No 4 – Sanitary Sewer Manhole Rehabilitation within Harbor Point for an amount not to exceed $135,771.

There are 6,180 sanitary manholes and approximately 270 miles of sanitary collection piping and 119 lift stations located in the Port Orange sanitary sewer collection system.

Inflow and Infiltration (I&I) is a term used to describe ways that groundwater and stormwater enter a sanitary sewer system. Inflow occurs when stormwater enters through a direct connection with the sewer system. Often it is due to a failure in the connection between the city system and the customer's piping. Infiltration in sewer pipes is when groundwater seeps into the pipes through cracks and leaks. Inflow & infiltration lead to higher operating and maintenance costs. In addition, the city is regulated by FDEP through the Waste Water Treatment Plant operating permit to actively address I & I in the city's sanitary sewer collection system. The city has been systematically addressing I & I for the past 6 years by inspecting and repairing or lining the different components of the system.

On July 18, 2023, Council approved the Standard Contract for Services with Danus Utilities, Inc. as it relates to ITB #23-07 Sanitary Sewer Manhole Linings.

Task Authorization No. 4 is for an amount not to exceed $135,771. The contract term is to be 365 days from the Notice to Proceed to allow for sufficient time for project completion. This item is funded under Project PU005 (URH001) Sewer System Rehabilitation.

PRESENTER: Junos Reed

ATTACHMENTS:

1.	Danus Utilities Inc. Task Authorization No 4 Sanitary Manhole Lining for PS 29 Harbor Point	Danus Utilities Inc. Task Authorization No 4 Sanitary Manhole Lining for PS 29 Harbor Point.pdf
2.	Danus Quote - RAV020524.1A PS 29	Danus Quote - RAV020524.1A PS 29.pdf
3.	Harbor Pt and Riverside Dr	Harbor Pt and Riverside Dr.pdf
4.	ACORD Form 20240627-093647-46	ACORD Form 20240627-093647-46.pdf
5.	Danus Utilities - Sanitary SW Rehab ITB 23-7 CA8193	Danus Utilities - Sanitary SW Rehab ITB 23-7 CA8193.pdf
6.	Danus Utl - Affidavit for Human Trafficing 9.5.2024	Danus Utl - Affidavit for Human Trafficing 9.5.2024.pdf

Julia Wiggins	Created/Initiated - 2/6/2025
Richard Colby	Approved - 2/6/2025
Junos Reed	Approved - 2/27/2025
Linda Truitt	Approved - 2/27/2025
Matthew Jones	Approved - 2/28/2025
Wayne Clark	Final Approval - 3/7/2025

TASK AUTHORIZATION NO. 4
Standard Contract for Services dated July 18, 2023
Between the City of Port Orange, Florida and Danus Utilities, Inc.

THIS Task Authorization ("Task Authorization") is entered into by and between the **CITY OF PORT ORANGE, FLORIDA**, a chartered municipal corporation with its principal place of business at 1000 City Center Circle, Port Orange, Florida 32129 (the "City") and **DANUS UTILITIES, INC.** (the "Contractor"), a Florida corporation with its principal place of business at 2320 Beardall Avenue, Sanford, Florida 32771, and hereinafter collectively referred to as the "Parties," and is to that certain Standard Contract for Services dated July 18, 2023, and any amendments thereto, hereinafter collectively referred to as the "Contract." The Parties, in exchange for the mutual covenants contained herein and in the Contract, agree as follows:

1. This Task Authorization expressly modifies the Contract and in the event of a conflict, the terms and conditions of this Task Authorization shall prevail.

2. The City Engineer, Junos Reed, shall perform contract administration for this Task **Authorization No 4** and can be reached at (386) 506-5751.

3. In addition to all other terms and conditions contained in the Contract, Contractor shall provide services relating to Sanitary Manhole Lining for PS 29 Harbor Point, and as further described in Contractor's quote **No RAV020525-1A** and scope of services dated **February 5, 2025**, attached hereto as Exhibit "1" and made a part hereof.

4. This Task Authorization shall become effective on the last date the Task Authorization is signed by the Parties. Work shall be completed within **365 days** from issuance of a written Notice to Proceed executed by the City.

5. In return for the services identified above, the City agrees to compensate Contractor in an amount not to exceed **$135,771.00**. All payments shall be governed by the Local Government Prompt Payment Act as set forth in Sections 218.70 through 218.79, Florida Statutes, as amended.

6. Contractor shall provide a 100% Combination Payment and Performance Bond in accordance with Florida Statutes Section 255.05, including the Front Page and Certificate for Filing in Public Records, in a form substantially similar to the forms attached hereto as **Task Authorization Exhibit "1,"** and acceptable to the Port Orange City Attorney, and recorded with the Clerk of Volusia County at Contractor's expense. A separate bond shall be provided from the Surety which identifies and covers the scope of work for the project stated in this Task Authorization along with all other provisions of this Task Authorization with the penal sum of such bond being not less that the contract sum described in this Task Authorization. If any surety bond furnished in connection with this Task Authorization becomes unacceptable to the City, Contractor shall promptly furnish such additional security as may be required from time to time to protect the interests of the City and a person supplying labor and materials in the prosecution of work contemplated by this **Task Authorization No. 4**.

7. This Task Authorization may be executed in one or more counterparts, each of which shall be deemed to be an original but all of which together shall constitute one and the same instrument. The delivery by facsimile or e-mail of an executed copy of this Task Authorization shall be deemed valid as if an original signature was delivered. No contract shall be formed between the Contractor and the City until the City signs this Task Authorization.

IN WITNESS WHEREOF, the Parties have made and executed this Task Authorization for the purposes herein expressed on the dates set forth below.

Witnesses:

DANUS UTILITIES, INC.

_____ By:_____

Printed Name:_____ Dan Pardus, President

If this Contract is signed by an individual not identified as the President of the corporation in the records of the Florida Department of State, Division of Corporations, please provide written authorization for that individual to enter into contracts on behalf of the corporation.

_____ Date:_____

Printed Name:_____

At this time the City <u>does not</u> accept electronic/digital signatures. A wet signature is required for this document.

CITY OF PORT ORANGE

By:_____
Scott Stiltner, Mayor

Date:_____

ATTEST:

By:_____
Robin L. Fenwick, MMC, City Clerk

Date:_____

[CA 8193]

EXHIBIT "1"

Contractor's Quote

Consisting of 7 Pages

DANUS UTILITIES

RAVEN LINING SYSTEMS

PROPOSAL

Remit To:
Danus Utilities, Inc.
P.O. Box 291671
Port Orange, FL 32129

Phone: 386-566-8805
danusutilities.com
andy@danusutilities.com
Fax: 407-878-1254

PROPOSAL NO: RAV020525-1A
PROPOSAL DATE: February 5, 2025

CUSTOMER: City of Port Orange
ADDRESS: 1000 City Center
Port Orange, Florida 32771

PHONE:
CONTACT: Dick Colby
EMAIL: rcolby@Port-Orange.org

Reference: City of Port Orange Standard Contract for Services / ITB #23-7 Sanitary Sewer Manhole Lining CA8193

Job Description: P.S. # 29 Harbor Point

Item	Description	SF / Ea. / LF	Unit Price	Extended Price
A	**General**			
1	Mobilization	4	$1,000.00	$4,000.00
2	FDOT Maintenance of Traffic (Index 102-602)	10	$450.00	$4,500.00
B	**Construction**			
1	Lining of Manholes/Wet Wells using Raven 405 Epoxy Lining System	2263	$37.00	$83,731.00
2	Cementious Build Back of Existing Manhole/ Wet Well Structure with Minimal Deterioration Up to 2" thick	2263	$5.00	$11,315.00
4	Chemial Grout to Stop Ground Water Infiltration per Tube of AV202 Multigrout	27	$125.00	$3,375.00
8	Replacement of Manhole Ring & Cover in Grass (using Cast Iron R&C)	2	$1,350.00	$2,700.00
10	Replacement of Manhole Ring & Cover in Pavement (using Cast Iron R&C)	14	$1,750.00	$24,500.00
	Payment and Proformance Bond	1	$1,650.00	$1,650.00

Notes: Ring and Cover Sanitary USF 170 E

Sub total	$135,771.00
Tax	
Total	**$135,771.00**

~~**Terms Net 30 Days**~~ All material is guaranteed to be as specified. All work to be completed in a workmanlike manner according to standard practices. Any alteration or deviation from above specifications involving extra cost will be executed only upon written orders and will become an extra charge over and above the estimate. All agreements contingent upon strikes, accidents or delays beyond our control. This ~~proposal is subject to acceptance within 30 days and is void thereafter at the option of the undersigned.~~

Proposal Accepted By: See Page 3 of Task Authorization No 4 Date: _____

SIGNATURE

ArcGIS Web Map

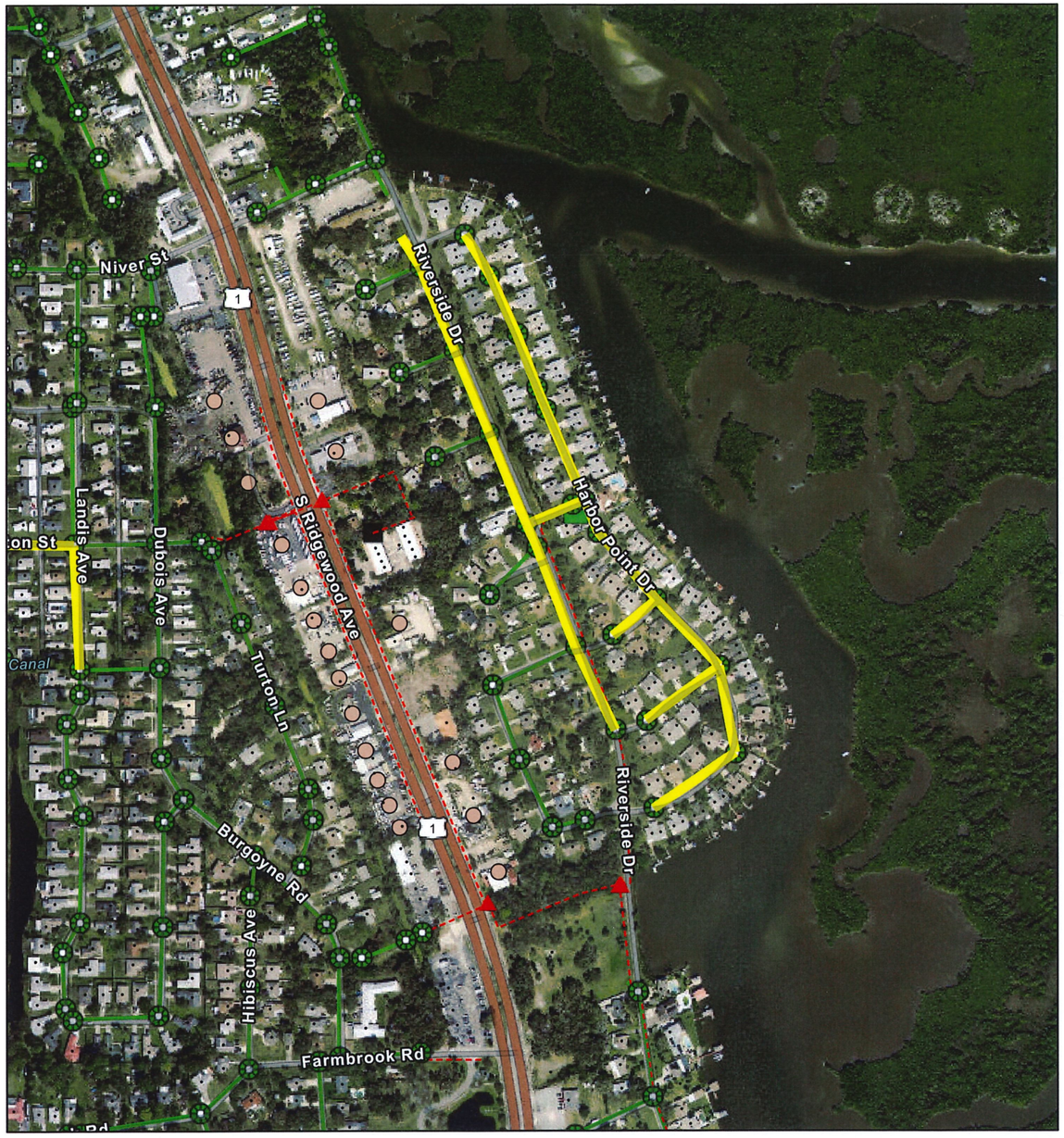

6/13/2024, 9:22:44 AM

1:6,385

0 0.05 0.1 0.19 mi

0 0.07 0.15 0.3 km

State of Florida, Maxar, Esri Community Maps Contributors, FDEP, © OpenStreetMap, Microsoft, Esri, TomTom, Garmin, SafeGraph, GeoTechnologies, Inc, METI/NASA, USGS, EPA, NPS, US Census Bureau, USDA, USFWS

FILE COPY

CITY OF PORT ORANGE

VOLUSIA COUNTY, FLORIDA

"CLAY PIPE MAPPING"

2004

August AS

REVISED 2010

Page 2 updated

~~8/1/10~~
~~9/10/10~~
3/2/11
1/3/14

VCP
PVC
lined VCP
lined PVC

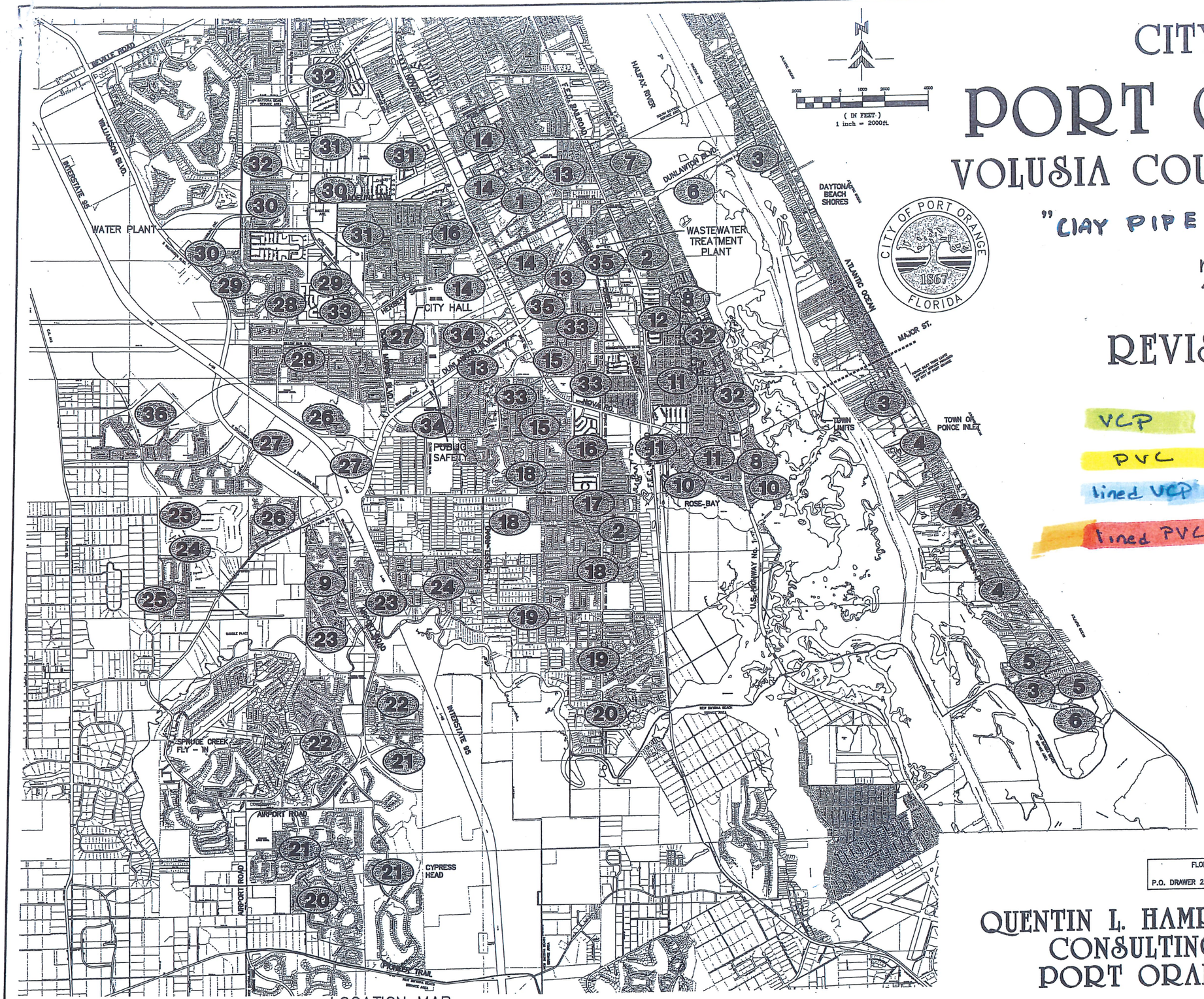

LOCATION MAP

RICHARD W. FERNANDEZ, P.E. 14722
MARK A. HAMPTON, P.E. 27391
BRADLEY T. BLAIS, P.E. 47130
DAVID A. KING, P.E. 50609
ANDREW M. GIANNINI, P.E. 46601

FLORIDA CERTIFICATE OF AUTHORIZATION NUMBER: 626
FAX 386 761- 3977
P.O. DRAWER 290247 PORT ORANGE, FLORIDA 32129-0247 386 761-6810

QUENTIN L. HAMPTON ASSOCIATES
CONSULTING ENGINEERS
PORT ORANGE, FLORIDA

S:\PO\general\Cad\Manhole Mapping 2004\cover.dwg, 12/23/2008 3:35:05 PM, TS

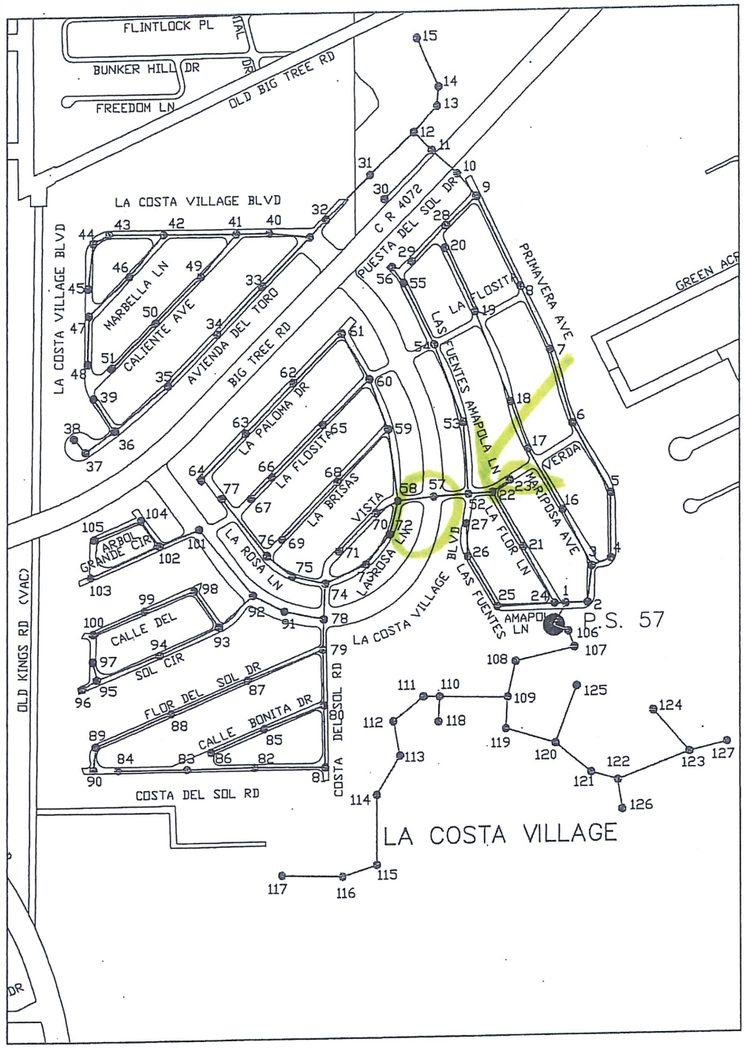

LaCOSTA VILLAGE
P.S. #57 SYSTEM
TOTAL LENGTH 28,520'
127 MANHOLES

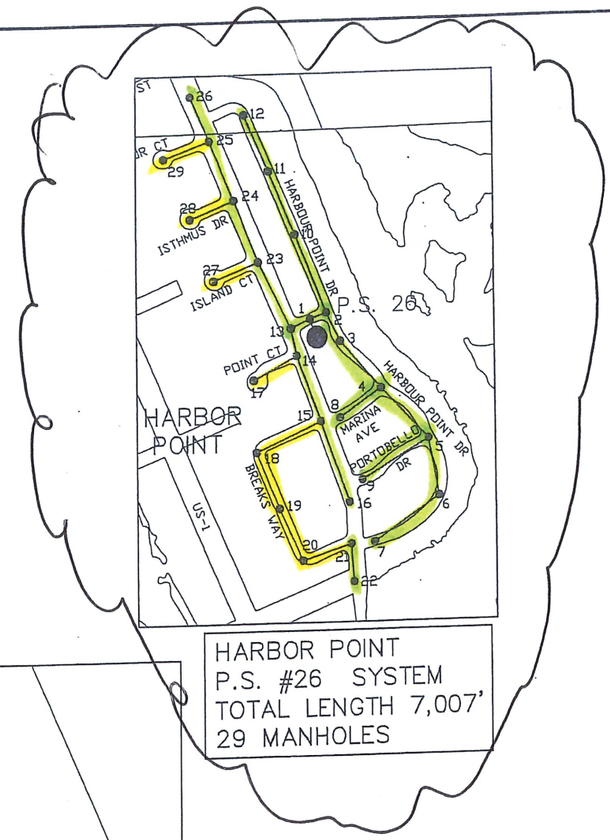

HARBOR POINT
P.S. #26 SYSTEM
TOTAL LENGTH 7,007'
29 MANHOLES

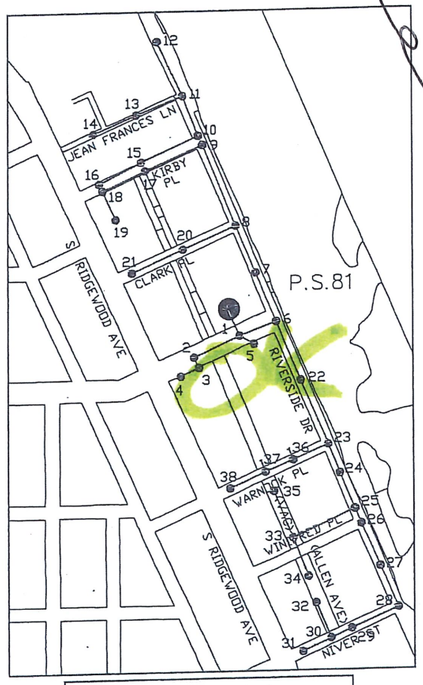

COMMONWEALTH
P.S. #81 SYSTEM
TOTAL LENGTH 7,283'
38 MANHOLES

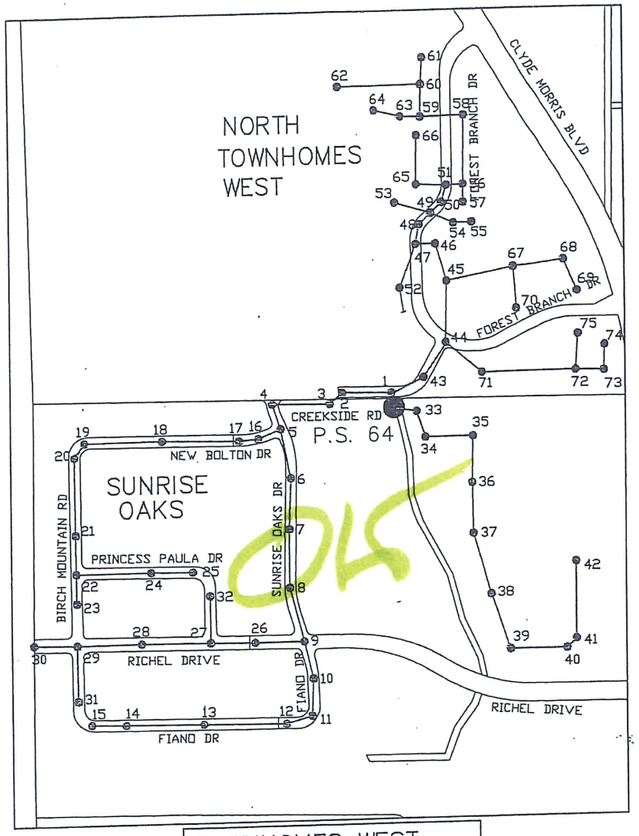

TOWNHOMES WEST
P.S. #64 SYSTEM
TOTAL LENGTH 14,222'
75 MANHOLES

SCALE: 1" = 300'

NO	BY	REVISIONS	DATE
1	TS	REVISED	11/08

QUENTIN L. HAMPTON ASSOCIATES, INC.
CONSULTING ENGINEERS
FLORIDA CERTIFICATE OF AUTHORIZATION NUMBER: 626
FAX 386 761-3977
P.O. DRAWER 290247 PORT ORANGE, FLORIDA 32129-0247 386 761-8810

CITY OF
PORT ORANGE
VOLUSIA COUNTY, FLORIDA

MANHOLE MAPPING
2004

LaCOSTA VILLAGE/COMMONWEALTH
HARBOR POINT/TOWNHOMES WEST
PUMP STATIONS
#64 #57 #81 #26

RICHARD W. FERNANDEZ, P.E. 14722
MARK A. HAMPTON, P.E. 27391
BRADLEY T. BLAIS, P.E. 47130
DAVID A. KING, P.E. 50609
ANDREW M. GIANNINI, P.E. 46601

DESIGNED	—	DATE	—
DRAWN	—	DATE	—
CHECKED	—	DATE	—
APPROVED	—	DATE	—

SCALE AS SHOWN
JOB NO.

SHEET NO. 32 OF 37

S:\PO\general\Cad\Manhole Mapping 2004\PS_64_57_81_26.dwg, 12/4/2008 4:07:23 PM, TS

FRONT PAGE FOR BOND REQUIRED BY SECTION 255.05, F.S.

PAYMENT AND PERFORMANCE BOND

(Public Works)

Notice and Time Limitations Must Be In Accordance
With Section 255.05(2), (8) and (10), Florida Statutes

BOND NO. _____

PRINCIPAL:

Developer or Contractor:	Danus Utilities, Inc.
Principal Business Address:	2320 Beardall Avenue Sanford, Florida 32771
Contact Person:	Dan J. Pardus, President
Phone Number:	(386) 233-5588

SURETY: _____
Address: _____
_____
Contact Person: _____
Phone Number: _____

OWNER: City of Port Orange, Florida, a chartered municipal corporation
1000 City Center Circle
Port Orange, Florida 32129-4144
Contact Person: City Manager
Phone Number: (386) 506-5501

Amount: **$135,771.00** **City Project Number: ITB 23-07 Sanitary Sewer Manhole Lining**

Description of Work: Sanitary Sewer Manhole Lining for areas Harbor Point as provided in Exhibit No. 1

Project Location: Various portions for areas in Harbor Point, Port Orange, Volusia County, Florida

Legal Description: Various portions for areas Harbor Point, Port Orange, Volusia County, Florida

Front Page

All other pages are subsequent to this page regardless of any numbers that may be printed thereon.

Danus Utilities, Inc.

ITB 23-07 Sanitary Sewer Manhole Lining Task Authorization No. 4 - Harbor Point

Bond No._____

COMBINATION PAYMENT AND PERFORMANCE BOND
FOR
PUBLIC CONSTRUCTION

per Section 255.05, Florida Statutes
Guaranty for Construction of Public Improvements

BY THIS BOND, We, **Danus Utilities, Inc.,** as Principal, and **DANUS UTILITIES, INC.**, a corporation, as Surety, are bound to **CITY OF PORT ORANGE, FLORIDA**, a Florida municipal corporation, herein called "Owner" or sometimes referred to as "City," in the sum of **ONE HUNDRED THIRTY-FIVE THOUSAND SEVEN HUNDRED SEVENTY-ONE AND 00/100 DOLLARS ($135,771.00)**, for payment of which we bind ourselves, our heirs, personal representatives, successors, and assigns, jointly and severally.

THE CONDITION OF THIS BOND is that if Principal:

1. Performs the terms of that certain Task Authorization No. 4 having an effective date of _____, in accordance with Standard Contract for Services, having an effective date of July 18, 2023, entered into by and between the Principal and the City, for Sanitary Sewer Manhole Lining, hereinafter referred to as the "Contract," being made a part of this bond by reference, at the times and in the manner prescribed in the Contract; and

2. Promptly makes payments to all claimants, as defined in Section 255.05(1), Florida Statutes, supplying Principal with labor, materials, or supplies, used directly or indirectly by Principal in the prosecution of the work provided for in the Contract (the "Work"); and

3. Pays Owner all losses, damages, delay damages (including contractually authorized liquidated damages), expenses, costs, and attorney's fees, including appellate proceedings, that Owner sustains because of a breach or material breach by Principal under the Contract documents; and

4. Performs the guarantee of all work and materials furnished under the Contract for the time specified in the Contract, then this bond is void; otherwise it remains in full force.

Notice of Nonpayment and Time Limitations

Any action instituted by a claimant under this bond for payment must be in accordance with the notice and time limitation provisions in Sections 255.02(2), (8) and (10), Florida Statutes.

Any changes in or under the contract documents and compliance or noncompliance with any formalities connected with the contract or the changes does not affect Surety's obligation under this bond.

IN WITNESS WHEREOF, this performance and payment bond is executed and shall be deemed an original, this _____, day of _____, 2025.

Attest:

DANUS UTILITIES, INC.
(Principal)

_____
(As to Corporate Principal) Secretary

By:_____
Dan J. Pardus, President

_____
(Witness to Principal)

(Corporate Seal)

_____
(Surety)

_____
(Witness to Surety)

By:_____
Name:_____
(Attorney-in-Fact)

(Corporate Seal)

NOTE: ***Date of BOND must not be prior to date of Contract.*** *If Developer/Principal is Partnership, all partners should execute BOND. All BONDS signed by an agent must be accompanied by a certified copy of the authority to act.*

IMPORTANT: Surety companies executing BONDS must appear on the Treasury Department's most current list (Circular 570 as amended) and be authorized to transact business in the State of Florida.

DANUS UTILITIES

RAVEN LINING SYSTEMS

PROPOSAL

Remit To:
Danus Utilities, Inc.
P.O. Box 291671
Port Orange, FL 32129

Phone: 386-566-8805
danusutilities.com
andy@danusutilities.com
Fax: 407-878-1254

PROPOSAL NO: RAV020525-1A
PROPOSAL DATE: February 5, 2025

CUSTOMER: City of Port Orange
ADDRESS: 1000 City Center
Port Orange, Florida 32771

PHONE:
CONTACT: Dick Colby
EMAIL: rcolby@Port-Orange.org

Reference: City of Port Orange Standard Contract for Services / ITB #23-7 Sanitary Sewer Manhole Lining CA8193

Job Description: P.S. # 29 Harbor Point

Item	Description	SF / Ea. / LF	Unit Price	Extended Price
A	**General**			
1	Mobilization	4	$1,000.00	$4,000.00
2	FDOT Maintenance of Traffic (Index 102-602)	10	$450.00	$4,500.00
B	**Construction**			
1	Lining of Manholes/Wet Wells using Raven 405 Epoxy Lining System	2263	$37.00	$83,731.00
2	Cementious Build Back of Existing Manhole/ Wet Well Structure with Minimal Deterioration Up to 2" thick	2263	$5.00	$11,315.00
4	Chemial Grout to Stop Ground Water Infiltration per Tube of AV202 Multigrout	27	$125.00	$3,375.00
8	Replacement of Manhole Ring & Cover in Grass (using Cast Iron R&C)	2	$1,350.00	$2,700.00
10	Replacement of Manhole Ring & Cover in Pavement (using Cast Iron R&C)	14	$1,750.00	$24,500.00
	Payment and Proformance Bond	1	$1,650.00	$1,650.00

Notes: Ring and Cover Sanitary USF 170 E

Sub total	$135,771.00
Tax	
Total	**$135,771.00**

Terms Net 30 Days All material is guaranteed to be as specified. All work to be completed in a workmanlike manner according to standard practices. Any alteration or deviation from above specifications involving extra cost will be executed only upon written orders and will become an extra charge over and above the estimate. All agreements contingent upon strikes, accidents or delays beyond our control. This proposal is subject to acceptance within 30 days and is void thereafter at the option of the undersigned.

Proposal Accepted By:_____Date:_____

SIGNATURE

ArcGIS Web Map

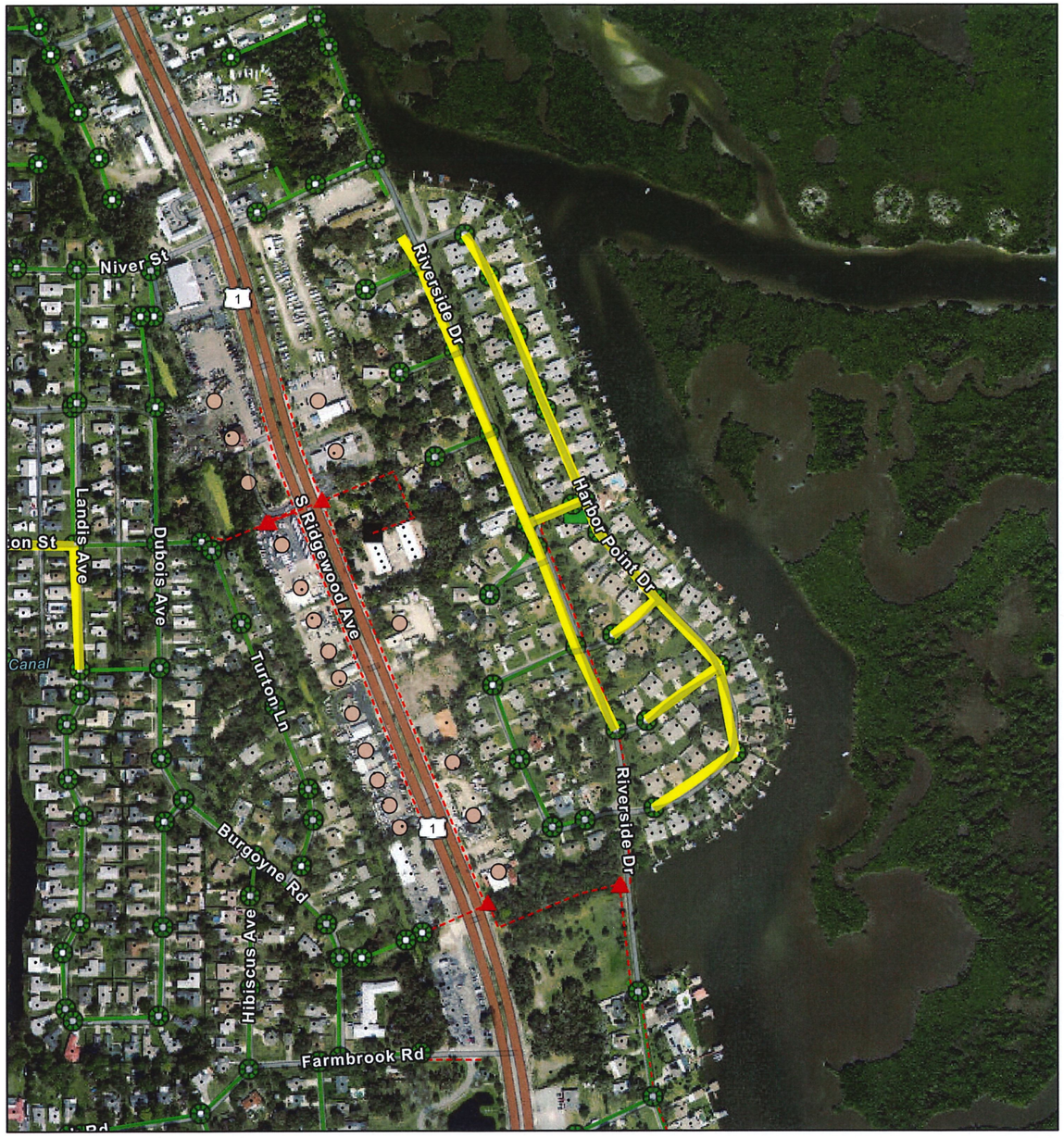

6/13/2024, 9:22:44 AM

1:6,385

0 0.05 0.1 0.19 mi

0 0.07 0.15 0.3 km

State of Florida, Maxar, Esri Community Maps Contributors, FDEP, © OpenStreetMap, Microsoft, Esri, TomTom, Garmin, SafeGraph, GeoTechnologies, Inc, METI/NASA, USGS, EPA, NPS, US Census Bureau, USDA, USFWS

FILE COPY

CITY OF PORT ORANGE

VOLUSIA COUNTY, FLORIDA

"CLAY PIPE MAPPING"

2004

August AS

REVISED 2010

Page 2 updated

~~8/1/10~~
~~9/10/10~~
3/2/11
1/3/14

VCP
PVC
lined VCP
lined PVC

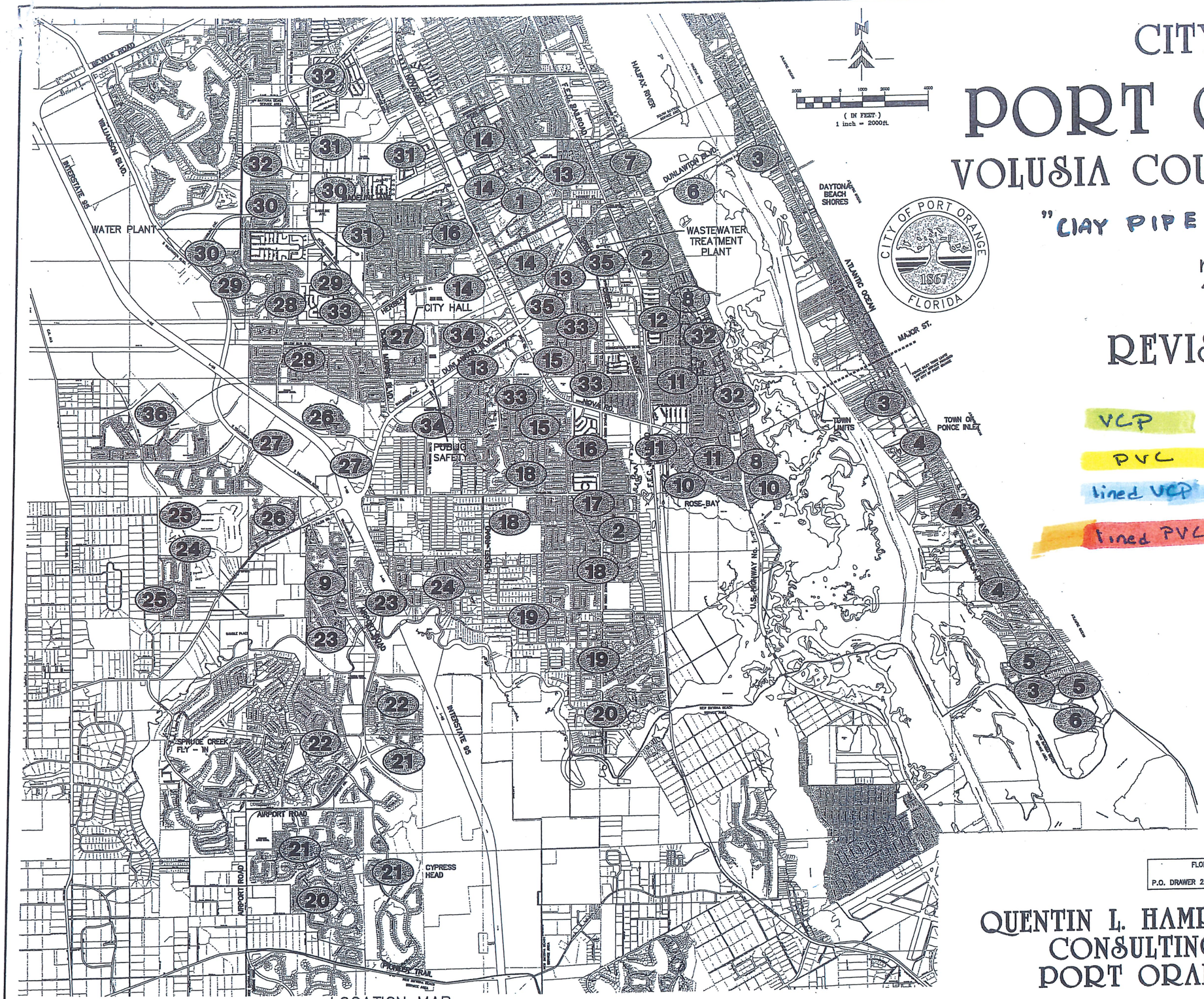

LOCATION MAP

RICHARD W. FERNANDEZ, P.E. 14722
MARK A. HAMPTON, P.E. 27391
BRADLEY T. BLAIS, P.E. 47130
DAVID A. KING, P.E. 50609
ANDREW M. GIANNINI, P.E. 46601

FLORIDA CERTIFICATE OF AUTHORIZATION NUMBER: 626
FAX 386 761- 3977
P.O. DRAWER 290247 PORT ORANGE, FLORIDA 32129-0247 386 761-6810

QUENTIN L. HAMPTON ASSOCIATES
CONSULTING ENGINEERS
PORT ORANGE, FLORIDA

S:\PO\general\Cad\Manhole Mapping 2004\cover.dwg, 12/23/2008 3:35:05 PM, TS

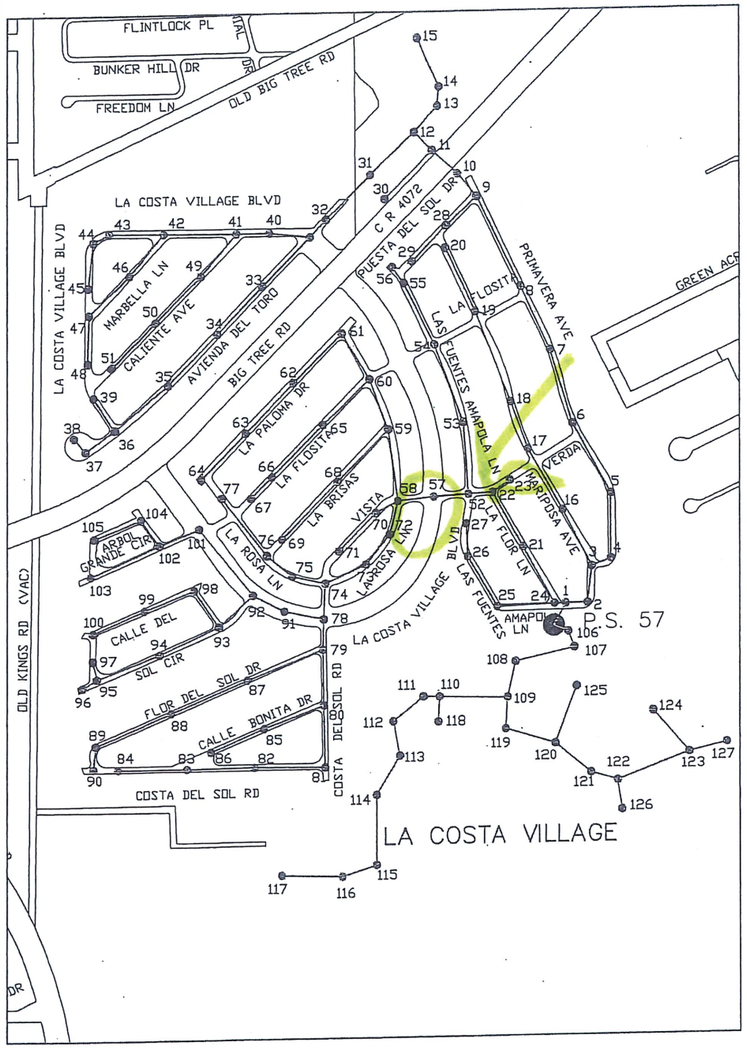

LaCOSTA VILLAGE
P.S. #57 SYSTEM
TOTAL LENGTH 28,520'
127 MANHOLES

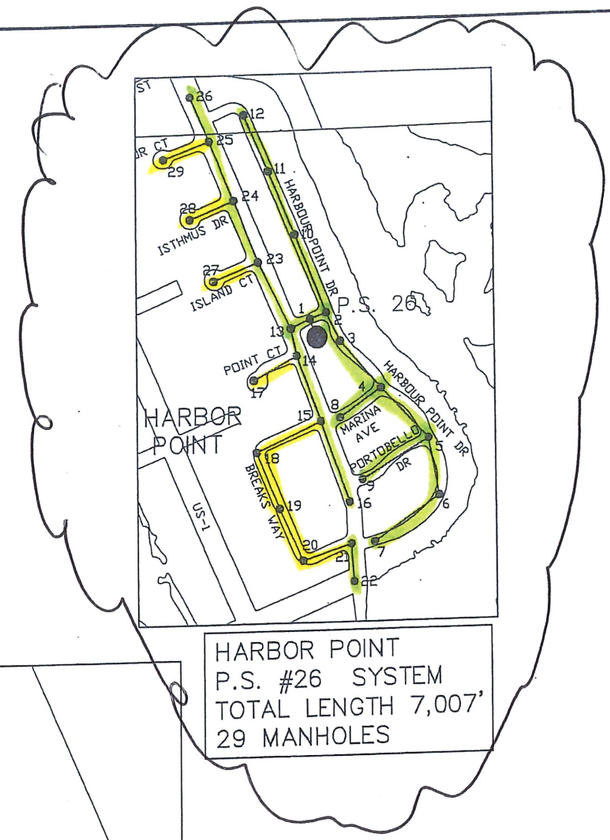

HARBOR POINT
P.S. #26 SYSTEM
TOTAL LENGTH 7,007'
29 MANHOLES

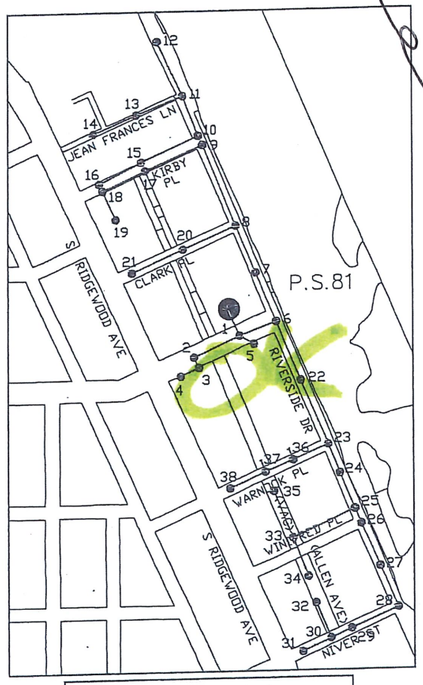

COMMONWEALTH
P.S. #81 SYSTEM
TOTAL LENGTH 7,283'
38 MANHOLES

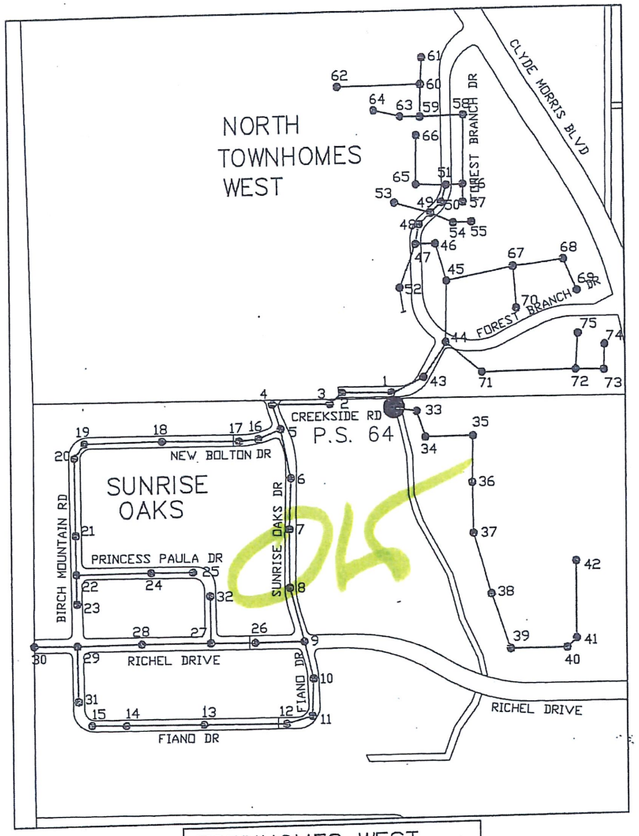

TOWNHOMES WEST
P.S. #64 SYSTEM
TOTAL LENGTH 14,222'
75 MANHOLES

SCALE: 1" = 300'

NO	BY	REVISIONS	DATE
1	TS	REVISED	11/08

QUENTIN L. HAMPTON ASSOCIATES, INC.
CONSULTING ENGINEERS
FLORIDA CERTIFICATE OF AUTHORIZATION NUMBER: 626
FAX 386 761-3977
P.O. DRAWER 290247 PORT ORANGE, FLORIDA 32129-0247 386 761-8810

CITY OF
PORT ORANGE
VOLUSIA COUNTY, FLORIDA

MANHOLE MAPPING
2004

LaCOSTA VILLAGE/COMMONWEALTH
HARBOR POINT/TOWNHOMES WEST
PUMP STATIONS
#64 #57 #81 #26

RICHARD W. FERNANDEZ, P.E. 14722
MARK A. HAMPTON, P.E. 27391
BRADLEY T. BLAIS, P.E. 47130
DAVID A. KING, P.E. 50609
ANDREW M. GIANNINI, P.E. 46601

DESIGNED	—	DATE	—
DRAWN	—	DATE	—
CHECKED	—	DATE	—
APPROVED	—	DATE	—

SCALE AS SHOWN
JOB NO.

SHEET NO. 32 OF 37

S:\PO\general\Cad\Manhole Mapping 2004\PS_64_57_81_26.dwg, 12/4/2008 4:07:23 PM, TS

CERTIFICATE OF LIABILITY INSURANCE

DATE (MM/DD/YYYY): 06/20/2024

THIS CERTIFICATE IS ISSUED AS A MATTER OF INFORMATION ONLY AND CONFERS NO RIGHTS UPON THE CERTIFICATE HOLDER. THIS CERTIFICATE DOES NOT AFFIRMATIVELY OR NEGATIVELY AMEND, EXTEND OR ALTER THE COVERAGE AFFORDED BY THE POLICIES BELOW. THIS CERTIFICATE OF INSURANCE DOES NOT CONSTITUTE A CONTRACT BETWEEN THE ISSUING INSURER(S), AUTHORIZED REPRESENTATIVE OR PRODUCER, AND THE CERTIFICATE HOLDER.

IMPORTANT: If the certificate holder is an ADDITIONAL INSURED, the policy(ies) must have ADDITIONAL INSURED provisions or be endorsed. If SUBROGATION IS WAIVED, subject to the terms and conditions of the policy, certain policies may require an endorsement. A statement on this certificate does not confer rights to the certificate holder in lieu of such endorsement(s).

PRODUCER		CONTACT NAME:	Melissa Adrian, CPSR	
Caton-Hosey Insurance		PHONE (A/C, No, Ext):	(386) 767-3161	FAX (A/C, No): (386) 760-1770
3731 Nova Rd.		E-MAIL ADDRESS:	melissa@catonhosey.com	
		INSURER(S) AFFORDING COVERAGE		NAIC #
Port Orange	FL 32129	INSURER A :	Specialty Builders Ins. Co.	16826
INSURED		INSURER B :	Auto-Owners Ins	18988
Danus Utilities, Inc		INSURER C :	Travelers Excess & Surplus Lines Co	29696
4133 Saddle Club Dr		INSURER D :	National Builders Insurance Company	16632
		INSURER E :	Federal Insurance Company	20281
New Smyrna Beach	FL 32168	INSURER F :	Westchester Surplus Lines	10172

COVERAGES **CERTIFICATE NUMBER:** CL2462032848 **REVISION NUMBER:**

THIS IS TO CERTIFY THAT THE POLICIES OF INSURANCE LISTED BELOW HAVE BEEN ISSUED TO THE INSURED NAMED ABOVE FOR THE POLICY PERIOD INDICATED. NOTWITHSTANDING ANY REQUIREMENT, TERM OR CONDITION OF ANY CONTRACT OR OTHER DOCUMENT WITH RESPECT TO WHICH THIS CERTIFICATE MAY BE ISSUED OR MAY PERTAIN, THE INSURANCE AFFORDED BY THE POLICIES DESCRIBED HEREIN IS SUBJECT TO ALL THE TERMS, EXCLUSIONS AND CONDITIONS OF SUCH POLICIES. LIMITS SHOWN MAY HAVE BEEN REDUCED BY PAID CLAIMS.

INSR LTR	TYPE OF INSURANCE	ADDL INSD	SUBR WVD	POLICY NUMBER	POLICY EFF (MM/DD/YYYY)	POLICY EXP (MM/DD/YYYY)	LIMITS	
A	[X] COMMERCIAL GENERAL LIABILITY [ ] CLAIMS-MADE [X] OCCUR [X] Contractual Liability [X] XCU Included GEN'L AGGREGATE LIMIT APPLIES PER: [ ] POLICY [X] PRO-JECT [ ] LOC [ ] OTHER:	Y		PKG-0351006-01	07/02/2024	07/02/2025	EACH OCCURRENCE DAMAGE TO RENTED PREMISES (Ea occurrence) MED EXP (Any one person) PERSONAL & ADV INJURY GENERAL AGGREGATE PRODUCTS - COMP/OP AGG 	$ 1,000,000 $ 100,000 $ 5,000 $ 1,000,000 $ 2,000,000 $ 2,000,000 $
B	AUTOMOBILE LIABILITY [X] ANY AUTO [ ] OWNED AUTOS ONLY [ ] SCHEDULED AUTOS [ ] HIRED AUTOS ONLY [ ] NON-OWNED AUTOS ONLY	Y		4806741403	07/02/2024	07/02/2025	COMBINED SINGLE LIMIT (Ea accident) BODILY INJURY (Per person) BODILY INJURY (Per accident) PROPERTY DAMAGE (Per accident) PIP-Basic	$ 1,000,000 $ $ $ $ 10,000
C	[X] UMBRELLA LIAB [X] OCCUR [ ] EXCESS LIAB [ ] CLAIMS-MADE [ ] DED [X] RETENTION $ 10,000			CUP-8W978480-24-NF	07/02/2024	07/02/2025	EACH OCCURRENCE AGGREGATE 	$ 1,000,000 $ 1,000,000 $
D	WORKERS COMPENSATION AND EMPLOYERS' LIABILITY ANY PROPRIETOR/PARTNER/EXECUTIVE OFFICER/MEMBER EXCLUDED? (Mandatory in NH) Y / N: N If yes, describe under DESCRIPTION OF OPERATIONS below	N / A	Y	WCV 0264441 08	07/02/2024	07/02/2025	[X] PER STATUTE [ ] OTH-ER E.L. EACH ACCIDENT E.L. DISEASE - EA EMPLOYEE E.L. DISEASE - POLICY LIMIT	 $ 1,000,000 $ 1,000,000 $ 1,000,000
E	Rented & Leased Equipment			45471710	06/24/2024	06/24/2025	Limit Deductible	$350,000 $1,000

DESCRIPTION OF OPERATIONS / LOCATIONS / VEHICLES (ACORD 101, Additional Remarks Schedule, may be attached if more space is required)

City of Port Orange is included as an Additional Insured for General Liability and Automobile Liability with respects to operations of the Named Insured and as required by written contract. Coverage is primary and non-contributory. Waiver of Subrogation applies with respect to Workers Compensation as required by written contract.

CERTIFICATE HOLDER

City of Port Orange
1000 City Center Circle
Port Orange FL 32129

CANCELLATION

SHOULD ANY OF THE ABOVE DESCRIBED POLICIES BE CANCELLED BEFORE THE EXPIRATION DATE THEREOF, NOTICE WILL BE DELIVERED IN ACCORDANCE WITH THE POLICY PROVISIONS.

AUTHORIZED REPRESENTATIVE

© 1988-2015 ACORD CORPORATION. All rights reserved.

CITY OF PORT ORANGE
STANDARD CONTRACT FOR SERVICES

This Standard Contract for Services ("Contract") is entered into this 18 day of July, **2023**, by and between the **CITY OF PORT ORANGE**, a Florida municipal corporation, whose principal address is 1000 City Center Circle, Port Orange, Florida 32129 (the "City"), and **DANUS UTILITIES, INC.** ("Contractor"), **DANUS UTILITIES, INC.**, a Florida corporation whose principal address is 2320 Beardall Avenue, Sanford, Florida 32771. The City and Contractor are collectively referred to herein as the "Parties."

1. *Provision of Services*

(a) The Contractor hereby agrees to provide Sanitary Sewer Manhole Linings, and as more specifically described in Intent to Bid 23-07 ("ITB 23-07"). This Contract together with ITB 23-07, Addendum No. 1, Addendum No. 2, and Contractor's proposal, all of which may be referred to as the "Contract" and all of which are made a part hereof by reference shall constitute the formal written Contract between the City and Contractor. For convenience, Section 3 Scope of Work, Addendum No. 1 and Addendum No. 2 of ITB 23-07, and the Bid Tabulation as submitted by Contractor in Contractor's Proposal are attached hereto as Exhibit "1." A complete copy of ITB 23-07 is available in the Office of the City Clerk. Contractor represents that they are familiar with the documents that make up the Contract, as referenced hereinabove.

(b) The time, manner and place for performance of such services shall be:

Term: This Contract shall become effective on the last date the Contract is signed by the Parties ("Effective Date"). The Contract shall commence upon execution of the Contract by the Parties, and shall continue for a period of two (2) years (the "Term").

Renewals: This Contract may be renewed for three (3) one-year periods, upon written agreement of the Parties, City Manager approval, and budget appropriation.

Manner and Place: The work shall be in accordance with and in a manner as required by all current federal, state, county, fire, building and land development codes, laws, ordinances and regulations, and with applicable permits and licenses per the City Code of Ordinances.

Time and Essence: Contractor acknowledges that time is of the essence for this Contract.

Authorization for Services: This Contract standing alone does not authorize the purchase of any goods or services or require the City to place any orders for goods or service. Authorization for the performance of services by the Contractor under this Contract shall be in the form of written Task Authorization(s) ("Task Authorization") issued and executed by the City and signed by the Contractor. A sample Task Authorization is attached hereto as Exhibit "2." Task Authorization(s) may require a Payment and Performance Bond. Task Authorization(s) requiring a Payment and Performance Bond, shall include an Exhibit attaching the required Payment and Performance Bond. The City reserves the right to contract with other parties for the goods and services contemplated by this Contract, as determined in the City's sole and absolute discretion.

2. *City Obligations*. In return for the services identified above, the City agrees to compensate Contractor at the prices set forth in Exhibit "1" attached hereto, subject to a limit not to exceed budget appropriation for the then fiscal year. All payments shall be governed by the Local Government Prompt Payment Act as set forth in Sections 218.70 through 218.79, Florida Statutes, as amended.

3. *Contract Documents*. The following forms, attached as Exhibit "3" are an integral part of this Contract and must be completed, signed, witnessed and notarized as indicated and returned with the signed Contract:

(a) Front Page for Bond (F.S. § 255.05)
(b) Combination Payment and Performance Bond (F.S. § 255.05)

4. *Contract Administration*. The Engineering Director, Junos Reed, shall perform contract administration of this Contract. The City may change the contract administrator, from time to time and at any time, upon written notice to Contractor. For notice provisions, see the paragraph below entitled "Notice."

5. *Liens*. Contractor acknowledges that Contractor shall not be entitled to lien the City or other public property.

6. *Termination for Convenience of the City*

(a) The parties agree that the City may terminate this Contract, or any work or delivery required hereunder, from time to time either in whole or part, whenever the City Manager of Port Orange shall determine that such termination is in the best interest of the City.

(b) Termination, in whole or in part, shall be effected by delivery of a Notice of Termination signed by the City Manager or his designee, mailed or delivered to the Contractor, and specifically setting forth the effective date of termination.

(c) Upon receipt of such Notice, the Contractor shall:

(i) cease any further deliveries or work due under this Contract, on the date, and to the extent, which may be specified in the Notice;

(ii) place no further orders with any subcontractors except as may be necessary to perform that portion of this Contract not subject to the Notice;

(iii) terminate all subcontracts except those made with respect to contract performance not subject to the Notice;

(iv) settle all outstanding liabilities and claims which may arise out of such termination, with the ratification of the Finance Director of Port Orange; and

(v) use best efforts to mitigate any damages which may be sustained by the Contractor as a consequence of termination under this clause.

(d) After complying with the provisions of subparagraph (c), above, the Contractor shall submit a termination claim, in no event later than six (6) months after the effective date of termination, unless one or more extensions of three (3) months each are granted by the Finance Director.

(e) The Finance Director, with the approval of the City Manager, shall pay from the using department's budget, reasonable costs of termination, including a reasonable amount for profit on supplies or services delivered or work completed. In no event shall this amount be greater than the original contract price, reduced by any payments made prior to Notice of Termination, and further reduced by the price of the supplies not delivered or the services not provided. This Contract shall be amended accordingly, and the Contractor shall be paid the agreed amount.

(f) In the event that the parties cannot agree on the whole amount to be paid to the Contractor by reason of termination under this clause, the Finance Director shall pay the Contractor the amounts determined as follows, without duplicating any amounts which may have already been paid under the preceding paragraph of this clause:

(i) With respect to all Contract performance prior to the effective date of Notice of Termination, the total of:

(1) the cost of work performed or supplies delivered;

(2) the cost of settling and paying any reasonable claims as provided in paragraph (c) (iv), above;

(3) a sum as profit on (a) determined by the Finance Director to be fair and reasonable.

(ii) The total sum to be paid under (i) above shall not exceed the contract price, as further reduced by the contract price of work or supplies not terminated.

(g) In the event that the Contractor is not satisfied with any payments which the Finance Director shall determine to be due under this clause, the Contractor may appeal any claim to the City Council in accordance with Paragraph 23 of this contract concerning disputes.

7. *Termination for Convenience for Subcontractors*. In accordance with the termination for the convenience of the City provision of this contract, the Contractor shall include similar provisions in any subcontract, and shall specifically include a requirement that subcontractors make all reasonable efforts to mitigate damages which may be suffered. Failure to include such provisions shall bar the Contractor from any recovery from the City whatsoever of loss or damage sustained by a subcontractor as a consequence of termination for convenience.

8. *Termination for Default*. Either party may terminate this Contract, without further obligation, for the default of the other party or its agents or employees with respect to any agreement or provision contained herein. In the event of default by the contractor, the City reserves the right to procure the item(s) bid from other sources and holds the bidder responsible for excess costs incurred as a result. City Council may elect to refrain from doing business with the bidder as stipulated in City Code 2-276 Suspension and Disbarment.

9. *Examination of Records*

(a) The Contractor agrees that the City, or any duly authorized representative, shall, until the expiration of five (5) years after final payment hereunder, have access to and the right to examine and copy any pertinent books, documents, papers and records of the Contractor involving transactions related to this Contract.

(b) The Contractor further agrees to include in any subcontract for more than $10,000 entered into as a result of this Contract, a provision to the effect that the subcontractor agrees that the City or any duly authorized representative shall, until the expiration of five (5) years after final payment under the subcontract, have access to and the right to examine and copy any pertinent books, documents, papers and records of such contractor involved in transactions related to such subcontract, or this Contract. The term subcontract as used herein shall exclude purchase orders for public utility services at rates established for uniform applicability to the general public.

(c) The period of access provided in subparagraphs (a) and (b) above for records, books, documents and papers which may relate to any arbitration, litigation, or the settlement of claims arising out of the performance of this contract or any subcontract shall continue until any appeals, arbitration, litigation or claims shall have been finally disposed of.

10. *Public Records Compliance*. Contractor shall comply with public records laws as set forth in Chapter 119, Florida Statutes, and shall specifically:

(a) Keep and maintain public records required by the City to perform the service.

(b) Upon request from the City's custodian of public records, provide the City with a copy of the requested record or allow the records to be inspected or copied within a reasonable time at a cost that does not exceed the cost provided in Section 119, Florida Statutes, or as otherwise provided by law.

(c) Ensure that public records that are exempt from public records disclosure requirements are not disclosed except as authorized by law for the duration of the Contract term and following completion of the Contract if the Contractor does not transfer the records to the City.

(d) Upon completion of the Contract, Contractor shall transfer to the City, at no cost, all public records in possession of the Contractor and destroy any duplicate public records that are exempt from public records disclosure requirements. All records stored electronically must be provided to the City, upon request from the City's custodian of public records, in a format that is compatible with the information technology systems of the City.

If Contractor does not comply with a public records request, the City shall deem the non-compliance a breach of this Contract, and the Contractor may be subject to penalties under Section 119.0701, Florida Statutes.

CONTRACTOR QUESTIONS RELATING TO CONTRACTOR'S DUTIES TO PROVIDE PUBLIC RECORDS RELATING TO THIS CONTRACT MUST BE FORWARDED TO THE OFFICE OF THE CITY CLERK, CITY HALL, 1000 CITY CENTER CIRCLE, PORT ORANGE, FLORIDA 32129; TELEPHONE: (386) 506-5563; E-MAIL: CITYCLERK@PORT-ORANGE.ORG.

11. *Termination for Non-Appropriation of Funds*

(a) If funds are not appropriated for any succeeding fiscal years subsequent to the one in which this contract is entered into, for the purpose of this Contract, then the City may terminate this Contract upon thirty (30) days prior written notice to the Contractor. Should termination be accomplished in accordance with this Section, the City shall be liable only for payments due through the date of termination.

(b) The City agrees that should it terminate in accordance with this Section, it shall not obtain services which are substantially equal to or similar to those for which this contract was entered into. This provision shall survive any termination of the Contract.

12. *Insurance*. Contractor shall maintain insurance, as required herein, during the life of this Contract. Contractor shall provide to the City, a certificate of insurance endorsing the City of Port Orange as an additional named insured. All insurance coverages of the Contractor shall be primary and non-contributory. All insurance coverages of the Contractor shall not seek contribution from any other insurance or self-insurance available to the City. For workers' compensation coverage, the Contractor's insurance certificate shall include the insurer's waiver of subrogation in lieu of endorsing the City as an additional insured for workers' compensation. The City shall not accept Workers' Compensation Exemptions Contractor may use leased employees if the Contractor ensures that all workers who access the jobsite are employees covered by the employee leasing company, and no non-employees are permitted to access the jobsite. Any Contractor using a leased employee shall complete the City's Leased Employee Affidavit Exhibit Form. Policies for Workers' Compensation may be issued by companies authorized as a group self-insurer by F.S. 440.572.

Policies other than Workers' Compensation shall be issued by insurers licensed and/or duly authorized under Florida Law to do business in the State of Florida and all insuring companies are required to have a minimum rating of "A-" in the "Best Key Rating Guide" published by A.M. Best & Company, Inc. Contractor shall not commence work under this Contract until the City has received a certificate or certificates of insurance with endorsement evidencing the required insurance. Insurer shall provide the City written notice of cancellation, nonrenewal or any other changes

in coverage no later than thirty (30) days prior to the effective date of the change and shall provide notice to the City no later than 10 days after non-payment. The Certificates of Insurance and required insurance policies shall contain provisions that thirty (30) days prior written notice shall be given to the City of any cancellation, intent not to renew, or reduction in the policies or coverages.

Contractor shall require and ensure each of its subcontractors to maintain, until the completion of the subcontractor's work, insurance of the types and to the limits set forth herein. All insurance coverages shall be primary and non-contributory. All insurance coverages of the subcontractors shall not seek contribution from any other insurance or self-insurance available to the City. The Contractor is responsible for ensuring that its subcontractors maintain the required coverage. Failure of the Contractor to ensure the subcontractors maintain the required coverage, shall not relieve the Contractor of any contractual responsibility, obligation or liability.

The City reserves the right to increase insurance coverage as determined for higher risk contracts.

The acceptance by the City of any Certificate of Insurance does not constitute approval or agreement by the City that the insurance requirements have been satisfied or that the insurance policy shown on the Certificate of Insurance is in compliance with this Contract and does not waive the insurance required by this Contract.

Should at any time the Contractor or subcontractors not maintain the insurance coverages required herein, the City may terminate the Contract or at its sole discretion shall be authorized to purchase such coverages and charge the Contractor for such coverages purchased. The City shall be under no obligation to purchase such insurance, nor shall it be responsible for the coverages purchased or the insurance company or companies used. The decision of the City to purchase such insurance coverages shall in no way be construed to be a waiver of any of its rights under the Contract.

Standard Insurance Requirements			
	Insurance	**Standards**	**Additional Requirements**
☒	Workers' Compensation The Contractor shall maintain coverage for its employees with statutory workers' compensation limits, and no less than the limits indicated in the Schedule of Limits for Employers' Liability. Said coverage shall include a waiver of subrogation in favor of the City. **The City will not accept elective exemptions**. Any contractor using an employee leasing company shall complete the Leased Employee Affidavit (Exhibit A).	Contract Amount — Limits Up to $10 million — Statutory/$500,000 $10 - $20 million — Statutory/$1,000,000 Contracts over $20 million To Be Determined by the City.	☐If Contract requires work on or about navigable waters, Longshoreman's and Harbor Workers' Coverage required. ☐If vessels involved, Jones Act coverage with limits of $500,000 required.
☒	Comprehensive General Liability (including Completed Operations and Contractual Liability	Limits: Combined Single Limit Bodily Injury and Property damage $1,000,000 occurrence $1,000,000 aggregate	☐When work is on or under Railroad rights of way or properties, the Contractor shall take out and maintain during the life of the Contract, Railroad protective liability and property damage insurance in amounts as requested by the Railroad.

☒	Comprehensive Business, Automobile Liability to include all owned, hired and non-owned automobiles.	Limits:	Auto Liability Body Injury and Property Damage: $1,000,000 each occurrence $1,000,000 aggregate	
Additional Insurance Requirements				
☐	Property Insurance Builders Risk. Additional Coverage:	Limits:	Buildings - Completed value of Contract. "All Risk" coverage on latest ISO for or its equivalent. Permission granted to occupy. Owner named as insured AIMA	If Agreement requires handling or installation of Owner's equipment, coverage should be furnished on "All Risk" form, including transit and Owner shall be named.
☐	Professional Liability	Limits:	Coverage - $1,000,000	
☐	Installation Floater (IT)	Limits:	Coverage - $ To be determined.	
☐	Contractor Pollution Liability	Limits:	Coverage - $1,000,000	
☐	Errors and Omissions	Limits:	Coverage - $1,000,000	
☐	Umbrella Policy	Limits:	Coverage – $ To be determined.	
☐	Payment and Performance Bond Required	Limits:	Coverage - Equal to amount of Contract.	
☐	**City Manager waives Payment and Performance Bond for work under $25,000.00.**			
☐	**Unless otherwise required by law, City Manager waives Insurance for FOB goods under $25,000.00.**			

13. *A Contract for the purchase* of supplies shall be governed by the City of Port Orange Code of Ordinances, as amended, and such supplies shall be deemed "goods," as defined therein.

14. *Assignability of Contract*. Neither this contract, nor any part hereof, may be assigned by the Contractor to any other party without the express written approval of the City Council.

15. *Modifications or Changes to this Contract*

(a) Change Orders. The Department Head, with the concurrence of the City's signatory as required by the City's Purchasing Policy, shall without notice to any sureties, have the authority to order changes in this Contract which affect the cost or time of performance. Such changes shall be ordered in writing specifically designated to be a change order. Such orders shall be limited to reasonable changes in the services to be performed or the time of the performance. The City will not be held liable for any changes which have not been properly authorized and approved in accordance with this Contract.

(b) If any change under this clause causes an increase or decrease in Contractor's cost of, or time required for the performance of the work hereunder, Contractor shall receive an equitable adjustment in accordance with subparagraph (d), which shall include all compensation to the Contractor, or the City, of any kind in connection with such change, including all costs and damages related to or incidental to such change.

(c) Contractor need not perform any work described in any change order unless it has received a certification from the City that there are funds budgeted and appropriated sufficient to cover the cost of such changes.

(d) No claim for changes ordered hereunder shall be considered if made after final payment in accordance with the Contract.

16. *Sovereign Immunity*. The City expressly retains all rights, benefits and immunities of sovereign immunity in accordance with Section 768.28, Florida Statutes. Notwithstanding anything set forth in any section of this Contract

to the contrary, nothing in this Contract shall be deemed as a waiver of immunity or limits of liability of the City beyond any statutory limited waiver of immunity or limits of liability which may have been adopted by the Florida Legislature or may be adopted by the Florida Legislature and the cap on the amount and liability of the City for damages regardless of the number or nature of claims in tort or equity shall not exceed the dollar amount set by the legislature for tort. Nothing in this Contract shall inure to the benefit of any third party for the purpose of allowing any claim against the City which would otherwise be barred under the Doctrine of Sovereign Immunity or operation of law.

17. *Warranties*. Contractor warrants that (1) the supplies to be provided to the City pursuant to this Contract are fit and sufficient for the purpose intended; (2) the supplies are merchantable, of good quality, and free from defects, whether patent or latent, in material or workmanship, and (3) the supplies sold to the City pursuant to this Contract conform to the standards required by this Contract.

Contractor further warrants that Contractor has title to the supplies provided, and that the supplies are free and clear of all liens encumbrances, and security interests. All warranties made in this Contract, together with service warranties and guarantees, shall run to the City and its successors and assigns.

18. *Additional Warranties*. Contractor further expressly warrants that materials and workmanship are warranted from defect for a one-year period. This is a minimum acceptable warranty.

19. *Additional Bond Security*. If any surety bond furnished in connection with this Contract becomes unacceptable to the City, Contractor shall promptly furnish such additional security as may be required from time to time to protect the interests of the City and a person supplying labor and materials in the prosecution of work contemplated by this Contract. Contractor expressly acknowledges that if the work to be performed hereunder is a public work, a Payment and Performance Bond, in accordance with Florida Statutes Section 255.05, in a form acceptable to the City, shall be provided and recorded with the Clerk of Volusia County at Contractors expense.

20. *Inspection*

(a) All supplies (which term throughout this clause includes without limitation raw materials, components, intermediate assemblies, and their products) shall be subject to inspection and test by the City, to the extent practicable at all times and places including the place of manufacturer, and in any event prior to acceptance.

(b) In the event any supplies or lots of supplies are defective in material or workmanship, or otherwise not in conformity with the requirements of this Contract, the City shall have the right either to reject them (with or without instructions as to their disposition) or to require their correction. Supplies or lots of supplies which have been rejected or required to be corrected shall be removed or, if permitted or required by the Finance Director, corrected in place by and at the expense of Contractor promptly after notice, and shall not thereafter be tendered for acceptance unless the former rejection or requirement of correction is disclosed. If Contractor fails promptly to remove such supplies or lots of supplies which are required to be removed or promptly to replace or correct such supplies or lots of supplies, the City may either (i) by contract or otherwise replace or correct such supplies and charge Contractor the cost for such replacement or correction; or (ii) may terminate this Contract for default as provided in the clause of this Contract entitled "Termination for Default." Unless Contractor corrects or replaces such supplies within the delivery schedule, the Finance Director may require the delivery of such supplies at a reduction in price, which is equitable under the circumstances. Acceptance or rejection of the supplies shall be made as promptly as practicable after delivery, except as otherwise provided in this Contract. Failure to inspect and accept or reject supplies shall neither relieve Contractor from responsibility for such supplies as are not in accordance with the Contract requirements nor impose liability on the City therefor.

(c) The inspection and test by the City of any supplies or lots thereof does not relieve Contractor from any responsibility regarding defects or other failures to meet the Contract requirements, which may be discovered

prior to acceptance. Except as otherwise provided in this Contract, acceptance shall be conclusive except as regards latent defects, fraud, or such gross mistakes as amount to fraud.

21. *Liability for Loss or Damage*.

(a) Contractor shall be liable for any loss of, or damage to, City property caused by the negligence, recklessness, or intended wrongful misconduct of Contractor, his/its agents, servants and employees and shall indemnify and save the City harmless against all actions, proceedings, claims, demands, costs, damages and expenses, including attorney's fees, by reason of any suit or action brought for any actual or alleged injury to or death of any person or damage to property other than City property, resulting from the performance of the Contract by Contractor, his/its agents, servants and employees. Contractor shall submit a full written report to the Finance Director within twenty-four (24) hours following the occurrence of such damage, loss or injury.

(b) To the fullest extent permitted by law, in addition to the express duty to indemnify City when there is any causal connection between Contractor's work and any injury, loss, damage, death or property damage, Contractor expressly undertakes a duty to defend City as a separate duty, independent of and broader than the duty to indemnify. The duty to defend agreed to by Contractor hereby expressly include all costs of litigation, attorney's fees, settlement costs and reasonable expenses in connection with the litigation, whether or not the claims made for loss, injury, damage or property damage are valid or groundless and regardless of whether the defense of City is maintained by the City or assumed by Contractor as long as the claims made could be causally connected to Contractor as reasonable determined by City.

22. *Non-discrimination*. During the performance of this Contract, Contractor agrees as follows:

(a) Contractor will not discriminate against any employee or applicant for employment because of race, religion, color, sex, disability, marital status, age or national origin, except where such is a bona-fide occupational qualification reasonably necessary to the normal operation of Contractor. Contractor agrees to post in conspicuous places, available to employees and applicants for employment, notices setting forth the provisions of this non-discrimination clause. Contractor agrees and fully supports and complies with the Americans with Disabilities Act of 1990.

(b) Contractor shall state in all solicitations or advertisements for employees placed by or on behalf of Contractor that Contractor is an equal opportunity employer.

(c) Notices, advertisements and solicitations placed in accordance with federal law, rule or regulation shall be deemed sufficient compliance with this provision. Contractor shall include the provisions of the foregoing subparagraphs (a), (b), and (c) in every subcontract or purchase order of over $10,000 so that the provisions will be binding upon each subcontractor or vendor.

21. *E-Verify*. Contractor shall utilize the U.S. Department of Homeland Security's E-Verify system to verify the employment eligibility of all new employees hired by the Contractor during the term of this Contract and shall expressly require any sub-contractors performing services pursuant to this Contract to likewise utilize the U.S. Department of Homeland Security's E-Verify system to verify the employment eligibility of all new employees hired by the sub-contractor during the term of this Contract.

22. *Disputes*. The City Manager, who shall reduce his decision to writing and mail or otherwise furnish a copy thereof to Contractor, shall decide disputes with respect to this Agreement. The decision by the City Manager shall be final and binding unless, within five (5) business days from the date of delivery of the decision of the City Manager, appeal is made to the City Council in writing and delivered to the City Clerk, Robin L. Fenwick, MMC. The decision

of the City Council shall be final and binding unless set aside by a court of competent jurisdiction as fraudulent, capricious, arbitrary, or so grossly erroneous as necessary to imply bad faith, or not to be supported by any evidence.

23. *Force Majeure*. Neither party shall be liable for any delay in performance or failure to perform any obligation hereunder if, and to the extent that, such failure or delay is caused by an event of Force Majeure. Force Majeure shall mean any act, event or condition that is beyond the party's reasonable control, that materially and adversely affects the party's ability to perform its obligations hereunder, and that is not the result of the party's willful neglect, error, omission or failure to exercise reasonable due diligence.

24. *Controlling Law*. **THIS AGREEMENT CONTAINS IMPORTANT MATTERS AFFECTING LEGAL RIGHTS AND IS ACCEPTED AND ENTERED INTO IN FLORIDA AND ANY QUESTION REGARDING ITS VALIDITY, CONSTRUCTION, ENFORCEMENT, OR PERFORMANCE SHALL BE GOVERNED BY FLORIDA LAW. ANY LEGAL PROCEEDING ARISING FROM OR IN ANY WAY REGARDING THE AGREEMENT SHALL HAVE ITS VENUE LOCATED EXCLUSIVELY IN THE CIRCUIT COURT OF VOLUSIA COUNTY, FLORIDA, AND THE PARTIES HEREBY EXPRESSLY CONSENT AND SUBMIT THEMSELVES TO THE PERSONAL JURISDICTION AND VENUE OF THE COURT.**

25. *Additional Provisions*. This Contract includes all additional provisions as may have been outlined in written quotes and purchase orders and any attachments or exhibits to this Contract whether delivered herewith or subsequently approved as a part hereof, such as drawings or technical specifications prepared in the performance of this work. In the event of a conflict between any attachments or exhibits to this Contract, and this Contract, the language of this Contract shall control.

26. *Integration*. This Contract and the documents incorporated herein by reference shall constitute the whole agreement between the parties. There are no promises, terms, conditions, or obligations other than those contained herein, and this Contract shall supersede all previous communications, representations, or agreements, written or verbal, between the parties hereto.

27. *Notice*. For purposes of this agreement, notices shall be sent as follows:

City:
City of Port Orange
Attention: City Manager
1000 City Center Circle
Port Orange, Florida 32129
(386) 506-5501

Copy to:
City of Port Orange
Attention: Junos Reed, Engineering Director
1000 City Center Circle
Port Orange, Florida 32129
(386) 506-5751

Contractor:
Danus Utilities, Inc.
Attention: Dan J. Pardus, President
2320 Beardall Avenue
Sanford, Florida 32771
(386) 882-6200 – Telephone
Raymond@danusutilities.com

P.O. Box 291671

Port Orange, Florida 32129

Any notice or other communication given under the Contract will be in writing and delivered by hand, sent by facsimile (provided acknowledgement of receipt thereof is delivered to the sender), sent by certified, registered mail, or sent by any nationally recognized overnight courier service to the addresses provided herein. The parties may, from time to time and at any time, change their respective addresses and each will have the right to specify as its address any other address by at least 10 days written notice to the other party.

28. *Contract Construction*

This Agreement may be executed in one or more counterparts, each of which shall be deemed to be an original but all of which together shall constitute one and the same instrument. The delivery by facsimile or e-mail of an executed copy of this Agreement shall be deemed valid as if an original signature was delivered. No contract shall be formed between Contractor and the City until the City signs this Agreement.

29. *Authority to Sign*. Each person signing this Agreement warrants that he or she is duly authorized to do so and to bind the respective party to the Agreement.

Remainder of page intentionally left blank

Witnesses:

Printed Name: Preston Pardus

Printed Name: Andrew Darling

DANUS UTILITIES, INC.

By: _____

Dan J. Pardus, President

If this Contract is signed by an individual not identified as the President of the corporation in the records of the Florida Department of State, Division of Corporations, please provide written authorization for that individual to enter into contracts on behalf of the corporation.

Date: July 5, 2023

CITY OF PORT ORANGE

By: _____
Donald O. Burnette, Mayor

Date: 7/18/2023

ATTEST:

By: _____
Robin L. Fenwick, MMC, City Clerk

Date: 7/18/2023

EXHIBIT "1"

Contractor's Quote, Scope of Services, Addendum No. 1, and Addendum No. 2 of ITB 23-07

Consisting of 11 Pages

REVISED (ATTACHMENT 1) SCHEDULE OF UNIT PRICING

CITY OF PORT ORANGE

ITB #23-07

SANITARY SEWER MANHOLE LINING

Completed REVISED (Attachment 1) Schedule of Unit Pricing MUST be included with Bid Submission

Estimated quantities of work provided on REVISED (Attachment 1) Schedule of Unit Pricing are for establishing the unit price per bid item. The City does not guarantee the amount of work to be done under this contract.

Bidders are required to complete all fields shaded in green.

NAME OF BUSINESS:	Danus Utilities, Inc.
CONTACT PERSON:	Robert Brown
EMAIL ADDRESS:	robert@danusutilities.com
AUTHORIZED NAME:	Daniel J Pardus
AUTHORIZED SIGNATURE:	
STATE OF FLORIDA GC/CUC #:	27-0404772

ITEM #	DESCRIPTION	UNIT	ESTIMATED QUANTITIES	UNIT PRICE	EXTENDED PRICE
	GENERAL				
1	Mobilization	EA	4	$1,000.00	$4,000.00
2	FDOT Maintenance of Traffic (Index 102-602)	Day	1	$450.00	$450.00
3	FDOT Maintenance of Traffic (Index 102-603)	Day	1	$925.00	$925.00
4	FDOT Maintenance of Traffic (Index 102-613)	Day	1	$750.00	$750.00
				TOTAL GENERAL LINE ITEMS (1-4)	$6,125.00
	CONSTRUCTION				
1	Lining of Manholes/Wet Wells using Raven 405 Epoxy Lining System	SF	20000	$37.00	$740,000.00
2	Cementious Build Back of Existing Manhole/Wet Well Structure with Minimal Deterioration Up to 2" Thick	SF	1000	$5.00	$5,000.00
3	Cementious Build Back of Existing Manhole/Wet Well Structure with Severe Deterioration Up to 4" Thick	SF	500	$9.00	$4,500.00
4	Chemial Grout to Stop Ground Water Infiltration per Tube of AV202 Multigrout	EA	15	$125.00	$1,875.00
5	Chemial Grout to Stop Ground Water Infiltration (Heavy)	Gal	5	$475.00	$2,375.00
6	Lining of Manholes/Wet Wells using Cured in Place Lining System - Single Layer	SF	200	$40.00	$8,000.00
7	Lining of Manholes/Wet Wells using Cured in Place Lining System - Multiple Layers	SF	200	$41.00	$8,200.00
8	Replacement of Manhole Ring and Cover in Grass (using Cast Iron R&C)	EA	25	$1,350.00	$33,750.00
9	Replacement of Manhole Ring and Cover in Grass (using CAPP HDPE R&C)	EA	25	$2,250.00	$56,250.00
10	Replacement of Manhole Ring and Cover in Pavement (using Cast Iron R&C)	EA	50	$1,750.00	$87,500.00
11	Replacement of Manhole Ring and Cover in Pavement(using CAPP HDPE R&C)	EA	15	$2,650.00	$39,750.00
12	Salvaging Manhole Ring and Cover	EA	25	$1.00	$25.00
13	Raising of Manhole Ring and Cover 1"-6" when repalcing Ring and Cover	EA	10	$150.00	$1,500.00
14	Raising of Manhole Ring and Cover 7"-12" when repalcing Ring and Cover	EA	5	$300.00	$1,500.00
15	Inflow Dish HDPE	EA	25	$100.00	$2,500.00
16	Inflow Dish Stainless Steel	EA	25	$225.00	$5,625.00
17	Chimney Seal	EA	15	$400.00	$6,000.00
18	Manholes Lacking Benches and Inverts	EA	25	$750.00	$18,750.00
19	Asphalt Patch up to 7'x7'x1.5" thick w/ Road Base	LS	30	$1,750.00	$52,500.00
20	Vactor Vacuum Truck (disposal not included)	HR	4	$375.00	$1,500.00
				TOTAL CONSTRUCTION LINE ITEMS (1-20)	$1,077,100.00
				Grand Total - GENERAL & CONSTRUCTION LINE ITEMS	$1,083,225.00

SECTION 3 – SCOPE OF WORK

A.1 SCOPE

It is the intent of this Specification to cover all aspects of rehabilitation of manholes and wet wells including types of repairs, methods of repair, materials, and equipment.

Sanitary sewer manhole lining covers the following type of repairs:

A. Lining and sealing of sanitary manholes and wet wells.

B. Replacement of manhole ring and cover.

C. Raising of existing manhole ring and cover to existing or above grade.

D. Manhole Inflow Dish.

E. Manhole Chimney Seal.

A.2 LINING OF MANHOLES USING URETHANE/EPOXY-BASED LINING

A. A Project Manager or Project Supervisor, representing the Contractor shall always be present while work is being performed by either the Contractor or Subcontractors.

B. General: The work consists of applying with a brush, roller, airless or air-assisted spray a urethane/epoxy-based material to the walls, inverts, and benches of manholes and wet wells, resulting in a monolithic liner of a minimum 1/4 inches (250 mils) in thickness or more, as determined by the manufacturer for the specific depth and water table. Greater urethane/epoxy-based line thicknesses may be required on specified structures as directed by the city. The applicator shall furnish all labor, equipment, and materials for installing the lining over pre-cast concrete, concrete block, masonry brick manholes or other structures exposed to a sanitary sewer environment, new or used, using approved equipment. The installation shall be in accordance with the following Contract Specifications along with manufacturer's recommendations.

C. Materials

1. Mixture: A proprietary urethane/epoxy-based material specifically designed for manhole applications shall be Raven 405 as manufactured by Raven Lining Systems or City Engineer approved equal. The product shall be corrosion resistant to the ingredient of the sanitary sewer environment and shall be designed to bond to wet (not running) surfaces.

2. Water: Shall be clean and potable.

3. Other Materials: No material shall be used with or added to mixture without prior approval by the City Engineer.

D. Properties

1. Physical:

a. Tensile stress, ASTM D-638 - 7,600 psi
b. Tensile Ultimate Elongation ASTM D638 – 1.5%
c. Compressive Strength ASTMD 695 – 18,000 psi
d. Flexural strength, ASTM D-790 – 13,000 psi
e. Flexural modulus, ASTM D-790 – 550,000 psi

2. Liner Mix shall be made with manufacturer's recommendations for manhole applications.

E. Application

1. Preparation:

   a. Place covers over invert before prepping.
   b. All foreign materials shall be removed from the manhole walls and bench using high-pressure water spray (minimum 5,500 psi). loose and protruding brick, mortar and concrete shall be removed using a mason's hammer and chisel. All non-leaking voids shall be filled with non-shrink cement-based material containing hydraulic cement, as approved and directed by the city.
   c. Active leaks shall be stopped using products specifically for that purpose and according to manufacturer's recommendations. Chemical Grouting with Avanti 202 or approved equal shall be used to cease inflow into manholes.
   d. Excessively leaking manholes shall be drilled through the manhole wall and injected with grout sealant. Payment for this item of work shall be at the unit price bid only if normal active leak stoppage methods are not effective and said work is approved by the city.
   e. All loose material shall be removed following the completion of preparation work.
   f. The sanitary sewer flow shall be diverted as necessary to perform the required manhole rehabilitation.

2. Spray Application of the Liner:

   a. Prior to spraying, surfaces to be rehabilitated shall be damp without noticeable free water droplets or running water. Material shall be spray applied to a minimum uniform thickness to ensure that all voids and crevices are filled smooth.
   b. The application of the liner shall provide a monolithic liner having a minimum total average thickness of 250 mils (0.25 inches) or thicker as directed by the city. The finished liner shall have an equal total average thickness throughout the structure to be rehabilitated. If the manufacturer's recommendations require a greater minimum total average thickness due to hydrostatic loading caused by the water table, the manufacturer's recommendations shall control. The liner shall be applied to the invert, bench, vertical walls, cone section, and all other surfaces made of brick, tile, pre-cast concrete, or concrete block within the structure's interior. Within rehabilitated manholes, the invert and bench shall be smooth and sloped in the direction of the flow. The manhole bench shall have a gradual slope to the invert. The invert transition to the pipe shall be smooth and shall not impair the flow.
   c No application shall be made when ambient temperatures are less than 40ºF and when freezing is expected within 24 hours unless specific recommendations are made by the manufacturer.
   d. A minimum of 30 minutes cure time or more as required by the product manufacturer shall be allowed before returning to active flow.

F Payment

1. Payment for the lining of manholes and wet wells with Urethane/Epoxy-Based spray lining application will be per square foot of surface area lined and shall include any cost associated with the installation of the liner as outlined in this section.

A.3 LINING OF MANHOLES USING CURED-IN-PLACE LINING SYSTEMS

Manholes constructed with brick or tile which are structurally compromised as determined by the City or Engineer will be repaired using a cured-in-place lining system.

A. A Project Manager or Project Supervisor, representing the Contractor shall always be present while work is being performed by either the Contractor or Subcontractors.

B. General: The work consists of installing a resin impregnated custom fabricated liner by means of air inflation into an existing manhole, wet well, pump station, or catch basin. The liner is installed from the top of the casting to the top of the channel which includes shim rings, casting chimney interface, chimney, cone, wall and bench. The channel can be included as directed by the owner. When cured, the liner will provide a durable monolithic chemical resistant barrier that will protect the existing substrate from further deterioration. The finished liner will also stop any water from either entering or exiting from the lined surfaces of the original substrate.

C. Materials

The Liner shall be composed in one of the following two configurations.

1. Single Layer - Non-Porous Membrane
    i. Non-Porous Membrane is to be a gas and liquid impermeable membrane of special non-porous materials with felt mechanically embedded on both sides. Membrane is to be custom fabricated to fit to the inside dimensions of each structure.
2. Multiple Layers - Non-Porous Membrane and fiberglass.
    i. Non-Porous Membrane is to be a gas and liquid impermeable membrane of special non-porous materials with felt mechanically embedded on both sides. Membrane is to be custom fabricated to fit to the inside dimensions of each structure.
    ii. Fiberglass shall be a coated woven roving style to allow for resin adherence. The weight of the fiberglass and number of layers required shall be based on the manufactured published data and the stamped design for minimum wall thickness.
3. RESIN SYSTEM
    i. Resin shall be 100% solids epoxy formulated to withstand a typical domestic wastewater sewer system including high sulfide areas near force mains and wet wells. The resin must be compatible with both the non-porous membrane and the fiberglass. The resin must have a minimum of 250psi bond strength to wet or dry brick and concrete surfaces.

D. PREPARATORY PROCEDURES

1. PH of the original substrate shall be determined.
2. Contractor will perform preliminary cleaning of the structure with high-pressure water-blasting at a minimum of 4000psi and 4gpm to obtain the desired concrete surface profile (CSP) of 3 or greater.
3. If the desired CSP is not achieved by high-pressure water-blasting other methods of obtaining the surface profile such as abrasive blasting and acid etching shall be used.
4. The Contractor shall remove all the existing manhole steps. The metal portion of all steps will be removed to within ½" of the manhole interior wall surface. The remaining protruding metal portion of the step shall be covered with a cementitious material to provide a smooth surface on and around the protrusion for the liner to bond.
5. All open joints, voids, holes, cracks, and missing bricks larger than 3 inches in diameter or equivalent shall be patched with a cementitious material to provide a smooth surface for the liner to bond. All loose, cracked or disintegrated material shall be removed from the area to be patched exposing a sound substrate. The cementitious patch material shall be allowed to cure according to the manufacturer's specifications before continuing with the Liner installation process.
6. Bench shall be sloped so that water will flow back into channel.
7. All active water leakage shall be stopped for a minimum of 30 minutes prior to installation to allow time to insert and pressurize the Liner. This prevents resin washout and allows proper curing and bonding. Leaks may be stopped with fast setting cement or chemical grout injection.
8. When the channel is required to be lined the Contractor shall plug the inlet pipe, inspect for infiltration leaks around the inlet and outlet pipes and in the channel. All leaks present shall be stopped using chemical grout injection and/or using fast-setting cement.
9. Contractor shall remove any incoming pipes to within 2 inches of the wall. The pipe outside circumference shall be cemented with an approximate 60º taper, forming a filet between the structure wall and the pipe making a smooth transition for the liner to bond.
10. The final prepared surface shall have a concrete surface profile of 3 or greater and have a smooth uniform appearance.
11. After the above-mentioned procedures the surface shall be cleaned with degreaser or other solvents, as needed, to remove any film, grease, loose patching material, chemical grout or residue on the surface. Structure shall then be pressure rinsed with water.

E. GENERAL INSTALLATION PROCESS

1. Contractor shall verify that the liner intended for the structure matches the dimensions of the structure by measuring the dimensions of the structure and the liner prior to installation.
2. All resin intended for the liner shall be mixed properly.
3. Contractor shall apply mixed resin evenly onto both the inside and outside of the entire liner with rollers. There shall be no white spots (dry Liner) on either side of the Liner including seams and bottom disk(s). Areas of heavily saturated resin shall be spread out to cover areas that are deficient of resin.
4. Liner can be installed to include or omit the structure channel depending upon the intention of the owner.

5. For Liner installation that does not include the channel, a temporary subfloor shall be constructed to keep liner from inflating into the channel and to allow the sewer to flow unobstructed without bypass pumping. A saturated bottom disk or disks are installed onto the subfloor, bench, and up the wall about 6 inches.
6. For channel lining the incoming and outgoing pipes are plugged. This may require bypass pumping. Two or more bottom disks are placed into the channel, onto the bench, and 6 inches up the wall.
7. Resin saturated Liner is lowered into the structure and positioned properly to line up any offsets.
8. Liner is pressurized with air or water to a minimum of 3psi or liner manufactures minimum pressure. Contractor shall verify proper position of the liner from the inspection portal located on the installation canister. If Liner is not positioned properly the Liner can be raised, lowered or rotated to desired position. In some cases, it may be necessary to enter the structure to hand position portions of the liner.
9. The liner is cured with steam, hot water, or ambiently. Cure times vary according to, cure method, Liner thickness, structure size, ambient temperatures, and resin formulation. Typically, curing takes about an hour with steam. Contractor may use the exposed portion of the Liner above the frame as an indicator. When steam is used, a cool down period is needed equaling about 25% of cure time.
10. Liner shall be cut and trimmed to allow for all incoming and outgoing pipe to flow without obstruction. If channel is unlined the subfloor shall be removed.
11. All cut edges shall be sealed with an epoxy mastic material that is compatible with the Liner System.

F. FINISHED LINER
1. The finished Cured-In-Place (CIP) Liner System shall be continuous over the entire length of the structure from the cover seat to the top of the channel or shall include the channel as required. The Liner shall be smooth with minimal wrinkling.
2. Liner shall be bonded to the structure, as required by design, and in such a way as to not allow any water to flow behind the liner and enter back into the waste stream.

G. PAYMENT
1. Payment for the lining of manholes and wet wells with Cured-in-Place Lining System will be per square foot of surface area lined and shall include any cost associated with the installation of the liner as outlined in this section.

A.4 REPLACEMENT OF MANHOLE RING AND COVER

A. General: This section deals with the replacement of existing manhole rings and covers when new manhole rings and covers are required.

1. New Manhole Ring and Cover: Existing manhole ring and covers shall be cleaned and reinstalled where directed by the City. Where required, the existing manhole ring and cover shall be removed and salvaged, and a new manhole ring and cover installed and adjusted by the Contractor as directed by the City. Removing and replacement of pavement shall conform to the City Standards.

2. New manhole rings and covers shall be provided by the Contractor. The Contractor shall confirm the desired manhole ring and cover model, design, and markings with the City prior to ordering. Rings and covers shall be made of clean, even grain, cast

iron or CAP HDPE. The quality of iron in the castings shall conform to the current ASTM Specification A-48 for Class 30 iron Castings. The castings shall be smooth, true to pattern and free from projections, sand holes or defects. The portion of the ring and cover which forms the cover seat shall be machined so that no rocking of the cover is possible.

3. For HDPE R&C the material shall be a compression-molded, fiber reinforced thermoset composite and shall pass an accelerated weathering test exposing UV and water spray per ASTM G154. Frames and covers shall be capable of withstanding AASHTO M306: Proof Testing H-20/25 with Ultimate Load above 90,000 lbs (9" x 9" platen). Covers must weigh at least 70 lbs. Frames must weigh at least 40 lbs. The space between cover outside diameter and frame wall inside diameter shall be less than ¼" total (less than 1/8" per side). Exposed locks, nuts, bolts, hooks, and other metallic attachments must be 316 Stainless Steel – Austenite. Locks must be independent of the lift-point on the cover. Covers must be detectable with standard metal detectors. Both the cover and frame must be marked with permanent molded detail forming the text and logos from the composite substrate (rather than surface decals, veils, paint, inks, dyes, markers) including the following: 1) Made In USA, 2) Manufacturing Date, 3) Molder Name, 4) Load Rating, 5) Logos per Utility Drawings, and 6) non-metallic indication. Covers and Frames shall be molded by the same manufacturer and as detailed in drawings. Gaskets shall be bonded to the frame continuously at the interface with the cover to reduce wear, shock, noise, malodors and infiltration. Gaskets must be EPDM or Neoprene. Molded frame material dimensions must exceed 0.5 inches thick: e.g. walls, flanges, wall supports, and cover ledge supports. Flanges must extend at least 2 inches outward from the outside of the vertical wall. Anchor holes must be molded into the flange. All covers and frames shall be molded, assembled, and tested in the USA.

4. All HDPE manhole ring and covers shall be manufactured by Composite Access Products (CAP) or city approved equal.

5. On paved streets, the ring and cover shall be set flush with the finished grade and in the plane of the paved surface. In other locations, they shall be set to the grades determined in the field by the City.

A.5 SALVAGING MANHOLE RING AND COVER

All existing undamaged manhole rings and covers removed from the manholes shall be considered as salvaged rings and covers. These salvaged rings and covers shall always remain the property of the City after removal and delivered to the City.

Reasonable care shall be exercised to prevent unnecessary damage to the salvaged rings and covers.

The Contractor shall, upon removal of ring and cover, remove all grout from the salvaged ring and cover. The cover shall then be tied to the ring using a minimum of two (2) or more pieces of six (6) gauge wire and provided to the City.

A.6 RAISING OF EXISTING MANHOLE RING AND COVER

Existing manholes below grade shall be raised to grade using either a cast iron riser ring, concrete "donut" riser, or manhole riser section as directed by an Engineer or the City. When adjusting with brick, a maximum of 16 inches adjustment will be allowed. The mortar shall be troweled to a smooth finish.

A.7 INFLOW DISH

An inflow dish shall be installed when required by the Engineer or the City in specified manholes to prevent excessive rainwater from entering the manhole cover. Inflow dishes shall be "Rainstopper" type or an Engineer-approved equal. Inflow dishes and components shall be manufactured of material resistant to corrosion from atmospheres containing hydrogen sulfide and dilute sulfuric acid. The inflow dish shall allow venting of sewer gasses. The inflow dish shall be constructed HDEP material or 316 stainless steel and shall be anchored to the manhole by a tether. Installation shall be in accordance with the manufacturer's recommendations and shall not impede the proper seating of the manhole cover.

A.8 CHIMNEY SEAL

A chimney seal shall be installed when required by an Engineer or the City in specified new or existing manholes to stop inflow in the chimney area. Chimney seals shall be "Flex-Seal" as manufactured by Sealing Systems, Inc., or "Ring Seal" as manufactured by Southwestern Packing and Seals, Inc. or "Internal Manhole Chimney Seal" as manufactured by Cretex Specialty Products. The chimney seal shall be secured to the manhole cone and the cover ring. The chimney seal shall have a design life of at least 25 years. The chimney seal shall be installed in the manhole in accordance with the manufacturer's recommendations.

A.9 MANHOLES LACKING BENCHES AND INVERTS

Manholes lacking benches and inverts shall require building of the bench and invert prior to performing any rehabilitation. Measurement and payment shall be determined by the cubic yards of concrete used to complete the bench and invert.

A.10 WARRANTY

All lining installations shall be warranted to be free from defects in materials and workmanship for a period of five (5) years from the date of project acceptance. Should a defect occur during this five (5) year period that is attributable to the lining installation or materials, then this defect shall be repaired within four (4) weeks from the date of defect notification to the contractor at no additional cost to the City.

The Contractor shall be responsible for all required repair costs associated with a lining failure during the warranty period including all cost associated with backups and all other property damage.

END OF SECTION

CITY OF PORT ORANGE
PURCHASING DIVISION
1000 CITY CENTER CIRCLE
PORT ORANGE, FLORIDA 32129
TELEPHONE 386-506-5717
purchdiv@port-orange.org

ADDENDUM #1
May 25, 2023
ITB #23-07 SANITARY SEWER MANHOLE LINING

To All Bidders:

The following changes, clarifications and additions are hereby made part of the bidding and specifications for the above referenced project dated May 10, 2023 and prepared by the City of Port Orange Purchasing Division as fully and completely as if the same were fully set forth therein. It is the sole responsibility of bidder to confirm that all addenda have been received prior to submitting bid and acknowledge such in the bid documents.

NEW BID OPENING DATE

The bid opening date of June 7, 2023 at 2:30 p.m. is hereby changed to June 14, 2023 at 2:30 p.m.

A. CHANGES TO SPECIFICATIONS:
None

B. CLARIFICATIONS:
None

C. QUESTIONS & ANSWERS:
None

In all other respects, except as specifically stated herein, the subject ITB #23-07 SANITARY SEWER MANHOLE LINING remains unchanged.

END OF ADDENDUM #1

CITY OF PORT ORANGE
PURCHASING DIVISION
1000 CITY CENTER CIRCLE
PORT ORANGE, FLORIDA 32129
TELEPHONE 386-506-5717
purchdiv@port-orange.org

ADDENDUM #2
June 7, 2023
ITB #23-07 SANITARY SEWER MANHOLE LINING

To All Bidders:
The following changes, clarifications and additions are hereby made part of the bidding and specifications for the above referenced project dated May 10, 2023 and prepared by the City of Port Orange Purchasing Division as fully and completely as if the same were fully set forth therein. It is the sole responsibility of bidder to confirm that all addenda have been received prior to submitting bid and acknowledge such in the bid documents.

A. CHANGES TO SPECIFICATIONS:
None

B. CLARIFICATIONS:
The City of Port Orange has standardized to Raven Lining system for the rehabilitation of sanitary manholes.

C. REVISED (ATTACHMENT1) SCHEDULE OF UNIT PRICING
Bidders are advised they must complete REVISED (Attachment1) Schedule of Unit Pricing. If Bidder does not complete and include with bid submittal REVISED (Attahchment1) Schedule of Unit Pricing, their bid will be deemed non-responsive. REVISED (Attachment1) Schedule of Unit Pricing is posted as a separate document on DemandStar and the City of Port Orange Purchasing Web page at https://www.port-orange.org/bids.aspx.

D. QUESTIONS & ANSWERS:
1) Engineered Coatings Solutions, LLC provides rehabilitation and specialty coatings for water/wastewater systems. We would like our products to be considered as equal for this solicitation.
   Answer: This is not an approved product.
2) Is Sewpercoat or Strong Seal an approved equal for the above referenced project.
   Answer: This is not an approved product.
3) GML Coatings (Green Monster) is requesting to be an approved material for the manhole and wet well rehabilitation.
   Answer: This is not an approved product.
4) Nukote Coating Systems saw that Cementitious and Cement Mortar Lining were included as methods or rehab for Manholes and Wet Wells. Would the City of Port Orange be open to include a Fully Structural Spray Applied Liner on this project as an alternate? Nukote manufactures an Anti-Corrosive, Semi-Structural and Fully Structural Spray Applied Lining System to rehabilitate Water Structures.
   Answer: This is not an approved product.

5) Will you accept Tnemec Epoxytec CPP Sprayliner MH for this Project?
   Answer: This is not an approved product.
6) Will it be required to present a number for every line on the Schedule of Unit Pricing?
   Answer: Yes, all costs must be provided for all items on the Revised (Attachment 1) Schedule of Unit Pricing.
7) Will the lines for the CIPM need to be complete if the line for the Epoxy coating is complete?
   Answer: All costs must be provided for all items on the Revised (Attachment 1) Schedule of Unit Pricing.
8) Will it be the City's intention to use both types of coating or will the City decide to use one instead of the other?
   Answer: The City will use both types, depending on the condition of the manhole being lined.
9) Is there a Pay Item for Maintenance of Traffic if we need to close a turn lane or multi lane where flaggers are not required if there is no shoulder to park trucks and equipment on which would essentially be "Standard Plans 102-613"?
   Answer: Please see Item #4 on the Revised (Attachment 1) Schedule of Unit Pricing.

In all other respects, except as specifically stated herein, the subject ITB #23-07 SANITARY SEWER MANHOLE LINING remains unchanged.

END OF ADDENDUM #2

EXHIBIT "2"

Task Authorization Example

Consisting of 3 Pages

TASK AUTHORIZATION NO. __
Standard Contract for Services dated _____
Between the City of Port Orange, Florida and _____

THIS Task Authorization is entered into by and between the **CITY OF PORT ORANGE, FLORIDA**, a chartered municipal corporation with its principal place of business at 1000 City Center Circle, Port Orange, Florida 32129 (the "City") and _____, a _____ corporation with its principal place of business at _____ ("Contractor"), and hereinafter collectively referred to as the "Parties," and is to that certain Standard Contract for Services dated _____, and any amendments thereto, hereinafter collectively referred to as the "Contract." The Parties, in exchange for the mutual covenants contained herein and in the Contract, agree as follows:

1. This Task Authorization expressly modifies the Contract and in the event of a conflict, the terms and conditions of this Task Authorization shall prevail.

2. In addition to all other terms and conditions contained in the Contract, Contractor shall provide services relating to _____ as more particularly described in the Scope of Services attached hereto and incorporated herein as Task Authorization Exhibit "1."

3. Contractor shall complete the services to be provided herein within _____ days of the date of written notice by the City to the Contractor.

4. In return for the services identified above, the City agrees to compensate Contractor at the prices set forth in Exhibit "__" attached hereto and made a part hereof for all purposes, subject to a limit not to exceed $_____. All payments shall be governed by the Local Government Prompt Payment Act as set forth in Sections 218.70 through 218.79, Florida Statutes, as amended.

5. Contractor shall provide a 100% Combination Payment and Performance Bond in accordance with Florida Statutes Section 255.05, including the Front Page and Certificate for Filing in Public Records, in a form substantially similar to the forms attached hereto as Task Authorization Exhibit "__," and acceptable to the Port Orange City Attorney, and recorded with the Clerk of Volusia County at Contractor's expense. A separate bond shall be provided from the Surety which identifies and covers the scope of work for the project stated in this Task Authorization along with all other provisions of this Task Authorization with the penal sum of such bond being not less that the contract sum described in this Task Authorization. If any surety bond furnished in connection with this Task Authorization becomes unacceptable to the City, Contractor shall promptly furnish such additional security as may be required from time to time to protect the interests of the City and a person supplying labor and materials in the prosecution of work contemplated by this Task Authorization No. __.

6. This Task Authorization may be executed in one or more counterparts, each of which shall be deemed to be an original but all of which together shall constitute one and the same instrument. The delivery by facsimile or e-mail of an executed copy of this Task Authorization shall be deemed valid as if an original signature was delivered. No contract shall be formed between the Contractor and the City until the City signs this Task Authorization.

IN WITNESS WHEREOF, the Parties have made and executed this Task Authorization for the purposes herein expressed on the dates set forth below.

Witnesses: _____

_____ By: _____
Printed Name: _____ Printed Name: _____
Title: _____

_____
Printed Name: _____ Date: _____

CITY OF PORT ORANGE

By:_____
Wayne Clerk, City Manager OR
Donald O. Burnette, Mayor

Date:_____

ATTEST:

By:_____
Robin L. Fenwick, MMC, City Clerk

Date:_____

EXHIBIT "3"

Payment and Performance Bond

Consisting of 3 Pages

FRONT PAGE FOR BOND REQUIRED BY SECTION 255.05, F.S.

PAYMENT AND PERFORMANCE BOND

(Public Works)

Notice and Time Limitations Must Be In Accordance
With Section 255.05(2), (8) and (10), Florida Statutes

BOND NO. _____

PRINCIPAL:

Developer or Contractor:	Danus Utilities, Inc.
Principal Business Address:	2320 Beardall Avenue Sanford, Florida 32771
Contact Person:	Dan J. Pardus, President
Phone Number:	(386) 233-5588

SURETY: _____

Address: _____

_____

Contact Person: _____

Phone Number: _____

OWNER: City of Port Orange, Florida, a chartered municipal corporation
1000 City Center Circle
Port Orange, Florida 32129-4144

Contact Person: City Manager

Phone Number: (386) 506-5501

Amount: $_____ **City Project Number: ITB 23-07 Sanitary Sewer Manhole Lining**

Description of Work: Sanitary Sewer Manhole Lining

Project Location: _____ Port Orange, Volusia County, Florida

Legal Description: _____ Port Orange, Volusia County, Florida

Front Page

All other pages are subsequent to this page regardless of any numbers that may be printed thereon.

Danus Utilities, Inc.

ITB 23-07 Sanitary Sewer Manhole Lining

Bond No._____

COMBINATION PAYMENT AND PERFORMANCE BOND
FOR
PUBLIC CONSTRUCTION

per Section 255.05, Florida Statutes
Guaranty for Construction of Public Improvements

BY THIS BOND, We, **Danus Utilities, Inc.**, as Principal, and _____, a corporation, as Surety, are bound to **CITY OF PORT ORANGE, FLORIDA**, a Florida municipal corporation, herein called "Owner" or sometimes referred to as "City," in the sum of _____ **AND __/100 DOLLARS** (**$**_____), for payment of which we bind ourselves, our heirs, personal representatives, successors, and assigns, jointly and severally.

THE CONDITION OF THIS BOND is that if Principal:

1. Performs the terms of that certain Standard Contract for Services, having an effective date of _____, entered into by and between the Principal and the City, for Sanitary Sewer Manhole Lining, hereinafter referred to as the "Contract," being made a part of this bond by reference, at the times and in the manner prescribed in the Contract; and

2. Promptly makes payments to all claimants, as defined in Section 255.05(1), Florida Statutes, supplying Principal with labor, materials, or supplies, used directly or indirectly by Principal in the prosecution of the work provided for in the Contract (the "Work"); and

3. Pays Owner all losses, damages, delay damages (including contractually authorized liquidated damages), expenses, costs, and attorney's fees, including appellate proceedings, that Owner sustains because of a breach or material breach by Principal under the Contract documents; and

4. Performs the guarantee of all work and materials furnished under the Contract for the time specified in the Contract, then this bond is void; otherwise it remains in full force.

Notice of Nonpayment and Time Limitations

Any action instituted by a claimant under this bond for payment must be in accordance with the notice and time limitation provisions in Sections 255.02(2), (8) and (10), Florida Statutes.

Any changes in or under the contract documents and compliance or noncompliance with any formalities connected with the contract or the changes does not affect Surety's obligation under this bond.

IN WITNESS WHEREOF, this performance and payment bond is executed and shall be deemed an original, this _____, day of _____, 20__.

Attest:

DANUS UTILITIES, INC.
(Principal)

_____
(As to Corporate Principal) Secretary

By:_____
Dan J. Pardus, President

_____
(Witness to Principal)

(Corporate Seal)

_____
(Surety)

_____
(Witness to Surety)

By:_____
Name:_____
(Attorney-in-Fact)

(Corporate Seal)

NOTE: ***Date of BOND must not be prior to date of Contract.*** *If Developer/Principal is Partnership, all partners should execute BOND. All BONDS signed by an agent must be accompanied by a certified copy of the authority to act.*

IMPORTANT: Surety companies executing BONDS must appear on the Treasury Department's most current list (Circular 570 as amended) and be authorized to transact business in the State of Florida.

HUMAN TRAFFICKING AFFIDAVIT
(SECTION 787.06, FLORIDA STATUTES)

STATE OF FLORIDA §
§
COUNTY OF VOLUSIA §

The undersigned ("Affiant"), on behalf of the entity listed below ("Entity"), after being duly sworn, hereby attests as follows:

1. My name is Daniel J Pardus. I am over the age of Twenty-one years old. I am the President (Title) of Daniel J Pardus (Business Name), a non-governmental entity which does business in the State of Florida, hereinafter called the "Entity."

2. I have personal knowledge of each and every statement of fact contained herein, and each and every statement of fact is true and correct.

3. Entity does not use coercion, as defined in Section 787.06, Florida Statutes, for labor or services.

4. The undersigned is an officer or representative of the entity and is authorized to execute this affidavit on behalf of the Entity.

5. Under penalties of perjury, I declare that I have read the foregoing Human Trafficking Affidavit and that the facts stated herein are true.

Further Affiant sayeth not.

Date: September 5, 2024

Signed: _____

Print Name: Daniel J Pardus

Title: President

SUBSCRIBED AND SWORN before me by means of [XX] physical presence or [__] online notarization on the 5 day of September, 2024 by Daniel J Pardus as President on behalf of Danus Utilities, Inc. who is personally known to me or who has produced Personally Known as identification.

(Notary Seal)

ROBERT H. BROWN
MY COMMISSION EXPIRES
OCTOBER 23, 2025
#HH 145852
Bonded thru Notary Public Underwriters
NOTARY PUBLIC, STATE OF FLORIDA

_____
Notary Public, State of Florida
Printed name, commission and expiration of commission term

SKB.7.8.2024
CA7985

CITY COUNCIL AGENDA ITEM

COUNCIL MEETING DATE 3/18/2025

SUBJECT: (D6f) Approval of the First Amendment to the Second Addendum to the Third Amendment and Restatement of Lease Agreement with Palmer College Foundation, Inc. for Allen Green Center

DEPARTMENT: City Manager

GOAL: 3 - Quality of Life

RECOMMENDED MOTION: Move to approve the First Amendment to the Second Addendum to the Third Amendment and Restatement of the Lease Agreement with Palmer College Foundation, Inc. and authorize Mayor and City Clerk to sign all necessary documents.

SUMMARY: The City of Port Orange has leased the Allen Green Center to Palmer College for their clinic since 2002. Palmer has been a model tenant and a great partner since their arrival.

On October 3, 2017, Council approved the Second Addendum to the Third Amendment and Restatement of Lease Agreement ("Second Addendum") with Palmer College. The Second Addendum provided, in part, for an extension of the lease period until March 31, 2025, and established a purchase option at the end of the lease period, based on Fair Market Value. Pursuant to the terms of the purchase option included in the Second Addendum, and in furtherance of exercising the purchase option for the Allen Green Center, Palmer remitted $90,000 to the City in March 2024. Under the option to purchase, the closing for the Allen Green Center is to take place on or before March 31, 2025. However, both the City and Palmer need additional time to secure the requisite appraisals to establish the purchase price. In order to comply with the appraisal requirements and complete the closing, it is necessary to extend the deadline to close. The City and Palmer anticipate that the required appraisals and time for closing can be completed on or before May 30, 2025.

PRESENTER: Robin Fenwick

ATTACHMENTS:

1.	First Amendment to Second Addendum to Third Amendment and Restatement to Lease Agreement	First Amendment to Second Addendum to Third Amendment to Lease Agreement.pdf

Robin Fenwick	Created/Initiated - 2/28/2025
Linda Truitt	Approved - 3/3/2025
Matthew Jones	Approved - 3/4/2025
Wayne Clark	Final Approval - 3/7/2025

This Document Prepared by:
Shannon K. Balmer, Senior Assistant City Attorney
City of Port Orange
1000 City Center Circle
Port Orange, FL 32129

FIRST AMENDMENT TO THE SECOND ADDENDUM TO THIRD AMENDMENT AND RESTATEMENT OF LEASE AGREEMENT

THIS FIRST AMENDMENT TO THE SECOND ADDENDUM TO THIRD AMENDMENT AND RESTATEMENT OF LEASE AGREEMENT is made and entered the day and year set forth hereinafter by and between the **CITY OF PORT ORANGE, FLORIDA**, a chartered municipal corporation, with its principal business offices located at 1000 City Center Circle, Port Orange, Volusia County, Florida 32129 ("City" or "Landlord"), and **PALMER COLLEGE FOUNDATION, INC.,** f/k/a Palmer Chiropractic University Foundation, Inc., a not-for-profit corporation duly organized under the laws of the State of Iowa, in good standing and authorized to do business in the State of Florida and d/b/a Palmer College of Chiropractic, Florida, having its principal business office located at: 4777 City Center Parkway, Port Orange, Florida 32129 ("Palmer" or "Tenant"), and hereinafter collectively referred to as the "Parties."

WHEREAS, the Parties entered into a Lease Agreement for the Allen Green Civic Center dated May 9, 2002 ("Lease Agreement"); and

WHEREAS, the Parties entered into a First Amendment and Restatement of Lease Agreement for the Allen Green Civic Center dated February 10, 2003; and

WHEREAS, the Parties entered into a Second Amendment and Restatement of Lease Agreement for the Allen Green Civic Center dated March 20, 2007, having a term from April 1, 2007 to March 31, 2009; and

WHEREAS, the Parties entered into an Addendum to Second Amendment and Restatement of Lease Agreement for the Allen Green Civic Center dated October 16, 2007 relating to insurance and inventory of city property; and

WHEREAS, the Parties entered into a Right of Entry Protocol pursuant to the terms of the Second Amendment and Restatement of Lease Agreement for the Allen Green Civic Center dated March 25, 2008; and

WHEREAS, the Parties entered into a Second Addendum to Second Amendment and Restatement of Lease Agreement for the Allen Green Civic Center dated January 6, 2009, extending the term for one year to terminate at midnight on March 31, 2010; and

WHEREAS, the Parties entered into a Third Amendment and Restatement of Lease Agreement for the Allen Green Civic Center dated January 5, 2010, having a term of ten (10) years, from April 1, 2010 to March 31, 2020; and

WHEREAS, the Parties entered into an Addendum to Third Amendment and Restatement of Lease Agreement for the Allen Green Civic Center dated June 4, 2013, relating

to the repair, replacement or restoration of the building components, which includes replacement of the HVAC system; and

WHEREAS, the Parties entered into the Second Addendum to Third Amendment and Restatement of Lease Agreement ("Second Addendum") for the Allen Green Civic Center dated October 3, 2017, extending the Lease Agreement, as amended, for an additional term of five (5) years, commencing on April 1, 2020, and terminating on March 31, 2025, and adding a purchase option and right of first refusal; and

WHEREAS, Palmer has completed the initial steps in exercising its option to purchase as required by the Second Addendum; and

WHEREAS, the Parties wish to modify the terms of the Lease Agreement, as amended, with regard to extending the term of the Lease Agreement, as amended, and extending the time to close on the option to purchase the Demised Premises as set forth in the Second Addendum; and

NOW, THEREFORE, the Parties, for good and valuable consideration, receipt whereof is hereby acknowledged, agree as follows:

1. The term of the Lease Agreement, as previously amended, shall be extended for an additional two-month period, and terminating at midnight on May 30, 2025.

2. Paragraph 32 of the Lease Agreement, as amended, shall be modified to read, in its entirety, as follows:

> 32. **Purchase Option**. City grants to Palmer an option to purchase the Demised Premises subject to the terms and conditions as follows:
>
> a. **Term of Option**. This option to purchase the Demised Premises shall commence on the 1st day of April, 2024, and shall expire at midnight on the 30th day of May, 2025.
>
> b. **Exclusivity**. This option to purchase is exclusive to Palmer and non-assignable. Any attempted assignment, delegation, transfer or conveyance of this option to purchase without the City Manager's express written permission is void.
>
> c. **Exercise of Option**. Palmer may only exercise this option to purchase by delivering written notice of intent to purchase to the City Manager. Such notice shall indicate the closing date for the purchase which shall be set prior to May 30, 2025. If Palmer fails to close the purchase prior to May 30, 2025, without unreasonable delay caused by the City, the option shall become void and of no further force or effect.
>
> d. **Option Consideration**. Palmer shall remit option consideration in the amount of **Ninety Thousand and no/100 Dollars ($90,000.00)** on or before March 31, 2024, which amount is non-refundable. In the event that Palmer timely exercises this option, is not in default under the terms of the Lease Agreement, as amended, and the option to purchase has not previously been terminated for default under the terms of the Lease Agreement, as amended, the option consideration shall be credited to the

purchase price at closing. If Palmer fails to exercise this option, defaults on the Lease Agreement, as amended, or fails to close the purchase within the timeframe established herein, the option consideration shall not be refunded and shall be forfeited to the City.

e. **Purchase Price**. The total purchase price for the Demised Premises, subject to the stated credit in subparagraph d. above, shall be the Fair Market Value ("FMV") of the Demised Premises, which shall include the land and improvements located thereon, as determined in the final year of the Lease Agreement, as amended. The FMV shall be established by two (2) MAI appraisers – one shall be selected and paid by the City, and the other by Palmer. The FMV shall be the average of the two appraisals. If the two appraisals vary by more than ten percent (10%), then a third appraiser shall be employed selected by agreement of the two initial appraisers and the average of the two closest appraisals shall be the FMV.

f. **Effect of Default on Purchase Option**. In the event of any default by Palmer of the terms of the purchase option or the Lease Agreement, as amended, City shall have the option to terminate the purchase option by giving written notice of termination to Palmer, in addition to any other remedies available to City at law or in equity. Palmer shall not be entitled to any refund of the option consideration whatsoever. All terms and conditions of the Lease Agreement, as amended, must be complied with in order for this option to be enforceable.

g. **AS-IS Disclosure**. Inasmuch as Palmer has occupied and utilized the Demised Premises continuously for more than fifteen (15) years, and shall have otherwise notified the City of any defect in the Demised Premises, the condition of the Demised Premises shall not be a condition or contingency to this purchase option. City makes no warranty of any type, either express or implied, as to the physical condition of the Demised Premises (including, those improvements located thereon). City has no knowledge as to any uncorrected building or safety code violation. By exercising the purchase option, Palmer agrees to take the Demised Premises "AS-IS". Palmer expressly waives any claims against City for any unknown defects or other damages which may exist or be discovered by Palmer.

h. **Financing Disclaimer**. The parties acknowledge that speculation of availability of financing or assumption of existing loans towards the purchase of the Demised Premises is impossible to predict. Therefore, the parties agree that these items shall not be a condition of performance of this purchase option, and the parties agree they have not relied upon any representation or warranties by either party.

i. **Closing.** In the event that the purchase option is validly exercised, the Standards for Real Estate Transactions set forth on the form contract approved by The Florida Bar and The Florida Association of Realtors, Inc., attached hereto as **Exhibit "A"** shall control. In

the event of a conflict between the terms of this Agreement and the terms contained in **Exhibit "A,"** the terms contained in this Agreement shall control.

(1) **Location**. Closing shall take place in Volusia County, Florida, at a location mutually agreed upon by the parties.

(2) **Costs**. Palmer shall pay all closing costs including, document preparation costs and Florida documentary tax stamps.

(3) **Fees**. Palmer has not utilized the services of a Florida Real Estate Broker for this purchase option. Both parties acknowledge that Palmer shall be responsible for the payment of any brokerage fee incurred for the transfer of the Demised Premises. Palmer shall be responsible for any appraisal reports it order, and fees incurred for independent review of this Agreement.

(4) **Taxes and Assessments**. Palmer agrees to pay before delinquency all taxes and assessments, if any, which may be due currently or may hereafter become due on the Demised Premises until and including the day of closing.

(5) **Title Insurance**. City shall provide to Palmer owner's title insurance.

7. This First Amendment to the Second Addendum to Third Amendment and Restatement of Lease Agreement shall become effective as of the date signed by all Parties.

9. All other terms and conditions of the Lease Agreement, as previously amended, shall remain in full force and effect.

10. This First Amendment to the Second Addendum to Third Amendment and Restatement of Lease Agreement may be executed in one or more counterparts, each of which shall be deemed to be an original but all of which together shall constitute one and the same instrument. The delivery by facsimile of an executed copy of this Second Addendum to Third Amendment of Lease Agreement shall be deemed valid as if an original signature was delivered.

[REMAINDER OF PAGE LEFT BLANK]

IN WITNESS WHEREOF, the Parties hereto have signed, sealed, and delivered this First Amendment to the Second Addendum to Third Amendment and Restatement of Lease Agreement on the day and year stated hereinafter.

LANDLORD:
CITY OF PORT ORANGE, FLORIDA

_____
W*itness*

By:_____
Scott Stiltner, Mayor

_____
Witness

_____
W*itness*

Attest: _____
Robin L. Fenwick, MMC, City Clerk

_____
Witness

Date Signed: _____, 2025

Corporate Seal

STATE OF FLORIDA
COUNTY OF VOLUSIA

The foregoing instrument was acknowledged before me by means of [XX] physical presence or [___] online notarization this _____ day of _____, 2025 by Scott Stiltner, the Mayor, and Robin L. Fenwick, the City Clerk, both duly authorized to execute the foregoing First Amendment to the Second Addendum to Third Amendment and Restatement of Lease Agreement, on behalf of the **CITY OF PORT ORANGE, FLORIDA**, a chartered municipal corporation, and who [___] is personally known to me, or [___] has produced _____ as identification.

(Seal)

_____
Notary Public, State of Florida at Large
Printed name, commission and expiration:

TENANT:
PALMER COLLEGE FOUNDATION, INC., AN IOWA NOT-FOR-PROFIT CORPORATION, D/B/A PALMER COLLEGE OF CHIROPRACTIC, FLORIDA

_____
Witness

By:_____
Print Name: _____
Title: _____

_____
Witness

Date Signed: _____, 2025

Corporate Seal

STATE OF IOWA
COUNTY OF SCOTT

The foregoing instrument was acknowledged before me by means of [XX] physical presence or [___] online notarization this _____ day of _____, 2025, by _____, as _____ of PALMER COLLEGE FOUNDATION, INC., AN IOWA NOT-FOR-PROFIT CORPORATION, D/B/A PALMER COLLEGE OF CHIROPRACTIC, FLORIDA and being duly authorized to execute the foregoing First Amendment to the Second Addendum to Third Amendment and Restatement of Lease Agreement on behalf of Palmer College Foundation, Inc., an Iowa not-for-profit corporation, d/b/a Palmer College of Chiropractic, Florida, and who [___] is personally known to me, or [___] has produced _____ as identification.

_____
Notary Public, State of Iowa at Large
Printed name, commission and expiration:

(Seal)

CITY COUNCIL AGENDA ITEM

COUNCIL MEETING DATE 3/18/2025

SUBJECT: (D6g) Approval of Change Order No. 1 to AIA Agreement with Paul Culver Construction, Inc. for the Police Department HVAC Renovations

DEPARTMENT: Engineering

GOAL: 2 - Infrastructure

RECOMMENDED MOTION: Move to approve Change Order No. 1 to the AIA Agreement with Paul Culver Construction, Inc. for the Police Department HVAC Renovation in the amount of $38,184.95, for a total contract amount not to exceed $916,183.95, to add 83 days to the contract time, and to authorize Mayor and the City Clerk to execute all contract documents.

SUMMARY: The Engineering Department is requesting approval of Change Order No. 1 to the Standard Agreement with Paul Culver Construction, Inc. for the Police Department HVAC Renovation in the amount of $38,184.95 for a revised agreement amount of not to exceed $916,183.95 and to add 83 days to the contract for a Substantial Completion date of May 16, 2025 and a Final Completion date of June 15, 2025.

On May 21, 2024, Council approved the Standard Agreement between the City and Paul Culver Construction, Inc. for the Police Department HVAC Renovation in the amount of $877,999.

Change Order No. 1 is necessary for the purchase and installation of six (6) building exhaust fans. During the testing and balancing phase of the upgraded HVAC system at the Police Department, it was discovered that the building's exhaust fans were non-operational. Building exhaust fans are used in locations such as bathrooms, locker rooms, and the evidence room, and often go unnoticed when they malfunction, which is why the issue was not identified by staff in the building or during the design phase. The exhaust fans are components of the HVAC return air system that help to ensure proper airflow balance throughout the building. The original project scope focused on replacing two chillers and the Variable Air Volume (VAV) controllers on the supply side of the HVAC system. The overall project budget has sufficient funds to cover this request.

Commercial HVAC (Heating, Ventilation, and Air Conditioning) systems like the one at the Police Department are designed to control the climate of large spaces by regulating temperature, humidity, and air quality. They are typically more complex than residential systems due to the larger spaces, multiple zones, and specific requirements for occupant comfort and building performance. Commercial HVAC systems are divided

into the supply side and the return side.

The supply side of the HVAC system is responsible for delivering conditioned air (heated, cooled, or filtered) to the building's interior. The process typically involves the following components:

- Air Handling Unit (AHU)
- Ductwork
- Supply Registers or Diffusers
- Variable Air Volume (VAV) Controllers

The return system is responsible for collecting the air from the building after it has been circulated and delivering it back to the HVAC unit for reconditioning or exhausting it outside. Key components of the return system include:

- Return Registers or Grilles
- Return Ductwork
- Exhaust Fans
- Air Filtration

A well-balanced commercial HVAC system requires equilibrium between the amount of air being supplied and the amount being returned. If too much air is supplied without adequate return, it can lead to positive pressure, forcing air out through leaks or cracks. Conversely, too much return air creates negative pressure, drawing in unconditioned air from outside, reducing efficiency.

PRESENTER: Junos Reed

ATTACHMENTS:

1.	Paul Culver Construction, Inc. Change Order No 1 - PD HVAC	Paul Culver Construction, Inc. Change Order No 1 - PD HVAC.pdf
2.	Port Orange Police Dept_HVAC Renovations_Change Order #01_01.23.2025	Port Orange Police Dept_HVAC Renovations_Change Order #01_01.23.2025.pdf
3.	Executed Notice to Proceed	Executed Notice to Proceed.pdf
4.	EXECUTED Paul Culver Constructio, Inc. ITB 24-08 PD HVAC Renovation	EXECUTED Paul Culver Constructio, Inc. ITB 24-08 PD HVAC Renovation.pdf
5.	Paul Culver Construction Inc. Payment and Performance Bond ITB #24-08 HVAC Renovation	Paul Culver Construction Inc. Payment and Performance Bond ITB #24-08 HVAC Renovation.pdf
6.	Paul Culver Const - Human Trafficking Affidavit 9.24.2024	Paul Culver Const - Human Trafficking Affidavit 9.24.2024.pdf
7.	Paul Culver Construction, Inc. ITB 24-08 All 2.10.2025	Paul Culver Construction, Inc. ITB 24-08 All 2.10.2025.pdf

Julia Wiggins — Created/Initiated - 1/31/2025
Richard Colby — Approved - 1/31/2025

Junos Reed	Approved - 2/10/2025
Linda Truitt	Approved - 2/11/2025
Matthew Jones	Approved - 3/7/2025
Wayne Clark	Final Approval - 3/7/2025

CHANGE ORDER NO. 1
To the Standard Agreement (AIA), Dated May 21, 2024
PAUL CULVER CONSTRUCTION, INC., Contractor

Project: ITB 24-08 Police Department HVAC Renovation

The following changes are hereby made to the Contract Documents:

CHANGE IN CONTRACT PRICE:	**CHANGE IN CONTRACT TIMES**:
Original Contract Price: $877,999.00 *Contact amount includes a permit allowance of $10,000.00 and $30,000.00 unforeseen conditions.	Original Contract Times: Notice to Proceed (NTP) Issued: August 26, 2024 Substantial Completion: 180 days from issuance of NTP: February 22, 2025 Final Completion 210 days from issuance of NTP: March 24, 2025
Net changes from previous Change Order: N/A	Changes in contract time from previous Change Orders: N/A
Contract Price prior to this Change Order: $877,999.00	Contract Completion Date prior to this Change Order: Substantial Completion: February 22, 2025 Final Completion: March 24, 2025
Net Increase (decrease) of this Change Order: No. 1: $38,184.95	Changes in contract time requested this Change Order: 83 days
Contract Price with all approved Change Orders: $916,183.95	Contract Times with all approved Change Orders: Substantial Completion: May 16, 2025 Final Completion: June 15, 2025

CHANGES ORDERED:

I. GENERAL: This Change Order is necessary to cover changes in the work to be performed under the AIA Agreement entered into by and between the parties on May 21, 2024.

II. REQUIRED CHANGES: Change Order is necessary for the purchase and installation of six (6) exhaust fans. The addition of 83 days, changing the substantial completion date to May 16, 2025, with a final completion date of June 15, 2025 . No goods shall be delivered, nor services commenced hereunder until this Change Order has been fully executed by all parties.

III. JUSTIFICATION: In order to complete the project, an increase in pricing and contract time is required for the above specified changes. The above changes to the AIA Agreement does not require a change in scope.

IV. PAYMENT: Payment for this Change Order shall be made in accordance with the terms of the AIA Agreement subject to a limit not to exceed $38,184.95, a total project amount of $916,183.95. All payments shall be governed by the Local Government Prompt Payment Act as set forth in Florida Statutes Section 218.70 through 218.79, as amended.

V. This Change Order may be executed in one or more counterparts, each of which shall be deemed to be an original but all of which together shall constitute one and the same instrument. The delivery by facsimile or e-mail of an executed copy of this Change Order shall be deemed valid as if an original signature was delivered. No contract shall be formed between the Contractor and the City until the City signs this Change Order.

Acknowledgments:

The aforementioned change, and work affected thereby, is subject to all provisions of the original contract not specifically changed by this Change Order;

It is expressly understood and agreed that the approval of the Change Order shall have no effect on the original contract other than matters expressly provided herein;

The prices quoted are fair and reasonable and in proper ratio to the cost of the original work contracted for under competitive bidding; and,

The change in price and/or delivery date described is considered to be fair and reasonable and has been mutually agreed upon in full agreement and final settlement of all claims arising out of this modification including all claims for delays and disruptions resulting from, caused by, or incident to such modifications and change orders.

RECOMMENDED BY:
RICHARD COLBY
Construction Manager

By:_____
Richard Colby, Construction Manager

Date Signed:_____

ACCEPTED BY:
PAUL CULVER
Paul Culver Construction, Inc.

By:_____
Paul Culver, President

Date Signed:_____

RECOMMENDED BY:
N/A
City's Representative

By:_____
Printed Name:_____
Title:_____

Date Signed:_____

RECOMMENDED BY:
N/A
Engineer of Record

By:_____
Printed Name:_____
Title:_____

Date Signed:_____

APPROVED BY:
CITY OF PORT ORANGE
Department Head

By:_____
Junos Reed, City Engineer

Date Signed:_____

City Manager

By:_____
Wayne Clark, City Manager

Date Signed:_____

If Council approval is required:

Affirmed:

By:_____
Scott Stiltner, Mayor

_____
Robin L. Fenwick, MMC, City Clerk

Date Signed:_____

Date Signed:_____

PAUL CULVER CONSTRUCTION, INC.

CHANGE ORDER

Change Order not valid until signed by Contractor and Owner

Project: **ITB #24-08**
PORT ORANGE POLICE DEPARTMENT HVAC RENOVATIONS

Change Order No. 1
Date: 01/23/25
Contract Date: 05/21/24

Contractor:
Paul Culver Construction, Inc.
1301 Beville Rd. - Suite #6
Dayton Beach, FL 32119

The Contract is Changed as Follows to incorporate the following additional Electrical Work as required:

1. Replace (6) Exhaust Fans (EF - 1, 6, 7, 8, 11 & 12) using existing roof curbs, including crane and Controls by ABC **(DG MEYER)**.	$	24,425.00
2. 5- Day Quick Build option for EF's **(DG MEYER).**	$	1,500.00
3. Demo & remove (2) 3-Phase, 3-Pole Combination Starters for (6) for EF **(CARTER ELECTRIC).**	$	8,383.75
4. Provide & install (2) 3 Phase, 3 Pole Combination Starter for EF **(CARTER ELECTRIC).**		
5. Demo and remove (2) Relays for EF **(CARTER ELECTRIC).**		
6. Provide & install (2) new Relays fo EF **(CARTER ELECTRIC).**		
7. Demo and remove (2) Disconnects from EF's **(CARTER ELECTRIC).**		
8. Provide & install (2) new Disconnects for EF's **(CARTER ELECTRIC).**		
9. Provide (2) weeks of additional Supervision at $1,680/week required to complete change out **(PCC).**	$	3,360.00

Sub-Total:	$	34,308.75
10% Overhead & Profit:	$	3,430.88
Sub-Total:	$	37,739.63
Bond increase:	$	445.33
Grand Total:	$	38,184.95

The Original Contract Sum was $877,999.00

Net Change by Previously authorized Change Orders

The Contract Sum prior to this Change Order was $877,999.00

The Contract Sum will be ☑ INCREASED ☐ DECREASED ☐ UNCHANGED $38,184.95

The new Contract Sum including this Change Order will be $916,183.95

The Contract Time will be ☑ INCREASED ☐ DECREASED ☐ UNCHANGED 0 DAYS

Contractor:
Paul Culver Construction, Inc.
1301 Beville Rd. - Suite #6
Daytona Beach, FL 32119
By: Paul Culver *Paul K. Culver*
Date: 01/23/2025

Architect:
Schenkel Shultz
200 E. Robinson Street
Orlando, FL 32801

Owner:
City of Port Orange
1000 City Center Circle
Port Orange, FL 32129
By:
Date:

End of Change Order

To be completed by the Project Manager

PM: ☑ Project Manager recommends approval
Kevin B. Flynn - Project Manager
Date: Thursday, January 23, 2025

AIR CONDITIONING · HEAT
SHEET METAL · ELECTRICAL
P.O. Drawer 730008 · Ormond Beach, Florida 32173-0008
West Volusia 386-738-3888 · Flagler 386-446-8658
Daytona 386-253-7774 · Fax 386-255-9431
www.dgmeyer.com
Fla. St. License · #CM CO57027 · #CM C1250907 ·
Ga. St. License #CN 007951 · Electrical License #EC 13005098

ADDITIONAL WORK AUTHORIZATION

Is hereby Authorized By:
E-Mail: _____

Contractor/Sub Contractor- Paul Culver Construction	**PHONE- 386-763-4190**	**DATE- 1/15/25**
STREET- 201 Osceola Ave	**JOB NAME- Port Orange Police Renovation**	**JOB NUMBER- 6769**
CITY- Daytona Beach	**STATE- Florida**	**STREET- 4545 Clyde Morris Blvd**

EXISTING CONTRACT NO.-	**DATE OF EXISTING CONTRACT-**	**CITY- Port Orange**	**STATE- ZIP FL 32129**

TO PERFORM THE FOLLOWING SPECIFICALLY DESCRIBED ADDITIONAL WORK:

Replace (6) exhaust fans (EF- 1,6,7,9,11,12) using existing roof curbs. Includes crane and controls by ABC. 6 week lead time.

ADD- $24,425.00

5-day quick build option for exhaust fans.

ADD $1,500.00

Excludes: Test and balance on exhaust fans, electrical by others, exhaust duct, louvers, dampers/actuators.

Payment will be made as follows: As Original/Proposal

Date_____, 2025

Authorized Signature_____
Contractor/Sub-Contractor signature

We hereby agree to furnish labor and materials-complete in accordance with the above specifications, at above stated price. I, the undersigned, have the authority to make this change in our contract.

Authorized Signature: _Steven Longfritz_____ _Date: ____1/15/2025_____,
STEVEN LONGFRITZ -CM C1250907- D.G. Meyer, Inc. Representative Signature

THIS IS CHANGE ORDER NO.___2_____
NOTE: This Revision becomes part of, and in conformance with, the existing contract.

arter electric company, inc. contractors — engineers
231 JEAN STREET • DAYTONA BEACH, FLORIDA 32114-4197
TELEPHONE: 386/255-1418
FAX: 386/255-3429
www.carterelectric.com
EC0000265
EC0002058

PROPOSED CHANGE NOTICE

Client Address:
Carter Electric Co., Inc.
231 Jean Street
Daytona Beach, Florida 32114
Paul Culver Construction, inc.
Contact: Kevin Flynn
201 Osceola Avenue
Daytona Beach, Florida 32114

CCN #	**CO 4**
Date:	1/21/2025
Project Name:	Port Orange Police Statio
Project Number:	1842
Page Number:	1

Work Description

A. BRIEF DESCRIPTION OF THE WORK
1. Demo and remove two (2) 3 Phase, 3 Pole Combination Starter for EF.
2. Provide and install new Two (2) 3 Phase, 3 Pole Combinstation Starter for EF.
3. Demo and remove Two (2) Relays for EF.
4. Provide and install Two (2) Relays for EF.
5. Demo and remove Two (2) Disconnect switches from EF's
6. Provide and install Two (2) Disconnect switches for EF's.

. NOTE: THIS ELECTRICAL PROPOSAL IS BASED ON ACTUAL MATERIAL QUANTITIES AS DETAILED BELOW.

B. ITEMS INCLUDED IN PROPOSAL ARE AS FOLLOWS:
1. State sales tax on material and equipment costs.
2. Project Supervision.
3. Rental Equipment Cost.
4. Personal Protective Equipment for our employees.

C. EXCLUDED ITEMS FROM THIS PROPOSAL ARE AS FOLLOWS:
1. Painting
2. Cutting of floors, walls, and/or ceilings.
3. Patching of floors walls and/or ceilings.
4. Premium time, weekends, holidays, and overtime.
5. Additional permit fees.
6. Engineering fees.

D. TERMS:
1. We reserve the right to correct this quote for errors and omissions.
2. This quote is good for acceptance within 7 days from the date of noted above.
    i. DUE TO CURRENT MARKET CONDITIONS.
3. We request a time extension of ( ) additional days to complete this additional work.
    i. Additional time exstension starts upon receipt of necessary materials.

Itemized Breakdown

Description	Qty	Total Mat.	Total Hrs.
3/4" FLEX - LIQUIDTIGHT NON-METALLIC - TYPE B	10	66.18	0.65
3/4" CONN STRAIGHT - LIQUIDTIGHT NYLON	4	120.04	0.39
#12 THHN BLACK	60	131.49	0.39

ORIGINAL

PROPOSED CHANGE NOTICE

Carter Electric Co., Inc.
231 Jean Street
Daytona Beach, Florida 32114

Client Address:

Paul Culver Construction, inc.
201 Osceola Avenue
Daytona Beach, Florida 32114

CCN # CO 4
Date: 1/21/2025
Project Name: Port Orange Police Statio
Project Number: 1842
Page Number: 2

Description	Qty	Total Mat.	Total Hrs.
COMB STARTER SIZE 2 FUS - NEMA 1	2	0.00	10.00
2P 600V GP CTRL RELAY - OPEN	2	0.00	1.26
30A 250V DSN SW FUSIBLE - NEMA 3R	2	334.00	2.50
20A FUSE 250V TIME DELAY CLASS RK5	4	94.76	0.16
DEMO STARTER SIZE 2 3PH COMB	2	0.00	5.00
Totals	**86**	**746.47**	**20.35**

Summary

General Materials		746.47
General Materials Adjustment		111.97
DISTRIBUTION		4,953.53
Material Tax	(@ 6.500 %)	377.78
Total Material		**6,189.75**
ELECTRICIAN	(10.18 Hrs @ $50.00)	509.00
FOREMAN	(10.18 Hrs @ $55.00)	559.90
Subtotal		**7,258.65**
Overhead	(@ 10.000 %)	725.87
Markup	(@ 5.000 %)	399.23
Subtotal		**8,383.75**
Final Amount		**$8,383.75**

CONTRACTOR CERTIFICATION

Name: _____

Date: _____

Signature: _____

I hereby certify that this quotation is complete and accurate based on the information provided.

CLIENT ACCEPTANCE

CCN # CO 4
Final Amount: $8,383.75

Name: _____

Date: _____

Signature: _____

Change Order #: _____

I hereby accept this quotation and authorize the contractor to complete the above described work.

ORIGINAL

PROPOSED CHANGE NOTICE

Carter Electric Co., Inc.
231 Jean Street
Daytona Beach, Florida 32114

Client Address:

Paul Culver Construction, inc.
201 Osceola Avenue
Daytona Beach, Florida 32114

CCN #	**CO 4**
Date:	1/21/2025
Project Name:	Port Orange Police Stati
Project Number:	1842
Page Number:	3

Work Description

ORIGINAL

CITY OF PORT ORANGE
NOTICE TO PROCEED

Issued By: **Junos Reed, City Engineer**
Engineering Department
1395 Dunlawton Avenue
Port Orange, FL 32129
Ph:(386) 506-5751
jwiggins@port-orange.org

Issued To: **Paul Culver Construction, Inc**
201 Osceola Avenue
Daytona Beach, FL 32114

PROJECT TITLE: **ITB 24-08 - Police Department HVAC Renovation**
Project BM241(OBI202) (PO-20240056)

This **Notice to Proceed** issued to your company is for the above referenced project and in accordance with ITB 24-08 Police Department HVAC Renovation AIA Agreement CA8432 (240019), and all terms and conditions of the agreement between the City of Port Orange and **Paul Culver Construction, Inc.** The **effective date** of this **Notice to Proceed** is **August 26, 2024,** for **Substantial Completion** by **May 16, 2025 and Final Completion by July 1, 2025.**

Please sign below acknowledging and agreeing to the contents of this Notice to Proceed and return a copy of this form to Julia Wiggins, Engineering Business Manager via email jwiggins@port-orange.org.

Project Manager: Junos Reed, City Engineer

All future correspondence or requests for changes to the contract must be addressed to City Engineer

---

ISSUED BY:

Owner: City of Port Orange

This 21 day of August, 2024

By: _____
Junos Reed

Title: City Engineer

ACCEPTANCE NOTICE:

Receipt of the foregoing Notice to Proceed is hereby acknowledged and agreed by:

Company: Paul Culver Construction, Inc.

This 20TH day of AUGUST, 2024

By: _____
Paul K. Culver

Title: ~~President~~ PROJECT MANAGER

AIA® Document A101® – 2017

Standard Form of Agreement Between Owner and Contractor *where the basis of payment is a Stipulated Sum*

AGREEMENT made as of the day of in the year 2024

BETWEEN the Owner:

City of Port Orange, a Florida Municipal Corporation
1000 City Center Circle Port Orange, Florida 32129
(386) 506-5575

and the Contractor:

Paul Culver Construction, Inc,
201 Osceola Avenue
Daytona Beach, Florida 32124

for the following Project:

ITB 24-08 Police Department HVAC Renovation

The Architect:

Schenkel & Shultz, Inc.
200 East Robinson Street
Suite 300
Orlando, Florida 32801

The Owner and Contractor agree as follows.

ADDITIONS AND DELETIONS:
The author of this document has added information needed for its completion. The author may also have revised the text of the original AIA standard form. An *Additions and Deletions Report* that notes added information as well as revisions to the standard form text is available from the author and should be reviewed. A vertical line in the left margin of this document indicates where the author has added necessary information and where the author has added to or deleted from the original AIA text.

This document has important legal consequences. Consultation with an attorney is encouraged with respect to its completion or modification.

The parties should complete A101®–2017, Exhibit A, Insurance and Bonds, contemporaneously with this Agreement. AIA Document A201®–2017, General Conditions of the Contract for Construction, is adopted in this document by reference. Do not use with other general conditions unless this document is modified.

Init.
/

AIA Document A101 – 2017. Copyright © 1915, 1918, 1925, 1937, 1951, 1958, 1961, 1963, 1967, 1974, 1977, 1987, 1991, 1997, 2007 and 2017. All rights reserved. "The American Institute of Architects," "American Institute of Architects," "AIA," the AIA Logo, and "AIA Contract Documents" are trademarks of The American Institute of Architects. This document was produced at 15:33:22 ET on 05/08/2024 under Order No.2114457573 which expires on 07/31/2024, is not for resale, is licensed for one-time use only, and may only be used in accordance with the AIA Contract Documents® Terms of Service. To report copyright violations, e-mail docinfo@aiacontracts.com.
User Notes: (1413630004)

TABLE OF ARTICLES

1 THE CONTRACT DOCUMENTS

2 THE WORK OF THIS CONTRACT

3 DATE OF COMMENCEMENT AND SUBSTANTIAL COMPLETION

4 CONTRACT SUM

5 PAYMENTS

6 DISPUTE RESOLUTION

7 TERMINATION OR SUSPENSION

8 MISCELLANEOUS PROVISIONS

9 ENUMERATION OF CONTRACT DOCUMENTS

EXHIBIT A INSURANCE AND BONDS

ARTICLE 1 THE CONTRACT DOCUMENTS

The Contract Documents consist of this Agreement, Conditions of the Contract (General, Supplementary, and other Conditions), Drawings, Specifications, Addenda issued prior to execution of this Agreement, other documents listed in this Agreement, and Modifications issued after execution of this Agreement, all of which form the Contract, and are as fully a part of the Contract as if attached to this Agreement or repeated herein. The Contract represents the entire and integrated agreement between the parties hereto and supersedes prior negotiations, representations, or agreements, either written or oral. An enumeration of the Contract Documents, other than a Modification, appears in Article 9.

ARTICLE 2 THE WORK OF THIS CONTRACT

The Contractor shall fully execute the Work described in the Contract Documents, except as specifically indicated in the Contract Documents to be the responsibility of others.

ARTICLE 3 DATE OF COMMENCEMENT AND SUBSTANTIAL COMPLETION

§ 3.1 The date of commencement of the Work shall be:

[ ] The date of this Agreement.

[X] A date set forth in a notice to proceed issued by the Owner.

[ ] Established as follows:

If a date of commencement of the Work is not selected, then the date of commencement shall be the date of this Agreement.

§ 3.2 The Contract Time shall be measured from the date of commencement of the Work.

§ 3.3 Substantial Completion

§ 3.3.1 Subject to adjustments of the Contract Time as provided in the Contract Documents, the Contractor shall achieve Substantial Completion of the entire Work:

AIA Document A101 – 2017. Copyright © 1915, 1918, 1925, 1937, 1951, 1958, 1961, 1963, 1967, 1974, 1977, 1987, 1991, 1997, 2007 and 2017. All rights reserved. "The American Institute of Architects," "American Institute of Architects," "AIA," the AIA Logo, and "AIA Contract Documents" are trademarks of The American Institute of Architects. This document was produced at 15:33:22 ET on 05/08/2024 under Order No.2114457573 which expires on 07/31/2024, is not for resale, is licensed for one-time use only, and may only be used in accordance with the AIA Contract Documents® Terms of Service. To report copyright violations, e-mail docinfo@aiacontracts.com.
User Notes: (1413630004)

[ ] Not later than ( ) calendar days from the date of commencement of the Work.

[X] By the following date: Contractor shall achieve Substantial Completion of the work not later than 180 days from the issuance of a written Notice to Proceed issued by the City, with final completion 30 days thereafter.

§ 3.3.2 Subject to adjustments of the Contract Time as provided in the Contract Documents, if portions of the Work are to be completed prior to Substantial Completion of the entire Work, the Contractor shall achieve Substantial Completion of such portions by the following dates:

Portion of Work	Substantial Completion Date
N/A	N/A

§ 3.3.3 If the Contractor fails to achieve Substantial Completion as provided in this Section 3.3, liquidated damages, if any, shall be assessed as set forth in Section 4.5.

ARTICLE 4 CONTRACT SUM

§ 4.1 The Owner shall pay the Contractor the Contract Sum in current funds for the Contractor's performance of the Contract. The Contract Sum shall be Eight Hundred Seventy-Seven Thousand Nine Hundred Ninety-Nine and 00/100 Dollars ($877,999.00), subject to additions and deductions as provided in the Contract Documents.

§ 4.2 Alternates

§ 4.2.1 Alternates, if any, included in the Contract Sum:

Item	Price
N/A	N/A

§ 4.2.2 Subject to the conditions noted below, the following alternates may be accepted by the Owner following execution of this Agreement. Upon acceptance, the Owner shall issue a Modification to this Agreement.

Item	Price	Conditions for Acceptance
N/A	N/A	N/A

§ 4.3 Allowances, if any, included in the Contract Sum:

Item	Price
N/A	N/A

§ 4.4 Unit prices, if any:

Item	Units and Limitations	Price per Unit ($0.00)
N/A	N/A	N/A

§ 4.5 Liquidated damages, if any:

0.00 per day.

§ 4.6 Other:
(Paragraph deleted)

AIA Document A101 – 2017. Copyright © 1915, 1918, 1925, 1937, 1951, 1958, 1961, 1963, 1967, 1974, 1977, 1987, 1991, 1997, 2007 and 2017. All rights reserved. "The American Institute of Architects," "American Institute of Architects," "AIA," the AIA Logo, and "AIA Contract Documents" are trademarks of The American Institute of Architects. This document was produced at 15:33:22 ET on 05/08/2024 under Order No.2114457573 which expires on 07/31/2024, is not for resale, is licensed for one-time use only, and may only be used in accordance with the AIA Contract Documents® Terms of Service. To report copyright violations, e-mail docinfo@aiacontracts.com.
User Notes:
(1413630004)

ARTICLE 5 PAYMENTS

§ 5.1 Progress Payments

§ 5.1.1 Based upon Applications for Payment submitted to the Architect by the Contractor and Certificates for Payment issued by the Architect, the Owner shall make progress payments on account of the Contract Sum to the Contractor as provided below and elsewhere in the Contract Documents.

§ 5.1.2 The period covered by each Application for Payment shall be one calendar month ending on the last day of the month, or as follows:

§ 5.1.3 Provided that an Application for Payment is received by the Architect not later than the 1st day of a month, and the Contractor obtains Architect's certification of the application for payment within 10 days thereafter, then the Owner shall make payment of the amount certified to the Contractor not later than the 10th day of the following month. If an Application for Payment is received by the Architect after the application date fixed above, and the Contractor obtains Architect's certification of the application for payment within 10 days thereafter, then payment of the amount certified shall be made by the Owner not later than 30 days after the Architect receives the Application for Payment.

§ 5.1.4 Each Application for Payment shall be based on the most recent schedule of values submitted by the Contractor in accordance with the Contract Documents. The schedule of values shall allocate the entire Contract Sum among the various portions of the Work. The schedule of values shall be prepared in such form, and supported by such data to substantiate its accuracy, as the Architect may require. This schedule, unless objected to by the Architect, shall be used as a basis for reviewing the Contractor's Applications for Payment.

§ 5.1.5 Applications for Payment shall show the percentage of completion of each portion of the Work as of the end of the period covered by the Application for Payment.

§ 5.1.6 In accordance with AIA Document A201™–2017, General Conditions of the Contract for Construction, and subject to other provisions of the Contract Documents, the amount of each progress payment shall be computed as follows:

§ 5.1.6.1 The amount of each progress payment shall first include:

.1 That portion of the Contract Sum properly allocable to completed Work;

.2 That portion of the Contract Sum properly allocable to materials and equipment delivered and suitably stored at the site for subsequent incorporation in the completed construction, or, if approved in advance by the Owner, suitably stored off the site at a location agreed upon in writing; and

.3 That portion of Construction Change Directives that the Architect determines, in the Architect's professional judgment, to be reasonably justified.

§ 5.1.6.2 The amount of each progress payment shall then be reduced by:

.1 The aggregate of any amounts previously paid by the Owner;

.2 The amount, if any, for Work that remains uncorrected and for which the Architect has previously withheld a Certificate for Payment as provided in Article 9 of AIA Document A201–2017;

.3 Any amount for which the Contractor does not intend to pay a Subcontractor or material supplier, unless the Work has been performed by others the Contractor intends to pay;

.4 For Work performed or defects discovered since the last payment application, any amount for which the Architect may withhold payment, or nullify a Certificate of Payment in whole or in part, as provided in Article 9 of AIA Document A201–2017; and

.5 Retainage withheld pursuant to Section 5.1.7.

§ 5.1.7 Retainage

§ 5.1.7.1 For each progress payment made prior to Substantial Completion of the Work, the Owner may withhold the following amount, as retainage, from the payment otherwise due:

AIA Document A101 – 2017. Copyright © 1915, 1918, 1925, 1937, 1951, 1958, 1961, 1963, 1967, 1974, 1977, 1987, 1991, 1997, 2007 and 2017. All rights reserved. "The American Institute of Architects," "American Institute of Architects," "AIA," the AIA Logo, and "AIA Contract Documents" are trademarks of The American Institute of Architects. This document was produced at 15:33:22 ET on 05/08/2024 under Order No.2114457573 which expires on 07/31/2024, is not for resale, is licensed for one-time use only, and may only be used in accordance with the AIA Contract Documents® Terms of Service. To report copyright violations, e-mail docinfo@aiacontracts.com.
User Notes: (1413630004)

§ 5.1.7.1.1 The following items are not subject to retainage:

§ 5.1.7.2 Reduction or limitation of retainage, if any, shall be as follows:

No reduction of retainage below five percent (5%).

§ 5.1.7.3

Deleted in its entirety.

§ 5.1.8 If final completion of the Work is materially delayed through no fault of the Contractor, the Owner shall pay the Contractor any additional amounts in accordance with Article 9 of AIA Document A201–2017.

§ 5.1.9 Except with the Owner's prior approval, the Contractor shall not make advance payments to suppliers for materials or equipment which have not been delivered and stored at the site.

§ 5.2 Final Payment

§ 5.2.1 Final payment, constituting the entire unpaid balance of the Contract Sum, shall be made by the Owner to the Contractor when

.1 the Contractor has fully performed the Contract except for the Contractor's responsibility to correct Work as provided in Article 12 of AIA Document A201–2017, and to satisfy other requirements, if any, which extend beyond final payment; and

.2 a final Certificate for Payment has been issued by the Architect.

§ 5.2.2 The Owner's final payment to the Contractor shall be made no later than 30 days after the issuance of the Architect's final Certificate for Payment, or as follows:

§ 5.3 Interest

Payments due and unpaid under the Contract shall bear interest from the date payment is due at the rate stated below, or in the absence thereof, at the legal rate prevailing from time to time at the place where the Project is located.
All payments shall be governed by the Local Government Prompt Payment Act as set forth in Sections 218.70 through 218.79, Florida Statutes, as amended.

ARTICLE 6 DISPUTE RESOLUTION

§ 6.1 Initial Decision Maker

The Architect will serve as the Initial Decision Maker pursuant to Article 15 of AIA Document A201–2017, unless the parties appoint below another individual, not a party to this Agreement, to serve as the Initial Decision Maker.
(Paragraphs deleted)
Architect's actions, subject to recommendation to Owner, and Owner approval prior to action.

§ 6.2 Binding Dispute Resolution

For any Claim subject to, but not resolved by, mediation pursuant to Article 15 of AIA Document A201–2017, the method of binding dispute resolution shall be as follows:

[ ] Arbitration pursuant to Section 15.4 of AIA Document A201–2017

[X] Litigation in a court of competent

(Paragraphs deleted)

AIA Document A101 – 2017. Copyright © 1915, 1918, 1925, 1937, 1951, 1958, 1961, 1963, 1967, 1974, 1977, 1987, 1991, 1997, 2007 and 2017. All rights reserved. "The American Institute of Architects," "American Institute of Architects," "AIA," the AIA Logo, and "AIA Contract Documents" are trademarks of The American Institute of Architects. This document was produced at 15:33:22 ET on 05/08/2024 under Order No.2114457573 which expires on 07/31/2024, is not for resale, is licensed for one-time use only, and may only be used in accordance with the AIA Contract Documents® Terms of Service. To report copyright violations, e-mail docinfo@aiacontracts.com.
User Notes: (1413630004)

jurisdiction. If the Owner and Contractor do not select a method of binding dispute resolution, or do not subsequently agree in writing to a binding dispute resolution method other than litigation, Claims shall be resolved by litigation, and shall have its venue located exclusively in the Circuit Court of Volusia County, Florida, and the Parties hereby expressly consent and submit themselves to the personal jurisdiction and venue of the Court.

ARTICLE 7 TERMINATION OR SUSPENSION

§ 7.1 The Contract may be terminated by the Owner or the Contractor as provided in Article 14 of AIA Document A201–2017, as modified by Owner.

§ 7.1.1 If the Contract is terminated for the Owner's convenience in accordance with Article 14 of AIA Document A201–2017, then the Owner shall pay the Contractor a termination fee as follows:

§ 7.2 The Work may be suspended by the Owner as provided in Article 14 of AIA Document A201–2017, as modified by the Owner.

ARTICLE 8 MISCELLANEOUS PROVISIONS

§ 8.1 Where reference is made in this Agreement to a provision of AIA Document A201–2017 or another Contract Document, the reference refers to that provision as amended or supplemented by other provisions of the Contract Documents.

§ 8.2 The Owner's representative:

Junos Reed, City Engineer
1000 City Center Circle
Port Orange, Florida 32129
jureed@port-orange.org
(386) 506-5751

§ 8.3 The Contractor's representative:

Paul Culver Construction, Inc.
201 Osceola Road
Daytona Beach, Florida 32124
paul@paulculverconstruction.com
(386) 763-4190

§ 8.4 Neither the Owner's nor the Contractor's representative shall be changed without ten days' prior notice to the other party.

§ 8.5 Insurance and Bonds

§ 8.5.1 The Owner and the Contractor shall purchase and maintain insurance as set forth in AIA Document A101™–2017, Standard Form of Agreement Between Owner and Contractor where the basis of payment is a Stipulated Sum, Exhibit A, Insurance and Bonds, and elsewhere in the Contract Documents.

§ 8.5.2 The Contractor shall provide bonds as set forth in AIA Document A101™–2017 Exhibit A, and elsewhere in the Contract Documents.

AIA Document A101 – 2017. Copyright © 1915, 1918, 1925, 1937, 1951, 1958, 1961, 1963, 1967, 1974, 1977, 1987, 1991, 1997, 2007 and 2017. All rights reserved. "The American Institute of Architects," "American Institute of Architects," "AIA," the AIA Logo, and "AIA Contract Documents" are trademarks of The American Institute of Architects. This document was produced at 15:33:22 ET on 05/08/2024 under Order No.2114457573 which expires on 07/31/2024, is not for resale, is licensed for one-time use only, and may only be used in accordance with the AIA Contract Documents® Terms of Service. To report copyright violations, e-mail docinfo@aiacontracts.com.
User Notes: (1413630004)

§ 8.6 Notice in electronic format, pursuant to Article 1 of AIA Document A201–2017, may be given in accordance with AIA Document E203™–2013, Building Information Modeling and Digital Data Exhibit, if completed, or as otherwise set forth below:

§ 8.7 Other provisions:

§8.7.1 PUBLIC RECORD COMPLIANCE Contractor shall comply with public records laws as set forth in Section 119, Florida Statutes, and shall specifically: (a) keep and maintain public records that ordinarily and necessarily would be required by the City in order to perform the service; (b) provide the public with access to public records on the same terms and conditions that the City would provide the records at a cost that does not exceed the cost provided in Section 119, Florida Statutes, or as otherwise provided by law; (c) ensure that public records that are exempt or confidential and exempt from public records disclosure requirements are not disclosed except as authorized by law; and (d) meet all requirements for retaining public records and transfer to the City, at no cost, all public records in possession of the Contractor upon termination of the Contract and destroy any duplicate public records that are exempt or confidential and exempt from public records disclosure requirements. All records stored electronically must be provided to the City in a format that is compatible with the information technology systems of the City.

§ 8.7.2 RECORDS
The design, permits and all other records prepared by the Contractor, assembled for the City, subcontracted for the City, and any other records related to the scope of work in the possession of the Contractor shall be retained by the Contractor for the requisite time set forth in Florida Administration Code Rule 1 b-24
http://dos.myflorida.com/library-archives/records-management/. Contractor may dispose of the records in accordance with Florida law, upon receipt of a signed written release signed by the City Attorney. Contractor agrees to indemnify the City for failure to comply with the requirements of this paragraph including costs of litigation and legal fees incurred through all appeals. City reserves the right to select and approve the defense attorney.

§ 8.7.3 FORCE MAJEURE
Neither party shall be liable for any delay in performance or failure to perform any obligation hereunder if, and to the extent that, such failure or delay is caused by an event of Force Majeure. Force Majeure shall mean any act, event or condition that is beyond the party's reasonable control, that materially and adversely affects the party's ability to perform its obligations hereunder, and that is not the result of the party's willful neglect, error, omission or failure to exercise reasonable due diligence.

§ 8.7.4 CONTRACT CONSTRUCTION
This Contract may be executed in one or more counterparts, each of which shall be deemed an original but all of which together constitute one and the same instrument. The delivery by facsimile or e-mail of an executed copy of this Contract shall be deemed valid as if an original signature was delivered. No contract shall be formed between the Contractor and the City until both Parties have signed this Contract.

§ 8.7.5 FINANCIAL DISCLOSURES
During the term of this Contract, Contractor covenants and agrees that it will keep adequate books and records of accounts in accordance with Generally Accepted Accounting Principles (GAAP). Contractor further covenants and agrees that in the event the Contractor becomes insolvent and/or fails to pay its current obligations when they become due, Contractor shall so advise Owner of such situation and, upon request from the Owner, Contractor shall provide to Owner financial statements of Contractor, including current income and expense statements of Contractor, consolidated balance sheets signed by a financial officer of Contractor, and audited reports provided by Contractor to Contractor's Surety, audited financial statements certified by a Certified Public Accountant concerning the financial affairs of the Contractor and all affiliates of Contractor, and such other financial information requested by Owner. All such financial information shall comply with GAAP.

In the event that Contractor becomes insolvent and/or fails to pay its obligations when they become due, Contractor hereby authorized its sureties, lenders, financial institutions and other third parties to release Owner financial information requested by Owner, including, but not limited to, the financial information described in the preceding paragraph.

§ 8.7.6 WAIVER OF JURY TRIAL
All parties hereby waive any and all right to any trial by jury in any action or proceeding arising directly or indirectly hereunder.

Init.
/
AIA Document A101 – 2017. Copyright © 1915, 1918, 1925, 1937, 1951, 1958, 1961, 1963, 1967, 1974, 1977, 1987, 1991, 1997, 2007 and 2017. All rights reserved. "The American Institute of Architects," "American Institute of Architects," "AIA," the AIA Logo, and "AIA Contract Documents" are trademarks of The American Institute of Architects. This document was produced at 15:33:22 ET on 05/08/2024 under Order No.2114457573 which expires on 07/31/2024, is not for resale, is licensed for one-time use only, and may only be used in accordance with the AIA Contract Documents® Terms of Service. To report copyright violations, e-mail docinfo@aiacontracts.com.
User Notes: (1413630004)

ARTICLE 9 ENUMERATION OF CONTRACT DOCUMENTS

§ 9.1 This Agreement is comprised of the following documents:

.1 AIA Document A101™–2017, Standard Form of Agreement Between Owner and Contractor, as modified by Owner with attached Exhibits "A' through "F," all of which are made a part hereof by this reference.

.2 Exhibit A, Insurance and Bonds: AIA Document A101™ 2017

.3 Exhibit B, ITB 24-08 Police Department HVAC Renovation

.4 Exhibit C, Contractor's Proposal

.5 Exhibit D, Applications for Payment

.6 Exhibit E, Forms

.7 Exhibit F, Contractors Completion Checklist

.8 Addenda:

Number	Date	Pages
Addendum No. 1	April 4, 2024	Pages 1 - 2
Addendum No. 2	March 20, 2024	Page 1
Addendum No. 3	April 10, 2024	Pages 1 - 4

(Paragraphs deleted)

(Paragraphs deleted)

Portions of Addenda relating to bidding or proposal requirements are not part of the Contract Documents unless the bidding or proposal requirements are also enumerated in this Article 9.

.9 General Conditions of the Contract for Construction: AIA Document A201™-2017

(Paragraphs deleted)

(Paragraph deleted)

.10 ITB 22-08 Drawings, Specifications, and Requirements

Title	Date	Pages
Attachment "A" – Drawings	1/22/2024	1 – 18

(Paragraphs deleted)

(Paragraphs deleted)

This Agreement entered into as of the day and year first written above.

City of Port Orange	Paul Culver Construction, Inc.
OWNER *(Signature)*	CONTRACTOR *(Signature)*
Date: 5/21/2024	Date: 5/9/24
Donald O. Burnette, Mayor	***Paul K. Culver, President***

(Row deleted)

AIA Document A101 – 2017. Copyright © 1915, 1918, 1925, 1937, 1951, 1958, 1961, 1963, 1967, 1974, 1977, 1987, 1991, 1997, 2007 and 2017. All rights reserved. "The American Institute of Architects," "American Institute of Architects," "AIA," the AIA Logo, and "AIA Contract Documents" are trademarks of The American Institute of Architects. This document was produced at 15:33:22 ET on 05/08/2024 under Order No.2114457573 which expires on 07/31/2024, is not for resale, is licensed for one-time use only, and may only be used in accordance with the AIA Contract Documents® Terms of Service. To report copyright violations, e-mail docinfo@aiacontracts.com.
User Notes:
(1413630004)

Additions and Deletions Report for
AIA® Document A101® – 2017

This Additions and Deletions Report, as defined on page 1 of the associated document, reproduces below all text the author has added to the standard form AIA document in order to complete it, as well as any text the author may have added to or deleted from the original AIA text. Added text is shown underlined. Deleted text is indicated with a horizontal line through the original AIA text.

Note: This Additions and Deletions Report is provided for information purposes only and is not incorporated into or constitute any part of the associated AIA document. This Additions and Deletions Report and its associated document were generated simultaneously by AIA software at 15:33:22 ET on 05/08/2024.

PAGE 1

AGREEMENT made as of the day of in the year
~~(In words, indicate day, month and year.)~~2024

...

~~(Name, legal status, address and other information)~~
City of Port Orange, a Florida Municipal Corporation
1000 City Center Circle Port Orange, Florida 32129
(386) 506-5575

...

~~(Name, legal status, address and other information)~~
Paul Culver Construction, Inc.
201 Osceola Avenue
Daytona Beach, Florida 32124

...

for the following Project:
~~(Name, location and detailed description)~~

ITB 24-08 Police Department HVAC Renovation

...

~~(Name, legal status, address and other information)~~
Schenkel & Shultz, Inc.
200 East Robinson Street
Suite 300
Orlando, Florida 32801

PAGE 2

~~*(Check one of the following boxes.)*~~

...

[X] A date set forth in a notice to proceed issued by the Owner.

...

~~*(Insert a date or a means to determine the date of commencement of the Work.)*~~

Additions and Deletions Report for AIA Document A101 – 2017. Copyright © 1915, 1918, 1925, 1937, 1951, 1958, 1961, 1963, 1967, 1974, 1977, 1987, 1991, 1997, 2007 and 2017. All rights reserved. "The American Institute of Architects," "American Institute of Architects," "AIA," the AIA Logo, and "AIA Contract Documents" are trademarks of The American Institute of Architects. This document was produced at 15:33:22 ET on 05/08/2024 under Order No.2114457573 which expires on 07/31/2024, is not for resale, is licensed for one-time use only, and may only be used in accordance with the AIA Contract Documents® Terms of Service. To report copyright violations, e-mail docinfo@aiacontracts.com.
User Notes:

...

~~*(Check one of the following boxes and complete the necessary information.)*~~

PAGE 3

[X] By the following date: Contractor shall achieve Substantial Completion of the work not later than 180 days from the issuance of a written Notice to Proceed issued by the City, with final completion 30 days thereafter.

...

N/A	N/A

...

§ 4.1 The Owner shall pay the Contractor the Contract Sum in current funds for the Contractor's performance of the Contract. The Contract Sum shall be ~~($ —),~~ Eight Hundred Seventy-Seven Thousand Nine Hundred Ninety-Nine and 00/100 Dollars ($877,999.00), subject to additions and deductions as provided in the Contract Documents.

...

N/A	N/A

...

~~*(Insert below each alternate and the conditions that must be met for the Owner to accept the alternate.)*~~

...

N/A	N/A	N/A

...

~~*(Identify each allowance.)*~~

...

N/A	N/A

...

~~*(Identify the item and state the unit price and quantity limitations, if any, to which the unit price will be applicable.)*~~

...

N/A	N/A	N/A

...

~~*(Insert terms and conditions for liquidated damages, if any.)*~~

0.00 per day.

...

~~*(Insert provisions for bonus or other incentives, if any, that might result in a change to the Contract Sum.)*~~

Additions and Deletions Report for AIA Document A101 – 2017. Copyright © 1915, 1918, 1925, 1937, 1951, 1958, 1961, 1963, 1967, 1974, 1977, 1987, 1991, 1997, 2007 and 2017. All rights reserved. "The American Institute of Architects," "American Institute of Architects," "AIA," the AIA Logo, and "AIA Contract Documents" are trademarks of The American Institute of Architects. This document was produced at 15:33:22 ET on 05/08/2024 under Order No.2114457573 which expires on 07/31/2024, is not for resale, is licensed for one-time use only, and may only be used in accordance with the AIA Contract Documents® Terms of Service. To report copyright violations, e-mail docinfo@aiacontracts.com.
User Notes: (1413630004)

PAGE 4

§ 5.1.3 Provided that an Application for Payment is received by the Architect not later than the 1st day of a month, and the Contractor obtains Architect's certification of the application for payment within 10 days thereafter, then the Owner shall make payment of the amount certified to the Contractor not later than the 10th day of the following month. If an Application for Payment is received by the Architect after the application date fixed above, and the Contractor obtains Architect's certification of the application for payment within 10 days thereafter, then payment of the amount certified shall be made by the Owner not later than ~~( )~~ 30 days after the Architect receives the Application for Payment.
~~(Federal, state or local laws may require payment within a certain period of time.)~~

§ 5.1.4 Each Application for Payment shall be based on the most recent schedule of values submitted by the Contractor in accordance with the Contract Documents. The schedule of values shall allocate the entire Contract Sum among the various portions of the Work. The schedule of values shall be prepared in such form, and supported by such data to substantiate its accuracy, as the Architect may require. This ~~schedule of values~~ schedule, unless objected to by the Architect, shall be used as a basis for reviewing the Contractor's Applications for Payment.

...

~~*(Insert a percentage or amount to be withheld as retainage from each Application for Payment. The amount of retainage may be limited by governing law.)*~~

PAGE 5

~~*(Insert any items not subject to the withholding of retainage, such as general conditions, insurance, etc.)*~~

...

~~*(If the retainage established in Section 5.1.7.1 is to be modified prior to Substantial Completion of the entire Work, including modifications for Substantial Completion of portions of the Work as provided in Section 3.3.2, insert provisions for such modifications.)*~~

No reduction of retainage below five percent (5%).

§ 5.1.7.3 ~~Except as set forth in this Section 5.1.7.3, upon Substantial Completion of the Work, the Contractor may submit an Application for Payment that includes the retainage withheld from prior Applications for Payment pursuant to this Section 5.1.7. The Application for Payment submitted at Substantial Completion shall not include retainage as follows:~~
~~(Insert any other conditions for release of retainage upon Substantial Completion.)~~
Deleted in its entirety.

...

~~(Insert rate of interest agreed upon, if any.)~~All payments shall be governed by the Local Government Prompt Payment Act as set forth in Sections 218.70 through 218.79, Florida Statutes, as amended.

~~%~~

...

~~*(If the parties mutually agree, insert the name, address and other contact information of the Initial Decision Maker, if other than the Architect.)*~~

Additions and Deletions Report for AIA Document A101 – 2017. Copyright © 1915, 1918, 1925, 1937, 1951, 1958, 1961, 1963, 1967, 1974, 1977, 1987, 1991, 1997, 2007 and 2017. All rights reserved. "The American Institute of Architects," "American Institute of Architects," "AIA," the AIA Logo, and "AIA Contract Documents" are trademarks of The American Institute of Architects. This document was produced at 15:33:22 ET on 05/08/2024 under Order No.2114457573 which expires on 07/31/2024, is not for resale, is licensed for one-time use only, and may only be used in accordance with the AIA Contract Documents® Terms of Service. To report copyright violations, e-mail docinfo@aiacontracts.com.
User Notes:

(1413630004)

Architect's actions, subject to recommendation to Owner, and Owner approval prior to action.

...

~~*(Check the appropriate box.)*~~

...

[X] Litigation in a court of competent ~~jurisdiction~~

~~[ ] Other *(Specify)*~~

jurisdiction. If the Owner and Contractor do not select a method of binding dispute resolution, or do not subsequently agree in writing to a binding dispute resolution method other than litigation, Claims ~~will be resolved by litigation in a court of competent jurisdiction.~~shall be resolved by litigation, and shall have its venue located exclusively in the Circuit Court of Volusia County, Florida, and the Parties hereby expressly consent and submit themselves to the personal jurisdiction and venue of the Court.

PAGE 6

§ 7.1 The Contract may be terminated by the Owner or the Contractor as provided in Article 14 of AIA Document ~~A201–2017.~~A201–2017, as modified by Owner.

...

~~*(Insert the amount of, or method for determining, the fee, if any, payable to the Contractor following a termination for the Owner's convenience.)*~~

§ 7.2 The Work may be suspended by the Owner as provided in Article 14 of AIA Document ~~A201–2017.~~A201–2017, as modified by the Owner.

...

~~*(Name, address, email address, and other information)*~~

Junos Reed, City Engineer
1000 City Center Circle
Port Orange, Florida 32129
jureed@port-orange.org
(386) 506-5751

...

~~*(Name, address, email address, and other information)*~~

Paul Culver Construction, Inc.
201 Osceola Road
Daytona Beach, Florida 32124
paul@paulculverconstruction.com
(386) 763-4190

PAGE 7

Additions and Deletions Report for AIA Document A101 – 2017. Copyright © 1915, 1918, 1925, 1937, 1951, 1958, 1961, 1963, 1967, 1974, 1977, 1987, 1991, 1997, 2007 and 2017. All rights reserved. "The American Institute of Architects," "American Institute of Architects," "AIA," the AIA Logo, and "AIA Contract Documents" are trademarks of The American Institute of Architects. This document was produced at 15:33:22 ET on 05/08/2024 under Order No.2114457573 which expires on 07/31/2024, is not for resale, is licensed for one-time use only, and may only be used in accordance with the AIA Contract Documents® Terms of Service. To report copyright violations, e-mail docinfo@aiacontracts.com.
User Notes:
(1413630004)

~~*(If other than in accordance with AIA Document E203–2013, insert requirements for delivering notice in electronic format such as name, title, and email address of the recipient and whether and how the system will be required to generate a read receipt for the transmission.)*~~

...

§8.7.1 PUBLIC RECORD COMPLIANCE Contractor shall comply with public records laws as set forth in Section 119, Florida Statutes, and shall specifically: (a) keep and maintain public records that ordinarily and necessarily would be required by the City in order to perform the service; (b) provide the public with access to public records on the same terms and conditions that the City would provide the records at a cost that does not exceed the cost provided in Section 119, Florida Statutes, or as otherwise provided by law; (c) ensure that public records that are exempt or confidential and exempt from public records disclosure requirements are not disclosed except as authorized by law; and (d) meet all requirements for retaining public records and transfer to the City, at no cost, all public records in possession of the Contractor upon termination of the Contract and destroy any duplicate public records that are exempt or confidential and exempt from public records disclosure requirements. All records stored electronically must be provided to the City in a format that is compatible with the information technology systems of the City.

§ 8.7.2 RECORDS
The design, permits and all other records prepared by the Contractor, assembled for the City, subcontracted for the City, and any other records related to the scope of work in the possession of the Contractor shall be retained by the Contractor for the requisite time set forth in Florida Administration Code Rule 1 b-24 http://dos.myflorida.com/library-archives/records-management/. Contractor may dispose of the records in accordance with Florida law, upon receipt of a signed written release signed by the City Attorney. Contractor agrees to indemnify the City for failure to comply with the requirements of this paragraph including costs of litigation and legal fees incurred through all appeals. City reserves the right to select and approve the defense attorney.

§ 8.7.3 FORCE MAJEURE
Neither party shall be liable for any delay in performance or failure to perform any obligation hereunder if, and to the extent that, such failure or delay is caused by an event of Force Majeure. Force Majeure shall mean any act, event or condition that is beyond the party's reasonable control, that materially and adversely affects the party's ability to perform its obligations hereunder, and that is not the result of the party's willful neglect, error, omission or failure to exercise reasonable due diligence.

§ 8.7.4 CONTRACT CONSTRUCTION
This Contract may be executed in one or more counterparts, each of which shall be deemed an original but all of which together constitute one and the same instrument. The delivery by facsimile or e-mail of an executed copy of this Contract shall be deemed valid as if an original signature was delivered. No contract shall be formed between the Contractor and the City until both Parties have signed this Contract.

§ 8.7.5 FINANCIAL DISCLOSURES
During the term of this Contract, Contractor covenants and agrees that it will keep adequate books and records of accounts in accordance with Generally Accepted Accounting Principles (GAAP). Contractor further covenants and agrees that in the event the Contractor becomes insolvent and/or fails to pay its current obligations when they become due, Contractor shall so advise Owner of such situation and, upon request from the Owner, Contractor shall provide to Owner financial statements of Contractor, including current income and expense statements of Contractor, consolidated balance sheets signed by a financial officer of Contractor, and audited reports provided by Contractor to Contractor's Surety, audited financial statements certified by a Certified Public Accountant concerning the financial affairs of the Contractor and all affiliates of Contractor, and such other financial information requested by Owner. All such financial information shall comply with GAAP.

In the event that Contractor becomes insolvent and/or fails to pay its obligations when they become due, Contractor hereby authorized its sureties, lenders, financial institutions and other third parties to release Owner financial information requested by Owner, including, but not limited to, the financial information described in the preceding paragraph.

§ 8.7.6 WAIVER OF JURY TRIAL
All parties hereby waive any and all right to any trial by jury in any action or proceeding arising directly or indirectly hereunder.
PAGE 8

Additions and Deletions Report for AIA Document A101 – 2017. Copyright © 1915, 1918, 1925, 1937, 1951, 1958, 1961, 1963, 1967, 1974, 1977, 1987, 1991, 1997, 2007 and 2017. All rights reserved. "The American Institute of Architects," "American Institute of Architects," "AIA," the AIA Logo, and "AIA Contract Documents" are trademarks of The American Institute of Architects. This document was produced at 15:33:22 ET on 05/08/2024 under Order No.2114457573 which expires on 07/31/2024, is not for resale, is licensed for one-time use only, and may only be used in accordance with the AIA Contract Documents® Terms of Service. To report copyright violations, e-mail docinfo@aiacontracts.com.
User Notes: (1413630004)

.1 AIA Document A101™–2017, Standard Form of Agreement Between Owner and ~~Contractor~~Contractor, as modified by Owner with attached Exhibits "A' through "F," all of which are made a part hereof by this reference.

.2 ~~AIA Document A101™–2017,~~ Exhibit A, Insurance and ~~Bonds~~ Bonds: AIA Document A101™ 2017

.3 ~~AIA Document A201™–2017, General Conditions of the Contract for Construction~~Exhibit B, ITB 24-08 Police Department HVAC Renovation

.4 ~~AIA Document E203™–2013, Building Information Modeling and Digital Data Exhibit, dated as indicated below:~~Exhibit C, Contractor's Proposal

~~(Insert the date of the E203-2013 incorporated into this Agreement.)~~.5 Exhibit D, Applications for Payment

.6 Exhibit E, Forms

.7 Exhibit F, Contractors Completion Checklist

~~.5 Drawings~~.8 Addenda:

~~Number~~	~~Title~~Date	~~Date~~Pages
Addendum No. 1	April 4, 2024	Pages 1 - 2
Addendum No. 2	March 20, 2024	Page 1
Addendum No. 3	April 10, 2024	Pages 1 - 4

~~.6 Specifications~~*(Paragraphs deleted)*

~~Section~~	~~Title~~	~~Date~~	~~Pages~~

~~.7 Addenda, if any:~~

~~Number~~	~~Date~~	~~Pages~~

~~.8 Other Exhibits:~~
~~*(Check all boxes that apply and include appropriate information identifying the exhibit where required.)*~~

~~[ ] AIA Document E204™–2017, Sustainable Projects Exhibit, dated as indicated below:~~.9 General Conditions of the Contract for Construction: AIA Document A201™-2017

~~*(Insert the date of the E204-2017 incorporated into this Agreement.)*~~*(Paragraphs deleted)*

~~[ ] The Sustainability Plan:~~.10 ITB 22-08 Drawings, Specifications, and Requirements

...

Attachment "A" – Drawings	1/22/2024	1 – 18

~~[ ] Supplementary and other Conditions of the Contract:~~

~~Document~~	~~Title~~	~~Date~~	~~Pages~~

~~.9 Other documents, if any, listed below:~~
~~*(List here any additional documents that are intended to form part of the Contract Documents. AIA Document A201™–2017 provides that the advertisement or invitation to bid, Instructions to Bidders, sample forms, the Contractor's bid or proposal, portions of Addenda relating to bidding or proposal*~~

Additions and Deletions Report for AIA Document A101 – 2017. Copyright © 1915, 1918, 1925, 1937, 1951, 1958, 1961, 1963, 1967, 1974, 1977, 1987, 1991, 1997, 2007 and 2017. All rights reserved. "The American Institute of Architects," "American Institute of Architects," "AIA," the AIA Logo, and "AIA Contract Documents" are trademarks of The American Institute of Architects. This document was produced at 15:33:22 ET on 05/08/2024 under Order No.2114457573 which expires on 07/31/2024, is not for resale, is licensed for one-time use only, and may only be used in accordance with the AIA Contract Documents® Terms of Service. To report copyright violations, e-mail docinfo@aiacontracts.com.
User Notes:

~~*requirements, and other information furnished by the Owner in anticipation of receiving bids or proposals, are not part of the Contract Documents unless enumerated in this Agreement. Any such documents should be listed here only if intended to be part of the Contract Documents.)*~~

(Paragraphs deleted)

...

City of Port Orange	Paul Culver Construction, Inc.
...	
Date:	Date:
Donald O. Burnette, Mayor	***Paul K. Culver, President***
~~*(Printed name and title)*~~	~~*(Printed name and title)*~~

Additions and Deletions Report for AIA Document A101 – 2017. Copyright © 1915, 1918, 1925, 1937, 1951, 1958, 1961, 1963, 1967, 1974, 1977, 1987, 1991, 1997, 2007 and 2017. All rights reserved. "The American Institute of Architects," "American Institute of Architects," "AIA," the AIA Logo, and "AIA Contract Documents" are trademarks of The American Institute of Architects. This document was produced at 15:33:22 ET on 05/08/2024 under Order No.2114457573 which expires on 07/31/2024, is not for resale, is licensed for one-time use only, and may only be used in accordance with the AIA Contract Documents® Terms of Service. To report copyright violations, e-mail docinfo@aiacontracts.com.
User Notes: (1413630004)

Certification of Document's Authenticity

AIA® Document D401™ – 2003

I, , hereby certify, to the best of my knowledge, information and belief, that I created the attached final document simultaneously with its associated Additions and Deletions Report and this certification at 15:33:22 ET on 05/08/2024 under Order No. 2114457573 from AIA Contract Documents software and that in preparing the attached final document I made no changes to the original text of AIA® Document A101™ – 2017, Standard Form of Agreement Between Owner and Contractor where the basis of payment is a Stipulated Sum, other than those additions and deletions shown in the associated Additions and Deletions Report.

_____

(Signed)

_____

(Title)

_____

(Dated)

AIA Document D401 – 2003. Copyright © 1992 and 2003. All rights reserved. "The American Institute of Architects," "American Institute of Architects," "AIA," the AIA Logo, and "AIA Contract Documents" are trademarks of The American Institute of Architects. This document was produced at 15:33:22 ET on 05/08/2024 under Order No.2114457573 which expires on 07/31/2024, is not for resale, is licensed for one-time use only, and may only be used in accordance with the AIA Contract Documents® Terms of Service. To report copyright violations, e-mail docinfo@aiacontracts.com.
User Notes:
(1413630004)

FRONT PAGE FOR BOND REQUIRED BY SECTION 255.05, F.S.

PAYMENT AND PERFORMANCE BOND

(Public Works)

Notice and Time Limitations Must Be In Accordance
With Section 255.05(2), (8) and (10), Florida Statutes

BOND NO. GM225748

PRINCIPAL:

Developer or Contractor:	Paul Culver Construction, Inc.
Principal Business Address:	201 Osceola Avenue Daytona Beach, Florida 32114
Contact Person:	Paul K. Culver, President
Phone Number:	(386) 763-4190

SURETY:

Address:	Great Midwest Insurance Company 800 Gessner, Suite 600 Houston, Texas 77024
Contact Person:	Julie Ratliff
Phone Number:	(713) 935-0226

OWNER:

	City of Port Orange, Florida, a chartered municipal corporation 1000 City Center Circle Port Orange, Florida 32129-4144
Contact Person:	City Manager
Phone Number:	(386) 506-5501

Amount: $877,999.00 **City Case/Project No.** ITB 24-08 Police Department HVAC Renovation

Description of Work: ITB 24-08 Police Department HVAC Renovation

Project Location: City of Port Orange Police Department, 4545 Clyde Morris Boulevard, Port Orange, Volusia County, Florida 32127

Legal Description: Portions of Parcel ID#: 6307-00-00-0012
See Attached **Exhibit "A"**

Front Page

All other pages are subsequent to this page regardless of any numbers that may be printed thereon.

City of Port Orange Police Department
4545 Clyde Morris Boulevard, Port Orange, FL 32127

Full Parcel ID:
07-16-33-00-00-0012

Short Parcel ID:
6307-00-00-0012

Legal Description:
A portion of the Parcel ID listed above.

EXHIBIT "A"

Paul Culver Construction, Inc.

ITB 24-08 Police Department HVAC Renovation

Bond No. GM225748

COMBINATION PAYMENT AND PERFORMANCE BOND FOR PUBLIC CONSTRUCTION

per Section 255.05, Florida Statutes
Guaranty for Construction of Public Improvements

BY THIS BOND, We, **PAUL CULVER CONSTRUCTION, INC.** as Principal, and Great Midwest Insurance Company, a corporation, as Surety, are bound to **CITY OF PORT ORANGE, FLORIDA**, a Florida municipal corporation, herein called "Owner" or sometimes referred to as "City," in the sum of **EIGHT HUNDRED SEVENTY-SEVEN THOUSAND NINE HUNDRED NINETY-NINE AND 00/100 DOLLARS ($877,999.00)**, for payment of which we bind ourselves, our heirs, personal representatives, successors, and assigns, jointly and severally.

THE CONDITION OF THIS BOND is that if Principal:

1. Performs the terms of that certain AIA Contract for Services, having an effective date of May 21, 2024, entered into by and between the Principal and the City, for Police Department HVAC Renovation, hereinafter referred to as the "Contract," being made a part of this bond by reference, at the times and in the manner prescribed in the Contract; and

2. Promptly makes payments to all claimants, as defined in Section 255.05(1), Florida Statutes, supplying Principal with labor, materials, or supplies, used directly or indirectly by Principal in the prosecution of the work provided for in the Contract (the "Work"); and

3. Pays Owner all losses, damages, delay damages (including contractually authorized liquidated damages), expenses, costs, and attorney's fees, including appellate proceedings, that Owner sustains because of a breach or material breach by Principal under the Contract documents; and

4. Performs the guarantee of all work and materials furnished under the Contract for the time specified in the Contract, then this bond is void; otherwise it remains in full force.

Notice of Nonpayment and Time Limitations

Any action instituted by a claimant under this bond for payment must be in accordance with the notice and time limitation provisions in Sections 255.05(2), (8) and (10), Florida Statutes.

Any changes in or under the contract documents and compliance or noncompliance with any formalities connected with the contract or the changes does not affect Surety's obligation under this bond.

IN WITNESS WHEREOF, this performance and payment bond is executed and shall be deemed an original, this 21st day of May, 2024.

Attest:

PAUL CULVER CONSTRUCTION, INC.

(As to Corporate Principal) Secretary

By: Paul K. Culver, President

(Witness to Principal)

(Corporate Seal)

Great Midwest Insurance Company
(Surety)

Natalie C. Demers (Witness to Surety)

By: Donald Bramlage
Name: Donald Bramlage, Attorney-In-Fact & Licensed FL Agent
(Attorney-in-Fact) Inquiries: 407-330-3990

(Corporate Seal)

NOTE: Date of BOND must not be prior to date of Contract. If Developer/Principal is Partnership, all partners should execute BOND. All BONDS signed by an agent must be accompanied by a certified copy of the authority to act.

IMPORTANT: Surety companies executing BONDS must appear on the Treasury Department's most current list (Circular 570 as amended) and be authorized to transact business in the State of Florida.

POWER OF ATTORNEY

Great Midwest Insurance Company

KNOW ALL MEN BY THESE PRESENTS, that **GREAT MIDWEST INSURANCE COMPANY**, a Texas Corporation, with its principal office in Houston, TX, does hereby constitute and appoint:

Dale A. Belis, Marilyn Ann Blome, Donald Bramlage, Edward M. Clark, Christian Collins, F. Danny Gann, David R. Hoover, Jarrett Merlucci, Laura D. Mosholder, Charles J. Nielson, Jessica P. Reno, Audria R. Ward, Edward T. Ward, Kevin Wojtowicz, Richard Zimmerman, Charles D. Nielson, Brett M. Rosenhaus

its true and lawful Attorney(s)-In-Fact to make, execute, seal and deliver for, and on its behalf as surety, any and all bonds, undertakings or other writings obligatory in nature of a bond.

This authority is made under and by the authority of a resolution which was passed by the Board of Directors of **GREAT MIDWEST INSURANCE COMPANY**, on the 1st day of October, 2018 as follows:

Resolved, that the President, or any officer, be and hereby is, authorized to appoint and empower any representative of the Company or other person or persons as Attorney-In-Fact to execute on behalf of the Company any bonds, undertakings, policies, contracts of indemnity or other writings obligatory in nature of a bond not to exceed Ten Million dollars ($10,000,000.00), which the Company might execute through its duly elected officers, and affix the seal of the Company thereto. Any said execution of such documents by an Attorney-In-Fact shall be as binding upon the Company as if they had been duly executed and acknowledged by the regularly elected officers of the Company. Any Attorney-In-Fact, so appointed, may be removed in the Company's sole discretion and the authority so granted may be revoked as specified in the Power of Attorney.

Resolved, that the signature of the President and the seal of the Company may be affixed by facsimile on any power of attorney granted, and the signature of the Secretary, and the seal of the Company may be affixed by facsimile to any certificate of any such power and any such power or certificate bearing such facsimile signature and seal shall be valid and binding on the Company. Any such power so executed and sealed and certificate so executed and sealed shall, with respect to any bond of undertaking to which it is attached, continue to be valid and binding on the Company.

IN WITNESS THEREOF, **GREAT MIDWEST INSURANCE COMPANY**, has caused this instrument to be signed by its President, and its Corporate Seal to be affixed this 11th day of February, 2021.

GREAT MIDWEST INSURANCE COMPANY

BY Mark W. Haushill

Mark W. Haushill
President

GREAT MIDWEST INSURANCE COMPANY CORPORATE SEAL TEXAS CORPORATION

ACKNOWLEDGEMENT

On this 11th day of February, 2021, before me, personally came Mark W. Haushill to me known, who being duly sworn, did depose and say that he is the President of **GREAT MIDWEST INSURANCE COMPANY**, the corporation described in and which executed the above instrument; that he executed said instrument on behalf of the corporation by authority of his office under the By-laws of said corporation.

CHRISTINA BISHOP
Notary Public, State of Texas
Comm. Expires 04-14-2025
Notary ID 131090488

BY

Christina Bishop
Notary Public

CERTIFICATE

I, the undersigned, Secretary of **GREAT MIDWEST INSURANCE COMPANY**, A Texas Insurance Company, DO HEREBY CERTIFY that the original Power of Attorney of which the foregoing is a true and correct copy, is in full force and effect and has not been revoked and the resolutions as set forth are now in force.

Signed and Sealed at Houston, TX this 21st Day of May, 2024.

GREAT MIDWEST INSURANCE COMPANY CORPORATE SEAL TEXAS CORPORATION

GREAT MIDWEST INSURANCE COMPANY CORPORATE SEAL

BY

Leslie K. Shaunty
Secretary

"WARNING: Any person who knowingly and with intent to defraud any insurance company or other person, files and application for insurance of claim containing any materially false information, or conceals for the purpose of misleading, information concerning any fact material thereto, commits a fraudulent insurance act, which is a crime and subjects such person to criminal and civil penalties.

HUMAN TRAFFICKING AFFIDAVIT
(SECTION 787.06, FLORIDA STATUTES)

STATE OF Florida §
§
COUNTY OF Volusia §

The undersigned ("Affiant"), on behalf of the entity listed below ("Entity"), after being duly sworn, hereby attests as follows:

1. My name is Paul K Culver. I am over the age of Twenty-one years old. I am the President (Title) of Paul Culver Construction, Inc (Business Name), a non-governmental entity which does business in the State of Florida, hereinafter called the "Entity."

2. I have personal knowledge of each and every statement of fact contained herein, and each and every statement of fact is true and correct.

3. Entity does not use coercion, as defined in Section 787.06, Florida Statutes, for labor or services.

4. The undersigned is an officer or representative of the entity and is authorized to execute this affidavit on behalf of the Entity.

5. Under penalties of perjury, I declare that I have read the foregoing Human Trafficking Affidavit and that the facts stated herein are true.

Further Affiant sayeth not.

Date: September 24, 20 24

Signed: _____

Print Name: Paul K Culver

Title: President

SUBSCRIBED AND SWORN before me by means of [X] physical presence or [__] online notarization on the 24th day of September, 2024 by Paul K Culver as President on behalf of Paul Culver Construction, Inc who is personally known to me or who has produced _____ as identification.

NOTARY PUBLIC STATE OF FLORIDA
Rose Arlene Pacholsky
My Commission HH 503287
Expires 6/10/2028
(Notary Seal)

Notary Public, State of Florida

Printed name, commission and expiration of commission term
Rose Arlene Pacholsky, HH 503287 06/10/2028

SKB.7.8.2024. Rev. 9.6.2024
CA7985

CERTIFICATE OF LIABILITY INSURANCE

DATE (MM/DD/YYYY): 02/22/2024

THIS CERTIFICATE IS ISSUED AS A MATTER OF INFORMATION ONLY AND CONFERS NO RIGHTS UPON THE CERTIFICATE HOLDER. THIS CERTIFICATE DOES NOT AFFIRMATIVELY OR NEGATIVELY AMEND, EXTEND OR ALTER THE COVERAGE AFFORDED BY THE POLICIES BELOW. THIS CERTIFICATE OF INSURANCE DOES NOT CONSTITUTE A CONTRACT BETWEEN THE ISSUING INSURER(S), AUTHORIZED REPRESENTATIVE OR PRODUCER, AND THE CERTIFICATE HOLDER.

IMPORTANT: If the certificate holder is an ADDITIONAL INSURED, the policy(ies) must have ADDITIONAL INSURED provisions or be endorsed. If SUBROGATION IS WAIVED, subject to the terms and conditions of the policy, certain policies may require an endorsement. A statement on this certificate does not confer rights to the certificate holder in lieu of such endorsement(s).

PRODUCER Brown and Brown of Florida, Inc. PO Box 2412 Daytona Beach FL 32115	CONTACT NAME: Brenda Klaus PHONE (A/C, No, Ext): (386) 361-5292 FAX (A/C, No): E-MAIL ADDRESS: brenda.klaus@bbrown.com
INSURED Paul Culver Construction, Inc. 201 Osceola Ave Daytona Beach FL 32114	INSURER(S) AFFORDING COVERAGE — NAIC # INSURER A : Southern Owners Insurance Company — 10190 INSURER B : Progressive Express Insurance Company — 10193 INSURER C : American Builders Insurance Co. — 11240 INSURER D : INSURER E : INSURER F :

COVERAGES **CERTIFICATE NUMBER:** 24-25 **REVISION NUMBER:**

THIS IS TO CERTIFY THAT THE POLICIES OF INSURANCE LISTED BELOW HAVE BEEN ISSUED TO THE INSURED NAMED ABOVE FOR THE POLICY PERIOD INDICATED. NOTWITHSTANDING ANY REQUIREMENT, TERM OR CONDITION OF ANY CONTRACT OR OTHER DOCUMENT WITH RESPECT TO WHICH THIS CERTIFICATE MAY BE ISSUED OR MAY PERTAIN, THE INSURANCE AFFORDED BY THE POLICIES DESCRIBED HEREIN IS SUBJECT TO ALL THE TERMS, EXCLUSIONS AND CONDITIONS OF SUCH POLICIES. LIMITS SHOWN MAY HAVE BEEN REDUCED BY PAID CLAIMS.

INSR LTR	TYPE OF INSURANCE	ADDL INSD	SUBR WVD	POLICY NUMBER	POLICY EFF (MM/DD/YYYY)	POLICY EXP (MM/DD/YYYY)	LIMITS	
A	☒ COMMERCIAL GENERAL LIABILITY ☐ CLAIMS-MADE ☒ OCCUR ☒ XCU Included ☐ GEN'L AGGREGATE LIMIT APPLIES PER: ☐ POLICY ☒ PRO-JECT ☒ LOC ☐ OTHER:			152382-72417656	02/10/2024	02/10/2025	EACH OCCURRENCE DAMAGE TO RENTED PREMISES (Ea occurrence) MED EXP (Any one person) PERSONAL & ADV INJURY GENERAL AGGREGATE PRODUCTS - COMP/OP AGG	$ 2,000,000 $ 50,000 $ 5,000 $ 2,000,000 $ 1,000,000 $ 1,000,000
B	AUTOMOBILE LIABILITY ☐ ANY AUTO ☐ OWNED AUTOS ONLY ☒ SCHEDULED AUTOS ☐ HIRED AUTOS ONLY ☐ NON-OWNED AUTOS ONLY			965981383	02/10/2024	02/10/2025	COMBINED SINGLE LIMIT (Ea accident) BODILY INJURY (Per person) BODILY INJURY (Per accident) PROPERTY DAMAGE (Per accident) PIP	$ 1,000,000 $ $ $ $ 10,000
A	☒ UMBRELLA LIAB ☒ OCCUR ☐ EXCESS LIAB ☐ CLAIMS-MADE ☐ DED ☒ RETENTION $ 10,000			5[illegible]2-02	02/10/2024	02/10/2025	EACH OCCURRENCE AGGREGATE Prods & Completed Ops	$ 4,000,000 $ 4,000,000 $ 4,000,000
C	WORKERS COMPENSATION AND EMPLOYERS' LIABILITY ANY PROPRIETOR/PARTNER/EXECUTIVE OFFICER/MEMBER EXCLUDED? (Mandatory in NH) ☐ N/A If yes, describe under DESCRIPTION OF OPERATIONS below			WC[illegible]310621 02	02/10/2024	02/10/2025	☒ PER STATUTE ☐ OTH-ER E.L. EACH ACCIDENT E.L. DISEASE - EA EMPLOYEE E.L. DISEASE - POLICY LIMIT	 $ 1,000,000 $ 1,000,000 $ 1,000,000
A	Installation Floater			152382-72417656	02/10/2024	02/10/2025		325,000

Revised

DESCRIPTION OF OPERATIONS / LOCATIONS / VEHICLES (ACORD 101, Additional Remarks Schedule, may be attached if more space is required)

SEE NOTES FOR POLICY COVERAGE FORMS
CITY OF PORT ORANGE IS ADDITIONAL INSURED AND WAIVER OF SUBROGATION APPLIES AS REQUIRED BY WRITTEN CONTRACT AND IF APPLICABLE, PER THE FORMS LISTED ON THE ATTACHED ADDITIONAL REMARKS SCHEDULE.
30 DAY NOTICE OF CANCELLATION, EXCEPT FOR NON-PAYMENT OF PREMIUM, WILL BE PROVIDED TO THE CERTIFICATE HOLDER BY THE CARRIER FOR GENERAL LIABILITY, AUTO LIABILITY

CERTIFICATE HOLDER	CANCELLATION
CITY OF PORT ORANGE 1000 CITY CENTER CIRCLE PORT ORANGE FL 32129	SHOULD ANY OF THE ABOVE DESCRIBED POLICIES BE CANCELLED BEFORE THE EXPIRATION DATE THEREOF, NOTICE WILL BE DELIVERED IN ACCORDANCE WITH THE POLICY PROVISIONS. AUTHORIZED REPRESENTATIVE

© 1988-2015 ACORD CORPORATION. All rights reserved.

CITY COUNCIL AGENDA ITEM

COUNCIL MEETING DATE 3/18/2025

SUBJECT: (D6h) Approval of Change Order No. 2 to EJCDC Agreement for ITB #22-07 with Chinchor Electric, Inc. relating to the Water Treatment Plant Generator Replacement

DEPARTMENT: Engineering

GOAL: 2 - Infrastructure

RECOMMENDED MOTION: Move to approve Change Order No. 2 to the EJCDC Agreement for ITB #22-07 with Chinchor Electric, Inc. and authorize Mayor and City Clerk to execute all contract documents.

SUMMARY: The Engineering Department is requesting approval of Change Order No. 2 to the Construction Agreement with Chinchor Electric, Inc. for the Water Treatment Plant Generator Replacement Project to add 180 days to the Substantial Completion date, adjusting the Substantial Completion date from November 24, 2024, to May 23, 2025, and the Final Completion date from December 24, 2024, to June 22, 2025.

The extension request is due to extended electrical equipment delivery delays on the Motor Control Centers (MCC) and the main switch gear for the project, which have caused significant project delays. During the project, the contractors' supplier for the MCC's and main switch gear moved the delivery date multiple times siting supply chain issues. Up until the most recent delivery delay, the contractor was on schedule to finish the project on time. The contractor has now taken delivery of the MCC's and switch gear and is currently working towards completing the project. Additional time is needed to complete the installation of the electrical components in the new electrical room, start up and test the new generator, and coordinate with FPL for the installation of new primary feeders. There is no additional cost associated with this Change Order No.2.

PRESENTER: Junos Reed

ATTACHMENTS:

1.	Chinchor Electric, Inc. Change Order No 2 Water Treatment Plant Generator Replacement	Chinchor Electric, Inc. Change Order No 2 Water Treatment Plant Generator Replacement.pdf
2.	Chinchor Extension Request	Chinchor Extension Request.pdf
3.	Change Order No. 1 - Chinchor Electric	Change Order No. 1 - Chinchor Electric.pdf

4.	Agreement_Construction Contract_city of PO & Chinchor Electric 8-2-22	Agreement_Construction Contract_city of PO & Chinchor Electric 8-2-22.pdf
5.	Notice to Proceed	Notice to Proceed.pdf
6.	Chinchor Elec - Affidavit for Human Trafficking 9.24.2024	Chinchor Elec - Affidavit for Human Trafficking 9.24.2024.pdf
7.	City of Port Orange COI 08.2024-08.2025 ITB #22-07	City of Port Orange COI 08.2024-08.2025 ITB #22-07.pdf

Julia Wiggins	Created/Initiated - 1/30/2025
Richard Colby	Approved - 1/30/2025
Junos Reed	Approved - 2/10/2025
John McKinney	Approved - 2/13/2025
Linda Truitt	Approved - 2/16/2025
Matthew Jones	Approved - 2/18/2025
Wayne Clark	Final Approval - 3/7/2025

CHANGE ORDER NO. 2
To the EJCDC Agreement, Dated August 2, 2022
CHINCHOR ELECTRIC, INC., Contractor

Project: Water Treatment Plant (WTP) Generator Replacement
ITB 22-07

The following changes are hereby made to the Contract Documents:

CHANGE IN CONTRACT PRICE:	**CHANGE IN CONTRACT TIMES**:
Original Contract Price: $4,437,330.00 Authorized contingency Fee: $50,000.00 Total Amount: $4,425,330.00	Original Contract Times: Notice to Proceed (NTP) Issued: July 24, 2023 Substantial Completion: 400 days from issuance of NTP: August 26, 2024 Final Completion 430 days from issuance of NTP: September 25, 2024
Net changes from previous Change Order: No. 1: $122,879.68	Changes in contract time from previous Change Orders: No. 1: 90 days
Contract Price prior to this Change Order: $4,548,209.68	Contract Completion Date prior to this Change Order: Substantial Completion: November 24, 2024 Final Completion: December 24, 2024
Net Increase (decrease) of this Change Order: No. 2 $0	Changes in contract time requested this Change Order: No. 2 180 days
Contract Price with all approved Change Orders: 4,548,209.68	Contract Times with all approved Change Orders: Substantial Completion: May 23, 2025 Final Completion: June 22, 2025

CHANGES ORDERED:

I. GENERAL: This Change Order is necessary to cover changes in the work to be performed under the EJCDC Agreement entered into by and between the parties on August 2, 2022.

II. REQUIRED CHANGES: Change Order is necessary to provide an additional 180 days to the final completion date. No goods shall be delivered, nor services commenced hereunder until this Change Order has been fully executed by all parties.

III. JUSTIFICATION: Change Order No 2 is necessary to add 180 days to move the Final Completion date from December 24, 2024 to June 22, 2025. The time extension request is due to extended lead times on electrical equipment. There is no additional cost associated with this extension.

IV. PAYMENT: Payment for this Change Order shall be made in accordance with the terms of the EJCDC Agreement subject to a limit not to exceed $4,548,209.69. All payments shall be governed by the Local Government Prompt Payment Act as set forth in Florida Statutes Section 218.70 through 218.79, as amended.

V. This Change Order may be executed in one or more counterparts, each of which shall be deemed to be an original but all of which together shall constitute one and the same instrument. The delivery by facsimile or e-mail of an executed copy of this Change Order shall be deemed valid as if an original signature was delivered. No contract shall be formed between the Contractor and the City until the City signs this Change Order.

Acknowledgments:

The aforementioned change, and work affected thereby, is subject to all provisions of the original contract not specifically changed by this Change Order;

It is expressly understood and agreed that the approval of the Change Order shall have no effect on the original contract other than matters expressly provided herein;

The prices quoted are fair and reasonable and in proper ratio to the cost of the original work contracted for under competitive bidding; and,

The change in price and/or delivery date described is considered to be fair and reasonable and has been mutually agreed upon in full agreement and final settlement of all claims arising out of this modification including all claims for delays and disruptions resulting from, caused by, or incident to such modifications and change orders.

RECOMMENDED BY: **RICHARD COLBY** Construction Manager	ACCEPTED BY: **TIMOTHY I. CHINCHOR** Chinchor Electric, Inc.
By:_____ Richard Colby, Construction Manager	By:_____ Timothy I. Chinchor, President
Date Signed:_____	Date Signed:_____
RECOMMENDED BY: **N/A** City's Representative	RECOMMENDED BY: **N/A** Engineer of Record
By:_____ Printed Name:_____ Title:_____	By:_____ Printed Name:_____ Title:_____
Date Signed:_____	Date Signed:_____

APPROVED BY:
CITY OF PORT ORANGE
Department Head

By:_____
Junos Reed, City Engineer

Date Signed:_____

City Manager

By:_____
Wayne Clark, City Manager

Date Signed:_____

If Council approval is required:

Affirmed:

By:_____
Scott Stiltner, Mayor

_____
Robin L. Fenwick, MMC, City Clerk

Date Signed:_____

Date Signed:_____

Wiggins, Julia

From: Reed, Junos
Sent: Wednesday, January 29, 2025 7:56 AM
To: Wiggins, Julia
Subject: Fw: [EXT] RE: Revised NTP

See below.

From: Kevin Brand <kbrand@chinchorelectric.com>
Sent: Wednesday, January 29, 2025 7:53:03 AM
To: Parnell, Steve <sparnell@port-orange.org>; noah.adamoski@meadhunt.com <noah.adamoski@meadhunt.com>; karen.gimbel@meadhunt.com <karen.gimbel@meadhunt.com>
Cc: Reed, Junos <jureed@port-orange.org>
Subject: RE: [EXT] RE: Revised NTP

Team,

As previously discussed, Chinchor is requesting a contract extension for the Garnsey WTP Generator replacement due to extended lead times on electrical equipment, which have significantly delayed the project. At this time, I'm requesting an additional 180 days to extend the project timeline to the end of April.

Please let me know if you need any further information from me.

Respectfully,

Kevin Brand
Electrical Operations Manager | State Certified Master Electrician | EC13007772

Chinchor Electric, Inc.
1460 S. Leavitt Ave.
Orange City, FL 32763
Kbrand@chinchorelectric.com
P: 386-774-1020 ext.207
C: 386-216-6835
www.chinchorelectric.com We're hiring!

CHINCHOR ELECTRIC INC.
EC0002457 & EC13004865

CHANGE ORDER NO. 1
To the Construction Contract (EJCDC), dated August 2, 2022
CHINCHOR ELECTRIC, INC., Contractor

Project: Water Treatment Plant (WTP) Generator Replacement (SSP018)

The following changes are hereby made to the Contract Documents:

CHANGE IN CONTRACT PRICE:	**CHANGE IN CONTRACT TIMES:**
Original Contract Price: Contract Award: $4,375,330.00 Authorized contingency Fee: $50,000.00 Total Amount: $4,425,330.00	Original Contract Times: Notice to Proceed (NTP) Issued: July 24, 2023 Substantial Completion 400 days from issuance of NTP: August 26, 2024 Final Completion 430 days from issuance of NTP: September 25, 2024
Net changes from previous Change Order: N/A	Changes in contract time from previous Change Orders: N/A
Contract Price prior to this Change Order: $4,425,330.00	Contract Completion Date prior to this Change Order: September 25, 2024
Net Increase (decrease) of this Change Order: No. 1 $122,879.68	Changes in contract time requested this Change Order: No. 1 90 days
Contract Price with all approved Change Orders: $4,548,209.68	Contract Times with all approved Change Orders: Final Completion: December 24, 2024

CHANGES ORDERED:

I. GENERAL: This Change Order is necessary to cover changes in the work to be performed under the Construction Agreement entered into by and between the parties on August 2, 2022.

II. REQUIRED CHANGES: Change Order is necessary to provide additional spending authorization for repairs to the electrical building and to provide an additional 90 days to the final completion date. No goods shall be delivered, nor services commenced hereunder until this Change Order has been fully executed by all parties.

III. JUSTIFICATION: Change Order No 1 is necessary for to replace the roof, roof purlins, rafters, structural columns, and gutter for the remodeled electrical room. Due to the additional repairs, an additional 90 days will be needed to complete project.

IV. PAYMENT: Payment for this Change Order shall be made in accordance with the terms of the Construction Agreement (EJCDC) subject to a limit not to exceed $122,879.68, revised contract not to exceed $4,548,209.69. All payments shall be governed by the Local Government Prompt Payment Act as set forth in Florida Statutes Section 218.70 through 218.79, as amended.

V. This Change Order may be executed in one or more counterparts, each of which shall be deemed to be an original but all of which together shall constitute one and the same instrument. The delivery by facsimile or e-mail of an executed copy of this Change Order shall be deemed valid as if an original signature was delivered. No contract shall be formed between the Contractor and the City until the City signs this Change Order.

Acknowledgments:

The aforementioned change, and work affected thereby, is subject to all provisions of the original contract not specifically changed by this Change Order;

It is expressly understood and agreed that the approval of the Change Order shall have no effect on the original contract other than matters expressly provided herein;

The prices quoted are fair and reasonable and in proper ratio to the cost of the original work contracted for under competitive bidding; and,

The change in price and/or delivery date described is considered to be fair and reasonable and has been mutually agreed upon in full agreement and final settlement of all claims arising out of this modification including all claims for delays and disruptions resulting from, caused by, or incident to such modifications and change orders.

RECOMMENDED BY:
RICHARD COLBY
Construction Manager

By: _____
Richard Colby, Construction Manager

Date Signed: 05/08/2024

ACCEPTED BY:
TIMOTHY I. CHINCHOR
Chinchor Electric, Inc.

By: _____
Timothy I. Chinchor, President

Date Signed: 05/06/2024

RECOMMENDED BY:
N/A
City's Representative

By: N/A
Printed Name: _____
Title: _____

Date Signed: N/A

RECOMMENDED BY:
N/A
Engineer of Record

By: N/A
Printed Name: _____
Title: _____

Date Signed: N/A

APPROVED BY:
CITY OF PORT ORANGE
Department Head

By: _____
Junos Reed, City Engineer

Date Signed: 5/8/2024

City Manager

By: N/A
Wayne Clark, City Manager

Date Signed: _____

If Council approval is required:

By: _____
Donald O. Burnette, Mayor

Date Signed: 5/21/2024

Affirmed: _____
Robin L. Fenwick, MMC, City Clerk

Date Signed: 5/21/2024

AGREEMENT
BETWEEN OWNER AND CONTRACTOR
FOR CONSTRUCTION CONTRACT (STIPULATED PRICE)

THIS AGREEMENT is by and between **City of Port Orange**
1000 City Center Circle
Port Orange, Florida 32129 ("Owner") and
Chinchor Electric, Inc.
1460 South Leavitt Avenue
Orange City, Florida 32763 ("Contractor").

The Effective Date of this Agreement shall be _____ (If no date is specified then the Effective Date shall be the date on which the Agreement is signed by the last of the two parties.)

Owner and Contractor hereby agree as follows:

ARTICLE 1 - WORK

1.01 Contractor shall complete all Work as specified or indicated in the Contract Documents. The Work is generally described as follows:

1.02 *Installation of one (1) new generator, one (1) new switchgear assembly, one (1) new fuel tank with associated fuel supply and return piping and valves, two (2) MCC and a new electrical room.*

ARTICLE 2 – THE PROJECT

2.01 The Project for which the Work under the Contract Documents may be the whole or only a part is generally described as follows:

ITB 22-07 Garnsey Water Plant Generator Installation

ARTICLE 3 – ENGINEER

3.01 *The part of the Project that pertains to the Work has been designed by the Project Engineer, Brad Blais, P.E. ("Engineer") and Keff Kurella, P.E. ("Engineer"), and shall act as Owner's representatives, assume all duties and responsibilities, and have the rights and authority assigned to Engineer in the Contract Documents in connection with the completion of the Work in accordance with the Contract Documents.*

ARTICLE 4 – CONTRACT TIMES

4.01 *Time of the Essence*

A. All time limits for Substantial Completion and Final Completion as stated in the Contract Documents, particularly Paragraph 4.02 below, are of the essence of the Contract.

B. All time limits for Milestone dates set forth in the Contract Documents are of the essence of the Contract.

Copyright © 2007 National Society of Professional Engineers for EJCDC. All rights reserved.

4.02 *Days to Achieve Substantial Completion and Final Completion*

A. Unless as otherwise modified in a Notice to Proceed issued after the Effective Date of the Agreement or an allowable extension of time in accordance with Paragraph 12.02 of the General Conditions, the Work shall be substantially completed within 400 days after the Effective Date of the Agreement.

B. Unless as otherwise modified in a Notice to Proceed issued after the Effective Date of the Agreement or an allowable extension of time in accordance with Paragraph 12.02 of the General Conditions, the Work shall be finally completed in accordance with Paragraph 14.06 of the General Conditions within 430 days after the Effective Date of the Agreement.

C. If a Notice to Proceed is issued more than 60 days from the Effective Date of this Agreement, then the dates for Substantial Completion and the Final Completion shall be extended by the same number of days. (For example, if the Notice to Proceed is issued 63 days after the Effective Date of the Agreement, then the Substantial Completion and Final Completion dates shall be extended by 63 days.)

4.03 *Liquidated Damages*

A. Contractor and Owner agree and recognize that time is of the essence as stated in Paragraph 4.01 above and that Owner will suffer financial loss that is not readily ascertainable as of the Effective Date of this Agreement if the Work is delayed and not Substantially Completed within the time period specified in Paragraph 4.02 above, plus any allowable extension of time in accordance with Paragraph 12.02 of the General Conditions. Contractor agrees and recognizes that any delay to Substantial Completion shall constitute a material breach. Accordingly, Owner and Contractor agree that as liquidated damages for delay, Contractor shall pay Owner $0.00 for each day that expires after the date the Work is required to be Substantially Completed until the Contractor achieves Substantial Completion with the Work. Contractor and Owner agree and recognize that the liquidated damages set forth herein shall not be treated as a penalty and are just damages that are proportionate to any damages that might reasonably be expected to follow from a delay to Substantial Completion.

B. Owner may withhold Contractor's final payment in order offset the liquidated damages that Contractor owes Owner. Owner may also withhold progress payments if Owner reasonably believes that Contractor's final payment will not sufficiency cover the liquidated damages that Contractor owes Owner.

ARTICLE 5 – CONTRACT PRICE

5.01 Owner shall pay Contractor for completion of the Work in accordance with the Contract Documents an amount in current funds equal to the sum of the amounts determined pursuant to Paragraphs 5.01.A, 5.01.B, and 5.01.C below:

A. For all Work other than Unit Price Work, a lump sum of: $_____

Any allowances specifically identified and called for in the Contract Documents are included in the above price in accordance with Paragraph 11.02 of the General Conditions.

Copyright © 2007 National Society of Professional Engineers for EJCDC. All rights reserved.

B. For all Unit Price Work in accordance with Paragraph 11.03 of the General Conditions, an amount equal to the sum of the established unit price for each separately identified item of Unit Price Work times the actual quantity of that item:

UNIT PRICE WORK

Item No.	Description	Unit	Estimated Quantity	Bid Unit Price	Bid Price

See Attachments

Total of all Bid Prices (Unit Price Work) $4,375,330.00

The Bid Unit Prices set forth above are guaranteed prices. Although the Estimated Quantities are estimates and may increase or decrease based on determinations of Engineer, Contractor agrees and understands that the Bid Unit Prices shall remain the same irrespective of the quantities. Contractor understands that in agreeing to any Bid Unit Price it is agreeing to bear the risk associated with any material price increase or escalation. Owner agrees and understands that in agreeing to any Bid Unit Price it is agreeing to bear the risk associated with any material price decrease or reduction.

C. For all Work, at the prices stated in Contractor's Bid, attached hereto as an exhibit.

ARTICLE 6 – PAYMENT PROCEDURES

6.01 *Submittal and Processing of Progress Payments*

A. Contractor shall submit Applications for Payment in accordance with Article 14 of the General Conditions.

6.02 *Progress Payments; Retainage*

A. Progress payments shall be made on account of the Contract Price on the basis of Contractor's Applications for Payment during performance of the Work in accordance with Paragraph 14.02 of the General Conditions. All such payments will be measured by the schedule of values established as provided in Paragraph 2.07.A of the General Conditions (and in the case of Unit Price Work based on the number of units completed). Progress payments will be made in an amount equal to the percentage of the Work completed in accordance with the Schedule of Values, less the aggregate of payments previously made, less the retainage, and less such amounts as Engineer may determine Owner may withhold, including, but not limited to, liquidated damages.

B. Owner shall withhold Five percent (5%) of each progress payment as retainage.

6.03 *Final Payment*

A. Final Payment inclusive of retainage shall be made to Contractor in accordance with Paragraph 14.07 of the General Conditions.

Copyright © 2007 National Society of Professional Engineers for EJCDC. All rights reserved.

ARTICLE 7 – INTEREST

7.01 All monies not paid in strict accordance with Florida Statute §218.735 shall bear interest as provided for therein.

ARTICLE 8 – CONTRACTOR'S REPRESENTATIONS

8.01 In order to induce Owner to enter into this Agreement and in determining the Contract Price, Contractor makes the following representations:

A. Contractor has carefully examined and carefully studied the Contract Documents and the other related data identified in the Bidding Documents.

B. Contractor has visited the Site and become familiar with and is satisfied as to the general, local, and Site conditions that may affect cost, progress, and performance of the Work.

C. Contractor is familiar with and is satisfied as to all federal, state, and local Laws and Regulations that may affect cost, progress, and performance of the Work.

D. Contractor has carefully studied all: (1) reports of explorations and tests of subsurface conditions at or contiguous to the Site and all drawings of physical conditions relating to existing surface or subsurface structures at the Site (except Underground Facilities), if any, that have been identified in Paragraph SC-4.02 of the Supplementary Conditions as containing reliable "technical data," and (2) reports and drawings of Hazardous Environmental Conditions, if any, at the Site that have been identified in Paragraph SC-4.06 of the Supplementary Conditions as containing reliable "technical data." Contractor's receipt and study of such reports shall not relieve it of visiting the Site and becoming familiar with and satisfied with the Site conditions that may affect cost, progress, and performance of the Work.

E. Contractor has considered the information known to Contractor; information commonly known to contractors doing business in the locality of the Site; information and observations obtained from visits to the Site; the Contract Documents; and the Site-related reports and drawings identified in the Contract Documents, with respect to the effect of such information, observations, and documents on (1) the cost, progress, and performance of the Work; (2) the means, methods, techniques, sequences, and procedures of construction to be employed by Contractor, including any specific means, methods, techniques, sequences, and procedures of construction expressly required by the Contract Documents; and (3) Contractor's safety precautions and programs.

F. Based on the information and observations referred to in Paragraph 8.01.E above, Contractor does not consider that further examinations, investigations, explorations, tests, studies, or data are necessary for the performance of the Work at the Contract Price, within the Contract Times, and in accordance with the other terms and conditions of the Contract Documents.

G. Contractor is aware of the general nature of work to be performed by Owner and others at the Site that relates to the Work as indicated in the Contract Documents.

Copyright © 2007 National Society of Professional Engineers for EJCDC. All rights reserved.

H. Contractor has given Engineer written notice of all conflicts, errors, ambiguities, or discrepancies that Contractor has discovered in the Contract Documents, and the written resolution thereof by Engineer is acceptable to Contractor.

I. The Contract Documents are generally sufficient to indicate and convey understanding of all terms and conditions for performance and furnishing of the Work.

ARTICLE 9 – CONTRACT DOCUMENTS

9.01 *Contents*

A. The Contract Documents consist of the following:

1. This Agreement (pages 1 to 10, inclusive).
2. Combination Payment and Performance Bond (pages 1 to 4, inclusive).
3. General Conditions (pages 1 to 69, inclusive).
4. Supplementary Conditions (pages 1 to 7, inclusive).
5. Technical Specifications – 100% Submittal as listed in ITB 22-07 "Attachment 2" Garnsey Water Plant Generator Installation, as identified in "Section 3 - Specifications" (pages 1 to 297, not attached, on file with Junos Reed, P.E., City Engineering and Construction Manager).
6. BID # 22-07 BID SET April 2022, as listed in ITB 22-07 "Attachment 3" Garnsey Water Plant Generator Installation, as identified in "Section 3 – "Specifications" (pages 1 to 24, not attached, on file with Junos Reed, P.E., City Engineering and Construction Manager).
7. Addendum No. 1 (page 1, inclusive).
8. Addendum No. 2 (pages 1 to 5, inclusive).
9. Addendum No. 3 (pages 1 to 2, inclusive).
10. Exhibits to this Agreement (enumerated as follows):
    a. Exhibit No. 1 Contractor's Bid Schedule of Unit Prices (page 1, inclusive).
    b. Documentation submitted by Contractor prior to Notice of Award (N/A).
        1. Affidavit Regarding Workers' Compensation (page 1, inclusive).
        2. Leased Employee Affidavit Exhibit (page 1, inclusive).
    c. Exhibit No. 2 Contractor's Proposal (pages 1 to 57, inclusive).

Copyright © 2007 National Society of Professional Engineers for EJCDC. All rights reserved.

d. Composite Exhibit No. 3 City's Invitation to Bid Request No. 22-07 (pages 1 to 146, not attached, on file with office of the City Clerk).

11. The following which may be delivered or issued on or after the Effective Date of the Agreement and are not attached hereto:

a. Notice to Proceed (pages _____ to _____, inclusive).

b. Work Change Directives.

c. Change Orders.

B. The documents listed in Paragraph 9.01.A are attached to this Agreement (except as expressly noted otherwise above).

C. There are no Contract Documents other than those listed above in this Article 9.

D. The Contract Documents may only be amended, modified, or supplemented as provided in Paragraph 3.04 of the General Conditions.

ARTICLE 10 – MISCELLANEOUS

10.01 *Terms*

A. Terms used in this Agreement will have the meanings stated in the General Conditions and the Supplementary Conditions.

10.02 *Assignment of Contract*

A. No assignment by a party hereto of any rights under or interests in the Contract will be binding on another party hereto without the written consent of the party sought to be bound; and, specifically but without limitation, moneys that may become due and moneys that are due may not be assigned without such consent (except to the extent that the effect of this restriction may be limited by law), and unless specifically stated to the contrary in any written consent to an assignment, no assignment will release or discharge the assignor from any duty or responsibility under the Contract Documents.

10.03 *Successors and Assigns*

A. Owner and Contractor each binds itself, its partners, successors, assigns, and legal representatives to the other party hereto, its partners, successors, assigns, and legal representatives in respect to all covenants, agreements, and obligations contained in the Contract Documents.

10.04 *Severability*

A. Any provision or part of the Contract Documents held to be void or unenforceable under any Law or Regulation shall be deemed stricken, and all remaining provisions and parts shall continue to be valid and binding upon Owner and Contractor, who agree that the Contract

Copyright © 2007 National Society of Professional Engineers for EJCDC. All rights reserved.

Documents shall be reformed to replace such stricken provision or part thereof with a valid and enforceable provision or part that comes as close as possible to expressing the intention of the stricken provision.

10.05 *Contractor's Certifications*

A. Contractor certifies that it has not engaged in corrupt, fraudulent, collusive, or coercive practices in competing for or in executing the Contract. For the purposes of this Paragraph 10.05:

1. "corrupt practice" means the offering, giving, receiving, or soliciting of any thing of value likely to influence the action of a public official in the bidding process or in the Contract execution;

2. "fraudulent practice" means an intentional misrepresentation of facts made (a) to influence the bidding process or the execution of the Contract to the detriment of Owner, (b) to establish Bid or Contract prices at artificial non-competitive levels, or (c) to deprive Owner of the benefits of free and open competition;

3. "collusive practice" means a scheme or arrangement between two or more Bidders, with or without the knowledge of Owner, a purpose of which is to establish Bid prices at artificial, non-competitive levels; and

4. "coercive practice" means harming or threatening to harm, directly or indirectly, persons or their property to influence their participation in the bidding process or affect the execution of the Contract.

B. Contractor certifies that in the event a Lien is recorded on the Project by any person or entity providing labor, services, or materials with respect to any portion of the Work, it will immediately transfer such lien to its payment bond or take other appropriate action to immediately remove the encumbrance.

Copyright © 2007 National Society of Professional Engineers for EJCDC. All rights reserved.

10.06 *No-Damage-for-Delay*

A. Contractor shall not be entitled to any damages (including, without limitation, expenses, costs, fees, extended field overhead and general conditions, equipment costs, home office overhead, lost productivity and inefficiency damages, additional payroll and labor costs, etc.) for any delay to its Work. Contractor's sole and exclusive remedy for a delay to its Work that is not caused by Contractor (or a person or entity performing a portion of Contractor's scope of Work) shall be an extension of time to substantially complete and finally complete the Project; provided, however, that Owner granting Contractor an extension of time is not a condition precedent to this no-damage-for-delay provision. Contractor shall also not be entitled to any damages for disruption or interference to its Work or for having to accelerate or incur additional labor or payroll costs in order to make up or overcome a delay to its Work so that it can maintain the dates for Substantial Completion and Final Completion. Contractor agrees that in determining and agreeing to the Contract Price it considered this no-damage-for-delay provision and understands that it is not entitled to any damages whatsoever for a delay to its Work.

10.07 *No Intended Third-Party Beneficiaries*

A. There are no intended third-party beneficiaries to the Contract.

Copyright © 2007 National Society of Professional Engineers for EJCDC. All rights reserved.

IN WITNESS WHEREOF, Owner and Contractor have signed this Agreement. Counterparts have been delivered to Owner and Contractor. All portions of the Contract Documents have been signed or have been identified by Owner and Contractor or on their behalf.

CITY OF PORT ORANGE
Owner

By: Donald O. Burnette

Title: Mayor

Date: 8/2/2022

Attest: Robin L. Fenwick, MMC

Title: City Clerk

Address for giving notices:
1000 City Center Circle
Port Orange, Florida 32129
(386) 506-5500

Copyright © 2007 National Society of Professional Engineers for EJCDC. All rights reserved.

Chinchor Electric, Inc.
Contractor

By: Timothy I. Chinchor

Title: President

Date: 7/19/22

Attest: Katya Quintana

Title: Corporate Secretary

Address for giving notices:
1460 South Leavitt Avenue
Orange City, Florida 32763
Telephone: (386) 774-1020 E-Mail: dhasco@chinchorelectric.com

License No.: EC13004865

Copyright © 2007 National Society of Professional Engineers for EJCDC. All rights reserved.

CITY OF PORT ORANGE
NOTICE TO PROCEED

Issued By: **Richard A Colby, Project Manager**
Public Works and Utilities
1395 Dunlawton Ave.
Port Orange, FL 32129
Ph:(386)506-5754
jureed@port-orange.org

Issued To: Chinchor Electric, Inc.
1460 South Leavitt Ave
Orange City, FL 32763

PROJECT TITLE: **ITB 22-07 Garnsey Water Treatment Plant Generator Installation**
PO NO. **PO-002310**

This **Notice to Proceed** issued to your company is for the above referenced project and in accordance with the Standard Contract for Garnsey Water Treatment Plant Generator Installation and COPO ITB 22-07 dated August 2, 2022, and all terms and conditions of the agreement between the City of Port Orange and Chinchor Electric, INC. The **effective date** of this **Notice to Proceed** July 24, 2023, with a **Substantial Completion** date of August 26, 2024, and a **Final Completion** by September 25, 2024.

Please sign below acknowledging and agreeing to the contents of this Notice to Proceed and return a copy of this form to the Richard A Colby, Construction Manager via email and the original to the address below:

All future correspondence or requests for changes to the contract must be addressed to the Director.

ISSUED BY:

Owner: City of Port Orange

This 24th day of July,2023.

By: _____
Richard A Colby

Title: Construction Manager

ACCEPTANCE NOTICE:

Receipt of the foregoing Notice to Proceed is hereby acknowledged and agreed by:

Company: Chinchor Electric, Inc.

This 20th day of September 2023

By: Donald J Hasco
Digitally signed by Donald J Hasco
Date: 2023.09.20 16:24:23 -04'00'

Title: Director of Operations

HUMAN TRAFFICKING AFFIDAVIT
(SECTION 787.06, FLORIDA STATUTES)

STATE OF Florida §
§
COUNTY OF Volusia §

The undersigned ("Affiant"), on behalf of the entity listed below ("Entity"), after being duly sworn, hereby attests as follows:

1. My name is Mariah Anselmo. I am over the age of Twenty-one years old. I am the Vice President (Title) of Chinchor Electric, Inc. (Business Name), a non-governmental entity which does business in the State of Florida, hereinafter called the "Entity."

2. I have personal knowledge of each and every statement of fact contained herein, and each and every statement of fact is true and correct.

3. Entity does not use coercion, as defined in Section 787.06, Florida Statutes, for labor or services.

4. The undersigned is an officer or representative of the entity and is authorized to execute this affidavit on behalf of the Entity.

5. Under penalties of perjury, I declare that I have read the foregoing Human Trafficking Affidavit and that the facts stated herein are true.

Further Affiant sayeth not.

Date: September 24, 2024

Signed: _____

Print Name: Mariah Anselmo

Title: Vice President

SUBSCRIBED AND SWORN before me by means of [x] physical presence or [__] online notarization on the 24th day of September, 2024 by Mariah Anselmo as Vice President on behalf of Chinchor Electric, Inc. who is personally known to me or who has produced Self as identification.

(Notary Seal)

MEGAN BARRIO
Notary Public
State of Florida
Comm# HH409770
Expires 6/13/2027

_____
Notary Public, State of 06/13/2027
Printed name, commission and expiration of commission term

SKB.7.8.2024. Rev. 9.6.2024
CA7985

CERTIFICATE OF LIABILITY INSURANCE

DATE (MM/DD/YYYY): 08/22/2024

THIS CERTIFICATE IS ISSUED AS A MATTER OF INFORMATION ONLY AND CONFERS NO RIGHTS UPON THE CERTIFICATE HOLDER. THIS CERTIFICATE DOES NOT AFFIRMATIVELY OR NEGATIVELY AMEND, EXTEND OR ALTER THE COVERAGE AFFORDED BY THE POLICIES BELOW. THIS CERTIFICATE OF INSURANCE DOES NOT CONSTITUTE A CONTRACT BETWEEN THE ISSUING INSURER(S), AUTHORIZED REPRESENTATIVE OR PRODUCER, AND THE CERTIFICATE HOLDER.

IMPORTANT: If the certificate holder is an ADDITIONAL INSURED, the policy(ies) must have ADDITIONAL INSURED provisions or be endorsed. If SUBROGATION IS WAIVED, subject to the terms and conditions of the policy, certain policies may require an endorsement. A statement on this certificate does not confer rights to the certificate holder in lieu of such endorsement(s).

PRODUCER	CONTACT NAME: Jamie Hanrahan	
Brown & Brown Insurance Services, Inc. P.O. Box 2412 Daytona Beach FL 32115-2415	PHONE (A/C, No, Ext): (386) 239-8882	FAX (A/C, No): (386) 323-9198
	E-MAIL ADDRESS: Jamie.Hanrahan@bbrown.com	

INSURED	INSURER(S) AFFORDING COVERAGE	NAIC #
CHINCHOR ELECTRIC, INC. 1460 SOUTH LEAVITT AVE. ORANGE CITY FL 32763	INSURER A : Imperium Insurance Co	35408
	INSURER B : XL Specialty Insurance Company	37885
	INSURER C : Bridgefield Casualty Insurance Company	10335
	INSURER D : LLoyd's of London	85202
	INSURER E : Columbia Casualty Company	31127
	INSURER F : Travelers Casualty and Surety Company of America	31194

COVERAGES **CERTIFICATE NUMBER:** 24-25 **REVISION NUMBER:**

THIS IS TO CERTIFY THAT THE POLICIES OF INSURANCE LISTED BELOW HAVE BEEN ISSUED TO THE INSURED NAMED ABOVE FOR THE POLICY PERIOD INDICATED. NOTWITHSTANDING ANY REQUIREMENT, TERM OR CONDITION OF ANY CONTRACT OR OTHER DOCUMENT WITH RESPECT TO WHICH THIS CERTIFICATE MAY BE ISSUED OR MAY PERTAIN, THE INSURANCE AFFORDED BY THE POLICIES DESCRIBED HEREIN IS SUBJECT TO ALL THE TERMS, EXCLUSIONS AND CONDITIONS OF SUCH POLICIES. LIMITS SHOWN MAY HAVE BEEN REDUCED BY PAID CLAIMS.

INSR LTR	TYPE OF INSURANCE	ADDL INSD	SUBR WVD	POLICY NUMBER	POLICY EFF (MM/DD/YYYY)	POLICY EXP (MM/DD/YYYY)	LIMITS	
A	[X] COMMERCIAL GENERAL LIABILITY [ ] CLAIMS-MADE [X] OCCUR [X] XCU INCLUDED GEN'L AGGREGATE LIMIT APPLIES PER: [ ] POLICY [X] PRO-JECT [ ] LOC [ ] OTHER:	Y		CON-IIC-GL-0000087-02	08/30/2024	08/30/2025	EACH OCCURRENCE DAMAGE TO RENTED PREMISES (Ea occurrence) MED EXP (Any one person) PERSONAL & ADV INJURY GENERAL AGGREGATE PRODUCTS - COMP/OP AGG [ ]	$ 1,000,000 $ 100,000 $ 5,000 $ 1,000,000 $ 2,000,000 $ 2,000,000 $
A	AUTOMOBILE LIABILITY [X] ANY AUTO [ ] OWNED AUTOS ONLY [ ] SCHEDULED AUTOS [ ] HIRED AUTOS ONLY [ ] NON-OWNED AUTOS ONLY	Y		CON-IIC-CA-0000248-02	08/30/2024	08/30/2025	COMBINED SINGLE LIMIT (Ea accident) BODILY INJURY (Per person) BODILY INJURY (Per accident) PROPERTY DAMAGE (Per accident) PIP-Basic	$ 1,000,000 $ $ $ $ 10,000
A	[ ] UMBRELLA LIAB [X] OCCUR [X] EXCESS LIAB [ ] CLAIMS-MADE [ ] DED [X] RETENTION $ 0			CON-IIC-CX-0000078-02	08/30/2024	08/30/2025	EACH OCCURRENCE AGGREGATE [ ]	$ 5,000,000 $ 5,000,000 $
C	WORKERS COMPENSATION AND EMPLOYERS' LIABILITY ANY PROPRIETOR/PARTNER/EXECUTIVE OFFICER/MEMBER EXCLUDED? (Mandatory in NH) Y / N: N If yes, describe under DESCRIPTION OF OPERATIONS below	N / A	Y	196-55876	08/30/2024	08/30/2025	[X] PER STATUTE [ ] OTH-ER E.L. EACH ACCIDENT E.L. DISEASE - EA EMPLOYEE E.L. DISEASE - POLICY LIMIT	 $ 1,000,000 $ 1,000,000 $ 1,000,000
B	INLAND MARINE	Y		UM00058950MA24A	08/30/2024	08/30/2025	RENTED EQUIPMENT INSTALLATION	$100,000 $500,000

DESCRIPTION OF OPERATIONS / LOCATIONS / VEHICLES (ACORD 101, Additional Remarks Schedule, may be attached if more space is required)

SEE NOTES FOR POLICY COVERAGE FORMS
RE: GARNSEY WATER TREATMENT PLANT GENERATOR INSTALLATION ITB #22-07
CITY OF PORT ORANGE IS ADDITIONAL INSURED AND WAIVER OF SUBROGATION APPLIES AS REQUIRED BY WRITTEN CONTRACT AND IF APPLICABLE, PER THE FORMS LISTED ON THE ATTACHED ADDITIONAL REMARKS SCHEDULE. CITY OF PORT ORANGE IS ADDITIONAL INSURED ON THE INSTALLATION FLOATER PER FORM HBM050 0612.
30 DAY NOTICE OF CANCELLATION, EXCEPT FOR NON-PAYMENT OF PREMIUM, WILL BE PROVIDED TO THE CERTIFICATE HOLDER BY THE CARRIER FOR GENERAL LIABILITY, AUTO LIABILITY, WORKERS COMPENSATION AND UMBRELLA LIABILITY POLICIES.

CERTIFICATE HOLDER

CITY OF PORT ORANGE
1000 CITY CENTER CIRCLE
PORT ORANGE FL 32129

CANCELLATION

SHOULD ANY OF THE ABOVE DESCRIBED POLICIES BE CANCELLED BEFORE THE EXPIRATION DATE THEREOF, NOTICE WILL BE DELIVERED IN ACCORDANCE WITH THE POLICY PROVISIONS.

AUTHORIZED REPRESENTATIVE

© 1988-2015 ACORD CORPORATION. All rights reserved.

AGENCY CUSTOMER ID: _____

LOC #: _____

ADDITIONAL REMARKS SCHEDULE

AGENCY	NAMED INSURED
Brown & Brown Insurance Services, Inc.	CHINCHOR ELECTRIC, INC.
POLICY NUMBER	
CARRIER / NAIC CODE	EFFECTIVE DATE:

ADDITIONAL REMARKS

THIS ADDITIONAL REMARKS FORM IS A SCHEDULE TO ACORD FORM,

FORM NUMBER: 25 **FORM TITLE:** Certificate of Liability Insurance: Notes

INSURER D - PROFESSIONAL/POLLUTION LIABILITY
POLICY NUMBER: B0621PCHIN000224
08/30/2024 TO 08/30/2025
PER OCCURENCE: $1,000,000
AGGREGATE: $2,000,000

INSURER- E - EXCESS LIABILITY
POLICY NUMBER: 7034541076
08/30/2024 TO 08/30/2025
$5,000,000 OCC/$5,000,000 AGG

INSURER F - CYBER LIABILITY
POLICY NUMBER: 107844795
08/30/2024 - 08/30/2025
PER OCCURRENCE: $2,000,000
AGGREGATE: $2,000,000

CURRENT BLANKET POLICY FORMS

GENERAL LIABILITY:
1.) HIIG CG2007 1018 - PER PROJECT AGGREGATE; CAP AMOUNT $15M
2.) CG2010 1219 - ADDITIONAL INSURED - OWNERS, LESSEES OR CONTRACTORS - SCHEDULED PERSON OR ORGANIZATION
3.) CG2037 1219 - ADDITIONAL INSURED – OWNERS, LESSEES OR CONTRACTORS – COMPLETED OPERATIONS
4.) CG2028 1219 - ADDITIONAL INSURED - LESSOR OF LEASED EQUIPMENT
5.) CG2011 1219 - ADDITIONAL INSURED – MANAGERS OR LESSORS OF PREMISES
6.) CG HIIG FL 20 22 0316 - CONTRACTOR BROADENING ENDORSEMENTS (ADDITIONAL INSURED-VENDORS)
7.) CG2032 1219 - ADDITIONAL INSURED – ENGINEERS, ARCHITECTS OR SURVEYORS NOT ENGAGED BY THE NAMED
8.) CG2404 1219 - WAIVER OF TRANSFER OF RIGHTS OF RECOVERY AGAINST OTHERS TO US
9.) CG2001 1219 - PRIMARY AND NONCONTRIBUTORY - OTHER INSURANCE CONDITION
10.) CG 02 24 10 93 - EARLIER NOTICE OF CANCELLATION PROVIDED BY US
11.) CG2417 1001 - CONTRACTUAL LIABILITY - RAILROADS

AUTO LIABILITY:
1.) CA2048 1013 - DESIGNATED INSURED FOR COVERED AUTOS LIABILITY COVERAGE
2.) CA0444 1013 - WAIVER OF TRANSFER OF RIGHTS OF RECOVERY AGAINST OTHERS TO US
3.) CA0449 1116 - PRIMARY AND NONCONTRIBUTORY - OTHER INSURANCE CONDITION
4.) CA 04 22 11 20 - EARLIER NOTICE OF CANCELLATION PROVIDED BY US
5.) CA2070 1013 - COVERAGE FOR CERTAIN OPERATIONS IN CONNECTION WITH RAILROADS
6.) CA 02 02 11 20 - LESSOR - ADDITIONAL INSURED AND LOSS PAYEE

WORKERS COMPENSATION:
1.) WC000313 0484-WAIVER OF OUR RIGHT TO RECOVER FROM THE OTHERS ENDORSEMENT

UMBRELLA LIABILITY:
1.) CX0001 0413 - COMMERCIAL EXCESS LIABILITY COVERAGE FORM (FOLLOW FORM FOR ADDITIONAL INSURED AND WAIVER OF SUBROGATION)
2.) SKWD CS 2058 0522 - PRIMARY AND NONCONTRIBUTORY - OTHER INSURANCE CONDITION
3.) IL1207 0702 - FLORIDA POLICY CHANGES - (3RD PARTY NOTICE OF CANCELLATION)
THE EXCESS POLICY APPLIES IN EXCESS OF THE GENERAL LIABILITY, AUTO LIABILITY AND EMPLOYERS LIABILITY. THE INSURANCE UNDER THIS POLICY WILL FOLLOW THE SAME PROVISIONS, EXCLUSIONS, CONDITIONS AND LIMITATIONS THAT ARE CONTAINED IN THE APPLICABLE CONTROLLING UNDERLYING INSURANCE, UNLESS OTHERWISE DIRECTED BY THIS POLICY.

EQUIPMENT:
1.)HCM050 0112-BLANKET LOSS PAYEE

POLLUTION:
1.)B0621PCHIN000223 - DESIGN BUILD AND CONTRACTORS PROFESSIONAL LIABILITY, CONTRACTORS POLLUTION LIABILITY, CONTRACTORS MICROBIAL CONDITION LIABILITY, TRANSPORTATION POLLUTION LIABILITY, NON-OWNED DISPOSAL SITE TECHNOLOGY BASED SERVICES, EMERGENCY POLLUTION REMEDIATION EXPENSES, DRONE LIABILITY, TECHNOLOGY-BASED SERVICES, TECHNOLOGY PRODUCTS, COMPUTER NETWORK SECURITY, AND MULTIMEDIA AND ADVERTISING AND PRIVACY LIABILITY INSURANCE (ADDITIONAL INSURED, WAIVER OF SUBROGATION)

© 2008 ACORD CORPORATION. All rights reserved.

The ACORD name and logo are registered marks of ACORD

CITY COUNCIL AGENDA ITEM

COUNCIL MEETING DATE 3/18/2025

SUBJECT: (D7) Resolution No. 25-13 - Approval of the Application for a Florida Inland Navigation District (FIND) Waterways Assistance Program Grant for the Construction of a Day Dock at Riverwalk Park

DEPARTMENT: Community Development

GOAL: 2 - Infrastructure
3 - Quality of Life

RECOMMENDED MOTION: Move to approve Resolution No. 25-13 and authorize the City Manager or his designee to sign the application and all other associated documents.

SUMMARY: Each year, the Florida Inland Navigation District (FIND) issues a call to local governments to submit public waterway improvement projects, such as public navigation, public waterway access facilities, waterfront parks, environmental education, and boating safety projects, to be eligible for funding.

In October 2023, the city received a FIND grant to design the Riverwalk Park Day Dock at Riverwalk Park. The design and permitting of the day dock is anticipated to be complete in Summer 2025.

Staff requests City Council approval to apply to FIND for funds to construct a 10-slip day dock at Riverwalk Park to accommodate vessels up to 35 ft. If this project is selected, and the City chooses to fund the construction of the day dock, the project will require a 50% local government match. With this project, the city pays for the construction up front and is reimbursed. The total estimated cost to construct this project is $1,620,520, and the city will be requesting $810,260 from FIND. The construction cost for the dock also includes an estimated $728,000 in mechanical dredging to create an access channel at a minimum depth of -5 ft Mean Low Water from the Intracoastal Waterway (ICW) to the dock. The City's match for this project will be requested in the FY 26-30 Capital Improvement Plan. The approval of this Resolution does not obligate the City to fund this project; it is only for staff to apply to FIND for construction funds. If this project is selected by FIND in the Fall of 2025, construction is anticipated to begin in 2026.

The design for the day dock includes a dock perpendicular to the shoreline for the mooring of up to ten (10) vessels with the potential to add more slips as demand increases and also a stop for future water taxi service.

The design also includes a survey of the waterways that identifies a dredging profile to

create a navigational access channel between the day dock and the adjacent deep-water channel that leads to the Intracoastal Waterway (ICW) along with installation of channel markers from the dock to the existing marked channel. The day dock has been designed to be available for daytime-only mooring of boats; however, electrical conduit will be installed so lighting can be added in the event night use of the dock is desired in the future.

Expansion of the floating dock in the future will require a permit modification for the sovereign submerged land lease (SSLL), to include the additional temporary slips proposed and the additional dredge basin area that may be required. In addition, the relocation of channel markers may be necessary depending on the size of the expansion.

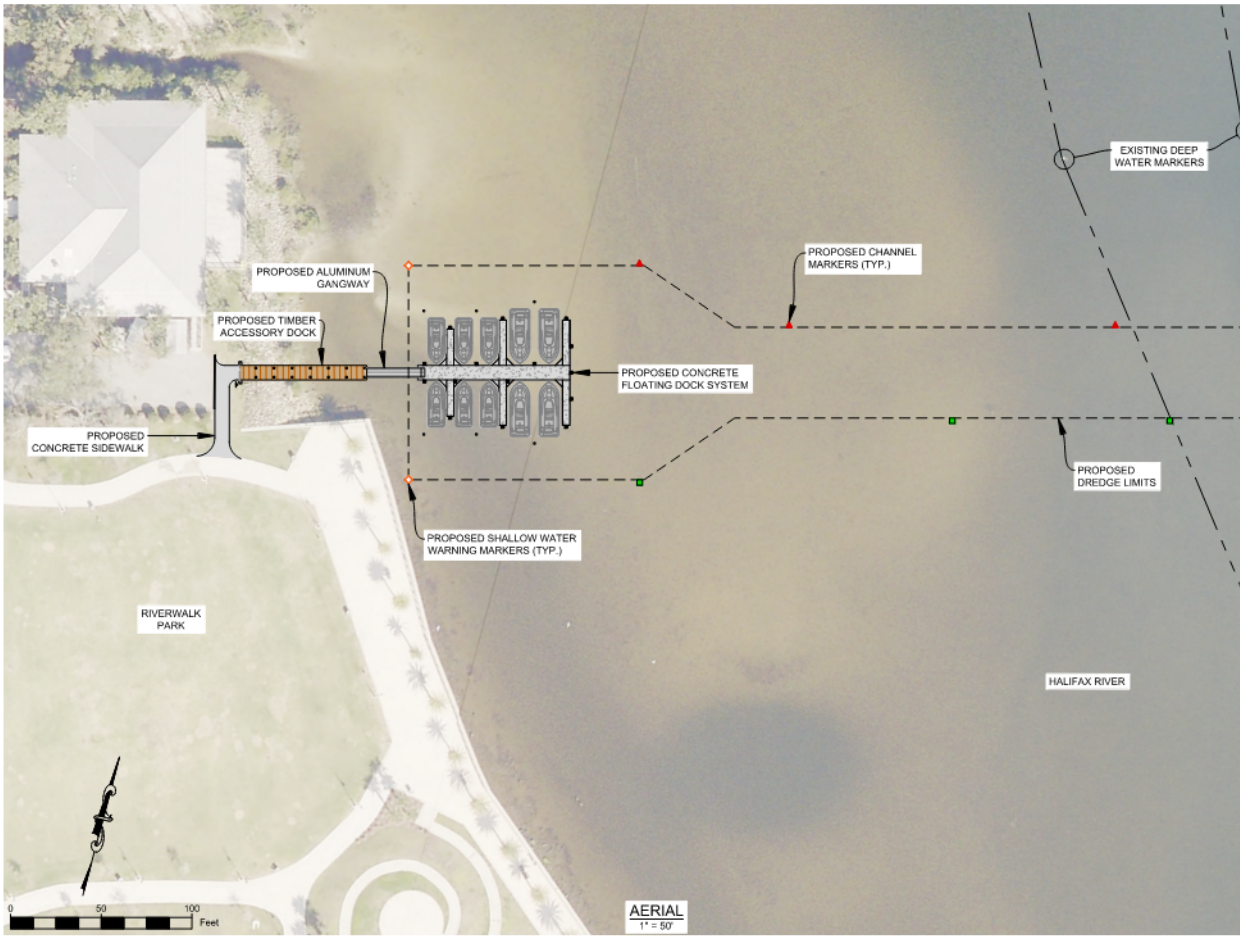

Rendering of Riverwalk Park Day Dock at Riverwalk Park

PRESENTER: Tim Burman

ATTACHMENTS:

1.	Resolution No. 25-13	Resolution No. 25-13 .pdf
2.	WAP 2025 Application Part 2 for Phase 2	WAP 2025 Application Part 2 for Phase 2 .pdf
3.	WAP 2025 Application Part 1 - Grant	WAP 2025 Application Part 1 - Grant

	Instructions	Instructions.pdf
4.	Riverwalk Day Dock Location Map	Riverwalk Day Dock Location Map.pdf
5.	Riverwalk Day Dock Site Development Plan	Riverwalk Day Dock Site Development Plan.pdf
6.	Cost Estimate	Cost Estimate.pdf
7.	Attorney Title Opinion	Attorney Title Opinion.pdf

Margaret Tomlinson	Created/Initiated - 2/10/2025
Tim Burman	Approved - 2/13/2025
Linda Truitt	Approved - 2/16/2025
Shannon Balmer	Approved - 3/4/2025
Wayne Clark	Final Approval - 3/7/2025

RESOLUTION NO. 25-13

ATTACHMENT E-5
RESOLUTION FOR ASSISTANCE 2025
UNDER THE FLORIDA INLAND NAVIGATION
DISTRICT WATERWAYS ASSISTANCE PROGRAM

WHEREAS, THE CITY OF PORT ORANGE is interested in carrying out the following described project for the enjoyment of the citizenry of City of Port Orange, Volusia County and the State of Florida:

Project Title: Riverwalk Day Dock Project Phase II
Total Estimated Cost: $1,620,520

Brief Description of Project: As part of the comprehensive Riverfront Park development, enhancement and public access, the City of Port Orange is seeking to build a Day (transient) Docking facility. The intent of this Day Dock facility is to provide recreational boaters access to the City's landward park amenities. The current intent is to develop a phased approach that will ultimately allow the City to accommodate up to 35-foot boat vessels. This application for Phase II will accommodate mooring of up to ten (10) vessels with a potential to add more slips as demand increases;

AND, Florida Inland Navigation District financial assistance is required for the program mentioned above;

NOW THEREFORE, be it resolved by the CITY OF PORT ORANGE that the project described above be authorized;

AND, be it further resolved that said City of Port Orange make application to the Florida Inland Navigation District in the amount of 50% of the actual cost of the project on behalf of said CITY OF PORT ORANGE;

AND, be it further resolved by the City of Port Orange that it certifies to the following:

1. That it will accept the terms and conditions set forth in FIND Rule 66B-2 F.A.C. and which will be a part of the Project Agreement for any assistance awarded under the attached proposal.

2. That it is in complete accord with the attached proposal and that it will carry out the Program in the manner described in the proposal and any plans and specifications attached thereto unless prior approval for any change has been received from the District.

3. That it has the ability and intention to finance its share of the cost of the project and that the project will be operated and maintained at the expense of said City of Port Orange for public use.

4. That it will not discriminate against any person on the basis of race, color or national origin in the use of any property or facility acquired or developed pursuant to this proposal, and shall comply with the terms and intent of the Title VI of the Civil Rights Act of 1964, P. L. 88-352 (1964) and design and construct all facilities to comply fully with statutes relating to accessibility by persons with disabilities as well as other federal, state and local laws, rules and requirements.

5. That it will maintain adequate financial records on the proposed project to substantiate claims for reimbursement.

6. That it will make available to FIND if requested, a post-audit of expenses incurred on the project prior to, or in conjunction with, request for the final 10% of the funding agreed to by FIND.

This is to certify that the foregoing is a true and correct copy of a resolution duly and legally adopted by the City of Port Orange City Council at a legal meeting held on this _____day of_____20___.

_____
MAYOR SCOTT STILTNER

ATTEST:

_____
Robin L. Fenwick, MMC, City Clerk

Reviewed and Approved: _____
Shannon K. Balmer, Senior Assistant City Attorney

Form No. 25-30, Rule 66B-2 (Executed Date: xx-xx-xx)

WATERWAYS ASSISTANCE PROGRAM

APPLICATION PACKAGE

Part 2. Attachment E

Florida Inland Navigation District

FY 2025-2026

WATERWAYS ASSISTANCE PROGRAM

APPLICATION PACKAGE

Part 2. Attachment E

SUBMIT THE APPLICATION INFORMATION IN THE ORDER LISTED ON THE CHECKLIST.
(See Attachment E-1)

Applications must be received by the District by 4:30 p.m. on March 28, 2025.

Application Submission:

Electronic copies: two separate PDF files per instructions):

PDF #1: Items 1-8 and PDF #2: Items 9-11

Electronic submission via email to:

CKelley@aicw.org

(pdf file size 15MB or less)

Application must be received by the deadline, no exceptions.

Attachment E - Applicant Tips Sheet

(Mistakes Common to the application process and how to avoid them)

SCHEDULING

The new application is available by January each year, and District funding is available AFTER October 1st of each year. Applicants should plan their schedule to avoid commonly missed deadlines: Application due – 28th of March; Property control/Technical sufficiency items – 14th of May, Permits – 16th of September. (Staff suggestion: Begin to secure property control and permits PRIOR to applying for funding.)

PROPERTY CONTROL VERIFICATION

Please have your attorney complete and sign the form in the application verifying applicant property control. In the case of leases or management agreements, please forward a copy to the District well in advance of the deadline to verify consistency with our program rules. (Staff suggestion: Resolve this requirement outside the application "window".)

PROJECT COSTS ELIGIBILITY

Please note the eligible project costs in Rule Section 66B-2.008, F.A.C. If you are not sure about an item's eligibility, ask! Note: Any ineligible cost, including in-house project management and administration, is also not eligible for an applicant's match. Make sure you have delineated your required minimum cost-share on the project cost estimate. (Staff suggestion: If you have questions about the eligibility of an item, work up a mock cost-sheet and send it to our office well before the deadline.)

COST-SHARE

Although the applicant must provide a minimum of 50% of the total project costs (25% for eligible public navigation dredging), there is no specific requirement to split each item. (Staff suggestion: You may want to organize project elements in a certain manner for easier accounting.)

PRE-AGREEMENT EXPENSES

Rule 66B-2.005(3), F.A.C. requires any activity in the submitted project cost estimate occurring PRIOR to October 1st to be considered as pre-agreement expenses. The Board's past philosophy has been to fund only those projects that require District funding assistance to be completed. It is best to avoid pre-agreement expenses if possible. Note: Pre-agreement expenses must be limited to 50% or less of the total project costs, and they are eligible for only ½ of the original District funding. (Example: A project with a total cost of $200,000 is Board-approved for one-half construction PRIOR to October 1st. In this case, District funding will be limited as follows: Only 50% of the $100,000 project cost prior to October 1st is eligible as project expenses (i.e. $50,000). Then only ½ of the eligible project expenses ($50,000) are eligible for District funding assistance (i.e. $25,000).

SUBMITTED MATERIALS & JUNE PRESENTATION

The Board must review and evaluate every application and each year we receive about 90 applications for consideration. The final product for the Board's review is two 8-1/2" x 11" spiral-bound notebooks containing the essential information for the application. NOTE: Make sure your final submitted material is the same material you will be presenting to the Board at our June meeting. This will avoid confusion and strengthen your presentation. (Staff suggestion: Limit the submitted materials to the requested information, in the required format and make sure it is consistent with your June presentation. Do not submit additional material at the June presentation!)

ELECTRONIC SUBMISSIONS

Grant applications are ONLY being accepted by email. Grant applications shall be submitted via email as two (2) pdf attachments (15mb max size and see attachment instructions on the next page). Make sure to label your pdf attachments with the applicant and project title. You will receive a confirmation email letting you know that your application has been received. Email your completed application to CKelley@aicw.org

Applications must be received by the District by 4:30 p.m. on March 28, 2025.

ATTACHMENT E-1
Waterways Assistance Program FY2025
Applicant Checklist

Project Title:	**Riverwalk Day Dock Phase II**
Applicant:	**City of Port Orange**

This checklist and the other items listed below in items 1 through 11 constitute your application. The required information shall be submitted in the order listed.

Electronic copies (2 separate PDF files per instructions – PDF File 1: Items 1-8, PDF File 2: Items 9-11) shall be emailed (15mb maximum file size) to CKelley@aicw.org. Applications must be received by the deadline, no exceptions.

		YES	NO
1.	District Commissioner Review (prior to March 4th) (***NOTE*: <u>For District Commissioner initials ONLY!)</u> (District Commissioner must initial the yes line on this checklist for the application to be deemed complete)**	____	____
2.	Application Checklist Attachment E-1 (Form No. 25-10, 2 pages) **(Form must be signed and dated)**	◉	○
3.	Application and Evaluation Worksheet Attachment E-2 (Form No. 25-15) **(First Page of Form Must be Signed)**	◉	○
4.	Project Cost Estimate Attachment E-3 (Form No. 25-20, 1 page) (**Must be on District form)**	◉	○
5.	Project Timeline Attachment E-4 (Form No. 25-25, 1 page)	◉	○
6.	County/City Location Map	◉	○
7.	Project Boundary Map	◉	○
8.	Clear and Detailed Site Development Plan Map	◉	○

Continued on Next Page

	YES	NO
9. Official Resolution Form Attachment E-5 (Form No. 25-30, 2 pages)(Resolution must be on District Form and includes items 1-6)	◉	○
10. Attorney's Certification (Land Ownership) Attachment E-6 (Form No. 25-35, 1 page)	◉	○
11. Copies of all Required Permits: ACOE, DEP, WMD (Requirement of Construction & Dredging Projects)	○	◉

The undersigned, as applicant, acknowledges that Items 1 through 11 above constitutes a complete application and that this information is due in the District office no later than 4:30 PM, March 28, 2025. By May 14, 2025, my application must be deemed complete (except for permits) or it will be removed from any further consideration by the District. I also acknowledge that the information in Item 11 is due to the District no later than September 16, 2025. If the information in Item 11 is not submitted to the District office by September 16, 2025, I am aware that my application will be removed from any further funding consideration by the District.

Theresa Brooks — Grant Manager

Print Liaison Name — Title

Liaison Signature — Date

FIND OFFICE USE ONLY

Date Received: _____

Local FIND Commissioner Review _____

All Required Supporting Documents: _____

Applicant Eligibility: _____

Project Eligibility _____ Available Score: _____

Compliance with Rule 66B-2 F.A.C.: _____

_____

Eligibility of Project Cost: _____

ATTACHMENT E-2

Waterways Assistance Program FY2025

Application and Evaluation Worksheet

Local Sponsor: **City of Port Orange**	Department: **Community Development**
Project Title: **Riverwalk Day Dock Project Phase II**	Use "Phase I" for Design Projects. Use "Phase II" for Construction if you received FIND funding for Phase I Work.
Project Director: **Tim Burman**	Email: **tburman@port-orange.org**
Grant Liaison: **Theresa Brooks** (If Different from Director)	Email: **tbrooks@port-orange.org**
Mailing Address: **1000 City Center Circle**	
City: **Port Orange**	Zip Code: **32129**
Phone Number: **386-717-9050**	
Project Address: **3431 and 3441 S. Ridgeway Avenue. Port Orange, FL 32129**	
Requested FIND Funding:	**$810,260**
Eligible Matching Funds Amount:	**$810,260**
Match Percentage:	**50%**
Total Project Costs:	**$1,620,520**
Applicant's Funding Source:	**General Fund**

_____ _____

Applicant Signature Certifying the Above Information Print Name

Project Summary: Maximum 200 Words

As part of the comprehensive Riverfront Park development. enhancement and public access, the City of Port Orange is seeking to build a *Day* (transient) Docking facility. The intent of this Day Dock facility is to provide recreational boaters access to the City's landward park amenities. The upland park was previously funded by FIND through multiple grants. Phase I of this project for design and engineering was also funded by FIND. Phase I has been completed. This application is for Phase II, construction of the facility. The Day Dock will be used as daytime only mooring for Volusia County residents and those who utilize the intracoastal Waterway (lCW), which abuts the Day Dock facility location. Navigational access from the ICW navigation channel to the proposed Day Dock facility will be included.

The current intent is to develop a phased approach that will ultimately allow the City to accommodate up to 35-foot boat vessels. This application for Phase II will accommodate mooring of up to ten (10) vessels with a potential to add more slips as demand increases.

1. Priority Category:

a) Choose one priority category of this project from the application instructions based upon the predominant cost of the project elements.

Priority #7- Acquisition, dredging, shoreline stabilization and development of public boat docking and mooring facilities

b) Explain how the project fits this priority category.

This project is part of the comprehensive Riverfront Park development, enhancement and public access, the City of Port Orange is seeking to build a Day (transient) Docking facility. The intent of this Day Dock facility is to provide all recreational boaters along the ICW access to the City's landward park amenities.

c) Explain how the project relates to the District's Waterways and the mission of the Florida Inland Navigation District.

This project provides access to all boaters navigating the ICW access to waterfront park and amenities.

2. Ownership of Project Site:

Own [X] Leased [ ] Other

If leased or other, please describe lease or terms and conditions:

3. Has the District previously provided assistance funding to this project or site?

   Yes [X] No [ ]

4. If yes, please list the project name, number and funding amount received:

VO-PO-13-98 Riverwalk Launch and Boardwalk Design, Phase I; VO-P0-14-105 Riverwalk Launch and Boardwalk Construction, Phase II; VO-PO-14-106 Riverwalk P3 Waterfront Park North B Phase I Design; VO-PO-15-107 Riverwalk Park North B Phase II Construction; and VO-PO-23-42 Day Dock at Riverwalk Park Phase I

5. What is the current level of public access in terms of the number of boat ramps, boat slips and trailer parking spaces, linear feet of boardwalk (etc.) if applicable?

Riverwalk Park provides one canoe launch with direct access to the Halifax River, 977 linear feet of shoreline stabilization, 125 linear *feet* of fishing pier and 270 linear feet of boardwalk.

6. How many additional ramps, slips, parking spaces or other access features will be added by this project, and what is the approximate number of registered vessels estimated to use the constructed project?

Mooring of up to ten (10) vessels with a potential to add more slips as demand increases

7. Public Usage & Benefits:

   a) What public access or navigational benefit to the District's waterways will result from this project? How will this project enhance public access to the District's waterways, and what specific navigational benefits will it provide to the community?

Currently there is no ability for boaters to dock to use the park facility and amenities at this location. This project will increase transient docking availability which allows all boaters along the ICW to safely dock and use the park especially larger transient boats. This phase will provide ten (10) docking spaces with room to add on as demand increases.

   b) What is the current demand for public access or navigation facilities in the area, and how does this project address unmet needs or improve upon existing facilities?

Current transient boaters within the ICW in Port Orange and nearby, do not have access to docking facilities where they can moor and spend the day exploring the amenities that Port Orange has to offer, both at the park and at their commercial district nearby. There are no docks or any docking facilities at this Park site for any recreational boaters to use and access the park facilities. As part of the comprehensive Riverfront Park development, enhancement and public access, the City of Port Orange is seeking to build a Day (transient) Docking facility that will meet the demand.

These transient boater's demand for docking facilities has increased over the years. This project is unique in the area and will help to fill the demand and need currently in place. The opportunity to expand in the future will meet those needs and expectations in the future as well.

This project will be accessible to all boaters using the ICW; both regional and local.

c) How does the project fit within regional or local maritime management plans, public access initiatives, or comprehensive plans, and how does it contribute to broader public usage goals?

This project is part of the comprehensive Riverfront Park development, enhancement and public access plan.

d) Has the local Sponsor implemented or plans to implement any boating access, speed zone, commercial access or other restrictive use in the area of this site?

This project will enable the City not only implement boating access to the park facility, but also to the amenities nearby.

8. Fees & Maintenance:

Are there any fees associated with the use of this facility? Yes ☐ No ☒

If answered Yes:

a) List or provide a fee schedule.

b) Provide a listing of the fees charged by similar facilities, public and private, in the project area.

c) Pursuant to Rule 66B-2.004(11), if there are any fees, please explain how these fees are tracked and what they are used for.

d) Clearly demonstrate how the project will continue to be maintained and funded after initial funding is completed.

The City will budget annually in the General Fund for the maintenance of the facility as it does with the park and other facilities.

9. Please list all Environmental Resource Permits required for this project:

Agency	Y/N	Date Applied	Date Received
Water Management District	Y	1/9/25	
Dept of Environmental Protection	N	1/31/25 – transferred to SJR Water Management District	
USACE	Y		

10. a) Construction

This question is to be answered **only** if this application is for a **Construction** project.

In the summary box at the bottom of this page, please address each of the bullet points listed below to maximize your score for this competitive grant application.

PERMITTING:

- Have all required environmental permits been applied for? (USACE, DEP and WMD) If permits are NOT required, explain why not.
- Detail any significant impediments that may have been identified that would potentially delay the timely issuance of the required permits.
- For Phase I design, permitting, and engineering projects, please provide a general cost estimate for the future Phase II construction work.

CONSTRUCTION TECHNIQUES:

- What is the design life of the project and proposed materials?
- What considerations, if any, have been made for storm surge and hurricane impacts in the design and life span of this project?

Construction Project: Maximum 200 Words (Address all bullet points above)

All required environmental permits have been applied for. We do not anticipate any significant impediments that would potentially delay timely issuance of required permits.

Cost estimate for the Phase II construction work is attached.

The City intends to use concrete piles and floating system and does not expect any impacts due to material use. All metal components will be stainless steel to protect against corrosion and increase longevity of the facility.

The design life is 30 plus years.

10. b) Environmental Education

This question is to be answered **only** if this application is for an Environmental Education project.

In the summary box at the bottom of this page, please address each of the bullet points listed below to maximize your score for this competitive grant application.

DILIGENCE:

- Who is the primary target audience or user group for the project and how were they identified?
- How have the needs of the target audience been evaluated and met?
- How many people will the program serve on an annual basis? What will be the measurable results?
- Describe the materials and project deliverables to be produced by this project.
- Describe the plan for dissemination of the materials produced through the project,

EXPERIENCE & QUALIFICATIONS:

- Please briefly describe the qualifications of the program administrator(s), including prior experience, and areas of expertise.
- What previous projects of this nature have been completed by the program manager?

PROJECT GOALS:

- What are the long-term goals of this project as it relates to the ICW?
- What is the expected duration/frequency of this program?

Environmental Education Project: Maximum 400 Words (Address all bullet points above)

N/A

10. c) Law Enforcement

This question is to be answered **only** if this application is for a Law Enforcement project.

In the summary box at the bottom of this page, please address each of the bullet points listed below to maximize your score for this competitive grant application.

WATERWAY RELATIONSHIP:

- Describe how the project will enhance boating access, safety, or enforcement efforts on the waterway, and address the identified needs or benefits for public safety.

EXPERIENCE & QUALIFICATIONS:

- List the personnel tasked with the implementation of this project, their qualifications, previous training and experience.

DELIVERABLES:

- Describe the project deliverables and why this particular law enforcement vessel, equipment or facility improvements was selected or are necessary.

AREA OF COVERAGE

- What is the range or area of coverage for this project?

Law Enforcement Project: Maximum 200 Words (Address all bullet points above)

N/A

10. d) Inlet or Public Navigation

This question is to be answered **only** if this application is for an Inlet or Public Navigation dredging project.

In the summary box at the bottom of this page, please address each of the bullet points listed below to maximize your score for this competitive grant application.

WATERWAY RELATIONSHIP:

- Will the project inhibit sediment inflow into, or reduce the dredging frequency of the Intracoastal Waterway channel?
- How does the project directly benefit the Intracoastal Waterway channel?
- Identify any long-term sedimentation problems and briefly discuss any methods or activities that will address these issues.

PUBLIC ACCESS

- Describe in brief detail how the project will enhance public access to or from the Intracoastal Waterway? List the upstream publicly accessible facilities with improved access because of this project.

BENEFICIAL PROJECT ELEMENTS:

- Describe any economic benefits to be realized by implementing this project.

PROJECT MAINTENANCE:

- When was this area last dredged? What is the expected frequency of future dredging? Where will the dredged material be relocated to?

Inlet or Public Navigation Project: Maximum 200 Words (Address all bullet points above)

N/A

10. e) Beach Renourishment

This question is to be answered **only** if this application is for a Beach Renourishment project.

In the summary box at the bottom of this page, please address each of the bullet points listed below to maximize your score for this competitive grant application.

WATERWAY RELATIONSHIP:

- Describe how the District and other navigation interests will benefit from the implementation of this project.

VIABILITY:

- Is the project site defined as critically eroded area by a statewide beach management plan?
- Cite the quantifiable rate of erosion in this area.
- Is the project an important component of an overall beach management effort?

PUBLIC BENEFITS:

- Are there quantifiable public benefits demonstrated by the project?
- Is there adequate public access to the project area? Please describe location and amount.

PROJECT FUNDING:

- Describe any assistance funding from other sources.
- Clarify the availability of long-term funding for this project.

Beach Renourishment Project: Maximum 200 Words (Address all bullet points above)

N/A

11. Disaster Relief

This question is to be answered **only** if this application is for repairs/construction of waterways facilities damaged by a declared natural disaster.

In the summary box at the bottom of this page, please address each of the bullet points listed below to maximize your score for this competitive grant application.

STORM DAMAGE EVALUATION:

- List the State of Emergency declaration order or proclamation & the name and date of the storm/event. [Pursuant to State of emergency declared under Chapter 252, F.S.]
- Describe the extent of the damage that was caused due to the storm/event and any Construction/Resiliency Improvements planned for the project.
- What is the current status of your FEMA paperwork for the project?

PROJECT FUNDING:

- Describe the other funding mechanisms and financial assistance that will be applied to defray the reconstruction costs or damage repair

Disaster Relief Project: Maximum 200 Words (Address all bullet points above)

N/A

ATTACHMENT E-3

Waterways Assistance Program FY2025

PROJECT COST ESTIMATE

(See Rule Section 66B-2.005 & 2.008 for eligibility and funding ratios)

Project Title:	**Riverwalk Day Dock Project Phase II**
Applicant:	**City of Port Orange**

Project Elements *(Please list the MAJOR project elements and provide general costs for each one. For Phase I Projects, please list the major elements and products expected)*	**Total Estimated Cost**	**Applicant's Cost** (To the nearest $50)	**FIND Cost** (To the nearest $50)
Construction	$1,620,520	$810,260	$810,260

****TOTALS =**	$1,620,520	$810,260	$810,260

ATTACHMENT E-4

Waterways Assistance Program FY2025

PROJECT TIMELINE

Project Title:	**Riverwalk Day Dock Project Phase II**
Applicant:	**City of Port Orange**

The applicant is to present a detailed timeline on the accomplishment of the components of the proposed project including, as applicable, completion dates for: permitting, design, bidding, applicant approvals, initiation of construction and completion of construction. NOTE: All funded activities must begin AFTER October 1st or be consistent with Rule 66B-2.005(3) - Pre-agreement expenses.

Design complete	**6/1/2025**
Permitting complete	**7/1/2025**
Bid Advertisement	**11/7/2025**
Bid Opening	**12/16/2025**
Contract Award	**1/20/2026**
Notice to Proceed to Contractor	**1/27/2026**
Final Completion/Acceptance	**7/27/2026**

RESOLUTION NO. 25-13

ATTACHMENT E-5
RESOLUTION FOR ASSISTANCE 2025
UNDER THE FLORIDA INLAND NAVIGATION
DISTRICT WATERWAYS ASSISTANCE PROGRAM

WHEREAS, THE CITY OF PORT ORANGE is interested in carrying out the following described project for the enjoyment of the citizenry of City of Port Orange, Volusia County and the State of Florida:

Project Title: Riverwalk Day Dock Project Phase II
Total Estimated Cost: $1,620,520

Brief Description of Project: As part of the comprehensive Riverfront Park development, enhancement and public access, the City of Port Orange is seeking to build a Day (transient) Docking facility. The intent of this Day Dock facility is to provide recreational boaters access to the City's landward park amenities. The current intent is to develop a phased approach that will ultimately allow the City to accommodate up to 35-foot boat vessels. This application for Phase II will accommodate mooring of up to ten (10) vessels with a potential to add more slips as demand increases;

AND, Florida Inland Navigation District financial assistance is required for the program mentioned above;

NOW THEREFORE, be it resolved by the CITY OF PORT ORANGE that the project described above be authorized;

AND, be it further resolved that said City of Port Orange make application to the Florida Inland Navigation District in the amount of 50% of the actual cost of the project on behalf of said CITY OF PORT ORANGE;

AND, be it further resolved by the City of Port Orange that it certifies to the following:

1. That it will accept the terms and conditions set forth in FIND Rule 66B-2 F.A.C. and which will be a part of the Project Agreement for any assistance awarded under the attached proposal.

2. That it is in complete accord with the attached proposal and that it will carry out the Program in the manner described in the proposal and any plans and specifications attached thereto unless prior approval for any change has been received from the District.

3. That it has the ability and intention to finance its share of the cost of the project and that the project will be operated and maintained at the expense of said City of Port Orange for public use.

4. That it will not discriminate against any person on the basis of race, color or national origin in the use of any property or facility acquired or developed pursuant to this proposal, and shall comply with the terms and intent of the Title VI of the Civil Rights Act of 1964, P. L. 88-352 (1964) and design and construct all facilities to comply fully with statutes relating to accessibility by persons with disabilities as well as other federal, state and local laws, rules and requirements.

5. That it will maintain adequate financial records on the proposed project to substantiate claims for reimbursement.

6. That it will make available to FIND if requested, a post-audit of expenses incurred on the project prior to, or in conjunction with, request for the final 10% of the funding agreed to by FIND.

This is to certify that the foregoing is a true and correct copy of a resolution duly and legally adopted by the City of Port Orange City Council at a legal meeting held on this _____day of_____20___.

_____
MAYOR SCOTT STILTNER

ATTEST:

_____
Robin L. Fenwick, MMC, City Clerk

Reviewed and Approved: _____
Shannon K. Balmer, Senior Assistant City Attorney

Form No. 25-30, Rule 66B-2 (Executed Date: xx-xx-xx)

ATTACHMENT E-6

ATTORNEYS CERTIFICATION OF TITLE 2025

(See Rule 66B-2.006(4) & 2.008(2) FAC)

OFFICE OF THE CITY ATTORNEY
CITY OF PORT ORANGE
1000 City Center Circle
Port Orange, Florida 32129

March 3, 2025

To WHOM IT MAY CONCERN:

I, Shannon K. Balmer, am the Senior Assistant City Attorney for the *City of Port Orange,* Florida. I hereby state that I have examined a copy of a deed for Parcel No. 6303-10-01-0020 from William Mack Ballard and Amelia J. Ballard, husband and wife, dated May 29, 1998, and recorded in Official Records Book 4311, page 1903, Public Records of Volusia County, Florida to the *City of Port Orange, a Florida municipal corporation*, conveying Fee simple interest in the following property:

See Exhibit "A", attached hereto and made a part hereof by reference.

I have also examined a document showing that this property is listed on the tax rolls as belonging to the ***City of Port Orange, a Florida municipal corporation.*** Finally, I have also examined such documents and records as necessary for this certification.

This property is what is now called "Riverwalk Day Dock Project Phase II".

I Certify that the ***City of Port Orange, a Florida municipal corporation*** does in fact own this property for approximately 27years.

Very truly yours,

Shannon K. Balmer
Senior Assistant City Attorney for City of Port Orange

ATTACHMENT E-6

ATTORNEYS CERTIFICATION OF TITLE 2025

(See Rule 66B-2.006(4) & 2.008(2) FAC)

OFFICE OF THE CITY ATTORNEY
CITY OF PORT ORANGE
1000 City Center Circle
Port Orange, Florida 32129

March 3, 2025

To WHOM IT MAY CONCERN:

I, Shannon K. Balmer, am the Senior Assistant City Attorney for the *City of Port Orange,* Florida. I hereby state that I have examined copies of the following deeds that comprise Parcel No. 6303-10-01-0011:

Deed from Community Redevelopment Agency for Port Orange Town Center, a public body corporate and politic established pursuant to Section 163.356, Florida Statutes, dated December 27, 2021, and recorded in Official Records Book 8178, page 1893, Public Records of Volusia County, Florida to the *City of Port Orange, a Florida municipal corporation*, conveying Fee simple interest in the following property:

See Exhibit "A", Parcels 1 and 2, attached hereto and made a part hereof by reference.

Deed from John J. Gysbers and Marie P. Gysbers, dated October 24, 1990, 1993, and recorded in Official Records Book 3544, page 1588, Public Records of Volusia County, Florida to the *City of Port Orange, a Florida municipal corporation*, conveying Fee simple interest in the following property:

See Exhibit "A", Parcel 3, attached hereto and made a part hereof by reference

Deed from Andrew Russell Smith and William Dougherty Smith, dated August 4, 1992, and recorded in Official Records Book 3763, page 0499, Public Records of Volusia County, Florida to the *City of Port Orange, a Florida municipal corporation*, conveying Fee simple interest in the following property:

See Exhibit "A", Parcel 4, attached hereto and made a part hereof by reference.

Deed from Guy Thomas Peshek and Evelyn Lucy Peshek, dated November 3, 1965, and recorded in Official Records Book 748, page 264, Public Records of Volusia County, Florida to the *City of Port Orange, a Florida municipal corporation*, conveying Fee simple interest in the following property:

See Exhibit "A", Parcel 5, attached hereto and made a part hereof by reference.

Deed from Esther Gergely, dated September 30, 1993, and recorded in Official Records Book 3862, page 1947, Public Records of Volusia County, Florida to the *City of Port Orange, a Florida municipal corporation*, conveying Fee simple interest in the following property:

See Exhibit "A", Parcel 6, attached hereto and made a part hereof by reference.

Deed from Esther Gergely, dated September 30, 1993, and recorded in Official Records Book 3862, page 1948, Public Records of Volusia County, Florida to the *City of Port Orange, a Florida municipal corporation*, conveying Fee simple interest in the following property:

See Exhibit "A", Parcel 7, attached hereto and made a part hereof by reference.

I have also examined a document showing that this property is listed on the tax rolls as belonging to the ***City of Port Orange, a Florida municipal corporation.*** Finally, I have also examined such documents and records as necessary for this certification.

This property is what is now called "Riverwalk Day Dock Project Phase II".

I Certify that the ***City of Port Orange, a Florida municipal corporation*** does in fact own this property for approximately 32years as to Parcels 6 and 7, 60 years as to Parcel 5, 31 years as to Parcel 4, 35 years as to Parcel 3, and 4 years as to Parcels 1 and 2.

Very truly yours,

Shannon K. Balmer
Senior Assistant City Attorney for City of Port Orange

Form No. 25-35, Rule 66B-2 (Effective Date: xx-xx-xx)

FLORIDA INLAND NAVIGATION DISTRICT

COMMISSIONERS

T. SPENCER CROWLEY, III
CHAIR
MIAMI-DADE COUNTY

J. CARL BLOW
VICE CHAIR
ST. JOHNS COUNTY

STEPHEN W. BOEHNING
TREASURER
INDIAN RIVER COUNTY

BUDDY DAVENPORT
SECRETARY
VOLUSIA COUNTY

AUSTIN BURKETT
PALM BEACH COUNTY

PATRICK CALLAWAY, P.E.
DUVAL COUNTY

CATHY CHAPMAN
NASSAU COUNTY

MICHAEL KENNEDY
MARTIN COUNTY

PAUL TRABULSY
ST. LUCIE COUNTY

RANDY STAPLEFORD
FLAGLER COUNTY

RICHARD WALTZER
BROWARD COUNTY

VACANT
BREVARD COUNTY

JANET ZIMMERMAN
EXECUTIVE DIRECTOR

CHRIS KELLEY
DEPUTY DIRECTOR

From: Chris Kelley, Deputy Director
Subject: 2025 Waterways Assistance Program
Date: December 19, 2024

Attached is an application package for the District's 2025 Waterways Assistance Program (WAP). The WAP application can also be downloaded from our website: www.AICW.org Through FIND's Assistance Programs over the past 39 years, the District has provided a total of over $162 million in funding assistance to local governments within our District to perform waterways improvement projects.

Project types eligible for funding include public navigation, public waterway access facilities, waterfront parks, environmental education and boating safety projects directly related to the waterways. The District also provides grants for land acquisition which include opportunities for waterway access. Generally, ineligible costs include project maintenance, landscaping, in-house staff and reoccurring fees. Please see the program rules for more details on project eligibility. The funding level of this year's program will be determined in July based upon the availability of funding to the District and the quality and number of applications received.

Applications are due in the District office by 4:30 PM, March 28, 2025. Your application must be discussed and initialed by your local FIND Commissioner prior to March 4, 2025, and submitted to the District office by March 28, 2025. Please see the application package for the complete program schedule and the name and address of your FIND Commissioner.

Application Submission: An electronic copy (2 PDF files per the instructions) should be emailed to CKelley@aicw.org. Please make sure that the file size of the email is 15MB or less, or your email may be rejected due to mail server size limitations. Applications must be received by the deadline, no exceptions. Only the requested information should be submitted. It is VERY important that the application forms remain in the same 8.5 x 11", paginated format, and the forms must be presented in the order listed on the application checklist. Applications that do not follow the program directions, rules, or the application format may be rejected.

Please review the application checklist and be sure you can provide all the required items. If you cannot provide ALL the items on the application checklist, please contact staff immediately for advice on the potential resolution of a required item. Any application failing to include the required application items (with the exception of environmental resource permits & exemptions) will be eliminated from consideration on May 14, 2025. There is no waiver or exception available for this deadline.

FY 2025-2026

WATERWAYS ASSISTANCE PROGRAM

APPLICATION PACKAGE

Part 1: Attachments A through D

TABLE OF CONTENTS

FY 2025-2026

WATERWAYS ASSISTANCE PROGRAM APPLICATION

Part 1.

ATTACHMENT A PROGRAM SCHEDULE

ATTACHMENT B COMMISSIONERS LISTING

ATTACHMENT C PROJECT PRIORITY LIST

ATTACHMENT D PROGRAM RULES

Part 2.

ATTACHMENT E PROGRAM APPLICATION/TIPS SHEET (1 PAGE)

E-1. APPLICATION CHECK LIST (2 PAGES)

E-2. APPLICANT INFORMATION/ SUMMARY plus questions 1-9,

Note: Questions 10. (a-e) and Question 11. should only be filled out if they are applicable to your project category.

E-3. COST ESTIMATE FORM

E-4. PROJECT TIMELINE

E-5. RESOLUTION (2 PAGES)

E-6. ATTORNEYS CERTIFICATION OF TITLE

ATTACHMENTS: CITY/COUNTY MAPS AND SITE PLAN

ATTACHMENT A

FY 2025-2026
WATERWAYS ASSISTANCE PROGRAM
SCHEDULE

January 2025	Availability of application packages.
Prior to March 4, 2025	Applicants schedule review of proposed projects with local FIND Commissioner our ommissioner s initials are required on your application by arch , 2 2
March 28, 2025	**Application due in the District office by 4:30 PM (No Exceptions)**
May 14, 2025	Application requirements must be completed or application will be eliminated from further consideration.
June 20 & 21, 2025	Applicants make a 10-minute presentation of application to FIND Board. Meeting held in Brevard County.
July 18, 2025	FIND Board reviews additional requested information and the Commissioners will complete the Application's Rating & Evaluation Form. Board makes final funding decisions on remaining eligible applications (subject to budget process).
Sept. 16, 2025	All remaining permits due.
October 1, 2025	Grant awards are announced. Funded applicants execute project agreement. Project funds become available, project initiates, timeline begins.

ATTACHMENT B
2025 BOARD OF COMMISSIONERS

Duval County Mr. Patrick Callaway, P.E. 8463 STABLES RD JACKSONVILLE, FL 32256 (904) 545-6359 pcallaway@aicw.org	**St. Lucie County** Mr. Paul Trabulsy 5428 STATELY OAK ST FORT PIERCE, FL 34981 (772) 216-2631 ptrabulsy@aicw.org
St. Johns County Mr. J. Carl Blow 100 SANTA MONICA AVE ST AUGUSTINE FL 32080 (904) 710-2655 jcblow@aicw.org	**Martin County** Mr. Michael Kennedy 2600 SOUTH KANNER HWY STUART, FL 34994 (561) 685-0315 mkennedy@aicw.org
Flagler County Mr. Randy Stapleford 77 COMANCHE CT PALM COAST, FL 32137 (724) 766-0690 rstapleford@aicw.org	**Palm Beach County** Mr. Austin Burkett 18454 CLAYBROOK ST JUPITER, FL 33458 (561) 901-3438 aburkett@aicw.org
Volusia County Mr. Buddy Davenport 106 GRANDVIEW DR NEW SMYRNA BEACH FL 32168 (386) 405-0681 bdavenport@aicw.org	**Broward County** Mr. Richard Waltzer 2880 NE 26tTH PLACE FORT LAUDERDALE, FL 33306 (954) 931-9787 rwaltzer@aicw.org
Miami-Dade County Mr. T Spencer Crowley, C/O Akerman LLP THREE BRICKELL CITY CENTRE 98 SE 7TH ST STE 1100 MIAMI, FL 33131 (305) 374-5600 tscrowley@aicw.org	**Indian River County** Mr. Patrick Callaway, P.E. 1443 20TH ST STE F VERO BEACH, FL (772) 473-4099 sboehning@aicw.org
Nassau County Mrs. Cathy Chapman 95605 RAINBOW ACRES RD FERNANDINA BEACH, FL 32034 (904) 753-1970 cchapman@aicw.org	**Brevard County** VACANT Contact Janet Zimmerman (561) 627-3386 ext. 5 jzimmerman@aicw.org

ATTACHMENT C

2025 ASSISTANCE PROGRAM PROJECT PRIORITY LIST

PRIORITY PROJECT CATEGORY	MAX POINTS AVAILABLE (Question #1)	*Highest Potential Score*
1. Public navigation channel dredging	8	*50*
2. Public navigation aids & markers	8	*50*
3. New Inlet management projects that are a benefit to public navigation in the District	7	*49*
4. Public shoreline stabilization directly benefiting the District's waterway channels (ICW or OWW)	7	*49*
5. Acquisition and development of publicly owned spoil disposal sites & public commercial/industrial waterway access	6	*48*
6. Acquisition, dredging, shoreline stabilization and development of public boat ramps and launching facilities	5	*47*
7. Acquisition, dredging, shoreline stabilization and development of public boat docking and mooring facilities	5	*47*
8. Derelict vessel removal	4	*46*
9. Waterway signs & buoys for safety, regulation or information	4	*46*
10. Public fishing & viewing piers	3	*45*
11. Public waterfront parks and boardwalks & associated improvements	3	*45*
12. Maritime Management Planning	3	*45*
13. Waterway boating safety programs & equipment	3	*45*
14. Waterway related environmental education programs & facilities	*2*	*44*
15. Beach renourishment on beaches adversely impacted by navigation inlets, navigation structures, navigation dredging, or a navigation project	2	*44*
16. Environmental restoration, enhancement or mitigation projects with public access component	*2*	*44*
17. Other waterway related projects	1	*43*

NOTE: *Projects qualifying for Emergency Re-Construction status may have an additional 3 points available to the potential score.*

CHAPTER 66B-2
WATERWAYS ASSISTANCE PROGRAM (Draft 2025)

66B-2.001 Purpose
66B-2.002 Forms
66B-2.003 Definitions
66B-2.004 Policy
66B-2.005 Funds Allocation
66B-2.006 Application Process
66B-2.0061 Emergency Applications
66B-2.007 Application Form (Repealed)
66B-2.008 Project Eligibility
66B-2.009 Project Administration
66B-2.010 Project Agreement (Repealed)
66B-2.011 Reimbursement
66B-2.012 Accountability
66B-2.013 Acknowledgement
66B-2.014 Small-Scale Spoil Island Restoration and Enhancement Projects
66B-2.015 Small-Scale Derelict Vessel Removal Projects
66B-2.016 Waterways Cleanup Events

66B-2.001 Purpose.
Recognizing the importance and benefits of inland navigation channels and waterways, as well as noting problems associated with the construction, continued maintenance and use of these waterways, the Florida Legislature created Section 374.976, F.S. This law authorizes and empowers each inland navigation district to undertake programs intended to alleviate the problems associated with its waterways. The purpose of this rule is to set forth the District's policy and procedures for the implementation of an assistance program under Section 374.976, F.S., for local governments, member counties and navigation related districts within the District. This program will be known hereafter as the Florida Inland Navigation District's Waterways Assistance Program.

Rulemaking Authority 374.976(2) FS. Law Implemented 374.976(1) FS. History–New 12-17-90, Formerly 16T-2.001.

66B-2.002 Forms.
All forms for the administration of this program are available from the District office located at 1314 Marcinski Road, Jupiter, Florida 33477.

Rulemaking Authority 374.976(2) FS. Law Implemented 374.976(1) FS. History–New 12-17-90, Formerly 16T-2.002.

66B-2.003 Definitions.
The basic terms utilized in this rule are defined as follows:

(1) "APPLICANT" means an eligible governmental agency submitting an application through this program.

(2) "APPLICATION" means a project proposal with the required documentation.

(3) "AUTHORIZED SUBMISSION PERIOD" means the established period for submitting applications to the District.

(4) "BEACH RENOURISHMENT" means the placement of sand on a beach for the nourishment, renourishment or restoration of a beach.

(5) "BOARD" means the Board of Commissioners of the Florida Inland Navigation District.

(6) "DISTRICT" means the Florida Inland Navigation District (FIND).

(7) "ELIGIBLE GOVERNMENTAL AGENCY" means member counties, local governments and navigation related districts within the taxing boundaries of the District.

(8) "ENVIRONMENTAL PERMITS" means those permits, proprietary authorizations, exemptions, or general permits for construction below mean high water line of a navigable waterway required and issued by or on behalf of the U.S. Army Corps of Engineers, the Florida Department of Environmental Protection, and the South Florida or the St. Johns River Water Management

Districts or their successors.

(9) “EXECUTIVE DIRECTOR” means the Executive Director of the Florida Inland Navigation District.

(10) “LIAISON AGENT” means the contact person officially designated to act on behalf of the applicant or the project sponsor.

(11) “LOCAL GOVERNMENTS” means municipalities, cities, or consolidated county governments, which are located within the member counties.

(12) “MARITIME MANAGEMENT PLAN” means a written plan containing a systematic arrangement of elements specifically formulated to identify, evaluate and promote the benefits of eligible waterway accessibility and enjoyment, with consideration and respect to the physical, environmental and economic parameters of the planning area.

(13) “MATCHING FUNDS” means those funds provided by the local sponsor to the project.

(14) “MEMBER COUNTY” means a county located within the taxing boundaries of the District which includes Nassau, Duval, St. Johns, Flagler, Volusia, Brevard, Indian River, St. Lucie, Martin, Palm Beach, Broward and Miami-Dade Counties.

(15) “NAVIGATION RELATED DISTRICTS” means port authorities, inlet districts or any other agency having legally authorized navigation related duties in waterways of the District.

(16) “PRE-AGREEMENT COSTS” means project costs approved by the District Board which have occurred prior to the execution of the project agreement.

(17) “PROGRAM” means the Florida Inland Navigation District Waterways Assistance Program.

(18) “PROGRAM FUNDS” means financial assistance awarded by the Board to a project for release to the project sponsor pursuant to the terms of the project agreement.

(19) “PROJECT” means a planned undertaking consisting of eligible program facilities, improvements or expenses for the use and benefit of the general public.

(20) “PROJECT AGREEMENT” means an executed contract between the District and a project sponsor setting forth mutual obligations regarding an approved project.

(21) “PROJECT MAINTENANCE” means any usual action, activity, expense, replacement, adjustment or repair taken to retain a project or grant item in a serviceable, operational or normal condition, or the routine efforts and expenses necessary to restore it to serviceable or normal condition, including the routine recurring work required to keep the project or grant item in such condition that it may be continuously used at its original or designed capacity and efficiency for its intended purpose.

(22) “PROJECT MANAGER” means the District employee who is responsible for monitoring the performance of the Project and compliance with the project agreement.

(23) “PROJECT PERIOD” means the approved time during which costs may be incurred and charged to the funded project.

(24) “PROJECT SPONSOR” means an eligible governmental agency receiving program funds pursuant to an approved application.

(25) “PUBLIC BUILDING” means a building or facility on government owned property that is owned or operated by a governmental entity, or operated by a third party operator. The building or facility must provide waterway related information, public meeting space, or educational services and be open to members of the public on a continual basis without discrimination.

(26) “PUBLIC MARINA” means a harbor complex used primarily for recreational boat mooring or storage, the services of which are open to the general public on a first come, first served basis without any qualifying requirements such as club membership, stock ownership, or differential in price.

(27) “PUBLICLY OWNED COMMERCIAL OR INDUSTRIAL WATERWAY ACCESS” means any publicly owned area specifically designed to be used for staging, launching, or off-loading by commercial or industrial waterway users on a first come, first served, short-term basis, to gain entry to or from the District’s waterways to serve the infrastructure needs of the District’s waterway users.

(28) “WATERWAYS” means the Atlantic Intracoastal Waterway, the Okeechobee Waterway, the Barge Canal in Brevard County west of the Port Canaveral Locks, those portions of the Dania Cut-Off Canal and the Hillsboro Canal east of the water control structures, all navigable natural rivers, bays, creeks or lagoons intersected by said waterways and all navigable natural creeks, rivers, bays or lagoons entering or extending from said waterways.

(29) “WATERWAY RELATED ENVIRONMENTAL EDUCATION” means an interdisciplinary holistic process by which the learner: develops an awareness of the natural and manmade environments of waterways; develops knowledge about how the environment of the waterways works; acquires knowledge about the technological, social, cultural, political, and economic relationships occurring in waterway related environmental issues; and, becomes motivated to apply action strategies to maintain

balance between quality of life and quality of the environment of waterways.

Rulemaking Authority 374.976(2) FS. Law Implemented 374.976(1) FS. History–New 12-17-90, Amended 9-2-92, 2-6-97, Formerly 16T-2.003, Amended 5-17-98, 3-21-01, 3-20-03, 3-3-04, 4-21-05, 4-24-06, 4-15-07, 3-25-08, 3-7-11, 3-25-21.

66B-2.004 Policy.

The following constitutes the policy of the District regarding the administration of the program:

(1) Financial Assistance Eligibility: Financial assistance, support and cooperation may be provided to eligible governmental agencies for approved projects as follows:

(a) Member counties may be provided financial assistance, support or cooperation in planning, acquisition, development, construction, reconstruction, extension, improvement, operation or the maintenance of public navigation, local and regional anchorage management, beach renourishment, public recreation, inlet management, environmental education, maritime management plans, and boating safety projects directly related to the waterways.

(b) Eligible local governments may also be provided financial assistance, support and cooperation in planning and carrying out public navigation, local and regional anchorage management, beach renourishment, public recreation, inlet management, environmental education, and boating safety projects directly related to the waterways.

(c) Navigation related districts may be provided with financial assistance to pay part of the costs of the planning and acquisition of dredge material management sites if the Board finds that the site is required for the long-range maintenance of the Atlantic Intracoastal Waterway channel. All such sites must meet the development and operational criteria established by the District through a long-range dredge material management plan for that county. Navigation related districts may also be provided with assistance for waterway related access projects, environmental mitigation projects associated with waterway improvement related activities, and inlet management projects if the Board finds that the project benefits public navigation in the Atlantic Intracoastal Waterway. All navigation related districts shall contribute at least equal matching funds to any District financial assistance provided. Seaports may also be furnished assistance and support in planning and carrying out environmental mitigation projects. All seaport projects shall benefit publicly maintained channels and harbors. Each seaport shall contribute matching funds for funded projects.

(d) Eligible projects shall include the acquisition and development of public boat ramps and launching facilities, including those in man-made, navigable waterways contiguous to "waterways" as defined in Rule 66B-2.003, F.A.C.

(2) Notification: The District will notify by direct mail, email and/or advertised public notice all eligible governmental agencies of the program and the upcoming authorized submission period.

(3) Project Approval: Approval of projects by the District shall be in accordance with these rules.

(4) Project Accessibility: Facilities or programs funded in whole or in part by program funds shall be made available to the general public of all of the member counties on a non-exclusive basis without regard to race, color, religion, age, sex or similar condition. Additionally, facilities funded in whole or in part by program funds, shall not require a paid membership for the general public of all of the member counties as a condition to use the facilities. User or entrance fees may be charged for the use of facilities funded in whole or in part by program funds, however such fees shall be reasonable and shall be the same for the general public of all of the member counties.

(5) Waterway Impacts: All development projects must be designed so as not to impact navigation along the District's waterways through the placement of structures, attendant uses, or the necessity of a boating speed zone for safety purposes. Before applying for boating speed zone designation in District waterways because of a project funded by this program, the sponsor shall first receive approval from the Board. The Board will use the criteria found in Section 327.46(1), F.S., in determining whether to approve the proposed boating speed zone.

(6) Project Maintenance: The project sponsor shall be responsible for the operation, maintenance, and management of the project for the anticipated life of the project and shall be responsible for all expenses required for such purposes. The project shall be maintained in accordance with the standards of maintenance for other similar local facilities and in accordance with applicable health standards. Project facilities and improvements shall be kept reasonably safe and in reasonable repair to prevent undue deterioration and to encourage public use. The project sponsor shall have full legal authority and financial ability to operate and maintain the project facilities.

(7) Education Facilities and Programs: Waterways related environmental education facilities and programs sponsored by the District shall occur at specially designated environmental education facilities located adjacent and contiguous to the waterways. It is the District's intent to consolidate its environmental education efforts in the least number of facilities within an area that will

adequately serve the education needs of that area of the District.

(8) Public Information Availability: Public information produced with assistance from this program shall not be copyrighted and shall be provided free of cost, except for the cost of reproduction, to the public.

(9) Third-Party Project Operators: Projects that are being operated by a third party shall have sufficient oversight by the eligible project sponsor as determined by the Board. Such oversight, at a minimum, will include a project liaison that is a staff member of the eligible project sponsor, and oversight of the operating hours and admission fees of the facility by the eligible project sponsor through a legal agreement. All third party projects shall be open to the public in accordance with this rule.

(10) Non-compliance: The District shall terminate a project agreement and demand return of program funds disbursed to the project sponsor for non-compliance with any of the terms of the project agreement or this rule, if such non-compliance calls into question the ability of the applicant to complete the project. Failure of a project sponsor to comply with the provisions of this rule or the project agreement shall result in the District declaring the project sponsor ineligible for further participation in the program until such time as compliance has been met to the satisfaction of the District.

(11) Fees: Any public project eligible for District program funds that charges a fee or will charge a fee must create and maintain an enterprise fund for the public project that shall plan for and retain at all times sufficient funds for the on-going maintenance of the facility during its project life. Accounting records of the previous five years of the public project's enterprise fund will be submitted as part of any subsequent assistance program application to the District.

Rulemaking Authority 374.976(2) FS. Law Implemented 374.976(1), (2) FS. History–New 12-17-90, Amended 2-3-94, 2-6-97, Formerly 16T-2.004, Amended 5-18-98, 3-31-99, 5-25-00, 3-21-01, 7-30-02, 3-3-04, 4-21-05, 4-1-09, 2-22-10, 3-7-11, 3-7-12, 1-27-14, 2-17-15.

66B-2.005 Funds Allocation.

The Board will allocate funding for this program based upon the District's overall goals, management policies, fiscal responsibilities and operational needs for the upcoming year. Funding allocations to navigation related districts, member counties and local governments shall be based upon the proportional share of the District's ad valorem tax collections from each county. If funds are determined to be available for the program, the District will notify potential eligible governmental agencies of the availability of program funding. Applications will be reviewed by the Board utilizing District Forms No. 25-15 ~~91-25 and 91-25 (A) through (F)~~ Waterways Assistance Program Application and Evaluation Worksheet (effective date xx-xx-xx ~~1/2014~~), hereby incorporated by reference and available at: http://www.flrules.org/Gateway/reference.asp?No=Ref-17429 ~~http://www.flrules.org/Gateway/reference.asp?No=Ref-03568~~, and available from the District office or by download from the District's webpage at: www.aicw.org.

(1) Funding Assistance Availability: In as much as the District has other fiscal responsibilities and operational needs, financial assistance to eligible government agencies shall not exceed an amount equal to ninety (90) ~~eighty (80)~~ percent of the proportional share of the District's ad valorem tax collections from each county in which such agencies are located. The District may make an exception to this funding limitation, if funds are determined to be available based upon the District's overall goals, management policies, fiscal responsibilities and operational needs, or in counties that are recovering from a state of emergency declared under Chapter 252, F.S.

(2) Project Funding Ratio: All financial assistance and support to eligible governmental agencies shall require, at a minimum, equal matching funds from the project sponsor, with the exception of public navigation projects that meet the provisions of subsection 66B-2.005(6), F.A.C., land acquisition projects in accordance with subsection 66B-2.005(7), and Rule 66B-2.008, F.A.C., small-scale spoil island restoration and enhancement projects that meet the provisions of Rule 66B-2.014, F.A.C., derelict vessel projects consistent with Rule 66B-2.0015, F.A.C., and Waterway Cleanup Projects approved under Rule 66B-2.0016, F.A.C., and projects approved in counties recovering from a state of emergency. Applicant's in-house costs are limited pursuant to paragraph 66B-2.008(1)(c), F.A.C. All financial assistance to seaports shall require equal matching funds. The District shall contribute no more than fifty percent (50%) of the local share of the cost of an inlet management or beach renourishment project. The District shall not contribute funding to both the state and local shares of an inlet management or beach renourishment project.

(3) Pre-agreement Expenses: The project sponsor shall not commence work on an approved project element prior to the execution of the project agreement unless authorized by the Board during the review and funding approval process. Board authorization of pre-agreement expenses will be given for the commencement of work prior to the execution of a project agreement if the Board determines that there is a benefit to the District, its waterways or its constituents. All project costs must be incurred and work performed within the project period as stipulated in the project agreement unless pre-agreement costs are approved by the

Board. Pre-agreement expenses will be approved if they are consistent with the provisions of Rule 66B-2.008, F.A.C., and occur within the fiscal year of the grant application submission (October 1st to September 30th). Pre-agreement expenses, except for projects approved by the Board as multi-year projects, will be limited to fifty (50) percent of the project's total cost and if the expenses are eligible project expenses in accordance with this rule. Only one-half (1/2) or less of the approved pre-agreement expenses will be eligible for reimbursement funding from the District, except for projects approved by the Board as multi-year projects. The Board shall consider a waiver of the limitation on pre-agreement expenses for Small-Scale Derelict Vessel grants and land acquisition projects when the applicant demonstrates a direct need and benefit and the project is in accordance with the applicable provisions of Chapter 66B-2, F.A.C.

(4) Multi-Year Funding: The construction phase of projects that are large scale, involve multiple phases, have a construction time line of one year or longer, or are requesting a significant amount of assistance funding in relation to the total assistance available for the county where the project is located, will be reviewed and approved by the District Board for a multiple year period subject to budgeting and allocation pursuant to the provisions of Chapter 200, F.S. The determination by the Board to provide assistance funding on a multi-year basis can be made at any time during the application review process. All approved multi-year projects are limited to a maximum of two (2) additional funding requests.

(5) Inlet Management and Beach Renourishment: Projects and project elements in the categories of inlet management and beach renourishment shall be subject to the following provisions. The District shall contribute no more than fifty percent of the local share of the cost of the project. The District shall not contribute funding to both the state and local shares of an inlet management or beach renourishment project. Funding for the construction phase of an inlet management or beach renourishment project may be approved by the District Board for a multiple year period subject to budgeting and allocation pursuant to the provisions of Chapter 200, F.S. Additionally the following provisions shall be met for inlet management or beach renourishment projects:

(a) Inlet Management: Inlet management projects shall benefit public navigation within the District and shall be consistent with Department of Environmental Protection approved inlet management plans and the statewide beach management plan pursuant to Section 161.161, F.S. Prior to funding any inlet management project, the Board shall make a finding that the project is a benefit to public navigation in the District. Inlet management projects that are determined to be consistent with Department of Environmental Protection approved inlet management plans are declared to be a benefit to public navigation.

(b) Beach Renourishment: All projects in this category shall be consistent with the statewide beach management plan. Beach renourishment projects shall only include those beaches that have been adversely impacted by navigation inlets, navigation structures, navigation dredging, or a navigation project. Prior to funding any beach renourishment project, the Board shall make a finding that the beaches to be nourished have been adversly impacted by navigation inlets, navigation structures, navigation dredging or a navigation project. The determination of beach areas that are adversely impacted by navigation for the purposes of this program shall be made by Department of Environmental Protection approved inlet management plans. If state funding is not provided for a beach project, public access with adequate parking must be available in accordance with Chapter 161, F.S.

(6) Public Navigation: Projects or project elements in the category of public navigation that will qualify for up to seventy-five percent (75%) program funds must be within the Intracoastal Right-of-Way (ROW), or provide public navigation channel access to two or more publicly accessible launching, mooring or docking facilities. In addition, the following shall apply:

(a) Navigation channel dredging: The project sponsor must demonstrate that the source of channel sedimentation has been identified and is in the process of, or has been controlled, or that the frequency and amount of shoaling is such that dredging will provide an improvement to the channel that will last for twenty (20) years or more and therefore is more cost effective than identifying and correcting the cause of shoaling, or that the cost of identifying the source of channel sedimentation exceeds the cost of the dredging project.

(b) Navigation channel lighting and markers must be located on primary or secondary public navigation channels.

Navigation projects or project elements that have one facility open to the public will qualify for up to fifty percent (50%) program funding. Dredging that is associated or ancillary to another use (such as a boat ramp, marina or pier) will be prioritized according to the associated use.

(7) Land Acquisition: Land acquisition projects shall qualify for a maximum of fifty (50) percent funding. All pre-agreement expenses for land acquisition must be completed within one-year of the date of application for funding. Except for acquisition of publicly owned spoil disposal site, all funded land acquisition projects must construct the required boating access facility within 7 years of completion of the land acquisition, or the District may require the applicant to refund the program funding. Immediately upon acquiring title to the land, the applicant shall record a declaration of covenants in favor of the District stating that if the

required boating access facility is not constructed within 7 years and dedicated for the public use as a boating access facility in perpetuity after completion of construction, the District shall require the applicant to refund the program funding.

(8) Seaport Funding Eligibility: Financial assistance to seaports may exceed the proportional share of the District's ad valorem tax collections as set forth in subsection 66B-2.005(1), F.A.C., from the county in which such seaport is located if the seaport can demonstrate that a regional benefit occurs from the port's activities. Financial assistance to a seaport project that demonstrates a regional benefit shall not exceed an amount equal to (i) the proportional share of the District's ad valorem tax collections as set forth in subsection 66B-2.005(1), F.A.C., from the counties where the benefit is demonstrated less (ii) funding allocated in the same fiscal year to all other local government projects funded in those counties.

Rulemaking Authority 374.976(2) FS. Law Implemented 374.976(1), (3) FS. History–New 12-17-90, Amended 6-24-93, 9-5-96, 2-6-97, Formerly 16T-2.005, Amended 5-17-98, 8-26-99, 3-21-01, 7-30-02, 3-3-04, 4-21-05, 4-24-06, 4-15-07, 3-25-08, 4-1-09, 3-7-11, 3-7-12, 4-10-13, 1-27-14, 5-15-16, 3-25-21, xx-xx-xx.

66B-2.006 Application Process.

(1) Application Period: With the exception of eligible Disaster Relief Projects, eligible Small-Scale Spoil Island Restoration and Enhancement Projects eligible Small-Scale Derelict Vessel Applications and Waterway Cleanup Events, all applications for assistance through this program will be submitted during the authorized submission period that shall be established by vote of the Board at a scheduled meeting.

(2) Application Forms: Florida Inland Navigation District Waterways ~~Assistance Program Project Application FIND Form Number 90-22 (effective date 4-24-06) and the Waterway~~ Assistance Program Application and Evaluation Worksheet No. 25-15 ~~91-25 and 91-25 (A) through (F)~~ (effective date xx-xx-xx ~~1/2014~~) https://www.flrules.org/Gateway/reference.asp?No=Ref-17429 is ~~are~~ hereby incorporated by reference and available from the District office. With the exception of projects eligible under the Small-Scale Spoil Island Restoration and Enhancement program, the Small-Scale Derelict Vessel program, and eligible Waterway Cleanup Events, all applications for financial assistance and support through this program from member counties and local governments shall be made on ~~Form Number FIND 90-22 and~~ the Watereways ~~Waterway~~ Assistance Program Project Application and Evaluation Worksheet No. 25-15 ~~91-25 and 91-25 (A) through (F)~~ and shall include a detailed cost estimate submitted on FIND Form No. 25-20 ~~90-25~~, Florida Inland Navigation District Assistance Program Project Cost Estimate (effective date xx-xx-xx ~~4-24-06~~) http://www.flrules.org/Gateway/reference.asp?No=Ref-17337, hereby incorporated by reference and available from the District office. In addition, all applicants shall submit a complete and detailed Project Timeline (FIND FORM No. 25-25 ~~96-10~~) (effective date xx-xx-xx ~~4-15-07~~) http://www.flrules.org/Gateway/reference.asp?No=Ref-17436 .

(3) Sponsor Resolution: The project sponsor shall approve the submission of an application by official resolution from its governing board or commission. Said resolution shall be made on FIND Form No. 25-30 ~~90-21~~, Resolution for Assistance Under the Florida Inland Navigation District Waterways Assistance Program (effective date xx-xx-xx ~~10-14-92~~) http://www.flrules.org/Gateway/reference.asp?No=Ref-17440, hereby incorporated by reference and available from the District office.

(4) Attorney's Certification: If the application is for a project that is a land based development project the applicant shall submit an Attorney's Certification of Title, FIND Form Number 25-35 ~~94-26~~ (effective date xx-xx-xx ~~5-25-00~~) http://www.flrules.org/Gateway/reference.asp?No=Ref-17412, hereby incorporated by reference and available from the District office.

(5) Maps and Geographic Information: All applicants shall be required to submit, at minimum, the following geographic information: A County location map, a project location map, a project boundary map, and a clear and detailed site development map for land development projects.

(6) Application Review: Prior to submitting the application to the District office, applicants ~~Applicants~~ shall obtain the local FIND Commissioner's initials on Waterways Assistance Program Applicant Checklist Form No. 25-10 ~~90-26~~ ~~https://www.flrules.org/Gateway/reference.asp?No=Ref-17410~~ ~~prior to submitting the application to the District office~~, hereby incorporated by reference and available at https://www.flrules.org/Gateway/reference.asp?No=Ref-17410. It is the applicant's responsibility to make timely arrangements for the local FIND Commissioner's review. In the absence of extenuating circumstances outside of the applicant's control as determined by the Board of Commissioners, an application shall not be considered complete if it does not include the local FIND commissioner's initials on Form No. 25-10 ~~90-26~~. Upon receipt in the District office, staff will review the applications for completeness of the informational requirements identified in the Application Checklist, FIND Form Number 25-10 ~~90-26~~ (effective date xx-xx-xx ~~7-30-02~~), and for compliance with the eligibility requirements of this rule. When an

application is determined by staff to be incomplete or ineligible, staff will immediately inform the applicant by mail or email. The applicant will then have until the date established by the Board in the application package to bring the application into compliance. If the applicant fails to provide a complete application in compliance with these rules, the application will not be considered for funding. In order to have a complete application, the applicant shall not only submit the forms required under Rule 66B-2.006, F.A.C., and any other information requirements identified in the Application Checklist (FIND Form Number 25-10 ~~90-26~~), but such forms and other submitted information must be completely filled out, executed as applicable, and also establish compliance with Chapter 66B-2, F.A.C.

(7) Interlocal Agreements: Applications that the Board determines will directly benefit the maintenance of the Atlantic Intracoastal Waterway channel as documented by the District's long range dredged material management plans, will directly benefit the maintenance of the Okeechobee Waterway channel as documented by the District's long range dredged material management plan, will directly benefit the maintenance or improvement of District property, right-of-way or navigation interests, or have multiple funding partners including the Corps of Engineers as the project manager can qualify for project assistance through an interlocal agreement pursuant to Chapter 163 or Section 374.984(6)(a), F.S. District staff will identify these applications and present them to the Board for their determination as to funding. Interlocal agreement projects shall comply with all other provisions of this rule, except for pre-agreement expenses, permitting and property control requirements.

(8) Application Presentations: Applications determined to be complete and in compliance with this rule will be forwarded to the Board for review and then scheduled for presentation to the Board at a scheduled meeting of the Board. Applicants can decline to make a presentation to the Board by submitting a written request.

(9) Application Evaluation and Rating Score: Following the presentations, the Board will review the applications and evaluate them using the Waterways Assistance Program Application and Evaluation Worksheets No. 25-15 ~~91-25 (A) through (F)~~ for Waterways Assistance Program applications. The total points awarded to each application by the Commissioners will be averaged to determine an application's final rating score. The final rating score for each application must equal or exceed 35 points for the application to be considered for funding assistance. Reconsideration of any application with a final rating score of less than 35 points will only occur if the majority of the Commissioners evaluating the project rated the project equal to or exceeding 35 points and two-thirds of the Commissioners vote for reconsideration of the application. ~~Only Applicants that are eligible under Rule 66B-2.0061, F.A.C., "Disaster Relief Applications," shall complete FIND Form No. 91-25F Emergency Re-Construction (effective date 4-24-06, 1/2014).~~

(10) Funding Determination: The Board will hold a funding allocation meeting at which time the Board will determine the allocation of funds, if any, to each project and the projects will be ranked by overall average score to facilitate final funding decisions by the Board. Allocations will be based in part upon the cumulative score of the applications as calculated from the Project Evaluation and Rating Form. Allocations will also be based upon the specific needs of the individual counties.

Rulemaking Authority 374.976(2) FS. Law Implemented 374.976(1) FS. History–New 12-17-90, Amended 9-2-92, 6-24-93, 4-12-95, Formerly 16T-2.006, Amended 5-25-00, 3-21-01, 7-30-02, 3-20-03, 4-21-05, 4-24-06, 4-15-07, 3-25-08, 3-7-11, 1-27-14, xx-xx-xx.

66B-2.0061 Disaster Relief Applications.

Disaster Relief applications may be submitted to the District and considered by the Board at any time during the year to provide assistance to an eligible applicant for the removal of navigation obstructions and repair or replacement of waterway facilities damaged by a declared natural disaster. Applicants for Disaster Relief shall use the same forms listed in subsection 66B-2.006(2), F.A.C. The District shall consider these applications in accordance with these rules.

Rulemaking Authority 374.976(2) FS. Law Implemented 374.976(1) FS. History–New 6-24-93, Amended 2-6-97, Formerly 16T-2.0061, Amended 4-24-06, 3-25-21.

66B-2.007 Application Form.

Rulemaking Authority 374.976(2) FS. Law Implemented 374.976(1) FS. History–New 12-17-90, Amended 6-24-93, 2-3-94, 4-12-95, Formerly 16T-2.007, Repealed 7-30-02.

66B-2.008 Project Eligibility.

(1) Eligible Projects: Financial assistance and support through this program shall be used to plan or carry out public navigation

and anchorage management, public recreation, environmental education, boating safety, acquisition and development of spoil sites and publicly owned commercial/industrial waterway access directly related to the waterways, acquisition and development of public boat ramps, launching facilities and boat docking and mooring facilities, inlet management, maritime management planning, environmental mitigation and beach renourishment.

(a) Program funds may be used for projects such as acquisition, planning, development, construction, reconstruction, extension, or improvement, of the following types of projects for public use on land and water. These project types will be arranged into a priority list each year by vote of the Board. The priority list will be distributed to applicants with the project application.

1. Public navigation channel dredging,

2. Public navigation aids and markers,

3. Inlet management projects that are a benefit to public navigation in the District,

4. Public shoreline stabilization directly benefiting the District's waterway channels,

5. Acquisition and development of publicly owned spoil disposal site and public commercial/industrial waterway access,

6. Waterway signs and buoys for safety, regulation or information,

7. Acquisition, dredging, shoreline stabilization and development of public boat ramps and launching facilities,

8. Acquisition, dredging, shoreline stabilization and development of public boat docking and mooring facilities,

9. Derelict Vessel Removal,

10. Waterways related environmental education programs and facilities,

11. Public fishing and viewing piers,

12. Public waterfront parks and boardwalks and associated improvements,

13. Maritime Management Planning,

14. Waterways boating safety programs and equipment,

15. Beach renourishment on beaches adversely impacted by navigation inlets, navigation structures, navigation dredging, or a navigation project; and,

16. Environmental restoration, enhancement or mitigation projects; and,

17. Other waterway related projects. Waterway projects that do not meet specific criteria in subsection 66B-2.005(5) or (6) or subparagraphs 66B-2.008(1)(a)1.-16., F.A.C., but are located on eligible waterways shall be considered for funding under the priority listing of "other waterway related project" and eligible for 25% funding.

(b) Ineligible Projects or Project Elements. Project costs ineligible for program funding or matching funds will include: contingencies, miscellaneous, reoccurring personnel related costs, irrigation equipment, ball-courts, park and playground equipment, and any extraneous recreational amenities not directly related to the waterway such as the following:

1. Landscaping that does not provide shoreline stabilization or aquatic habitat,

2. Restrooms for non-waterway users,

3. Roadways providing access to non-waterway users,

4. Parking areas for non-waterway users,

5. Utilities for non-waterway related facilities,

6. Lighting for non-waterway related facilities,

7. Project maintenance and maintenance equipment,

8. Picnic shelters and furniture for non-waterway related facilities,

9. Vehicles to transport vessels; and,

10. Operational items such as fuel, oil, etc.

11. Office space that is not incidental and necessary to the operation of the main eligible public building; and,

12. Conceptual project planning, including: public surveys, opinion polls, public meetings, organizational conferences; and,

13. Inlet maintenance.

(c) Project Elements with Eligibility Limits: Subject to approval by the Board of an itemized expense list:

1. The following project costs will be eligible for program funding or as matching funding if they are performed by an independent contractor:

a. Project management, administration and inspection,

b. Design, permitting, planning, engineering or surveying costs for completed construction project,

c. Restoration of sites disturbed during the construction of an approved project,

d. Equipment costs.

Before reimbursement is made by the District on any of the costs listed in subparagraph 1., above, a construction contract for the project, approved and executed by the project sponsor and project contractor must be submitted to the District.

2. Marine fire-fighting, Marine law enforcement and other vessels are eligible for a maximum of $125,000 in initial District funding. All future replacement and maintenance costs of the vessel and related equipment will be the responsibility of the applicant.

3. Waterway related environmental education facility funding will be limited to those project elements directly related to the District's waterways.

(d) Phasing of Projects: Applications for eligible waterway projects may be submitted as a phased project where Phase I will include the design, engineering and permitting elements and Phase II will include the construction of the project. A description and cost estimate of the Phase II work shall be submitted along with the Phase I application for Board review.

(2) Property Control: The site of a new proposed land-based development project, with the exception of those projects requesting Small-Scale Spoil Island Restoration and Enhancement funding, shall be dedicated for the public use for which the project was intended for a minimum period of 35 years after project completion. Such dedication shall be in the form of a deed, lease, management agreement or other legally binding document and shall be recorded in the public property records of the county in which the property is located. This property control requirement also applies to a project site owned by another governmental entity. The governmental entity that owns the project site may be joined as a co-applicant to meet this property control requirement. Existing land based development projects that are being repaired, replaced or modified must demonstrate that the project site has been dedicated for public use for at least 25 years with at least 10 years remaining on the dedication document. Property shall also be deemed dedicated for public use if:

(a) The property has been designated for the use for which the project is intended (even though there may have been no formal dedication) in a plat or map recorded prior to 1940, or

(b) The project sponsor demonstrates that it has had exclusive control over the property for the public use for which the project is intended for a period of at least 30 years prior to submission of the application, or

(c) There is no ongoing litigation challenging the designated use of the property as shown on the plat or map, nor has there been any judicial determination contrary to the use by the public for the use shown on the plat or map.

(3) Permits: The project sponsor is responsible for obtaining and abiding by any and all federal, state and local permits, laws, proprietary authorizations and regulations in the development and operation of the project. Applicants for construction projects that include elements that require state or federal environmental permits or proprietary authorizations will demonstrate that all required environmental permitting and authorizations will be completed by the third Monday in September. This demonstration will be by submission of the required environmental permit(s) and authorizations, or by submission of a letter from the agency(s) stating that a permit or authorization is not required. Failure to timely submit the required environmental permits and authorizations or letters stating such permits or authorizations are not required shall result in the application not being considered for funding.

(4) Public Marina Qualifications: All public marina projects funded through this program shall include sewage pumpout facilities for vessels, unless the applicant can demonstrate that inclusion of such a facility is physically, operationally or economically impracticable. All public marina projects funded through this program shall have at least ten percent (10%) of their slips or mooring areas available for transient vessels. Public marina dockage rates shall be within market comparison of the dockage rates of other area marinas. The public marina will be required to establish and maintain an accounting of the funds for the facility and shall plan for and retain at all times sufficient funds for the on-going maintenance of the facility during its project life.

(5) The District may assist eligible local governments with efforts to prepare and implement a comprehensive maritime management plan. The plan shall be utilized by the eligible government to promote and maximize the public benefit and enjoyment of eligible waterways, while identifying and prioritizing the waterway access needs of the community. The plan should not duplicate any existing or ongoing efforts for the same waterway or water shed, nor shall the District participate in any effort that does not address the basic maritime needs of the community.

(a) Existing plans may be updated at reasonable intervals or amended to include waterway areas previously not included in the original effort. Public, government, environmental, industry and other pertinent interest groups shall be solicited and included for input in the planning process.

(b) The plan shall be utilized as a tool to provide a minimum 5-year planning analysis and forecast for the maritime needs of the community, and shall include, at minimum, the following:

1. Public boat ramp and ramp parking inventory and analysis.

2. Public mooring and docking facility analysis, including day docks and transient slips.

3. Commercial and working waterfront identification and needs analysis.

4. The identification, location, condition and analysis of existing and potential navigation channels.

5. An inventory and assessment of accessible public shorelines.

6. Public Waterway transportation needs.

7. Environmental conditions that affect boat facility siting, a current resource inventory survey, and restoration opportunities.

8. Economic conditions affecting the boating community and boating facilities.

9. Acknowledgment and coordination with existing data and information, including an emphasis on the Intracoastal Waterway.

(c) Projects requested for assistance program funding shall be consistent with the applicant's maritime management plan. The applicant should utilize the plan to assist in prioritizing waterway improvement projects.

(6) All eligible environmental restoration, enhancement or mitigation projects as well as the environmental restoration, enhancement or mitigation components of other types of projects shall be required to pursue and assign any available mitigation credits to the District for that share of the project funded through the District's Assistance Program. All eligible environmental restoration, enhancement or mitigation projects shall provide public access where possible.

(7) Final Decisions: The Board will make all final decisions on the eligibility of a Project or specific project costs.

Rulemaking Authority 374.976(2) FS. Law Implemented 374.976(1)-(3) FS. History–New 12-17-90, Amended 9-2-92, 6-24-93, 2-3-94, 4-12-95, 9-5-96, 2-6-97, Formerly 16T-2.008, Amended 5-17-98, 3-31-99, 5-25-00, 3-21-01, 7-30-02, 3-20-03, 3-3-04, 4-15-07, 3-25-08, 4-1-09, 2-22-10, 3-7-11, 3-7-12, 1-27-14, 2-17-15, 2-21-16, 3-25-21, 3-9-23, 3-11-24.

66B-2.009 Project Administration.

The District will appoint a project manager who shall be responsible for monitoring the project and the project agreement. The project manager shall also be responsible for approving all reimbursement requests. The project sponsor shall appoint a liaison agent, who will be a member of the eligible applicant's staff, to act on its behalf in carrying out the terms of the project agreement. Administration of the project will be as follows:

(1) Project Agreement: For each funded project, the District and the project sponsor will enter into a project agreement. The project agreement shall be executed and returned by the project sponsor within six (6) months of the approval of the project funding and prior to the release of program funds, setting forth the mutual obligations of the parties concerning the project. The project agreement shall incorporate the applicable policies and procedures of the program as outlined in this rule. Project agreements will be for a two-year period with the possibility for one, one-year extension. Any request for a one-year extension of funding shall require submittal by the PROJECT SPONSOR of a request for extension to the DISTRICT no later than July of fiscal year two of the approved project. This request will then be considered by the DISTRICT Board, whose decision shall be final. In review of these requests, the Board will take into consideration the current status and progress of the project and the ability of the applicant to complete the project within one additional year.

(2) Matching Funds: The project sponsor shall clearly identify and enumerate the amount and source of the matching funds it will be using to match the program funds supplied by the District for an approved project. The project sponsor shall provide suitable evidence that it has the matching funds available at the time the project agreement is executed.

(3) Agreement Modification: All proposed changes to the project agreement must be submitted to the District in writing by the project sponsor accompanied by a statement of justification for the proposed changes. All project agreement amendments shall be approved by the District Board, except that the Executive Director may approve a minor project agreement amendment for a project within a county with the local District commissioner's concurrence. A minor project amendment shall not change the approved project's category, result in a reallocation of more than 35% of the approved funding of the project among project elements, nor allow for a greater than 35% change in the project scale or scope of work. Project agreement amendments will not include a change to the approved project's location or a change in the approved project's purpose or project type. Agreed changes shall be evidenced by a formal amendment to the project agreement and shall be in compliance with these rules.

(4) Project Reporting: The liaison agent will submit quarterly reports to the project manager summarizing the work accomplished since the last report, problems encountered, percentage of project completion and other appropriate information. These reports shall continue throughout the length of the project period until completion of the project. The report shall be submitted on Form 95-02, "Assistance Program Project Quarterly Status Report," dated 7-30-02, hereby incorporated by reference and available at the District office. A Final Project Report shall be submitted at the completion of the project and shall at minimum include:

project summary, photo of completed project, final cost, project benefits to the waterway and location address.

(5) Reimbursement Requests: The liaison agent may submit periodic reimbursement requests during the project period in accordance with Rule 66B-2.011, F.A.C. The project manager will approve or disapprove all reimbursement requests. The final payment of program funds will be made upon certified completion of the project by the District.

(6) Project Inspection: Upon reasonable request, the project manager shall have the right to inspect the project and any and all records relating to the project.

(7) Project Completion: The project shall be completed within three (3) years of the date of the beginning of the District's first fiscal year for which the project was approved. If the completion of a project is impacted by a declared state of emergency and the Board waives this rule section, the extension of time granted shall not exceed one additional three (3) year period.

(8) Project Completion Requirements: Upon completion of the project, the liaison agent shall provide the following to the project manager:

(a) A Project Completion Certificate, FIND Form No. 90-13 (effective date 7-30-02), hereby incorporated by reference and available from the District office, which certifies that the project was completed in accordance with the project agreement and the final project plans.

(b) A final reimbursement request accompanied by all required billing statements and vouchers.

(c) Photograph(s) showing the installation of the sign required by Rule 66B-2.013, F.A.C.

(d) Photograph(s) of the completed project clearly showing the program improvements.

(9) Project Completion Review: The project manager will review the project completion package and will authorize or reject the final reimbursement payment which will include all retained funds from previous requests.

Rulemaking Authority 374.976(2) FS. Law Implemented 374.976(1) FS. History–New 12-17-90, Formerly 16T-2.009, Amended 3-21-01, 7-30-02, 3-7-11, 1-27-14, 3-25-21.

66B-2.010 Project Agreement.

Rulemaking Authority 374.976(2) FS. Law Implemented 374.976(1) FS. History–New 12-17-90, Amended 9-5-96, Formerly 16T-2.010, Amended 3-21-01, Repealed 7-30-02.

66B-2.011 Reimbursement.

The District shall release program funds in accordance with the terms and conditions set forth in the project agreement. This release of program funds shall be on a reimbursement only basis. The District shall reimburse the project sponsor for project costs expended on the project in accordance with the project agreement. Project funds to be reimbursed will require the submission of a Reimbursement Request Form and required supporting documents, FIND Form No. 90-14 (effective date 7-30-02) hereby incorporated by reference and available from the District office.

(1) Authorized Expenditures: Project funds shall not be spent except as consistent with the project agreement cost estimate that was approved by the Board, which shall be an attachment to the project agreement. This cost estimate will establish the maximum funding assistance provided by the District and the percentage of funding provided by each party to the project. The District will pay the lesser of:

(a) The percentage total of project funding that the Board has agreed to fund, or

(b) The maximum application funding assistance amount.

(2) Phase I Reimbursement: In accordance with these rules, reimbursement cannot be made on a Phase I application until a construction contract is executed by the applicant for the construction phase of the project. If the Phase I project is completed but a construction contract is not executed by the three (3) year project deadline, then the District shall only allow one (1) year from the Phase I project deadline to enter into the required construction contract before the Phase I funding is cancelled.

(3) Reimbursement Requests: All project costs shall be reported to the District and summarized on the Reimbursement Request Form. All requests for reimbursement shall include supporting documentation such as billing statements for work performed and cancelled payment vouchers for expenditures made.

(4) Retainage: The District shall retain ten percent (10%) of all reimbursement payments until final certification of completion of the project. The District shall withhold any reimbursement payment, either in whole or part, for non-compliance with the terms of this agreement.

(5) Check Presentations: A District representative shall present the final reimbursement check to the project sponsor during a

public commission meeting or public dedication ceremony for the project facility.

(6) Recovery of Additional Project Funding: If the project sponsor receives additional funding for the project costs from another source that was not identified in the original application and that changes the agreement cost-share percentage, the project sponsor shall proportionately reimburse the District's program funds equal to the cost-share percentage in the approved project agreement. The project sponsor shall promptly notify the District of any project payments it receives from a source other than the District.

Rulemaking Authority 374.976(2) FS. Law Implemented 374.976(1) FS. History–New 12-17-90, Amended 6-24-93, Formerly 16T-2.011, Amended 3-31-99, 7-30-02, 3-7-11.

66B-2.012 Accountability.

The following procedures shall govern the accountability of program funds:

(1) Accounting: Each project sponsor is responsible for maintaining an accounting system which meets generally accepted accounting principles and for maintaining such financial records as necessary to properly account for all program funds.

(2) Quarterly Reports: The project sponsor shall submit quarterly project status reports to FIND in accordance with subsection 66B-2.009(4), F.A.C.

(3) Completion Certification: All required final completion certification documents and materials as outlined in subsection 66B-2.009(8), F.A.C., of this rule shall be submitted to the District prior to final reimbursement of program funds.

(4) Auditing: All project records including project costs shall be available for review by the District or by an auditor selected by the District for 3 years after completion of the project. Any such audit expenses incurred shall be borne entirely by the project sponsor.

(5) Project Records: The project sponsor shall retain all records supporting project costs for three years after either the completion of the project or the final reimbursement payment, whichever is later, except that should any litigation, claim, or special audit arise before the expiration of the three year period, the project sponsor shall retain all records until the final resolution of such matters.

(6) Repayment: If it is found by any State, County, FIND, or independent audit that program funds have not been used in accordance with this rule and applicable laws, the project sponsor shall repay the misused program funds to the District.

Rulemaking Authority 374.976(2) FS. Law Implemented 374.976(1) FS. History–New 12-17-90, Formerly 16T-2.012, Amended 7-30-02.

66B-2.013 Acknowledgement.

The project sponsor shall erect a permanent sign, approved by the District, at the entrance to the project site which indicates the District's participation in the project. This sign shall contain the FIND logo. In the event that the project sponsor erects a temporary construction sign, this sign shall also recognize the District's participation. If the final product of the project is a report, study or other publication, the District's sponsorship of that publication shall be prominently indicated at the beginning of the publication. If the project results in an educational display, the District's logo and a statement of the District's participation in the project shall be contained in the display.

Rulemaking Authority 374.976(2) FS. Law Implemented 374.976(1) FS. History–New 12-17-90, Formerly 16T-2.013, Amended 2-22-10.

66B-2.014 Small-Scale Spoil Island Restoration and Enhancement Projects.

Proposals shall be accepted for the restoration or enhancement of spoil islands and natural islands within the District's waterways for recreational, navigational, educational, and environmental purposes. The applicable provisions of this rule apply to these applications with the following additions or exceptions:

(1) Application Procedure – A Request for Proposals procedure will be used to request proposals for consideration. Proposals shall follow the format described in FIND Document #03-02, Call for Proposals – Small-Scale Spoil Island Restoration and Enhancement Program (effective date 7-30-02), hereby incorporated by reference and available from the District office. Proposals may be submitted to the District and considered by the Board at any time during the year.

(2) Matching Funds: Small-scale spoil island restoration and enhancement may qualify for up to ninety percent (90%) program funds. The applicant's ten percent (10%) matching funds may include in-kind contribution pursuant to paragraph 66B-2.014(4)(b), F.A.C.

(3) Eligibility: All proposals must meet the following eligibility criteria to be considered for funding:

(a) Management Plan Compliance: Projects shall be in compliance with the provisions of any Spoil Island Management Plans or other management plans that govern the Project site.

(b) Property Control: The Project Sponsor must have written property rights on the Project site to construct and maintain the Project for a minimum of five years. Such property rights can be in the form of a lease, interlocal agreement, use agreement or other legal form approved by the District. The applicant shall include a map clearly delineating the location of all proposed work included in the application.

(4) Funds Allocation: Funds shall be allocated pursuant to Rule 66B-2.005, F.A.C., subject to the exceptions identified in this rule, and with the following additions:

(a) The District shall fund a maximum of up to $20,000 ~~$10,000~~ per project, not to exceed $60,000 ~~$30,000~~ per County, per fiscal year.

(b) The Project Sponsor may contribute in-kind construction labor; such in-kind construction labor costs will be valued at the Independent Sector estimated national value of each volunteer hour. No administrative costs can be incorporated into the Project as Project costs.

(c) The funding provided by the District shall only be allocated for specific Project expenses such as construction materials, trash removal and management, sign installation, plant materials, herbicides, etc. The funding provided by the District shall not be allocated for parties, food or beverages.

Rulemaking Authority 374.976(2) FS. Law Implemented 374.976(1) FS. History–New 7-30-02, Amended 4-24-06, 3-7-11, 3-25-21, 3-11-24,xx-xx-xx..

66B-2.015 Small-Scale Derelict Vessel Removal Projects.

Proposals shall be accepted for financial assistance for the removal of derelict vessels within the District's waterways. The applicable provisions of this rule apply to these applications with the following additions or exceptions:

(1) Application Procedure – Applications shall be submitted on a completed FIND Form No. 05-01 (Small-Scale Derelict Vessel Removal Program) (effective date 4-24-06), and FIND Form No. 01-06 (Small-Scale Derelict Vessel Removal Program – Project Cost Estimate), (effective date 4-24-06), hereby incorporated by reference and available from the District office. Applications may be submitted to the District and considered by the Board at any time during the year.

(2) The District shall only fund applicants that have identified derelict vessels to be removed and have a current bid for removal for such vessels, or have completed the removal of such vessels within the 6 months preceding the application, subject to eligibility under these program rules.

(3) The program must be sponsored by an eligible government agency or not-for-profit organization.

(4) District funding shall be limited to $150,000.00 per county, per year, provided on a reimbursement basis only. The limitation on pre-agreement expenses may be waived by the Board in accordance with subsection 66B-2.005(3), F.A.C.

(5) The eligible applicant must provide the remaining matching funds for project completion. In no case shall the District's cost-share contribution exceed 75% of the total project costs. In-house project management or administration costs are not eligible costs or matching costs.

(6) The derelict vessel must be located in the District's Waterways, as defined in Rule 66B-2.003, F.A.C. The applicant shall include a map clearly delineating the location of all vessels included in the application.

(7) The District shall be recognized when possible in all written, audio or video advertising and promotions as a participating sponsor of the program.

(8) The funding provided by the District shall only be allocated for removal of derelict vessels. The District is providing program reimbursement funds only and shall be held harmless with regards to the activities initiated by the applicant.

(9) The applicant shall be responsible for all maintenance, management, disposal and operating expenses associated with the program.

(10) Funds derived from the sale of any derelict vessels or vessel parts removed through this grant program must be reinvested into the applicant's derelict vessel removal program.

(11) The District Board shall make all final decisions concerning the provision of funding for this program.

Rulemaking Authority 374.976(2) FS. Law Implemented 374.976(1) FS. History–New 4-24-06, Amended 4-15-07, 3-25-08, 3-7-11, 1-27-14, 3-25-21, 3-9-23, 3-11-24.

66B-2.016 Waterways Cleanup Events.

Proposals shall be accepted for financial assistance for the organized removal of refuse within the District's waterways. The applicable provisions of this rule apply to these applications with the following additions or exceptions:

(1) Application Procedure: Prior to the event, a request for funding shall be submitted to the District by means of a cover letter detailing the occurrence of the cleanup, contact information, a map of the cleanup locations and the general parameters of the event. In addition, the Applicant will submit a detailed budget clearly delineating the expenditure of all District funds, as well as the overall general budget of the event. Proposals may be submitted to the District and considered by the Board at any time during the year.

(2) Availability: The District shall fund a maximum of one clean-up program per waterway, per year within a county, with exception to the provisions of subsections (8) through (10), below.

(3) Applicant Eligibility: The clean-up program must be sponsored by a government agency or a registered not-for-profit corporation.

(4) Funding: District funding shall be limited to $5,000 per waterway, per county, except for the provisions of subsections (8) through (10), below.

(5) The District shall be recognized in all written, online, audio or video advertising and promotions as a participating sponsor of the clean-up program.

(6) Funding Eligibility: The funding provided by the District shall only be allocated to reimburse the applicant for out of pocket expenditures related to specific cleanup program expenses such as trash bags, trash collection, haul and landfill fees, gloves, advertising, T-shirts, and related expenses. The funding provided by the District shall not be allocated for parties, meetings, food or beverages.

(7) The District Board shall make all final decisions concerning the provision of funding for a clean-up program.

In addition to the requirements stated above, a cleanup program implementing all of the following additional incentives will qualify for up to additional $5,000 in clean up funds.

(8) The clean-up program budget must provide equal or greater matching funds for all Navigation District funding.

(9) The applicant shall tally and report the composition and location of the waterway-related debris, with the goal to show definitive progress in the amount of refuse collected, a reduction in the overall debris in the waterway, or an increase in the number of additional waterway areas included in the clean up.

(10) For each additional $1,000 in Navigation District funding, the applicant shall coordinate a minimum of one waterway collection point or clean up area, or an applicant can conduct an additional waterway cleanup program for the waterway areas.

Rulemaking Authority 374.976(2) FS. Law Implemented 374.976(1) FS. History–New 3-7-11.

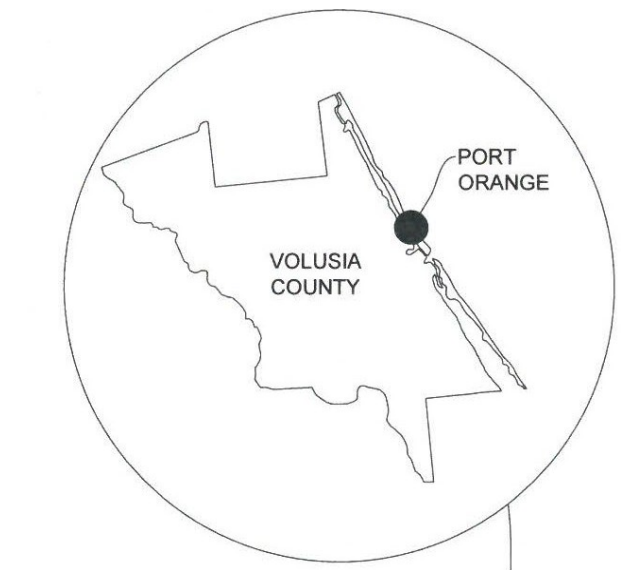

Riverwalk Day Dock Location

Map created by the City of Port Orange Community Development Department

Drawing Name: C:\Users\DMC-User\AppData\Local\Temp\AcPublish_38288\PO Day Docks 90%.dwg By: DMC-User Tab: AERIAL (2) 10/25/2024

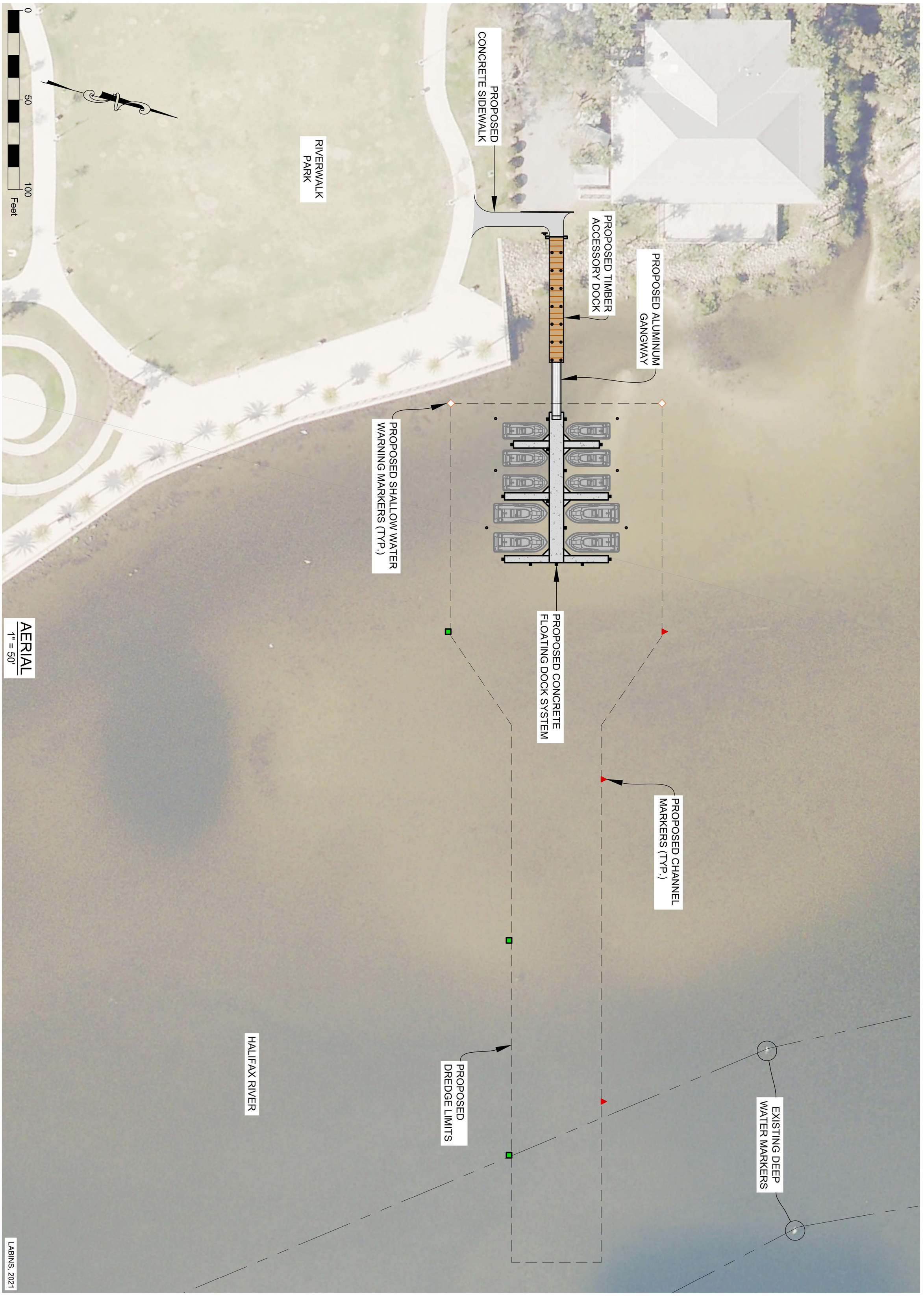

AERIAL
1" = 50'

Dredging & Marine Consultants
DMC
ENGINEERS • SCIENTISTS

4643 S. Clyde Morris Blvd
Unit 302
Port Orange, FL 32129
Phone:(386) 304-6505
Fax:(386) 304-6506
www.dmces.com

CURTIS N. TODD, P.E.
FLORIDA LICENSE No. 37136

PROJECT NAME:
RIVERWALK PARK
DAY DOCKAGE

CLIENT:
CITY OF PORT ORANGE

DRAWING: AERIAL
DMC JOB NO. 24-026-36
DRAWN BL | CAD C3D
CHECKED - | SCALE AS SHOWN
APPROVED - | DATE 10-25-2024
SHEET NO. C-02

City of Port Orange Day Dock at Riverwalk

Dredging & Marine Consultants
DMC
ENGINEERS • SCIENTISTS

Estimate of Probable Cost

ITEM No.	DESCRIPTION	QUANTITY	UNIT	PRICE / UNIT	PRICE
1	Mobilization and Demobilization	1	LS	$ 100,000.00	$ 100,000.00
2	Construction and As-Built Survey	1	LS	$ 10,000.00	$ 10,000.00
3	Demolition, Hauling, and Disposal	1	LS	$ 10,000.00	$ 10,000.00
4	Vibration Monitoring	1	LS	$ 15,000.00	$ 15,000.00
5	Environmental Compliance (Including FDOT Type II Floating Turbidity Barrier)	1	LS	$ 20,000.00	$ 20,000.00
6	Temporary Traffic Control	1	LS	$ 5,000.00	$ 5,000.00
7	Clearing, Grubbing, Seeding and Sod	1	LS	$ 5,000.00	$ 5,000.00
8	Mechanical Dredging (Hauling and Placement at Final Disposal Site)	11,200	CY	$ 65.00	$ 728,000.00
9	Timber Dock (Includes 12-inch Timber Piles)	560	SF	$ 175.00	$ 98,000.00
10	Aluminum Gangway (30' x 5')	1	EA	$ 30,000.00	$ 30,000.00
11	Concrete Floating Dock System (Includes 14-inch Concrete Piles & 12-inch Timber Mooring Pil	1,232	SF	$ 350.00	$ 431,200.00
12	Private Aides to Navigation	8	EA	$ 2,000.00	$ 16,000.00
13	Sidewalks	50	SY	$ 100.00	$ 5,000.00
				Sub Total	**$ 1,473,200.00**
				CONSTRUCTION CONTINGENCY ALLOWANCE (10% of Base Bid)	**$ 147,320.00**
				TOTAL ESTIMATED AMOUNT (Based on Estimated Unit Prices & Quantities)	**$ 1,620,520.00**

LS=Lump Sum; LF= Linear Foot; CY=Cubic Yard; SY= Square Yard; EA= Each; TN=Ton; SF= Square Foot

ATTACHMENT E-6

ATTORNEYS CERTIFICATION OF TITLE 2025

(See Rule 66B-2.006(4) & 2.008(2) FAC)

OFFICE OF THE CITY ATTORNEY
CITY OF PORT ORANGE
1000 City Center Circle
Port Orange, Florida 32129

March 3, 2025

To WHOM IT MAY CONCERN:

I, Shannon K. Balmer, am the Senior Assistant City Attorney for the *City of Port Orange,* Florida. I hereby state that I have examined a copy of a deed for Parcel No. 6303-10-01-0020 from William Mack Ballard and Amelia J. Ballard, husband and wife, dated May 29, 1998, and recorded in Official Records Book 4311, page 1903, Public Records of Volusia County, Florida to the *City of Port Orange, a Florida municipal corporation*, conveying Fee simple interest in the following property:

See Exhibit "A", attached hereto and made a part hereof by reference.

I have also examined a document showing that this property is listed on the tax rolls as belonging to the ***City of Port Orange, a Florida municipal corporation.*** Finally, I have also examined such documents and records as necessary for this certification.

This property is what is now called "Riverwalk Day Dock Project Phase II".

I Certify that the ***City of Port Orange, a Florida municipal corporation*** does in fact own this property for approximately 27years.

Very truly yours,

Shannon K. Balmer
Senior Assistant City Attorney for City of Port Orange

ATTACHMENT E-6

ATTORNEYS CERTIFICATION OF TITLE 2025

(See Rule 66B-2.006(4) & 2.008(2) FAC)

OFFICE OF THE CITY ATTORNEY
CITY OF PORT ORANGE
1000 City Center Circle
Port Orange, Florida 32129

March 3, 2025

To WHOM IT MAY CONCERN:

I, Shannon K. Balmer, am the Senior Assistant City Attorney for the *City of Port Orange,* Florida. I hereby state that I have examined copies of the following deeds that comprise Parcel No. 6303-10-01-0011:

Deed from Community Redevelopment Agency for Port Orange Town Center, a public body corporate and politic established pursuant to Section 163.356, Florida Statutes, dated December 27, 2021, and recorded in Official Records Book 8178, page 1893, Public Records of Volusia County, Florida to the *City of Port Orange, a Florida municipal corporation*, conveying Fee simple interest in the following property:

See Exhibit "A", Parcels 1 and 2, attached hereto and made a part hereof by reference.

Deed from John J. Gysbers and Marie P. Gysbers, dated October 24, 1990, 1993, and recorded in Official Records Book 3544, page 1588, Public Records of Volusia County, Florida to the *City of Port Orange, a Florida municipal corporation*, conveying Fee simple interest in the following property:

See Exhibit "A", Parcel 3, attached hereto and made a part hereof by reference

Deed from Andrew Russell Smith and William Dougherty Smith, dated August 4, 1992, and recorded in Official Records Book 3763, page 0499, Public Records of Volusia County, Florida to the *City of Port Orange, a Florida municipal corporation*, conveying Fee simple interest in the following property:

See Exhibit "A", Parcel 4, attached hereto and made a part hereof by reference.

Deed from Guy Thomas Peshek and Evelyn Lucy Peshek, dated November 3, 1965, and recorded in Official Records Book 748, page 264, Public Records of Volusia County, Florida to the *City of Port Orange, a Florida municipal corporation*, conveying Fee simple interest in the following property:

See Exhibit "A", Parcel 5, attached hereto and made a part hereof by reference.

Deed from Esther Gergely, dated September 30, 1993, and recorded in Official Records Book 3862, page 1947, Public Records of Volusia County, Florida to the *City of Port Orange, a Florida municipal corporation*, conveying Fee simple interest in the following property:

See Exhibit "A", Parcel 6, attached hereto and made a part hereof by reference.

Deed from Esther Gergely, dated September 30, 1993, and recorded in Official Records Book 3862, page 1948, Public Records of Volusia County, Florida to the *City of Port Orange, a Florida municipal corporation*, conveying Fee simple interest in the following property:

See Exhibit "A", Parcel 7, attached hereto and made a part hereof by reference.

I have also examined a document showing that this property is listed on the tax rolls as belonging to the ***City of Port Orange, a Florida municipal corporation.*** Finally, I have also examined such documents and records as necessary for this certification.

This property is what is now called "Riverwalk Day Dock Project Phase II".

I Certify that the ***City of Port Orange, a Florida municipal corporation*** does in fact own this property for approximately 32years as to Parcels 6 and 7, 60 years as to Parcel 5, 31 years as to Parcel 4, 35 years as to Parcel 3, and 4 years as to Parcels 1 and 2.

Very truly yours,

Shannon K. Balmer
Senior Assistant City Attorney for City of Port Orange

Form No. 25-35, Rule 66B-2 (Effective Date: xx-xx-xx)

CITY COUNCIL AGENDA ITEM

COUNCIL MEETING DATE 3/18/2025

SUBJECT: (D8) Resolution No. 25-17 - Approval of Florida Division of Emergency Management Subrecipient Agreement for Hurricane Milton

DEPARTMENT: Finance

GOAL: 2 - Infrastructure
5 - Fiscal Sustainability

RECOMMENDED MOTION: Move to approve Resolution No. 25-17.

SUMMARY: Hurricane Milton impacted the City of Port Orange on October 10, 2024 with winds and heavy rains, resulting in wind-borne debris and flooding. Staff have worked with the State of Florida and FEMA representatives to navigate the required public assistance programs. FEMA's Public Assistance program is a Federal grant to aid State and Local governments in returning a disaster area to pre-disaster conditions. The grant is provided to primarily address the repair and restoration of public facilities and infrastructure which have been damaged or destroyed or the restoration of services that were negatively impacted. Because Port Orange's Request for Public Assistance (RPA) was approved, it is now necessary to enter into the attached Agreement with the Florida Division of Emergency Management. Through FEMA's Public Assistance Grant Program, Port Orange is qualified for 75% to 100% reimbursement on eligible costs associated with Hurricane Milton. The City is requesting the full 100% reimbursement of approximately $5.56 million.

PRESENTER: Linda Truitt

ATTACHMENTS:

1.	Resolution No. 25-17	Resolution No. 25-17.pdf
2.	318 SR DR 4834 FL t-Z4628-Subrecipient Agreement	318 SR DR 4834 FL t-Z4628-Subrecipient Agreement.pdf

Linda Truitt	Created/Initiated - 2/17/2025
Linda Truitt	Approved - 2/17/2025
Linda Truitt	Approved - 2/17/2025
Matthew Jones	Approved - 2/25/2025
Wayne Clark	Final Approval - 3/7/2025

RESOLUTION NO. 25-17

A RESOLUTION OF THE CITY COUNCIL OF THE CITY OF PORT ORANGE, VOLUSIA COUNTY, FLORIDA; APPROVING THE SUBRECIPIENT AGREEMENT FROM THE FLORIDA DIVISION OF EMERGENCY MANAGEMENT (FDEM) FOR DR-4834 HURRICANE MILTON SUBRECIPIENT PROGRAM; AUTHORIZING THE MAYOR AND CITY CLERK TO EXECUTE THE AGREEMENT AND ATTACHMENTS; AUTHORIZING THE CITY MANAGER OR DESIGNEE THE AUTHORITY TO SUBMIT REIMBURSEMENT REQUEST FORMS PURSUANT TO THE AGREEMENT; PROVIDING FOR SCRIVENER'S ERRORS; AND PROVIDING AN EFFECTIVE DATE.

WHEREAS, the Florida Division of Emergency Management provides financial assistance to communities to respond to and recover from major disasters or emergencies and for limited mitigation measures; and

WHEREAS, the City Council of the City of Port Orange approves submitting reimbursements for eligible, necessary expenditures incurred due to Hurricane Milton; and

WHEREAS, the Florida Division of Emergency Management amount of total available funding for this subgrant (Z4628) is limited to the amount obligated by the Federal Awarding Agency for all projects approved for this Subrecipient for Hurricane Milton payments to Subrecipients are contingent upon the granting of budget authority to the Division by the United States Department of Homeland Security.

NOW, THEREFORE, BE IT RESOLVED BY THE CITY COUNCIL OF THE CITY OF PORT ORANGE, VOLUSIA COUNTY, FLORIDA:

Section 1. The City Council of the City of Port Orange hereby approves the

Subrecipient Agreement (Z4628) for funds from Florida Division of Emergency Management in an amount contingent upon the granting of budget authority to the Division by the United States Department of Homeland Security.

Section 2. The Mayor and City Clerk are authorized to execute the Agreement and any attachments thereto.

Section 3. The City Manager or designee are authorized to execute and submit Reimbursement Request Forms.

Section 4. Scrivener's Errors. Typographical errors and other matters of a similar nature that do not affect the intent of this Resolution, as determined by the City Clerk and City Attorney, may be corrected.

Section 5. This resolution shall become effective immediately upon adoption.

_____
MAYOR SCOTT STILTNER

ATTEST:

_____
Robin L. Fenwick, MMC, City Clerk

Adopted on the day of

Reviewed and Approved: _____
Shannon K. Balmer, Senior Assistant City Attorney

Agreement Number: Z4628

FEDERALLY FUNDED SUBAWARD AND GRANT AGREEMENT for- Hurricane Milton DR4834

The following Agreement is made and information is provided pursuant to 2 CFR §200.332(a)(1):

Subrecipient's name:	Port Orange, City Of
Subrecipient's unique entity identifier:	LV8ZD1LYF3H4
Federal Award Date:	12/10/2024
Subaward Period of Performance Start and End Date (Cat A-B):	10/05/2024 - 04/11/2025
Subaward Period of Performance Start and End Date (Cat C-G):	10/05/2024 - 04/11/2026
Amount of Federal Funds Obligated by this Agreement:	N/A
Total Amount of Federal Funds Obligated to the Subrecipient by the pass-through entity to include this Agreement:	
Total Amount of the Federal Award committed to the Subrecipient by the pass-through entity:	
Federal award project description (see Federal Funding Accountability and Transparency Act (FFATA):	Grant for communities to respond to and recover from major disasters or emergencies and for limited mitigation measures.
Name of Federal awarding agency:	Department of Homeland Security (DHS) Federal Emergency Management Agency (FEMA)
Name of pass-through entity:	Florida Division of Emergency Management (FDEM)
Contact information for the pass-through entity:	2555 Shumard Oak Blvd. Tallahassee, FL 32399-2100
Assistance Listing Number (Formerly CFDA Number):	97.036
Indirect cost rate for the Federal award:	See Section 9 (d)
Assistance Listing Program Title (Formerly CFDA program Title):	Disaster Grants - Public Assistance (Presidentially Declared Disasters)

THIS AGREEMENT is entered into by the State of Florida, Division of Emergency Management, with headquarters in Tallahassee, Florida (hereinafter referred to as the "Agency" or “FDEM”), and Port Orange, City Of (hereinafter referred to as the "Subrecipient").

THIS AGREEMENT IS ENTERED INTO BASED ON THE FOLLOWING REPRESENTATIONS:

A. The Subrecipient represents that it is fully qualified and eligible to receive these grant funds to provide the services identified herein;

B. The Subrecipient, by its decision to participate in this grant program, bears the ultimate responsibility for ensuring compliance with all applicable State and Federal laws, regulations and policies, and bears the ultimate consequences of any adverse decisions rendered by FDEM, the Federal Awarding Agency, or any other State and

Federal agencies with audit, regulatory, or enforcement authority;

C. This Agreement establishes the relationship between the Agency and the Subrecipient to allow the Agency to pay grant funds to the Subrecipient.

THEREFORE, the Agency and the Subrecipient agree to the following:

(1) APPLICATION OF STATE LAW TO THIS AGREEMENT

2 CFR § 200.302 provides: "Each state must expend and account for the Federal award in accordance with state laws and procedures for expending and accounting for the state's own funds." Therefore, section 215.971, Florida Statutes, entitled "Agreements funded with federal or state assistance," applies to this Agreement.

(2) LAWS, RULES, REGULATIONS AND POLICIES

a. Performance under this Agreement is subject to 2 CFR Part 200, entitled "Uniform Administrative Requirements, Cost Principles, and Audit Requirements for Federal Awards."

b. In addition to the foregoing, the Subrecipient and the Agency shall be governed by all applicable State and Federal laws, rules, and regulations. Any express reference in this Agreement to a particular statute, rule, or regulation in no way implies that no other statute, rule, or regulation applies.

c. The applicable statutes, rules, or regulations are the statutes, rules, or regulations in effect at the time of the declaration of the incident through which federal funds are awarded, or as otherwise indicated as retroactively applied. All required provisions can be found in Attachment D: Required Contract Provisions.

(3) CONTACT

a. In accordance with section 215.971(2), Florida Statutes, the Agency's Grant Manager shall be responsible for enforcing performance of this Agreement's terms and conditions and shall serve as the Agency's liaison with the Subrecipient. As part of his/her duties, the Grant Manager for the Agency shall:

i. Monitor and document Subrecipient performance; and

ii. Review and document all deliverables for which the Subrecipient requests payment.

b. The Agency's Grant Manager for this Agreement is:

Name and Title: Stephane Malet, Grant Program Manager
Bureau of: Recovery
Address: Florida Division of Emergency Management
2555 Shumard Oak Blvd.
Tallahassee, FL 32399-2100
Telephone: (850) 815-4469
Email: Stephane.Malet@em.myflorida.com

c. The name and address of the Representative of the Subrecipient responsible for the administration of this Agreement is:

Name: Linda Truitt
Address: 1000 City Center Circle Port Orange FL 32129

Telephone: 386-506-5743
Email: ltruitt@port-orange.org

In the event that different representatives or addresses are designated by either party after execution of this Agreement, notice of the name, title, and address of the new representative will be provided to the other party in writing via letter or electronic email.

d. Systems Access: It is the Subrecipient's responsibility to maintain current active users in the Agency's grants management system in accordance with Attachment B to this Agreement ("Systems Access Form").

(4) TERMS AND CONDITIONS

This Agreement contains all the terms and conditions agreed upon by the parties.

(5) EXECUTION

This Agreement may be executed in any number of counterparts, of which may be taken as an original.

(6) MODIFICATION

Either party may request modification of the provisions of this Agreement. Changes which are agreed upon shall be valid only when in writing, signed by each of the parties, and attached to the original of this Agreement.

(7) SCOPE OF WORK

The Subrecipient shall perform the work as approved by FEMA and provide the necessary documentation to substantiate work completed.

(8) PERIOD OF AGREEMENT/PERIOD OF PERFORMANCE

The Period of Agreement establishes a timeframe for all Subrecipient contractual obligations to be completed. Upon execution by both parties, this Agreement shall begin on the first day of the incident period for the disaster applicable to the agreement and shall end upon closeout of the Subrecipient's account for this disaster by the Federal Awarding Agency, unless terminated earlier as specified elsewhere in this Agreement. This Agreement survives and remains in effect after termination for the herein referenced State and Federal audit requirements and the referenced required records retention periods. Work may only be performed during the timeframes established and approved by FEMA for each Category of Work type.

(9) FUNDING

a. The amount of total available funding for this subgrant is limited to the amount obligated by the Federal Awarding Agency for all projects approved for this Subrecipient for DR - 4834 - Hurricane Milton . Payments to Subrecipients are contingent upon the granting of budget authority to the Agency.

b. Pursuant to section 252.37(5)(a), Florida Statutes, unless otherwise specified in the General Appropriations Act, whenever the State accepts financial assistance from the Federal Government or its agencies under the Federal Public Assistance Program and such financial assistance is conditioned upon a requirement for matching funds, the State shall provide the entire match requirement for state agencies and one-half of the required match for grants to Local governments. **Affected Local governments shall be required to provide one-half of the required match prior to receipt of such financial assistance. Section 252.37, Florida Statutes, does not apply to Subrecipients that are considered Private Non-Profit entities, therefore the entire non-federal share shall be the responsibility of the Private Non-Profit Subrecipient.**

c. The Executive Office of the Governor may approve a waiver to local governments for the Non-Federal

match requirement. The local government must apply for the waiver in accordance with Section 252.37(5)(b), Florida Statutes. Local governments must apply for the match waiver independently from their respective County.

d. Under the Federal Emergency Management Agency's Public Assistance Program, subrecipients may seek reimbursement for indirect costs. 44 C.F.R. § 207.2, defines indirect costs as, "costs that are incurred by a grantee for a common or joint purpose benefiting more than one cost objective that are not readily assignable to the cost objectives specifically benefited". Additionally, "indirect costs may not be charged directly to a project or reimbursed separately, but rather are considered to be eligible management costs under this part" (see 44 C.F.R. § 207.6). Any organization that receives Federal awards and requests recovery of indirect costs must have an approved federally recognized indirect cost rate agreement (see 2 C.F.R. § 200.400 – 200.476 and Appendix IV to Part 200). The indirect cost rate shall be negotiated between the subrecipient and the Federal government. If no approved rate exists the Agency shall determine the appropriate rate in collaboration with the subrecipient, which is either the negotiated rate between the Agency and the subrecipient or the *de minimus* indirect cost rate.

(10) PAYMENT

a. The payment method used by the Agency is either a Cost Reimbursement or an Advance Payment. Advance payments will be governed by Chapter 216, Florida Statutes.

b. The Agency's Grant Manager, as required by section 215.971(2)(c), Florida Statutes, shall reconcile and verify all funds received against all funds expended during the grant agreement period and produce a final reconciliation report. The final report must identify any funds paid in excess of the expenditures incurred by the Subrecipient.

c. As required by 2 CFR 200.305 (b.) (8) and (9), The non-Federal entity must maintain advance payments of Federal awards in interest bearing accounts.

(11) FLORIDA RECOVERY OBLIGATION CALCULATION (F-ROC)

If you are opted into the Florida Recovery Obligation Calculation (F-ROC) Program and received an F-ROC score for this event, you will receive payment for all large, non-expedited, Category A and Category B projects, equal to your score as a percentage upon obligation. Funding will remain contingent upon obligation by FEMA and the Applicant will be liable for repayment (See (12) REPAYMENTS) upon de-obligation by FEMA of any disbursed funds. Any de-obligation of funding is within FEMA's sole discretion and the Agency shall not be liable for FEMA's exercise of its discretion. Participation in the F-ROC program does not guarantee funding and is dependent upon FEMA's obligation. As stated in the executed F-ROC Participation Request Form:

a. The score is made up of three components:
   i. 20% Baseline score for signing and returning the Request Form.
   ii. Up to a 40% score for completing the DRA.
   iii. Up to a 20% score for completing the PDQ.

b. Applicants who have received EMAP accreditation will receive an additional 5%.

c. The Applicant's score directly corresponds to the percent of the eligible obligated amount that will be disbursed to the Applicant upon obligation of the Public Assistance project. After validation of all supporting documentation is complete, the Applicant will receive the remainder of the validated, obligated amount.

d. If the Applicant has any open receivables with the Division, those receivables must be satisfied before any disbursements are made through the F-ROC program.

e. The Applicant may choose to receive a lesser score than the score earned through the completion of the above components on a one-time basis per disaster. The Applicant must make a request to that effect in writing to the Agency, on their letter head and duly signed by an authorized representative of the Applicant. Such a request must be made prior to the obligation of funds for it to impact the Applicant's score and therefore, reflect upon the obligation attaching thereto.

(12) REPAYMENTS

a. Refunds or repayments of obligated funds may be paid to the Agency through check or through a payment plan as approved by the Department of Financial Services. Additionally, FEMA may permit the Agency to off-set against other obligated projects where deemed appropriate. The Subrecipient has 45 days to repay the funds from the issuance of the invoice from the Agency. The Agency may impose a 1% per month interest fee for unpaid invoices.

b. All refunds or repayments due to FDEM under this Agreement are to be made payable to the order of "Florida Division of Emergency Management," and must include the invoice number and the applicable Disaster and Project number(s) that are the subject of the invoice, and be mailed directly to the following address:

Florida Division of Emergency Management
Cashier
2555 Shumard Oak Boulevard
Tallahassee FL 32399-2100

(13) RECORDS

a. As required by 2 CFR § 200.334, and modified by Florida Department of State's record retention requirements (Fla. Admin. Code R. 1B-24.003), the Subrecipient shall retain sufficient records to show its compliance with the terms of this Agreement and all relevant terms and conditions of the award paid from funds under this Agreement, for a period of five (5) years from the date of submission of the final expenditure report. This period may be extended for reasons including, but not limited to, litigation, fraud, or appeal. As required by 2 CFR § 200.303(e), the Subrecipient shall take reasonable measures to safeguard protected personally identifiable information and other information the Federal Awarding Agency or FDEM designates as sensitive or the Subrecipient considers sensitive consistent with applicable Federal, State, local, and tribal laws regarding privacy and responsibility over confidentiality.

b. The Subrecipient shall maintain all records for the Subrecipient and for all subcontractors or consultants to be paid from funds provided under this Agreement, including documentation of all program costs, in a form sufficient to determine compliance with the requirements and objectives of the award and all other applicable laws and regulations.

c. The Federal Funding Accountability and Transparency Act (FFATA) was signed on September 26, 2006. The intent if this legislation is to empower every American with the ability to hold the government accountable for each spending decision. The FFATA Subaward Reporting System (FSRS) is the reporting tool the Agency must use to capture and report sub-award and executive compensation data regarding first-tier subawards that obligate $30,000 or more in Federal funds (excluding Recovery funds as defined in section 1512(a)(2) of the American Recovery and Reinvestment Act of 2009, Pub. L. 111-5).

(14) AUDITS

a. The Subrecipient shall comply with the audit requirements contained in 2 CFR Part 200, Subpart F.

b. As required by 2 CFR § 200.337(a), "The Federal awarding agency, Inspectors General, the Comptroller General of the United States, and the [Agency], or any of their authorized representatives, shall enjoy the right of access to any documents, papers, or other records of the [Subrecipient] which are pertinent to the Federal award, in order to make audits, examinations, excerpts, and transcripts. The right also includes timely and reasonable access to the [Subrecipient's] personnel for the purpose of interview and discussion related to such documents." The right of access is not limited to the required retention period but lasts as long as the records are retained (2 CFR § 200.337(c)).

c. As required by 2 CFR § 200.332(a)(5), the Agency, the Chief Inspector General of the State of Florida, the Florida Auditor General, or any of their authorized representatives, shall enjoy the right of access to any documents, financial statements, papers, or other records of the Subrecipient which are pertinent to this Agreement, in order to make audits, examinations, excerpts, and transcripts. The right of access also includes timely and reasonable access to the Subrecipient's personnel for the purpose of interview and discussion related to such documents.

d. Each public assistance subrecipient must submit a certification in FloridaPA.org to inform FDEM whether their entity is subject to a Federal Single Audit. This is part of the Recovery Bureau's overall monitoring program.

e. The subrecipient agrees to submit the Federal Single Audit report to the Agency in FloridaPA.org no later than 30 calendar days after receipt of the auditor's report.

f. Per (2 CFR §200.512(d), the subrecipient's auditor must electronically submit the single audit report to the Federal Audit Clearinghouse (FAC) at fac.gov.

(15) REPORTS

a. Consistent with 2 CFR § 200.329, the Subrecipient shall provide the Agency with quarterly reports and any applicable financial reporting, including reports required by the Federal Funding Accountability and Transparency Act (FFATA). These reports shall include the current status and progress by the Subrecipient and, as applicable, all subcontractors in completing the work described in the Scope of Work and the expenditure of funds under this Agreement, in addition to any other information requested by the Agency.

	Reporting Time Period	Subrecipient Report Submittal Deadline
Quarter 1 (Q1)	October 1 – December 31	January 15
Quarter 2 (Q2)	January 1 – March 31	April 15
Quarter 3 (Q3)	April 1 – June 30	July 15
Quarter 4 (Q4)	July 1 – September 30	October 15

b. The Subrecipient agrees to submit quarterly reports to the Agency no later than fifteen (15) days after the end of each quarter of the program year and to submit quarterly reports each quarter until one quarter past the

closeout of each project in the Agency's Grant Management System. The ending dates for each quarter of the program year are March 31, June 30, September 30, and December 31.

c. The closeout report is due sixty (60) days after completion of each project worksheet associated with the applicant executing this Agreement, or sixty (60) days after termination of this Agreement, whichever first occurs.

d. The Subrecipient shall provide additional program reports, updates, or information that may be required by FDEM or the Federal awarding agency.

(16) MONITORING

a. The Agency shall monitor the performance of the Subrecipient under this Agreement to ensure that the Scope of Work is being accomplished within the specified time periods, and that other performance goals are being met.

b. The Subrecipient agrees to comply and cooperate with any monitoring procedures/processes deemed appropriate by the Agency. In the event that the Agency determines that an audit of the Subrecipient is appropriate, the Subrecipient agrees to comply with any additional instructions provided by the Agency to the Subrecipient regarding such audit.

c. Small Projects, as defined in 44 CFR § 206.203(c)(2), that are obligated above the Federal Simplified Acquisition Threshold (SAT) will be subject to enhanced oversight and monitoring by the Agency as authorized by 2 CFR § 200.332(a)(2).

(17) LIABILITY

a. Unless the Subrecipient is a State agency or political subdivision, as defined in section 768.28(2), Florida Statutes, the Subrecipient is solely responsible to third parties it deals with in carrying out the terms of this Agreement. As authorized by section 768.28(19), Florida Statutes, Subrecipient shall hold the Agency harmless against all claims of whatever nature by third parties arising from the work performance under this Agreement. For purposes of this Agreement, Subrecipient agrees that it is not an employee or agent of the Agency but is an independent contractor.

b. As required by section 768.28(19), Florida Statutes, any Subrecipient which is a State agency or political subdivision, as defined in section 768.28(2), Florida Statutes, agrees to be fully responsible for its negligent or tortious acts or omissions which result in claims or suits against the Agency and agrees to be liable for any damages proximately caused by the acts or omissions to the extent set forth in section 768.28, Florida Statutes. Nothing herein is intended to serve as a waiver of sovereign immunity by any Subrecipient to which sovereign immunity applies. Nothing herein shall be construed as consent by a State agency or subdivision of the State of Florida to be sued by third parties in any matter arising out of any contract.

(18) TERMINATION

This Agreement terminates upon the completion of all eligible work and payment of all eligible costs in accordance with the Public Assistance Program requirements. The Agency and Subrecipient agree that all records will be maintained until the conclusion of any record retention period.

(19) PROCUREMENT

a. The Subrecipient must ensure that any procurement involving funds authorized by the Agreement complies with all applicable Federal and State laws and regulations, including 2 CFR § 200.318 through 200.327 as well as Appendix II to 2 CFR Part 200 (entitled "Contract Provisions for Non-Federal Entity Contracts Under Federal

Awards"). Additional requirements, guidance, templates, and checklists regarding procurement may be obtained through the FEMA Procurement Disaster Assistance Team. Resources found here: https://www.fema.gov/grants/procurement.

b. The Subrecipient must include all applicable federal contract terms for all contracts for which federal funds are received.

If the Subrecipient contracts with any contractor or vendor for performance of any portion of the work required under this Agreement, the Subrecipient must incorporate into its contract with such contractor or vendor an indemnification clause holding the Federal Government, its employees and/or their contractors, the Agency, its employees and/or their contractors, and the Subrecipient and its employees and/or their contractors harmless from liability to third parties for claims asserted under such contract.

c. The Subrecipient must monitor and document, in the quarterly report, the contractor's progress in performing work on its behalf under this Agreement in addition to its own progress.

d. The Subrecipient must ensure all contracts conform to sections 287.057 and 288.703, Florida Statutes, as applicable.

e. 1. Pursuant to section 287.05805, Florida Statutes, if state funds are being used for the purchase of or improvements to real property pursuant to the terms of this Agreement, the state funds are contingent upon the Subrecipient or political subdivision granting to the state a security interest in the property at least to the amount of state funds provided for at least five (5) years from the date of purchase or the completion of the improvements or as further required by law.

f. 2. If applicable, pursuant to section 255.0993, Florida Statutes, the Subrecipient shall ensure that any iron or steel product, as defined in section 255.0993(1)(b), Florida Statutes, that is permanently incorporated in the deliverable(s) resulting from this project, is produced in the United States.

(20) ATTACHMENTS

a. All attachments to this Agreement are incorporated as if set out fully.

b. In the event of any inconsistencies or conflict between the language of this Agreement and the attachments, the language of the attachments shall control, but only to the extent of the conflict or inconsistency.

c. This Agreement has the following attachments:

i. Attachment A – Scope of Work, Deliverables, and Financial Consequences
ii. Attachment B – Systems Access Form
iii. Attachment C – Certification Regarding Debarment
iv. Attachment D – Required Contract Provisions
v. Attachment E – Certification Regarding Lobbying
vi. Attachment F – Foreign Country of Concern Affidavit

IN WITNESS WHEREOF, the parties hereto have executed this Agreement.

SUBRECIPIENT: Port Orange, City Of

By: _____
(Signature)

Name: Scott Stiltner

Title: Mayor

Date: _____

Attest: _____
Robin L. Fenwick, MMC, City Clerk

STATE OF FLORIDA
DIVISION OF EMERGENCY MANAGEMENT

By: _____
Alternate Governor's Authorized Representative

Date: _____

Attachment A

SCOPE OF WORK, DELIVERABLES and FINANCIAL CONSEQUENCES

Scope of Work

FEMA has sole authority for determining eligibility of project activities and associated costs. The Subrecipient is required to complete all eligible Projects and submit appropriate supporting documentation for all work and costs, as approved by FEMA.

When FEMA has obligated funding for a Subrecipient's Project Worksheet (PW), the Agency notifies the Subrecipient with a copy of the PW (or P2 Report).

Budget and Project List

For the purpose of this Agreement, each Project will be monitored, completed, and reimbursed independently of the other Projects which are made part of this Agreement.

Deliverables

For the purposes of this agreement, each project will be a standalone deliverable but may be compensated incrementally based on the Subrecipient's expenditures. The required performance level is satisfactory completion of the project as identified in the Scope of Work, the approved PW, and subsequent PW versions, if applicable.

Project will be paid upon obligation and validation of the Project Worksheet and execution of the subgrant agreement. Subrecipient must initiate the Small Project Closeout in the grants management system within sixty (60) days of completion of the project work, or no later than the period of performance end date. Small Project Closeout is initiated by logging into the grants management system, selecting the Subrecipient's account, then selecting 'Create New Request', and selecting 'New Small Project Completion/Closeout'. Complete the form and 'Save'. The final action is to advance the form to the next queue for review.

Financial Consequences:

2 CFR §200.339 and §215.971, Florida Statutes, requires the Agency, as the recipient of Federal funding, to apply financial consequences, including withholding a portion of funding up to the full amount in the event that the Subrecipient fails to be in compliance with Federal, State, and Local requirements, or satisfactorily perform required activities/tasks.

For any PW that the Subrecipient fails to complete in compliance with Federal, State and Local requirements, the Agency shall withhold a portion of the funding up to the full amount until such compliance is either ultimately obtained or the project is de-obligated by FEMA and/or withdrawn.

The Agency shall apply the following financial consequences in these specifically identified events:

Work performed outside the Incident Period
Based on 2 C.F.R. §200.309, a Subrecipient may be reimbursed only for eligible costs incurred for work performed within the period of performance. Costs incurred as a result of work performed outside of the period of performance will be deemed not allowable and ineligible for reimbursement by the Agency as a financial consequence. In accordance with 44 CFR 206.204 (d), if the Subrecipient does not anticipate finishing the work within the original period of performance, they must request a time extension and support that the work cannot be timely completed due to extenuating circumstances beyond the Subrecipient's control.

Additionally, if the project is not completed within the period of performance and a time extension request was not granted, the Agency will coordinate with the Federal Awarding Agency to adjust the costs obligated amount to reflect the actual allowable costs incurred during the period of performance as a financial consequence.

The Agency retains the right to impose financial consequences for instances of non-performance or non-compliance not specifically addressed in this section.

Attachment B

SYSTEMS ACCESS

The **System Access Form** is submitted with each new disaster or emergency declaration to identify the Subrecipient's contacts for the FDEM Grants Management System in order to enter notes, review notes and documents, and submit the documentation necessary to work the new event. The Systems Access Form is originally submitted as Attachment "B" to the PA Funding Agreement. The Subrecipient is responsible for regularly reviewing its contacts. Contacts should be removed within 14 days of separation, retirement, or are reassignment by the Subrecipient. A new form will only be needed if all listed contacts have separated from the Agency. If a new Systems Access form is submitted, all Agency Representatives currently listed as contacts that are not included on the updated form will be deleted from FDEM Grants Management System for the specified grant. All users must log in on a monthly basis to keep their accounts from becoming locked. **Note: the Systems Access Form is NOT a delegation of authority. A signatory must have an attached delegation of authority as appropriate.**

Instructions for Completion

Complete the form in its entirety, listing the name and information for all representatives who will be working in the FDEM Grant Management System. Users will be notified via email when they have been granted access. The user must log in to the FDEM Grants Management System within twelve (12) hours of being notified or their account will lock them out. Each user must log in within a sixty (60) day period or their account will lock them out. In the event you try to log in and your account is locked, users must submit a request for unlocking to RPA.Help@em.myflorida.com.

The form is divided into twelve blocks; each block must be completed where appropriate.

Block 1: "Authorized Agent" – This should be the highest authority in your organization who is authorized to sign legal documents on behalf of your organization. A subsequent new Authorized Agent must be designated through a letter on letterhead from the Subrecipient's Authorized Representative. It is recommended to delegate this authority to an organizational staff member to avoid delays in grant management (Only one Authorized Agent is allowed, and this person will have full access/authority unless otherwise requested).

Block 2: "Primary Contact" – This is the person designated by your organization to receive all correspondence and is our main point of contact. This contact will be responsible for answering questions, uploading documents, and submitting reports/requests in FDEM Grants Management System. The Authorized Agent may designate a new Primary Contact. (Only one Primary Contact is allowed, and this contact will have full access).

Block 3: "Alternate Contact" – This is the person designated by your organization to be available when the Primary is not. Either the Authorized Agent or Primary Contact may designate a new Alternate Contact. (Only one Alternate Contact is allowed, and this contact will have full access).

Block 4, 5, and 6: "Other" (Finance/Point of Contact, Risk Management-Insurance, and Environmental-Historic). Providing these contacts is essential in the coordination and communication required between State and Local subject matter experts. We understand that the same agent may be identified in multiple blocks, however we ask that you enter the name and information again to ensure we are communicating with the correct individuals.

Block 7 – 12: "Other" (Read Only Access) – There is no limit on "Other" contacts, but we ask that this be restricted to those that are going to actually need to log in and have a role in reviewing the information. This designation is only for situational awareness purposes as individuals with the "Other Read-Only" designation cannot take any action in FDEM Grants Management System.

Note: The Systems Access Form is NOT a delegation of authority. A signatory must have an attached delegation of authority as appropriate.

SYSTEMS ACCESS FORM (CONTACTS)
FEMA/GRANTEE PUBLIC ASSISTANCE PROGRAM
FLORIDA DIVISION OF EMERGENCY MANAGEMENT

Subrecipient: Port Orange, City Of

Box 1: Authorized Agent (Full Access)	**Box 2: Primary Contact** (Full Access)
Name: Scott Stiltner	Name: Linda Truitt
Signature:	Signature:
Organization / Official Position: Mayor	Organization / Official Position: Interim Finance Director
Mailing Address: 1000 City Center Cirlce	Mailing Address: 1000 City Center Circle
City, State, Zip: Port Orange, FL 32129	City, State, Zip: Port Orange, FL 32129
Daytime Telephone: 386-506-5502	Daytime Telephone: 386-506-5743
E-mail Address: mayor@port-orange.org	E-mail Address: ltruitt@port-orange.org
Box 3: Alternate Contact (Full Access)	**Box 4: Other-Finance/Point of Contact** (Full Access)
Name: Deanie Smith	Name: Amber Hlister
Signature:	Signature:
Organization / Official Position: Budget Manager	Organization / Official Position: Accounting Supervisor
Mailing Address: 1000 City Center Cirlce	Mailing Address: 1000 City Center Circle
City, State, Zip: Port Orange, FL 32129	City, State, Zip: Port Orange, FL 32129
Daytime Telephone: 386-506-5713	Daytime Telephone: 386-506-5714
E-mail Address: dsmith@port-orange.org	E-mail Address: ahlister@port-orange.org
Box 5: Other-Risk Mgmt-Insurance (Full Access)	**Box 6: Other-Environmental-Historic** (Full Access)
Name:	Name:
Signature:	Signature:
Organization / Official Position:	Organization / Official Position:
Mailing Address:	Mailing Address:
City, State, Zip:	City, State, Zip:
Daytime Telephone:	Daytime Telephone:
E-mail Address:	E-mail Address:

The above contacts may utilize the FDEM Grants Management System to perform the Subrecipient's responsibilities regarding the Public Assistance Grant according to their level of access. The Subrecipient is responsible for ensuring that all contacts are correct and up-to-date.

_____

Subrecipient Authorized Representative Signature

_____

Date

SYSTEMS ACCESS FORM (CONTACTS)
FEMA/GRANTEE PUBLIC ASSISTANCE PROGRAM
FLORIDA DIVISION OF EMERGENCY MANAGEMENT

Subrecipient: Port Orange, City Of **Date:**

Box 7: **Other** (Read Only Access)	**Box 8:** **Other** (Read Only Access)
Name	Name
Signature	Signature
Organization / Official Position	Organization / Official Position
Mailing Address	Mailing Address
City, State, Zip	City, State, Zip
Daytime Telephone	Daytime Telephone
E-mail Address	E-mail Address
Box 9: **Other** (Read Only Access)	**Box 10:** **Other** (Read Only Access)
Name	Name
Signature	Signature
Organization / Official Position	Organization / Official Position
Mailing Address	Mailing Address
City, State, Zip	City, State, Zip
Daytime Telephone	Daytime Telephone
E-mail Address	E-mail Address
Box 11: **Other** (Read Only Access)	**Box 12:** **Other** (Read Only Access)
Name	Name
Signature	Signature
Organization / Official Position	Organization / Official Position
Mailing Address	Mailing Address
City, State, Zip	City, State, Zip
Daytime Telephone	Daytime Telephone
E-mail Address	E-mail Address

Subrecipient's Fiscal Year (FY) Start: **Month:** Oct **Day:** 1

Subrecipient's Federal Employer's Identification Number (EIN) 59-6000412

Subrecipient's Grantee Cognizant Agency for Single Audit Purposes: Florida Division of Emergency Management

Subrecipient's: FIPS Number (If Known) 127-58575-00

Attachment C

CERTIFICATION REGARDING DEBARMENT, SUSPENSION, INELIGIBILITY and VOLUNTARY EXCLUSION

The Subrecipient certifies, to the best of its knowledge and belief, that it and its principals:

1. Are not presently debarred, suspended, proposed for debarment, declared ineligible, or voluntarily excluded from covered transactions by any Federal department or agency;

2. Have not within the five-year period preceding entering into this Agreement had one or more public transactions (Federal, State, or Local) terminated for cause or default; and

3. Have not within the five-year period preceding entering into this proposal been convicted of or had a civil judgment rendered against them for:

a) the commission of fraud or a criminal offense in connection with obtaining, attempting to obtain, or performing a public (Federal, State, or Local) transaction or a contract under public transaction, or b) violation of Federal or State antitrust statutes or commission of embezzlement, theft, forgery, bribery, falsification, or destruction of records, making false statements, or receiving stolen property.

The Subrecipient understands and agrees that the language of this certification must be included in the award documents for all subawards at all tiers (including subcontracts, subgrants, contracts under grants, loans, and cooperative agreements) and that all contractors and sub-contractors must certify and disclose accordingly.

The Subrecipient further understands and agrees that this certification is a material representation of fact upon which reliance was placed when this transaction was made or entered into.

By: _____
Signature

Scott Stiltner, Mayor
Name and Title

1000 City Center Circle
Street Address

Port Orange, FL, 32129
City, State, Zip

_____
Date

Port Orange, City Of
Subrecipient's Name

Z4628
FDEM Contract Number

Required Contract Provisions

1. Remedies

Contracts for more than the federal simplified acquisition threshold (SAT), the dollar amount below which an NFE may purchase property or services using small purchase methods, currently set at $250,000 for procurements made on or after June 20, 2018,[4] must address administrative, contractual, or legal remedies in instances where contractors violate or breach contract terms, and must provide for sanctions and penalties as appropriate.[5]

1.1 Applicability

This contract provision is required for contracts over the SAT, currently set at $250,000 for procurements made on or after June 20, 2018. Although not required for contracts at or below the SAT, FEMA suggests including a remedies provision.

1.2 Additional Considerations

For FEMA's Assistance to Firefighters Grant (AFG) Program, recipients must include a penalty clause in all contracts for any AFG-funded vehicle, regardless of dollar amount. In that situation, the contract must include a clause addressing that non-delivery by the contract's specified date or other vendor nonperformance will require a penalty of no less than $100 per day until such time that the vehicle, compliant with the terms of the contract, has been accepted by the recipient. This penalty clause should, however, account for *force majeure* or acts of god. AFG recipients should refer to the applicable year's Notice of Funding Opportunity (NOFO) for additional information, which can be accessed at FEMA.gov.

2. Termination for Cause and Convenience

Contracts for more than $10,000 must address termination for cause and for convenience by the non-federal entity, including how it will be carried out and the basis for settlement.[6]

2.1 Applicability

This contract provision is required for procurements exceeding $10,000. FEMA suggests including a termination for cause and for convenience in all contracts even when not required.

[4] *See* FEMA Grant Programs Directorate Information Bulletin No. 434, Increases and Changes to the Micro-Purchase and Simplified Acquisition Thresholds (Aug. 28, 2018), https://www.fema.gov/sites/default/files/2020-08/ib_434_changes_micro_purch_simp_acquisition_thresholds.pdf. For procurements subject to 2 C.F.R. Part 200 that were made before June 20, 2018, the SAT was $150,000.
[5] 2 C.F.R. Part 200, Appendix II, § A.
[6] *See* 2 C.F.R. Part 200, Appendix II, § B.

3. Equal Employment Opportunity

Any contract that uses federal funds to pay for construction work is a "federally assisted construction contract" and must include the equal opportunity clause found in 2 C.F.R. Part 200, unless otherwise stated in 41 C.F.R. Part 60.[7]

3.1 Applicability

This contract provision is required for all procurements that meet the definition of a "federally assisted construction contract."

3.2 Key Definitions

- *Federally Assisted Construction Contract:* The regulation at 41 C.F.R. § 60-1.3 defines a *federally assisted construction contract* as "any agreement or modification thereof between any applicant and a person for construction work which is paid for in whole or in part with funds obtained from the Government or borrowed on the credit of the Government pursuant to any federal program involving a grant, contract, loan, insurance or guarantee, or undertaken pursuant to any federal program involving such grant, contract, loan, insurance, or guarantee, or any application or modification thereof approved by the Government for a grant, contract, loan, insurance, or guarantee under which the applicant itself participates in the construction work."

- *Construction Work:* The regulation at 41 C.F.R. § 60-1.3 defines *construction work* as "the construction, rehabilitation, alteration, conversion, extension, demolition or repair of buildings, highways, or other changes or improvements to real property, including facilities providing utility services. The term also includes the supervision, inspection, and other onsite functions incidental to the actual construction."

- *Contract:* The regulation at 41 C.F.R. § 60-1.3 defines *contract* as "any Government contract or subcontract or any federally assisted construction contract or subcontract."

- Additional definitions pertaining to this contract provision can be found at 41 C.F.R. § 60-1.3.

3.3 Required Language

The regulation at 41 C.F.R. § 60-1.4(b) requires, except as otherwise provided or exempted in 41 C.F.R. Part 60, the insertion of the following contract clause: "During the performance of this contract, the contractor agrees as follows:

> (1) The contractor will not discriminate against any employee or applicant for employment because of race, color, religion, sex, sexual orientation, gender identity, or national origin. The contractor will take affirmative action to ensure that applicants are employed, and that employees are treated during employment without regard to their race, color, religion, sex, sexual

[7] *See* 2 C.F.R. Part 200, Appendix II, § C.

orientation, gender identity, or national origin. Such action shall include, but not be limited to the following:

Employment, upgrading, demotion, or transfer; recruitment or recruitment advertising; layoff or termination; rates of pay or other forms of compensation; and selection for training, including apprenticeship. The contractor agrees to post in conspicuous places, available to employees and applicants for employment, notices to be provided setting forth the provisions of this nondiscrimination clause.

(2) The contractor will, in all solicitations or advertisements for employees placed by or on behalf of the contractor, state that all qualified applicants will receive consideration for employment without regard to race, color, religion, sex, sexual orientation, gender identity, or national origin.

(3) The contractor will not discharge or in any other manner discriminate against any employee or applicant for employment because such employee or applicant has inquired about, discussed, or disclosed the compensation of the employee or applicant or another employee or applicant. This provision shall not apply to instances in which an employee who has access to the compensation information of other employees or applicants as a part of such employee's essential job functions discloses the compensation of such other employees or applicants to individuals who do not otherwise have access to such information, unless such disclosure is in response to a formal complaint or charge, in furtherance of an investigation, proceeding, hearing, or action, including an investigation conducted by the employer, or is consistent with the contractor's legal duty to furnish information.

(4) The contractor will send to each labor union or representative of workers with which he has a collective bargaining agreement or other contract or understanding, a notice to be provided advising the said labor union or workers' representatives of the contractor's commitments under this section, and shall post copies of the notice in conspicuous places available to employees and applicants for employment.

(5) The contractor will comply with all provisions of Executive Order 11246 of September 24, 1965, and of the rules, regulations, and relevant orders of the Secretary of Labor.

(6) The contractor will furnish all information and reports required by Executive Order 11246 of September 24, 1965, and by rules, regulations, and orders of the Secretary of Labor, or pursuant thereto, and will permit access to his books, records, and accounts by the administering agency and the Secretary of Labor for purposes of investigation to ascertain compliance with such rules, regulations, and orders.

(7) In the event of the contractor's noncompliance with the nondiscrimination clauses of this contract or with any of the said rules, regulations, or orders, this contract may be canceled, terminated, or suspended in whole or in part and the contractor may be declared ineligible for further Government contracts or federally assisted construction contracts in accordance with procedures authorized in Executive Order 11246 of September 24, 1965, and such other

sanctions may be imposed and remedies invoked as provided in Executive Order 11246 of September 24, 1965, or by rule, regulation, or order of the Secretary of Labor, or as otherwise provided by law.

(8) The contractor will include the portion of the sentence immediately preceding paragraph (1) and the provisions of paragraphs (1) through (8) in every subcontract or purchase order unless exempted by rules, regulations, or orders of the Secretary of Labor issued pursuant to section 204 of Executive Order 11246 of September 24, 1965, so that such provisions will be binding upon each subcontractor or vendor. The contractor will take such action with respect to any subcontract or purchase order as the administering agency may direct as a means of enforcing such provisions, including sanctions for noncompliance:

Provided, however, that in the event a contractor becomes involved in, or is threatened with, litigation with a subcontractor or vendor as a result of such direction by the administering agency, the contractor may request the United States to enter into such litigation to protect the interests of the United States.

The applicant further agrees that it will be bound by the above equal opportunity clause with respect to its own employment practices when it participates in federally assisted construction work: *Provided,* that if the applicant so participating is a state or local government, the above equal opportunity clause is not applicable to any agency, instrumentality or subdivision of such government which does not participate in work on or under the contract.

The applicant agrees that it will assist and cooperate actively with the administering agency and the Secretary of Labor in obtaining the compliance of contractors and subcontractors with the equal opportunity clause and the rules, regulations, and relevant orders of the Secretary of Labor, that it will furnish the administering agency and the Secretary of Labor such information as they may require for the supervision of such compliance, and that it will otherwise assist the administering agency in the discharge of the agency's primary responsibility for securing compliance.

The applicant further agrees that it will refrain from entering into any contract or contract modification subject to Executive Order 11246 of September 24, 1965, with a contractor debarred from, or who has not demonstrated eligibility for, Government contracts and federally assisted construction contracts pursuant to the Executive Order and will carry out such sanctions and penalties for violation of the equal opportunity clause as may be imposed upon contractors and subcontractors by the administering agency or the Secretary of Labor pursuant to Part II, Subpart D of the Executive Order. In addition, the applicant agrees that if it fails or refuses to comply with these undertakings, the administering agency may take any or all of the following actions: Cancel, terminate, or suspend in whole or in part this grant (contract, loan, insurance, guarantee); refrain from extending any further assistance to the applicant under the program with respect to which the failure or refund occurred until satisfactory assurance of future compliance has been received from such applicant; and refer the case to the Department of Justice for appropriate legal proceedings."

4. Davis-Bacon Act

This statute requires that contractors must pay wages to laborers and mechanics at a rate not less than the prevailing wages specified in the Secretary of Labor's wage determination. Additionally, contractors are required to pay wages at least once per week.[8] Additional requirements are listed below, and relevant definitions are at 29 C.F.R. § 5.2. NFEs should refer to the applicable NOFO or other program guidance or contact their applicable FEMA grant representative for additional information on how to implement this requirement.

4.1 Applicability

When required by the federal program legislation, prime construction contracts over $2,000 awarded by NFEs must include a provision for compliance with the Davis-Bacon Act.[9]

The Davis-Bacon Act only applies to the Emergency Management Performance Grant Program,[10] Homeland Security Grant Program,[11] Nonprofit Security Grant Program,[12] Tribal Homeland Security Grant Program,[13] Port Security Grant Program,[14] Transit Security Grant Program,[15] Intercity Passenger Rail Program,[16] and Rehabilitation of High Hazard Potential Dams Program.[17] Unless otherwise stated in a program's authorizing statute, it *does not* apply to other FEMA grant and cooperative agreement programs, including the PA Program. .

[8] *See id.*; 40 U.S.C. §§ 3141-3144 and 3146-3148. The Davis-Bacon Act is supplemented by Department of Labor regulations at 29 C.F.R. Part 5 (Labor Standards Provisions Applicable to Contracts Covering federally Financed and Assisted Construction)
[9] 2 C.F.R. Part 200, Appendix II, § D.
[10] *See* section 611(j)(9) of the Robert T. Stafford Disaster Relief and Emergency Assistance Act (Stafford Act), Pub. L. No. 93-288 (codified as amended at 42 U.S.C. § 5196(j)(9)).
[11] *See* section 2008(b)(4)(B)(ii) of the Homeland Security Act of 2002, Pub. L. No. 107-296 (codified as amended at 6 U.S.C. § 609(b)(4)(B)(ii)) (citing to section 611(j)(9) of the Stafford Act).
[12] *Id.* The Davis-Bacon Act only applies to the Nonprofit Security Grant Program (NSGP) where that program is funded as a carve-out of the appropriations for the Homeland Security Grant Program (HSGP). *See, e.g.,* Department of Homeland Security Appropriations Act, 2020, Pub. L. No. 116-93, Title III, Protection, Preparedness, Response, and Recovery, Federal Emergency Management Agency, Federal Assistance §§ 1-2. *Compare id. with* section 2009 of the Homeland Security Act of 2002 (6 U.S.C. § 609a) (authorizing NSPG as a stand-alone program where the Davis-Bacon Act does not apply, but as of the date of publication of this document, NSGP has not been funded as a standalone program).
[13] *See* section 2008(b)(4)(B)(ii) of the Homeland Security Act of 2002.
[14] *See* section 102 of the Maritime Transportation Security Act of 2002 (MTSA), Pub. L. No. 107-295 (codified as amended at 46 U.S.C. § 70107); 46 U.S.C. § 70107(b)(2). While the MTSA requires that PSGP construction activities are carried out consistent with section 611(j)(8) of the Stafford Act, a subsequent amendment to the Stafford Act by section 3 of Pub. L. No. 109-308 in 2006 redesignated the text of section 611(j)(8) to 611(j)(9). The cross-reference in the MTSA has not been updated.
[15] *See* section 1406 of the Implementing Recommendations of the 9/11 Commission Act of 2007 (9/11 Act), Pub. L. No. 110-53 (6 U.S.C. § 1135) (applying the requirements of section 49 U.S.C. § 5307); 49 U.S.C. § 5333 (applying the Davis-Bacon Act to grants provided under 49 U.S.C. § 5307).
[16] *See* section 1513(h) of the 9/11 Act (6 U.S.C. § 1163(h)) (citing to 49 U.S.C. § 24312, which requires compliance with the Davis-Bacon Act).
[17] *See* section 8A(d)(2)(E) of the National Dam Safety Program Act (codified as amended at 33 U.S.C. § 467f-2(d)(2)(E)) (requiring compliance with 42 U.S.C. § 5196(j)(9), which is section 611(j)(9) of the Stafford Act that applies the Davis-Bacon Act).

4.2 Additional Requirements

If applicable, in addition to the requirements mentioned in the beginning of this section, the NFE must do the following:

- Place a copy of the Department of Labor's current prevailing wage determination in each solicitation. Contracts or subcontracts must be awarded on the condition that the prevailing wage determination is accepted. The non-federal entity must report all suspected or reported violations to the federal awarding agency.[18]

- Include a provision for compliance with the Copeland "Anti-Kickback" Act for all contracts subject to the Davis-Bacon Act.[19] *See* Required Contract Provisions, Section 5. Copeland Anti-Kickback Act in this Guide for additional information. According to 29 C.F.R. § 5.5(a)(5), the regulatory requirements for the Copeland "Anti-Kickback" Act are incorporated by reference into the required contract provision, so a separate contract provision is not necessary. However, the NFE may include a separate contract provision specific to the Copeland "Anti-Kickback" Act.

- Per Department of Labor's implementing regulations for the Davis-Bacon Act, the NFEs contractor and any subcontractors are required to insert, or incorporate by reference, the clauses contained at 29 C.F.R. § 5.5(a)(1)-(10)[20] into any subcontracts.

- Follow the other requirements of the Davis-Bacon Act and implementing regulations.[21]

4.3 Required Language[22]

If applicable per the standard described above, the NFE must include the provisions at 29 C.F.R. § 5.5(a)(1)-(10) in full into all applicable contracts, and all applicable contractors must include these provisions in full in any subcontracts.[23]

5. Copeland "Anti-Kickback" Act

The Copeland "Anti-Kickback" Act prohibits workers on construction contracts from giving up wages that they are owed.[24] Additional requirements are listed below, and relevant definitions are at 29 C.F.R. § 3.2. The applicable implementing regulations are intended to assist with enforcement of the

[18] 2 C.F.R. Part 200, Appendix II, § D.
[19] 2 C.F.R. Part 200, Appendix II, § D.
[20] 29 C.F.R. § 5.5(a)(6).
[21] 40 U.S.C. §§ 3141-3144, 3146-3148; 29 C.F.R. Part 5.
[22] 29 C.F.R. § 5.5(a).
[23] 29 C.F.R. § 5.5(a)(1), (6).
[24] *See id.*; 40 U.S.C. § 3145. The Copeland "Anti-Kickback" Act is supplemented by Department of Labor regulations at 29 C.F.R. Part 3 (Contractors and Subcontractors on Public Building or Public Work Financed in Whole or in Part by Loans or Grants from the United States).

Davis-Bacon Act's minimum wage provisions as well as various statutes with similar minimum wage provisions for federally assisted construction.[25]

5.1 Applicability

For all prime construction contracts above $2,000, when the Davis-Bacon Act also applies,[26] NFEs must include a provision in contracts and subcontracts for compliance with the Copeland "Anti-Kickback" Act.[27] This requirement applies to all prime construction contracts above $2,000 in situations where the Davis-Bacon Act also applies.[28] In situations where the Davis-Bacon Act does not apply, neither does the Copeland "Anti-Kickback" Act. As described in section A.4 regarding the Davis-Bacon Act, this provision only applies to certain FEMA grant and cooperative agreement programs. Please reference that list discussed above. Of note, it does not apply to the PA Program.

5.2 Additional Requirements

If applicable, the NFE must do the following:

- Include a provision for compliance with the Copeland "Anti-Kickback" Act.[29] According to the Davis-Bacon Act implementing regulations, the requirements for the Copeland "Anti-Kickback" Act are incorporated into the required contract provision for the Davis-Bacon Act by reference.[30] Therefore, a separate contract provision is not necessary. However, the NFE may include a separate contract provision specific to the Copeland "Anti-Kickback" Act with language suggested below.

- The Copeland "Anti-Kickback Act" prohibits each contractor or subcontractor from any form of persuading a person employed in construction, completion, or repair of public work to give up any part of their rightful compensation. The NFE must report all suspected or reported violations of the Copeland "Anti-Kickback Act" to FEMA.[31]

- Each contractor and subcontractor must provide weekly reports of the wages paid during the prior week's payroll period to each employee covered by the "Copeland Anti-Kickback" Act and the Davis-Bacon Act. The reports must be delivered to a representative of a federal or state agency in charge at the building or work site by the contractor or subcontractor within seven days of the payroll period's payment date.[32]

[25] *See* 29 C.F.R. § 3.1.
[26] *See* 2 C.F.R. Part 200, Appendix II, § D; 29 C.F.R. §§ 3.1, 3.3(c).
[27] 2 C.F.R. Part 200, Appendix II, § D.
[28] *See* 2 C.F.R. Part 200, Appendix II, § D; 29 C.F.R. § 3.3(c).
[29] *See* 29 C.F.R. § 3.11.
[30] 29 C.F.R. § 5.5(a)(5).
[31] *See* 2 C.F.R. Part 200, Appendix II, § D.
[32] *See* 29 C.F.R. § 3.4.

- Follow the other requirements of the Copeland "Anti-Kickback" Act and implementing regulations.[33]

5.3 Suggested Language

The following provides a sample contract clause:

> "Compliance with the Copeland "Anti-Kickback" Act.
>
> Contractor. The contractor shall comply with 18 U.S.C. § 874, 40 U.S.C. § 3145, and the requirements of 29 C.F.R. Part 3 as may be applicable, which are incorporated by reference into this contract.
>
> Subcontracts. The contractor or subcontractor shall insert in any subcontracts the clause above and such other clauses as FEMA may by appropriate instructions require, and also a clause requiring the subcontractors to include these clauses in any lower tier subcontracts. The prime contractor shall be responsible for the compliance by any subcontractor or lower tier subcontractor with all of these contract clauses.
>
> Breach. A breach of the contract clauses above may be grounds for termination of the contract, and for debarment as a contractor and subcontractor as provided in 29 C.F.R. § 5.12."

6. Contract Work Hours and Safety Standards Act

Where applicable,[34] all contracts awarded by the NFE of more than $100,000 that involve the employment of mechanics or laborers must include a provision for compliance with statutory requirements on work hours and safety standards.[35] Under 40 U.S.C. § 3702, each contractor must base wages for every mechanic and laborer on a standard 40-hour work week. Work over 40 hours is allowed, so long as the worker is paid at least one and a half times the base pay rate for all hours worked over 40 hours in the work week. Additionally, for construction work, under 40 U.S.C. § 3704, work surroundings and conditions for laborers and mechanics must not be unsanitary or unsafe. Relevant definitions are at 40 U.S.C. § 3701 and 29 C.F.R. § 5.2.

6.1 Applicability

This required contract provision applies to all procurements over $100,000 that involve the employment of mechanics, laborers, and construction work.[36] These requirements *do not* apply to

[33] 18 U.S.C. § 874; 40 U.S.C. § 3145; 29 C.F.R. Part 3.
[34] *See* 40 U.S.C. §§ 3701-3708.
[35] 40 U.S.C. §§ 3702, 3704. The Contract Work Hours and Safety Standards Act is supplemented by Department of Labor regulations at 29 C.F.R. Part 5. *See* 2 C.F.R. Part 200, Appendix II, § E.
[36] 41 C.F.R. Part 60-1.3.

the purchase of supplies or materials or articles ordinarily available on the open market, or contracts for transportation or transmission of intelligence.[37]

6.2 Additional Requirements

If applicable per the standard described above, the non-federal entity must include the provisions at 29 C.F.R. § 5.5(b)(1)-(4), verbatim, into all applicable contracts, and all applicable contractors must include these provisions, in full, into any subcontracts.[38]

In addition to the required language from 29 C.F.R. § 5.5(b)(1)-(4), in any contract subject only to the Contract Work Hours and Safety Standards Act and not to any other statutes cited in 29 C.F.R. § 5.1, the NFE must also insert a clause meeting the requirements of 29 C.F.R. § 5.5(c). Specific language is not required, but FEMA has provided suggested language below.

6.3 Required Language

For the required contract provision, the language from 29 C.F.R. § 5.5(b)(1)-(4) is provided here for ease of reference:

> "Compliance with the Contract Work Hours and Safety Standards Act.
>
> (1) *Overtime requirements.* No contractor or subcontractor contracting for any part of the contract work which may require or involve the employment of laborers or mechanics shall require or permit any such laborer or mechanic in any workweek in which he or she is employed on such work to work in excess of forty hours in such workweek unless such laborer or mechanic receives compensation at a rate not less than one and one-half times the basic rate of pay for all hours worked in excess of forty hours in such workweek.
>
> (2) *Violation; liability for unpaid wages; liquidated damages.* In the event of any violation of the clause set forth in paragraph (b)(1) of this section the contractor and any subcontractor responsible therefor shall be liable for the unpaid wages. In addition, such contractor and subcontractor shall be liable to the United States (in the case of work done under contract for the District of Columbia or a territory, to such District or to such territory), for liquidated damages. Such liquidated damages shall be computed with respect to each individual laborer or mechanic, including watchmen and guards, employed in violation of the clause set forth in paragraph (b)(1) of this section, in the sum of $27 for each calendar day on which such individual was required or permitted to work in excess of the standard workweek of forty hours without payment of the overtime wages required by the clause set forth in paragraph (b)(1) of this section.
>
> (3) *Withholding for unpaid wages and liquidated damages.* The (insert name of grant recipient or subrecipient) shall upon its own action or upon written request of an authorized representative of the Department of Labor withhold or cause to be withheld, from any moneys payable on account of work performed by the contractor or subcontractor under any such contract or any other

[37] 2 C.F.R. Part 200, Appendix II, § E.
[38] 29 C.F.R. § 5.5(b)(1), (4).

federal contract with the same prime contractor, or any other federally-assisted contract subject to the Contract Work Hours and Safety Standards Act, which is held by the same prime contractor, such sums as may be determined to be necessary to satisfy any liabilities of such contractor or subcontractor for unpaid wages and liquidated damages as provided in the clause set forth in paragraph (b)(2) of this section.

(4) *Subcontracts.* The contractor or subcontractor shall insert in any subcontracts the clauses set forth in paragraph (b)(1) through (4) of this section and also a clause requiring the subcontractors to include these clauses in any lower tier subcontracts. The prime contractor shall be responsible for compliance by any subcontractor or lower tier subcontractor with the clauses set forth in paragraphs (b)(1) through (4) of this section."

6.4 Suggested Language

For contracts that are only subject to Contract Work Hours and Safety Standards Act and are not subject to the other statutes in 29 C.F.R. § 5.1 where an additional contract provision is required, FEMA suggests including the following language:

"Further Compliance with the Contract Work Hours and Safety Standards Act.

(1) The contractor or subcontractor shall maintain payrolls and basic payroll records during the course of the work and shall preserve them for a period of three years from the completion of the contract for all laborers and mechanics, including guards and watchmen, working on the contract. Such records shall contain the name and address of each such employee, social security number, correct classifications, hourly rates of wages paid, daily and weekly number of hours worked, deductions made, and actual wages paid.

(2) Records to be maintained under this provision shall be made available by the contractor or subcontractor for inspection, copying, or transcription by authorized representatives of the Department of Homeland Security, the Federal Emergency Management Agency, and the Department of Labor, and the contractor or subcontractor will permit such representatives to interview employees during working hours on the job."

7. Rights to Inventions Made Under a Contract or Agreement

This contract provision outlines the rules governing the ownership of inventions created using federal funds. If the FEMA award meets the definition of funding agreement[39] and the NFE enters into any contract involving substitution of parties, assignment or performance of experimental, developmental, or research work under that funding agreement, then the NFE must comply with the requirements of 37 C.F.R. Part 401 and any implementing regulations issued by FEMA.

[39] Funding agreement definition found under 37 C.F.R. § 401.2(a).

7.1 Applicability

This provision *does not* apply to all FEMA grant and cooperative agreement programs. NFEs should refer to applicable NOFO or other program guidance or contact their applicable FEMA grant representative to determine if this provision is required for the procurement. However, the Rights to Inventions Made Under a Contract or Agreement clause is not required for procurements under FEMA's PA Program.

7.2 Key Definitions

Funding Agreements: The regulation at 37 C.F.R. § 401.2(a) defines *funding agreement* as "any contract, grant, or cooperative agreement entered into between any federal agency, other than the Tennessee Valley Authority, and any contractor for the performance of experimental, developmental, or research work funded in whole or in part by the federal government. This term also includes any assignment, substitution of parties, or subcontract of any type entered into for the performance of experimental, developmental, or research work under a funding agreement as defined in the first sentence of this paragraph."

8. Clean Air Act and Federal Water Pollution Control Act

For contracts over $150,000, contracts must contain a provision requiring contractors to comply with the Clean Air Act[40] and the Federal Water Pollution Control Act.[41] Violations must be reported to FEMA and the Regional Office of the Environmental Protection Agency (EPA).[42]

8.1 Applicability

This contract provision is required for all procurements over $150,000.

8.2 Suggested Language

The following provides a sample contract clause:

"Clean Air Act"

The contractor agrees to comply with all applicable standards, orders or regulations issued pursuant to the Clean Air Act, as amended, 42 U.S.C. § 7401 *et seq.*

The contractor agrees to report each violation to the (insert name of non-federal entity entering into the contract) and understands and agrees that the (insert name of the non-federal entity entering into the contract) will, in turn, report each violation as required to

[40] 42 U.S.C. §§ 7401-7671q. This also includes all applicable standards, orders, or regulations issued pursuant to the Clean Air Act.
[41] 33 U.S.C. §§ 1251-1387, as amended.
[42] 2 C.F.R. Part 200, Appendix II, § G.

assure notification to the Federal Emergency Management Agency (FEMA), and the appropriate Environmental Protection Agency Regional Office.

The contractor agrees to include these requirements in each subcontract exceeding $150,000 financed in whole or in part with federal assistance provided by FEMA.

"Federal Water Pollution Control Act"

The contractor agrees to comply with all applicable standards, orders, or regulations issued pursuant to the federal Water Pollution Control Act, as amended, 33 U.S.C. § 1251 *et seq.*

The contractor agrees to report each violation to the (**insert name of the non-federal entity entering into the contract**) and understands and agrees that the (**insert name of the non-federal entity entering into the contract**) will, in turn, report each violation as required to assure notification to the (**insert name of the pass-through entity, if applicable**), Federal Emergency Management Agency (FEMA), and the appropriate Environmental Protection Agency Regional Office.

The contractor agrees to include these requirements in each subcontract exceeding $150,000 financed in whole or in part with federal assistance provided by FEMA."

9. Debarment and Suspension

NFEs contractors and subcontractors are subject to debarment and suspension regulations.[43] Applicable contracts and subcontracts must include a provision requiring compliance with debarment and suspension regulations.[44]

9.1 Applicability

The debarment and suspension clause is required for all contracts and subcontracts for $25,000 or more, all contracts that require the consent of an official of a federal agency, and all contracts for federally required audit services.[45]

NFEs, even for procurements under $25,000, must also comply with the regulation requiring non-state entities to only award contracts to responsible vendors.[46]

[43] 2 C.F.R. Part 180 (implementing Executive Order 12549, Debarment and Suspension (1986) and Executive Order 12689, Debarment and Suspension (1989)); 2 C.F.R. Part 3000 (Department of Homeland Security regulations for Nonprocurement Debarment and Suspension, implementing 2 C.F.R. Part 180).
[44] 2 C.F.R. § 180; 2 C.F.R. Part 200, Appendix II, § H; 2 C.F.R. § 3000.332.
[45] 2 C.F.R. § 180.220(b); 2 C.F.R. § 3000.220.
[46] 2 C.F.R. § 200.318(h). For contracts and subcontracts under $25,000, a contract provision is only required if those contracts or subcontracts are for federally required audit services or require the consent of a federal agency. However, even where a contract provision is not required, non-state entities must still ensure they are only awarding contracts to responsible vendors.

9.2 Additional Requirements

The debarment and suspension regulations restrict awards, subawards, contracts, and subcontracts with parties that are debarred, suspended, or otherwise excluded, or declared ineligible for participation in federal assistance programs and activities.[47]

If applicable, a contract or subcontract must not be made to parties listed on the governmentwide exclusions in the System for Award Management (SAM). SAM Exclusions is the list maintained by the General Services Administration that contains the names of parties that are debarred, suspended, or otherwise excluded, or declared ineligible under statutory or regulatory authority other than Executive Order 12549.[48] SAM Exclusions can be accessed at www.sam.gov.[49]

In general, an "excluded" party cannot receive a federal grant award or a contract considered to be a "covered transaction," which includes parties that receive federal funding indirectly such as subawards and subcontracts. The key to the exclusion is whether there is a covered transaction. A covered transaction is a nonprocurement transaction at either a primary or secondary tier.[50]

Specifically, a covered transaction includes the following contracts for goods or services under FEMA grant and cooperative agreement programs:

- The contract is at least $25,000.
- The contract requires the approval of FEMA, regardless of amount.
- The contract is for federally required audit services.
- It is a subcontract for $25,000 or more.[51]

9.3 Suggested Language

The following provides a debarment and suspension clause. It also incorporates an optional method of verifying that contractors are not excluded or disqualified[52]:

[47] *See* 2 C.F.R. Part 200, Appendix II, § H; 2 C.F.R. § 200.213. *See also* 2 C.F.R. Parts 180, 3000.
[48] *See* 2 C.F.R. Part 200, Appendix II, § H.
[49] 2 C.F.R. § 180.530.
[50] The regulations at 2 C.F.R. Parts 180 and 3000 are titled "nonprocurement" because they do not apply to procurements by the federal government but rather to federal financial assistance. There are separate debarment and suspension regulations covering procurements by the federal government. However, although the term "covered transactions" under 2 C.F.R. Parts 180 and 3000 *does not* include contracts awarded by the federal government, it *does* include some contracts awarded by recipients and subrecipients.
[51] *See* 2 C.F.R. §§ 180.220, 3000.220.
[52] Per 2 C.F.R. § 180.300, non-federal entity about to enter into an applicable contract, or a contractor about to entire into an applicable subcontract, must verify that the contractor or subcontractor is not excluded or disqualified by doing one of three things: 1) check SAM Exclusions; 2) collect a certification from the contractor or subcontractor; or 3) add a clause or condition to the contract or subcontract. The additional suggested language in this sample clause is for purposes of this requirement.

"Suspension and Debarment

This contract is a covered transaction for purposes of 2 C.F.R. Part 180 and 2 C.F.R. Part 3000. As such, the contractor is required to verify that none of the contractor's principals (defined at 2 C.F.R. § 180.995) or its affiliates (defined at 2 C.F.R. § 180.905) are excluded (defined at 2 C.F.R. § 180.940) or disqualified (defined at 2 C.F.R. § 180.935).

The contractor must comply with 2 C.F.R. Part 180, subpart C and 2C.F.R. Part 3000, subpart C, and must include a requirement to comply with these regulations in any lower tier covered transaction it enters into.

This certification is a material representation of fact relied upon by (insert name of recipient/subrecipient/applicant). If it is later determined that the contractor did not comply with 2 C.F.R. Part 180, subpart C and 2 C.F.R. Part 3000, subpart C, in addition to remedies available to (insert name of recipient/subrecipient/applicant), the federal government may pursue available remedies, including but not limited to suspension and/or debarment.

The bidder or proposer agrees to comply with the requirements of 2 C.F.R. Part 180, subpart C and 2 C.F.R. Part 3000, subpart C while this offer is valid and throughout the period of any contract that may arise from this offer. The bidder or proposer further agrees to include a provision requiring such compliance in its lower tier covered transactions."

10. Byrd Anti-Lobbying Amendment

NFEs who intend to award contracts of more than $100,000, and their contractors who intend to award subcontracts of more than $100,000, must include a contract provision prohibiting the use of federal appropriated funds to influence officers or employees of the federal government. Contractors that apply or bid for a contract for more than $100,000 must also file the required certification regarding lobbying.[53]

Each tier certifies to the tier above that it will not and has not used federal appropriated funds to pay any person or organization for influencing or attempting to influence an employee of a federal agency, a Member of Congress, an employee of Congress, or an employee of a Member of Congress in connection with receiving any federal contract, grant, or other award covered by 31 U.S.C. § 1352.

[53] *See* 2 C.F.R. Part 200, Appendix II, § I (citing 31 U.S.C. § 1352); 44 C.F.R. § 18.110.

The required certification form is found in FEMA regulations.[54] Each tier must also disclose any lobbying with non-federal funds that takes place in connection with obtaining any federal funding. These disclosures are forwarded from tier to tier, all the way up to the federal awarding agency.[55]

10.1 Applicability

The Byrd Anti-Lobbying Amendment clause and certification are required for contracts of more than $100,000, and for subcontracts of more than $100,000.

10.2 Suggested Language

The following provides a sample contract clause:

> "Byrd Anti-Lobbying Amendment, 31 U.S.C. § 1352 (as amended)
>
> > Contractors who apply or bid for an award of more than $100,000 shall file the required certification. Each tier certifies to the tier above that it will not and has not used federally appropriated funds to pay any person or organization for influencing or attempting to influence an officer or employee of any agency, a Member of Congress, officer or employee of Congress, or an employee of a Member of Congress in connection with obtaining any federal contract, grant, or any other award covered by 31 U.S.C. § 1352. Each tier shall also disclose any lobbying with non-federal funds that takes place in connection with obtaining any federal award. Such disclosures are forwarded from tier to tier up to the recipient who in turn will forward the certification(s) to the federal awarding agency."

10.3 Required Certification

10.3.1 REQUIRED CERTIFICATION LANGUAGE

If applicable, contractors must sign and submit the following certification to the NFE with each bid or offer exceeding $100,000:

> "APPENDIX A, 44 C.F.R. PART 18 – CERTIFICATION REGARDING LOBBYING
>
> Certification for Contracts, Grants, Loans, and Cooperative Agreements
>
> The undersigned certifies, to the best of his or her knowledge and belief, that:
>
> > No federal appropriated funds have been paid or will be paid, by or on behalf of the undersigned, to any person for influencing or attempting to influence an officer or employee

[54] *See* 44 C.F.R. §§ 18.100, 18.110; 44 C.F.R. Part 18, Appendix A. FEMA's regulations at 44 C.F.R. Part 18 implement the requirements of 31 U.S.C. § 1352 and provides, in Appendix A to Part 18, a copy of the certification that is required to be completed by each entity as described in 31 U.S.C. § 1352.
[55] *See* 44 C.F.R. §§ 18.100, 18.110; 44 C.F.R. Part 18, Appendix B. The specific form for disclosures is referenced in Appendix B to 44 C.F.R. Part 18 and is SF-LLL, also available at https://www.grants.gov/web/grants/forms/sf-424-family.html.

of an agency, a Member of Congress, an officer or employee of Congress, or an employee of a Member of Congress in connection with the awarding of any federal contract, the making of any federal grant, the making of any federal loan, the entering into of any cooperative agreement, and the extension, continuation, renewal, amendment, or modification of any federal contract, grant, loan, or cooperative agreement.

If any funds other than federal appropriated funds have been paid or will be paid to any person for influencing or attempting to influence an officer or employee of any agency, a Member of Congress, an officer or employee of Congress, or an employee of a Member of Congress in connection with this federal contract, grant, loan, or cooperative agreement, the undersigned shall complete and submit Standard Form-LLL, "Disclosure Form to Report Lobbying," in accordance with its instructions.

The undersigned shall require that the language of this certification be included in the award documents for all subawards at all tiers (including subcontracts, subgrants, and contracts under grants, loans, and cooperative agreements) and that all subrecipients shall certify and disclose accordingly.

This certification is a material representation of fact upon which reliance was placed when this transaction was made or entered into. Submission of this certification is a prerequisite for making or entering into this transaction imposed by section 1352, Title 31, U.S.C. Any person who fails to file the required certification shall be subject to a civil penalty of not less than $10,000 and not more than $100,000 for each such failure."

10.3.2 RECOMMENDED SIGNATURE LINE:

At the end of the certification language, FEMA recommends including the following signature line.

"The Contractor,_____, certifies or affirms the truthfulness and accuracy of each statement of its certification and disclosure, if any. In addition, the Contractor understands and agrees that the provisions of 31 U.S.C. Chap. 38, Administrative Remedies for False Claims and Statements, apply to this certification and disclosure, if any.

_____

Signature of Contractor's Authorized Official

_____

Name and Title of Contractor's Authorized Official

_____

Date"

11. Procurement of Recovered Materials

An NFE that is a state agency or an agency of a political subdivision of a state, and the NFE's contractors must comply with Section 6002 of the Solid Waste Disposal Act.[56] Applicable NFEs must include a contract provision requiring compliance with this requirement.[57] This includes contracts awarded by a state agency or political subdivision of a state and its contractors for certain items, as designated by the EPA, with a purchase price greater than $10,000.[58] Indian Tribal Governments and nonprofit organizations are not required to comply with this provision. Additional requirements are listed below.

11.1 Applicability

This required contract provision applies to all procurements over $10,000 made by a state agency or an agency of a political subdivision of a state and its contractors.

11.2 Additional Requirements

The requirements include:

- Procuring only items designated in EPA guidelines[59] that contain the highest practical percentage of recovered materials consistent with maintaining competition, where the purchase price of the item is greater than $10,000, or the value of the amount of items purchased in the preceding fiscal year was greater than $10,000;
- Procuring solid waste management services in a way that maximizes energy and resource recovery; and
- Establishing an affirmative procurement program for procurement of recovered materials identified in the EPA guidelines.[60]

11.3 Suggested Language

The following provides a sample contract clause:

> "In the performance of this contract, the Contractor shall make maximum use of products containing recovered materials that are EPA-designated items unless the product cannot be acquired—

[56] Pub. L. No. 89-272 (1965) (codified as amended by the Resource Conservation and Recovery Act at 42 U.S.C. § 6962). 2 C.F.R. § 200.323.
[57] *See* 2 C.F.R. Part 200, Appendix II, § J (citing 2 C.F.R. § 200.323).
[58] *See* 2 C.F.R. Part 200, Appendix II, § J; 2 C.F.R. § 200.323; 40 C.F.R. Part 247.
[59] 40 C.F.R. Part 247.
[60] 42 U.S.C. § 6962; 2 C.F.R. § 200.323.

Competitively within a timeframe providing forcompliance with the contract performance schedule;

Meeting contract performance requirements; or

At a reasonable price.

Information about this requirement, along with the list of EPA-designated items, is available at EPA's Comprehensive Procurement Guidelines webpage: https://www.epa.gov/smm/comprehensive- procurement-guideline-cpg-program.

The Contractor also agrees to comply with all other applicable requirements of Section 6002 of the Solid Waste Disposal Act."

12. Prohibition on Contracting for Covered Telecommunications Equipment or Services

Section 889(b)(1) of the John S. McCain National Defense Authorization Act for Fiscal Year 2019 (FY2019 NDAA) and 2 C.F.R. § 200.216, as implemented by FEMA Policy 405-143-1, Prohibitions on Expending FEMA Award Funds for Covered Telecommunications Equipment or Services (Interim), prohibit the obligation or expending of federal award funds on certain telecommunication products or from certain entities for national security reasons. Effective August 13, 2020, FEMA recipients and subrecipients, as well as their contractors and subcontractors, *may not* obligate or expend any FEMA award funds to:

a. Procure or obtain any equipment, system, or service that uses covered telecommunications equipment or services as a substantial or essential component of any system, or as critical technology of any system;

b. Enter into, extend, or renew a contract to procure or obtain any equipment, system, or service that uses covered telecommunications equipment or services as a substantial or essential component of any system, or as critical technology of any system; or

c. Enter into, extend, or renew contracts with entities that use covered telecommunications equipment or services as a substantial or essential component of any system, or as critical technology as part of any system.

12.1 Applicability

For purchases in support of FEMA declarations and awards issued on or after November 12, 2020, all FEMA recipients and subrecipients, and their contractors and subcontractors, are required to include this contract provision in all FEMA-funded contracts and subcontracts, including any purchase orders.[61] FEMA strongly encourages the use of this contract clause for any contracts where

[61] 2 C.F.R. Part 200, Appendix II, § K (citing 2 C.F.R. § 200.216).

FEMA funding will be used regardless of whether the funding is from FEMA declarations or awards issued on or after November 12, 2020.

12.2 Suggested Language

The following provides a sample contract clause:

"Prohibition on Contracting for Covered Telecommunications Equipment or Services

(a) *Definitions.* As used in this clause, the terms backhaul; covered foreign country; covered telecommunications equipment or services; interconnection arrangements; roaming; substantial or essential component; and telecommunications equipment or services have the meaning as defined in FEMA Policy 405-143-1, Prohibitions on Expending FEMA Award Funds for Covered Telecommunications Equipment or Services (Interim), as used in this clause—

(b) *Prohibitions.*

(1) Section 889(b) of the John S. McCain National Defense Authorization Act for Fiscal Year 2019, Pub. L. No. 115-232, and 2 C.F.R. § 200.216 prohibit the head of an executive agency on or after Aug.13, 2020, from obligating or expending grant, cooperative agreement, loan, or loan guarantee funds on certain telecommunications products or from certain entities for national security reasons.

(2) Unless an exception in paragraph (c) of this clause applies, the contractor and its subcontractors may not use grant, cooperative agreement, loan, or loan guarantee funds from the Federal Emergency Management Agency to:

(i) Procure or obtain any equipment, system, or service that uses covered telecommunications equipment or services as a substantial or essential component of any system, or as critical technology of any system;

(ii) Enter into, extend, or renew a contract to procure or obtain any equipment, system, or service that uses covered telecommunications equipment or services as a substantial or essential component of any system, or as critical technology of any system;

(iii) Enter into, extend, or renew contracts with entities that use covered telecommunications equipment or services as a substantial or essential component of any system, or as critical technology as part of any system; or

(iv) Provide, as part of its performance of this contract, subcontract, or other contractual instrument, any equipment, system, or service that uses covered telecommunications equipment or services as a substantial or essential component of any system, or as critical technology as part of any system.

(c) *Exceptions.*

(1) This clause does not prohibit contractors from providing—
(i) A service that connects to the facilities of a third-party, such as backhaul, roaming, or interconnection arrangements; or

(ii) Telecommunications equipment that cannot route or redirect user data traffic or permit visibility into any user data or packets that such equipment transmits or otherwise handles.

(2) By necessary implication and regulation, the prohibitions also do not apply to:

(i) Covered telecommunications equipment or services that:

i. Are *not used* as a substantial or essential component of any system; *and*

ii. Are *not used* as critical technology of any system.

(ii) Other telecommunications equipment or services that are not considered covered telecommunications equipment or services.

(d) *Reporting requirement.*

(1) In the event the contractor identifies covered telecommunications equipment or services used as a substantial or essential component of any system, or as critical technology as part of any system, during contract performance, or the contractor is notified of such by a subcontractor at any tier or by any other source, the contractor shall report the information in paragraph (d)(2) of this clause to the recipient or subrecipient, unless elsewhere in this contract are established procedures for reporting the information.

(2) The Contractor shall report the following information pursuant to paragraph (d)(1) of this clause:

(i) Within one business day from the date of such identification or notification: The contract number; the order number(s), if applicable; supplier name; supplier unique entity identifier (if known); supplier Commercial and Government Entity (CAGE) code (if known); brand; model number (original equipment manufacturer number, manufacturer part number, or wholesaler number); item description; and any readily available information about mitigation actions undertaken or recommended.

(ii) Within 10 business days of submitting the information in paragraph (d)(2)(i) of this clause: Any further available information about mitigation actions undertaken or recommended. In addition, the contractor shall describe the efforts it undertook to prevent use or submission of covered telecommunications equipment or services, and any additional efforts that will be incorporated to prevent future use or submission of covered telecommunications equipment or services.

(e) *Subcontracts.* The Contractor shall insert the substance of this clause, including this paragraph (e), in all subcontracts and other contractual instruments."

13. Domestic Preferences for Procurements

As appropriate, and to the extent consistent with law, NFEs should, to the greatest extent practicable under a federal award, provide a preference for the purchase, acquisition, or use of goods, products or materials produced in the United States. This includes, but is not limited to, iron, aluminum, steel, cement, and other manufactured products.[62]

13.1 Applicability

For purchases in support of FEMA declarations and awards issued on or after November 12, 2020, all FEMA recipients and subrecipients are required to include in all contracts and purchase orders for work or products a contract provision encouraging domestic preference for procurements.[63]

13.2 Suggested Language

The following provides a sample contract clause:

> "Domestic Preference for Procurements
>
> As appropriate, and to the extent consistent with law, the contractor should, to the greatest extent practicable, provide a preference for the purchase, acquisition, or use of goods, products, or materials produced in the United States. This includes, but is not limited to iron, aluminum, steel, cement, and other manufactured products.
>
> For purposes of this clause:
>
> *Produced in the United States* means, for iron and steel products, that all manufacturing processes, from the initial melting stage through the application of coatings, occurred in the United States.
>
> *Manufactured products* mean items and construction materials composed in whole or in part of non-ferrous metals such as aluminum; plastics and polymer-based products such as polyvinyl chloride pipe; aggregates such as concrete; glass, including optical fiber; and lumber."

[62] *See* 2 C.F.R. § 200.322.
[63] 2 C.F.R. Part 200, Appendix II, § L (citing 2 C.F.R. § 200.322). The requirements of 2 C.F.R. § 200.322 must also be included in all subawards.

Attachment E
Certification Regarding Lobbying

APPENDIX A, 44 CFR PART 18 – CERTIFICATION REGARDING LOBBYING

Certification for Contracts, Grants, Loans, and Cooperative Agreements

The undersigned certifies, to the best of his or her knowledge and belief, that:

1. No Federal appropriated funds have been paid or will be paid, by or on behalf of the undersigned, to any person for influencing or attempting to influence an officer or employee of an agency, a Member of Congress, an officer or employee of Congress, or an employee of a Member of Congress in connection with the awarding of any Federal contract, the making of any Federal grant, the making of any Federal loan, the entering into of any cooperative agreement, and the extension, continuation, renewal, amendment, or modification of any Federal contract, grant, loan, or cooperative agreement.

2. If any funds other than Federal appropriated funds have been paid or will be paid to any person for influencing or attempting to influence an officer or employee of any agency, a Member of Congress, an officer or employee of Congress, or an employee of a Member of Congress in connection with this Federal contract, grant, loan, or cooperative agreement, the undersigned shall complete and submit Standard Form-LLL, "Disclosure Form to Report Lobbying," in accordance with its instructions.

3. The undersigned shall require that the language of this certification be included in the award documents for all subawards at all tiers (including subcontracts, subgrants, and contracts under grants, loans, and cooperative agreements) and that all Subrecipients shall certify and disclose accordingly.

This certification is a material representation of fact upon which reliance was placed when this transaction was made or entered into. Submission of this certification is a prerequisite for making or entering into this transaction imposed by section 1352, title 31, U.S. Code. Any person who fails to file the required certification shall be subject to a civil penalty of not less than $10,000 and not more than $100,000 for each such failure.

The Subrecipient or contractor, _____, certifies or affirms the truthfulness and accuracy of each statement of its certification and disclosure, if any. In addition, the Contractor understands and agrees that the provisions of 31 U.S.C. Chap. 38, Administrative Remedies for False Claims and Statements, apply to this certification and disclosure, if any.

_____
Signature of Subrecipient/contractor's Authorized Official

Scott Stiltner, Mayor
_____
Name and Title of Subrecipient/contractor's Authorized Official

_____
Date

ATTACHMENT F
FOREIGN COUNTRY OF CONCERN ATTESTATION
(PUR 1355)

This form must be completed by an officer or representative of an entity submitting a bid, proposal, or reply to, or entering into, renewing, or extending, a contract with a Governmental Entity which would grant the entity access to an individual's Personal Identifying Information.

Capitalized terms used herein have the definitions ascribed in Rule 60A-1.020, F.A.C.

Name of entity is not owned by the government of a Foreign Country of Concern, is not organized under the laws of nor has its Principal Place of Business in a Foreign Country of Concern, and the government of a Foreign County of Concern does not have a Controlling Interest in the entity.

Under penalties of perjury, I declare that I have read the foregoing statement and that the facts stated in it are true.

Printed Name: Scott Stiltner

Title: Mayor

Signature:

Date:

CITY COUNCIL AGENDA ITEM

COUNCIL MEETING DATE 3/18/2025

SUBJECT: (D9) Resolution No. 25-18 - Waiver of Building Permit Fees to bring a Substantially Damaged Structure into Compliance.

DEPARTMENT: Community Development

GOAL: 2 - Infrastructure

RECOMMENDED MOTION: Move to approve Resolution 25-18

SUMMARY: At the December 10, 2024, Council approved waiving building permit fees for structures damaged by Hurricanes Ian, Nicole, and Idalia if participants are in the FEMA Hazard Mitigation Grant Program (HMGP), FEMA Flood Mitigation Assistance (FMA), or Volusia County Transform 386 Program (Resolution No. 24-53). However, people who are bringing substantially damaged structures into compliance with funds other than money from the grant programs were not included.

Staff requests approval of Resolution No. 25-18, which will amend and restate Resolution No. 24-53 to include waiving building permit fees for property owners bringing a substantially damaged structure into compliance with the Florida Building Code, FEMA National Flood Insurance Program (NFIP), and the City's Land Development Code with any funding source including the grant programs, personal funds, etc...

Building permit fees for all repairs associated with Hurricane Milton are currently waived through Monday, July 28, 2025**,** pursuant to Resolution 25-10.

PRESENTER: Tim Burman

ATTACHMENTS:

1.	Resolution No. 25-18	Resolution No. 25-18 .pdf

Tim Burman	Created/Initiated - 2/27/2025
Tim Burman	Approved - 2/27/2025
Shannon Balmer	Approved - 3/6/2025
Wayne Clark	Final Approval - 3/7/2025

RESOLUTION NO. 25-18

A RESOLUTION OF THE CITY COUNCIL OF PORT ORANGE FLORIDA AMENDING AND RESTATING RESOLUTION NO. 24-53 RELATING TO PROVISION OF A WAIVER OF BUILDING PERMIT FEES FOR REPAIRS RELATED TO BUILDING OR STRUCTURAL DAMAGE FROM HURRICANES IAN AND NICOLE FOR CURRENT PARTICIPANTS IN THE CITY'S FEMA HAZARD MITIGATION GRANT PROGRAM (HMGP), FLOOD MITIGATION ASSISTANCE (FMA), OR VOLUSIA COUNTY'S TRANSFORM 386 PROGRAM RELATED TO ASSISTANCE AVAILABLE FOR HURRICANES IAN, NICOLE, AND IDALIA; PROVIDING FOR A WAIVER OF BUILDING PERMIT FEES FOR REPAIRS RELATED TO BUILDINGS AND STRUCTURES SUBSTANTIALLY DAMAGED BY HURRICANES IAN AND NICOLE FOR THOSE WHO USE FUNDS OTHER THAN GRANTS FOR SAID REPAIRS; PROVIDING FOR AN INTENT AND PURPOSE OF THIS RESOLUTION; PROVIDING FOR REPEAL OF CONFLICTING RESOLUTIONS; PROVIDING FOR SEVERABILITY AND PROVIDING AN EFFECTIVE DATE.

WHEREAS**,** Hurricanes Ian and Nicole caused significant damage to properties within the geographic area of the City of Port Orange in late September and early November of 2022; and

WHEREAS**,** Section 252.38(3), *Florida Statutes,* provides authority for local governments such as the City of Port Orange to declare a local state of emergency and to take actions in emergency situations such as waiving the procedures and formalities otherwise required of political subdivisions by State law; and

WHEREAS, the permit fee waivers established by Executive Order and Resolution No.23-21 for repairs associated with damage due to Hurricanes Ian and Nicole ended on December 31, 2023; and

WHEREAS, due to the significant and widespread impacts of Hurricanes Ian and Nicole to the City of Port Orange, the recovery effort has been lengthy and ongoing, specifically for those citizens who are currently in the process of seeking recovery and assistance through the City's FEMA Hazard Mitigation Grant Program (HMGP) or City's FEMA Flood Mitigation Assistance (FMA), or Volusia County Transform 386 Program; and

WHEREAS, due to the significant and widespread impacts of Hurricanes Ian and Nicole to the City of Port Orange, the recovery effort has been lengthy and ongoing, specifically for those citizens currently funding their recovery efforts to bring buildings and structures substantially damaged by Hurricanes Ian and Nicole into compliance using sources other than a FEMA or Volusia County grant; and

WHEREAS**,** due to the protracted process of seeking recovery and assistance from the impacts of Hurricanes Ian and Nicole for those citizens currently navigating the particular requirements and timelines of the City's FEMA Hazard Mitigation Grant Program (HMGP), City's FEMA Flood Mitigation Assistance (FMA), and Volusia County's Transform 386 Program, the City desires to provide building permit waivers for said citizens in a continuing effort to assist those in their ongoing recovery efforts; and

WHEREAS, due to the protracted process of recovery from the impacts of Hurricanes Ian and Nicole for those citizens funding their recovery efforts from sources other than a FEMA or Volusia County grant, the City desires to provide building permit waivers for said citizens in a continuing effort to assist those in their ongoing recovery efforts; and

WHEREAS, in addition to the assistance available for Hurricanes Ian and Nicole, assistance as a result of Hurricane Idalia has been made available for repairs associated with damage due to Hurricanes Ian and Nicole; and

NOW, THEREFORE, BE IT RESOLVED by the City Council of the City of Port Orange, Florida, as follows:

SECTION 1. Recitals. The foregoing recitals are hereby fully incorporated herein by this reference and are deemed a material part of this Resolution.

SECTION 2. The City Council of the City of Port Orange hereby approves a waiver of permit fees for building permits for repairs associated with damage due to Hurricanes Ian and Nicole, with said waiver being limited to those citizens who are currently in the process of seeking recovery and assistance through the City's FEMA Hazard Mitigation Grant Program (HMGP) or City's FEMA Flood Mitigation Assistance (FMA), or Volusia County Transform 386 Program, said assistance being specifically available as a result of Hurricanes Ian, Nicole, and Idalia storm events; and those citizens currently funding their recovery efforts to bring buildings and structures substantially damaged by Hurricanes Ian and Nicole into compliance using sources other than a FEMA or Volusia County grant.

SECTION 3. For purposes of this resolution, the repairs may include but is not limited to building permits to elevate, demolish, or rebuild structures.

SECTION 4. All resolutions or parts of resolutions in conflict with the provisions of this Resolution are hereby repealed to the extent of such conflict.

SECTION 5. If any provision of this Resolution or the application thereof to any person or circumstance is held invalid, the invalidity shall not affect other provisions or applications of this Resolution which can be given effect without the invalid provision or application, and to this end the provisions of this Resolution are declared severable.

SECTION 6. Resolution No. 24-53 is hereby amended and superseded.

SECTION 7. This Resolution No. 25-18 shall become effective immediately upon adoption by the City Council.

_____
MAYOR SCOTT STILTNER

ATTEST:

_____
Robin L. Fenwick, MMC, City Clerk

Adopted on the day of

Reviewed and Approved: _____
Shannon K. Balmer, Senior Assistant City Attorney

CITY COUNCIL AGENDA ITEM

COUNCIL MEETING DATE 3/18/2025

SUBJECT: (D10) Resolution No. 25-20 - Budget Resolution for the Police Highwater Vehicle

DEPARTMENT: Finance

GOAL: 1 - Public Safety

RECOMMENDED MOTION: Move to approve Resolution No. 25-20.

SUMMARY: The Police Department lacked adequate resources to effect rescues of residents trapped by floodwaters during Hurricanes Ian and Milton. The current small john boat does not lend itself to being able to rapidly move residents out of danger in a timely fashion. High-water vehicles can hold multiple people and will be able to conduct rescues with a much quicker turnaround time. The purchase will make the agency self-sufficient and eliminate the need for the department to depend on outside assistance with these important rescues. The vehicle proposed for purchase is a surplus 2 1/2 ton 4x4 military cargo vehicle. The vendor will be updating and outfitting all necessary equipment specifically designed for high-water rescues and for maneuvering the vehicle in challenging conditions. Police forfeiture funds in the amount of $95,000 will be used to fund the purchase of the vehicle.

PRESENTER: Linda Truitt

ATTACHMENTS:

1.	Resolution No. 25-20	Resolution No. 25-20 .pdf

Amanda Bonin	Created/Initiated - 3/4/2025
Linda Truitt	Approved - 3/4/2025
Linda Truitt	Approved - 3/4/2025
Matthew Jones	Approved - 3/6/2025
Wayne Clark	Final Approval - 3/7/2025

RESOLUTION NO. 25-20

A RESOLUTION OF THE CITY OF PORT ORANGE, VOLUSIA COUNTY, FLORIDA, APPROPRIATING OPERATING, AND CAPITAL FUNDS FOR THE FISCAL YEAR 2024-2025 BUDGET; TO FUND PURCHASE OF HIGH-WATER VEHICLE; SETTING FORTH REVENUES AND EXPENDITURES; PROVIDING FOR SCRIVENER'S ERRORS; AND PROVIDING AN EFFECTIVE DATE.

WHEREAS, the City Council desires to budget for the transfer of $95,000 from the Police Forfeiture Trust fund balance (607) to the Police Forfeiture Trust fund capital expenditure (607) to fund the purchase of a high-water vehicle to assist in high-water rescues; and

NOW, THEREFORE, BE IT RESOLVED BY THE CITY COUNCIL OF THE CITY OF PORT ORANGE, VOLUSIA COUNTY, FLORIDA:

Section 1. The above Recitals are incorporated by reference into the body of this Resolution.

Section 2. The funds for the City operating and capital items are hereby appropriated as set forth in Composite Exhibit A, attached hereto, which reflects revenues and corresponding expenditures for the designated project.

Section 2. The budget item adopted in the preceding section shall govern the expenditures relating to such items for the City during the ensuing fiscal year effective October 1, 2024, through September 30, 2025.

Section 3. Supplemental appropriations, reductions of appropriations, emergency appropriations, and interdepartmental transfers of appropriations may be affected by the City Council and the City Manager as deemed necessary in strict compliance with the procedures specified in Chapter 2, Article VI, Division 3, Code of Ordinances, City of Port Orange, Florida.

Section 4. Scrivener's Errors. Typographical errors and other matters of a similar nature that do not affect the intent of this Resolution, as determined by the City Clerk and City Attorney, may be corrected.

Section 5. This resolution shall become effective immediately upon adoption.

_____
MAYOR SCOTT STILTNER

ATTEST:

_____
Robin Fenwick, MMC, City Clerk

Adopted on the _____day of _____

Reviewed and Approved: _____
Matthew J. Jones, City Attorney

PORT ORANGE
FLORIDA

Exhibit "A"

AMENDED BUDGET FISCAL YEAR 2024-25

Fund	Description	Adopted Resolution 24-38	Resolution 24-47	Resolution 25-03	Resolution 25-11	Resolution 25-20	Amended Budget
001	General Fund	$ 61,190,570	4,061,756	$1,671,610	$ 84,030		**$ 67,007,966**
010	National Opioid Litigation	44,687	83,445				**128,132**
011	Recreation Scholarship	22,450	-				**22,450**
019	Federal Disaster Fund	135,895	3,061,737				**3,197,632**
102	Tax Increment - Eastport	633,196	-				**633,196**
103	Tax Increment - Town Center	431,297	-				**431,297**
106	Recreational Facilities	246,700	32,363				**279,063**
109	Building & Inspections	2,649,016	-				**2,649,016**
199	Grant Special Revenue	5,134,124	-				**5,134,124**
214	Debt Services GO	901,838	-				**901,838**
217	Debt Services Eastport Tax Note	234,511	-				**234,511**
218	Debt Services Town Center Bonds	402,369	-				**402,369**
220	Debt Services Bonds	1,147,356	-				**1,147,356**
221	202X GO Bond Debt	30,000,000	-				**30,000,000**
301	Capital Projects	7,475,829	3,256,707				**10,732,536**
310	Police Impact Fee	109,785	-				**109,785**
311	Fire Impact Fee	72,660	-	27,000			**99,660**
312	Transportation Impact Fee	273,530	-				**273,530**
313	Recreation Impact Fee	212,774	-				**212,774**
317	General Capital Replacement	5,827,865	8,761,063	84,414	84,030		**14,757,372**
321	Parks Bond Capital Projects	10,000,000	-				**10,000,000**
401	Water/Sewer	31,644,162	49,190,543	69,675			**80,904,380**
403	Water/Sewer R&R	5,450,000	48,053,563	69,675			**53,573,238**
405	Water Impact Fee	679,627	-				**679,627**
410	Solid Waste	10,708,138	-				**10,708,138**
412	Stormwater Utility	5,988,199	6,618,675	(841,571)			**11,765,303**
413	Stormwater Capital	9,252,488	6,954,949	880,039			**17,087,476**
414	Drainage Bond Sinking	699,004	-				**699,004**
416	Wetland Mitigation	96,968	-				**96,968**
418	SRF Debt Service	784,846	-				**784,846**
420	Forestry	319,536	430,325				**749,861**
450	Golf Course Operating	2,619,067	-	300,000			**2,919,067**
501	Information Technology	3,833,844	25,728				**3,859,572**
503	Fleet Maintenance	1,693,226	-				**1,693,226**
504	Risk Management	2,238,409	-				**2,238,409**
505	Lease & Replacement	2,466,256	2,154,663	411,805			**5,032,724**
606	Police Benefit Trust	4,500	-				**4,500**
607	Police Forfeiture	70,000	-			95,000	**165,000**
615	Police Education Trust	10,000	-				**10,000**
625	Federal Police Forfeiture	15,000	-				**15,000**
	Grand Total:	**$ 205,719,722**	**$ 132,685,517**	**$2,672,647**	**$ 168,060**	**$ 95,000**	**$ 341,340,946**

Exhibit "A" DETAIL FOR RES. 25-20
FY25 BUDGET ADJUSTMENT REQUEST

FUND	ACCOUNT DESCRIPTION		ADJUSTMENT REQUEST	DESCRIPTION
607 POLICE FORFEITURE TRUST				
	APPROPRIATED FUND BALANCE		95,000	APPROPRIATED FUND BALANCE -
		REVENUES	95,000	
	CAPITAL OUTLAY - VEHICLE		95,000	POLICE HIGH-WATER VEHICLE
		EXPENDITURES	95,000	

REVENUES		
	95,000	
EXPENDITURES		
	95,000	-
VARIANCE		
	-	

CITY COUNCIL AGENDA ITEM

COUNCIL MEETING DATE 3/18/2025

SUBJECT: (D11) Approval to submit the proposed project for the Volusia-Flagler TPO 2025 Transportation Improvement Program Priority List

DEPARTMENT: Community Development

GOAL: 1 - Public Safety
2 - Infrastructure
3 - Quality of Life
4 - Economic Development

RECOMMENDED MOTION: Move to approve staff action to submit the application for the Crosstown Trail to the Volusia-Flagler TPO for the 2025 Priority Project ranking process for transportation and pedestrian improvements, subject to approval from FPL to apply for a Feasibility Study.

SUMMARY: Each year, the Volusia-Flagler TPO (formerly called the River to Sea Transportation Planning Organization) issues a call to local governments to submit transportation projects, such as turn lanes, sidewalks, trails, streetlights, and traffic signals, to be eligible for funding. If the projects are selected by the TPO and the City chooses to fund them, the projects will generally require a 10% local government match. The transportation projects submitted are to improve current roadways or sidewalks within the city.

Projects previously completed under this program include the Spruce Creek Road/Dunlawton Avenue intersection, Taylor Road/Devon Street signal, Dunlawton Avenue right-turn lane at Village Trail, Herbert Street sidewalk, Herbert Street right-turn lane at Clyde Morris Boulevard, Spruce Creek Trail south of Taylor Road, McDonald Road sidewalk, Victoria Gardens Boulevard sidewalk, Dunlawton Streetlighting, and North Spruce Creek Road sidewalk.

The submittal of an application to the TPO is the first step for a project to be selected for the TPO's Transportation Improvement Program (TIP) and receive funding for design and construction. Community Development staff requests City Council approval for the following application to be submitted for consideration for placement on the TPO's 2025 Project Priority List. This action does not obligate the City to fund this project, only to include it for consideration on the TPO's Priority Project List.

1. Request a Feasibility Study to evaluate a Crosstown Trail from Williamson Boulevard to Nova Road utilizing the existing FPL easement and establishing a +/-3-mile pedestrian and biking loop using the existing sidewalk/trail along Willow Run

Boulevard, Williamson Boulevard, and Clyde Morris Boulevard along with the proposed Crosstown Trail between Williamson Boulevard and Clyde Morris Boulevard.

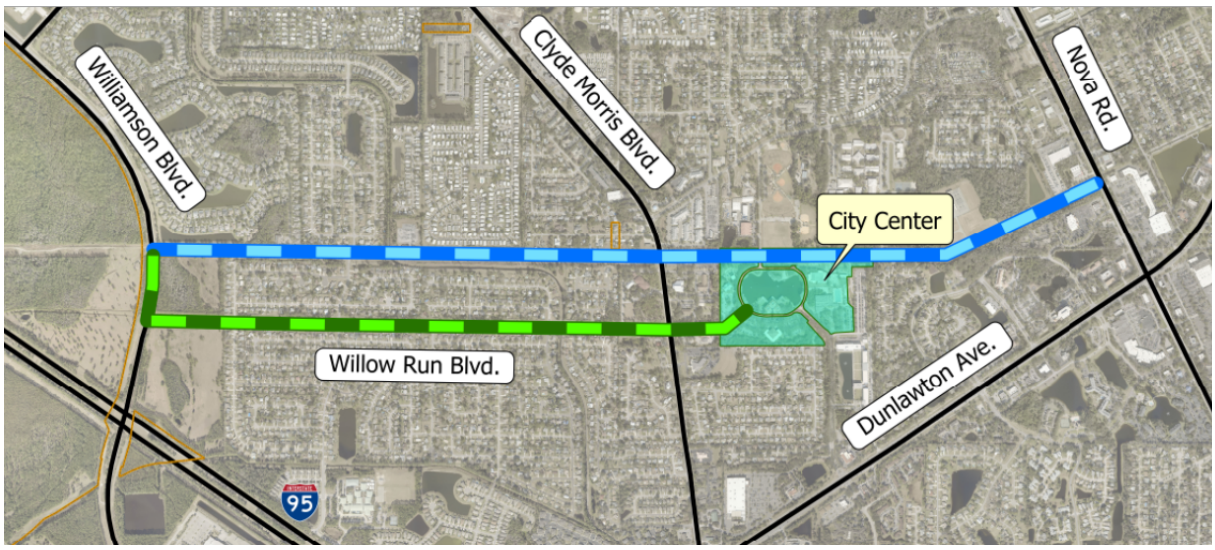

Proposed Crosstown Tail and Pedestrian and Biking Loop

If this project is selected and the City chooses to fund it, the project will require a minimum 10% local government match. With this type of project, the city pays for the project upfront and is reimbursed. If the project is accepted by the TPO, it is anticipated that the 301 Capital Projects Fund or 312 Transportation Impact Fee Fund will be the initial funding sources.

In addition to the proposed new project, the City currently has 21 projects on the TPO's 2024 Project Priority List that are in various stages of awaiting to be selected for a Feasibility Study or design. Attached is Exhibit A, which lists the current projects on the TPO's 2024 Project Priority List and their status.

PRESENTER: Tim Burman

ATTACHMENTS:

1.	2025 Exhibit A - Current List of City Projects on TPO Priority Project List	2025 Exhibit B - Current List of City Projects on TPO Priority Project List.docx

Lisa Epstein	Created/Initiated - 1/21/2025
Tim Burman	Approved - 3/4/2025
Shannon Balmer	Approved - 3/5/2025
Wayne Clark	Final Approval - 3/7/2025

Exhibit A - Current list of Port Orange projects on the TPO's 2024 Project Priority List

Traffic Operations, Safety and Local Initiatives Projects

1. Dunlawton Avenue Turn Lanes [design completed; construction to begin Summer/Fall 2025] These projects were submitted individually, and Feasibility Studies have been prepared. These projects are bundled as a single project for design and construction:
   a. Westbound Dunlawton Avenue right-turn lane at City Center Parkway;
   b. Eastbound Dunlawton Avenue right-turn lane at Clyde Morris Boulevard;
   c. Westbound Dunlawton Avenue right-turn lane at Nova Road;
   d. Extend existing left-turn lanes on Dunlawton Avenue (eastbound at Nova Road, westbound at Clyde Morris Boulevard); and
   e. Southbound Yorktowne Boulevard right-turn lane and pedestrian improvements.
2. Clyde Morris Boulevard Right Turn Lanes (eastbound at Willow Run Boulevard, eastbound at Reed Canal Road, eastbound and westbound at Madeline Avenue) [Feasibility Study completed, awaiting funding for design].
3. Eastbound and Westbound Madeline Avenue Turn Lane Improvements at Nova Road/Madeline Avenue Intersection [Feasibility Study completed] bundled with Dunlawton Avenue Eastbound Right Turn Lane at S. Swallowtail Drive [Feasibility Study completed March 2023]. Project bundle is ranked #4 on Tier B awaiting funding.
4. Dunlawton Avenue/Taylor Road Pedestrian Streetlighting [Lighting Analysis completed Feb 2023; awaiting Feasibility Study] Ranked #4 on Tier C.
5. Eastport Access Improvements on Spruce Creek Road between Dunlawton Avenue and Commonwealth Boulevard [awaiting to be selected for Feasibility Study]. Ranked #8 on Tier C.
6. Eastbound Taylor Road left-turn lane at Clyde Morris Boulevard [awaiting to be selected for a Feasibility Study]. Ranked #11 on Tier C.
7. Eastbound Taylor Road left-turn lane at Yorktowne Boulevard/Boggs Ford Road/Taylor Road [awaiting to be selected for a Feasibility Study]. Ranked #21 on Tier C.
8. Madeline Avenue Lane Widening (between Clyde Morris Boulevard and Nova Road) [awaiting to be selected for Feasibility Study]. Ranked #25 on Tier C.
9. Eastbound & westbound Herbert Street left-turn lanes at Nova Road [awaiting to be selected for a Feasibility Study] bundled with intersection improvements Nova Road at Eagle Lake Trail [awaiting to be selected for a Feasibility Study]. Project bundle is ranked #1 on Tier C.
10. Eastbound right-turn lane for northbound Ridgewood Ave (US 1) at Dunlawton Ave [awaiting to be selected for a Feasibility Study]. Ranked #2 on Tier C.
11. Williamson Blvd at Town West Blvd intersection improvements [awaiting to be selected for Feasibility Study]. Ranked #3 on Tier C.
12. Eastbound and westbound turn lane improvements on Madeline Ave at Clyde Morris Blvd [awaiting to be selected for Feasibility Study]. Ranked #13 on Tier C.
13. Port Orange Bridge Replacements (Jackson St @ Canalview Blvd, Esplanade, Trailwood Dr) [awaiting to be selected for Feasibility Study]. Ranked #31 on Tier C.

Bicycle and Pedestrian Projects

14. Port Orange Sidewalk Gaps [design completed; construction to begin Summer/Fall 2025] Sidewalk Gap Project to complete connectivity to schools, bus stops, parks, and retail areas along Clyde Morris Boulevard, Taylor Road, and Herbert Street.
15. Willow Run Boulevard sidewalk (south side), from Clyde Morris Boulevard to Harms Way [design completed; construction to begin Summer/Fall 2025].
16. Williamson-Willow Run Blvd Sidewalk (connecting Town Park subdivision to Chardonnay Drive) [design completed; construction to begin Summer/Fall 2025].
17. Port Orange Sidewalk Bundle #1 [Feasibility Studies completed, awaiting funds for design]. These projects were submitted individually, and Feasibility Studies have been prepared. These projects are bundled as a single project for design and future construction:
   a. Accessible Pedestrian Signals along the Dunlawton Avenue Corridor and Nova Road Corridor
   b. Sidewalk and Wayfinding Signage in the Down Under Area

18. Madeline Avenue (east) sidewalks, from Clyde Morris Boulevard to Nova Road, and Bruner Road [Feasibility Study completed, awaiting funding for design].
19. Madeline Avenue (west) sidewalk, from S. Williamson Boulevard to Clyde Morris Boulevard [Feasibility Study completed, awaiting funding for design].
20. Jackson Street Sidewalk, from Canal View Blvd to Madeline Ave. [Feasibility Study completed, awaiting funding for design].
21. Spruce Creek Road Sidewalk Gaps, from Oak River Drive to Commonwealth Boulevard [Feasibility Study pending]. Ranked #5 on Tier C.

CITY COUNCIL AGENDA ITEM

COUNCIL MEETING DATE 3/18/2025

SUBJECT: (D12) Approval of Economic Incentive Agreement with Commons 4075 LLC (Catfish Commons - 4075 Ridgewood Avenue)

DEPARTMENT: Community Development

GOAL: 2 - Infrastructure, 3 - Quality of Life, and 4 - Economic Development

---

RECOMMENDED MOTION: Move to approve the Economic Incentive Agreement with Commons 4075 LLC and authorize the Mayor and City Clerk to execute all necessary documents.

SUMMARY: Commons 4075 LLC. has requested financial assistance from the City through Tax Increment Financing (TIF) reimbursement related to the redevelopment of the property at 4075 Ridgewood Avenue. The new Catfish Commons multi-tenant building is in the Riverwalk District of the Port Orange Town Center Community Redevelopment Area (CRA). Incentives in the form of reimbursement from tax increment revenues are authorized under the CRA Plan. Reimbursement under TIF is based on increment revenues attributable to improvements within the project that result in public benefits. Assistance in the form of TIF is by written agreement and is subject to CRA and Council approval.

Photos of the Catfish Commons Multi-Tenant Building

According to the applicant's letter of request, Commons 4075, LLC has made a $2,595,912 investment in the City with the construction of a 6,404-square-foot multi-tenant retail building. According to the applicant, the reinvestment is in accordance with the CRA Plan to encourage positive development, job creation, and revitalization of the CRA area. The multi-tenant retail building includes four tenant bays with the following uses: coffee shop, bank, health and wellness facility, and a fourth tenant has been identified as a fast casual restaurant (building permit has not been submitted for this

use). The three tenants are anticipated to open to the public in Spring 2025 and create at least 10 new jobs.

The applicant has requested a maximum TIF reimbursement of $500,000 to be paid over approximately 11 years of the TIF revenue-sharing period. The reimbursement would be based on the applicant receiving 50% of the portion of the property tax increment revenue received by the CRA and directly attributable to the Catfish Commons development. The reimbursement funds would be used to partially offset the costs of public improvements and public benefits created by architectural/aesthetics, parking and drive aisles accessible to the public, lighting, drainage, utilities, landscaping, exterior signs, traffic control devices, turn lanes, and other public benefits created by the development.

The requested Economic Incentive Agreement (EIA) for the Tax Increment Financing (TIF) reimbursement is similar to the EIAs that were approved for the Atlantic Marine project (520 Dunlawton Avenue) and Dunlawton Village project (415 Dunlawton Avenue), located within the CRA.

PRESENTER: Tim Burman

ATTACHMENTS:

1.	Economic Incentive Agreement	Economic Incentive Agreement .pdf
2.	TIF - EIA Letter 3-3-25 - final	Clark - EIC Letter 3-3-25 - final.pdf

Tim Burman	Created/Initiated - 2/27/2025
Tim Burman	Approved - 2/28/2025
Linda Truitt	Approved - 3/3/2025
Shannon Balmer	Approved - 3/10/2025
Wayne Clark	Final Approval - 3/13/2025

ECONOMIC DEVELOPMENT INCENTIVE AGREEMENT

BY AND BETWEEN

PORT ORANGE TOWN CENTER
COMMUNITY REDEVELOPMENT AGENCY
and
CITY OF PORT ORANGE, FLORIDA,

and

Commons 4075, LLC, a Florida limited liability company

Dated as of _____, 2025

ECONOMIC DEVELOPMENT INCENTIVE AGREEMENT

This Economic Development Incentive Agreement (the "Incentive Agreement"), dated as of _____, 2025, is entered into by and between the **Community Redevelopment Agency for Port Orange Town Center**, a special purpose unit of local government organized and existing under Chapter 163, Part III, the laws of the State of Florida (the "Agency") and the **City of Port Orange,** Florida, a municipal corporation (the "City") and **Commons 4075, LLC, a Florida limited liability company** (the "Owner").

W I T N E S S E T H:

WHEREAS, for purposes of this Incentive Agreement, the Definitions have been set forth in Exhibit "A" attached hereto and incorporated herein by this reference; and

WHEREAS, the Owner is the owner of certain land located within the jurisdiction of the Agency more specifically described in Exhibit "B" attached hereto and incorporated herein by this reference (hereinafter the "Property"); and

WHEREAS, the City authorized the issuance of bonds consistent with the Community Redevelopment Plan for Redevelopment Areas for Port Orange Town Center; and

WHEREAS, the Owner has requested certain economic development incentives related to the development of the Property; and

WHEREAS, the Agency is authorized pursuant to Chapter 163, Part III, Florida Statutes (the "Act") and the Port Orange Town Center Redevelopment Plan, dated December 1, 1998, as amended by an Amendment to Redevelopment Plan, pursuant to Ordinance No. 2007-10 dated March 20, 2007; as further amended by an Amendment to Redevelopment Plan, pursuant to Ordinance No. 2014-22 dated November 11, 2014; as further amended by Amendment to Redevelopment Plan, pursuant to Ordinance No. 2016-15, dated September 20, 2016; and as further amended by Amendment to Redevelopment Plan, pursuant to Ordinance No. 2021-25, dated September 21, 2021, as amended, from time to time ("Redevelopment Plan"), to utilize economic incentives and to expend tax increment funds in order to promote and encourage certain types of development activity within the boundaries of the Port Orange Town Center Redevelopment Area; and

WHEREAS, the Agency, finding it to be in the best interest of the Agency and the health, safety and welfare of the citizens of the City of Port Orange, Florida (the "City"), intends to provide certain economic incentives to the Owner in order to facilitate the development of the Property with the expectation that the Agency's involvement will encourage and accelerate the timing of the development, thus preserving the property values in the Port Orange Town Center Redevelopment Area, enhancing and expanding economic development and activity within Port Orange Town Center Redevelopment Area in order to provide a stronger, more balanced, and stable economy, enhance and preserve employment opportunities for residents, promote and further the redevelopment of the Port Orange Town Center Redevelopment Area and assist in the funding of certain public improvements as described herein (collectively, the "Public Benefits"); and

WHEREAS, the mixed use nature of the proposed development of the Property (the "Project") will reduce reliance on the private automobile as a means of transportation and allow for the efficient and economic provision of services and utilities; and

WHEREAS, the Florida legislature has found that government sponsored public-private partnerships and the promotion and support, including financial assistance, of economic development activities is in the public interest and achieves a public benefit; and

WHEREAS, the Agency, City and the Owner wish to reduce to writing the understanding of the economic incentives provided by the Agency and the Owner's obligations with respect to the development of the Project.

NOW, THEREFORE, in consideration of the premises and of the mutual covenants herein contained, and such other good and valuable consideration the receipt of which is hereby acknowledged, the parties agree as follows:

Section 1. **Incorporation of Preamble.** The Preamble of this agreement is true and correct and incorporated herein by this reference as if fully set forth below.

Section 2. **Capitalized Terms**. Capitalized terms in this Agreement have the meanings set forth in Exhibit A or otherwise defined herein.

Section 3. **Effectiveness of Agreement.** This Agreement will become effective upon execution hereof.

Section 4. **Term.** Unless earlier terminated pursuant to Section 11.C hereof, the term of this Agreement ("Term") will commence on the Effective Date and will continue through and including the expiration of the Revenue Sharing Period. Nothing herein will limit the ability of the Parties to enter into future amendments to this Agreement that have the effect of extending the Term. After expiration of the Term, this Agreement will be deemed terminated and of no further force and effect; provided, however, such termination will not affect any obligation of any Party which arises under this Agreement during the Term but is not fully performed as of the end of the Term.

Section 5. **Nature of and Authority for Agreement.** This Agreement constitutes an economic and business development incentive agreement between the Parties consistent with the economic development objectives of the Agency and the business development objective of the Owner, and does not constitute the creation of a joint venture, partnership or any other form of business enterprise between the Parties. This Agreement contemplates reimbursement to the Owner from the Community Redevelopment Agency for Town Center Trust Fund of significant costs to be incurred by the Owner to construct public improvements needed for the Project, including but not limited to water, sewer, parking, or roadway improvements and stormwater retention/detention and to otherwise promote Public Benefits. The Agency and the City have determined that payment of the amounts set forth herein furthers a critical public interest of the Agency to attract and retain retail and residential development in the Community Redevelopment Area for Port Orange Town Center.

Section 6. **Agreement to Develop Property**. The Owner agrees to construct the improvements constituting the development of the Property having an assessed value of not less than $ 2,295,847.00.

Section 7. **Relationship to City Code**. The express terms and provisions of each element of the Development Agreement, and any subsequently approved amendment to any element of the Development Agreement, are subject to all provisions of City Code and the City Code will apply to the Property in the same manner as it applies to all other properties located within City.

A. Zoning. Zoning and development of the Property will be governed by the terms and conditions of the Development Agreement and City Code.

B. Application of City Code. All procedures for processing of Development Applications, and all substantive, procedural, engineering, architectural design and development standards and other technical requirements and standards set forth in the City Code will, notwithstanding any provision of this Agreement, govern and control with respect to zoning, subdivision, site development, and other matters affecting development of the Property, the Public Improvements and obligations with respect thereto. Procedures, standards and requirements associated with Public Improvements and assurance of completion obligations will be governed by the City's site plan approval and development order. Unless otherwise agreed, the Owner will be obligated to pay to the City all nominal application and permit fees related to its development of the Property, including but not limited to application and permit fees for sign permits, impact fees, Building Permits, construction documents, construction inspections, right-of-way permits, amendments to approved Development Plans, Grading, Erosion, Sediment Control ("GESC") permits, or other applications or permits required by other service providers or agencies having jurisdiction over the Property.

Section 8. **Tax Increment Rebate.** Subject to payment of the Senior Obligations as provided in Section 8.F. hereof, the Agency hereby agrees to provide an economic incentive to the Owner in the form of a rebate of fifty percent (50%) of the portion of the property tax increment revenue received by the Agency and directly attributable to the Property, provided, however, that the total amount so shared shall be limited to the lesser of (i) the cost of the Public Improvements and Public Benefits expended by Owner or (ii) the Revenue Sharing Cap Amount (the "Total Tax Increment Rebate").

A. Calculation Base. For purposes of calculating the property tax increment revenue for the entire Property, it is agreed that the base year valuation of the Property shall be the taxable assessed value of the Property as shown on the records of the Volusia County Tax Appraiser on December 31, 2023 ("TIR Calculation Base Year").

B. Rebate Amount. The tax increment rebate will be calculated in each year during the Revenue Sharing Period and paid on or before July 30th. The Tax Increment Rebate shall be calculated each year as one half of the incremental tax revenue received by the Agency from the Tax Collector for such year attributable to the increase, if any, of the taxable value of the Property over the TIR Calculation Base Year.

Each year during the Term of this Agreement the Agency will provide the Owner with notice of the amount of the estimated Tax Increment Rebate for such year by December 31. The notice shall be delivered to the Owner no later than December 31st of each year. The actual Tax Increment Rebate will be based on actual tax increment revenue received with respect to the Property and may vary from the estimated amount.

The millage rate applied to determine the contribution to the Community Redevelopment Agency for Town Center Trust Fund is based upon the millage rates of the taxing authorities which contribute to the Community Redevelopment Agency for Town Center Trust Fund, including the City, and is subject to change as provided by law.

The Owner may designate third parties to receive all or any portion of the Total Tax Increment Rebate provided that the Owner provides written notice of such designation to the Agency. Any such payment to a third party shall be subject to all the terms and conditions hereof.

Tax Increment payments from the Agency shall be payable solely from assets in the Redevelopment Tax Fund and shall not be a general obligation or debt of the Agency or the City.

C. Compliance Conditions. The Agency's obligation to provide the tax increment rebate is contingent upon the Owner's compliance with the following provisions of this Section 8.C.

i. The Project shall be developed in accordance with the Development Plan and the Development Agreement, as amended from time to time and the Development Order issued by the City. The Owner may seek to amend the Development Agreement at any time.

ii. The Project shall be constructed by a Florida licensed general contractor substantially in accordance with the plans for the project as approved by the City in connection with the issuance of the building permits for its construction.

iii. The development of the Property is commenced and completed in accordance with the descriptions and timeframes set out in Section 7.

D. Funding Disbursements; Reporting and Disbursement. Within thirty (30) days after each June 30 of each year of the Revenue Sharing Period, the Agency will remit to the Owner a lump sum payment (a "Funding Disbursement") in the amount required by Section 8.B. Unless the Owner otherwise directs the Agency in writing, each such Funding Disbursement will be remitted to the Owner at the address set forth in Section 23.

E. Audits. The Owner will have all rights available at law or in equity to audit or contest, at its sole expense, the Agency's computation of the Tax Increment Rebate and Funding Disbursements. Audits may be requested by the Owner in writing from time to time, but will not occur more than once annually at the time the Agency subjects its records to audits required by state law, and the scope of any such audit may include any prior period so designated by the Owner in such request. Audits will be performed by an independent auditor using generally accepted governmental accounting principles. The costs of any such audit will be paid by the Owner. The foregoing audit rights and the Agency obligations will survive termination of

the Revenue Sharing Period and expiration of the Term for the longer of twelve (12) months after the date on which the Agency is required to subject its records to audits required by state law for the last year of the Revenue Sharing Period or the Parties' full performance of their respective obligations hereunder with respect to any audit request delivered to Agency prior to termination of the Revenue Sharing Period.

F. Senior Obligations. The Agency and City have previously incurred the Senior Obligations, which shall be paid from tax increment revenues prior to the use of tax increment revenues to make economic incentive payments to the Owner. In each year, Funding Disbursements shall be made only to the extent tax increment revenues attributable to the Property are not required to pay the Senior Obligations. The Agency shall keep a record of any Funding Disbursements not made due to the limitation set forth in the preceding sentence ("Deferred Funding Disbursements"). Deferred Funding Disbursements shall be paid in subsequent years as and when tax increment revenues attributable to the Property are received by the Agency which are not required to pay the Senior Obligations (i.e., from the Agency's un-shared 50% portion). Any Deferred Funding Disbursements not paid by the end of the Revenue Sharing Period shall be cancelled and not thereafter paid.

Section 9. Use of Funding Disbursement Revenues by the Owner. Funding Disbursements distributed to the Owner will be applied only for a public purpose which will advance (or which has advanced) the redevelopment of the Community Redevelopment Area for Port Orange Town Center and is permitted by the Port Orange Town Center Redevelopment Plan, including, without limitation, Public Improvements and Public Benefits. For purposes of this Agreement, "public purpose" will include, without limitation, the acquisition, design, construction, installation, erection, repair or maintenance of Public Improvements and other activities that promote Public Benefits, which for purposes of this Agreement include but are not limited to:

A. Exterior signage and devices that provide for or permit or enhance public way-finding and direction, building and business identification to the public, traffic control, and parking management within the Property, the Development and/or proximate areas.

B. Parking structures, parking lots, drive aisles, streets, and ways within the Property, the Development and/or proximate areas provided that such locations are routinely accessible to and available for use by the general public. Excepting the public trail and park, such areas shall at all times remain the private property of the Owner and its successors and assigns.

C. Lighting fixtures, power lines, transformers, and other lighting-related improvements to illuminate parking areas, sidewalks, drive aisles, loading areas, and other locations within the Property, the Development and/or proximate areas which are routinely accessible to the general public and which equipment will aid public safety and security.

D. Drainage retention and detention ponds and holding areas, culverts, pipes, inlets, gates, grates, swales, retaining walls, and water quality facilities within the Property, the Development and/or proximate areas which improvements provide for the management of surface water and the controlled retention or release in order to reduce adverse impacts upon and damage to public streets, public intersections, public infrastructure and adjacent private property.

E. Utilities (e.g., water, sewer, gas, electric, communications) and utilities extensions serving the Property, Development and/or proximate areas to the extent that the costs of such utilities improvements are the obligation of the Owner and are not within the responsibility or obligation of the utility service provider; and for purposes of clarification, costs incurred by the Owner for any such utilities improvements prior to the dedication of such utilities improvements to a utility provider (e.g., design and construction costs) or payments or reimbursements made to a utility provider for design and construction costs shall be eligible for Funding Disbursements.

F. Landscaping, including plant materials and landscape-related features (including any artwork) located along the perimeter of the Property, the Development or proximate areas or within the parking areas or other areas within the Property, the Development or proximate areas which are routinely accessible to the general public.

G. Physical improvements and amenities intended to serve the general public while upon the Property, the Development and/or proximate areas, including but not limited to sidewalks, crosswalks, bicycle paths, bicycle racks and storage areas, benches and seating, trash cans, rest areas, overpasses, and street medians to provide pedestrian safe zones for crossing of roadways and drive aisles.

H. Traffic control devices including traffic lights and crosswalk signals within the Property, the Development and/or proximate areas.

I. Improvements to meet local, state, or federal accessibility standards such as the Americans with Disabilities Act and to aid access for handicapped persons to and within the portions and areas of the Property, the Development and/or proximate areas which are intended for public access.

J. Acceleration lanes, deceleration lanes, turn lanes, and lane striping widening or modification intended to benefit the Property, the Development and/or proximate areas.

K. Any Public Improvements identified in the Development Order or SIA for the Property, the Development and/or proximate areas.

L. Any other public-related improvements, whether on-site or off-site, if such improvements are for a public purpose and determined by Agency to provide a public benefit, including but not limited to promoting Public Benefits, and/or advance the health, safety and welfare of the community or public convenience.

M. Any other improvements, property, equipment, materials, services and/or undertakings directly or indirectly related to the promotion of the Public Benefits.

N. Any easement granted by Owner to the City/Agency for a public purpose or for a Public Benefit (other than easements granted as required by the Development Plan).

The actual costs and expenses incurred by the Owner directly or indirectly related to any of the foregoing plus five percent (5%) per annum from the date the expense was incurred by the Owner shall, without limitation, be reimbursable from Funding Disbursement revenues as a

"public purpose" within the meaning of Section 9 of this Agreement; provided, however, notwithstanding anything to the contrary contained in this Agreement, the Agency and the Owner acknowledge and agree that the Property and the Project shall at all times remain the private property of the Owner, subject to a public access deed and use easement rights.

The Owner shall submit to Agency such evidence of payment of such costs as Agency reasonably determines is necessary to verify expenditures for public purposes defined above and to verify that the costs and expenses for which reimbursement is sought were obtained or provided at a reasonable market price consistent with the Public Improvements and Public Benefits provided. The Agency shall have the right to require an audit of the expenditures and the procurement or bidding process by which contracts and subcontracts were entered into; the Owner shall pay the cost of any such audit.

Section 10. Certification of Use of Funding Disbursement Revenues by the Owner. The Owner may apply revenues from Funding Disbursements toward payment or reimbursement of its costs and expenses in accordance with Section 9 above (whether incurred and/or paid prior or subsequent to commencement of the Revenue Sharing Period) up to the Revenue Cap Amount. Not later than 60 days prior to the due date of Agency's initial Funding Disbursement, the Owner will provide Agency with a certification of the actual amount of costs and expenses incurred in accordance with Section 9 above. The reasonable costs and expenses incurred by the Owner in the preparation of the initial certification and any supplemental certification contemplated by this Section 9 will be reimbursable from Funding Disbursement revenues as a "public purpose" within the meaning of Section 10 of this Agreement.

Section 11. Defaults and Remedies.

A. Default by a Party. A breach or default by the either Party under this Agreement ("Default") will be defined as such Party's failure to fulfill or perform any express material obligation of that Party stated in this Agreement.

B. Notices of Default. In the event of a Default by either Party under this Agreement, the non-Defaulting Party will deliver written notice to the Defaulting Party of the Default, at the address specified in Section 24, and the Defaulting Party will have thirty (30) days from and after receipt of the notice to cure the default without liability for the Default. If the Default is not of a type which can be cured within such thirty (30) day period and the Defaulting Party gives written notice to the non-Defaulting Party within such thirty (30) day period that it is actively and diligently pursuing a cure, the Defaulting Party will have a reasonable period of time given the nature of the Default following the end of the thirty (30) day period to cure the Default, provided that the Defaulting Party is at all times within the additional time period actively and diligently pursuing the cure and such additional period shall not exceed 120 days.

C. Remedies. If an Owner Default under this Agreement is not cured as described above, City and Agency may enforce the Owner's obligations hereunder by an action for injunction, specific performance, and/or contract damages, or at its election may terminate this Agreement, following which this Agreement will be of no further force and effect and neither Party will have any further obligations to the other hereunder, except that the Owner will remain obligated to pay to City and Agency any amounts due and owing to City and Agency as provided in Section 23. If the Agency or City Default under this Agreement is not cured as

described above, the Owner will have the right to enforce Agency's or City's obligations hereunder by an action for injunction, specific performance, and/or contract damages.

Section 12. Representations. In addition to the other representations, warranties and covenants made by the Parties herein, the Parties make the following representations, warranties and covenants to each other, and may be held liable for any loss suffered as a consequence of any misrepresentation or breach under this Section 12.

A. Full Authority. Each Party has the full right, power and authority to enter into, perform and observe this Agreement.

B. Other Instruments. Unless otherwise specified herein, neither the execution of this Agreement, the consummation of the transactions contemplated hereunder, nor the fulfillment of or the compliance with the terms and conditions of this Agreement by each Party will conflict with, violate or result in a breach of any terms, conditions, or provisions of, or constitute a default under, or result in the imposition of any prohibited lien, charge, or encumbrance of any nature under any agreement, instrument, indenture, or any judgment, order, law or decree to which either Party hereto is a party or by which either Party is bound.

C. Covenants. Each Party will keep and perform all of the covenants and agreements of such Party contained herein.

Section 13. Costs. The Owner shall pay any expenses incident to the preparation of this Agreement and the performance of its obligations hereunder, including but not limited to: (i) the cost of the preparation, execution, delivery, filing and recording, as the case may be, of this Agreement and all other agreements, instruments, certificates and documents required in connection with the consummation of the transactions contemplated hereby; and (ii) the reasonable fees and disbursements of counsel and any financial advisor for the Agency and the City.

Section 14. Severability. Any provision of this Incentive Agreement held by a court of competent jurisdiction to be invalid, illegal or unenforceable shall be severable and shall not be construed to render the remainder to be invalid, illegal or unenforceable.

Section 15. Effective Date and Term. This Incentive Agreement shall become effective and commence on the date of its approval by the City Council and the Community Redevelopment Agency for Port Orange Town Center and upon execution by the City, Agency and the Owner, subject to the termination, severability and survival provisions set forth herein.

Section 16. Termination. This Agreement shall terminate upon the occurrence of any of the following events:

A. The end of the Term, as provided in Section 4.

B. Termination of this Agreement by the Owner pursuant to Section 7.A. hereof, or termination of the Agreement by its Agency pursuant to Section 11.C hereof.

Section 17. Relationship. This Incentive Agreement does not evidence the creation of, nor shall it be construed as creating, a partnership or joint venture among the Agency, the

City and the Owner. No party can create any obligation or responsibility on behalf of the others or bind the others in any manner. Each party is acting for its own account, and it has made its own independent decisions to enter into this Incentive Agreement and as to whether the same is appropriate or proper for it based upon its own judgment and upon advice from such advisers as it has deemed necessary. Each party acknowledges that none of the other parties hereto is acting as a fiduciary for or an adviser to it in respect of this Incentive Agreement or any responsibility or obligation contemplated herein. The Owner further represents and acknowledges that no one was paid a fee, commission, gift or other consideration by the Owner as an inducement to entering into this Incentive Agreement.

Section 18. **Personal Liability**. No provision of this Incentive Agreement is intended, nor shall any be construed, as a covenant of any official (either elected or appointed), director, employee or agent of the Agency and the City in an individual capacity and neither shall any such individuals be subject to personal liability by reason of any covenant or obligation of the Agency hereunder.

Section 19. **Applicable Law and Venue**. This Incentive Agreement shall be governed by and construed in accordance with the laws of the State of Florida. Any action, in equity or law, with respect to this Incentive Agreement must be brought and heard in the Circuit Court of the Seventh Judicial Court in and for Volusia County, Florida.

Section 20. **Assignment**. It is acknowledged that the Owner, as the fee simple owner of the Property, is free to convey title (fee simple, leasehold or otherwise) to third parties of all or portions of the Property. Such third parties shall acquire no right or interest in this Agreement unless expressly granted in a written instrument executed by the Owner. In connection a conveyance to a third party, the Owner (as to the Owner's interest) shall have the right to assign all or any portion of its interests in this Agreement, and the assignee of any interests in this Agreement shall also have the right to assign such interests to another party, provided that: (i) the Owner's interest hereunder shall only be assignable in whole and not in part, and (ii) the assignee must assume in writing the responsibilities, obligations and duties associated with the interests being assigned by the assignor and which may arise after the effective date of the assignment.

Upon the assignee's assumption of such responsibilities, obligations and duties, the assignor shall be relieved of same. The assignor of the Owner's interests in this Incentive Agreement shall provide notice to the Agency of such assignment within fifteen (15) days of the effective date of the assignment. The assignment instrument must include the street address, phone number and facsimile number of the assignee. Such contact information shall be used by the parties under the notices provision below.

Section 21. **Amendment**. This Incentive Agreement may not be amended, unless evidenced in writing and executed by all parties hereto.

Section 22. **Attorneys' Fees.** In the event of any litigation between the Parties hereto concerning the subject matter hereof, the substantially prevailing Party in such litigation will be entitled to receive from the non-prevailing Party, and will be awarded, in addition to the amount of any judgment or other award entered therein, all reasonable costs and expenses, including attorney fees, incurred by the substantially prevailing Party in such litigation, appeal or post judgment collection proceedings.

Section 23. **Notices**. Notices shall be deemed to have been duly given if sent by facsimile or hand-delivered or mailed, first class, postage prepaid, or by certified or registered mail (return receipt requested) to the following addresses:

To the Agency: Community Redevelopment Agency for Port Orange Town Center and City of Port Orange
1000 City Center Circle
Port Orange, Florida 32129
Attn: City Manager
Telephone: 386-506-5501
Facsimile: 386-756-5208

To the Owner: Commons 4075, LLC
Attn: Brendan Galbreath
4190 Halifax Drive
Port Orange, Florida 32127

With a copy to:

The parties hereby agree to notify each other in writing of any change of address.

Section 24. **Captions**. The captions and headings of sections or paragraphs used in this Incentive Agreement are for convenient reference only and shall not limit, define or otherwise affect the substance or construction of provisions of this Agreement.

Section 25. **Third Parties.** The interests of the Owner in this Agreement are personal to the Owner, and although the Owner's interests may be expressly assigned in accordance with the provisions of Section 20, they do not run with the land. The Agreement has been entered into for the benefit of the parties and there are no third party beneficiaries.

Unless expressly granted in a written instrument executed by the Owner, third parties acquiring any indicia of ownership in the Property shall not, by virtue of such acquisition or otherwise, acquire or receive any right, title or interest whatsoever in any of the monetary payments or benefits to arise or be made by the Agency under this Incentive Agreement including, but not limited to, the tax increment rebate.

Section 26. **No Delegation of Police Power.** The Owner's shall not pledge the credit of the City nor make the City a guarantor of payment of surety for any contract, debt, or, judgment, lien, or any form of indebtedness. The parties agree that this Agreement does not nor shall it be construed as a delegation of any of the City's authority or police powers to the Owner.

Section 27. **Compliance Monitoring.** The Owner agrees that City control and monitoring of the economic incentives granted hereunder is necessary to insure that the Owners' implementation of the municipal purposes declared by the Agency herein.

Section 28. Third Party Challenges. In the event of any Legal Challenge by a third party to the validity or enforceability of any provision of this Agreement or any constituent element of the Development Plan, the Parties will cooperate in the defense of such challenge and will bear their own costs and attorneys' fees. Unless otherwise provided herein, during the pendency of any such Legal Challenge, the Parties will abide by and carry out all of the terms of this Agreement, unless otherwise ordered by a court of competent jurisdiction. If any Legal Challenge successfully voids, enjoins, or otherwise invalidates any constituent element of the Development Plan, or any portion thereof, or this Agreement, the Parties will cooperate to cure the legal defect and to process to completion such instruments as may be necessary or desirable to most fully implement the intent and purpose of this Agreement.

Section 29. Entire Agreement. This Agreement constitutes the entire agreement between the parties hereto with respect to the subject matter hereof. Any representations or statements heretofore made with respect to such subject matter, whether verbal or written, are merged herein, provided, however, that this Agreement shall not affect the validity of the Development Agreement executed simultaneously herewith or any other written agreement between the parties relating to road impact fees assessed in connection with development of the Property.

Section 30. Counterparts; Copies. This Agreement may be executed in any number of counterparts, each of which when so executed and delivered shall be deemed an original, and all of which shall together constitute one and the same instrument. Additionally, signed telecopies/facsimiles shall have the same force and effect as a signed original, and, in lieu of an original, any party hereto may use a photocopy of this Agreement in any action or proceeding brought to enforce or interpret any of the provisions contained herein.

[THIS SPACE INTENTIONALLY LEFT BLANK]

IN WITNESS WHEREOF, the Agency has duly approved this Agreement and have authorized its execution and delivery by the respective signing officers all as of the date first above written.

COMMUNITY REDEVELOPMENT AGENCY for PORT ORANGE TOWN CENTER

_____
Jonathan Foley, Chairman

Attest:

_____
Robin L. Fenwick, MMC, Agency Clerk

(SEAL)

STATE OF FLORIDA
COUNTY OF VOLUSIA

The foregoing instrument was acknowledged before me by means of [XX] physical presence or [___] online notarization this _____ day of _____, 2025, by Jonathan Foley, as the Chairman and Robin L. Fenwick, MMC, as Agency Clerk, both of the Community Redevelopment Agency for Port Orange Town Center, on behalf of the Agency. They are personally known to me or [___] has produced _____ as identification.

[Notary Stamp]

_____
Signature of Notary Public
Printed Name: _____
Serial No. (if any): _____
Commission Expires: _____

IN WITNESS WHEREOF, the City has duly approved this Agreement and have authorized its execution and delivery by the respective signing officers all as of the date first above written.

CITY OF PORT ORANGE, FLORIDA

By: _____
Scott Stiltner, Mayor

Attest:

_____
Robin L. Fenwick, MMC, City Clerk

(SEAL)

STATE OF FLORIDA
COUNTY OF VOLUSIA
The foregoing instrument was acknowledged before me by means of [XX] physical presence or [___] online notarization this _____ day of _____, 2025, by Scott Stiltner, as the Mayor and Robin L. Fenwick, MMC, as City Clerk, both of the City of Port Orange, Florida, on behalf of the City. They are personally known to me or [___] has produced _____ as identification.

[Notary Stamp]

_____
Signature of Notary Public
Printed Name: _____
Serial No. (if any): _____
Commission Expires: _____

IN WITNESS WHEREOF, the Owner has duly approved this Agreement and have authorized its execution and delivery by the respective signing officers all as of the date first above written.

Commons 4075, LLC, a Florida Limited Liability Company

_____ By:_____

Printed Name:_____ Brendan Galbreath, Member

_____ (SEAL)

Printed Name:_____

STATE OF FLORIDA
COUNTY OF _____

The foregoing instrument was acknowledged before me by means of [XX] physical presence or [___] online notarization this _____ day of _____, 2025, by Brendan Galbreath, as Member of Commons 4075, LLC a Florida Limited Liability Company on behalf of said entity, who is personally known to me or has produced _____ as identification.

[Notary Stamp]

_____
Signature of Notary Public
Printed Name: _____
Serial No. (if any): _____
Commission Expires: _____

Exhibit "A"

Definitions

For purposes of the foregoing Agreement, the following terms and references will have the following meanings:

1. **"Agency"** has the meaning set forth in the initial paragraph of this Agreement.

2. **"Agreement"** means this Incentive Agreement and any Exhibits attached hereto, all of which are incorporated herein by this reference, as amended from time to time in accordance with its terms.

3. **"Building Permit"** means any site development approved by the city, and any building permit, occupancy permit, signage permit, fence permit, electrical permit, grading permit, or similar permit required by City Code and/or City's development or building code, electrical code, plumbing code, fire code, or similar code, as in effect from time to time.

4. **"Building Codes"** means City's adopted building code, electrical code, plumbing code, fire code, and other similar codes, as in effect from time to time.

5. **"City"** has the meaning set forth in the preambles of this Agreement.

6. **"City Code"** means the Municipal Code of City of Port Orange, Florida (including the Land Development Code and the Building Code and any similar separately codified regulations), as in effect from time to time (or, where the Agreement expressly states, at a particular time stated).

7. **"City Council"** means City Council of the City.

8. **"Default"** has the meaning set forth in Section 11 of this Agreement.

9. **"Development Application"** means the substantially complete application submitted to City by the Owner for any development, subdivision, zoning, site plan or similar land use approval relating to development of any property within the Property, including, without limitation, an application for any zoning or re-zoning, site plan, subdivision plat, Building Permit, construction permit or other form of development permit, or any amendment to or modification of any of the foregoing.

10. **"Development Agreement"** means the Re-stated Master Development Agreement Catfish Commons Planned Commercial Development together with the Conceptual Development Plan and other exhibits attached thereto of record in Official Records Book 8278, Page 3843, Public Records, Volusia County, Florida between the City and Owner, as amended from time to time.

11. **"Development Plan"** means **"Project"** and the Re-stated Master Development Agreement Catfish Commons Planned Commercial Development together with the Conceptual

Development Plan and other exhibits attached thereto of record in Official Records Book 8278, Page 3843, Public Records, Volusia County, Florida between the City and the Owner, as amended from time to time.

12. "Development Order" means any order granting, with or without conditions, approval of an application for development, including any subdivision, site plan, rezoning, special exception, and variance.

13. "Effective Date" means the date on which this Agreement is executed by both Parties and as set forth in Section 3.

14. "Exhibits" means the following Exhibits to this Agreement, all of which are incorporated by reference into and made a part of this Agreement:

Exhibit A — Definitions

Exhibit B —Legal Description of the Property

15. "Funding Disbursement" has the meaning set forth in Section 8. D.

16. "Legal Challenge" means either of the following: (1) any third party commences any legal proceeding that directly or indirectly challenges this Agreement, the Project SIA, and/or any of the Agency's or City's resolutions or ordinances approving or ratifying this Agreement or the Project, or (2) any third party submits a petition for a referendum seeking to reverse or nullify any such ordinances.

17. "Owner" has the meaning set forth in the initial paragraph of this Agreement.

18. "Party(ies)" means, individually or collectively as applicable, the Owner, the Agency and the City.

18. "Project" means approved development plans evidenced by Site Construction Permit and in accordance with the Re-stated Master Development Agreement Catfish Commons Planned Commercial Development together with the Conceptual Development Plan and other exhibits attached thereto of record in Official Records Book 8278, Page 3843, Public Records, Volusia County, Florida, approved by City Council, as amended from time to time, together with any Development Order issued by the City in connection with the construction of the Public Improvements, as amended from time to time.

19. "Property" means the real property that is legally described in Exhibit B.

20. "Public Improvements" means, as more fully discussed in Section 9 of the Agreement, any and all on-site and/or off-site improvements or property, including but not limited to roadways, water lines, sewer lines, storm water facilities, open space, landscaping, traffic control devices, sidewalks, transportation improvements, signage, parking areas or structures and similar or other infrastructure and related or other improvements or property, to be designed, constructed, improved and/or acquired, which will be dedicated for public use or which will be

generally accessible to the public, or which otherwise serves a public purpose, in accordance with the Project SIA, if any, and the Agreement.

21. "Revenue Sharing Cap Amount" means the total aggregate principal amount of **FIVE HUNDRED and NO/100 dollars ($500,000)**, which amount is the maximum amount of cumulative Funding Disbursements available under the terms and conditions of this Agreement.

22. "Revenue Sharing Period" means the period commencing the year subsequent to the issuance of the Certificate of Completion and that which the tax valuation will initiate a Tax Increment Revenue increase as a result of completion of the Project and the period terminating on the earlier of: (i) the date on which the Owner has received Funding Disbursements cumulatively equaling the Revenue Sharing Cap Amount; (ii) December 31, 2036, (iii) the expiration of the Agency or (iv) the Developer's failure to timely commence and timely complete all improvements.

23. "Senior Obligations" means the total debt payments allocable to the Property for the following:

(a) The principal and interest payments with respect to the $5,230,000.00 of the City of Port Orange, Florida, Town Center Community Redevelopment Agency Tax Increment Revenue Bonds, Series 2007 (together with any refunding or replacement thereof, the "TIR Bonds"); and

(b) The principal and interest payments with respect to $500,185.50 of the City of Port Orange, Florida Capital Improvement Revenue Bonds, Series 2014 (together with any refunding or replacement thereof, the "Capital Bonds") allocable to the Property and computed as follows:

The portion of the TIR Bonds and Capital Bonds allocable to the Property shall be the annual debt payments for the TIR Bonds and Capital Bonds multiplied by a fraction, the numerator [1.09] of which is the Property acreage and the denominator [43.53] of which is the aggregate acreage of the Riverwalk Special Character District as defined in the Port Orange Town Center Redevelopment Plan.

24. "SIA" has the meaning set forth in Section 7.B of this Agreement.

25. "Term" has the meaning set forth in Section 4.

26. "TIR Calculation Base Year" has the meaning set forth in Section 8.A.

Exhibit "B"

Legal Description of the Property

PART OF LOTS 1, 2, AND 3, BLOCK 'A', WILSON'S SUBDIVISION OF PORT ORANGE, AS RECORDED IN MAP BOOK 1, PAGE 154, PUBLIC RECORDS OF VOLUSIA COUNTY, FLORIDA, AND BEING MORE PARTICULARLY DESCRIBED AS FOLLOWS:
FROM A REFERENCE POINT, BEING THE INTERSECTION OF THE SOUTHERLY LINE OF BLOCK 'A', WILSON'S SUBDIVISION OF PORT ORANGE WITH THE EASTERLY LINE OF RIDGEWOOD AVENUE (U.S. HIGHWAY #1), A 100 FOOT STREET AS PRESENTLY ESTABLISHED, RUN THENCE NORTH 26 DEGREES 27 MINUTES 47 SECONDS WEST ALONG SAID EASTERLY LINE, A DISTANCE OF 35.10 FEET; THENCE CONTINUE ALONG SAID EASTERLY LINE NORTH 21 DEGREES 01 MINUTES 08 SECONDS WEST, A DISTANCE OF 38.68 FEET TO A POINT ON A CURVE CONCAVE EASTERLY; THENCE ALONG SAID CURVE TO THE RIGHT, HAVING A RADIUS OF 126.51 FEET, A CENTRAL ANGLE OF 00 DEGREES 29 MINUTES 26 SECONDS AND A CHORD BEARING OF NORTH 24 DEGREES 14 MINUTES 04 SECONDS WEST, AN ARC LENGTH OF 1.08 FEET TO THE POINT OF BEGINNING; THENCE CONTINUE ALONG SAID CURVE TO THE RIGHT AND ALONG THE SOUTHERLY LINE OF THE PORT ORANGE BRIDGE APPROACH, HAVING A RADIUS OF 126.51 FEET, A CENTRAL ANGLE OF 81 DEGREES 29 MINUTES 04 SECONDS AND A CHORD BEARING OF NORTH 16 DEGREES 52 MINUTES 36 SECONDS EAST, AN ARC LENGTH OF 179.92 FEET TO A POINT; THENCE NORTH 57 DEGREES 37 MINUTES 07 SECONDS EAST, A DISTANCE OF 123.70 FEET; THENCE SOUTH 19 DEGREES 32 MINUTES 00 SECONDS EAST, FOR A DISTANCE OF 70.94 FEET; THENCE NORTH 77 DEGREES 11 MINUTES 31 SECONDS EAST, A DISTANCE OF 36.78 FEET; THENCE SOUTH 24 DEGREES 46 MINUTES 56 SECONDS EAST, A DISTANCE OF 136.60 FEET TO THE SOUTHERLY LINE OF BLOCK 'A'; THENCE SOUTH 65 DEGREES 15 MINUTES 18 SECONDS WEST, ALONG SAID SOUTHERLY LINE A DISTANCE OF 98.66 FEET; THENCE NORTH 23 DEGREES 06 MINUTES 28 SECONDS WEST, A DISTANCE OF 75.0 FEET; THENCE SOUTH 65 DEGREES 15 MINUTES 18 SECONDS WEST, AND PARALLEL TO THE SOUTHERLY LINE OF BLOCK "A", 165.40 FEET TO THE POINT OF BEGINNING.

Together with:

PART OF LOT 1, BLOCK 'A', WILSON'S SUBDIVISION OF PORT ORANGE, AS RECORDED IN MAP BOOK 1, PAGE 154, PUBLIC RECORDS OF VOLUSIA COUNTY, FLORIDA, AND BEING MORE PARTICULARLY DESCRIBED AS FOLLOWS: BEGINNING AT THE INTERSECTION OF THE SOUTHERLY LINE OF BLOCK 'A', WILSON'S SUBDIVISION OF PORT ORANGE WITH THE EASTERLY LINE OF RIDGEWOOD AVENUE (U.S. HIGHWAY #1), A 100 FOOT STREET AS PRESENTLY ESTABLISHED, RUN THENCE NORTH 26 DEGREES 27 MINUTES 47 SECONDS WEST ALONG SAID EASTERLY LINE A DISTANCE OF 35.10 FEET; THENCE CONTINUE ALONG SAID EASTERLY LINE NORTH 21 DEGREES 01 MINUTES 08 SECONDS WEST A DISTANCE OF 38.68 FEET TO A POINT ON A CURVE CONCAVE EASTERLY; THENCE ALONG SAID CURVE TO THE RIGHT, HAVING A RADIUS OF 126.51 FEET, A CENTRAL ANGLE OF 00 DEGREES 29 MINUTES 26 SECONDS AND A CHORD BEARING OF NORTH 24 DEGREES 14 MINUTES 04 SECONDS WEST, AN ARC LENGTH OF 1.08 FEET TO A POINT; THENCE NORTH 65 DEGREES 15 MINUTES 18 SECONDS EAST, AND PARALLEL TO THE SOUTHERLY LINE: OF BLOCK 'A', A DISTANCE OF 165.40 FEET; THENCE SOUTH 23 DEGREES 06 MINUTES 28 SECONDS EAST, A DISTANCE OF 75.00 FEET TO THE SOUTHERLY LINE OF BLOCK 'A'; THENCE SOUTH 65 DEGREES 15 MINUTES 18 SECONDS WEST ALONG SAID SOUTHERLY LINE A DISTANCE OF 164.73 FEET TO THE POINT OF BEGINNING.

PARKER MYNCHENBERG & ASSOCIATES, INC.

1729 Ridgewood Avenue
Holly Hill, Florida 32117
(386) 677-6891
FAX (386) 677-2114
E-Mail: info@parkermynchenberg.com

March 3, 2025

Mr. Wayne Clark
City Manager
City of Port Orange
1000 City Center Circle
Port Orange, FL 32129

Re: CATFISH COMMONS – 4075 Ridgewood Avenue
Economic Incentive Program – TIF Reimbursement Request

Dear Mr. Clark,

Please find enclosed the following in connection with the above-referenced project:

1. One (1) copy of the Certified Cost Estimate.

Commons 4075 LLC is currently in the process of investing a total of $2,595,912.70 in the City of Port Orange Town Center Community Redevelopment Area. The first phase included the development of a 6,404 sq. ft. multi-tenant office building and related site improvement. The first phase of redevelopment was completed in November 2024. Construction of the interior improvements have been ongoing, and three of the four tenant spaces are now occupied and open to the public. The 4th tenant has signed a lease and is expected to be open in late summer.

The managing member, Brendan Galbreth of Commons 4075, LLC has had a presence in the Port Orange community for decades; he also owns and operates the Aunt Catfish Restaurant and other surrounding businesses. Their investment in the CRA will include the creation of quality office/retail space which has exhibited high demand in the first phase of redevelopment; so much so that all of the newly constructed retail units have all been leased.

The current tax value of the property based on the 2023 assessment is $881,548.00. With the millage rate of 17.511 the current tax yield is $16,867.12 for 2023. Based on the overall value of this redevelopment plan, the new taxable amount will be $2,295,847.00 and at the current millage rate will result in a tax yield of approximately $43,927.64, or a $27,060.52 increase over the current 2023 assessment.

Commons 4075, LLC was inspired to reinvest in the Port Orange Town Center CRA due in part to the Economic Incentive Program adopted by the CRA and the City. With the intent of the Program to incentivize positive development, job creation and revitalization of the Town Center, Mr. Galbreth's actions are well within the overall intent and fundamental objectives of the Economic Incentive Program. Catfish Commons has already brought three new businesses with over 20 employees to the redevelopment area. It is anticipated that an additional 20 more jobs will be created with the opening of the 4th tenant's business.

Commons 4075, LLC's capital expenditure of $2,295,847.00 towards public improvements and public benefits which include without limitation, the acquisition, design, construction, installation, erection, repair or maintenance. The property owner is requesting a maximum TIF reimbursement of $500,000 to be paid over approximately 11 years of the TIF revenue-sharing period. The requested reimbursement would be based on the applicant receiving 50% of the portion of the property tax increment revenue received by the CRA and directly attributable to the Catfish Commons development. The reimbursements made by the CRA through the Economic Incentive Program will help offset a portion of the cost associated with

the public improvements and public benefits created by Commons 4075, LLC and its redevelopment plan.

With this letter I have attached a certified Engineer's Estimate of the cost associated with this redevelopment project. On behalf of Commons 4075, LLC, I respectfully request your consideration, as well as the consideration of the Council and CRA to provide the financial incentives granted through the Economic Incentive Program.

If any additional information is required, please contact me at 677-6891.

Sincerely,

Steven R. Buswell, P.E., R.L.A.

SRB/kh

Cc: Ms. Penelope Cruz
Mr. Tim Burman

CITY COUNCIL AGENDA ITEM

COUNCIL MEETING DATE 3/18/2025

SUBJECT: (H17) First Reading - Ordinance No. 2025-09 - Comprehensive Plan Future Land Use Map Amendment/4009 & 4084 Halifax Drive (Case No. CPAM-24-0003)

DEPARTMENT: Community Development

GOAL: 3 - Quality of Life

RECOMMENDED MOTION: Move to approve Ordinance 2025-09

SUMMARY: Planning Commission Action (2/27/25): Recommended Approval (7-0)

The property owners are requesting to change the Future Land Use (FLU) map designation for ±1.2 acres at 4009 Halifax Drive (Aunt Catfish's on the River Restaurant) and 4084 Halifax Drive (former Maloney Funeral Home) from *Commercial* to *Mixed-Use Center*. The proposed FLU amendment is being processed concurrently with the restatement of the Master Development Agreement (MDA) for the Catfish Commons Planned Commercial Development (PCD) to add 4084 Halifax Drive into the PCD and establish the framework to redevelop 4009 and 4084 Halifax Drive. The two subject properties are shown in pink, and the current boundary of the Catfish Commons PCD is shown in blue.

If the FLU Amendment and restatement of the MDA for the Catfish Commons PCD are approved, the property owners plan to redevelop the property at 4084 Halifax Drive as a mixed-use building with commercial uses on the first floor and up to eight residential units above, a 12-slip marina, and allow the addition of two residential units above the existing Aunt Catfish's on the River restaurant at 4009 Halifax Drive.

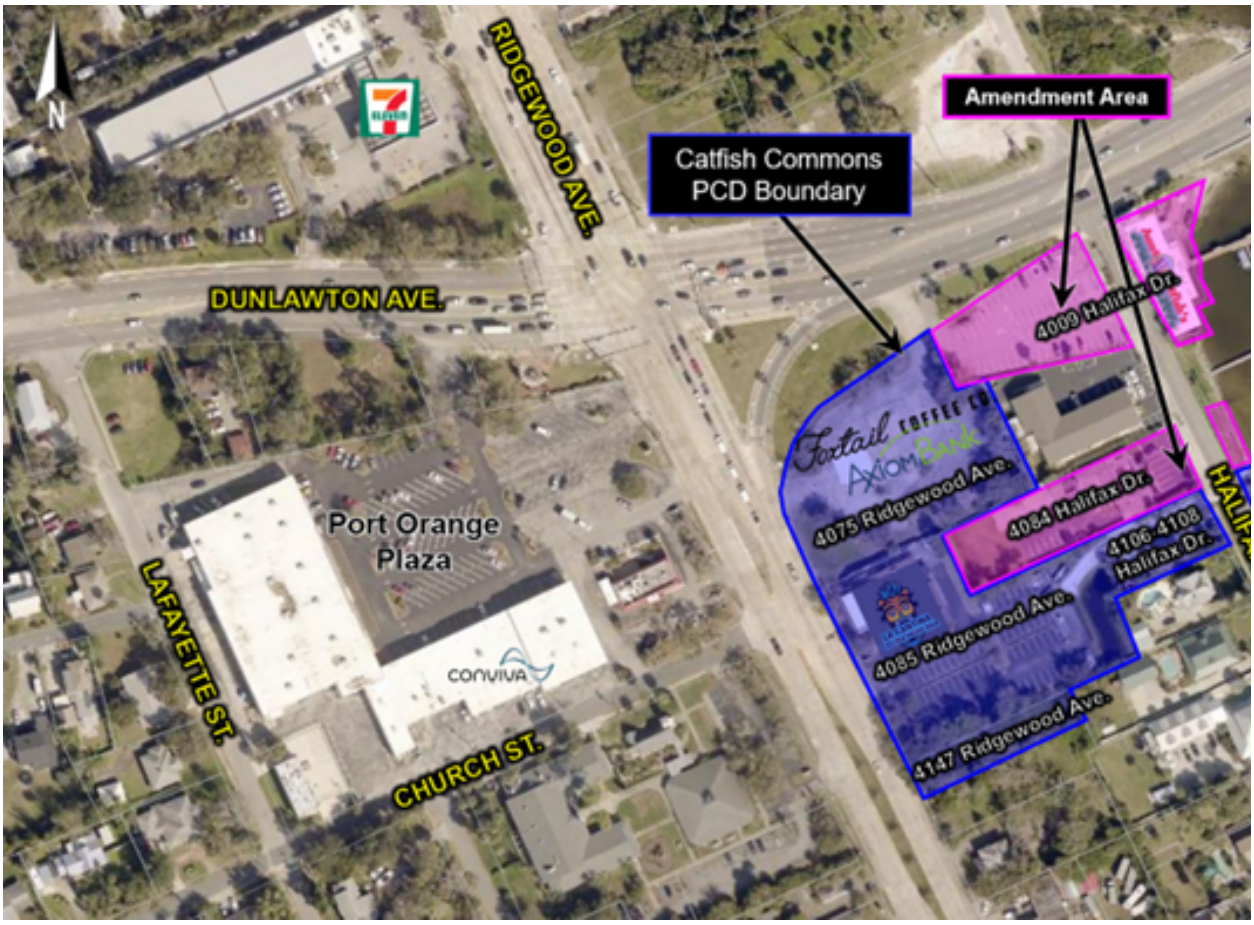

Location Map of 4009 Halifax Drive and 4084 Halifax Drive

The current *Commercial* FLU designation on the subject properties does not allow a mixture of non-residential and residential uses. Therefore, the property owners are requesting to change the FLU designation for the subject properties to *Mixed-UseCenter* to allow the inclusion of residential units within the PCD while maintaining commercial uses on the subject properties. The *Mixed-Use Center* designation is an alternative to single-use categories, such as residential or commercial, and allows a variety of land uses, which may include a combination or mixture of commercial, office, service, residential, and institutional development, and is focused around a point of high activity, such as an intersection of collector or higher-classified roads. The proposed *Mixed-Use Center* FLU designation is compatible with the adjacent properties and supports the City's redevelopment goals for the Port Orange Town Center Community Redevelopment Area (CRA) and Ridgewood Corridor Plan.

The proposed FLU amendment results in a net increase in the number of residential units and non-residential square footage. Based on the theoretical maximum analysis, all public facilities have adequate capacity to accommodate the proposed amendment. There is existing infrastructure, such as water, sewer, and roads, to support the redevelopment of these properties.

As with all development, the specific site development proposal for the subject properties will be subject to concurrency regulations at the time of development, requiring adequate public facilities to be provided or to mitigate their impacts. If

approved, the proposed *Mixed-Use Center* FLU designation will serve as an alternative to the existing single-use, commercial category and promote the redevelopment of properties that have access to existing infrastructure such as water, sewer, and roads.

The Staff Report is attached for more information.

PRESENTER: Tim Burman

ATTACHMENTS:

1.	Ordinance No. 2025-09 with exhibits	Ordinance No. 2025-09 with exhibits.pdf
2.	STAFF REPORT	STAFF REPORT .pdf
3.	Business Impact Estimate - ORD 2025-09- CPAM-24-0003	Business Impact Estimate - ORD 2025-09-CPAM-24-0003.docx

Penelope Cruz	Created/Initiated - 2/28/2025
Tim Burman	Approved - 2/28/2025
Shannon Balmer	Approved - 3/6/2025
Wayne Clark	Final Approval - 3/7/2025

ORDINANCE NO. 2025-09

AN ORDINANCE OF THE CITY OF PORT ORANGE, VOLUSIA COUNTY, FLORIDA, RELATING TO COMPREHENSIVE PLANNING; AMENDING THE FUTURE LAND USE MAP OF THE COMPREHENSIVE PLAN; AMENDING THE FUTURE LAND USE (FLU) DESIGNATION FOR ±1.2 ACRES FROM COMMERCIAL TO MIXED-USE CENTER; AUTHORIZE TRANSMITTAL TO REQUIRED AGENCIES; PROVIDING FOR CONFLICTING ORDINANCES, SEVERABILITY AND AN EFFECTIVE DATE.

WHEREAS, after careful review and a public hearing, the Planning Commission, sitting as the Local Planning Agency, has forwarded a recommendation to the City Council regarding this proposed amendment to the Comprehensive Plan for the City of Port Orange; and

WHEREAS, the proposed amendment to the Comprehensive Plan directly relates to small scale development activities as provided in Section 163.3187(1)(c), Florida Statutes; and

WHEREAS, the City Council of the City of Port Orange has provided an opportunity to receive comments and proposals from the general public and held at least one public hearing with regard to the proposed amendment to the Comprehensive Plan; and

WHEREAS, the amendment to the Comprehensive Plan shall be submitted to the Volusia Growth Management Commission for a determination of consistency in accordance with Section 202.3 of the Charter of Volusia County, Florida; and

WHEREAS, the City Council hereby declares that the purpose and intent of the proposed amendment to the Comprehensive Plan is to guide future growth and development; encourage the most appropriate use of land, water, and other resources, consistent with the public interest; promote and protect the public health, safety, comfort, good order, appearance, convenience, aesthetics, and general welfare; prevent the overcrowding of land and avoid undue concentration of population; provide adequate and efficient transportation, water, sewage, drainage, fire protection, parks, recreational facilities, housing, and other services, facilities and resources; and conserve and protect natural resources within the City, while protecting private property rights; and

NOW, THEREFORE, BE IT ORDAINED BY THE CITY COUNCIL OF THE CITY OF PORT ORANGE, VOLUSIA COUNTY, FLORIDA:

Section 1. For purposes herein, the term “Comprehensive Plan”, shall mean the Comprehensive Plan for the City of Port Orange, entitled “Port Orange Comprehensive Plan 2022-2045”, consisting of eleven (11) elements, including Future Land Use; Transportation; Housing; Public Facilities; Public Schools Facilities; Coastal Zone Management; Conservation; Recreation and Open Space; Intergovernmental Coordination; Capital Improvements; Property Rights; and Appendix 1 – Map Series, all as adopted by Ordinance Nos. 2024-04, 2024-12, 2024-25, and this ordinance.

Section 2. The Future Land Use Map, Map 1.4, within Appendix 1- Map Series, of the Comprehensive Plan is hereby amended for ±1.2 acres from Commercial to Mixed-Use Center as shown on the Map depicted in **Exhibit “A”**, attached hereto and by reference made a part hereof.

Section 3. All ordinances or parts of ordinances in conflict with the provisions of this ordinance are hereby repealed to the extent of such conflict.

Section 4. If any provision of this ordinance or the application thereof to any person or circumstance is held invalid, the invalidity shall not affect other provisions or applications of this ordinance which can be given effect without the invalid provision or application, and to this end the provisions of this ordinance are declared severable.

Section 5. This ordinance shall become effective immediately upon adoption.

_____
MAYOR SCOTT STILTNER

ATTEST:

_____
Robin L. Fenwick, MMC, City Clerk

Passed on first reading on the day of

Passed and adopted on second and final reading on the day of

Reviewed and Approved: _____
Shannon K. Balmer, Senior Assistant City Attorney

EXHIBIT "A"

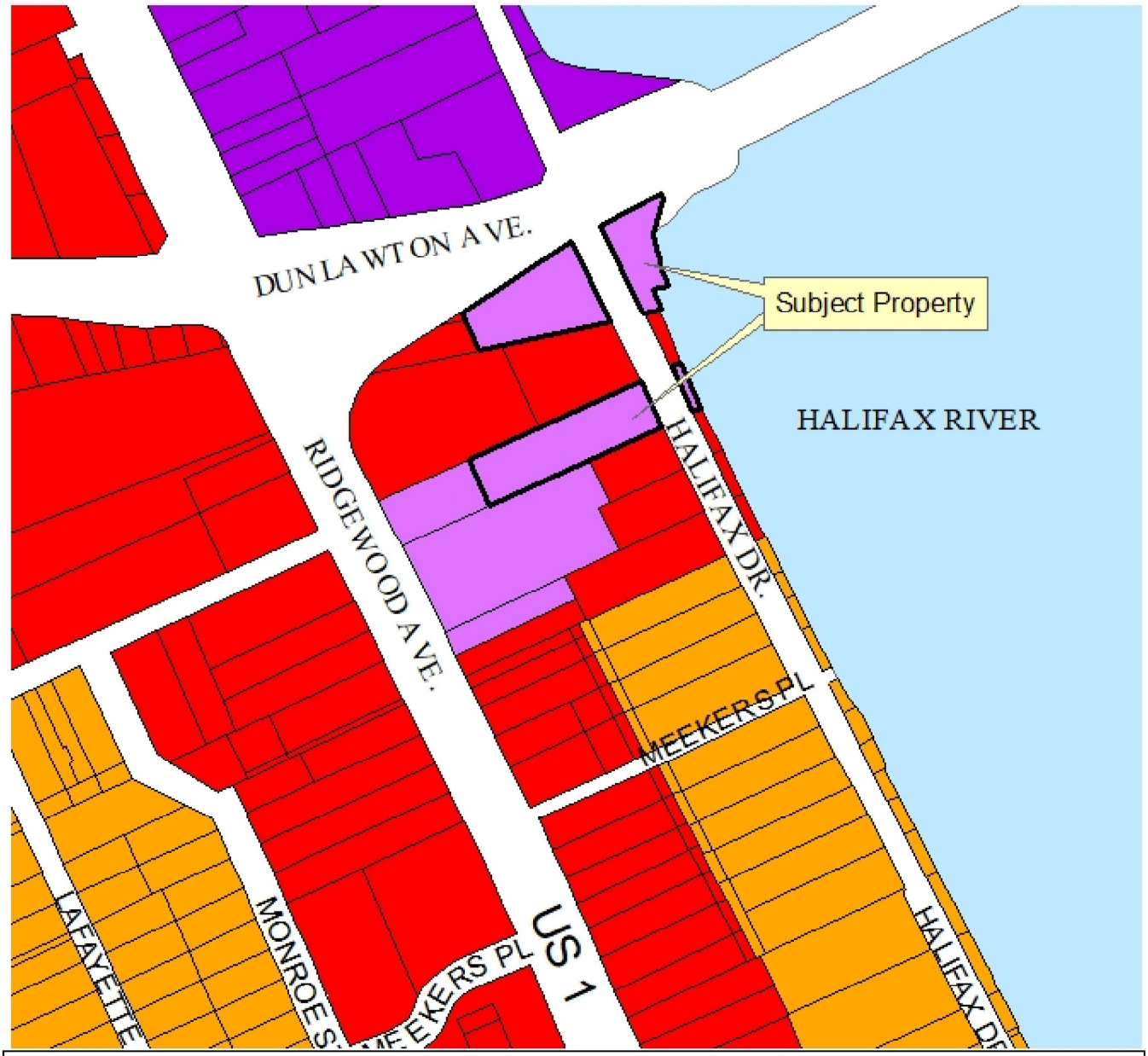

Legend

- Commercial
- Planned Community
- Mixed-Use Center
- Urban Medium Density Residential

CITY OF PORT ORANGE 1867 FLORIDA

Future Land Use

CITY OF PORT ORANGE

DEPARTMENT OF COMMUNITY DEVELOPMENT

N W E S

STAFF REPORT

Small-Scale Comprehensive Plan Future Land Use Map Amendment / 4009 and 4084 Halifax Drive

CASE NO. CPAM-24-0003

REQUEST:	Amend the Comprehensive Plan Future Land Use (FLU) map to change the FLU designation for ±1.2 acres from *Commercial* to *Mixed-Use Center.*
LOCATION:	4009 and 4084 Halifax Drive
OWNERS/APPLICANTS:	Brendan and Shannon Galbreath and Halifax 4084 LLC
STAFF CONTACT:	Penelope Cruz, Planning Manager (386) 506-5671
STAFF RECOMMENDATION:	Approval
PLANNING COMMISSION:	Recommended Approval 7-0 (February 27, 2025)
CITY COUNCIL:	March 18, 2025

INTRODUCTION

The property owners are requesting to change the Future Land Use (FLU) map designation for ±1.2 acres at 4009 (Aunt Catfish Restaurant) and 4084 (former Maloney Funeral Home) Halifax Drive from *Commercial* to *Mixed-Use Center*. The proposed FLU amendment is being processed concurrently with the restatement of the Master Development Agreement (MDA) for the Catfish Commons Planned Commercial Development (PCD) to add 4084 Halifax Drive into the PCD and establish the framework to redevelop 4009 and 4084 Halifax Drive. The two subject properties are shown in purple, and the current boundary of the Catfish Commons PCD is shown in blue in Figure 1.

Figure 1. Location Map

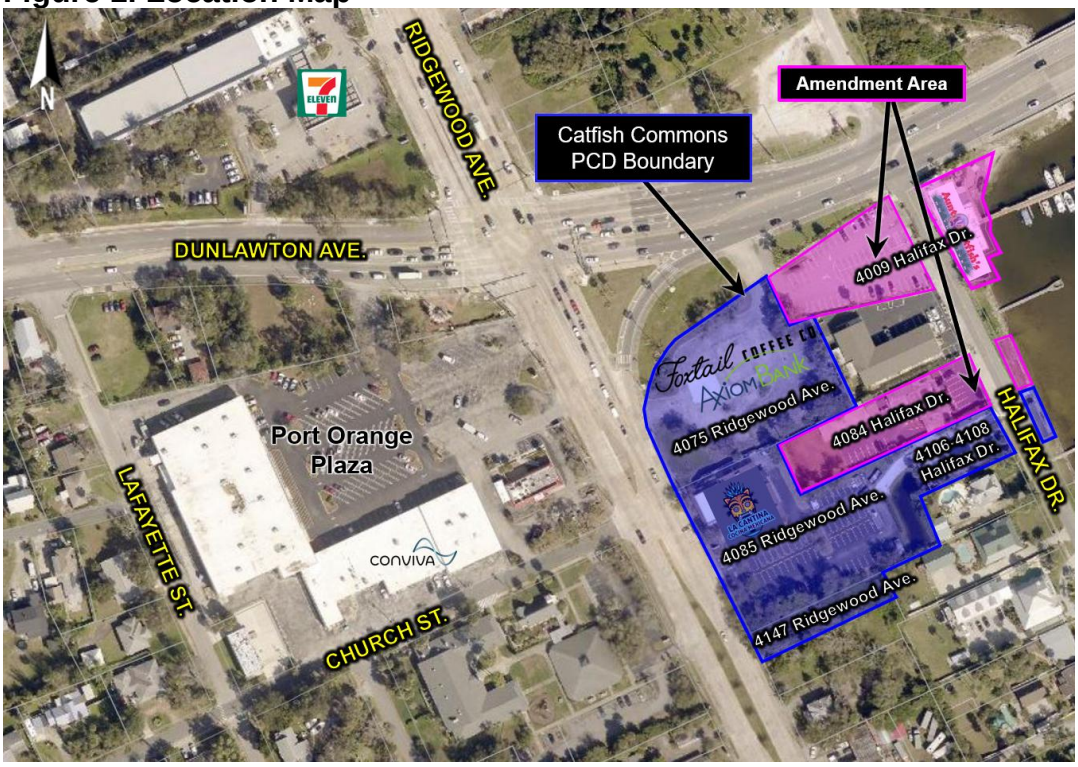

PROPOSED AMENDMENT

The request to change the FLU designation for the 1.2 acres from *Commercial* to *Mixed-Use Center* is to allow the inclusion of residential units within the PCD while maintaining the commercial uses on the subject properties. The *Mixed-Use Center* designation is an alternative to single-use categories, such as residential or commercial. The mixed-use designation allows a variety of land uses, which may include a combination or mixture of commercial, office, service, residential, and institutional development, and is focused around a point of high activity, such as an intersection of collector or higher-classified roads.

According to the applicants, the request to change the FLU designation of the subject properties to the *Mixed-Use Center* designation allows a combination of commercial, office, and residential uses, which is impossible with the current FLU designations that only allow single-use categories.

Concurrent with the FLU amendment, the property owners are requesting to restate the Catfish Commons MDA to provide the framework to redevelop the property at 4084 Halifax Drive as a mixed-use building with commercial uses on the first floor and up to eight residential units above and a 12-slip marina and allow the addition of two residential units above the existing Aunt Catfish's restaurant at 4009 Halifax Drive.

PROPERTY OVERVIEW

The following section will examine the proposed amendment and its impacts. The properties are located along the Ridgewood Corridor and within the Port Orange Town Center Redevelopment Area (CRA). The surrounding existing land uses, Future Land Use designations, and Zoning classifications are identified in Tables 1 and 2.

Table 1. 4009 Halifax Drive Surrounding Land Uses, Future Land Use Designation and Zoning

Direction	Existing Land Use	FLU Designation	Zoning District
North	Dunlawton Avenue	*N/A*	N/A
South	Multi-Family Residential	*Commercial*	Ridgewood Development (RD)
East	Halifax River	*N/A*	N/A
West	Commercial	*Commercial*	Planned Commercial Development (Catfish Commons PCD)

Table 2. 4084 Halifax Drive Surrounding Land Uses, Future Land Use Designation and Zoning

Direction	Existing Land Use	FLU Designation	Zoning District
North	Commercial and Multi-family Residential	*Commercial*	Planned Commercial Development (Catfish Commons PCD) and Ridgewood Development (RD)
South	Single-family Residential & Commercial	*Commercial & Mixed-Use Center*	Planned Commercial Development (Catfish Commons PCD)
East	Halifax River	*N/A*	N/A
West	Commercial	*Mixed-Use Center*	Planned Commercial Development (Catfish Commons PCD)

The current FLU designation for the adjacent properties and proposed FLU designation for the subject properties are identified in Figure 2.

Figure 2. Current and Proposed FLU Map

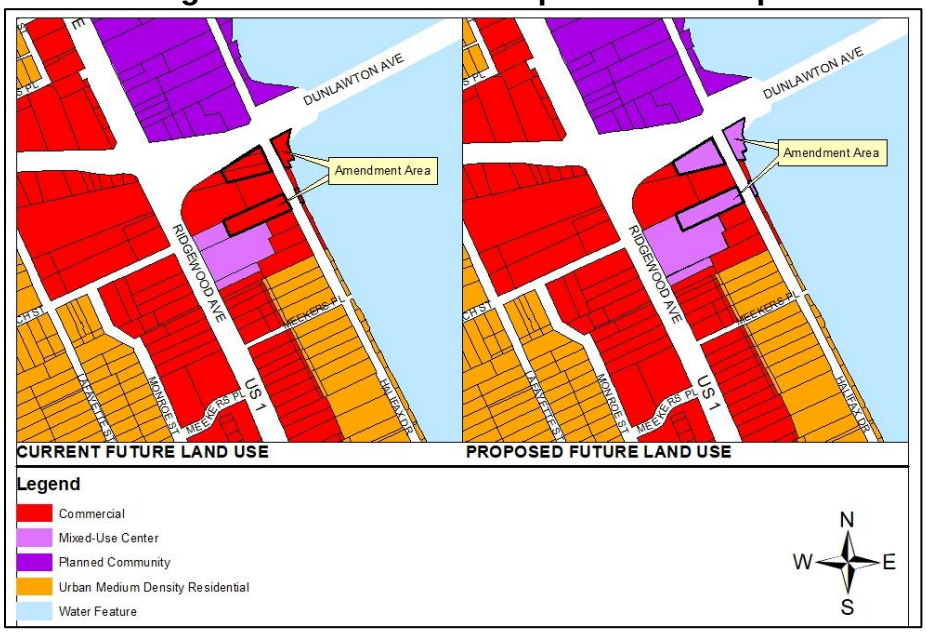

The current zoning classifications for the adjacent properties and the proposed zoning classification for the subject properties are identified in Figure 3. The applicants submitted a PCD rezoning application that is being concurrently reviewed with the proposed FLU amendment to rezone the property at 4084 Halifax Drive from Community Commercial (CC) to Planned Commercial Development (PCD) (Case No. PRZA-24-0008). The property at 4009 Halifax Drive is already zoned PCD and in the Catfish Commons PCD.

Figure 3. Current and Proposed Zoning Map

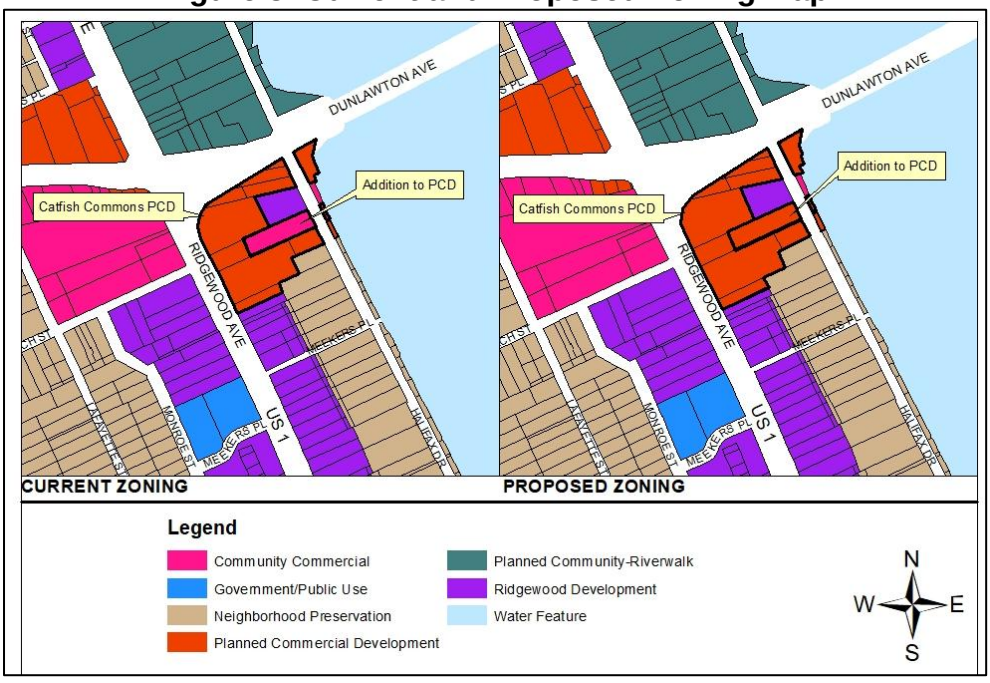

The following table identifies the acreage for the current and proposed FLU designations by acreage (Table 3).

Table 3. Current & Proposed Future Land Uses – Acreage by Category

FLU Designation	Current FLU (acres)	Proposed FLU (acres)	Net Change in FLU (acres)
Commercial	1.2	0	-1.2
Mixed-Use Center	0	1.2	+1.2
Total Acreage	1.2	1.2	0

The following table identifies the maximum allowable density/intensity (Table 4) of current adopted and proposed FLU designations. The maximum residential density allowed in *Mixed-Use Center* FLU designation is 16 dwelling units per gross acre. The maximum Floor Area Ratio (FAR) for non-residential uses allowed in this category is 1.5. The allowable distribution of uses within the *Mixed-Use Center* FLU designation is within the following ranges, with the cumulative mixture of percentages equaling 100%:

- commercial (not including office) 50%-90%
- office 10% - 90%
- residential 0% - 50%
- institutional 0% - 35%

If approved, the proposed FLU designation will serve as an alternative to the single-use commercial node and promote the redevelopment of an existing commercial property within the Port Orange Town Center CRA, with access to existing infrastructure such as water, sewer, and roads.

Table 4. Current & Proposed Future Land Uses – Density/Intensity by Category

	Current FLU	Proposed FLU	Net Change in FLU
	[Theoretical Maximum Density (units)/Intensity (sq. ft.)]		
Commercial (0.5 FAR for Community Node)	26,136 sq. ft. commercial	0	-26,136 sq. ft. commercial
Scenario #1: *Mixed-Use Center 50% Residential (16 units/acre) /50% Commercial (1.5 FAR*)*	0 units 0 sq. ft.	10 units 39,204 sq. ft. commercial	+10 units +39,204 sq. ft. commercial
Scenario #2: *Mixed-Use Center 90% Commercial (1.5 FAR)/10% office (1.5 FAR)*	0 sq. ft.	70,567 sq. ft. commercial 7,841 sq. ft. office	+70,567 sq. ft. commercial +7,841 sq. ft. office
TOTAL	Scenario #1: 0 units 26,136 sq. ft.	Scenario #1: 10 units 39,204 sq. ft.	Scenario #1: +10 units +13,068 sq. ft.
	Scenario #2**:** 26,136 sq. ft.	Scenario #2: 78,408 sq. ft.	Scenario #2: +52,272 sq. ft.

* FAR - The Floor Area Ratio (FAR) is the ratio of a building's total floor area (gross floor area) to the size of land it is built upon.

INFRASTRUCTURE IMPACT ASSESSMENT

In accordance with standard practice from the Florida Department of Economic Opportunity (DEO) and other review agencies, an impact comparison analysis of the proposed amendment has been completed based on the theoretical maximum development potential under the current future land use designation versus the designation proposed. The following seven public facilities and services were examined:

1. Transportation
2. Sanitary Sewer
3. Potable Water
4. Solid Waste
5. Stormwater Drainage
6. Recreation
7. Schools

Table 5. Impact Analysis (Theoretical Maximum)

Development Variable	Current Land Use	Proposed Land Use		Net Change	
	100% Commercial (0.5 FAR)	Scenario 1 (50% Residential/ 50% Commercial)	Scenario 2 (90% Commercial/ 10% Office)	Scenario 1 (50% Residential/ 50% Commercial)	Scenario 2 (90% Commercial/ 10% Office)
Residential Units	0	10	0	+10	0
Non-residential Buildable Sq. Ft.	26,136	39,204	78,408	+13,068	+52,272
Population[1]	0	24	0	+24	0
PM Peak Hour Trips/ Daily Trips[2]	97 1,116	152 1,741	295 3,297	+55 +625	+198 +2,180
Sanitary Sewer (gallons/ day)[3]	2,614	5,520	7,841	+2,907	+5,227
Potable Water (gallons/ day)[4]	2,614	5,720	7,841	+3,107	+5,227
Solid Waste (lbs./day)[5]	261	469	784	+208	+523
Stormwater Drainage[6]	n/a	n/a	n/a	n/a	n/a
Recreation/ Open Space (acres)[7]	0	0.07	0	+0.07	0

Notes:

1. Population: 2.39 persons per household (per 2020 Census)
2. Transportation: Multi-family Apartments (220) 0.62 PM peak hour trips per unit and 6.65 daily trips per unit; Shopping Center (820) trips per 1,000 sq. ft. - 3.71 PM Peak Hour; 42.70 Average Daily; Medical Office (720) trips per 1,000 sq. ft. – 4.27 PM Peak Hour, 36.13 Average Daily; ITE Trip Generation Manual, 11th Edition
3. Sanitary Sewer: 160 gallons per day per Equivalent Residential Unit; 1/10 gallon per square foot per day of non-residential development
4. Potable Water: 180 gallons per day per Equivalent Residential Unit; 1/10 gallon per square foot per day of non-residential development
5. Solid Waste: 3.21 pounds per person per day; 10 lbs. per 1,000 square feet of non-residential development per day
6. Stormwater Drainage: LOS standard = 25-year, 24-hour event; Drainage system will be designed to meet the requirements of the Land Development Code
7. Rec. & Open Space: 7 acres/1,000 persons (0.007 acres/person)

The proposed FLU amendment results in a net increase in the number of residential units and non-residential square footage, and impacts to public infrastructure based on the theoretical maximum analysis. However, all public facilities have adequate capacity to

accommodate the proposed amendment and anticipated development. The proposed Restated Catfish Commons MDA allows an overall maximum of 10 residential dwelling units on the two-subject property (4009 and 4084 Halifax Drive), and the commercial square footage allowed on 4084 Halifax Drive is anticipated to be ±11,000 square feet, which is significantly less than the theoretical maximum commercial square footage required to be analyzed.

As with all development, the specific site development proposal for the subject properties will be subject to concurrency regulations at the time of development, requiring adequate public facilities to be provided or to mitigate their impacts.

TRANSPORTATION

As indicated in the Impact Analysis (Table 5), there is an increase in the number of daily trips and P.M. peak hour trips from the current *Commercial* FLU designation to the proposed *Mixed Use Center* FLU designation based on the theoretical maximum analysis. Based on the ITE Trip Generation Manual, 11th Edition, the proposed FLU designation could generate a theoretical maximum of 295 P.M. peak hour trips and 3,297 daily trips.

As previously mentioned, in conjunction with the FLU amendment, a restatement of the Catfish Commons MDA is being processed by a separate application, and based on the allowed number of dwelling units and commercial square footage, the redevelopment of these two properties is anticipated to generate a slight increase in P.M. peak hour trips and daily trips above the traffic currently generated by the development on the subject properties. The proposed development will provide pedestrian connections to link to the other properties within the PCD. The property is also located along the VOTRAN bus route.

Table 6. Roadway Capacity

Road	Location	Volume	Capacity	V/C Ratio*	Remaining Capacity
Ridgewood Avenue	North of Dunlawton Ave.	25,000	39,800	0.63	37%
Ridgewood Avenue	Dunlawton Ave. to Oak Street	17,600	39,800	0.44	56%
Dunlawton Avenue	East of Ridgewood Ave.	26,500	39,800	067	33%
Dunlawton Avenue	Ridgewood Ave. to Spruce Creek Rd.	26,500	39,800	0.67	33%

* Volume/Capacity (V/C) Ratio - Volume-Demand-to-Capacity Ratio compares roadway demand (vehicle volumes) with roadway supply (carrying capacity). A V/C ratio of 1.00 indicates that the roadway is operating at capacity.
Source: 2024 Volusia County Traffic Engineering.

As with all development, the specific site development proposal for the subject property will be subject to concurrency regulations at the time of development, requiring adequate transportation facilities to be provided or to mitigate their impacts.

SANITARY SEWER

The City has available sewer capacity to accommodate the proposed FLU amendment. The City's adopted LOS standard is 160 gallons per day per Equivalent Residential Unit

(ERU) and 1/10 gallon per square foot per day of commercial, industrial, or institutional development. Using these standards, the proposed land use would theoretically generate a maximum of 7,841 gallons per day (gpd) of wastewater. This is a net increase of 5,227 gpd in demand between the current and proposed FLU designations.

POTABLE WATER

The City has potable water capacity (well and Consumptive Use Permit) to serve the proposed FLU amendment. The City's adopted LOS standard is 180 gallons per day per ERU and 1/10 gallon per square foot per day of non-residential development. Using these standards, the proposed land use would theoretically demand a maximum of 7,841 gallons of potable water per day. This is a net increase of 5,227 gpd in demand between the current and proposed FLU designations.

SOLID WASTE COLLECTION

The landfill has the capacity to address the city's solid waste disposal needs. The City's adopted LOS standard for solid waste is 3.21 pounds per person per day and 10 lbs. per 1,000 square feet of non-residential development per day. Using this standard, the proposed FLU designation would generate approximately 784 pounds per day of solid waste based on the theoretical maximum development analysis. This is a net increase of 523 pounds of solid waste between the current and proposed FLU. The solid waste generated within the City of Port Orange is delivered to the Volusia County landfill, a 3,000-acre Class I landfill with a projected life span to the year 2050

STORMWATER DRAINAGE

The proposed land use is not anticipated to impact the City's drainage system. Stormwater management in the City of Port Orange deals with quality and quantity. The stormwater drainage system for this development will be required to comply with the stormwater requirements in the City's Land Development Code and hold about 9.5 inches of rain over 24 hours. More specifically, the stormwater facilities must be capable of treating and conveying the runoff from such a storm without causing flooding of adjacent properties or polluting any receiving water bodies. In addition, the Comprehensive Plan and Land Development Code require that there be no net loss of stormwater retention function as a result of development. In other words, a given parcel must have the same ability to store and discharge water after development as it does before development occurs. Any future redevelopment of the property will be required to address stormwater retention on the property in accordance with these City standards.

RECREATION AND OPEN SPACE

There is capacity at existing park facilities to accommodate the proposed FLU amendment. The proposed FLU designation would require 0.07 acres of parkland. According to the City's 2024 Concurrency Management Report, the city has over 66 acres of parkland, so no additional parkland is needed.

SCHOOLS

Pursuant to the Volusia County School District criteria, the School Board issued a letter of exemption for a finding of adequate capacity for the proposed ten residential units in the Catfish Commons PCD, as the proposed development is below the threshold for

requiring school concurrency review. If additional dwelling units are proposed, the Volusia County School Board will require additional concurrency review.

REVIEW CRITERIA AND STAFF FINDINGS

1. *The land use proposal is consistent with the goals, objectives, and policies of the* adopted *Port Orange Comprehensive Plan*.

   Staff finding: The proposed FLU amendment is generally consistent with the City's Comprehensive Plan's pertinent Goals, Objectives, and Policies. The proposed FLU designation is compatible with adjacent parcels. Adequate capacity exists for portable water, sewer, schools, recreation, stormwater, and solid waste. As with all development, the specific site development proposals for the subject property will be subject to concurrency regulations requiring adequate public facilities to mitigate the impacts.

2. *Amendments shall not result in incompatible land use designations for adjacent parcels or a neighborhood. Compatibility shall be determined by the scale of development, intensity, density, type of use, and the juxtaposition of uses.*

   Staff finding: The proposed FLU amendment is compatible with the adjacent properties (see Tables 1 and 2). Compatibility is defined in the Comprehensive Plan as a condition in which dissimilar land uses can co-exist in relative proximity to one another in a stable fashion over time, such that neither use is unduly negatively impacted by the other.

   The subject property meets the locational criteria for a *Mixed-Use Center*, located near the intersection of two arterial roadways (Dunlawton Avenue and Ridgewood Avenue) with pedestrian access and bus service and being part of the Ridgewood/Dunlawton Community Commercial Node. The proposed amendment is consistent with the City’s Port Orange Town Center CRA Plan redevelopment goals.

   Any future development will be required to comply with all LDC requirements, including those pertaining to roadway landscape buffers and buffers and screening.

3. *An amendment shall not result in negative economic, social, or other impacts on the City of Port Orange.*

   Staff finding: All public facilities have adequate capacity to accommodate the proposed amendment, and therefore, there are no negative impacts. A detailed use-specific concurrency analysis will be conducted as part of any future development of the properties to verify that adequate public facilities are provided to mitigate impacts.

4. *Whether the amendment increases the clearance time for evacuation of the population in the Hurricane Vulnerability Zone above twelve hours.*

Staff finding: The subject property is located within the Hurricane Vulnerability Zone; however, based on the theoretical maximum trip generation in Table 5 and adjacent roadway capacity in Table 6, the proposed FLU Amendment would not increase evacuation times within the Hurricane Vulnerability Zone above twelve hours.

5. *Whether the amendment discourages the proliferation of urban sprawl.*

Staff finding: The proposed amendment will not encourage sprawl. The proposed amendment will support the redevelopment of an infill property with access to existing infrastructure such as water, sewer, and roads.

PUBLIC NOTICE

On January 10, 2025, staff posted the property, notifying the public of the proposed amendment. The proposed amendment has also been advertised in the *News-Journal* pursuant to Florida Statutes. As of the time this agenda item was prepared, staff has received one (1) general inquiry regarding what was included in the proposed amendment, and there were no concerns after the discussion.

STAFF RECOMMENDATION

Staff recommends approval of the request to change the Future Land Use designation of approximately ±1.2 acres of land from *Commercial* to *Mixed-Use Center* and authorization for staff to send the amendment to the required review agencies.

Business Impact Estimate

This form should be included in agenda packet for the item under which the proposed ordinance is to be considered, and must be posted on the City's website by the time notice of the proposed ordinance is published.

Proposed ordinance's title/reference:
Ordinance No. 2025-09 – Amend the Comprehensive Plan Future Land Use (FLU) map to change the FLU designation for ±1.2 acres from *Commercial* to *Mixed-Use Center* (Case No. CPAM-24-0003)

This Business Impact Estimate is provided in accordance with Section 166.041(4), Florida Statutes. If one or more boxes are checked below, this means the City is of the view that a business impact estimate is **not** required by state law[1] for the proposed ordinance, but the City is implementing the procedure required by statutory law to ensure that no inadvertent procedural issue could impact the enactment of the proposed ordinance. This Business Impact Estimate may be revised following its initial posting.

- ☐ The proposed ordinance is required for compliance with Federal or State law or regulation;
- ☐ The proposed ordinance relates to the issuance or refinancing of debt;
- ☐ The proposed ordinance relates to the adoption of budgets or budget amendments, including revenue sources necessary to fund the budget;
- ☐ The proposed ordinance is required to implement a contract or an agreement, including, but not limited to, any Federal, State, local, or private grant, or other financial assistance accepted by the municipal government;
- ☐ The proposed ordinance is an emergency ordinance;
- ☐ The ordinance relates to procurement; or
- ☒ The proposed ordinance is enacted to implement the following:
    a. Development orders, and development permits, as those terms are defined in s. 163.3164; and development agreements as authorized by the Florida Local Government Development Agreement Act under ss. 163.3220-163.3243;
    b. Comprehensive plan amendments and land development regulation amendments initiated by an application by a private party other than the municipality;
    c. Sections 190.005 and 190.046, *Florida Statutes*, regarding community development districts;
    d. Section 553.73, *Florida Statutes*, relating to the *Florida Building Code*; or
    e. Section 633.202, *Florida Statutes*, relating to the *Florida Fire Prevention Code*.

[1] See Section 166.041(4)(c), Florida Statutes.

In accordance with the provisions of controlling law, even notwithstanding the fact that, an exemption noted above may apply, the City hereby publishes the following information:

1. Summary of the proposed ordinance (must include statement of the public purpose, such as serving the public health, safety, morals, and welfare):

The property owners are requesting to change the Future Land Use (FLU) map designation for ±1.2 acres at 4009 (Aunt Catfish Restaurant) and 4084 (former Maloney Funeral Home) Halifax Drive from *Commercial* to *Mixed-Use Center*. The proposed FLU amendment is being processed concurrently with the restatement of the Master Development Agreement (MDA) for the Catfish Commons Planned Commercial Development (PCD) to add 4084 Halifax Drive into the PCD and establish the framework to redevelop 4009 and 4084 Halifax Drive.

2. An estimate of the direct economic impact of the proposed ordinance on private, for-profit businesses in the City, if any:

(a) An estimate of direct compliance costs that businesses may reasonably incur:
N/A

(b) Any new charge or fee imposed by the proposed ordinance or for which businesses will be financially responsible:
N/A

(c) An estimate of the City's regulatory costs, including estimated revenues from any new charges or fees to cover such costs:
N/A

3. Good faith estimate of the number of businesses likely to be impacted by the proposed ordinance: N/A

4. Additional information the governing body deems useful[2] (if any): N/A

[2] *You may wish to include in this section the methodology or data used to prepare the Business Impact Estimate. For example: City staff solicited comments from businesses in the City as to the potential impact of the proposed ordinance by contacting the local Chamber of Commerce, social media posting, direct mail or direct email, posting on City website, public workshop, etc. You may also wish to include efforts made to reduce the potential fiscal impact on businesses. You may also wish to state here that the proposed ordinance is a generally applicable ordinance that applies to all persons similarly situated (individuals as well as businesses) and, therefore, the proposed ordinance does not affect only businesses*.

CITY COUNCIL AGENDA ITEM

COUNCIL MEETING DATE 3/18/2025

SUBJECT: (H18) First Reading - Ordinance No. 2025-10 - Second Restated Master Development Agreement Catfish Commons Planned Commercial Development (Case No. PRZA-24-0008)

DEPARTMENT: Community Development

GOAL: 3 - Quality of Life, 4 - Economic Development

RECOMMENDED MOTION: Move to approve Ordinance No. 2025-10

SUMMARY: Planning Commission Action (2/27/25): Recommended Approval (7-0)

The property owners are requesting to rezone ±0.58 acres from Community Commercial (CC) to Planned Commercial Development (PCD) and add the ±0.58 acres into the existing Catfish Commons Planned Commercial Development (PCD), along with approval of the Second Restatement of the Catfish Commons PCD Master Development Agreement (MDA) and Conceptual Development Plan (CDP). The current PCD area is ±3.4 acres. If approved, the overall area of the PCD would expand to ±4.0 acres, and the Second Restatement of the MDA would provide the framework for development within the 4-acre PCD. The proposed Second Restatement to the Catfish Commons MDA and CDP would establish the following:

1. Maintain the existing development requirements for 4106 and 4108 Halifax Drive and 4075, 4085, and 4147 Ridgewood Avenue. These properties are already within the PCD, and the proposed restatement does not change any of the requirements or allowed uses for these properties.
2. Add 4084 Halifax Drive (former Maloney Funeral Home site) into the PCD and provide the framework to redevelop the property with a mixed-use building with commercial uses on the first floor and up to eight (8) residential units above and a 12-slip marina with on-street parking along Halifax Drive; and
3. Maintain the existing development parameters for 4009 Halifax Drive (Aunt Catfish's restaurant) and allow up to two (2) residential units to be developed above the restaurant.

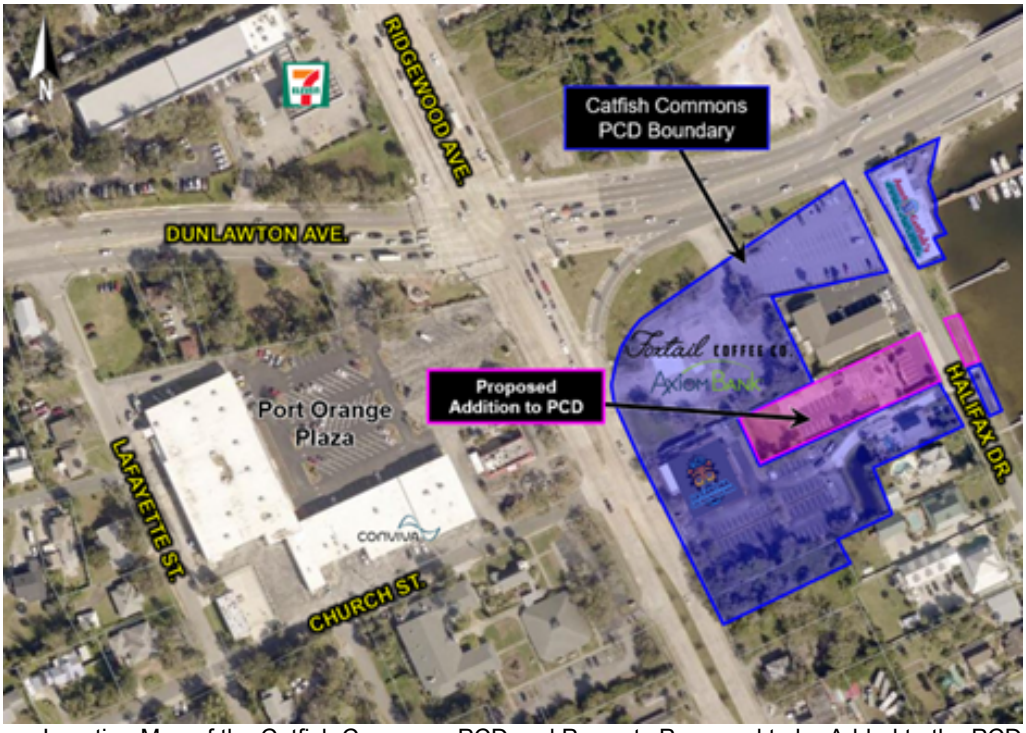

Location Map of the Catfish Commons PCD and Property Proposed to be Added to the PCD

The property proposed to be added to the PCD area currently has commercial zoning. Rezoning the property to PCD and approving the Second Restatement to the MDA and CDP will provide the applicants with the ability to continue to develop cohesive mixed-use development that includes both residential and commercial uses while utilizing existing infrastructure on the developed properties including buildings, parking, driveways, and utilities and provides opportunities for new development within the PCD. According to the property owners, expanding the PCD and restating the MDA and CDP is an indication of their commitment to continue to maintain and improve their property within the Port Orange Town Center CRA.

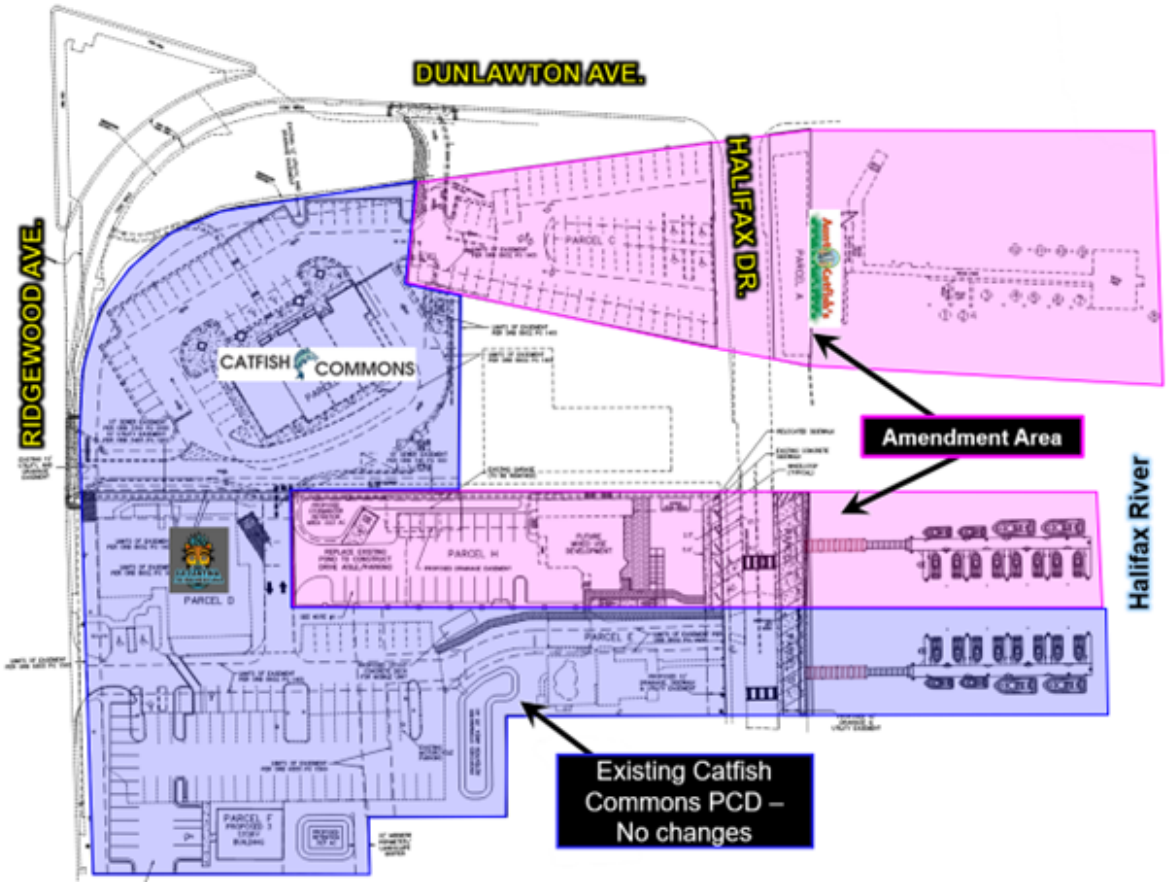

Proposed Conceptual Development Plan (CDP) for the 2nd Restatement of the Catfish Commons PCD

There are three (3) policy issues associated with the proposed Restated MDA and CDP that are further discussed in the staff report:

1. *Allow reduced side and rear building setbacks for 4084 Halifax Drive*. The applicants are requesting a 4' side building setback and 0' rear building setback. According to the applicants, the requested setbacks would apply if the existing building can be repurposed and would make it a conforming structure. If the existing building cannot be repurposed, and a new building is built, a 5' side setback would be required for a new building to allow for flexible building placement on this small infill property. The rear property line for 4084 Halifax Drive is an internal lot line within the PCD and does not abut a property outside the PCD.

2. *Allow on-street parking spaces along the east and west sides of the Halifax Drive right-of-way at4084 Halifax Drive*. The Land Development Code (LDC) does not permit parking spaces to back directly onto a right-of-way. Therefore, allowing parking spaces along Halifax Drive is a policy issue. The property owners are proposing on-street parking to serve the future marina at 4084 Halifax Drive and limited parking for the proposed mixed-use development at 4084 Halifax Drive. According to the applicants, the five (5) parking spaces along the west side of Halifax Drive have existed for over 50 years and the request is to keep the ability to have on-street parking to be used by visitors or residents of the mixed-use development. The proposed new six (6) parking spaces along the east side of Halifax Drive are intended to serve the 12-slip marina at 4084 Halifax Drive and are not anticipated to be high-turnover spaces where vehicles are continuously accessing and exiting, but rather, vehicles parking for an extended period of time.

Halifax Drive is a local, two-lane road with a posted speed limit of 25 MPH. The proposed parking spaces on both the east and west sides of Halifax Drive will be angled and accessed from the adjacent travel lane to provide drivers with better visibility when exiting the parking space, allowing them to see oncoming traffic and pedestrians more easily. In 2022, as part of the First Restatement to the Catfish Commons MDA and CDP, on-street parking spaces along the east side of the Halifax Drive right-of-way were approved for a 12-slip marina at 4108 Halifax Drive (adjacent property).

3. *Waive the 10-foot landscape buffer requirement along Halifax Drive and allow a varied width landscape buffer along the north side of 4084 Halifax Drive*. The LDC requires a 10' landscape buffer along Halifax Drive and a 5' landscape buffer along the north property line. The applicants are requesting to waive the 10' landscape buffer along Halifax Drive to allow the on-street parking requested in Policy Issue #2 and the development of an entertainment area for commercial uses in the mixed-use building that may include a covered deck, a game yard, and a mobile food truck. The applicants also request a varied-width buffer along the north property line ranging from 4 feet to 5 feet wide to maintain existing site improvements. The applicants are proposing to provide the required number of landscape plantings for a 5-foot landscape buffer within the proposed buffer area and foundation plantings along the front facade of the building.

There are no changes to the previously approved language in the MDA that allow for the waiver of all city development review application submittal, site inspection, building permit, building inspection, and fees for future Comprehensive Plan Amendments, MDA Amendments, and all development-related applications within Catfish Commons PCD, excluding impact fees, water and sewer development fees, and stormwater special assessment fees for 5 years from the recording date for the latest MDA. Restating the MDA will extend the fee waiver until 2030 for development applications and building permits in the PCD.

A Future Land Use (FLU) Amendment (Case No. CPAM-24-0003) is being processed concurrently with the rezoning application to change the FLU designation at 4009 and 4084 Halifax Drive from *Commercial* to *Mixed-Use Center* to allow for the proposed development of these properties as described in the Second Restatement to the Catfish Commons MDA and CDP. The PCD is compatible with the FLU designation for the properties in the PCD.

The Staff Report is attached for more information.

PRESENTER: Tim Burman

ATTACHMENTS:

1.	Ordinance No. 2025-10 w exhibits	Ordinance No. 2025-10 w exhibits.pdf
2.	STAFF REPORT	STAFF REPORT .pdf
3.	Business Impact Estimate - ORD 2025-10 - PRZA-24-0008	Business Impact Estimate - ORD 2025-10 - PRZA-24-0008.docx

Penelope Cruz	Created/Initiated - 2/28/2025
Tim Burman	Approved - 2/28/2025
Shannon Balmer	Approved - 3/5/2025
Wayne Clark	Final Approval - 3/7/2025

ORDINANCE NO. 2025-10

AN ORDINANCE OF THE CITY OF PORT ORANGE, VOLUSIA COUNTY, FLORIDA, REZONING PROPERTY CONSISTING OF APPROXIMATELY ±0.58 ACRES FROM COMMUNITY COMMERCIAL (CC) TO CATFISH COMMONS PLANNED COMMERCIAL DEVELOPMENT (PCD); APPROVING THE SECOND RESTATED MASTER DEVELOPMENT AGREEMENT CATFISH COMMONS PLANNNED COMMERICAL DEVELOPMENT (MDA) AND CONCEPTUAL DEVELOPMENT PLAN (CDP); PROVIDING FOR REPEAL OF CONFLICTING ORDINANCES; PROVIDING FOR SEVERABILITY; AND PROVIDING AN EFFECTIVE DATE.

WHEREAS, the property owner has requested the rezoning of the property consisting of approximately ±0.58 acres being identified as Parcel 6341-04-05-0010, from Community Commercial (CC) to Catfish Commons Planned Commercial Development (PCD); and

WHEREAS, the City and Developer desire to enter into the Second Re-stated Master Development Agreement Catfish Commons Planned Commercial Development (“MDA”) and

WHEREAS, Developer submitted a request to the Planning Commission to approve the MDA and CDP for the Second Re-stated Master Development Agreement Catfish Commons Planned Commercial Development; and

WHEREAS, a public hearing was held following public notice as prescribed by ordinance; and

WHEREAS, the Planning Commission has by a majority vote recommended approval of the proposed the Second Re-stated Master Development Agreement Catfish Commons Planned Commercial Development (“MDA”) and Conceptual Development Plan (“CDP”); and

NOW, THEREFORE, BE IT ORDAINED BY THE CITY COUNCIL OF THE CITY OF PORT ORANGE, VOLUSIA COUNTY, FLORIDA:

Section 1. The City Council of the City of Port Orange does hereby rezone the property consisting of ±0.58 acres being identified as Parcel 6341-04-05-0010, from Community Commercial (CC) to Catfish Commons Planned Commercial Development (PCD), generally located on the south of Dunlawton Avenue, east of Ridgewood Avenue, more particularly described in **Exhibit "1"**, attached hereto.

Section 2. The City Council of the City of Port Orange does hereby approve, authorize, and direct the revision of the City's Official Zoning Atlas classification as shown on **Exhibit "2"** attached hereto.

Section 3. The City Council of the City of Port Orange does hereby approve the Second Re-stated Master Development Agreement Catfish Commons Planned Commercial Development ("MDA") and Conceptual Development Plan ("CDP") for a ±4.0-acre site, attached hereto as **Exhibit "3"**.

Section 4. The Mayor and City Clerk are hereby authorized to execute said Second Re-stated Master Development Agreement Catfish Commons Planned Commercial Development ("MDA") on behalf of the City of Port Orange.

Section 5. All ordinances or resolutions or parts of ordinances or resolutions in conflict with the provisions of this ordinance are hereby repealed to the extent of such

conflict.

Section 6. If any provision of this ordinance or the application thereof to any person or circumstance is held invalid, the invalidity shall not affect other provisions or applications of this ordinance which can be given effect without the invalid provision or application, and to this end the provisions of this ordinance are declared severable.

Section 7. This ordinance shall become effective coincident with the effective date of Ordinance No. 2025-09.

_____
MAYOR SCOTT STILTNER

ATTEST:

_____
Robin L. Fenwick, MMC, City Clerk

Passed on first reading on the day of _____, 2025

Passed and adopted on second and final reading on the day of _____,2025

Reviewed and Approved: _____
Shannon K. Balmer, Senior Assistant City Attorney

EXHIBIT “1”

Lot 5A, except the Westerly 150 feet thereof, and the Northerly 5 feet of Lot 5B, except the Westerly 150 feet thereof, of Assessors Subdivision of the Elizabeth Bunch Grant, Port Orange, according to the map or plat thereof as recorded in Map Book 3, Page 128, of the Public Records of Volusia County, Florida. LESS AND EXCEPT right-of-way for Halifax Drive.

EXHIBIT "2"

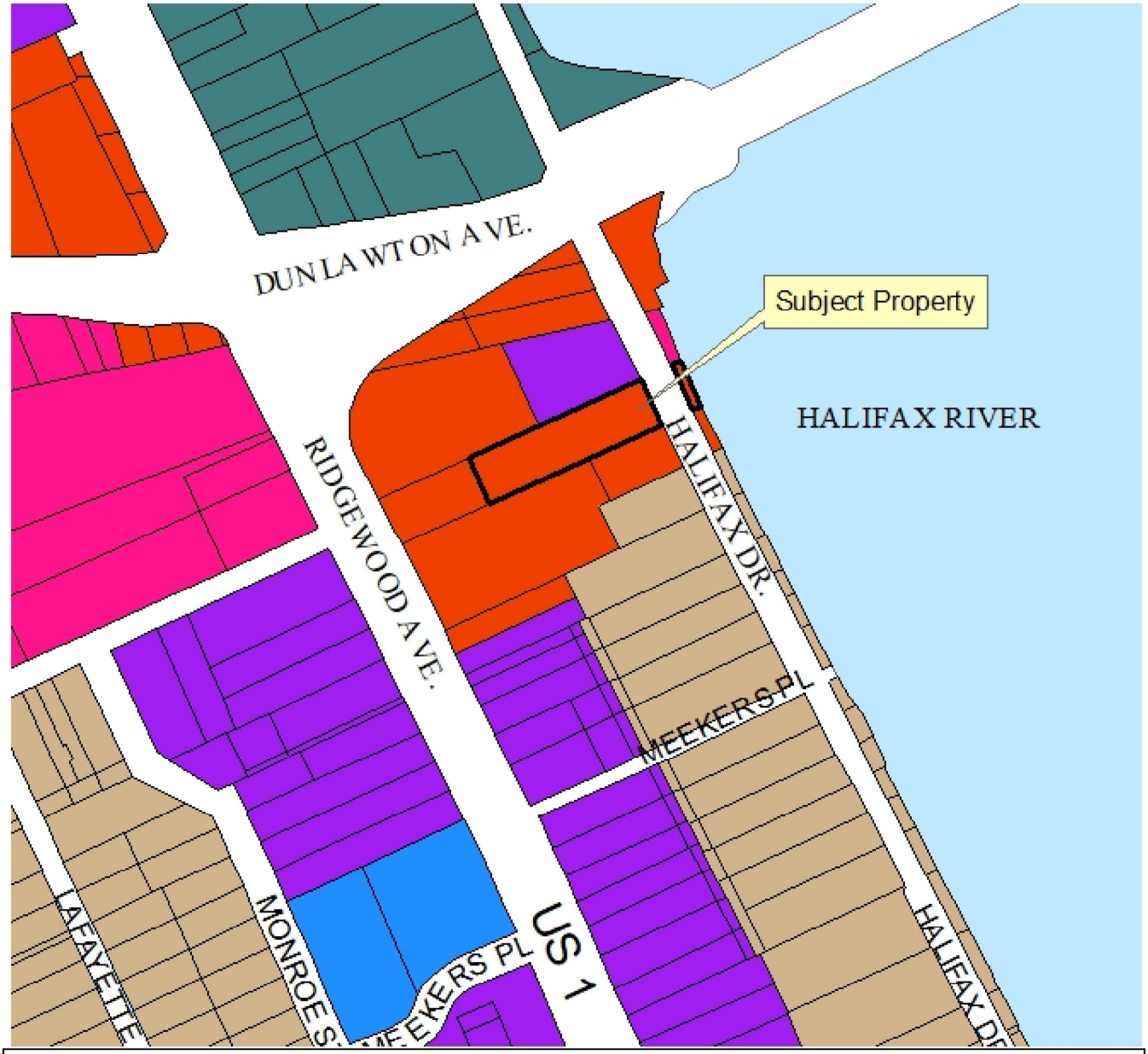

Legend

- Community Commercial
- Government/Public Use
- Neighborhood Preservation
- Planned Commercial Development
- Planned Community-PO Riverwalk
- Ridgewood Development

CITY OF PORT ORANGE 1867 FLORIDA

Zoning

CITY OF PORT ORANGE

DEPARTMENT OF COMMUNITY DEVELOPMENT

N W E S

EXHIBIT "3"

SECOND RE-STATED MASTER DEVELOPMENT AGREEMENT CATFISH COMMONS PLANNED COMMERCIAL DEVELOPMENT

THIS SECOND RE-STATED MASTER DEVELOPMENT AGREEMENT CATFISH COMMONS PLANNED COMMERCIAL DEVELOPMENT ("MDA") is entered into between the City of Port Orange, a Florida municipal corporation, having a mailing address of 1000 City Center Circle, Port Orange, Florida 32129 (hereinafter the "City"); and Brendan and Shannon Galbreath (husband and wife), having a mailing address of 4190 Halifax Drive, Port Orange, Florida 32127; and Commons 4075, LLC having a mailing address of 4190 Halifax Drive, Port Orange, Florida 32127 and Halifax 4084, LLC having a mailing address of 4190 Halifax Drive, Port Orange, Florida 32127 (the "Owner & Developer"), who hereby agree and covenant and bind their successors and assigns as follows:

WHEREAS, The City and Owner & Developer have previously entered into a Master Development Agreement for Catfish Commons Planned Commercial Development recorded in Official Record Book 6784, Page 970 ("Original MDA") as amended by the First Amendment to the Master Development Agreement for Catfish Commons Planned Commercial Development recorded in the Official Record Book 7684, Page 3350 ("First Amendment") as restated with a Re-Stated Master Development Agreement for Catfish Commons Planned Commercial Development recorded in Official Record Book 8278, Page 3843 (Restated MDA"), as amended by the First Amendment to the Restated Master Development Agreement for Catfish Commons Planned Commercial Development recorded in Official Record Book 8583, Page 4586 ("First Amendment to Restated MDA") all in Public Records, Volusia County, Florida; and

WHEREAS, the Parties hereto intend for this Second Re-stated Master Development Agreement Catfish Commons Planned Commercial Development to be an amendment to and restatement of, and shall supersede and replace the Original MDA, the First Amendment, the Restated MDA, and the First Amendment to Restated MDA .

NOW, THEREFORE, the City and Owner & Developer do hereby agree as follows:

1. **THE PROPERTY**
   The property that is subject to this Agreement consists of approximately 3.98 acres of real property located at 4009 Halifax Drive (Parcels 6303-11-01-0022 and 6303-11-01-0030) Parcels A and C, 4075 Ridgewood Avenue (Parcel 6303-11-01-0012) Parcel B, 4085 Ridgewood Avenue (Parcel 6341-04-05-0020) Parcel D , 4106 and 4108 Halifax Drive (Parcel 6341-04-05-0050) Parcels E and G, 4147 Ridgewood Avenue (Parcel 6341-04-03-0010) Parcel F, and 4084 Halifax Dr. (6314-04-05-0010) Parcel H, all within the municipal limits of the City of Port Orange and described on Exhibit "A", which is attached hereto and by reference made a part hereof (the "Property").

2. **CONFORMANCE WITH COMPREHENSIVE PLAN**
   The City has determined that the Property is suitable in size, location and character for the uses proposed, that the uses proposed meet the needs of the City, and that the uses proposed are consistent with the City's Comprehensive Plan as of the date of adoption of this Agreement enacting the zoning provided herein.

3. **DEVELOPMENT**
   The Property shall generally be developed as a multi-tenant commercial and office project, with a long term residential component, short term "vacation rental" residential component, event venue and boat slips for rent to motorized boats and other water based activities, subject to permitting and compliance with the City's Land Development Code and the Volusia County Manatee Protection Plan, except where specifically deviated from in this PCD, as depicted on the Conceptual Development Plan ("CDP") prepared by Parker Mynchenburg and Associates, which is attached hereto and incorporated herein as Exhibit "B" and as more particularly described below.

4. **DEVELOPMENT AGREEMENT AND CONCEPTUAL DEVELOPMENT PLAN**
   A. Development of the Property shall be controlled by the terms and conditions of this Master

Development Agreement (the "Agreement") and the CDP, which is attached hereto and incorporated herein as Exhibit "B". The CDP generally depicts the planned layout of improvements to the Property. Collectively, this Agreement and the CDP for the Property may be referred to as the "Plan". In case of conflict between any textual provision of this Agreement and the CDP, the textual provision of this Agreement shall control. If the Agreement is silent regarding a particular subject or requirement, such silence shall not be construed as a conflict with the CDP. Except as otherwise provided in this Agreement, in the event of a conflict between the terms and provisions of the Plan and the City's ordinances, the requirements of the City's ordinances shall control. If the Plan fails to address a particular subject or requirement, the requirements of the applicable City ordnance(s) as defined by the Land Development Code of the City of Port Orange, Florida ("LDC"), shall control.

B. The parties acknowledge that compliance with the environmental preservation requirements of the LDC may necessitate modifications of the CDP. In the event modifications to comply with the LDC are required, and modifications to the CDP are not in conflict with the textual provisions of this Agreement and LDC requirements are not superseded by this Agreement, the modifications shall be deemed "minor" and may be approved without formal amendment of this Agreement. Minor modifications shall require the written approval by the Administrative Official, who is defined in the LDC. If the Owner & Developer is not satisfied with the suggested resolution or the decision of the City Administrative Official categorizing the modifications as minor or major, the Owner & Developer may appeal the decision to the Planning Commission. Appeals from the Planning Commission may be made to the City Council.

C. An administrative variance from the dimensional requirements in this MDA may be granted when such variance would be equal to or less than ten percent of the required dimension, when deemed appropriate by the Administrative Official, who is defined in the LDC. Application for administrative variances from the dimensional requirements shall be made on the appropriate forms provided by the Community Development Department for that purpose.

5. PERMITTED USES

A. 4009 Halifax Drive (6303-11-01-0022 and 6303-11-01-0030) Parcels A and C
Uses allowed within the Mixed Use Center ("MXU") zoning district and 2 Residential Units (Long Term or Short Term) shall be permitted.

B. 4075 Ridgewood Avenue (Parcel 6303-11-01-0012) Parcel B
Uses allowed within the Ridgewood Development ("RD") zoning district shall be permitted, along with one restaurant/food service with a drive thru.

C. 4085 Ridgewood Avenue (Parcel 6341-04-05-0020) Parcel D
Uses allowed within the Mixed Use Center ("MXU") zoning district, bike and run race staging (Special Events would need approval per the Code of Ordinances) and Mobile Commercial (for commercial uses as identified in the Mixed Use Center ("MXU") zoning district, see Exhibit "C") shall be permitted.

D. 4147 Ridgewood Avenue (Parcel 6341-04-03-0010) Parcel F
Uses allowed within the Mixed Use Center ("MXU") zoning district shall be permitted, with a maximum of 4 residential units.

E. 4106 Halifax Drive (above drive thru feature) (Parcel 6341-04-05-0050) Parcel E
One residential rental unit with no minimum or maximum rental time period to be occupied only by the business owner or manager of a business located within the PCD Property.

F. 4108 Halifax Drive (Parcel 6341-04-05-0050) Parcel E and G
The square-footage for uses within this structure is limited to the 1st floor until all the properties located on Halifax Drive, between 4108 Halifax Dr. and Meeker Place have been rezoned to a commercial or mixed-use zoning district*

- Single family residence**
- Restaurant – No Drive-thru

- Ice cream shop
- Retail
- Professional and medical office
- Bed and breakfast inn
- 12 slip Marina for Motorized watercraft slip rental and water related activities***

G. 4084 Halifax Drive (Parcel 6341-04-05-0010) Parcel H and I

- Uses allowed within the Mixed Use Center ("MXU") zoning district
- 8 Residential Units (Long Term or Short Term)
- 12 slip Marina for Motorized watercraft slip rental and water related activities***
- Event Venue
- Mobile Commercial (for all commercial uses as identified in the Mixed Use Center ("MXU") zoning district, see Exhibit "C")

* The existing single-family dwelling at 4108 Halifax Dr. is a non-confirming use and will be subject to the provisions regarding non-conforming uses and structure outline in Chapter 3 of the LDC.

** Special owner-occupancy provisions. The City shall permit given business owners/managers to reside in a dwelling unit which is set within the principal (business establishment) structure, provided these establishments comply with all other requirements of the LDC and adopted building and fire codes.

*** Marina dock will be allowed to extend more than 100ft from the Halifax Drive bulkhead subject to the Volusia County Manatee Protection Plan and Florida Department of Environmental Protection permitting.

6. DIMENSIONAL REQUIREMENTS

Maximum Building Coverage of Total PCD Area: 35%
Minimum Open Space of Total PCD Area: 30%
Maximum Floor Area Ratio (FAR) of Total PCD: 1.0
Minimum Building Setbacks, Maximum Building Heights, and Drive Aisle Widths:

4009 Halifax Drive (Parcels 6303-11-01-0022 and 6303-11-01-0030) Parcels A and C
Dunlawton Avenue -0' **
East of Halifax Drive -0' **
West of Halifax Drive -0' **
Side -0' **
Maximum Height -45'

4075 Ridgewood Avenue (Parcel 6303-11-01-0012) Parcel B
Ridgewood Avenue -12'
Dunlawton Avenue -20'
Rear -10'
Side -10'
Maximum Height -45'

4085 Ridgewood Avenue (Parcel 6341-04-05-0020) Parcel D
Ridgewood Avenue -10'
Rear -10'
Side -10'
Maximum Height -45'

4147 Ridgewood Avenue (Parcel 6341-04-03-0010) Parcel F
Ridgewood Avenue -
12' Rear – 10'***
South Side -10'
North Side - 0'

Maximum Height -45’

4106/4108 Halifax Drive (Parcel 6341-04-05-0050) Parcels E and G
West of Halifax Dr – 40’*
East of Halifax Dr – 0’
North side of Entry Feature - 2.5’
South Side -5’***
Rear -10’ ***
Rear of Entry Feature - 8’
Maximum Height - 35’
Driveway Setback - 5’
Marina Pier Access – 15’ from side property lines
One Way Driveway Width - 10’

4084 Halifax Drive (Parcel 6341-04-05-0010) Parcel H and I
West of Halifax Dr – 20’
East of Halifax Dr – 0’
North Side - 5’ for new construction and 4’ for existing structures
South Side - 0’
Rear -0’
Maximum Height - 45’
Marina Pier Access – 15’ from side property lines
(See Exhibit “H” for reference)

*Setback may be reduced to 10’ once all the properties located on Halifax Drive, between Dunlawton Avenue and Meeker Place have been rezoned to commercial or mixed-use zoning district
**Setback takes into account the 4009 Halifax Drive existing building location and is designed to allow that as well as the parking lot at 4009 Halifax Drive to remain in its current location without change
***Commercial building rear setbacks adjoining residential zoning shall be equal to or greater than the building height
****Parcels D and F are proposed to be combined via Unity of Title or lot combination. The internal lot line will be eliminated and the proposed building on Parcel F may encroach onto Parcel D

7. MAINTENANCE OF COMMON AREAS AND AMENITIES

The owner of parcel 6303-11-01-0022, their successors and assigns shall be jointly and severally responsible for the maintenance of the common facilities of the Property. A declaration of covenants and restrictions addressing the obligations and rights of all the Property subject to this MDA shall be required at the time of site plan submittal.

8. LANDSCAPE BUFFER AND OPAQUE SCREENING

4009 Halifax Drive (Parcels 6303-11-01-0022 and 6303-11-01-0030)
Dunlawton Avenue -0’*
East of Halifax Drive -0’*
West of Halifax Drive -0’*
Rear -0’*
Side -0’*

4075 Ridgewood Avenue (Parcel 6303-11-01-0012)
Ridgewood Avenue -10’
Dunlawton Avenue -3’
Rear -5’
Side -1’ minimum, average of 5’

4085 Ridgewood Avenue (Parcel 6341-04-05-0020)
Ridgewood Avenue -10'
Rear -5'
Side -5'

4147 Ridgewood Avenue (Parcel 6341-04-03-0010)
Ridgewood Avenue -10'
Rear -10'
Side -5'

4106/4108 Halifax Drive (Parcel 6341-04-05-0050)
West of Halifax Dr - 10'
East of Halifax Dr - 0'
Rear - 0'
North Side - 2.5'
South Side -5'

4084 Halifax Drive (Parcel 6341-04-05-0010)
West of Halifax Dr - 0'
East of Halifax Dr - 0'
Rear - 0'
North Side - 5' for new construction and 0' for existing structures
South Side - 0'

*Landscape buffer takes into account the 4009 Halifax Drive existing building location and is designed to allow that as well as the parking lot at 4009 Halifax Drive to remain in its current location without change
**Two (2) palm trees can be substituted for every one (1) required shade tree within the buffer to satisfy minimum buffer planting requirements.
***A minimum six-foot (6') opaque fence or wall is to be installed on south side of the 4108 Halifax Drive property when or if the property is converted into a non-residential use that abuts a residential zoning district. General location of the fence or wall is shown on the CDP.
****Landscape buffers may be reduced to 0' along internal PCD property lines.
*****Vehicle Use Area Landscaped Islands will be permitted to be 5% of all properties

9. ARCHITECTURAL/DESIGN STANDARDS

A. All buildings and accessory structures in the PCD area shall be developed in compliance with the terms of Chapter 14 of the LDC as to architectural requirements.
B. If the structure at 4108 Halifax Drive is demolished or expanded, the architectural design of the new or expanded commercial structure must be consistent with the architectural design of the structures located on Halifax Drive, south 4108 Halifax Drive. The architectural design requirement for 4108 Halifax will defer back to Chapter 14 of the LDC upon all the properties located on Halifax Drive, between 4108 Halifax Dr. and Meeker Place being rezoned to a commercial or mixed-use zoning district.

10. PARKING AND ACCESS

Per provided Catfish Commons Shared Parking Allocation in "Exhibit D", all parking is considered common and shared throughout the entire Catfish Commons PCD, regardless of the address it is constructed on.

A. Parking spaces will be permitted to be 9' wide and 19' deep.
B. Minimum number of off-street parking will be provided as required by Exhibit D.
C. Per Case No., (11-70000002), 4085 Ridgewood Avenue provides 29 "off-site" parking spaces for 4009 Halifax Drive.
D. The minimum 10ft wide one-way driveway shown on the CDP is for circulation of traffic from 4108 Halifax Drive west to the parking lot at 4085 Ridgewood Avenue. Eastbound vehicular traffic is not

permitted onto Halifax Drive.

E. 4106 Halifax Drive residential unit parking ratio shall be 1 space for 1 unit.
F. 4085 Ridgewood Avenue and 4084 Halifax Drive Mobile Commercial parking ratio shall be 3 spaces for 1 unit.
G. 4009 Halifax Drive parking lot layout, space size and drive aisle size, dimensions and locations are considered existing non-conforming as shown on the CDP and shall be permitted to remain as is including but not limited to existing 10' one way drive aisle widths and existing 8.5" wide parking spaces.
H. Riverfront Parking spaces at 4084 and 4108 Halifax Drive east of Halifax Drive for the Marina and the Parking Spaces on the West edge of Halifax Drive on 4084 Halifax Drive are permitted to back out onto Halifax Drive provided they are angled at a minimum of 60 degrees. (Exhibit "I")
I. Parking spaces for mixed-use development at 4084 Halifax Drive are permitted to back out onto Halifax Drive provided they are angled at a minimum of 60 degrees and that the existing 4-foot wide public sidewalk is re-routed to the west side of the subject spaces as a public access 5-6 foot wide sidewalk (to be determined at site plan review). The subject space may also encroach into the portion of the Halifax Drive right-of- way, outside of the drive lanes, currently developed with a continuous concrete apron, subject to approval of a License Agreement.
J. 4085 Ridgewood Avenue new two-way drive aisle width with no parking backing into it running north/south directly on the east edge of the building structure shall be permitted to be 20' wide.
K. 4085 Ridgewood Avenue existing two-way drive aisle width with no parking backing into it on the east end of the parking lot between eastern most parking spaces and retention pond shall be permitted to be 16' wide.
L. Tandem parking spaces: The spaces shall be reserved for use by employees. Such spaces shall be identified or designated for employee parking through the use of signage or pavement markings. Dimensions for tandem parking spaces are the same as required for standard parking spaces in this MDA.

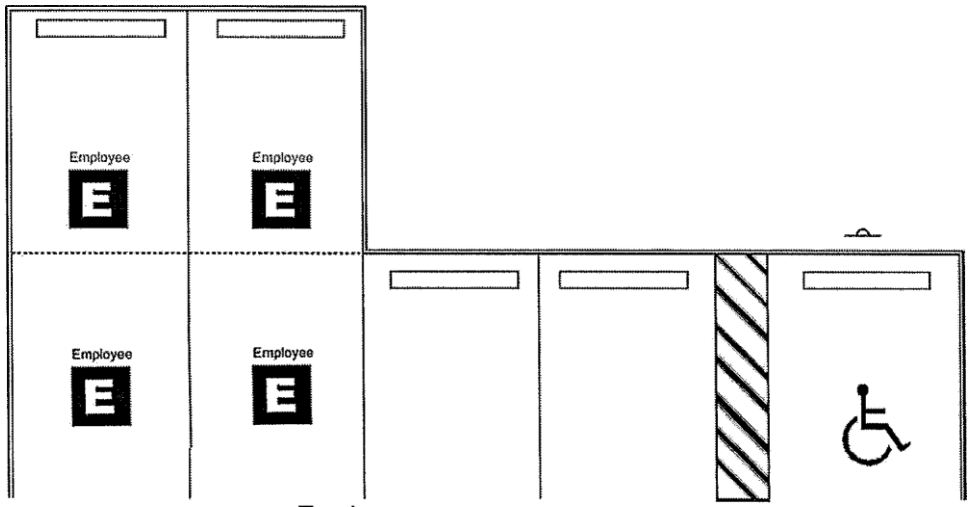

Tandem spaces

M. Landscape Curb will be permitted to angle into parking spaces that are located directly in front of the building on 4075 Ridgewood Avenue parcel only, to expand and enhance the landscape beds as shown for example in Exhibit "F". Parking spaces will have to meet ADA Code.
N. Overall Parking provided for all properties located within the Catfish Commons PCD falls under the Land Development Code Chapter 12, Section 4, item d (3) Reduction for mixed or joint use of parking spaces.
O. Any Dock within the Catfish Commons PCD area will be permitted to be a Water Taxi Docking location.

11. **DOCK / WATER ACCESS**

The properties at 4108 Halifax Drive (Parcel 6341-04-05-0050, Parcels E and G) and 4084 Halifax Drive (Parcel 6341-04-05-0010, Parcel H and I) shall be permitted to have a total of 24 boat slips for

rent to the public. The dock may be floating or stationary and constructed out of wood, composite material or cement and will be allowed to extend more than 100ft from the Halifax Drive bulkhead subject to the Volusia County Manatee Protection Plan and Florida Department of Environmental Protection permitting and as otherwise required by any other applicable local, state and federal laws. The slips may be rented to both motorized and non-motorized vessels at the owner/operator's discretion. The sale of gas and overnight live-aboard vessels shall be prohibited. The rental of motorized and non-motorized vessels to the public shall be a permitted use. Additionally, the dock may be used as an access point in and out of the water for any special event permitted on the property. Twelve (12) parking spaces shall be permitted east of Halifax Drive to support the Marinas.

12. **ROAD & ACCESS WAYS**

All roadways, drives, sidewalks, pathways, bike paths, and walkways providing access within and throughout the Property shall be private and privately maintained in accordance with declaration of covenants and restrictions recorded in the public records by the Owner & Developer.

13. PUBLIC UTILITIES AND STORMWATER MANAGEMENT

A. Public utilities shall be designed to meet the City's specifications and requirements of the LDC and City Standard Construction Details.

B. Stormwater shall be retained as generally depicted on the CDP. The Owner & Developer shall comply with the LDC, City Standard Construction Details and the rules and regulations of the St. John's River Water Management District concerning storm water drainage. The Owner & Developer shall provide all required easements to the City over the proposed retention area and related stormwater structures.

C. There are existing structures that are nonconforming structures, as defined in the LDC prior to being rezoned into the subject PCD, which encroach over existing stormwater pipes and the area where a drainage easement is to be established pursuant to the LDC. These nonconforming structures, may remain in their current location as generally shown on the CDP; however, with the application for site plan approvals, the Owner & Developer shall be required to provide a drainage easement or document similar thereto, to include language substantially similar to the following:

"Grantee agrees that in the event the nonconforming structure is destroyed, damaged or repairs exceed the limits set forth in Ch. 3, Art. II, Section 8, LDC, the nonconforming structure shall not be re-installed or re-constructed in the location of the encroachment, pursuant to Ch. 3, Art. II, Section 8, LDC."

14. SIGNAGE

The signage for the PCD properties shall be in compliance with the terms of Chapter 15 of the LDC with the following exceptions:

A. The tenant at 4009 Halifax Dr shall be permitted to have a sign panel on the monument sign at 4075 Ridgewood Avenue and 4085 Ridgewood Avenue. The multi-tenant monument signs at 4075 Ridgewood Avenue and 4085 Ridgewood Avenue may have a maximum sign area not to exceed 84 square feet.

B. A Commemorative Sign (not to exceed 64 sq ft) located on the building at 4075 Ridgewood Avenue shall be permitted separate from the allowable square footage for wall signs on that building. The commemorative signage will not count towards the maximum wall sign area allowed for the building and will be similar to the signage depicted on Exhibit "G".

C. The following signage is allowed for the property at 4108 Halifax Drive: 1 (one) "post" sign (see Exhibit "E" for example)
    i. Max Height: 6'
    ii. Max Sign Area: 24 SF

D. Externally illuminated or non-illuminated wall signage shall be permitted when or if the existing single-family residence at 4108 Halifax Dr. is converted to a commercial use. The colors and material shall compliment and coordinate with the appearance of the structure. Maximum sign height and area as allowed by Chapter 15 of the LDC for an individual commercial use.

E. Off-site signage on parcels within the PCD area is allowed for any business within the PCD. Signage shall otherwise be permitted as per the requirements in the LDC for directional signage.
F. A Mural located on the buildings at 4075 Ridgewood Avenue and 4084 Halifax Drive shall be permitted separate from the allowable square footage for wall signs on each of those buildings. The Murals will not count towards the maximum wall sign area allowed for the buildings and will be similar to the signage depicted on Exhibit "H".

15. PHASING

The PCD Property can be re-developed in multi-phases or as a single phase as shown on the CDP. The phases can be developed in any order.

- 4085 Ridgewood Avenue Mobile Commercial
- 4075 Ridgewood Avenue multi-tenant building and associated parking improvements
- 4108 Halifax Drive Single Family Dwelling conversion to commercial
- 4147 Ridgewood Avenue 3 story building and associated parking improvements
- 4108 Halifax Drive 12 slip Marina and associated parking improvements
- 4084 Halifax Drive Mixed Use Center and associated parking improvements
- 4084 Halifax Drive 12 slip Marina and associated parking improvements
- 4084 Halifax Drive Mobile Commercial
- 4084 Residential units and associated parking improvements
- 4009 Halifax Drive Long Term or Short Term Residential Units

16. ENVIRONMENTAL CONSIDERATIONS

A. Owner & Developer shall comply with all rules, statues, laws and regulations pertaining to protected wildlife species, including but not limited to the rules and permitting requirements of the Florida Fish and Wildlife Commission. Compliance with the City Environmental Preservation Code may necessitate modification of the CDP.

17. EFFECTIVE DATE AND EXPIRATION

A. This Agreement shall be effective upon recording by the City at the Owner & Developer's expense in the public records of Volusia County, Florida not later than thirty (30) days from the date the City Council approves the re-zoning. The restrictions on use and development imposed by this Agreement shall be binding upon all successors in interest in the Property, unless and until the City alters or eliminates such restrictions in the course of the City's actions as zoning authority or until this Agreement expires.
B. Development of the Catfish Commons PCD shall commence within five (5) years from the date of executions of this Agreement. The term "Development" shall be defined by the LDC.

18. AMENDMENTS

A. Amendments to this Agreement, other than minor modifications to the CDP as referred to in Section 3 of this Agreement, shall not be effective unless in writing and signed by all record title property owners of the land for which the amendment is to be applied, and the City.
B. Before amending this Agreement, the City shall conduct one or more public hearings. At the City's option, one of the public hearings may be held by the Planning Commission.
    1. Notice of intent to consider an amendment to this Agreement shall be published by the City, at the Owners cost, in a newspaper of general circulation and readership in Volusia County, Florida.
    2. If applicable, notice of intent to consider an amendment shall comply with the requirements of Section 166.041(3)(c), Florida Statutes, as amended from time to time.
    3. The day, time, and place at which the second public hearing shall take place shall be announced at the first public hearing.
    4. The notices required above shall specify the location of the PCD Property, the location of that portion of the PCD Property subject to the proposed amendment, the nature of the proposed amendment, and the following information to the extent applicable:
        i. Changes permitted, conditional, and/or prohibited uses proposed.
        ii. Changes in building intensities and/or height proposed.
    5. All notices shall specify a place where a copy of the proposed amendment can be obtained.

19. CONFORMANCE WITH LAWS

A. The Owner & Developer agrees:

1. To develop the Property according to all regulations of the City to the extent those regulations are not inconsistent with the Plan for the Property.
2. To be bound by all City codes and ordinances that are not in conflict with the provisions of this Agreement.

20. ENFORCEABILITY

If any provision of this agreement is held by a court of competent jurisdiction to be invalid or otherwise unenforceable, such holding not affect the validity or enforceability of any other provision of this Agreement unless the holding so states.

21. PRIOR AGREEMENTS

This Agreement represents the complete understanding by and between the parties with respect to the development and continued use of the subject PCD Property. This Agreement shall be an amendment to and restatement of, and shall supersede and replace the Original MDA and First Amendment. Any and all prior agreements between the parties with respect to any subject comprehended by this Agreement is hereby voided and suspended by this Agreement. Any amendment to this Agreement shall be in writing and signed by the City and the Owner(s).

22. POLICE POWER

Nothing contained in this Agreement shall be construed as a waiver of or contract with respect to the regulatory and permitting authority of the City as it now or hereafter exists under applicable laws, rules and regulations. Further, nothing contained in this Agreement shall be construed as a waiver of the attempted waiver by the City of its sovereign immunity under the constitution and laws of the State of Florida.

23. WAIVER OF FUTURE CITY FEES

Any and all city development review application submittal, site inspection, building permit, building inspection, and approval fees for future Comprehensive Plan Amendments, MDA Amendments, and all development related applications within Catfish Commons PCD excluding impact fees and stormwater special assessment fee are hereby waived for a period of 5 years from the recording date of this Second Re-stated Master Development Agreement Catfish Commons Planned Commercial Development.

[SIGNATURES ON FOLLOWING PAGES]

IN WITNESS WHEREOF, the parties have executed this Restated Catfish Commons Planned Commercial Development Master Development Agreement, by and through their duly authorized representatives, on the respective dates below.

WITNESSES:

CITY OF PORT ORANGE, FLORIDA
a Chartered Municipal Corporation

_____
Name: _____

Name: _____

Name: _____

Name: _____

By: _____
Scott Stiltner, Mayor

Date: _____

Attest: _____
Robin L. Fenwick, MMC, City Clerk

Date: _____

STATE OF FLORIDA
COUNTY OF VOLUSIA

The foregoing instrument was acknowledged before me, by means of [_] physical presence or [_] online notarization, this __ day of _____, 2025 by Scott Stiltner, as Mayor and Robin L. Fenwick, as City Clerk, both of the City of Port Orange, Florida, a chartered municipal corporation, who acknowledged that he is duly authorized to execute the foregoing agreement on behalf of the city. He is personally known to me.

Notary Public, State of Florida at Large
Printed name, commission and expiration of commission term:

WITNESSES:

BRENDAN AND SHANNON GALBREATH,
Property owners

Name: _____

Name: _____

By: _____
Brendan Galbreath, Property Owner

Date: _____

Name: _____

Name: _____

By: _____
Shannon Galbreath, Property Owner

Date: _____

STATE OF FLORIDA
COUNTY OF VOLUSIA

The foregoing instrument was acknowledged before me, by means of [_] physical presence or [_] online notarization, this __ day of _____, 2025 by Brendan and Shannon Galbreath property owners, who are [ ] personally known to me or [ ] who have produced _____ as identification and who did not take an oath.

Notary Public, State of Florida at Large
Printed name, commission and expiration of commission term:

WITNESSES:

COMMONS 4075 LLC,
Property owner
By: _____
Brendan Galbreath, Member,
Commons 4075 LLC,

_____
Name: _____

Name: _____

Date: _____

By: _____
Shannon Galbreath, Member,
Commons 4075 LLC,

_____
Name: _____

Name: _____

Date: _____

Eric Gaffka Revocable Living Trust dated
December 1, 1999
By: _____
Eric Gaffka, Trustee,
Member, Commons 4075 LLC,
Date: _____

_____
Name: _____

Name: _____

STATE OF FLORIDA
COUNTY OF VOLUSIA

The foregoing instrument was acknowledged before me, by means of [_] physical presence or [_] online notarization, this ____ day of _____, 2025 by Brendan and Shannon Galbreath, property owners, who are [ ] personally known to me or [ ] who have produced _____ as identification and who did not take an oath.

Notary Public, State of Florida at Large
Printed name, commission and expiration of commission term:

STATE OF FLORIDA
COUNTY OF VOLUSIA

The foregoing instrument was acknowledged before me, by means of [_] physical presence or [_] online notarization, this ____ day of _____, 2025 by Eric Gaffka, Trustee, who are [ ] personally known to me or [ ] who have produced _____ as identification and who did not take an oath.

Notary Public, State of Florida at Large
Printed name, commission and expiration of commission term:

WITNESSES:

HALIFAX 4084 LLC,
Property owner
By: _____
Brendan Galbreath, Member,
Halifax 4084 LLC,

_____
Name: _____

Name: _____

Date: _____

_____
Name: _____

By: _____
Shannon Galbreath, Member,
Halifax 4084 LLC,

Name: _____

Date: _____

STATE OF FLORIDA
COUNTY OF VOLUSIA

The foregoing instrument was acknowledged before me, by means of [_] physical presence or [_] online notarization, this ____ day of _____, 2025 by Brendan and Shannon Galbreath, property owners, who are [ ] personally known to me or [ ] who have produced _____ as identification and who did not take an oath.

Notary Public, State of Florida at Large
Printed name, commission and expiration of commission term:

Exhibit “A”

Legal Description

6 Parcels Combined West of Halifax Drive

ALL OF THE LAND DESCRIBED IN OFFICIAL RECORDS BOOK 6250 PAGE 4505,

ALL OF THE LAND DESCRIBED IN OFFICIAL RECORDS BOOK 8057 PAGE 4666,

ALL OF OFFICIAL RECORDS BOOK 6928 PAGE 1511, LYING WESTERLY OF THE WEST RIGHT OF WAY LINE OF HALIFAX DRIVE,

ALL OF THE LAND DESCRIBED IN OFFICIAL RECORDS BOOK 6598 PAGE 1462,

ALL OF OFFICIAL RECORDS BOOK 6598 PAGE 1462,

AND ALL OF OFFICIAL RECORDS BOOK 7781, PAGE 4878, BEING DESCRIBED AS FOLLOWS:

BEGIN AT THE NORTHEAST CORNER OF SAID OFFICIAL RECORDS BOOK 6250 PAGE 4505, THENCE, THE FOLLOWING:

THENCE S 26°05’26” E A DISTANCE OF 142.22 FEET;

THENCE S 76°48’21” W A DISTANCE OF 181.53 FEET;

THENCE S 24°27’17” E A DISTANCE OF 137.06 FEET;

THENCE N 65°14’09” E A DISTANCE OF 180.91 FEET;

THENCE S 26°20’47” E A DISTANCE OF 154.91 FEET;

THENCE S 65°18’12” W A DISTANCE OF 152.63 FEET;

THENCE S 25°41’50” E A DISTANCE OF 70.23 FEET;

THENCE S 65°14’55” W A DISTANCE OF 96.58 FEET;

THENCE S 26°19’51” E A DISTANCE OF 39.95 FEET;

THENCE S 65°25’49” W A DISTANCE OF 191.93 FEET;

THENCE ALONG A NON-TANGENT CURVE CONCAVE SOUTHEAST, HAVING AN ARC LENGTH OF 44.55 FEET, A RADIUS OF 11509.20 FEET, A DELTA ANGLE OF 00°13’18”, AND A CHORD BEARING OF N 26° 30’15” W, CHORD LENGTH OF 44.55 FEET,

THENCE N 26°36’54” W A DISTANCE OF 254.92 FEET;

THENCE N 21°45’31” W A DISTANCE OF 38.26 FEET;

THENCE ALONG A NON-TANGENT CURVE CONCAVE SOUTHEAST, HAVING AN ARC LENGTH OF 178.87 FEET, A RADIUS OF 134.30 FEET, A DELTA ANGLE OF 76°18’37”, AND A CHORD BEARING OF N 16°26’05” E, CHORD LENGTH OF 165.94 FEET,

THENCE N 57°26’23” E A DISTANCE OF 124.09 FEET;

THENCE N 57°29’48” E A DISTANCE OF 206.21 FEET TO THE POINT OF BEGINNING.

HAVING AN AREA OF 166,137 SQUARE FEET, 3.81 ACRES

4084 and 4108 Halifax Drive Upland Parcels East of Halifax Drive

All OF THAT PARCEL OF LAND DESCRIBED IN OFFICIAL RECORD BOOK 6928, PAGE 1511, AND OFFICIAL BOOK 8335, PAGE 4257, PUBLIC RECORDS OF VOLUSIA COUNTY, FLORIDA, LYING EASTERLY OF HALIFAX DRIVE, A 40 FOOT WIDE ROAD PER DEEDS, BEING DESCRIBED AS FOLLOWS:

BEGIN AT THE INTERSECTION OF THE NORTH LINE OF SAID OFFICIAL RECORD BOOK 6928, PAGE 1511, AND THE EASTERLY LINE OF SAID HALIFAX DRIVE;

THENCE N 26’20’47” W ALONG SAID EASTERLY RIGHT OF WAY LINE, A DISTANCE OF 79.93 FEET;

THENCE ALONG NORTH LINE OF SAID OFFICIAL RECORD BOOK 8335, PAGE 4257, N 65’14’09” E, A DISTANCE OF 21.52 FEET TO AN INTERSECTION WITH THE EAST FACE OF AN EXISTING CONCRETE SEAWALL;

THENCE THE NEXT THREE COURSES ALONG SAID EAST FACE OF CONCRETE SEAWALL:
1) THENCE S 23’45’20” E A DISTANCE OF 79.92 FEET;
2) THENCE S 65’15’37” W A DISTANCE OF 4.93 FEET
3) THENCE S 25’24’07” E A DISTANCE OF 75.01 FEET TO AN INTERSECTION WITH THE SOUTH LINE OF SAID OFFICIAL RECORDS BOOK 6928, PAGE 1511

THENCE S 65’18’12” W ALONG SAID SOUTH LINE OF OFFICIAL RECORDS BOOK 6928, PAGE 1511, A DISTANCE OF 11.74 FEET TO AN INTERSECTION WITH SAID EAST LINE OF HALIFAX DRIVE ;

THENCE N 26’20’47” W ALONG SAID EAST LINE OF HALIFAX DRIVE, A DISTANCE OF 75.03 FEET TO THE POINT OF BEGINNING.

HAVING AN AREA OF 2,505 SQUARE FEET, 0.06 ACRES

4009 Halifax Drive Upland Parcel East of Halifax Drive

A PORTION OF SECTION 3, TOWNSHIP 16 SOUTH, RANGE 33 EAST, VOLUSIA COUNTY, FLORIDA, DESCRIBED AS FOLLOWS:
FOR A POINT OF BEGINNING COMMENCE AT THE INTERSECTION OF THE EASTERLY RIGHT-OF-WAY LINE OF HALIFAX DRIVE, A 40 FOOT RIGHT-A-WAY, WITH THE SOUTHERLY RIGHT-OF-WAY LINE OF DUNLAWTON AVENUE (S-421) RUN N57’37’14”E ALONG THE SOUTHERLY RIGHT-OF-WAY LINE OF SAID DUNLAWTON AVENUE, A DISTANCE OF 29.11 FEET, THENCE S24’38’37”E CONTINUING ALONG SAID RIGHT-OF-WAY LINE, A DISTANCE OF 59.61 FEET; THENCE N62’03’04”E CONTINUING ALONG SAID RIGHT-OF-WAY LINE, A DISTANCE OF 32.74 FEET; THENCE DEPARTING SAID RIGHT-OF-WAY LINE RUN S55’45’42”E, A DISTANCE OF 0.38 FEETTO AN INTERSECTION WITH THE SAFE UPLAND LINE (ELEVATION 1.50 FEET) ; THENCE ALONG SAID SAFE UPLAND LINE THE FOLLOWING COURSES AND DISTANCES; S28’52’21”W, A DISTANCE OF 16.40 FEET; THENCE S24’32’32”W, A DISTANCE OF 7.63 FEET; THENCE S27’35’16”W, A DISTANCE OF 13.28 FEET; THENCE S22’13’35”3E, A DISTANCE OF 79.19 FEET TO A POINT OF THE FACE OF A CONCRETE SEAWALL; THENCE S23’38’31”E ALONG SAID SEAWALL, A DISTANCE OF 25.45 FEET TO THE AFOREMENTIONED EASTERLY RIGHT-OF-WAY LINE OF HALIFAX DRIVE; THENCE N26’04’47”W ALONG SAID RIGHT-OF-WAY LINE, A DISTANCE OF 155.65 FEET TO THE POINT OF BEGINNING.

HAVING AND AREA OF 4839.18 SQUARE FEET, .11 ACRES

CATFISH COMMONS PCD CONCEPTUAL DEVELOPMENT PLAN

"EXHIBIT B"

LAND USE CALCULATION:

SITE AREA = 6 COMBINED PARCELS = 3.81 AC
SITE AREA PARCEL A = 0.11 AC
SITE AREA PARCEL G & I = 0.06 AC

TOTAL SITE AREA PARCELS A–I = 3.98 AC

PARCEL A & C #630311010030, #630311010022 = 27,179 SF (0.62 AC)
EXISTING PAVEMENT = 20,575 SF (0.47 AC)
EXISTING BUILDING = 4,792 SF (0.11 AC)
TOTAL IMPERVIOUS AREA = 25,367 SF (0.58 AC) = 93.33%
TOTAL OPEN SPACE AREA = 1,812 SF (0.04 AC) = 6.67%

PARCEL B #630311010012 = 47,693 SF (1.09 AC)
PROPOSED PAVEMENT = 25,229 SF (0.58 AC)
PROPOSED PAVERS = 613 SF (0.01 AC)
PROPOSED CONCRETE = 476 SF (0.01 AC)
PROPOSED BUILDING = 6,513 SF (0.15 AC)
TOTAL IMPERVIOUS AREA = 32,831 SF (0.75 AC) = 68.84%
TOTAL OPEN SPACE AREA = 14,863 SF (0.34 AC) = 31.16%
TOTAL BUILDING COVERAGE = 6,513 SF/47,693 SF = 13.66%

PARCEL D #634104050020 = 55,236 SF (1.27 AC)
EXISTING PAVEMENT = 27,324 SF (0.63 AC)
EXISTING CONCRETE = 2,452 SF (0.06 AC)
EXISTING BUILDING = 7,090 SF (0.16 AC)
PROPOSED PAVEMENT = 550 SF (0.01 AC)
PROPOSED CONCRETE = 155 SF (0.003 AC)
TOTAL IMPERVIOUS AREA = 37,571 SF (0.86 AC) = 68.02%
TOTAL OPEN SPACE AREA = 17,665 SF (0.41 AC) = 31.98%
TOTAL BUILDING COVERAGE = 7,090 SF/55,236 SF = 12.84%

PARCEL E & G #634104050050 = 10,810 SF (0.25 AC)
EXISTING CONCRETE = 2,740 SF (0.06 AC)
EXISTING BUILDINGS = 2,124 SF (0.05 AC)
PROPOSED CONCRETE = 910 SF (0.02 AC)
TOTAL IMPERVIOUS AREA = 5,774 SF (0.13 AC) = 53.41%
TOTAL OPEN SPACE AREA = 5,036 SF (0.12 AC) = 46.59%
TOTAL BUILDING COVERAGE = 2,124 SF/10,810 SF = 19.65%

PARCEL F #634104030010 = 7,606 SF (0.17 AC)
PROPOSED PAVEMENT = 2,148 SF (0.05 AC)
PROPOSED CONCRETE = 249 SF (0.006 AC)
PROPOSED BUILDING = 1,610 SF (0.04 AC)
TOTAL IMPERVIOUS AREA = 4,007 SF (0.09 AC) = 52.68%
TOTAL OPEN SPACE AREA = 3,599 SF (0.08 AC) = 47.32%
TOTAL BUILDING COVERAGE = 1,610 SF/7,606 SF = 21.17%

PARCEL H & I #634104050010 = 25,225 SF (0.58 AC)
EXISTING CONCRETE & PAVEMENT = 9,130 SF (0.21 AC)
EXISTING BUILDINGS = 5,346 SF (0.12 AC)
PROPOSED PAVEMENT = 4,747 SF (0.11 AC)
TOTAL IMPERVIOUS AREA = 19,223 SF (0.44 AC) = 76.21%
TOTAL OPEN SPACE AREA = 6,002 SF (0.14 AC) = 23.79%
TOTAL BUILDING COVERAGE = 5,346 SF/25,225 SF = 21.19%

LAND USE SUMMARY:

TOTAL COMBINED SITE AREA = 173,749 SF (3.98 AC)
TOTAL IMPERVIOUS AREA = 124,773 SF (2.86 AC) = 71.81%
TOTAL OPEN SPACE AREA = 48,976 SF (1.12 AC) = 28.19%
TOTAL BUILDING COVERAGE = 27,475 SF/173,749 SF = 15.81%

NOTES:

1. COMPLIANCE WITH THE LAND DEVELOPMENT CODE MAY NECESSITATE MODIFICATION OF THE CONCEPTUAL PLAN PER LDC CHAPTER 17, SECTION 18(G)(2)(K).

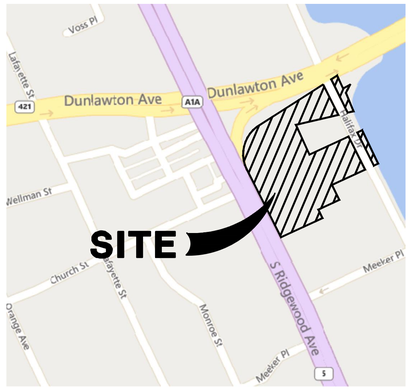

VICINITY MAP
SCALE 1" = 300'

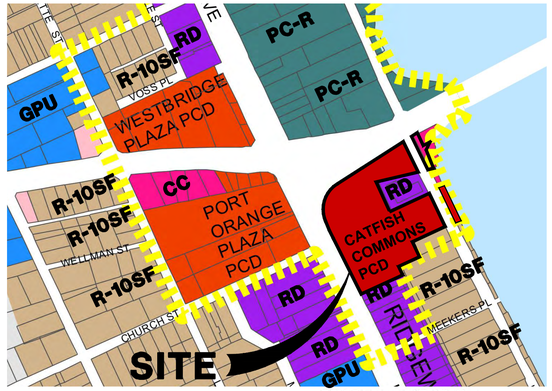

ZONING MAP
SCALE 1" = 300'

GPU Government/Public Use
PC-R Planned Community-PO Riverwalk
CC Community Commercial
RD Ridgewood Development
R-10SF Single Family Residential
Riverwalk Overlay District

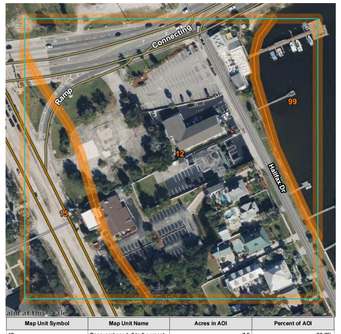

Map Unit Symbol	Map Unit Name	Acres in AOI	Percent of AOI
12	Canaveral sand, 0 to 5 percent slopes	7.9	70.7%
15	Cocoa sand, 0 to 5 percent slopes	2.0	18.2%
99	Water	1.2	11.1%
Totals for Area of Interest		11.1	100.0%

SOIL MAP

FEMA FLOOD MAP
ZONES = X AND AE
MAP EFFECTIVE DATE 09/29/17

ENGINEER/LANDSCAPE ARCHITECT:

PARKER MYNCHENBERG & ASSOCIATES, INC.
PARKER MYNCHENBERG P.E. #32645
PARKER MYNCHENBERG L.A. #1553
CERTIFICATE OF AUTHORIZATION NUMBER: 00003910
1729 RIDGEWOOD AVENUE
HOLLY HILL, FLORIDA 32117
(386) 677–6891 FAX (386) 677–2114
EMAILS: info@parkermynchenberg.com
sbuswell@parkermynchenberg.com

ARCHITECT:

BPF DESIGN
BRIAN FREDLEY
207 FAIRVIEW AVENUE
DAYTONA BEACH, FLORIDA 32114 PHONE:
(386) 257–0502
FAX: (386) 257–1050
E–MAIL: BPFDESIGN@CFL.RR.COM

SURVEYOR:

CULLUM LAND SURVEYING, INC.
5889 S. WILLIAMSON BLVD. #205
PORT ORANGE, FL 32128
ph: 386–761–7666
fax: 386–761–7909
GREGGC@CULLUMLANDSURVEYING.COM

PROPERTY OWNERS:

PARCEL B #630611010012
OWNER: COMMONS 4075 LLC
ADDRESS: 4075 RIDGEWOOD AVE,
PORT ORANGE, FLORIDA 32127

PARCEL A & C #630311010030, #630311010022
OWNER: GALBREATH BRENDAN R & SHANNON
ADDRESS: DUNLAWTON AVE,
PORT ORANGE, FLORIDA 32127

PARCEL F #634104030010
OWNER: GALBREATH BRENDAN – TE– TENANCY IN THE ENTIRETY – 100
GALBREATH SHANNON – TE – TENANCY IN THE ENTIRETY – 100
ADDRESS: 4147 RIDGEWOOD AVE,
PORT ORANGE, FLORIDA 32127

PARCEL D #634104050020
OWNER: GALBREATH BRENDAN & SHANNON – 100
ADDRESS: 4085 RIDGEWOOD AVE,
PORT ORANGE, FLORIDA 32127

PARCEL E & G #634104050050
OWNER: GALBREATH BRENDAN R – TE– TENANCY IN THE ENTIRETY – 100
GALBREATH SHANNON M – TE – TENANCY IN THE ENTIRETY – 100
ADDRESS: 4108 HALIFAX DR,
PORT ORANGE, FLORIDA 32127

PARCEL H & I #634104050010
OWNER: HALIFAX 4084 LLC – FS – FEE SIMPLE
ADDRESS: 4084 HALIFAX DR,
PORT ORANGE, FLORIDA 32127

6 PARCELS (PARCELS B, C, D, E, F, & H) COMBINE WEST OF HALIFAX DRIVE LEGAL DESCRIPTION

A COMPOSITE LEGAL DESCRIPTION OF THE FOLLOWING, FOR INFORMATIONAL PURPOSES ONLY, BASED ON A FIELD SURVEY OF THE FOLLOWING OFFICIAL RECORDS BOOK AND PAGES,
ALL OF OFFICIAL RECORDS BOOK 6250 PAGE 4505,
ALL OF OFFICIAL RECORDS BOOK 8057 PAGE 4666,
ALL OF OFFICIAL RECORDS BOOK 6928 PAGE 1511, LYING WESTERLY OF THE WEST RIGHT OF WAY LINE OF HALIFAX DRIVE,
ALL OF OFFICIAL RECORDS BOOK 6598 PAGE 1462,
AND ALL OF OFFICIAL RECORDS BOOK 7781, PAGE 4878, BEING DESCRIBED AS FOLLOWS: BEGIN AT THE NORTHEAST CORNER OF SAID OFFICIAL RECORDS BOOK 6250 PAGE 4505, THENCE, THE FOLLOWING;
THENCE S 26°05'26" E A DISTANCE OF 142.22 FEET;
THENCE S 76°48'21" W A DISTANCE OF 181.53 FEET;
THENCE S 24°27'17" E A DISTANCE OF 137.06 FEET;
THENCE N 65°14'09" E A DISTANCE OF 180.91 FEET;
THENCE S 26°20'47" E A DISTANCE OF 154.91 FEET;
THENCE S 65°18'12" W A DISTANCE OF 152.63 FEET;
THENCE S 25°41'50" E A DISTANCE OF 70.23 FEET;
THENCE S 65°14'55" W A DISTANCE OF 96.58 FEET;
THENCE S 26°19'51" E A DISTANCE OF 39.95 FEET;
THENCE S 65°25'49" W A DISTANCE OF 191.93 FEET;
THENCE ALONG A NON–TANGENT CURVE CONCAVE SOUTHWEST, HAVING AN ARC LENGTH OF 44.55 FEET, A RADIUS OF 11509.20 FEET, A DELTA ANGLE OF 00°13'18", AND A CHORD BEARING OF N 26°30'15" W, CHORD LENGTH OF 44.55 FEET; THENCE N 26°36'54" W A DISTANCE OF 254.92 FEET; THENCE N 21°45'31" W A DISTANCE OF 38.26 FEET; THENCE ALONG A NON–TANGENT CURVE CONCAVE SOUTHEAST, HAVING AN ARC LENGTH OF 178.87 FEET, A RADIUS OF 134.30 FEET, A DELTA ANGLE OF 76°18'37", AND A CHORD BEARING OF N 16°26'05" E, CHORD LENGTH OF 165.94 FEET; THENCE N 57°26'23" E A DISTANCE OF 124.09 FEET; THENCE N 57°29'48" E A DISTANCE OF 206.21 FEET TO THE POINT OF BEGINNING.
HAVING AN AREA OF 166137 SQUARE FEET, 3.81 ACRES

4084 & 4108 (PARCEL G & I) HALIFAX DRIVE UPLAND PARCEL EAST OF HALIFAX DRIVE LEGAL DESCRIPTION

ALL OF THAT PARCEL OF LAND DESCRIBED IN OFFICIAL RECORDS BOOK 6928, PAGE 1511, AND OFFICIAL RECORDS BOOK 8335, PAGE 4257, PUBLIC RECORDS OF VOLUSIA COUNTY, FLORIDA, LYING EASTERLY OF HALIFAX DRIVE, A 40 FOOT WIDE ROAD PER DEEDS, BEING DESCRIBED AS FOLLOWS: BEGIN AT THE THE INTERSECTION OF THE NORTH LINE OF SAID OFFICIAL RECORDS BOOK 6928, PAGE 1511, AND THE EASTERLY LINE OF SAID HALIFAX DRIVE;
THENCE N 26°20'47" W ALONG SAID EASTERLY RIGHT OF WAY LINE, A DISTANCE OF 79.93 FEET; THENCE ALONG NORTH LINE OF SAID OFFICIAL RECORDS BOOK 8335, PAGE 4257, N 65°14'09" E, A DISTANCE OF 21.52 FEET TO AN INTERSECTION WITH THE EAST FACE OF AN EXISTING CONCRETE SEAWALL; THENCE THE NEXT THREE COURSES ALONG SAID EAST FACE OF CONCRETE SEAWALKLL: THENCE S 23°45'20" E A DISTANCE OF 79.92 FEET; THENCE S 65°15'37" W A DISTANCE OF 4.93 FEET; THENCE S 25°24'07" E A DISTANCE OF 75.01 FEET TO AN INTERSECTION WITH THE SOUTH LINE OF SAID OFFICIAL RECORDS BOOK 6928, PAGE 1511; THENCE S 65°18'12" W ALONG SAID SOUTH LINE OF OFFICIAL RECORDS BOOK 6928, PAGE 1511, A DISTANCE OF 11.74 FEET TO AND INTERSECTION WITH SAID EAST LINE OF HALIFAX DRIVE; THENCE N 26°20'47" W ALONG SAID EAST LINE OF HALIFAX DRIVE, A DISTANCE OF 75.03 FEET TO THE POINT OF BEGINNING. HAVING AN AREA OF 2502 SQUARE FEET, 0.06 ACRES

4009 (PARCEL A) HALIFAX DRIVE UPLAND PARCEL EAST OF HALIFAX DRIVE LEGAL DESCRIPTION

(AS SUPPLIED BY CLIENT)
A PORTION OF SECTION 3, TOWNSHIP 16 SOUTH, RANGE 33 EAST, VOLUSIA COUNTY, FLORIDA, DESCRIBED AS FOLLOWS:
FOR A POINT OF BEGINNING COMMENCE AT THE INTERSECTION OF THE EASTERLY RIGHT–OF–WAY LINE OF HALIFAX DRIVE, A 40 FOOT RIGHT–OF–WAY, WITH THE SOUTHERLY RIGHT–OF–WAY LINE OF DUNLAWTON AVENUE (S–421) RUN N57°37'14"E ALONG THE SOUTHERLY RIGHT–OF–WAY LINE OF SAID DUNLAWTON AVENUE, A DISTANCE OF 29.11 FEET, THENCE S24°38'37'E CONTINUING ALONG SAID RIGHT–OF–WAY LINE, A DISTANCE OF 59.61 FEET; THENCE N62°03'04"E CONTINUING ALONG SAID RIGHT–OF–WAY LINE, A DISTANCE OF 32.74 FEET; THENCE DEPARTING SAID RIGHT–OF–WAY LINE RUN S55°45'42"E, A DISTANCE OF 0.38 FEET TO AN INTERSECTION WITH THE SAFE UPLAND LINE (ELEVATION 1.50 FEET) ; THENCE ALONG SAID SAFE UPLAND LINE THE FOLLOWING COURSES AND DISTANCES; S28°52'21"W, A DISTANCE OF 16.40 FEET; THENCE S24°32'32"W, A DISTANCE OF 7.63 FEET; THENCE S27°35'16"W, A DISTANCE OF 13.28 FEET; THENCE S22°13'35"E, A DISTANCE OF 79.19 FEET TO A POINT TO THE FACE OF A CONCRETE SEAWALL; THENCE S23°38'31"E ALONG SAID SEAWALL, 4.74 FEET; THENCE S76°49'56"W DEPARTING SAID SEAWALL, A DISTANCE OF 25.45 FEET TO THE AFOREMENTIONED EASTERLY RIGHT–OF–WAY LINE OF HALIFAX DRIVE; THENCE N26°04'47"W ALONG SAID RIGHT–OF–WAY LINE, A DISTANCE OF 155.65 FEET TO THE POINT OF BEGINNING. CONTAINING 4839.18 SQUARE FEET 0.11 ACRES

NO.	DATE	DESCRIPTION	BY
		REVISIONS	
5.	12.18.2024	REVISED	ADK
4	12.17.2024	REVISED	ADK
3	12.16.2024	REVISED	ADK
2	11.20.2024	REVISED PER SDRC COMMENTS	ADK
1	09/09/2024	REVISED	MAG

PARKER MYNCHENBERG & ASSOCIATES, INC.
PROFESSIONAL ENGINEERS * LANDSCAPE ARCHITECTS
1729 RIDGEWOOD AVENUE HOLLY HILL, FLORIDA 32117
(386) 677–6891 FAX (386) 677–2114 E–MAIL: info@parkermynchenberg.com
PARKER MYNCHENBERG P.E. #32645 P.L.A. #001553, STEVE BUSWELL P.E. #53985 P.L.A. #6667011
CERTIFICATE OF AUTHORIZATION NUMBER 00003910

CATFISH COMMONS
PORT ORANGE * FLORIDA
PCD CONCEPTUAL DEVELOPMENT PLAN
"EXHIBIT B"

1 OF 2
SHEET NO.

DRAWN BY: ADK
DATE: 11/20/2024
JOB NO. 24–02
SCALE: NONE

SEAL

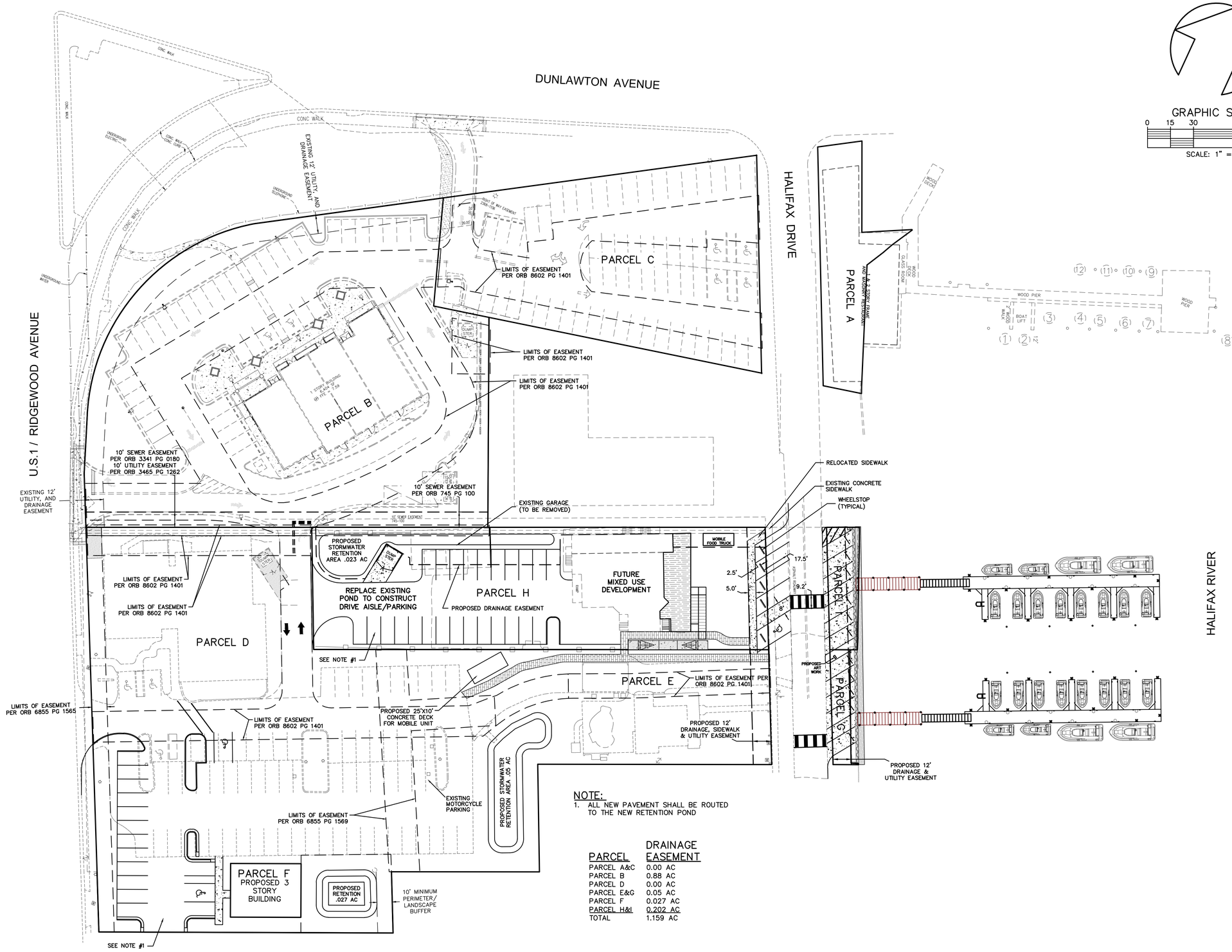

NOTE:
1. ALL NEW PAVEMENT SHALL BE ROUTED TO THE NEW RETENTION POND

PARCEL	DRAINAGE EASEMENT
PARCEL A&C	0.00 AC
PARCEL B	0.88 AC
PARCEL D	0.00 AC
PARCEL E&G	0.05 AC
PARCEL F	0.027 AC
PARCEL H&I	0.202 AC
TOTAL	1.159 AC

NO.	DATE	DESCRIPTION	BY
		REVISIONS	
5	12.18.2024	REVISED	ADK
4	12.17.2024	REVISED	ADK
3	12.16.2024	REVISED	ADK
2	11.20.2024	REVISED PER SDRC COMMENTS	ADK
1	09/09/2024	REVISED	MAG

PARKER MYNCHENBERG & ASSOCIATES, INC.
PROFESSIONAL ENGINEERS * LANDSCAPE ARCHITECTS
1729 RIDGEWOOD AVENUE HOLLY HILL, FLORIDA 32117
(386) 677-6891 FAX (386) 677-2114 E-MAIL: info@parkermynchenberg.com
PARKER MYNCHENBERG P.E. #32645 R.L.A. #0001553, STEVE BUSHELL P.E. #53985 R.L.A. #6667011
CERTIFICATE OF AUTHORIZATION NUMBER 00003910

CATFISH COMMONS
PORT ORANGE * FLORIDA

PCD CONCEPTUAL DEVELOPMENT PLAN
"EXHIBIT B"

2 OF 2
SHEET NO.

DRAWN BY: ADK
DATE: 11/20/2024
JOB NO. 24-02
SCALE: NONE

SEAL

Map Unit Symbol	Map Unit Name	Acres in AOI	Percent of AOI
12	Canaveral sand, 0 to 5 percent slopes	7.9	70.7%
15	Cocoa sand, 0 to 5 percent slopes	2.0	18.2%
99	Water	1.2	11.1%
Totals for Area of Interest		**11.1**	**100.0%**

SOILS MAP

PARKER MYNCHENBERG
& ASSOCIATES, INC.
PROFESSIONAL ENGINEERS * LANDSCAPE ARCHITECTS
1729 RIDGEWOOD AVENUE HOLLY HILL, FLORIDA 32117
(386) 677-6891 FAX (386) 677-2114 E-MAIL: info@parkermynchenberg.com
PARKER MYNCHENBERG P.E. #32645 R.L.A. #0001553, STEVE BUSWELL P.E. #53985 R.L.A. #LA6667011
CERTIFICATE OF AUTHORIZATON NUMBER 00003910

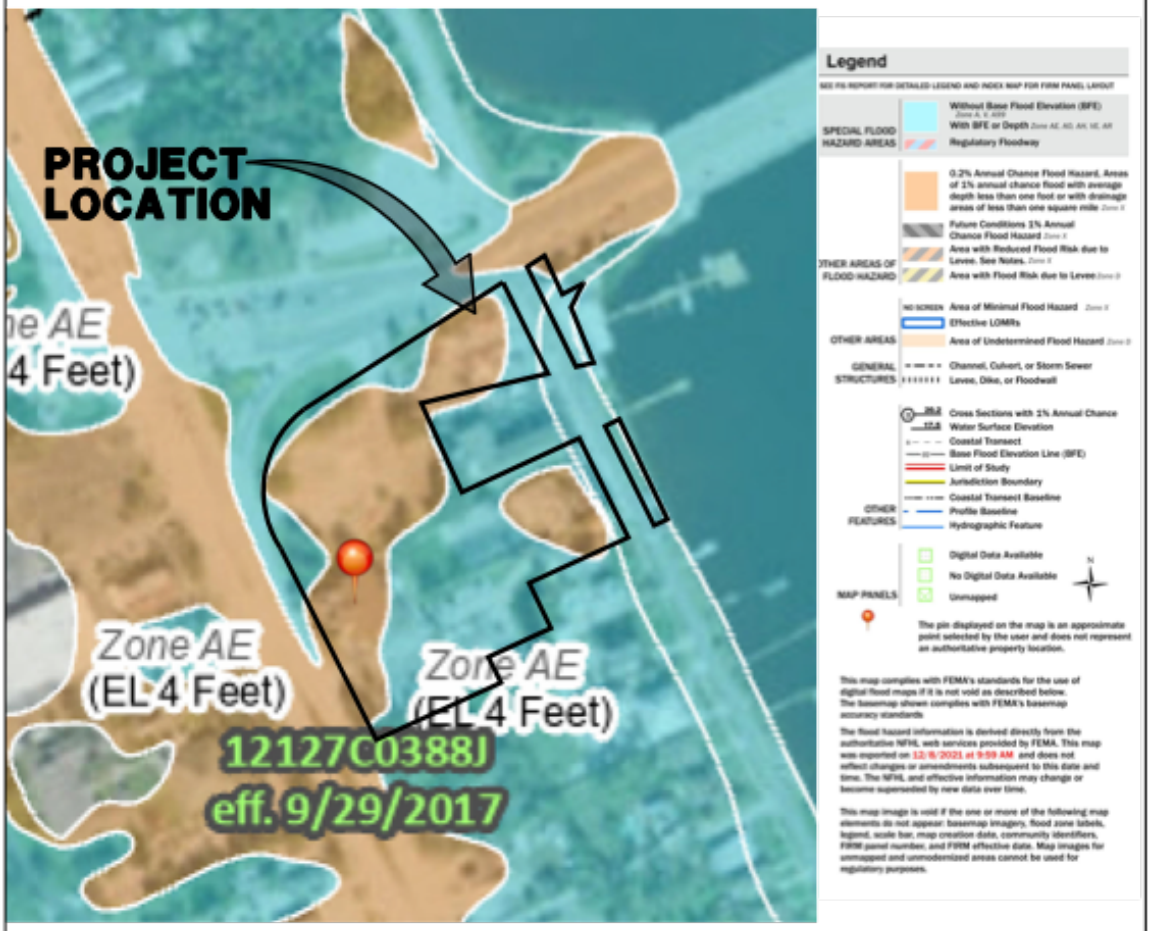

FEMA FLOOD MAP

ZONES = X AND AE

MAP EFFECTIVE DATE 09/29/17

SCALE: 1" = 200'

PARKER MYNCHENBERG
& ASSOCIATES, INC.
PROFESSIONAL ENGINEERS * LANDSCAPE ARCHITECTS
1729 RIDGEWOOD AVENUE HOLLY HILL, FLORIDA 32117
(386) 677-6891 FAX (386) 677-2114 E-MAIL: info@parkermynchenberg.com
PARKER MYNCHENBERG P.E. #32645 R.L.A. #0001553, STEVE BUSWELL P.E. #53985 R.L.A. #LA6667011
CERTIFICATE OF AUTHORIZATON NUMBER 00003910

Exhibit “C”

General Appearance of Mobile Commercial Unit

Exhibit "D"
Catfish Commons Parking Allocation

Total Proposed Parking Provided per CDP

4009 Halifax Drive…63
4085 Ridgewood Avenue…77 (including new 3 story office/residential building site at 4147 Ridgewood Avenue)
4108 Halifax Drive…5
4075 Ridgewood Avenue…40
4084 Halifax Drive…35

Total Spaces Provided…220

Parking Required by Code per proposed use

Aunt Catfish's (4009 Halifax Drive)…88 (228 seats + 24employees)

La Cantina…38 (4085 Ridgewood Avenue) (100 seats + 10 employees)

Loft Apartment…1 (4106 Halifax Dr)

Mobile Commercial…3 (4085 Ridgewood Avenue and 4084 Halifax Drive)

Office w/ 4 residential units above…8 (4147 Ridgewood Avenue) (1.5 per 805 square feet and 1 per residential unit)

Marina…8 (4084 and 4108 Halifax Drive) (1 parking space per 3 boat slips)

4075 Ridgewood multi-tenant commercial building (1 per 250 square feet)…35

Residential…8 (4084 Halifax Drive) 1 per unit

Commercial…6 (4084 Halifax Drive) 3 per unit

Restaurant…28 (4084 Halifax Drive) 1 per 3 seats and 1 per 2 employees (72 seats + 8 employees)

Total Spaces Required by Code…223

Overall Parking provided for all properties located within the Catfish Commons PCD falls under the Land Development Code Chapter 12, Section 4, item 3 (d) Reduction for mixed or joint use of parking spaces.

Exhibit "E"

Sign Design Options

Note: The Sign Design Options included are conceptual only and are intended to provide general examples of commercial signage that compliments and coordinates with the residential appearance of Halifax Drive. Final design drawings will be submitted for permitting at a later date.

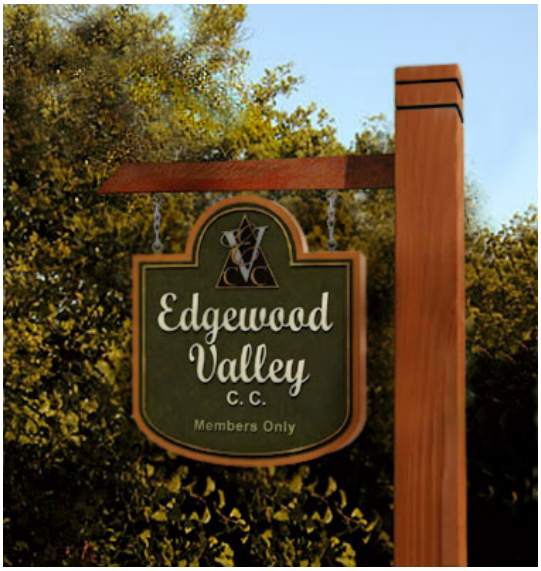

Exhibit “F”
Landscape Curb into Parking Space

GRAPHIC SCALE

0 10 20 40 60

SCALE: 1" = 20'

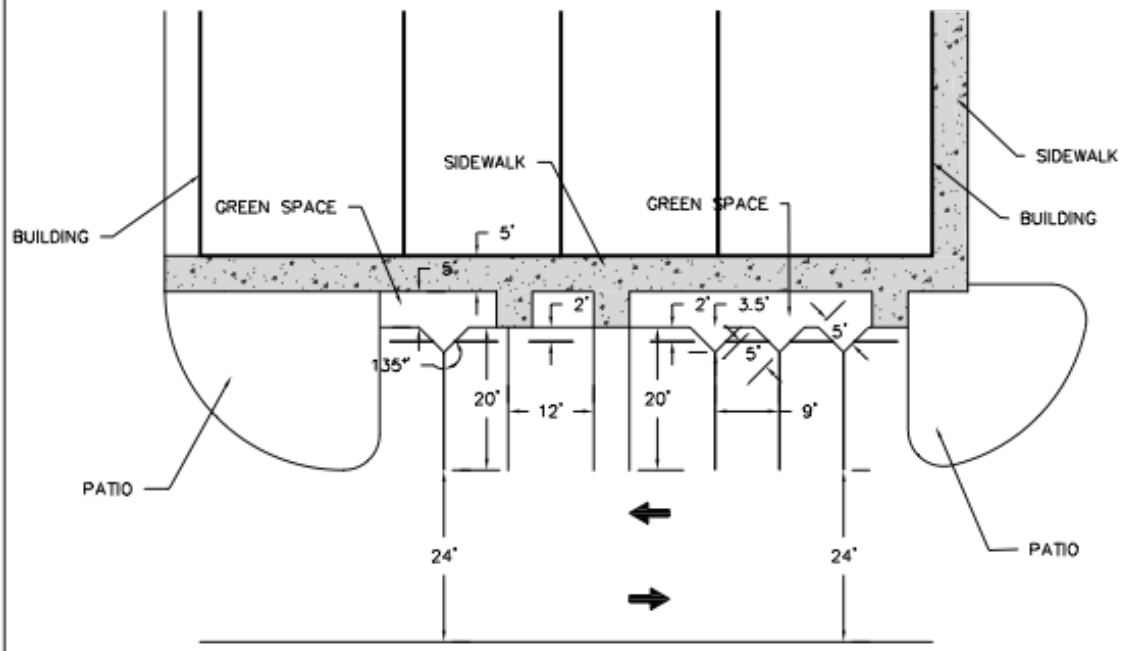

PARKER MYNCHENBERG
& ASSOCIATES, INC.
PROFESSIONAL ENGINEERS * LANDSCAPE ARCHITECTS
1729 RIDGEWOOD AVENUE HOLLY HILL, FLORIDA 32117
(386) 677-6891 FAX (386) 677-2114 E-MAIL: info@parkermynchenberg.com
PARKER MYNCHENBERG P.E. #32645 R.L.A. #0001553, STEVE BUSWELL P.E. #53985 R.L.A. #LA6667011
CERTIFICATE OF AUTHORIZATON NUMBER 00003910

Exhibit “G”

[redacted]

[redacted]

DAYTONA
SALT AIR AND SAND
SINCE 1960
BEACH SHORES

[redacted]

[redacted]

Exhibit “H”

Exhibit "I

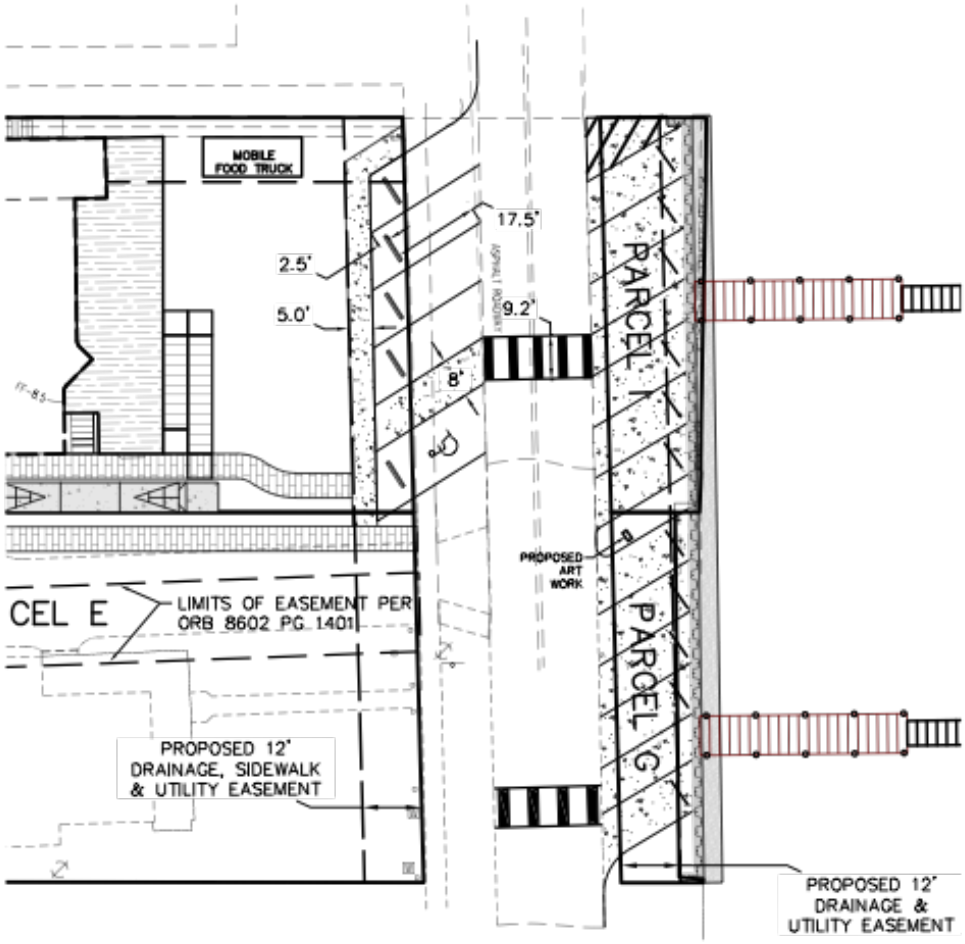

GRAPHIC SCALE

0 15 30 60 90

SCALE: 1" = 30'

CATFISH COMMONS
MASTER DEVELOPMENT AGREEMENT

PARKER MYNCHENBERG & ASSOCIATES, INC.
PROFESSIONAL ENGINEERS * LANDSCAPE ARCHITECTS
1729 RIDGEWOOD AVENUE HOLLY HILL, FLORIDA 32117
(386) 677-6891 FAX (386) 677-2114 E-MAIL: info@parkermynchenberg.com
CERTIFICATE OF AUTHORIZATION NUMBER 00003910

EXHIBIT I
01.10.2025

STAFF REPORT

Planned Commercial Development Rezoning & Second Restatement of the Catfish Commons Master Development Agreement and Conceptual Development Plan
CASE NO. PRZA-24-0008

REQUEST:	Rezone +/- 0.58 acres to Planned Commercial Development (PCD) and approve the Second Restatement to the Catfish Commons PCD Master Development Agreement (MDA) and Conceptual Development Plan (CDP).
LOCATION:	4009, 4084, 4106, and 4108 Halifax Drive and 4075, 4085, and 4147 Ridgewood Avenue (Location Map - Figure 1)
PROPERTY OWNERS AND APPLICANTS:	Brendan and Shannon Galbreath, Halifax 4084 LLC, and Commons 4075 LLC
STAFF CONTACT:	Penelope Cruz, Planning Manager (386) 506-5671
STAFF RECOMMENDATION:	Approval
PLANNING COMMISSION:	Recommended Approval 7-0 (February 27, 2025)
CITY COUNCIL:	March 18, 2025

INTRODUCTION

The property owners are requesting to rezone ±0.58 acres from Community Commercial (CC) to Planned Commercial Development (PCD) and add the ±0.58 acres into the existing Catfish Commons Planned Commercial Development (PCD), along with approval of the Second Restatement of the Catfish Commons PCD Master Development Agreement (MDA) and Conceptual Development Plan (CDP). The current PCD area is ±3.4 acres. If approved, the overall area of the PCD would expand to ±4.0 acres, and the Second Restatement of the MDA would provide the framework for development within the expanded PCD.

Figure 1. Location Map

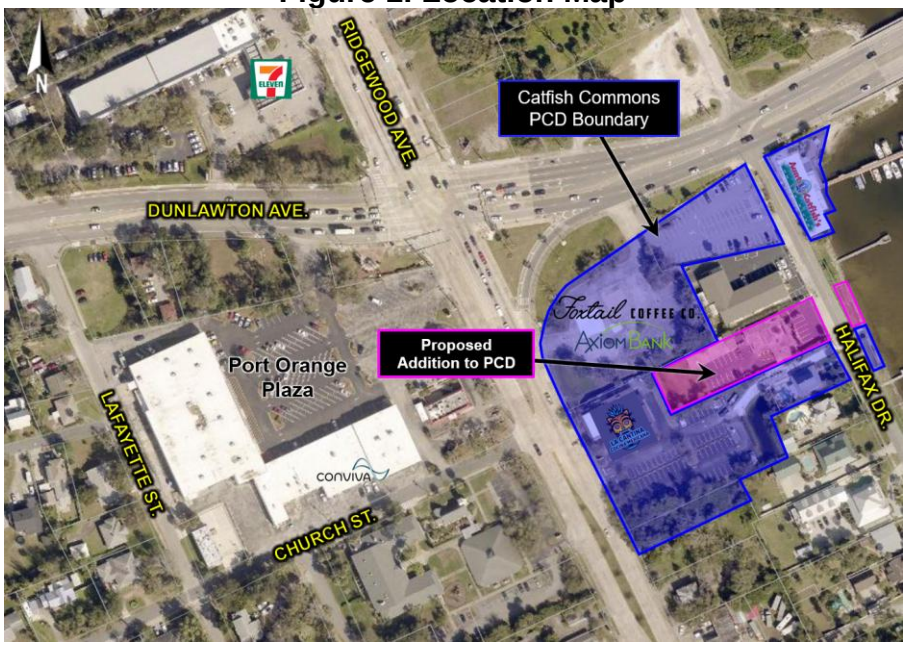

DISCUSSION

The proposed Second Restatement to the Catfish Commons Master Development Agreement (MDA) and Conceptual Development Plan (CDP) would establish the following (See Exhibit 1 – Second Restatement to the Catfish Commons MDA and CDP):

1. Maintain the existing development requirements for 4106 and 4108 Halifax Drive and 4075, 4085, and 4147 Ridgewood Avenue. **These properties are already within the PCD, and the proposed restatement does not change any of the requirements or allowed uses for these properties.**
2. Add 4084 Halifax Drive (former Maloney Funeral Home site) into the PCD and provide the framework to redevelop the property with a mixed-use building with commercial uses on the first floor and up to eight residential units above and a 12-slip marina with on-street parking along Halifax Drive; and
3. Maintain the existing development parameters for 4009 Halifax Drive (Aunt Catfish's restaurant) and allow up to two residential units to be developed above the restaurant.

According to the property owners, the request for the Second Restatement of the MDA and CDP is to add property into the PCD, allow for mixed-use developments with residential units above commercial, and create a cohesive development that utilizes existing infrastructure on the developed properties, including buildings, parking, driveways, and utilities and provides opportunity for new development within the PCD with additional connection points into and between the properties within the PCD.

A Future Land Use (FLU) Amendment (Case No. CPAM-24-0003) to change the FLU designation at 4009 and 4084 Halifax Drive from *Commercial* to *Mixed-Use Center* is being processed concurrently to support the development in the proposed *Second Restatement of the MDA and CDP.*

The surrounding land uses, FLU designations, and zoning classifications are identified in Table 1.

Table 1. Surrounding Land Uses, FLU Designations, and Zoning Districts

4009 Halifax Drive			
Direction	**Existing Land Use**	**FLU Designation**	**Zoning District**
North	Dunlawton Ave. right-of-way	*N/A*	N/A
South	Multi-Family Apartments	*Commercial*	Ridgewood Development (RD)
East	Halifax River	*N/A*	N/A
West	Commercial	*Commercial*	Planned Commercial Development (Catfish Commons PCD)

4084 Halifax Drive			
Direction	**Existing Land Use**	***FLU Designation***	**Zoning District**
North	Commercial and Multi-family Residential	*Commercial*	Planned Commercial Development (Catfish Commons PCD) and Ridgewood Development (RD)
South	Single-family Residential & Commercial	*Commercial & Mixed-Use Center*	Planned Commercial Development (Catfish Commons PCD)
East	Halifax River	*N/A*	N/A
West	Commercial	*Mixed-Use Center*	Planned Commercial Development (Catfish Commons PCD)

The current and proposed FLU designations and zoning classifications are depicted in Figures 2 and 3.

Figure 2. Current and Proposed FLU Map

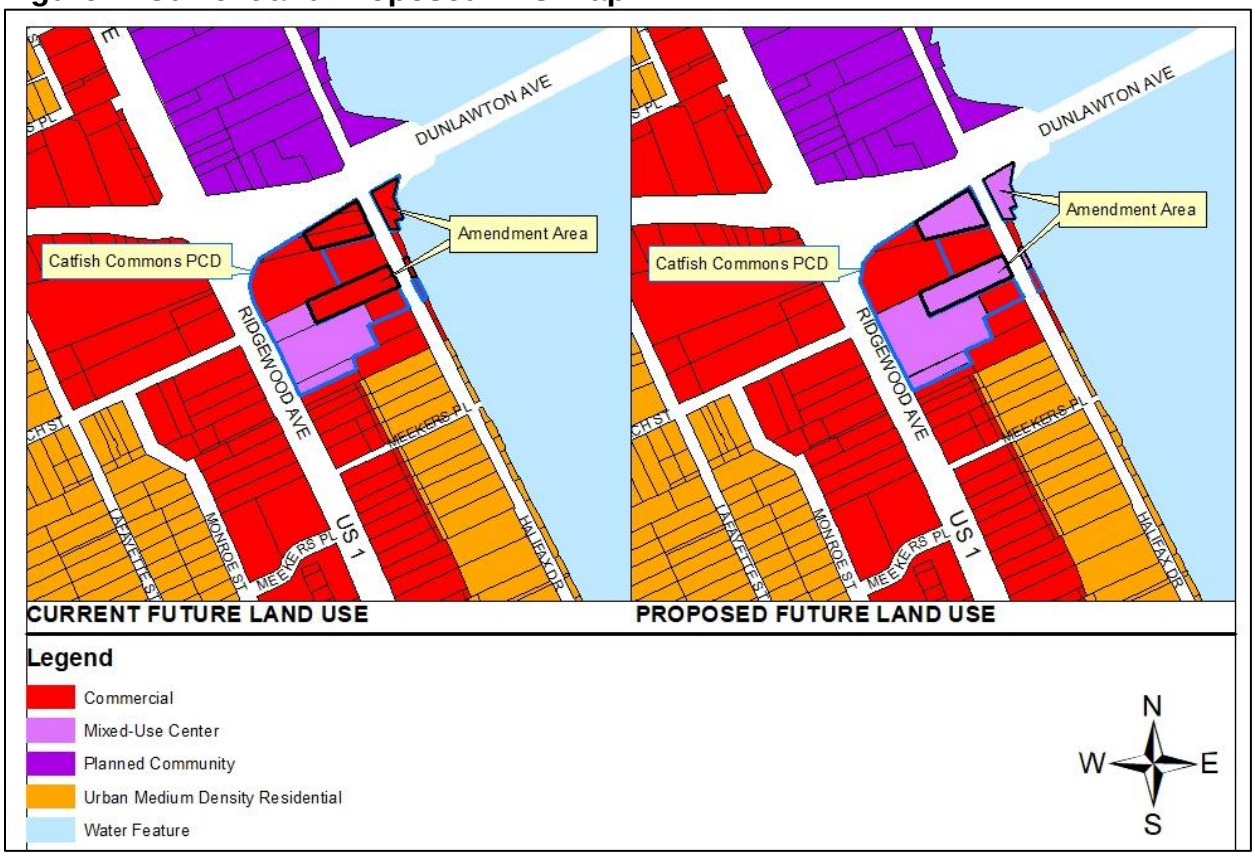

Figure 3. Current and Proposed Zoning Map

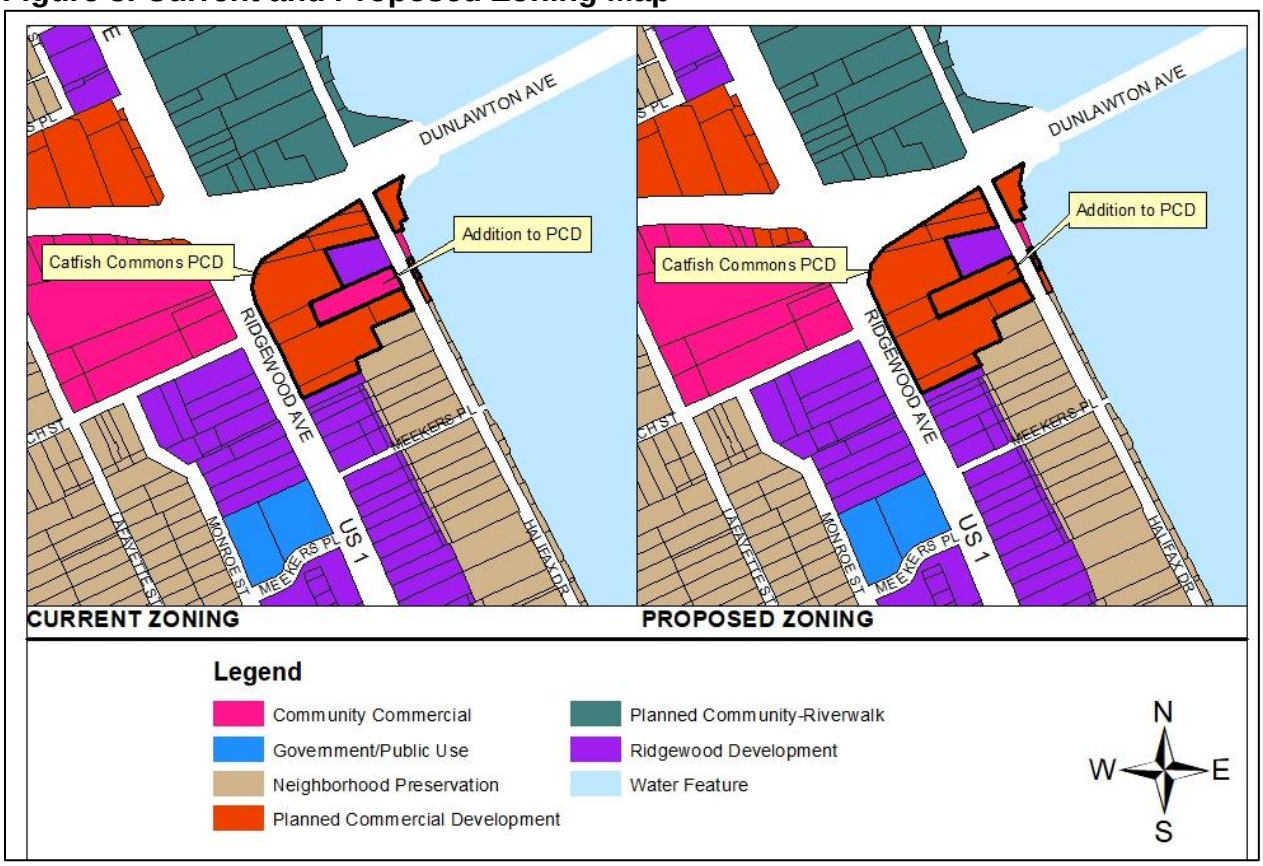

Any future development within the PCD will require development plans to be submitted and a detailed technical review by the Development Review Committee (SDRC) to determine that all requirements in the Land Development Code (LDC) and the Catfish Commons PCD MDA and CDP are met and the marina will also be required to comply with the Volusia County Manatee Protection Plan, Florida Department of Environmental Protection, and any other applicable local, state, and federal laws. As with all development, specific site development proposals for the subject property are subject to concurrency regulations at the time of development, requiring transportation facilities to be provided or for the developer to enter into a mitigation agreement for their impacts.

DEVELOPMENT PROPOSAL

The following discussion will focus on the significant aspects of the Second Restatement to the Catfish Commons MDA and CDP, such as general site layout, access, parking dimensional requirements, landscape buffers, utilities, and drainage areas. Planned Commercial Development (PCD) zoning, rather than conventional zoning, is used to create a cohesive development with efficient site and infrastructure design that allows flexibility in building setbacks, off-site signage, and parking. However, as is typical with PCDs, there are deviations from the LDC as part of the proposed Second Restatement to the Catfish Commons MDA and CDP, which are further discussed in the report.

Figure 4. Proposed Conceptual Development Plan (See Exhibit 1 for full size plan)

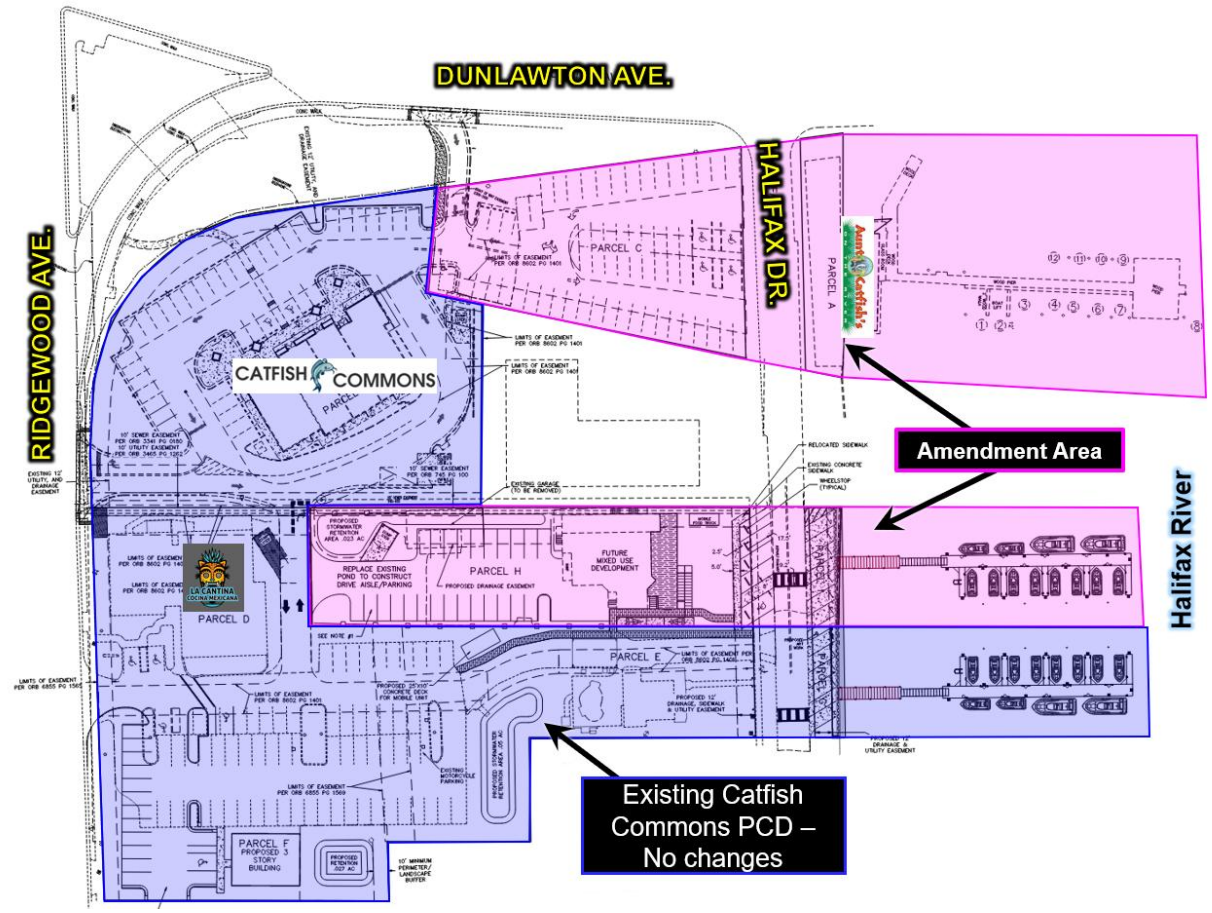

Dimensional Requirements

There are **no changes** to the previously approved dimensional requirements for the properties already part of the Catfish Commons PCD as part of the Second Restatement to the Catfish Commons MDA and CDP. The proposed Restated MDA provides the dimensional requirements for redeveloping 4084 Halifax Drive.

Table 2. Dimensional Requirements Comparison

Zoning	Dimensional Criteria					
	Front	Side	Rear	Maximum Building Height	Minimum Open Space	Maximum Building Coverage
Catfish Commons MDA – 4084 Halifax Drive	20 feet	North – 5 feet for new construction and 4 feet for existing structures South – 0 feet ((internal lot line)	0 feet (internal lot line)	45 feet	30%	35%
Ridgewood Development District	10 feet	15 feet	25 feet	45 feet	20%	35%

To redevelop the site with a new structure, the applicants are requesting the rear and south side setbacks be equal to 0 feet, the north setback be equal to 5 feet, and the front setback be equal to 20 feet. According to the applicants, the proposed setbacks for a new structure provide more flexibility for building placement when redeveloping a small infill property. For any structure built on the subject property or adjacent property, sufficient building separation requirements in the Florida Building Code (FBC) and Florida Fire Prevention Code would need to be met.

The Restated MDA also considers the repurposing of the existing building constructed in 1925 and establishes the setbacks for the existing building. According to the applicants, establishing the setbacks for the existing building allows it to be a conforming structure, and it can be expanded vertically (height) or toward the front or rear of the subject property. *Allowing the side and rear setbacks listed in Table 2 – Page 5 for 4084 Halifax Drive is a policy issue.*

Permitted Uses

There are **no changes** to the previously approved allowed uses for the properties already part of the Catfish Commons PCD as part of the Second Restatement to the Catfish Commons MDA and CDP. The proposed Second Restatement allows the same uses allowed in the City's Mixed-Use Center (MXU) zoning district to be developed at 4009 and 4084 Halifax Drive, which includes a combination of commercial, office, marina, and residential uses (Exhibit 2 – Uses allowed in the MXU district). The allowed uses for 4009, and 4084 Halifax Drive are consistent with the FLU designation for these properties.

The Second Restatement to the MDA and CDP provides the following density/intensity restrictions:

- Limits the number of residential units for 4009 Halifax Drive to a maximum of two (2) units.
- Limits the number of residential units for 4084 Halifax Drive to a maximum of eight (8) units. Limits the number of boat slips for 4084 Halifax Drive to 12 and prohibits overnight live-aboard vessels and the sale of gas.

Parking and Access

There are **no changes** to the parking or driveway requirements for the PCD with this Second Restatement to the Catfish Commons MDA and CDP, except a request to allow parking spaces along the east and west side of the Halifax Drive right-of-way that back out onto Halifax Drive for 4084 Halifax Drive. For the property located at 4084 Halifax Drive, the applicants are requesting to maintain the existing parking spaces along the west side of 4084 Halifax Drive that back directly onto a right-of-way and allow for parking spaces to be built on the east side of the Halifax Drive that back directly onto a right-of-way. The LDC does not permit parking spaces to back directly onto a right-of-way.

The applicants are proposing six (6) parking spaces on the east side of Halifax Drive to serve the future marina at 4084 Halifax Drive and to maintain the five (5) parking spaces on the west side of Halifax Drive that back directly onto Halifax Drive to serve the mixed-use development at 4084 Halifax Drive. Halifax Drive is a local, two-lane road with a posted speed limit of 25 MPH. The proposed parking spaces will be angled to provide

sufficient visibility for a vehicle exiting the parking spaces, and the space spaces will be accessed from the adjacent roadway.

As part of the MDA Amendment approved in 2022 for the Catfish Commons PCD, parking spaces that backed out onto Halifax Drive were approved to be built with the development of a marina at 4108 Halifax Drive (property south of 4084 Halifax Drive). According to the applicants, the marina spaces (east side of Halifax Drive) are not anticipated to be high-turnover spaces where vehicles continuously enter and exit; instead, vehicles are likely to park once for the day or half-day. *Allowing parking spaces that require a vehicle to back out directly onto the Halifax Drive right-of-way is a policy issue.*

Figure 6. Existing and Proposed Parking at 4084 Halifax Drive

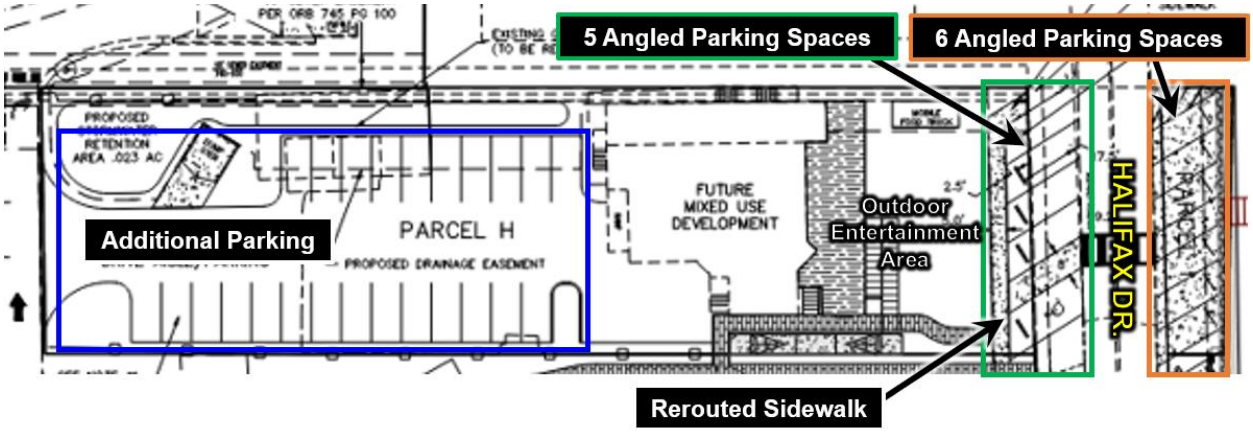

Landscaping

There are **no changes** to the landscape requirements for the PCD as part of the Second Restatement to the Catfish Commons MDA and CDP, except a request to waive the 10-foot right-of-way landscape buffer for 4084 Halifax Drive and the 5-foot north side buffer if the existing building is repurposed.

According to the LDC, a 10-foot landscape buffer is required along the east and west sides of Halifax Drive right-of-way at 4084 Halifax Drive. Similar to the landscape buffer requirement waived for 4009 Halifax Drive and 4106/4108 Halifax Drive as part of the approval for the 1st Restated MDA, the applicants are requesting to waive the Halifax

Drive roadway buffer on the west and east sides of 4084 Halifax Drive. As discussed above, the applicants are requesting approval to construct parking spaces that back out into Halifax Drive, and if approved, the parking spaces along Halifax Drive will prevent the landscape buffer from being installed.

The applicants are requesting a varied-width landscape buffer along the north property line ranging in width from 4 feet to 5 feet. Currently, the LDC requires a 5-foot landscape buffer along the north property line. The applicants are requesting a reduced landscape buffer to maintain the existing building, which is set back 4 feet from the north property line. According to the applicants, the required side buffer cannot be met if the existing building is repurposed. The applicants also proposed to provide space for an entertainment area in front of the building with an enlarged covered front deck, a game yard, and a mobile food truck (see Figure 6). According to the applicants, some of the buffers could be installed east of the existing building, but that would require the proposed outdoor entertainment area to be reduced. The applicants are proposing to provide landscape plantings that are appropriately sized and located within the existing north property line buffer area. *Waiving the 10-foot landscape buffer requirement along Halifax Drive and allowing a varied-width buffer on the north side is a policy issue.*

Figure 7. Existing Conditions

Architecture

There are **no changes** to the architecture requirements for the PCD with the Second Restatement to the Catfish Commons MDA and CDP. The architecture style for the PCD is a Florida Vernacular style with features such as metal roofs, hardiboard siding, and other decorative elements typical of coastal architecture. All new buildings built in the PCD will be designed to comply with the Florida Vernacular architecture style along with the architectural standards in the LDC for non-residential buildings. Existing buildings within the PCD will remain in their current state, but if these existing buildings are redeveloped, the exterior will need to comply with the Florida Vernacular architecture style and the architectural standards in the LDC for non-residential buildings.

Signage

There are **no changes** to the signage requirements for the PCD Second Restatement to the Catfish Commons MDA and CDP. Signage within PCD will comply with the signage requirements of the LDC or prior approved signage requirements as part of the Catfish Commons PCD.

Fee Waiver

There are no changes to the previously approved language in the MDA that allow for the waiver of all city development review application submittal, site inspection, building permit, building inspection, and fees for future Comprehensive Plan Amendments, MDA Amendments, and all development-related applications within Catfish Commons PCD excluding impact fees, water and sewer development fees, and stormwater special assessment fees. However, the Restated MDA extends the period for this waiver to 5 years from the recording date of the subject Restatement.

CONSISTENCY WITH THE COMPREHENSIVE PLAN

A Future Land Use (FLU) Amendment (Case No. CPAM-24-0003) is being processed concurrently with the subject PCD rezoning and MDA restatement application to change the FLU designation at 4084 Ridgewood Avenue and 4009 Ridgewood Avenue from *Commercial* to *Mixed-Use Center* to allow for a mixed-use building with commercial uses on the first floor and up to eight residential units above and a 12-slip marina on 4084 Halifax Drive and to allow for the addition of two residential units above the existing Aunt Catfish's restaurant at 4009 Halifax Drive. The remaining portion of the PCD area has a FLU designation of *Commercial*. The PCD is compatible with the current *Commercial* FLU and Mixed-Use Center FLU designations.

The proposed PCD rezoning and restated MDA is generally consistent with the intent of the Goals, Objects, and Policies of the Comprehensive Plan and supports infill redevelopment of parcels within an existing built commercial area that is already served by public infrastructure (water, sewer, roads, and schools). The proposed PCD is also consistent with the Ridgewood Corridor Plan as it promotes the redevelopment of properties in one of the identified Waterfront Linkage Zones, a long-term strategy listed in the plan (Figure 8). The proposed MDA and CDP will allow for a cohesive redevelopment, create additional cross-access between parcels, and provide opportunities for new businesses, which are also strategies identified in the plan.

Figure 8. Waterfront Linkage Zone from Ridgewood Corridor Plan

POLICY ISSUES

Three (3) requested deviations from the Land Development Code (LDC) in the proposed Restated MDA are discussed in detail above in the staff report discussion. The PCD zoning district allows the applicants to request flexibility from standard code requirements for unique and/or innovative design. The Planning Commission and City Council will need to consider the following policy issues requested by the applicants:

1. Allow the side and rear setbacks listed in Table 2 – Page 5 for 4084 Halifax Drive.
2. Allow parking spaces that require a vehicle to back out directly onto the Halifax Drive right-of-way.
3. Allow the 10-foot landscape buffer requirement along Halifax Drive to be waived and allow a varied-width buffer on the north side.

PUBLIC NOTICE

On January 10, 2025, staff posted the property, notifying the public of the proposed amendment. The proposed amendment has also been advertised in the News-Journal pursuant to Florida Statutes. As of the time this agenda item was prepared, staff has received one (1) inquiry regarding the proposed amendment.

RECOMMENDATION

Staff recommends approval of the rezoning of 4084 Halifax Drive from Community Commercial (CC) to Planned Commercial Development (PCD), and approval of the Second Restatement of the Catfish Commons PCD Master Development Agreement (MDA) and Conceptual Development Plan (CDP), subject to the approval of Future Land Use Amendment Case No. CPAM-24-0008, and subject to the three (3) policy issues:

1. Allow the side and rear setbacks listed in Table 2 – Page 5 for 4084 Halifax Drive.
2. Allow parking spaces that require a vehicle to back out directly onto the Halifax Drive right-of-way.
3. Allow the 10-foot landscape buffer requirement along Halifax Drive to be waived and allow a varied-width buffer on the north side.

ATTACHMENTS

Exhibit 1 – Second Restated Catfish Commons Master Development Agreement and Conceptual Development Plan
Exhibit 2 – Permitted Uses for the Mixed-Use Center (MXU) Zoning District

SECOND RE-STATED MASTER DEVELOPMENT AGREEMENT CATFISH COMMONS PLANNED COMMERCIAL DEVELOPMENT

THIS SECOND RE-STATED MASTER DEVELOPMENT AGREEMENT CATFISH COMMONS PLANNED COMMERCIAL DEVELOPMENT ("MDA") is entered into between the City of Port Orange, a Florida municipal corporation, having a mailing address of 1000 City Center Circle, Port Orange, Florida 32129 (hereinafter the "City"); and Brendan and Shannon Galbreath (husband and wife), having a mailing address of 4190 Halifax Drive, Port Orange, Florida 32127; and Commons 4075, LLC having a mailing address of 4190 Halifax Drive, Port Orange, Florida 32127 and Halifax 4084, LLC having a mailing address of 4190 Halifax Drive, Port Orange, Florida 32127 (the "Owner & Developer"), who hereby agree and covenant and bind their successors and assigns as follows:

WHEREAS, The City and Owner & Developer have previously entered into a Master Development Agreement for Catfish Commons Planned Commercial Development recorded in Official Record Book 6784, Page 970 ("Original MDA") as amended by the First Amendment to the Master Development Agreement for Catfish Commons Planned Commercial Development recorded in the Official Record Book 7684, Page 3350 ("First Amendment") as restated with a Re-Stated Master Development Agreement for Catfish Commons Planned Commercial Development recorded in Official Record Book 8278, Page 3843 (Restated MDA"), as amended by the First Amendment to the Restated Master Development Agreement for Catfish Commons Planned Commercial Development recorded in Official Record Book 8583, Page 4586 ("First Amendment to Restated MDA") all in Public Records, Volusia County, Florida; and

WHEREAS, the Parties hereto intend for this Second Re-stated Master Development Agreement Catfish Commons Planned Commercial Development to be an amendment to and restatement of, and shall supersede and replace the Original MDA, the First Amendment, the Restated MDA, and the First Amendment to Restated MDA .

NOW, THEREFORE, the City and Owner & Developer do hereby agree as follows:

1. **THE PROPERTY**
   The property that is subject to this Agreement consists of approximately 3.98 acres of real property located at 4009 Halifax Drive (Parcels 6303-11-01-0022 and 6303-11-01-0030) Parcels A and C, 4075 Ridgewood Avenue (Parcel 6303-11-01-0012) Parcel B, 4085 Ridgewood Avenue (Parcel 6341-04-05-0020) Parcel D , 4106 and 4108 Halifax Drive (Parcel 6341-04-05-0050) Parcels E and G, 4147 Ridgewood Avenue (Parcel 6341-04-03-0010) Parcel F, and 4084 Halifax Dr. (6314-04-05-0010) Parcel H, all within the municipal limits of the City of Port Orange and described on Exhibit "A", which is attached hereto and by reference made a part hereof (the "Property").

2. **CONFORMANCE WITH COMPREHENSIVE PLAN**
   The City has determined that the Property is suitable in size, location and character for the uses proposed, that the uses proposed meet the needs of the City, and that the uses proposed are consistent with the City's Comprehensive Plan as of the date of adoption of this Agreement enacting the zoning provided herein.

3. **DEVELOPMENT**
   The Property shall generally be developed as a multi-tenant commercial and office project, with a long term residential component, short term "vacation rental" residential component, event venue and boat slips for rent to motorized boats and other water based activities, subject to permitting and compliance with the City's Land Development Code and the Volusia County Manatee Protection Plan, except where specifically deviated from in this PCD, as depicted on the Conceptual Development Plan ("CDP") prepared by Parker Mynchenburg and Associates, which is attached hereto and incorporated herein as Exhibit "B" and as more particularly described below.

4. **DEVELOPMENT AGREEMENT AND CONCEPTUAL DEVELOPMENT PLAN**
   A. Development of the Property shall be controlled by the terms and conditions of this Master

Development Agreement (the "Agreement") and the CDP, which is attached hereto and incorporated herein as Exhibit "B". The CDP generally depicts the planned layout of improvements to the Property. Collectively, this Agreement and the CDP for the Property may be referred to as the "Plan". In case of conflict between any textual provision of this Agreement and the CDP, the textual provision of this Agreement shall control. If the Agreement is silent regarding a particular subject or requirement, such silence shall not be construed as a conflict with the CDP. Except as otherwise provided in this Agreement, in the event of a conflict between the terms and provisions of the Plan and the City's ordinances, the requirements of the City's ordinances shall control. If the Plan fails to address a particular subject or requirement, the requirements of the applicable City ordnance(s) as defined by the Land Development Code of the City of Port Orange, Florida ("LDC"), shall control.

B. The parties acknowledge that compliance with the environmental preservation requirements of the LDC may necessitate modifications of the CDP. In the event modifications to comply with the LDC are required, and modifications to the CDP are not in conflict with the textual provisions of this Agreement and LDC requirements are not superseded by this Agreement, the modifications shall be deemed "minor" and may be approved without formal amendment of this Agreement. Minor modifications shall require the written approval by the Administrative Official, who is defined in the LDC. If the Owner & Developer is not satisfied with the suggested resolution or the decision of the City Administrative Official categorizing the modifications as minor or major, the Owner & Developer may appeal the decision to the Planning Commission. Appeals from the Planning Commission may be made to the City Council.

C. An administrative variance from the dimensional requirements in this MDA may be granted when such variance would be equal to or less than ten percent of the required dimension, when deemed appropriate by the Administrative Official, who is defined in the LDC. Application for administrative variances from the dimensional requirements shall be made on the appropriate forms provided by the Community Development Department for that purpose.

5. PERMITTED USES

A. 4009 Halifax Drive (6303-11-01-0022 and 6303-11-01-0030) Parcels A and C
Uses allowed within the Mixed Use Center ("MXU") zoning district and 2 Residential Units (Long Term or Short Term) shall be permitted.

B. 4075 Ridgewood Avenue (Parcel 6303-11-01-0012) Parcel B
Uses allowed within the Ridgewood Development ("RD") zoning district shall be permitted, along with one restaurant/food service with a drive thru.

C. 4085 Ridgewood Avenue (Parcel 6341-04-05-0020) Parcel D
Uses allowed within the Mixed Use Center ("MXU") zoning district, bike and run race staging (Special Events would need approval per the Code of Ordinances) and Mobile Commercial (for commercial uses as identified in the Mixed Use Center ("MXU") zoning district, see Exhibit "C") shall be permitted.

D. 4147 Ridgewood Avenue (Parcel 6341-04-03-0010) Parcel F
Uses allowed within the Mixed Use Center ("MXU") zoning district shall be permitted, with a maximum of 4 residential units.

E. 4106 Halifax Drive (above drive thru feature) (Parcel 6341-04-05-0050) Parcel E
One residential rental unit with no minimum or maximum rental time period to be occupied only by the business owner or manager of a business located within the PCD Property.

F. 4108 Halifax Drive (Parcel 6341-04-05-0050) Parcel E and G
The square-footage for uses within this structure is limited to the 1st floor until all the properties located on Halifax Drive, between 4108 Halifax Dr. and Meeker Place have been rezoned to a commercial or mixed-use zoning district*

- Single family residence**
- Restaurant – No Drive-thru

- Ice cream shop
- Retail
- Professional and medical office
- Bed and breakfast inn
- 12 slip Marina for Motorized watercraft slip rental and water related activities***

G. 4084 Halifax Drive (Parcel 6341-04-05-0010) Parcel H and I

- Uses allowed within the Mixed Use Center ("MXU") zoning district
- 8 Residential Units (Long Term or Short Term)
- 12 slip Marina for Motorized watercraft slip rental and water related activities***
- Event Venue
- Mobile Commercial (for all commercial uses as identified in the Mixed Use Center ("MXU") zoning district, see Exhibit "C")

* The existing single-family dwelling at 4108 Halifax Dr. is a non-confirming use and will be subject to the provisions regarding non-conforming uses and structure outline in Chapter 3 of the LDC.

** Special owner-occupancy provisions. The City shall permit given business owners/managers to reside in a dwelling unit which is set within the principal (business establishment) structure, provided these establishments comply with all other requirements of the LDC and adopted building and fire codes.

*** Marina dock will be allowed to extend more than 100ft from the Halifax Drive bulkhead subject to the Volusia County Manatee Protection Plan and Florida Department of Environmental Protection permitting.

6. DIMENSIONAL REQUIREMENTS

Maximum Building Coverage of Total PCD Area: 35%
Minimum Open Space of Total PCD Area: 30%
Maximum Floor Area Ratio (FAR) of Total PCD: 1.0
Minimum Building Setbacks, Maximum Building Heights, and Drive Aisle Widths:

4009 Halifax Drive (Parcels 6303-11-01-0022 and 6303-11-01-0030) Parcels A and C
Dunlawton Avenue -0' **
East of Halifax Drive -0' **
West of Halifax Drive -0' **
Side -0' **
Maximum Height -45'

4075 Ridgewood Avenue (Parcel 6303-11-01-0012) Parcel B
Ridgewood Avenue -12'
Dunlawton Avenue -20'
Rear -10'
Side -10'
Maximum Height -45'

4085 Ridgewood Avenue (Parcel 6341-04-05-0020) Parcel D
Ridgewood Avenue -10'
Rear -10'
Side -10'
Maximum Height -45'

4147 Ridgewood Avenue (Parcel 6341-04-03-0010) Parcel F
Ridgewood Avenue -
12' Rear – 10'***
South Side -10'
North Side - 0'

Maximum Height -45’

4106/4108 Halifax Drive (Parcel 6341-04-05-0050) Parcels E and G
West of Halifax Dr – 40’*
East of Halifax Dr – 0’
North side of Entry Feature - 2.5’
South Side -5’***
Rear -10’ ***
Rear of Entry Feature - 8’
Maximum Height - 35’
Driveway Setback - 5’
Marina Pier Access – 15’ from side property lines
One Way Driveway Width - 10’

4084 Halifax Drive (Parcel 6341-04-05-0010) Parcel H and I
West of Halifax Dr – 20’
East of Halifax Dr – 0’
North Side - 5’ for new construction and 4’ for existing structures
South Side - 0’
Rear -0’
Maximum Height - 45’
Marina Pier Access – 15’ from side property lines
(See Exhibit “H” for reference)

*Setback may be reduced to 10’ once all the properties located on Halifax Drive, between Dunlawton Avenue and Meeker Place have been rezoned to commercial or mixed-use zoning district
**Setback takes into account the 4009 Halifax Drive existing building location and is designed to allow that as well as the parking lot at 4009 Halifax Drive to remain in its current location without change
***Commercial building rear setbacks adjoining residential zoning shall be equal to or greater than the building height
****Parcels D and F are proposed to be combined via Unity of Title or lot combination. The internal lot line will be eliminated and the proposed building on Parcel F may encroach onto Parcel D

7. MAINTENANCE OF COMMON AREAS AND AMENITIES

The owner of parcel 6303-11-01-0022, their successors and assigns shall be jointly and severally responsible for the maintenance of the common facilities of the Property. A declaration of covenants and restrictions addressing the obligations and rights of all the Property subject to this MDA shall be required at the time of site plan submittal.

8. LANDSCAPE BUFFER AND OPAQUE SCREENING

4009 Halifax Drive (Parcels 6303-11-01-0022 and 6303-11-01-0030)
Dunlawton Avenue -0’*
East of Halifax Drive -0’*
West of Halifax Drive -0’*
Rear -0’*
Side -0’*

4075 Ridgewood Avenue (Parcel 6303-11-01-0012)
Ridgewood Avenue -10’
Dunlawton Avenue -3’
Rear -5’
Side -1’ minimum, average of 5’

4085 Ridgewood Avenue (Parcel 6341-04-05-0020)
Ridgewood Avenue -10'
Rear -5'
Side -5'

4147 Ridgewood Avenue (Parcel 6341-04-03-0010)
Ridgewood Avenue -10'
Rear -10'
Side -5'

4106/4108 Halifax Drive (Parcel 6341-04-05-0050)
West of Halifax Dr - 10'
East of Halifax Dr - 0'
Rear - 0'
North Side - 2.5'
South Side -5'

4084 Halifax Drive (Parcel 6341-04-05-0010)
West of Halifax Dr - 0'
East of Halifax Dr - 0'
Rear - 0'
North Side - 5' for new construction and 0' for existing structures
South Side - 0'

*Landscape buffer takes into account the 4009 Halifax Drive existing building location and is designed to allow that as well as the parking lot at 4009 Halifax Drive to remain in its current location without change
**Two (2) palm trees can be substituted for every one (1) required shade tree within the buffer to satisfy minimum buffer planting requirements.
***A minimum six-foot (6') opaque fence or wall is to be installed on south side of the 4108 Halifax Drive property when or if the property is converted into a non-residential use that abuts a residential zoning district. General location of the fence or wall is shown on the CDP.
****Landscape buffers may be reduced to 0' along internal PCD property lines.
*****Vehicle Use Area Landscaped Islands will be permitted to be 5% of all properties

9. ARCHITECTURAL/DESIGN STANDARDS

A. All buildings and accessory structures in the PCD area shall be developed in compliance with the terms of Chapter 14 of the LDC as to architectural requirements.
B. If the structure at 4108 Halifax Drive is demolished or expanded, the architectural design of the new or expanded commercial structure must be consistent with the architectural design of the structures located on Halifax Drive, south 4108 Halifax Drive. The architectural design requirement for 4108 Halifax will defer back to Chapter 14 of the LDC upon all the properties located on Halifax Drive, between 4108 Halifax Dr. and Meeker Place being rezoned to a commercial or mixed-use zoning district.

10. PARKING AND ACCESS

Per provided Catfish Commons Shared Parking Allocation in "Exhibit D", all parking is considered common and shared throughout the entire Catfish Commons PCD, regardless of the address it is constructed on.

A. Parking spaces will be permitted to be 9' wide and 19' deep.
B. Minimum number of off-street parking will be provided as required by Exhibit D.
C. Per Case No., (11-70000002), 4085 Ridgewood Avenue provides 29 "off-site" parking spaces for 4009 Halifax Drive.
D. The minimum 10ft wide one-way driveway shown on the CDP is for circulation of traffic from 4108 Halifax Drive west to the parking lot at 4085 Ridgewood Avenue. Eastbound vehicular traffic is not

permitted onto Halifax Drive.

E. 4106 Halifax Drive residential unit parking ratio shall be 1 space for 1 unit.
F. 4085 Ridgewood Avenue and 4084 Halifax Drive Mobile Commercial parking ratio shall be 3 spaces for 1 unit.
G. 4009 Halifax Drive parking lot layout, space size and drive aisle size, dimensions and locations are considered existing non-conforming as shown on the CDP and shall be permitted to remain as is including but not limited to existing 10' one way drive aisle widths and existing 8.5" wide parking spaces.
H. Riverfront Parking spaces at 4084 and 4108 Halifax Drive east of Halifax Drive for the Marina and the Parking Spaces on the West edge of Halifax Drive on 4084 Halifax Drive are permitted to back out onto Halifax Drive provided they are angled at a minimum of 60 degrees. (Exhibit "I")
I. Parking spaces for mixed-use development at 4084 Halifax Drive are permitted to back out onto Halifax Drive provided they are angled at a minimum of 60 degrees and that the existing 4-foot wide public sidewalk is re-routed to the west side of the subject spaces as a public access 5-6 foot wide sidewalk (to be determined at site plan review). The subject space may also encroach into the portion of the Halifax Drive right-of- way, outside of the drive lanes, currently developed with a continuous concrete apron, subject to approval of a License Agreement.
J. 4085 Ridgewood Avenue new two-way drive aisle width with no parking backing into it running north/south directly on the east edge of the building structure shall be permitted to be 20' wide.
K. 4085 Ridgewood Avenue existing two-way drive aisle width with no parking backing into it on the east end of the parking lot between eastern most parking spaces and retention pond shall be permitted to be 16' wide.
L. Tandem parking spaces: The spaces shall be reserved for use by employees. Such spaces shall be identified or designated for employee parking through the use of signage or pavement markings. Dimensions for tandem parking spaces are the same as required for standard parking spaces in this MDA.

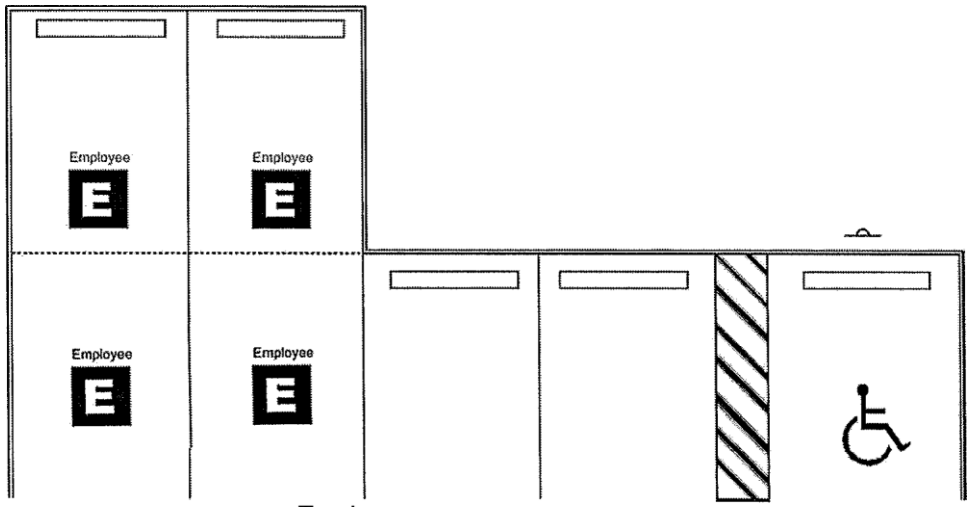

Tandem spaces

M. Landscape Curb will be permitted to angle into parking spaces that are located directly in front of the building on 4075 Ridgewood Avenue parcel only, to expand and enhance the landscape beds as shown for example in Exhibit "F". Parking spaces will have to meet ADA Code.
N. Overall Parking provided for all properties located within the Catfish Commons PCD falls under the Land Development Code Chapter 12, Section 4, item d (3) Reduction for mixed or joint use of parking spaces.
O. Any Dock within the Catfish Commons PCD area will be permitted to be a Water Taxi Docking location.

11. **DOCK / WATER ACCESS**

The properties at 4108 Halifax Drive (Parcel 6341-04-05-0050, Parcels E and G) and 4084 Halifax Drive (Parcel 6341-04-05-0010, Parcel H and I) shall be permitted to have a total of 24 boat slips for

rent to the public. The dock may be floating or stationary and constructed out of wood, composite material or cement and will be allowed to extend more than 100ft from the Halifax Drive bulkhead subject to the Volusia County Manatee Protection Plan and Florida Department of Environmental Protection permitting and as otherwise required by any other applicable local, state and federal laws. The slips may be rented to both motorized and non-motorized vessels at the owner/operator's discretion. The sale of gas and overnight live-aboard vessels shall be prohibited. The rental of motorized and non-motorized vessels to the public shall be a permitted use. Additionally, the dock may be used as an access point in and out of the water for any special event permitted on the property. Twelve (12) parking spaces shall be permitted east of Halifax Drive to support the Marinas.

12. **ROAD & ACCESS WAYS**

All roadways, drives, sidewalks, pathways, bike paths, and walkways providing access within and throughout the Property shall be private and privately maintained in accordance with declaration of covenants and restrictions recorded in the public records by the Owner & Developer.

13. PUBLIC UTILITIES AND STORMWATER MANAGEMENT

A. Public utilities shall be designed to meet the City's specifications and requirements of the LDC and City Standard Construction Details.

B. Stormwater shall be retained as generally depicted on the CDP. The Owner & Developer shall comply with the LDC, City Standard Construction Details and the rules and regulations of the St. John's River Water Management District concerning storm water drainage. The Owner & Developer shall provide all required easements to the City over the proposed retention area and related stormwater structures.

C. There are existing structures that are nonconforming structures, as defined in the LDC prior to being rezoned into the subject PCD, which encroach over existing stormwater pipes and the area where a drainage easement is to be established pursuant to the LDC. These nonconforming structures, may remain in their current location as generally shown on the CDP; however, with the application for site plan approvals, the Owner & Developer shall be required to provide a drainage easement or document similar thereto, to include language substantially similar to the following:

"Grantee agrees that in the event the nonconforming structure is destroyed, damaged or repairs exceed the limits set forth in Ch. 3, Art. II, Section 8, LDC, the nonconforming structure shall not be re-installed or re-constructed in the location of the encroachment, pursuant to Ch. 3, Art. II, Section 8, LDC."

14. SIGNAGE

The signage for the PCD properties shall be in compliance with the terms of Chapter 15 of the LDC with the following exceptions:

A. The tenant at 4009 Halifax Dr shall be permitted to have a sign panel on the monument sign at 4075 Ridgewood Avenue and 4085 Ridgewood Avenue. The multi-tenant monument signs at 4075 Ridgewood Avenue and 4085 Ridgewood Avenue may have a maximum sign area not to exceed 84 square feet.

B. A Commemorative Sign (not to exceed 64 sq ft) located on the building at 4075 Ridgewood Avenue shall be permitted separate from the allowable square footage for wall signs on that building. The commemorative signage will not count towards the maximum wall sign area allowed for the building and will be similar to the signage depicted on Exhibit "G".

C. The following signage is allowed for the property at 4108 Halifax Drive: 1 (one) "post" sign (see Exhibit "E" for example)
    i. Max Height: 6'
    ii. Max Sign Area: 24 SF

D. Externally illuminated or non-illuminated wall signage shall be permitted when or if the existing single-family residence at 4108 Halifax Dr. is converted to a commercial use. The colors and material shall compliment and coordinate with the appearance of the structure. Maximum sign height and area as allowed by Chapter 15 of the LDC for an individual commercial use.

E. Off-site signage on parcels within the PCD area is allowed for any business within the PCD. Signage shall otherwise be permitted as per the requirements in the LDC for directional signage.
F. A Mural located on the buildings at 4075 Ridgewood Avenue and 4084 Halifax Drive shall be permitted separate from the allowable square footage for wall signs on each of those buildings. The Murals will not count towards the maximum wall sign area allowed for the buildings and will be similar to the signage depicted on Exhibit "H".

15. PHASING

The PCD Property can be re-developed in multi-phases or as a single phase as shown on the CDP. The phases can be developed in any order.

- 4085 Ridgewood Avenue Mobile Commercial
- 4075 Ridgewood Avenue multi-tenant building and associated parking improvements
- 4108 Halifax Drive Single Family Dwelling conversion to commercial
- 4147 Ridgewood Avenue 3 story building and associated parking improvements
- 4108 Halifax Drive 12 slip Marina and associated parking improvements
- 4084 Halifax Drive Mixed Use Center and associated parking improvements
- 4084 Halifax Drive 12 slip Marina and associated parking improvements
- 4084 Halifax Drive Mobile Commercial
- 4084 Residential units and associated parking improvements
- 4009 Halifax Drive Long Term or Short Term Residential Units

16. ENVIRONMENTAL CONSIDERATIONS

A. Owner & Developer shall comply with all rules, statues, laws and regulations pertaining to protected wildlife species, including but not limited to the rules and permitting requirements of the Florida Fish and Wildlife Commission. Compliance with the City Environmental Preservation Code may necessitate modification of the CDP.

17. EFFECTIVE DATE AND EXPIRATION

A. This Agreement shall be effective upon recording by the City at the Owner & Developer's expense in the public records of Volusia County, Florida not later than thirty (30) days from the date the City Council approves the re-zoning. The restrictions on use and development imposed by this Agreement shall be binding upon all successors in interest in the Property, unless and until the City alters or eliminates such restrictions in the course of the City's actions as zoning authority or until this Agreement expires.
B. Development of the Catfish Commons PCD shall commence within five (5) years from the date of executions of this Agreement. The term "Development" shall be defined by the LDC.

18. AMENDMENTS

A. Amendments to this Agreement, other than minor modifications to the CDP as referred to in Section 3 of this Agreement, shall not be effective unless in writing and signed by all record title property owners of the land for which the amendment is to be applied, and the City.
B. Before amending this Agreement, the City shall conduct one or more public hearings. At the City's option, one of the public hearings may be held by the Planning Commission.
    1. Notice of intent to consider an amendment to this Agreement shall be published by the City, at the Owners cost, in a newspaper of general circulation and readership in Volusia County, Florida.
    2. If applicable, notice of intent to consider an amendment shall comply with the requirements of Section 166.041(3)(c), Florida Statutes, as amended from time to time.
    3. The day, time, and place at which the second public hearing shall take place shall be announced at the first public hearing.
    4. The notices required above shall specify the location of the PCD Property, the location of that portion of the PCD Property subject to the proposed amendment, the nature of the proposed amendment, and the following information to the extent applicable:
        i. Changes permitted, conditional, and/or prohibited uses proposed.
        ii. Changes in building intensities and/or height proposed.
    5. All notices shall specify a place where a copy of the proposed amendment can be obtained.

19. CONFORMANCE WITH LAWS

A. The Owner & Developer agrees:

1. To develop the Property according to all regulations of the City to the extent those regulations are not inconsistent with the Plan for the Property.
2. To be bound by all City codes and ordinances that are not in conflict with the provisions of this Agreement.

20. ENFORCEABILITY

If any provision of this agreement is held by a court of competent jurisdiction to be invalid or otherwise unenforceable, such holding not affect the validity or enforceability of any other provision of this Agreement unless the holding so states.

21. PRIOR AGREEMENTS

This Agreement represents the complete understanding by and between the parties with respect to the development and continued use of the subject PCD Property. This Agreement shall be an amendment to and restatement of, and shall supersede and replace the Original MDA and First Amendment. Any and all prior agreements between the parties with respect to any subject comprehended by this Agreement is hereby voided and suspended by this Agreement. Any amendment to this Agreement shall be in writing and signed by the City and the Owner(s).

22. POLICE POWER

Nothing contained in this Agreement shall be construed as a waiver of or contract with respect to the regulatory and permitting authority of the City as it now or hereafter exists under applicable laws, rules and regulations. Further, nothing contained in this Agreement shall be construed as a waiver of the attempted waiver by the City of its sovereign immunity under the constitution and laws of the State of Florida.

23. WAIVER OF FUTURE CITY FEES

Any and all city development review application submittal, site inspection, building permit, building inspection, and approval fees for future Comprehensive Plan Amendments, MDA Amendments, and all development related applications within Catfish Commons PCD excluding impact fees and stormwater special assessment fee are hereby waived for a period of 5 years from the recording date of this Second Re-stated Master Development Agreement Catfish Commons Planned Commercial Development.

[SIGNATURES ON FOLLOWING PAGES]

IN WITNESS WHEREOF, the parties have executed this Restated Catfish Commons Planned Commercial Development Master Development Agreement, by and through their duly authorized representatives, on the respective dates below.

WITNESSES:

CITY OF PORT ORANGE, FLORIDA
a Chartered Municipal Corporation

_____
Name: _____

Name: _____

Name: _____

Name: _____

By: _____
Scott Stiltner, Mayor

Date: _____

Attest: _____
Robin L. Fenwick, MMC, City Clerk

Date: _____

STATE OF FLORIDA
COUNTY OF VOLUSIA

The foregoing instrument was acknowledged before me, by means of [_] physical presence or [_] online notarization, this __ day of _____, 2025 by Scott Stiltner, as Mayor and Robin L. Fenwick, as City Clerk, both of the City of Port Orange, Florida, a chartered municipal corporation, who acknowledged that he is duly authorized to execute the foregoing agreement on behalf of the city. He is personally known to me.

Notary Public, State of Florida at Large
Printed name, commission and expiration of commission term:

WITNESSES:

BRENDAN AND SHANNON GALBREATH,
Property owners

Name: _____

Name: _____

By: _____
Brendan Galbreath, Property Owner

Date: _____

Name: _____

Name: _____

By: _____
Shannon Galbreath, Property Owner

Date: _____

STATE OF FLORIDA
COUNTY OF VOLUSIA

The foregoing instrument was acknowledged before me, by means of [_] physical presence or [_] online notarization, this __ day of _____, 2025 by Brendan and Shannon Galbreath property owners, who are [ ] personally known to me or [ ] who have produced _____ as identification and who did not take an oath.

Notary Public, State of Florida at Large
Printed name, commission and expiration of commission term:

WITNESSES:

COMMONS 4075 LLC,
Property owner
By: _____
Brendan Galbreath, Member,
Commons 4075 LLC,

_____
Name: _____

Name: _____

Date: _____

By: _____
Shannon Galbreath, Member,
Commons 4075 LLC,

_____
Name: _____

Name: _____

Date: _____

Eric Gaffka Revocable Living Trust dated
December 1, 1999
By: _____
Eric Gaffka, Trustee,
Member, Commons 4075 LLC,
Date: _____

_____
Name: _____

Name: _____

STATE OF FLORIDA
COUNTY OF VOLUSIA

The foregoing instrument was acknowledged before me, by means of [_] physical presence or [_] online notarization, this ____ day of _____, 2025 by Brendan and Shannon Galbreath, property owners, who are [ ] personally known to me or [ ] who have produced _____ as identification and who did not take an oath.

Notary Public, State of Florida at Large
Printed name, commission and expiration of commission term:

STATE OF FLORIDA
COUNTY OF VOLUSIA

The foregoing instrument was acknowledged before me, by means of [_] physical presence or [_] online notarization, this ____ day of _____, 2025 by Eric Gaffka, Trustee, who are [ ] personally known to me or [ ] who have produced _____ as identification and who did not take an oath.

Notary Public, State of Florida at Large
Printed name, commission and expiration of commission term:

WITNESSES:

HALIFAX 4084 LLC,
Property owner
By: _____
Brendan Galbreath, Member,
Halifax 4084 LLC,

_____
Name: _____

Name: _____

Date: _____

_____
Name: _____

By: _____
Shannon Galbreath, Member,
Halifax 4084 LLC,

Name: _____

Date: _____

STATE OF FLORIDA
COUNTY OF VOLUSIA

The foregoing instrument was acknowledged before me, by means of [_] physical presence or [_] online notarization, this ____ day of _____, 2025 by Brendan and Shannon Galbreath, property owners, who are [ ] personally known to me or [ ] who have produced _____ as identification and who did not take an oath.

Notary Public, State of Florida at Large
Printed name, commission and expiration of commission term:

Exhibit “A”

Legal Description

6 Parcels Combined West of Halifax Drive

ALL OF THE LAND DESCRIBED IN OFFICIAL RECORDS BOOK 6250 PAGE 4505,

ALL OF THE LAND DESCRIBED IN OFFICIAL RECORDS BOOK 8057 PAGE 4666,

ALL OF OFFICIAL RECORDS BOOK 6928 PAGE 1511, LYING WESTERLY OF THE WEST RIGHT OF WAY LINE OF HALIFAX DRIVE,

ALL OF THE LAND DESCRIBED IN OFFICIAL RECORDS BOOK 6598 PAGE 1462,

ALL OF OFFICIAL RECORDS BOOK 6598 PAGE 1462,

AND ALL OF OFFICIAL RECORDS BOOK 7781, PAGE 4878, BEING DESCRIBED AS FOLLOWS:

BEGIN AT THE NORTHEAST CORNER OF SAID OFFICIAL RECORDS BOOK 6250 PAGE 4505, THENCE, THE FOLLOWING:

THENCE S 26°05’26” E A DISTANCE OF 142.22 FEET;

THENCE S 76°48’21” W A DISTANCE OF 181.53 FEET;

THENCE S 24°27’17” E A DISTANCE OF 137.06 FEET;

THENCE N 65°14’09” E A DISTANCE OF 180.91 FEET;

THENCE S 26°20’47” E A DISTANCE OF 154.91 FEET;

THENCE S 65°18’12” W A DISTANCE OF 152.63 FEET;

THENCE S 25°41’50” E A DISTANCE OF 70.23 FEET;

THENCE S 65°14’55” W A DISTANCE OF 96.58 FEET;

THENCE S 26°19’51” E A DISTANCE OF 39.95 FEET;

THENCE S 65°25’49” W A DISTANCE OF 191.93 FEET;

THENCE ALONG A NON-TANGENT CURVE CONCAVE SOUTHEAST, HAVING AN ARC LENGTH OF 44.55 FEET, A RADIUS OF 11509.20 FEET, A DELTA ANGLE OF 00°13’18”, AND A CHORD BEARING OF N 26° 30’15” W, CHORD LENGTH OF 44.55 FEET,

THENCE N 26°36’54” W A DISTANCE OF 254.92 FEET;

THENCE N 21°45’31” W A DISTANCE OF 38.26 FEET;

THENCE ALONG A NON-TANGENT CURVE CONCAVE SOUTHEAST, HAVING AN ARC LENGTH OF 178.87 FEET, A RADIUS OF 134.30 FEET, A DELTA ANGLE OF 76°18’37”, AND A CHORD BEARING OF N 16°26’05” E, CHORD LENGTH OF 165.94 FEET,

THENCE N 57°26’23” E A DISTANCE OF 124.09 FEET;

THENCE N 57°29’48” E A DISTANCE OF 206.21 FEET TO THE POINT OF BEGINNING.

HAVING AN AREA OF 166,137 SQUARE FEET, 3.81 ACRES

4084 and 4108 Halifax Drive Upland Parcels East of Halifax Drive

All OF THAT PARCEL OF LAND DESCRIBED IN OFFICIAL RECORD BOOK 6928, PAGE 1511, AND OFFICIAL BOOK 8335, PAGE 4257, PUBLIC RECORDS OF VOLUSIA COUNTY, FLORIDA, LYING EASTERLY OF HALIFAX DRIVE, A 40 FOOT WIDE ROAD PER DEEDS, BEING DESCRIBED AS FOLLOWS:

BEGIN AT THE INTERSECTION OF THE NORTH LINE OF SAID OFFICIAL RECORD BOOK 6928, PAGE 1511, AND THE EASTERLY LINE OF SAID HALIFAX DRIVE;

THENCE N 26’20’47” W ALONG SAID EASTERLY RIGHT OF WAY LINE, A DISTANCE OF 79.93 FEET;

THENCE ALONG NORTH LINE OF SAID OFFICIAL RECORD BOOK 8335, PAGE 4257, N 65’14’09” E, A DISTANCE OF 21.52 FEET TO AN INTERSECTION WITH THE EAST FACE OF AN EXISTING CONCRETE SEAWALL;

THENCE THE NEXT THREE COURSES ALONG SAID EAST FACE OF CONCRETE SEAWALL:
1) THENCE S 23’45’20” E A DISTANCE OF 79.92 FEET;
2) THENCE S 65’15’37” W A DISTANCE OF 4.93 FEET
3) THENCE S 25’24’07” E A DISTANCE OF 75.01 FEET TO AN INTERSECTION WITH THE SOUTH LINE OF SAID OFFICIAL RECORDS BOOK 6928, PAGE 1511

THENCE S 65’18’12” W ALONG SAID SOUTH LINE OF OFFICIAL RECORDS BOOK 6928, PAGE 1511, A DISTANCE OF 11.74 FEET TO AN INTERSECTION WITH SAID EAST LINE OF HALIFAX DRIVE ;

THENCE N 26’20’47” W ALONG SAID EAST LINE OF HALIFAX DRIVE, A DISTANCE OF 75.03 FEET TO THE POINT OF BEGINNING.

HAVING AN AREA OF 2,505 SQUARE FEET, 0.06 ACRES

4009 Halifax Drive Upland Parcel East of Halifax Drive

A PORTION OF SECTION 3, TOWNSHIP 16 SOUTH, RANGE 33 EAST, VOLUSIA COUNTY, FLORIDA, DESCRIBED AS FOLLOWS:
FOR A POINT OF BEGINNING COMMENCE AT THE INTERSECTION OF THE EASTERLY RIGHT-OF-WAY LINE OF HALIFAX DRIVE, A 40 FOOT RIGHT-A-WAY, WITH THE SOUTHERLY RIGHT-OF-WAY LINE OF DUNLAWTON AVENUE (S-421) RUN N57’37’14”E ALONG THE SOUTHERLY RIGHT-OF-WAY LINE OF SAID DUNLAWTON AVENUE, A DISTANCE OF 29.11 FEET, THENCE S24’38’37”E CONTINUING ALONG SAID RIGHT-OF-WAY LINE, A DISTANCE OF 59.61 FEET; THENCE N62’03’04”E CONTINUING ALONG SAID RIGHT-OF-WAY LINE, A DISTANCE OF 32.74 FEET; THENCE DEPARTING SAID RIGHT-OF-WAY LINE RUN S55’45’42”E, A DISTANCE OF 0.38 FEETTO AN INTERSECTION WITH THE SAFE UPLAND LINE (ELEVATION 1.50 FEET) ; THENCE ALONG SAID SAFE UPLAND LINE THE FOLLOWING COURSES AND DISTANCES; S28’52’21”W, A DISTANCE OF 16.40 FEET; THENCE S24’32’32”W, A DISTANCE OF 7.63 FEET; THENCE S27’35’16”W, A DISTANCE OF 13.28 FEET; THENCE S22’13’35”3E, A DISTANCE OF 79.19 FEET TO A POINT OF THE FACE OF A CONCRETE SEAWALL; THENCE S23’38’31”E ALONG SAID SEAWALL, A DISTANCE OF 25.45 FEET TO THE AFOREMENTIONED EASTERLY RIGHT-OF-WAY LINE OF HALIFAX DRIVE; THENCE N26’04’47”W ALONG SAID RIGHT-OF-WAY LINE, A DISTANCE OF 155.65 FEET TO THE POINT OF BEGINNING.

HAVING AND AREA OF 4839.18 SQUARE FEET, .11 ACRES

CATFISH COMMONS PCD CONCEPTUAL DEVELOPMENT PLAN

"EXHIBIT B"

LAND USE CALCULATION:

SITE AREA = 6 COMBINED PARCELS = 3.81 AC
SITE AREA PARCEL A = 0.11 AC
SITE AREA PARCEL G & I = 0.06 AC

TOTAL SITE AREA PARCELS A–I = 3.98 AC

PARCEL A & C #630311010030, #630311010022 = 27,179 SF (0.62 AC)
EXISTING PAVEMENT = 20,575 SF (0.47 AC)
EXISTING BUILDING = 4,792 SF (0.11 AC)
TOTAL IMPERVIOUS AREA = 25,367 SF (0.58 AC) = 93.33%
TOTAL OPEN SPACE AREA = 1,812 SF (0.04 AC) = 6.67%

PARCEL B #630311010012 = 47,693 SF (1.09 AC)
PROPOSED PAVEMENT = 25,229 SF (0.58 AC)
PROPOSED PAVERS = 613 SF (0.01 AC)
PROPOSED CONCRETE = 476 SF (0.01 AC)
PROPOSED BUILDING = 6,513 SF (0.15 AC)
TOTAL IMPERVIOUS AREA = 32,831 SF (0.75 AC) = 68.84%
TOTAL OPEN SPACE AREA = 14,863 SF (0.34 AC) = 31.16%
TOTAL BUILDING COVERAGE = 6,513 SF/47,693 SF = 13.66%

PARCEL D #634104050020 = 55,236 SF (1.27 AC)
EXISTING PAVEMENT = 27,324 SF (0.63 AC)
EXISTING CONCRETE = 2,452 SF (0.06 AC)
EXISTING BUILDING = 7,090 SF (0.16 AC)
PROPOSED PAVEMENT = 550 SF (0.01 AC)
PROPOSED CONCRETE = 155 SF (0.003 AC)
TOTAL IMPERVIOUS AREA = 37,571 SF (0.86 AC) = 68.02%
TOTAL OPEN SPACE AREA = 17,665 SF (0.41 AC) = 31.98%
TOTAL BUILDING COVERAGE = 7,090 SF/55,236 SF = 12.84%

PARCEL E & G #634104050050 = 10,810 SF (0.25 AC)
EXISTING CONCRETE = 2,740 SF (0.06 AC)
EXISTING BUILDINGS = 2,124 SF (0.05 AC)
PROPOSED CONCRETE = 910 SF (0.02 AC)
TOTAL IMPERVIOUS AREA = 5,774 SF (0.13 AC) = 53.41%
TOTAL OPEN SPACE AREA = 5,036 SF (0.12 AC) = 46.59%
TOTAL BUILDING COVERAGE = 2,124 SF/10,810 SF = 19.65%

PARCEL F #634104030010 = 7,606 SF (0.17 AC)
PROPOSED PAVEMENT = 2,148 SF (0.05 AC)
PROPOSED CONCRETE = 249 SF (0.006 AC)
PROPOSED BUILDING = 1,610 SF (0.04 AC)
TOTAL IMPERVIOUS AREA = 4,007 SF (0.09 AC) = 52.68%
TOTAL OPEN SPACE AREA = 3,599 SF (0.08 AC) = 47.32%
TOTAL BUILDING COVERAGE = 1,610 SF/7,606 SF = 21.17%

PARCEL H & I #634104050010 = 25,225 SF (0.58 AC)
EXISTING CONCRETE & PAVEMENT = 9,130 SF (0.21 AC)
EXISTING BUILDINGS = 5,346 SF (0.12 AC)
PROPOSED PAVEMENT = 4,747 SF (0.11 AC)
TOTAL IMPERVIOUS AREA = 19,223 SF (0.44 AC) = 76.21%
TOTAL OPEN SPACE AREA = 6,002 SF (0.14 AC) = 23.79%
TOTAL BUILDING COVERAGE = 5,346 SF/25,225 SF = 21.19%

LAND USE SUMMARY:

TOTAL COMBINED SITE AREA = 173,749 SF (3.98 AC)
TOTAL IMPERVIOUS AREA = 124,773 SF (2.86 AC) = 71.81%
TOTAL OPEN SPACE AREA = 48,976 SF (1.12 AC) = 28.19%
TOTAL BUILDING COVERAGE = 27,475 SF/173,749 SF = 15.81%

NOTES:

1. COMPLIANCE WITH THE LAND DEVELOPMENT CODE MAY NECESSITATE MODIFICATION OF THE CONCEPTUAL PLAN PER LDC CHAPTER 17, SECTION 18(G)(2)(K).

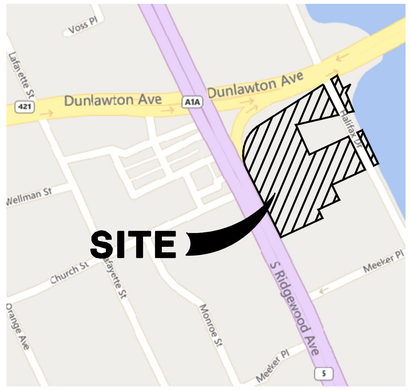

VICINITY MAP
SCALE 1" = 300'

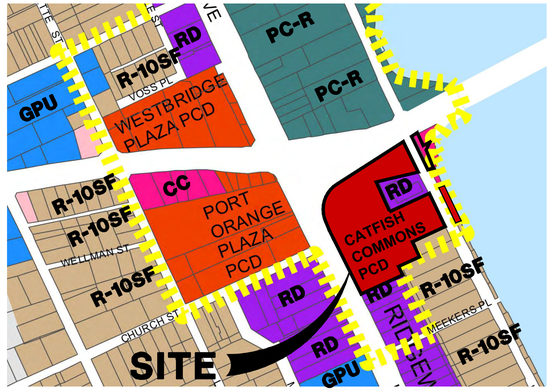

ZONING MAP
SCALE 1" = 300'

GPU Government/Public Use
PC-R Planned Community-PO Riverwalk
CC Community Commercial
RD Ridgewood Development
R-10SF Single Family Residential
Riverwalk Overlay District

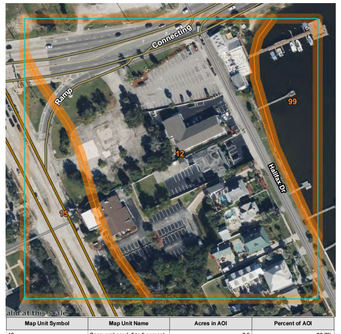

Map Unit Symbol	Map Unit Name	Acres in AOI	Percent of AOI
12	Canaveral sand, 0 to 5 percent slopes	7.9	70.7%
15	Cocoa sand, 0 to 5 percent slopes	2.0	18.2%
99	Water	1.2	11.1%
Totals for Area of Interest		11.1	100.0%

SOIL MAP

FEMA FLOOD MAP
ZONES = X AND AE
MAP EFFECTIVE DATE 09/29/17

ENGINEER/LANDSCAPE ARCHITECT:

PARKER MYNCHENBERG & ASSOCIATES, INC.
PARKER MYNCHENBERG P.E. #32645
PARKER MYNCHENBERG L.A. #1553
CERTIFICATE OF AUTHORIZATION NUMBER: 00003910
1729 RIDGEWOOD AVENUE
HOLLY HILL, FLORIDA 32117
(386) 677–6891 FAX (386) 677–2114
EMAILS: info@parkermynchenberg.com
sbuswell@parkermynchenberg.com

ARCHITECT:

BPF DESIGN
BRIAN FREDLEY
207 FAIRVIEW AVENUE
DAYTONA BEACH, FLORIDA 32114 PHONE:
(386) 257–0502
FAX: (386) 257–1050
E–MAIL: BPFDESIGN@CFL.RR.COM

SURVEYOR:

CULLUM LAND SURVEYING, INC.
5889 S. WILLIAMSON BLVD. #205
PORT ORANGE, FL 32128
ph: 386–761–7666
fax: 386–761–7909
GREGGC@CULLUMLANDSURVEYING.COM

PROPERTY OWNERS:

PARCEL B #630611010012
OWNER: COMMONS 4075 LLC
ADDRESS: 4075 RIDGEWOOD AVE,
PORT ORANGE, FLORIDA 32127

PARCEL A & C #630311010030, #630311010022
OWNER: GALBREATH BRENDAN R & SHANNON
ADDRESS: DUNLAWTON AVE,
PORT ORANGE, FLORIDA 32127

PARCEL F #634104030010
OWNER: GALBREATH BRENDAN – TE– TENANCY IN THE ENTIRETY – 100
GALBREATH SHANNON – TE – TENANCY IN THE ENTIRETY – 100
ADDRESS: 4147 RIDGEWOOD AVE,
PORT ORANGE, FLORIDA 32127

PARCEL D #634104050020
OWNER: GALBREATH BRENDAN & SHANNON – 100
ADDRESS: 4085 RIDGEWOOD AVE,
PORT ORANGE, FLORIDA 32127

PARCEL E & G #634104050050
OWNER: GALBREATH BRENDAN R – TE– TENANCY IN THE ENTIRETY – 100
GALBREATH SHANNON M – TE – TENANCY IN THE ENTIRETY – 100
ADDRESS: 4108 HALIFAX DR,
PORT ORANGE, FLORIDA 32127

PARCEL H & I #634104050010
OWNER: HALIFAX 4084 LLC – FS – FEE SIMPLE
ADDRESS: 4084 HALIFAX DR,
PORT ORANGE, FLORIDA 32127

6 PARCELS (PARCELS B, C, D, E, F, & H) COMBINE WEST OF HALIFAX DRIVE LEGAL DESCRIPTION

A COMPOSITE LEGAL DESCRIPTION OF THE FOLLOWING, FOR INFORMATIONAL PURPOSES ONLY, BASED ON A FIELD SURVEY OF THE FOLLOWING OFFICIAL RECORDS BOOK AND PAGES,
ALL OF OFFICIAL RECORDS BOOK 6250 PAGE 4505,
ALL OF OFFICIAL RECORDS BOOK 8057 PAGE 4666,
ALL OF OFFICIAL RECORDS BOOK 6928 PAGE 1511, LYING WESTERLY OF THE WEST RIGHT OF WAY LINE OF HALIFAX DRIVE,
ALL OF OFFICIAL RECORDS BOOK 6598 PAGE 1462,
AND ALL OF OFFICIAL RECORDS BOOK 7781, PAGE 4878, BEING DESCRIBED AS FOLLOWS: BEGIN AT THE NORTHEAST CORNER OF SAID OFFICIAL RECORDS BOOK 6250 PAGE 4505, THENCE, THE FOLLOWING;
THENCE S 26°05'26" E A DISTANCE OF 142.22 FEET;
THENCE S 76°48'21" W A DISTANCE OF 181.53 FEET;
THENCE S 24°27'17" E A DISTANCE OF 137.06 FEET;
THENCE N 65°14'09" E A DISTANCE OF 180.91 FEET;
THENCE S 26°20'47" E A DISTANCE OF 154.91 FEET;
THENCE S 65°18'12" W A DISTANCE OF 152.63 FEET;
THENCE S 25°41'50" E A DISTANCE OF 70.23 FEET;
THENCE S 65°14'55" W A DISTANCE OF 96.58 FEET;
THENCE S 26°19'51" E A DISTANCE OF 39.95 FEET;
THENCE S 65°25'49" W A DISTANCE OF 191.93 FEET;
THENCE ALONG A NON–TANGENT CURVE CONCAVE SOUTHWEST, HAVING AN ARC LENGTH OF 44.55 FEET, A RADIUS OF 11509.20 FEET, A DELTA ANGLE OF 00°13'18", AND A CHORD BEARING OF N 26°30'15" W, CHORD LENGTH OF 44.55 FEET; THENCE N 26°36'54" W A DISTANCE OF 254.92 FEET; THENCE N 21°45'31" W A DISTANCE OF 38.26 FEET; THENCE ALONG A NON–TANGENT CURVE CONCAVE SOUTHEAST, HAVING AN ARC LENGTH OF 178.87 FEET, A RADIUS OF 134.30 FEET, A DELTA ANGLE OF 76°18'37", AND A CHORD BEARING OF N 16°26'05" E, CHORD LENGTH OF 165.94 FEET; THENCE N 57°26'23" E A DISTANCE OF 124.09 FEET; THENCE N 57°29'48" E A DISTANCE OF 206.21 FEET TO THE POINT OF BEGINNING.
HAVING AN AREA OF 166137 SQUARE FEET, 3.81 ACRES

4084 & 4108 (PARCEL G & I) HALIFAX DRIVE UPLAND PARCEL EAST OF HALIFAX DRIVE LEGAL DESCRIPTION

ALL OF THAT PARCEL OF LAND DESCRIBED IN OFFICIAL RECORDS BOOK 6928, PAGE 1511, AND OFFICIAL RECORDS BOOK 8335, PAGE 4257, PUBLIC RECORDS OF VOLUSIA COUNTY, FLORIDA, LYING EASTERLY OF HALIFAX DRIVE, A 40 FOOT WIDE ROAD PER DEEDS, BEING DESCRIBED AS FOLLOWS: BEGIN AT THE THE INTERSECTION OF THE NORTH LINE OF SAID OFFICIAL RECORDS BOOK 6928, PAGE 1511, AND THE EASTERLY LINE OF SAID HALIFAX DRIVE;
THENCE N 26°20'47" W ALONG SAID EASTERLY RIGHT OF WAY LINE, A DISTANCE OF 79.93 FEET; THENCE ALONG NORTH LINE OF SAID OFFICIAL RECORDS BOOK 8335, PAGE 4257, N 65°14'09" E, A DISTANCE OF 21.52 FEET TO AN INTERSECTION WITH THE EAST FACE OF AN EXISTING CONCRETE SEAWALL; THENCE THE NEXT THREE COURSES ALONG SAID EAST FACE OF CONCRETE SEAWALKLL: THENCE S 23°45'20" E A DISTANCE OF 79.92 FEET; THENCE S 65°15'37" W A DISTANCE OF 4.93 FEET; THENCE S 25°24'07" E A DISTANCE OF 75.01 FEET TO AN INTERSECTION WITH THE SOUTH LINE OF SAID OFFICIAL RECORDS BOOK 6928, PAGE 1511; THENCE S 65°18'12" W ALONG SAID SOUTH LINE OF OFFICIAL RECORDS BOOK 6928, PAGE 1511, A DISTANCE OF 11.74 FEET TO AND INTERSECTION WITH SAID EAST LINE OF HALIFAX DRIVE; THENCE N 26°20'47" W ALONG SAID EAST LINE OF HALIFAX DRIVE, A DISTANCE OF 75.03 FEET TO THE POINT OF BEGINNING. HAVING AN AREA OF 2502 SQUARE FEET, 0.06 ACRES

4009 (PARCEL A) HALIFAX DRIVE UPLAND PARCEL EAST OF HALIFAX DRIVE LEGAL DESCRIPTION

(AS SUPPLIED BY CLIENT)
A PORTION OF SECTION 3, TOWNSHIP 16 SOUTH, RANGE 33 EAST, VOLUSIA COUNTY, FLORIDA, DESCRIBED AS FOLLOWS:
FOR A POINT OF BEGINNING COMMENCE AT THE INTERSECTION OF THE EASTERLY RIGHT–OF–WAY LINE OF HALIFAX DRIVE, A 40 FOOT RIGHT–OF–WAY, WITH THE SOUTHERLY RIGHT–OF–WAY LINE OF DUNLAWTON AVENUE (S–421) RUN N57°37'14"E ALONG THE SOUTHERLY RIGHT–OF–WAY LINE OF SAID DUNLAWTON AVENUE, A DISTANCE OF 29.11 FEET, THENCE S24°38'37'E CONTINUING ALONG SAID RIGHT–OF–WAY LINE, A DISTANCE OF 59.61 FEET; THENCE N62°03'04"E CONTINUING ALONG SAID RIGHT–OF–WAY LINE, A DISTANCE OF 32.74 FEET; THENCE DEPARTING SAID RIGHT–OF–WAY LINE RUN S55°45'42"E, A DISTANCE OF 0.38 FEET TO AN INTERSECTION WITH THE SAFE UPLAND LINE (ELEVATION 1.50 FEET) ; THENCE ALONG SAID SAFE UPLAND LINE THE FOLLOWING COURSES AND DISTANCES; S28°52'21"W, A DISTANCE OF 16.40 FEET; THENCE S24°32'32"W, A DISTANCE OF 7.63 FEET; THENCE S27°35'16"W, A DISTANCE OF 13.28 FEET; THENCE S22°13'35"E, A DISTANCE OF 79.19 FEET TO A POINT TO THE FACE OF A CONCRETE SEAWALL; THENCE S23°38'31"E ALONG SAID SEAWALL, 4.74 FEET; THENCE S76°49'56"W DEPARTING SAID SEAWALL, A DISTANCE OF 25.45 FEET TO THE AFOREMENTIONED EASTERLY RIGHT–OF–WAY LINE OF HALIFAX DRIVE; THENCE N26°04'47"W ALONG SAID RIGHT–OF–WAY LINE, A DISTANCE OF 155.65 FEET TO THE POINT OF BEGINNING. CONTAINING 4839.18 SQUARE FEET 0.11 ACRES

NO.	DATE	DESCRIPTION	BY
		REVISIONS	
5.	12.18.2024	REVISED	ADK
4	12.17.2024	REVISED	ADK
3	12.16.2024	REVISED	ADK
2	11.20.2024	REVISED PER SDRC COMMENTS	ADK
1	09/09/2024	REVISED	MAG

PARKER MYNCHENBERG & ASSOCIATES, INC.
PROFESSIONAL ENGINEERS * LANDSCAPE ARCHITECTS
1729 RIDGEWOOD AVENUE HOLLY HILL, FLORIDA 32117
(386) 677–6891 FAX (386) 677–2114 E–MAIL: info@parkermynchenberg.com
PARKER MYNCHENBERG P.E. #32645 P.L.A. #001553, STEVE BUSWELL P.E. #53985 P.L.A. #6667011
CERTIFICATE OF AUTHORIZATION NUMBER 00003910

CATFISH COMMONS
PORT ORANGE * FLORIDA
PCD CONCEPTUAL DEVELOPMENT PLAN
"EXHIBIT B"

1 OF 2
SHEET NO.

DRAWN BY: ADK
DATE: 11/20/2024
JOB NO. 24–02
SCALE: NONE

SEAL

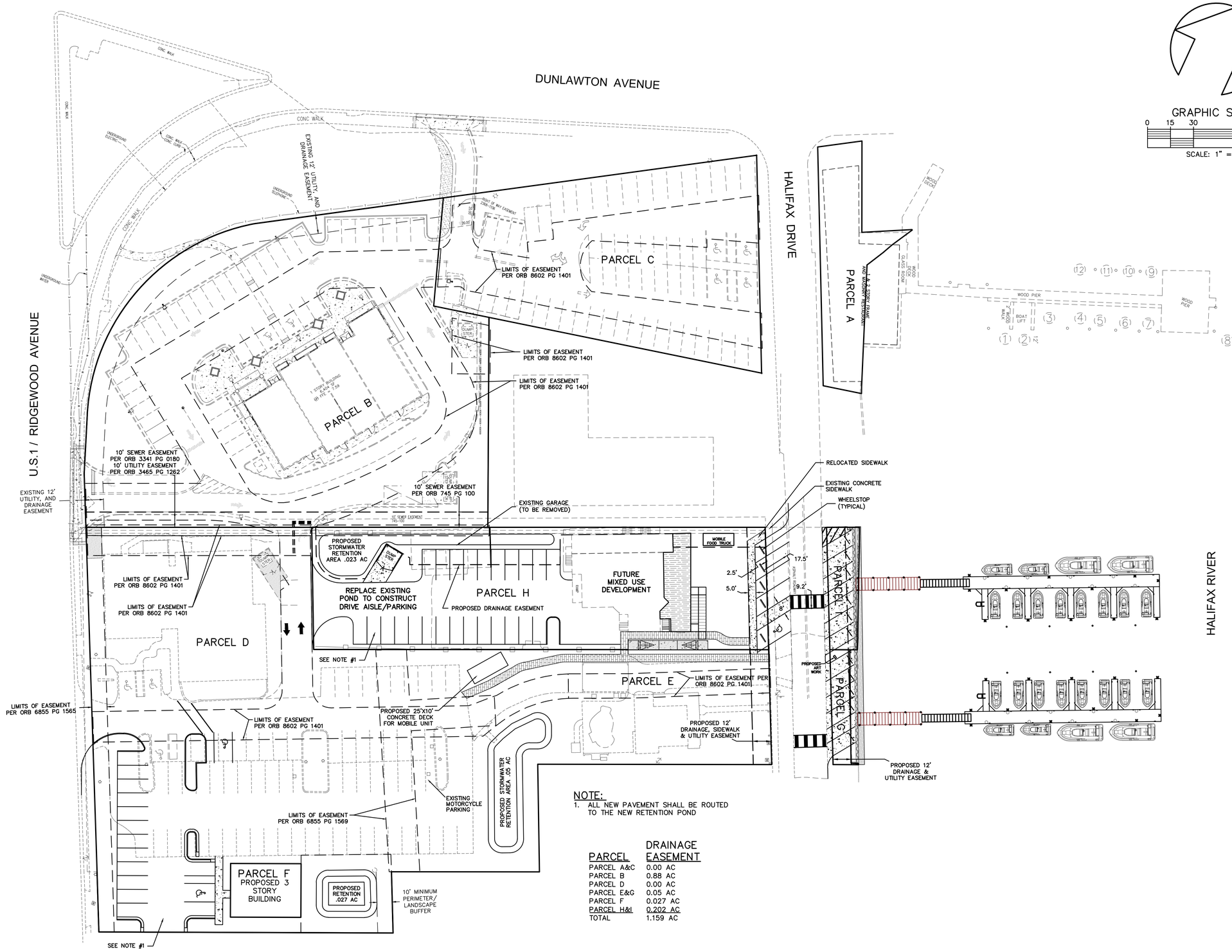

NOTE:
1. ALL NEW PAVEMENT SHALL BE ROUTED TO THE NEW RETENTION POND

PARCEL	DRAINAGE EASEMENT
PARCEL A&C	0.00 AC
PARCEL B	0.88 AC
PARCEL D	0.00 AC
PARCEL E&G	0.05 AC
PARCEL F	0.027 AC
PARCEL H&I	0.202 AC
TOTAL	1.159 AC

NO.	DATE	DESCRIPTION	BY
		REVISIONS	
5	12.18.2024	REVISED	ADK
4	12.17.2024	REVISED	ADK
3	12.16.2024	REVISED	ADK
2	11.20.2024	REVISED PER SDRC COMMENTS	ADK
1	09/09/2024	REVISED	MAG

PARKER MYNCHENBERG & ASSOCIATES, INC.
PROFESSIONAL ENGINEERS * LANDSCAPE ARCHITECTS
1729 RIDGEWOOD AVENUE HOLLY HILL, FLORIDA 32117
(386) 677-6891 FAX (386) 677-2114 E-MAIL: info@parkermynchenberg.com
PARKER MYNCHENBERG P.E. #32645 R.L.A. #0001553, STEVE BUSHELL P.E. #53985 R.L.A. #6667011
CERTIFICATE OF AUTHORIZATION NUMBER 00003910

CATFISH COMMONS
PORT ORANGE * FLORIDA

PCD CONCEPTUAL DEVELOPMENT PLAN
"EXHIBIT B"

2 OF 2
SHEET NO.

DRAWN BY: ADK
DATE: 11/20/2024
JOB NO. 24-02
SCALE: NONE

SEAL

Map Unit Symbol	Map Unit Name	Acres in AOI	Percent of AOI
12	Canaveral sand, 0 to 5 percent slopes	7.9	70.7%
15	Cocoa sand, 0 to 5 percent slopes	2.0	18.2%
99	Water	1.2	11.1%
Totals for Area of Interest		**11.1**	**100.0%**

SOILS MAP

PARKER MYNCHENBERG
& ASSOCIATES, INC.
PROFESSIONAL ENGINEERS * LANDSCAPE ARCHITECTS
1729 RIDGEWOOD AVENUE HOLLY HILL, FLORIDA 32117
(386) 677-6891 FAX (386) 677-2114 E-MAIL: info@parkermynchenberg.com
PARKER MYNCHENBERG P.E. #32645 R.L.A. #0001553, STEVE BUSWELL P.E. #53985 R.L.A. #LA6667011
CERTIFICATE OF AUTHORIZATON NUMBER 00003910

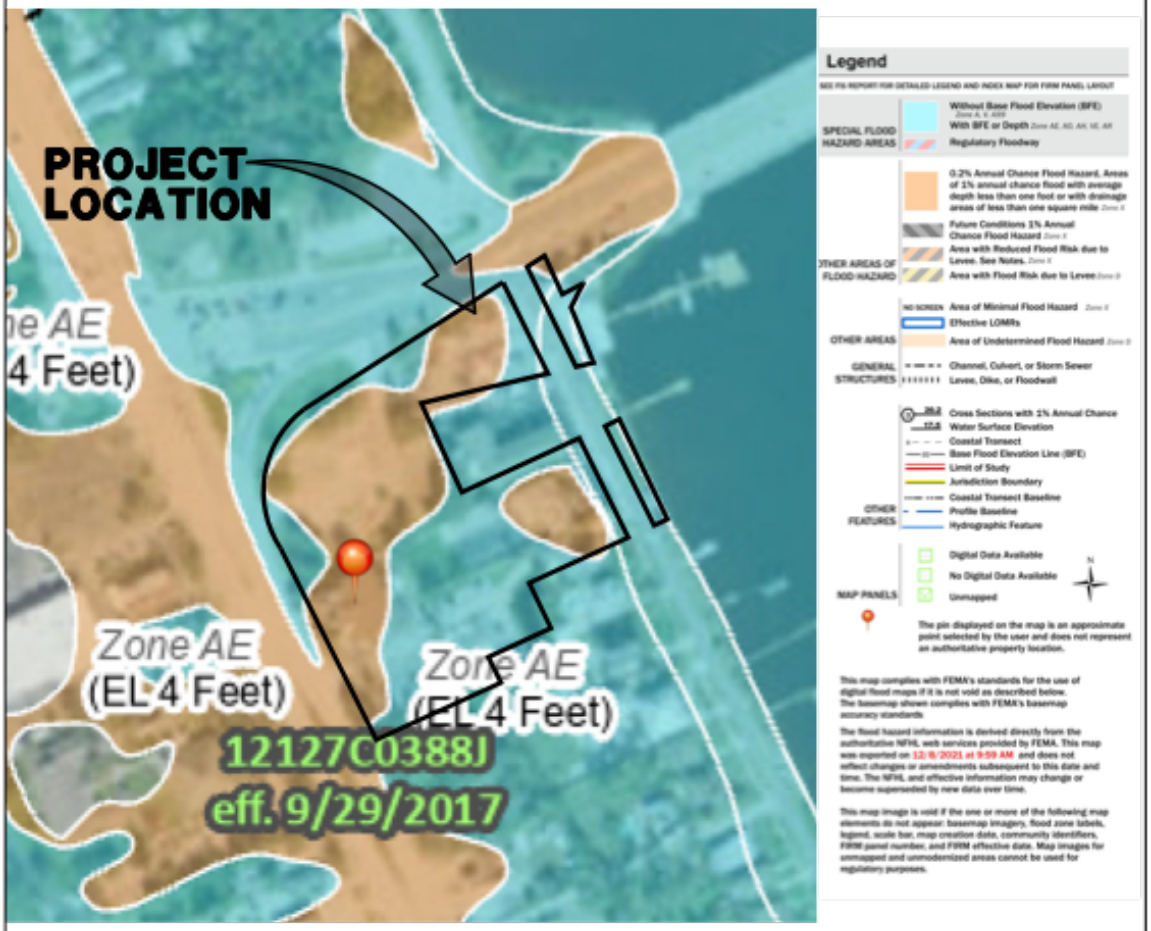

FEMA FLOOD MAP

ZONES = X AND AE

MAP EFFECTIVE DATE 09/29/17

SCALE: 1" = 200'

PARKER MYNCHENBERG
& ASSOCIATES, INC.
PROFESSIONAL ENGINEERS * LANDSCAPE ARCHITECTS
1729 RIDGEWOOD AVENUE HOLLY HILL, FLORIDA 32117
(386) 677-6891 FAX (386) 677-2114 E-MAIL: info@parkermynchenberg.com
PARKER MYNCHENBERG P.E. #32645 R.L.A. #0001553, STEVE BUSWELL P.E. #53985 R.L.A. #LA6667011
CERTIFICATE OF AUTHORIZATON NUMBER 00003910

Exhibit “C”

General Appearance of Mobile Commercial Unit

Exhibit "D"
Catfish Commons Parking Allocation

Total Proposed Parking Provided per CDP

4009 Halifax Drive…63
4085 Ridgewood Avenue…77 (including new 3 story office/residential building site at 4147 Ridgewood Avenue)
4108 Halifax Drive…5
4075 Ridgewood Avenue…40
4084 Halifax Drive…35

Total Spaces Provided…220

Parking Required by Code per proposed use

Aunt Catfish's (4009 Halifax Drive)…88 (228 seats + 24employees)

La Cantina…38 (4085 Ridgewood Avenue) (100 seats + 10 employees)

Loft Apartment…1 (4106 Halifax Dr)

Mobile Commercial…3 (4085 Ridgewood Avenue and 4084 Halifax Drive)

Office w/ 4 residential units above…8 (4147 Ridgewood Avenue) (1.5 per 805 square feet and 1 per residential unit)

Marina…8 (4084 and 4108 Halifax Drive) (1 parking space per 3 boat slips)

4075 Ridgewood multi-tenant commercial building (1 per 250 square feet)…35

Residential…8 (4084 Halifax Drive) 1 per unit

Commercial…6 (4084 Halifax Drive) 3 per unit

Restaurant…28 (4084 Halifax Drive) 1 per 3 seats and 1 per 2 employees (72 seats + 8 employees)

Total Spaces Required by Code…223

Overall Parking provided for all properties located within the Catfish Commons PCD falls under the Land Development Code Chapter 12, Section 4, item 3 (d) Reduction for mixed or joint use of parking spaces.

Exhibit "E"

Sign Design Options

Note: The Sign Design Options included are conceptual only and are intended to provide general examples of commercial signage that compliments and coordinates with the residential appearance of Halifax Drive. Final design drawings will be submitted for permitting at a later date.

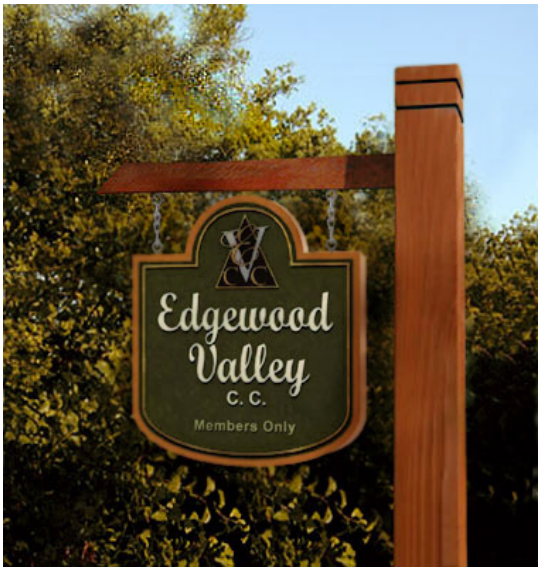

Exhibit “F”
Landscape Curb into Parking Space

GRAPHIC SCALE

0 10 20 40 60

SCALE: 1" = 20'

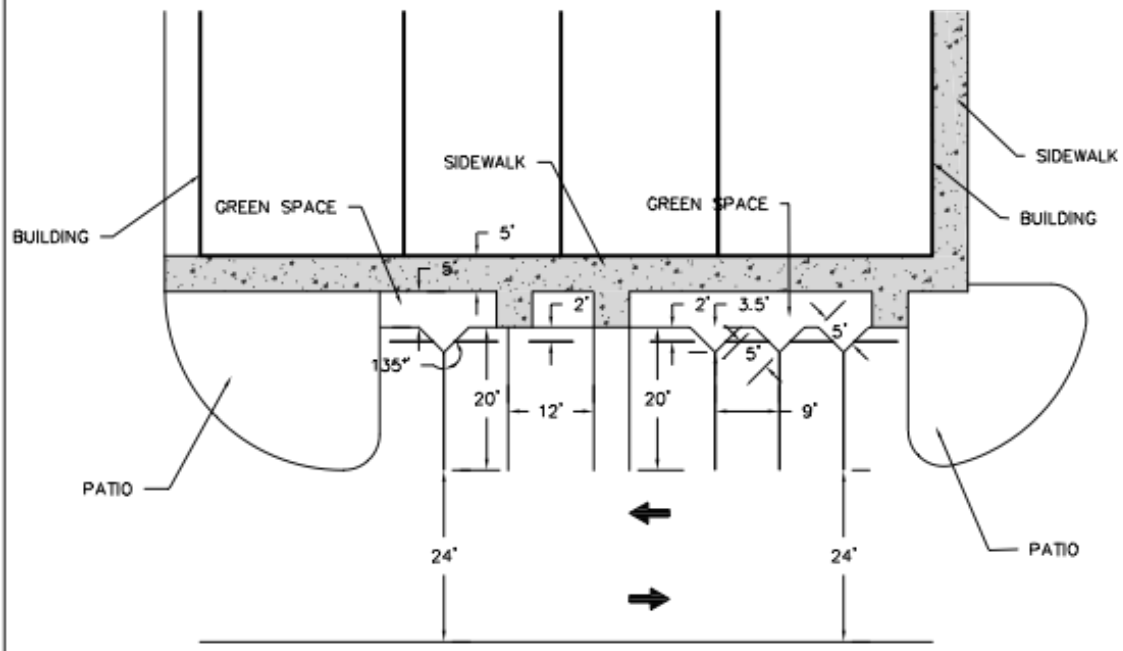

PARKER MYNCHENBERG
& ASSOCIATES, INC.
PROFESSIONAL ENGINEERS * LANDSCAPE ARCHITECTS
1729 RIDGEWOOD AVENUE HOLLY HILL, FLORIDA 32117
(386) 677-6891 FAX (386) 677-2114 E-MAIL: info@parkermynchenberg.com
PARKER MYNCHENBERG P.E. #32645 R.L.A. #0001553, STEVE BUSWELL P.E. #53985 R.L.A. #LA6667011
CERTIFICATE OF AUTHORIZATON NUMBER 00003910

Exhibit “G”

[redacted]

[redacted]

DAYTONA
SALT AIR AND SAND
SINCE 1960
BEACH SHORES

[redacted]

[redacted]

Exhibit “H”

Exhibit "I

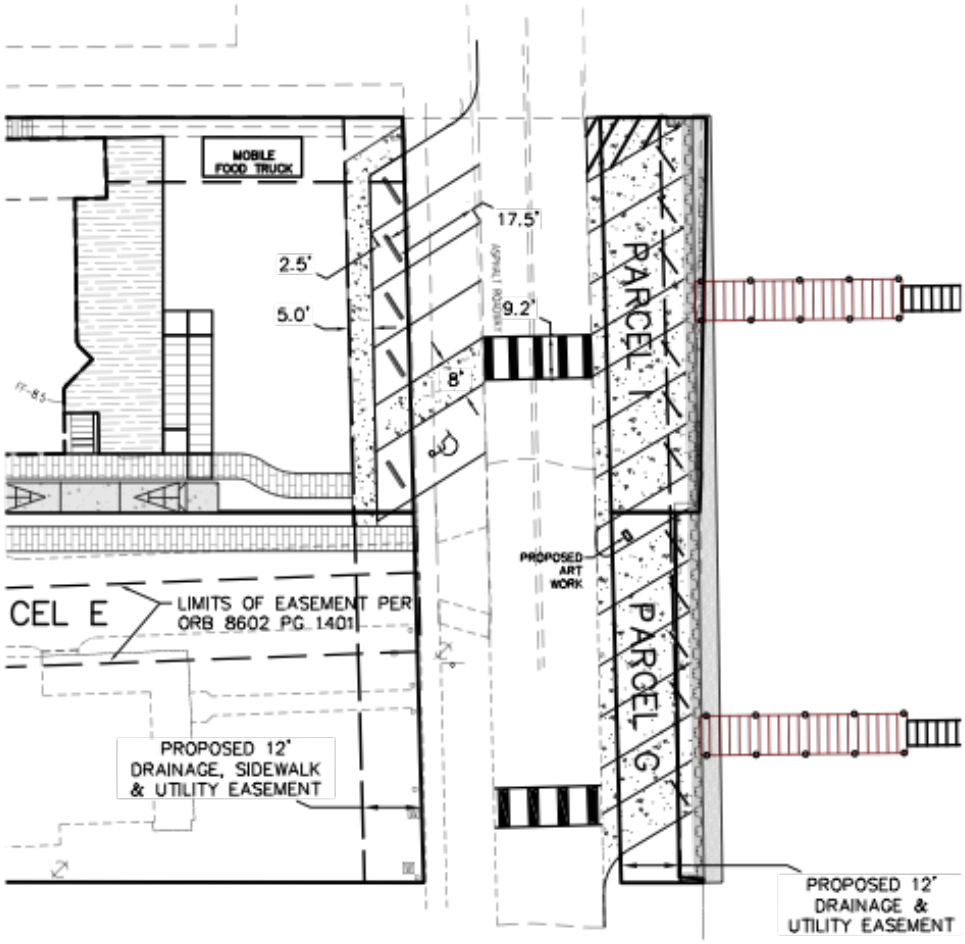

GRAPHIC SCALE

0 15 30 60 90

SCALE: 1" = 30'

CATFISH COMMONS
MASTER DEVELOPMENT AGREEMENT

PARKER MYNCHENBERG & ASSOCIATES, INC.
PROFESSIONAL ENGINEERS * LANDSCAPE ARCHITECTS
1729 RIDGEWOOD AVENUE HOLLY HILL, FLORIDA 32117
(386) 677-6891 FAX (386) 677-2114 E-MAIL: info@parkermynchenberg.com
CERTIFICATE OF AUTHORIZATION NUMBER 00003910

EXHIBIT I
01.10.2025

Section 32: Mixed Use Center (MXC) district.

(a) *Purpose and intent*. The Mixed Use Center (MXC) district is intended to serve as an alternative to the single-use, community-level commercial node in certain settings. A mixed-use center contains a variety of land uses, which may include commercial, office, service, residential, and institutional development, and is focused around a point of high activity, such as an intersection of collectors or higher-classified roads. It is intended to provide a concentration of uses for adjacent neighborhoods and pass-by traffic. The land uses should be mixed, but commercial uses may dominate if necessary to achieve city redevelopment or economic development goals. Such centers may be located along arterial corridors, at intersections with collectors or significant local roads.

(b) *Mix of uses*. The allowable distribution of uses within each mixed-use center unified development will be within the following ranges:

Commercial (not including office)	50%—90%
Office	10%—90%
Residential	0%—50%
Institutional	0%—35%

(c) *Permitted uses.*

(1) *Principal uses:* All uses in this list shall be permitted within the MXC district. Uses are categorized based on similar impacts and to ensure diversity of uses. Those uses with special development requirements are identified with an asterisk (*).These special development requirements are identified in Chapter 18, Section 4.

(a) *Commercial category.*

(1) Banks.

(2) Bars, lounges, and nightclubs *.

(3) Brewery*.

(4) Craft food and beverage producer*.

(5) Game/recreation facility.

(6) Health/exercise clubs *.

(7) Marina, recreational *.

(8) Microbrewery*.

(9) Office supplies.

(10) Personal services.

(11) Restaurants.

(12) Retail sales and service.

(b) *Office category.*

(1) Business services.

(2) Financial services.

(3) Medical office/clinics.

(4) Offices.

(5) Public park and associated facilities. (This is a supportive use to the principal uses listed. It is allowed by right, but shall not count towards the minimum permitted mix of uses.)

(6) Veterinary clinics.

(c) *Residential category.*

(1) Reserved.

(2) Reserved.

(3) Reserved.

(4) Multifamily dwelling (16 units per gross acre maximum allowable density).

(5) Live-work units *.

(6) Bed and breakfast inn.

(d) *Institutional category.*

(1) Child care centers *.

(2) House of worship.

(3) Private schools.

(Ord. No. 2011-29, § 2, 11-8-11; Ord. No. 2016-19, § 9, 10-4-16)

Business Impact Estimate

This form should be included in agenda packet for the item under which the proposed ordinance is to be considered, and must be posted on the City's website by the time notice of the proposed ordinance is published.

Proposed ordinance's title/reference:
Ordinance No. 2025-10 – Rezone +/- 0.58 acres to Planned Commercial Development (PCD) and approve the Second Restatement to the Catfish Commons PCD Master Development Agreement (MDA) and Conceptual Development Plan (CDP) (Case No. PRZA-24-0008)

This Business Impact Estimate is provided in accordance with Section 166.041(4), Florida Statutes. If one or more boxes are checked below, this means the City is of the view that a business impact estimate is **not** required by state law[1] for the proposed ordinance, but the City is implementing the procedure required by statutory law to ensure that no inadvertent procedural issue could impact the enactment of the proposed ordinance. This Business Impact Estimate may be revised following its initial posting.

- ☐ The proposed ordinance is required for compliance with Federal or State law or regulation;
- ☐ The proposed ordinance relates to the issuance or refinancing of debt;
- ☐ The proposed ordinance relates to the adoption of budgets or budget amendments, including revenue sources necessary to fund the budget;
- ☐ The proposed ordinance is required to implement a contract or an agreement, including, but not limited to, any Federal, State, local, or private grant, or other financial assistance accepted by the municipal government;
- ☐ The proposed ordinance is an emergency ordinance;
- ☐ The ordinance relates to procurement; or
- ☒ The proposed ordinance is enacted to implement the following:
    a. Development orders, and development permits, as those terms are defined in s. 163.3164; and development agreements as authorized by the Florida Local Government Development Agreement Act under ss. 163.3220-163.3243;
    b. Comprehensive plan amendments and land development regulation amendments initiated by an application by a private party other than the municipality;
    c. Sections 190.005 and 190.046, *Florida Statutes*, regarding community development districts;
    d. Section 553.73, *Florida Statutes*, relating to the *Florida Building Code*; or
    e. Section 633.202, *Florida Statutes*, relating to the *Florida Fire Prevention Code*.

[1] See Section 166.041(4)(c), Florida Statutes.

In accordance with the provisions of controlling law, even notwithstanding the fact that, an exemption noted above may apply, the City hereby publishes the following information:

1. Summary of the proposed ordinance (must include statement of the public purpose, such as serving the public health, safety, morals, and welfare):

The property owners are requesting to rezone ±0.58 acres from Community Commercial (CC) to Planned Commercial Development (PCD) and add the ±0.58 acres into the existing Catfish Commons Planned Commercial Development (PCD), along with approval of the Second Restatement of the Catfish Commons PCD Master Development Agreement (MDA) and Conceptual Development Plan (CDP). The current PCD area is ±3.4 acres. If approved, the overall area of the PCD would expand to ±4.0 acres, and the Second Restatement of the MDA would provide the framework for development within the expanded PCD.

2. An estimate of the direct economic impact of the proposed ordinance on private, for-profit businesses in the City, if any:

(a) An estimate of direct compliance costs that businesses may reasonably incur:
N/A

(b) Any new charge or fee imposed by the proposed ordinance or for which businesses will be financially responsible:
N/A

(c) An estimate of the City's regulatory costs, including estimated revenues from any new charges or fees to cover such costs:
N/A

3. Good faith estimate of the number of businesses likely to be impacted by the proposed ordinance: N/A

4. Additional information the governing body deems useful[2] (if any): N/A

[2] *You may wish to include in this section the methodology or data used to prepare the Business Impact Estimate. For example: City staff solicited comments from businesses in the City as to the potential impact of the proposed ordinance by contacting the local Chamber of Commerce, social media posting, direct mail or direct email, posting on City website, public workshop, etc. You may also wish to include efforts made to reduce the potential fiscal impact on businesses. You may also wish to state here that the proposed ordinance is a generally applicable ordinance that applies to all persons similarly situated (individuals as well as businesses) and, therefore, the proposed ordinance does not affect only businesses*.

CITY COUNCIL AGENDA ITEM

COUNCIL MEETING DATE 3/18/2025

SUBJECT: (H19) First Reading - Ordinance No. 2025-11 - First Amendment to the Summer Trees Plaza PCD Master Development Agreement (Case No. PRZA-25-0001)

DEPARTMENT: Community Development

GOAL: 3 - Quality of Life

RECOMMENDED MOTION: Move to approve Ordinance 2025-11.

SUMMARY: Planning Commission Action (2/27/25): Recommended Approval (4-3)

The property owner requests the proposed amendment to the Master Development Agreement (MDA) for the Summer Trees Plaza Planned Commercial Development (PCD) to allow a broader range of commercial uses in the PCD, consistent with the uses allowed in the City's conventional commercial zoning districts and update the signage and architectural requirements for the PCD to be consistent with the current requirements in the City's Land Development Code (LDC). The Summer Trees Plaza PCD is located on the south side of Taylor Road, between Summer Trees Road and Williamson Boulevard.

Location Map of the Summer Trees Plaza PCD

The Summer Trees Plaza PCD was approved in November 2007, and the subject property has been zoned for commercial development since 1998 (27 years). The PCD was initially planned to be developed with a hotel, conference center, and commercial uses adjacent to Taylor Road. The PCD includes five (5) parcels/sites (Figure 2):

- Two (2) parcels (Site A and B) are developed with commercial uses (PNC Bank and a multi-tenant commercial building in 2012);
- Two (2) parcels are vacant (Site C and D); and
- The southernmost parcel (Site E) was sold to the City of Port Orange in 2007, and in 2010 a stormwater pond for the drainage associated with widening Williamson Boulevard from 2 to 4 lanes was constructed.

The proposed 1st Amendment to the Summer Trees Plaza MDA only pertains to Sites A-D and does not include the city-owned parcel (Site E).

The MDA for the Summer Trees Plaza PCD currently allows commercial uses such as hotels, restaurants, retail, medical and professional offices, assisted living facilities, etc. The additional uses proposed to be added to the list of allowed uses on any of the four sites (Sites A-D) include craft food and beverage producers, microbreweries, and private schools. According to the applicant, the uses are being added to provide more

flexibility for new development and/or redevelopment in the PCD. The three proposed additional uses listed above will be required to comply with all City development requirements in the LDC. For the craft food and beverage producers and microbreweries uses, there are additional special development requirements, which include requirements for screening, storage and parking that will need to be met, if developed. The special development requirements for these two uses are consistent with the special development requirements for these uses in the LDC. The special development requirements for these two uses are listed in Exhibit B of the MDA.

The applicant also requests to add mini-warehouses and motor vehicle and boat storage to the list of allowed uses for Site C and D. The proposed 1st Amendment to the MDA requires the development of a mini-warehouses and/or motor vehicle and boat storage use to meet the standard commercial site requirements (landscape buffers, screening, tree preservation, architecture, traffic concurrency, drainage and other infrastructure, parking, etc.) in the City's LDC, along with the additional special development requirements which include wider and denser landscape buffers, screen walls/fences, and building orientation to provide sufficient screening of these uses from residential areas and/or major roadways. The special development requirements for these two uses are consistent with the special development requirements for these uses in the LDC. The special development requirements for these uses are listed in Exhibit B of the MDA. According to the applicant, in addition to the special development requirements, there is also sufficient separation and existing vegetation between Sites C and D and the nearest residential lots to assist in buffering these uses.

Graphic that shows the Distance between Adjacent Lot Lines and Site C and D in the Summer Trees PCD

The Signage and Architectural/Design Standards sections of the MDA have also been updated to remove outdated signage and architectural requirements that are no longer consistent with the signage and architectural requirements in the LDC. The proposed amendments require all development within the PCD to comply with the City's current commercial signage and architectural requirements in the LDC that apply city-wide, simplify the MDA text, and ensure the standards remain current with current city regulations over time.

According to the applicant, no proposed plans exist for any new development within the PCD, specifically Site C and D. The owner intends to continue to market the vacant sites for sale and has proposed the 1st Amendment to the MDA to make the sites more marketable by adding the uses listed above as possible options. Prior to any development within the PCD, a site plan will be required to be submitted to the city and approved by the Staff Development Review Committee (SDRC). Any development in the PCD will need to meet the standard commercial site requirements (landscape buffers, screening, tree preservation, architecture, traffic concurrency, drainage and other infrastructure, parking, etc.) in the City's LDC, along with any additional special development requirements listed in the MDA.

The Staff Report is attached for more information.

PRESENTER: Penelope Cruz, Tim Burman

ATTACHMENTS:

1.	Ordinance No. 2025-11 w exhibit	Ordinance No. 2025-11 w exhibit.pdf
2.	STAFF REPORT	STAFF REPORT .pdf
3.	Business Impact Estimate - ORD 2025-11 - PRZA-25-0001	Business Impact Estimate - ORD 2025-11 - PRZA-25-0001.docx

Penelope Cruz	Created/Initiated - 2/28/2025
Tim Burman	Approved - 2/28/2025
Shannon Balmer	Approved - 2/28/2025
Wayne Clark	Final Approval - 3/7/2025

ORDINANCE NO. 2025-11

AN ORDINANCE OF THE CITY OF PORT ORANGE, VOLUSIA COUNTY, FLORIDA, APPROVING THE FIRST AMENDMENT TO THE MASTER DEVELOPMENT AGREEMENT FOR THE SUMMER TREES PLAZA PLANNED COMMERCIAL DEVELOPMENT (PCD) TO ALLOW ADDITIONAL COMMERCIAL USES CONSISTENT WITH THE USES ALLOWED IN THE CITY'S CONVENTIONAL COMMERCIAL ZONING DISTRICTS AND UPDATE SIGNAGE AND ARCHITECTURE REQUIREMENTS TO BE CONSISTENT WITH CURRENT THE LAND DEVELOPMENT CODE S; PROVIDING FOR THE REPEAL OF CONFLICTING ORDINANCES; PROVIDING FOR SEVERABILITY OF; AND PROVIDING AN EFFECTIVE DATE.

WHEREAS, the City and Developer desire to enter into the First Amendment to the Master Development Agreement for the Summer Trees Plaza Planned Commercial Development (PCD) (hereinafter referred to as the "First Amendment"); and

WHEREAS, the Owner submitted a request to the Planning Commission to approve the First Amendment; and

WHEREAS, a public hearing was held following public notice as prescribed by ordinance; and

WHEREAS, the Planning Commission has by majority vote recommended approval of the proposed First Amendment; and

WHEREAS, the City Council has approved by a majority vote of the members present the First Amendment.

NOW, THEREFORE, BE IT ORDAINED BY THE CITY COUNCIL OF THE CITY OF PORT ORANGE, VOLUSIA COUNTY, FLORIDA:

Section 1. The City Council of the City of Port Orange does hereby approve the

First Amendment (attached hereto as **Exhibit "1"**).

Section 2. The Mayor and City Clerk are hereby authorized to execute said First Amendment.

Section 3. All ordinances or parts of ordinances in conflict with the provisions of this ordinance are hereby repealed to the extent of such conflict.

Section 4. If any provision of this ordinance or the application thereof to any person or circumstance is held invalid, the invalidity shall not affect other provisions or applications of this ordinance which can be given effect without the invalid provision or application, and to this end, the provisions of this ordinance are declared severable.

Section 5. This ordinance shall become effective immediately upon adoption.

_____
MAYOR SCOTT STILTNER

ATTEST:

_____
Robin L. Fenwick, MMC, City Clerk

Passed on first reading on the day of _____, 2025

Passed and adopted on second and final reading on the day of _____,2025

Reviewed and Approved: _____
Shannon K. Balmer, Senior Assistant City Attorney

Exhibit 1

Document Prepared By
Storch Law Firm
420 South Nova Road
Daytona Beach, FL 32114

Return recorded document to:
City of Port Orange
1000 City Center Circle
Port Orange, FL 32129

FIRST AMENDMENT TO
THE SUMMER TREES PLAZA
MASTER DEVELOPMENT AGREEMENT FOR
PLANNED COMMERCIAL DEVELOPMENT

THIS FIRST AMENDMENT TO THE SUMMER TREES PLAZA THE MASTER DEVELOPMENT AGREEMENT FOR PLANNED COMMERCIAL DEVLEOPMENT (the "**First Amendment**") is made this ___ day of _____, 2025, by and among the City of Port Orange, a political subdivision of the State of Florida ("**City**") whose address is 1000 City Center Circle, Port Orange, Florida 32119; and Sun Glow Construction, Inc., a Florida corporation ("**Sun Glow**"), whose address is 230 N. Beach Street, Suite 4, Daytona Beach, Florida 32114.

WHEREAS, the City and Sun Glow previously entered into an agreement and covenant to bind their successors and assigns to the terms and provisions of a development agreement entitled "The Summer Trees Plaza Master Development Agreement for Planned Commercial Development", recorded in Official Records Book 6165, Page 4012, of the Public Records of Volusia County, Florida (the "**Master Development Agreement**"), relating to property described therein; and

WHEREAS, the only property subject to this First Amendment are more particularly described in the legal description attached hereto and incorporated herein as Exhibit "A" (the "Property");

WHEREAS, the City and Sun Glow wish to further amend the Master Development Agreement for the purposes of amending the permitted use in the Master Development Agreement.

NOW, **THEREFORE**, the parties, in consideration of the mutual and covenants contained herein, and with the intent to be legally bound and to bind their successors and assigns, due hereby agree as follows:

1. The recitals and premises set forth above are true and correct, form a material part of this Ninth Amendment and are incorporated herein by reference.

2. Section 4(a) of the Master Development Agreement is hereby amended by underline and strikethrough to read as follows:

4. PERMITTED USES FOR SUMMER TREES PLAZA.

(a) The Permitted Uses in Summer Trees Plaza shall include the following:

Appliance/Electrical Repair Shops;
Assisted Living Facilities/Nursing Homes;

Banks and Financial Services with drive-thru facilities;
Business Services;
Camouflaged and Monopole Communication Towers;
Child Care;
Clubs, lodges and fraternal organizations;
Convenience Stores (without fuel operations);
Craft food and beverage producer (designed in accordance with the special development requirements in Exhibit B);
Health/exercise clubs;
Hotels/Motels;
Fleet-based services;
Funeral Homes;
Furniture and Appliance Services
Medical Offices/Clinics;
Microbrewery (designed in accordance with the special development requirements in Exhibit B);
Mini warehouses (limited to Parcel Nos. 631900000222 and 631900000220 and designed in accordance with special development requirements in Exhibit B)
Motor Vehicle and Boat Storage (limited to Parcel Nos. 631900000222 and 631900000220 and designed in accordance with special development requirements in Exhibit B)
Municipal Uses, including Stormwater Retention;
Office Supplies;
Offices;
Personal Services;
Private schools;
Retail Home Building Materials;
Retail Nursery and Garden Supplies;
Retail Sales and Services;
Restaurant (Type "A" Site Down Only);
Veterinary Clinics; and
Xerographic and Offset Printing.

3. Section 9 of the Master Development Agreement is hereby amended to read as follows:

9. SIGNAGE. The applicable City signage ordinances in effect at the time of development, as defined by the Code, shall control.

4. Section 10 of the Master Development Agreement is hereby amended to read as follows:

10. ARCHITECTURAL/DESIGN STANDARDS. The applicable City architectural standards in effect at the time of development, as defined by the Code, shall control.

5. Section 11 of the Master Development Agreement is hereby amended to read as follows:

> **11. EXPIRATION.** Development of the Summer Trees Plaza shall commence within ten (10) years from the effective date of the First Amendment. Failure to comply with the schedule set out above shall cause this Agreement to lapse unless the schedule is modified by mutual agreement of the Owner and the City. The term "development" shall be as defined by the Code.

6. This First Amendment shall be effective upon the recording of the First Amendment in the Public Records of Volusia County, Florida at the expense of Sun Glow.

7. The Master Development Agreement, as previously enacted, shall remain in full force and effect except with respect to those matters specifically amended by this First Amendment.

[REMAINDER OF THIS PAGE LEFT BLANK INTENTIONALLY]

IN WITNESS WHEREOF, the parties have executed this Ninth Amendment, by and through their duly authorized representatives, on the respective dates below:

"CITY"

CITY OF PORT ORANGE, a Florida municipal corporation

WITNESSES:

_____
Print Name: _____

By: _____
Scott Stiltner, Mayor

_____
Print Name: _____

_____
Print Name: _____

Attest: _____
Robin L. Fenwick, MMC, City Clerk

_____
Print Name: _____

STATE OF FLORIDA
COUNTY OF VOLUSIA

The foregoing instrument was acknowledged before me by means of [**XX]** physical presence or [_] online notarization this ____ day of _____, 2025, by _____ and Scott Stiltner, Mayor and Robin L. Fenwick, City Clerk, both of the City of Port Orange, a Florida municipal corporation, on behalf of the City. They are personally known to me and did not take an oath.

_____
Notary: Type, Print or Stamp Name

My Commission Expires:

"Sun Glow"

WITNESSES:

SUN GLOW CONSTRUCTION, INC.,
a Florida corporation

_____
Print Name: _____

_____

By: _____

_____
Print Name: _____ Its: _____

STATE OF _____
COUNTY OF _____

The foregoing instrument was acknowledged before me by means of [_] physical presence or [_] online notarization on this ___ day of _____, 2025, by _____, as _____ of Sun Glow Construction, Inc., a Florida corporation. He/she is personally known to me or produced _____ as identification and did not take an oath.

(Seal)

_____
Notary Public

EXHIBIT "A"
LEGAL DESCRIPTION

SITE C

LEGAL DESCRIPTION:

A PORTION OF THAT UNPLATTED LAND LYING IN SECTION 19, TOWNSHIP 16 SOUTH, RANGE 33 EAST, BEING DESCRIBED AS FOLLOWS:
COMMENCE AT THE NORTHWEST CORNER OF SUMMER TREES, UNIT I, AS RECORDED IN MAP BOOK 34, PAGES 10-11, OF THE PUBLIC RECORDS OF VOLUSIA COUNTY, FLORIDA; THENCE N63°59'01"E, ALONG THE NORTH LINE OF SAID SUMMER TREES, UNIT I, SAID LINE ALSO BEING THE SOUTH LINE OF TAYLOR ROAD (A 100 FOOT RIGHT OF WAY PER SAID SUMMER TREES, UNIT I), A DISTANCE OF 332.52 FEET TO THE NORTHEAST CORNER OF SAID SUMMER TREES, UNIT I; THENCE CONTINUE ALONG SAID SOUTH LINE OF TAYLOR ROAD, NORTH 63°59'01" EAST, A DISTANCE OF 175.99 FEET TO THE NORTHWEST CORNER OF CNB SUBDIVISION, AS RECORDED IN MAP BOOK 46, PAGE 91; THENCE SOUTH 00°27'55" EAST ALONG THE WEST LINE OF SAID CNB SUBDIVISION, A DISTANCE OF 267.38 FEET TO THE SOUTHWEST CORNER OF SAID CNB SUBDIVISION AND THE POINT OF BEGINNING; THENCE SOUTH 89°53'35" EAST ALONG THE SOUTH LINE OF SAID CNB SUBDIVISION AND THE SOUTH LINE OF TAYLOR / AIRPORT SUBDIVISION, AS RECORDED IN MAP BOOK 49, PAGE 1, A DISTANCE OF 231.68 FEET; THENCE DEPARTING SAID SOUTH LINE OF TAYLOR / AIRPORT SUBDIVISION, SOUTH 00°26'30" EAST, A DISTANCE OF 20.00 FEET; THENCE SOUTH 89°53'35" EAST, A DISTANCE OF 24.90 FEET; THENCE SOUTH 00°17'33" EAST, A DISTANCE OF 284.63 FEET; THENCE SOUTH 89°32'51" WEST, A DISTANCE OF 104.83 FEET TO A POINT ON THE EAST LINE OF SUMMER TREES UNIT III-A, AS RECORDED IN MAP BOOK 37, PAGE 62; THENCE THE NEXT THREE (3) COURSES ALONG SAID EAST LINE OF SUMMER TREES UNIT III-A; (1) NORTH 25°18'17" WEST, A DISTANCE OF 206.92 FEET; (2) THENCE SOUTH 62°33'25" WEST, A DISTANCE OF 82.00 FEET; (3) THENCE NORTH 27°26'35" WEST, A DISTANCE OF 145.00 FEET TO THE NORTHEAST CORNER OF SAID SUMMER TREES UNIT III-A; THENCE DEPARTING SAID BOUNDARY LINE OF SUMMER TREES, UNIT III-A, THENCE NORTH 69°27'44" EAST, A DISTANCE OF 79.76 FEET TO THE POINT OF BEGINNING.

CONTAINING: 65,165 SQUARE FEET OR 1.5 ACRES OF LAND, MORE OR LESS.

AND

SITE D

LEGAL DESCRIPTION:

A PORTION OF THAT UNPLATTED LAND LYING IN SECTION 19, TOWNSHIP 16 SOUTH, RANGE 33 EAST, BEING DESCRIBED AS FOLLOWS:

COMMENCE AT THE NORTHWEST CORNER OF SUMMER TREES, UNIT I, AS RECORDED IN MAP BOOK 34, PAGES 10-11, OF THE PUBLIC RECORDS OF VOLUSIA COUNTY, FLORIDA; THENCE N63°59'01"E, ALONG THE NORTH LINE OF SAID SUMMER TREES, UNIT I, SAID LINE ALSO BEING THE SOUTH LINE OF TAYLOR ROAD (A 100 FOOT RIGHT OF WAY PER SAID SUMMER TREES, UNIT I), A DISTANCE OF 332.52 FEET TO THE NORTHEAST CORNER OF SAID SUMMER TREES, UNIT I; THENCE CONTINUE ALONG SAID SOUTH LINE OF TAYLOR ROAD, NORTH 63°59'01" EAST, A DISTANCE OF 175.99 FEET

TO THE NORTHWEST CORNER OF CNB SUBDIVISION, AS RECORDED IN MAP BOOK 46, PAGE 91; THENCE SOUTH 00°27'55" EAST ALONG THE WEST LINE OF SAID CNB SUBDIVSION, A DISTANCE OF 267.38 FEET TO THE SOUTHWEST CORNER OF SAID CNB SUBDIVISION; THENCE SOUTH 89°53'35" EAST ALONG THE SOUTH LINE OF SAID CNB SUBDIVISION AND THE SOUTH LINE OF TAYLOR / AIRPORT SUBDIVISION, AS RECORDED IN MAP BOOK 49, PAGE 1, A DISTANCE OF 231.68 FEET; THENCE DEPARTING SAID SOUTH LINE OF TAYLOR / AIRPORT SUBDIVISION, SOUTH 00°26'30" EAST, A DISTANCE OF 20.00 FEET; THENCE SOUTH 89°53'35" EAST, A DISTANCE OF 24.90 FEET TO THE POINT OF BEGINNING; THENCE CONTINUE SOUTH 89°53'35" EAST, A DISTANCE OF 362.76 FEET TO A POINT ON THE WEST LINE OF AIRPORT ROAD COMMERCIAL SUBDIVISION, AS RECORDED IN MAP BOOK 53, PAGES 135-138; THENCE SOUTH 00°27'55" EAST ALONG SAID WEST LINE OF AIRPORT ROAD COMMERCIAL SUBDIVISION, A DISTANCE OF 220.86 FEET TO THE SOUTHWEST CORNER OF SAID AIRPORT ROAD COMMERCIAL SUBDIVISION; THENCE NORTH 89°32'05" EAST ALONG THE SOUTH LINE OF SAID AIRPORT ROAD COMMERCIAL SUBDIVISION, A DISTANCE OF 15.00 FEET TO THE NORTHWEST CORNER OF TAYLOR WOODS II, AS RECORDED IN MAP BOOK 42, PAGE 200; THENCE SOUTH 00°27'55" EAST ALONG THE WEST LINE OF SAID TAYLOR WOODS II, A DISTANCE OF 60.23 FEET; THENCE DEPARTING SAID WEST LINE OF TAYLOR WOODS II, SOUTH 89°32'51" WEST, A DISTANCE OF 378.60 FEET; THENCE NORTH 00°17'33" WEST, A DISTANCE OF 284.63 FEET; TO THE POINT OF BEGINNING.

CONTAINING: 103,632 SQUARE FEET OR 2.38 ACRES OF LAND, MORE OR LESS.

Exhibit B
Special Development Requirements

Craft food and beverage producer

(a) Required to include one or more accessory uses such as a tasting room, tap room, restaurant, retail, demonstration area, education and training facility or other use incidental to the brewery and open and accessible to the public.
(b) Access and loading and unloading facilities are required to be internal to the site or development or located at the back (or side not adjacent to a single- family or duplex residential use or zoning district) of building.
(c) Required parking is calculated based on square footage proposed for each use (example: manufacturing parking ratio + retail parking ratio based on square-footage).
(d) All outdoor equipment and storage of materials, including silos, products for distribution, and other items requiring long-term storage shall be allowed in areas behind building, in enclosed buildings, or otherwise screened, using architectural features consistent with the principal structure, from the public right of way or a single-family or duplex residential use or residential zoning district. Spent or used grain or similar materials that can attract rodents shall be stored in sealed containers.
(e) Off-site distribution via semi-trailer (articulated combination vehicle with a permanent or semi-permanent pivoting joint; does not include a straight or box truck with no articulation) is only permitted if the truck traffic is limited to streets classified as arterial on the Comprehensive Plan Roadway Functional Classification Map.
(f) Outdoor seating is not permitted to be located on any side adjacent to a single-family or duplex residential use or residential zoning district.
(g) Shall comply with all applicable federal, state and local laws.

Microbrewery

(a) Required to include one or more accessory uses such as a tasting room, tap room, restaurant, retail, demonstration area, education and training facility or other use incidental to the microbrewery and open and accessible to the public.
(b) Decorative silos that are designed to be compatible and integral with the principal structure are permitted. No additional sign area is permitted for decorative silos; however, permitted wall sign area for the principal structure or building may be transferred to the silo, provided that silo signage is only situated on the sides of the silo visible from a right-of- way. The maximum height shall not exceed the maximum building height of the zoning district.
(c) Access and loading and unloading facilities are required to be internal to the site or development or located at the back (or side not adjacent to a single-family or duplex residential use or zoning district) building.
(d) Required parking is calculated based on square footage proposed for each use (example: manufacturing parking ratio + bar parking ratio based on square-footage).
(e) Storage of materials, including silos, products for distribution, and other items requiring long-term storage shall be allowed in areas behind building (or a side not adjacent to a residential use or zoning district), in enclosed buildings, or otherwise screened from the public right of way or a single-family or duplex residential use or residential zoning district- Spent or used grain shall be stored in sealed containers.
(f) Off-site distribution via semi-trailer (articulated combination vehicle with a permanent or semi-permanent pivoting joint; does not include a straight or box truck with no articulation) is only permitted if the truck traffic is limited to streets classified as arterial on the Comprehensive Plan Roadway Functional Classification Map.
(g) Outdoor seating is not permitted to be located on any side adjacent to a single-family or duplex

residential use or residential zoning district.

(h) Shall comply with all applicable federal, state and local laws.

Mini warehouses

(a) Warehouse buildings shall be screened from any public rights-of-way by a six-foot high opaque fence or wall with a type 2 bufferyard planted along the street side of the fence or wall. Bufferyard requirements may be increased in accordance with chapter 13 of the Land Development Code.

(b) All storage unit doors shall face interior to the development.

(c) The proposed site shall front on or have driveway access to an arterial roadway.

Motor Vehicle and Boat Storage

(a) The proposed site shall front on or have driveway access to an arterial roadway.

(b) Buffering shall be provided based on a land use intensity factor of six for completely enclosed facilities and seven for fenced facilities.

(c) Outside storage shall be completely enclosed within a six- to eight-foot-high opaque fence or wall.

(d) Vehicles shall include automobiles, trucks, vans, boats, boat trailers, recreational vehicles, and other similar vehicles which are customarily owned, rented or leased by the average family. Such vehicles shall be licensed and fully operational at all times. Towing to and impoundment at the facility of any inoperable vehicle or appurtenance thereof shall not be permitted.

(e) Vehicle washing shall be confined to a commercial facility or pervious surface in compliance with the water conservation regulations of the city.

(f) Vehicle servicing shall be limited to regular maintenance items such as changing oil, tires, batteries, and other similar activities. Mechanical or body repair, painting, engine rebuilding, or other similar work which would customarily be performed at a motor vehicle service center shall not be permitted.

(g) Living quarters for a resident manager may be permitted, provided such quarters are occupied by the manager.

(h) Required parking shall be provided at a ratio of one space for each ten storage stalls or fraction thereof, plus one space for each employee at the largest shift and two spaces if resident manager living quarters are provided.

STAFF REPORT

1st Amendment to the Master Development Agreement for the Summer Trees Plaza Planned Commercial Development
CASE NO. PRZA-25-0001

REQUEST:	To approve the 1st Amendment to the Master Development Agreement for the Summer Trees Plaza Planned Commercial Development (PCD) to allow a broader range of commercial uses in the PCD, consistent with the uses allowed in the City's conventional commercial zoning districts and update outdated language related to signage and architecture.
LOCATION:	Southside of Taylor Road, between Summer Trees Road and Williamson Boulevard (See location map below)
APPLICANT	Storch Law Firm c/o A, Joseph Posey, Jr.
PROPERTY OWNER:	Sun Glow Construction, Inc.
STAFF CONTACT:	Suzette Cameron, Senior Planner
STAFF RECOMMENDATION:	Approval
PLANNING COMMISSION:	Recommended Approval 4-3 (February 27, 2025)
CITY COUNCIL:	March 18, 2025

INTRODUCTION

The property owner requests the proposed amendment to the Master Development Agreement (MDA) for the Summer Trees Plaza Planned Commercial Development (PCD) to allow a broader range of commercial uses in the PCD, consistent with the uses allowed in the City's conventional commercial zoning districts and update the signage and architectural requirements for the PCD to be consistent with the current requirements in the City's Land Development Code (LDC). The Summer Trees Plaza PCD is located on the south side of Taylor Road, between Summer Trees Road and Williamson Boulevard.

Figure 1. Location Map

PROPOSED AMENDMENT

The Summer Trees Plaza PCD was approved in November 2007, and the subject property has been zoned for commercial development since 1998 (27 years). The PCD was initially planned to be developed with a hotel, conference center, and commercial uses adjacent to Taylor Road. The PCD includes five (5) parcels/sites (Figure 2):

- Two (2) parcels (Site A and B) are developed with commercial uses (PNC Bank and a multi-tenant commercial building);
- Two (2) parcels are vacant (Site C and D); and
- The southernmost parcel (Site E) was sold to the City of Port Orange in 2007, and in 2010 a stormwater pond for the drainage associated with widening Williamson Boulevard was constructed.

The proposed 1st Amendment to the Summer Trees Plaza MDA only pertains to Sites A-D and **does not** include the city-owned parcel (Site E). Figure 2 shows the location of the five parcels and the approximate distance from the nearest residential lots to the two vacant sites that remain.

Figure 2. Summer Trees Plaza PCD Amendment Area

The MDA for the Summer Trees Plaza PCD currently allows commercial uses such as hotels, restaurants, retail, medical and professional offices, assisted living facilities, etc. The additional uses proposed to be added to the list of allowed uses on any of the four

sites (Sites A-D) include 1) craft food and beverage producers, 2) microbreweries, and 3) private schools. According to the applicant, the uses are being added to provide more flexibility for new development and/or redevelopment in the PCD. The three proposed additional uses listed above will be required to comply with all City development requirements in the Land Development Code (LDC). For the craft food and beverage producers and microbreweries, there are additional special development requirements, which include requirements for screening, storage, and parking that will need to be met if developed. The special development requirements for these two uses are consistent with the special development requirements for these uses in the LDC. The special development requirements are listed in Exhibit B of the MDA.

In addition to the uses proposed to be allowed on Sites A-D, listed above, the applicant also requests to add mini-warehouses and motor vehicle and boat storage to the list of allowed uses on Sites C and D (See Figure 2). The proposed 1st Amendment to the MDA requires the development of mini-warehouses and/or motor vehicle and boat storage use to meet the standard commercial site requirements (landscape buffers, screening, tree preservation, architecture, traffic concurrency, drainage and other infrastructure, parking, etc.) in the City's LDC, along with the additional special development requirements which include wider landscape buffers, screen walls/fences, and building orientation to provide sufficient screening of these uses from residential areas and/or major roadways. The special development requirements for these uses are listed in Exhibit B of the MDA.

According to the applicant, no proposed plans exist for any new development within the PCD, specifically Site C and D. The owner intends to continue to market the vacant sites for sale and has proposed the 1st Amendment to the MDA to make the sites more marketable by adding the uses listed above as possible options. While the vacant sites have been on the market for several years, the owner has recently been approached about developing a mini-warehouse facility with a motor vehicle and boat storage. Before any development within the PCD, a site plan must be submitted to the City and approved by the Staff Development Review Committee (SDRC). Any development in the PCD will be needed to meet the standard commercial site requirements (landscape buffers, screening, tree preservation, architecture, traffic concurrency, drainage and other infrastructure, parking, etc.) in the City's Land Development Code, along with any additional special development requirements listed in the MDA.

The Signage and Architectural/Design Standards sections of the MDA have been also updated to remove outdated signage and architectural requirements that are no longer consistent with the signage and architectural requirements in the LDC. The proposed amendments require all development within the PCD to comply with the City's current commercial signage and architectural requirements in the LDC that apply city-wide, simplify the MDA text, and ensure the standards remain current with current city regulations over time.

CONSISTENCY WITH THE COMPREHENSIVE PLAN

The property is designated *Office/Residential Transition* on the Future Land Use (FLU) map. The original MDA was found to be consistent with the Comprehensive Plan when it was approved in 2007. The proposed 1st Amendment does not change the FLU

designation for the subject property and is consistent with the general intent of the City's Comprehensive Plan.

PUBLIC NOTICE
Public Notice signs were posted along Taylor Road and Sumer Trees Road on January 30, 2025. As of the posting of this agenda, staff have received four (4) phone calls, which were general inquiries regarding the proposed PCD Amendment.

RECOMMENDATION
Staff recommends approval of the 1st Amendment to the Summer Trees Plaza PCD Master Development Agreement.

ATTACHMENT
Exhibit 1 - 1st Amendment to the Master Development Agreement for Summer Trees Plaza Planned Commercial Development

Exhibit 1

Document Prepared By
Storch Law Firm
420 South Nova Road
Daytona Beach, FL 32114

Return recorded document to:
City of Port Orange
1000 City Center Circle
Port Orange, FL 32129

FIRST AMENDMENT TO
THE SUMMER TREES PLAZA
MASTER DEVELOPMENT AGREEMENT FOR
PLANNED COMMERCIAL DEVELOPMENT

THIS FIRST AMENDMENT TO THE SUMMER TREES PLAZA THE MASTER DEVELOPMENT AGREEMENT FOR PLANNED COMMERCIAL DEVLEOPMENT (the "**First Amendment**") is made this ___ day of _____, 2025, by and among the City of Port Orange, a political subdivision of the State of Florida ("**City**") whose address is 1000 City Center Circle, Port Orange, Florida 32119; and Sun Glow Construction, Inc., a Florida corporation ("**Sun Glow**"), whose address is 230 N. Beach Street, Suite 4, Daytona Beach, Florida 32114.

WHEREAS, the City and Sun Glow previously entered into an agreement and covenant to bind their successors and assigns to the terms and provisions of a development agreement entitled "The Summer Trees Plaza Master Development Agreement for Planned Commercial Development", recorded in Official Records Book 6165, Page 4012, of the Public Records of Volusia County, Florida (the "**Master Development Agreement**"), relating to property described therein; and

WHEREAS, the only property subject to this First Amendment are more particularly described in the legal description attached hereto and incorporated herein as Exhibit "A" (the "Property");

WHEREAS, the City and Sun Glow wish to further amend the Master Development Agreement for the purposes of amending the permitted use in the Master Development Agreement.

NOW, **THEREFORE**, the parties, in consideration of the mutual and covenants contained herein, and with the intent to be legally bound and to bind their successors and assigns, due hereby agree as follows:

1. The recitals and premises set forth above are true and correct, form a material part of this Ninth Amendment and are incorporated herein by reference.

2. Section 4(a) of the Master Development Agreement is hereby amended by underline and strikethrough to read as follows:

4. PERMITTED USES FOR SUMMER TREES PLAZA.

(a) The Permitted Uses in Summer Trees Plaza shall include the following:

Appliance/Electrical Repair Shops;
Assisted Living Facilities/Nursing Homes;

Banks and Financial Services with drive-thru facilities;
Business Services;
Camouflaged and Monopole Communication Towers;
Child Care;
Clubs, lodges and fraternal organizations;
Convenience Stores (without fuel operations);
Craft food and beverage producer (designed in accordance with the special development requirements in Exhibit B);
Health/exercise clubs;
Hotels/Motels;
Fleet-based services;
Funeral Homes;
Furniture and Appliance Services
Medical Offices/Clinics;
Microbrewery (designed in accordance with the special development requirements in Exhibit B);
Mini warehouses (limited to Parcel Nos. 631900000222 and 631900000220 and designed in accordance with special development requirements in Exhibit B)
Motor Vehicle and Boat Storage (limited to Parcel Nos. 631900000222 and 631900000220 and designed in accordance with special development requirements in Exhibit B)
Municipal Uses, including Stormwater Retention;
Office Supplies;
Offices;
Personal Services;
Private schools;
Retail Home Building Materials;
Retail Nursery and Garden Supplies;
Retail Sales and Services;
Restaurant (Type "A" Site Down Only);
Veterinary Clinics; and
Xerographic and Offset Printing.

3. Section 9 of the Master Development Agreement is hereby amended to read as follows:

9. SIGNAGE. The applicable City signage ordinances in effect at the time of development, as defined by the Code, shall control.

4. Section 10 of the Master Development Agreement is hereby amended to read as follows:

10. ARCHITECTURAL/DESIGN STANDARDS. The applicable City architectural standards in effect at the time of development, as defined by the Code, shall control.

5. Section 11 of the Master Development Agreement is hereby amended to read as follows:

> **11. EXPIRATION.** Development of the Summer Trees Plaza shall commence within ten (10) years from the effective date of the First Amendment. Failure to comply with the schedule set out above shall cause this Agreement to lapse unless the schedule is modified by mutual agreement of the Owner and the City. The term "development" shall be as defined by the Code.

6. This First Amendment shall be effective upon the recording of the First Amendment in the Public Records of Volusia County, Florida at the expense of Sun Glow.

7. The Master Development Agreement, as previously enacted, shall remain in full force and effect except with respect to those matters specifically amended by this First Amendment.

[REMAINDER OF THIS PAGE LEFT BLANK INTENTIONALLY]

IN WITNESS WHEREOF, the parties have executed this Ninth Amendment, by and through their duly authorized representatives, on the respective dates below:

"CITY"

CITY OF PORT ORANGE, a Florida municipal corporation

WITNESSES:

_____
Print Name: _____

By: _____
Scott Stiltner, Mayor

_____
Print Name: _____

_____
Print Name: _____

Attest: _____
Robin L. Fenwick, MMC, City Clerk

_____
Print Name: _____

STATE OF FLORIDA
COUNTY OF VOLUSIA

The foregoing instrument was acknowledged before me by means of [**XX]** physical presence or [_] online notarization this ____ day of _____, 2025, by _____ and Scott Stiltner, Mayor and Robin L. Fenwick, City Clerk, both of the City of Port Orange, a Florida municipal corporation, on behalf of the City. They are personally known to me and did not take an oath.

_____
Notary: Type, Print or Stamp Name

My Commission Expires:

"Sun Glow"

WITNESSES:

SUN GLOW CONSTRUCTION, INC.,
a Florida corporation

_____
Print Name: _____

_____

By: _____

_____
Print Name: _____ Its: _____

STATE OF _____
COUNTY OF _____

The foregoing instrument was acknowledged before me by means of [_] physical presence or [_] online notarization on this ___ day of _____, 2025, by _____, as _____ of Sun Glow Construction, Inc., a Florida corporation. He/she is personally known to me or produced _____ as identification and did not take an oath.

(Seal)

_____
Notary Public

EXHIBIT "A"
LEGAL DESCRIPTION

SITE C

LEGAL DESCRIPTION:

A PORTION OF THAT UNPLATTED LAND LYING IN SECTION 19, TOWNSHIP 16 SOUTH, RANGE 33 EAST, BEING DESCRIBED AS FOLLOWS:
COMMENCE AT THE NORTHWEST CORNER OF SUMMER TREES, UNIT I, AS RECORDED IN MAP BOOK 34, PAGES 10-11, OF THE PUBLIC RECORDS OF VOLUSIA COUNTY, FLORIDA; THENCE N63°59'01"E, ALONG THE NORTH LINE OF SAID SUMMER TREES, UNIT I, SAID LINE ALSO BEING THE SOUTH LINE OF TAYLOR ROAD (A 100 FOOT RIGHT OF WAY PER SAID SUMMER TREES, UNIT I), A DISTANCE OF 332.52 FEET TO THE NORTHEAST CORNER OF SAID SUMMER TREES, UNIT I; THENCE CONTINUE ALONG SAID SOUTH LINE OF TAYLOR ROAD, NORTH 63°59'01" EAST, A DISTANCE OF 175.99 FEET TO THE NORTHWEST CORNER OF CNB SUBDIVISION, AS RECORDED IN MAP BOOK 46, PAGE 91; THENCE SOUTH 00°27'55" EAST ALONG THE WEST LINE OF SAID CNB SUBDIVISION, A DISTANCE OF 267.38 FEET TO THE SOUTHWEST CORNER OF SAID CNB SUBDIVISION AND THE POINT OF BEGINNING; THENCE SOUTH 89°53'35" EAST ALONG THE SOUTH LINE OF SAID CNB SUBDIVISION AND THE SOUTH LINE OF TAYLOR / AIRPORT SUBDIVISION, AS RECORDED IN MAP BOOK 49, PAGE 1, A DISTANCE OF 231.68 FEET; THENCE DEPARTING SAID SOUTH LINE OF TAYLOR / AIRPORT SUBDIVISION, SOUTH 00°26'30" EAST, A DISTANCE OF 20.00 FEET; THENCE SOUTH 89°53'35" EAST, A DISTANCE OF 24.90 FEET; THENCE SOUTH 00°17'33" EAST, A DISTANCE OF 284.63 FEET; THENCE SOUTH 89°32'51" WEST, A DISTANCE OF 104.83 FEET TO A POINT ON THE EAST LINE OF SUMMER TREES UNIT III-A, AS RECORDED IN MAP BOOK 37, PAGE 62; THENCE THE NEXT THREE (3) COURSES ALONG SAID EAST LINE OF SUMMER TREES UNIT III-A; (1) NORTH 25°18'17" WEST, A DISTANCE OF 206.92 FEET; (2) THENCE SOUTH 62°33'25" WEST, A DISTANCE OF 82.00 FEET; (3) THENCE NORTH 27°26'35" WEST, A DISTANCE OF 145.00 FEET TO THE NORTHEAST CORNER OF SAID SUMMER TREES UNIT III-A; THENCE DEPARTING SAID BOUNDARY LINE OF SUMMER TREES, UNIT III-A, THENCE NORTH 69°27'44" EAST, A DISTANCE OF 79.76 FEET TO THE POINT OF BEGINNING.

CONTAINING: 65,165 SQUARE FEET OR 1.5 ACRES OF LAND, MORE OR LESS.

AND

SITE D

LEGAL DESCRIPTION:

A PORTION OF THAT UNPLATTED LAND LYING IN SECTION 19, TOWNSHIP 16 SOUTH, RANGE 33 EAST, BEING DESCRIBED AS FOLLOWS:

COMMENCE AT THE NORTHWEST CORNER OF SUMMER TREES, UNIT I, AS RECORDED IN MAP BOOK 34, PAGES 10-11, OF THE PUBLIC RECORDS OF VOLUSIA COUNTY, FLORIDA; THENCE N63°59'01"E, ALONG THE NORTH LINE OF SAID SUMMER TREES, UNIT I, SAID LINE ALSO BEING THE SOUTH LINE OF TAYLOR ROAD (A 100 FOOT RIGHT OF WAY PER SAID SUMMER TREES, UNIT I), A DISTANCE OF 332.52 FEET TO THE NORTHEAST CORNER OF SAID SUMMER TREES, UNIT I; THENCE CONTINUE ALONG SAID SOUTH LINE OF TAYLOR ROAD, NORTH 63°59'01" EAST, A DISTANCE OF 175.99 FEET

TO THE NORTHWEST CORNER OF CNB SUBDIVISION, AS RECORDED IN MAP BOOK 46, PAGE 91; THENCE SOUTH 00°27'55" EAST ALONG THE WEST LINE OF SAID CNB SUBDIVSION, A DISTANCE OF 267.38 FEET TO THE SOUTHWEST CORNER OF SAID CNB SUBDIVISION; THENCE SOUTH 89°53'35" EAST ALONG THE SOUTH LINE OF SAID CNB SUBDIVISION AND THE SOUTH LINE OF TAYLOR / AIRPORT SUBDIVISION, AS RECORDED IN MAP BOOK 49, PAGE 1, A DISTANCE OF 231.68 FEET; THENCE DEPARTING SAID SOUTH LINE OF TAYLOR / AIRPORT SUBDIVISION, SOUTH 00°26'30" EAST, A DISTANCE OF 20.00 FEET; THENCE SOUTH 89°53'35" EAST, A DISTANCE OF 24.90 FEET TO THE POINT OF BEGINNING; THENCE CONTINUE SOUTH 89°53'35" EAST, A DISTANCE OF 362.76 FEET TO A POINT ON THE WEST LINE OF AIRPORT ROAD COMMERCIAL SUBDIVISION, AS RECORDED IN MAP BOOK 53, PAGES 135-138; THENCE SOUTH 00°27'55" EAST ALONG SAID WEST LINE OF AIRPORT ROAD COMMERCIAL SUBDIVISION, A DISTANCE OF 220.86 FEET TO THE SOUTHWEST CORNER OF SAID AIRPORT ROAD COMMERCIAL SUBDIVISION; THENCE NORTH 89°32'05" EAST ALONG THE SOUTH LINE OF SAID AIRPORT ROAD COMMERCIAL SUBDIVISION, A DISTANCE OF 15.00 FEET TO THE NORTHWEST CORNER OF TAYLOR WOODS II, AS RECORDED IN MAP BOOK 42, PAGE 200; THENCE SOUTH 00°27'55" EAST ALONG THE WEST LINE OF SAID TAYLOR WOODS II, A DISTANCE OF 60.23 FEET; THENCE DEPARTING SAID WEST LINE OF TAYLOR WOODS II, SOUTH 89°32'51" WEST, A DISTANCE OF 378.60 FEET; THENCE NORTH 00°17'33" WEST, A DISTANCE OF 284.63 FEET; TO THE POINT OF BEGINNING.

CONTAINING: 103,632 SQUARE FEET OR 2.38 ACRES OF LAND, MORE OR LESS.

Exhibit B
Special Development Requirements

Craft food and beverage producer

(a) Required to include one or more accessory uses such as a tasting room, tap room, restaurant, retail, demonstration area, education and training facility or other use incidental to the brewery and open and accessible to the public.
(b) Access and loading and unloading facilities are required to be internal to the site or development or located at the back (or side not adjacent to a single- family or duplex residential use or zoning district) of building.
(c) Required parking is calculated based on square footage proposed for each use (example: manufacturing parking ratio + retail parking ratio based on square-footage).
(d) All outdoor equipment and storage of materials, including silos, products for distribution, and other items requiring long-term storage shall be allowed in areas behind building, in enclosed buildings, or otherwise screened, using architectural features consistent with the principal structure, from the public right of way or a single-family or duplex residential use or residential zoning district. Spent or used grain or similar materials that can attract rodents shall be stored in sealed containers.
(e) Off-site distribution via semi-trailer (articulated combination vehicle with a permanent or semi-permanent pivoting joint; does not include a straight or box truck with no articulation) is only permitted if the truck traffic is limited to streets classified as arterial on the Comprehensive Plan Roadway Functional Classification Map.
(f) Outdoor seating is not permitted to be located on any side adjacent to a single-family or duplex residential use or residential zoning district.
(g) Shall comply with all applicable federal, state and local laws.

Microbrewery

(a) Required to include one or more accessory uses such as a tasting room, tap room, restaurant, retail, demonstration area, education and training facility or other use incidental to the microbrewery and open and accessible to the public.
(b) Decorative silos that are designed to be compatible and integral with the principal structure are permitted. No additional sign area is permitted for decorative silos; however, permitted wall sign area for the principal structure or building may be transferred to the silo, provided that silo signage is only situated on the sides of the silo visible from a right-of- way. The maximum height shall not exceed the maximum building height of the zoning district.
(c) Access and loading and unloading facilities are required to be internal to the site or development or located at the back (or side not adjacent to a single-family or duplex residential use or zoning district) building.
(d) Required parking is calculated based on square footage proposed for each use (example: manufacturing parking ratio + bar parking ratio based on square-footage).
(e) Storage of materials, including silos, products for distribution, and other items requiring long-term storage shall be allowed in areas behind building (or a side not adjacent to a residential use or zoning district), in enclosed buildings, or otherwise screened from the public right of way or a single-family or duplex residential use or residential zoning district- Spent or used grain shall be stored in sealed containers.
(f) Off-site distribution via semi-trailer (articulated combination vehicle with a permanent or semi-permanent pivoting joint; does not include a straight or box truck with no articulation) is only permitted if the truck traffic is limited to streets classified as arterial on the Comprehensive Plan Roadway Functional Classification Map.
(g) Outdoor seating is not permitted to be located on any side adjacent to a single-family or duplex

residential use or residential zoning district.

(h) Shall comply with all applicable federal, state and local laws.

Mini warehouses

(a) Warehouse buildings shall be screened from any public rights-of-way by a six-foot high opaque fence or wall with a type 2 bufferyard planted along the street side of the fence or wall. Bufferyard requirements may be increased in accordance with chapter 13 of the Land Development Code.

(b) All storage unit doors shall face interior to the development.

(c) The proposed site shall front on or have driveway access to an arterial roadway.

Motor Vehicle and Boat Storage

(a) The proposed site shall front on or have driveway access to an arterial roadway.

(b) Buffering shall be provided based on a land use intensity factor of six for completely enclosed facilities and seven for fenced facilities.

(c) Outside storage shall be completely enclosed within a six- to eight-foot-high opaque fence or wall.

(d) Vehicles shall include automobiles, trucks, vans, boats, boat trailers, recreational vehicles, and other similar vehicles which are customarily owned, rented or leased by the average family. Such vehicles shall be licensed and fully operational at all times. Towing to and impoundment at the facility of any inoperable vehicle or appurtenance thereof shall not be permitted.

(e) Vehicle washing shall be confined to a commercial facility or pervious surface in compliance with the water conservation regulations of the city.

(f) Vehicle servicing shall be limited to regular maintenance items such as changing oil, tires, batteries, and other similar activities. Mechanical or body repair, painting, engine rebuilding, or other similar work which would customarily be performed at a motor vehicle service center shall not be permitted.

(g) Living quarters for a resident manager may be permitted, provided such quarters are occupied by the manager.

(h) Required parking shall be provided at a ratio of one space for each ten storage stalls or fraction thereof, plus one space for each employee at the largest shift and two spaces if resident manager living quarters are provided.

Business Impact Estimate

This form should be included in agenda packet for the item under which the proposed ordinance is to be considered, and must be posted on the City's website by the time notice of the proposed ordinance is published.

Proposed ordinance's title/reference:
Ordinance No. 2025-11 – 1st Amendment to the Master Development Agreement for Summer Trees Plaza Planned Commercial Development (CASE NO. PRZA-25-0001)

This Business Impact Estimate is provided in accordance with Section 166.041(4), Florida Statutes. If one or more boxes are checked below, this means the City is of the view that a business impact estimate is **not** required by state law[1] for the proposed ordinance, but the City is implementing the procedure required by statutory law to ensure that no inadvertent procedural issue could impact the enactment of the proposed ordinance. This Business Impact Estimate may be revised following its initial posting.

☐ The proposed ordinance is required for compliance with Federal or State law or regulation;
☐ The proposed ordinance relates to the issuance or refinancing of debt;
☐ The proposed ordinance relates to the adoption of budgets or budget amendments, including revenue sources necessary to fund the budget;
☐ The proposed ordinance is required to implement a contract or an agreement, including, but not limited to, any Federal, State, local, or private grant, or other financial assistance accepted by the municipal government;
☐ The proposed ordinance is an emergency ordinance;
☐ The ordinance relates to procurement; or
☒ The proposed ordinance is enacted to implement the following:

a. Development orders, and development permits, as those terms are defined in s. 163.3164; and development agreements as authorized by the Florida Local Government Development Agreement Act under ss. 163.3220-163.3243;
b. Comprehensive plan amendments and land development regulation amendments initiated by an application by a private party other than the municipality;
c. Sections 190.005 and 190.046, *Florida Statutes*, regarding community development districts;
d. Section 553.73, *Florida Statutes*, relating to the *Florida Building Code*; or
e. Section 633.202, *Florida Statutes*, relating to the *Florida Fire Prevention Code*.

[1] See Section 166.041(4)(c), Florida Statutes.

In accordance with the provisions of controlling law, even notwithstanding the fact that, an exemption noted above may apply, the City hereby publishes the following information:

1. Summary of the proposed ordinance (must include statement of the public purpose, such as serving the public health, safety, morals, and welfare):

The property owner requests the proposed amendment to the Master Development Agreement (MDA) for the Summer Trees Plaza Planned Commercial Development (PCD) to allow a broader range of commercial uses in the PCD, consistent with the uses allowed in the City's conventional commercial zoning districts and update the signage and architectural requirements for the PCD to be consistent with the current requirements in the City's Land Development Code (LDC). The Summer Trees Plaza PCD is located on the south side of Taylor Road, between Summer Trees Road and Williamson Boulevard.

2. An estimate of the direct economic impact of the proposed ordinance on private, for-profit businesses in the City, if any:

(a) An estimate of direct compliance costs that businesses may reasonably incur:
N/A

(b) Any new charge or fee imposed by the proposed ordinance or for which businesses will be financially responsible:
N/A

(c) An estimate of the City's regulatory costs, including estimated revenues from any new charges or fees to cover such costs:
N/A

3. Good faith estimate of the number of businesses likely to be impacted by the proposed ordinance: N/A

4. Additional information the governing body deems useful[2] (if any): N/A

[2] *You may wish to include in this section the methodology or data used to prepare the Business Impact Estimate. For example: City staff solicited comments from businesses in the City as to the potential impact of the proposed ordinance by contacting the local Chamber of Commerce, social media posting, direct mail or direct email, posting on City website, public workshop, etc. You may also wish to include efforts made to reduce the potential fiscal impact on businesses. You may also wish to state here that the proposed ordinance is a generally applicable ordinance that applies to all persons similarly situated (individuals as well as businesses) and, therefore, the proposed ordinance does not affect only businesses*.

CITY COUNCIL AGENDA ITEM

COUNCIL MEETING DATE 3/18/2025

SUBJECT: (H20) Approval of the Shoppes at Summer Trees Plat (Case No. SUBD-24-0001)

DEPARTMENT: Community Development

GOAL: 3 - Quality of Life

RECOMMENDED MOTION: Move to approve the Shoppes at Summer Trees Plat.

SUMMARY: Planning Commission Action (1/23/25): Recommended Approval 7-0

The property owner, FL P52, LLC, requests approval of the Summer Trees Subdivision Plat. If approved, the property owner intends to subdivide a ±5.83-acre property into two (2) commercial lots. The proposed subdivision plat will create a ±2.78-acre lot (Lot 1) for a multi-tenant commercial building and a ±3.05-acre lot (Lot 2) for an Aldi grocery store, both of which are currently under construction. The subject property is located at the southwest corner of South Williamson Boulevard and North Summer Trees Road. The subject property is currently zoned for commercial use and is part of the Planned Community Agriculture (PC-A) - Workplace Zoning District.

Location Map of the Summer Trees Subdivision

The subdivision plat to subdivide the subject property has been reviewed by the Staff Development Review Committee (SDRC) and determined to be designed according to the lot dimensional requirements of the PC-A zoning district and the technical criteria in the Land Development Code (LDC) for subdivision of land. The required subdivision infrastructure (water, sewer, drainage, access drives, sidewalks, and driveways) to serve the two (2) commercial lots will be constructed as part of the Shoppes at Summer Trees site plan.

In February 2024, a site plan was approved by the SDRC for constructing a multi-tenant building and an Aldi grocery store, along with on-site and off-site improvements. The required infrastructure and easements to serve the two (2) proposed commercial lots will be constructed or provided as part of the site plan for the Shoppes at Summer Trees site plan. Therefore, subdivision infrastructure plans are not required as part of the plat. All required subdivision infrastructure improvements and easements will be built and accepted as part of the Shoppes at Summer Trees site plan before the subdivision plat is recorded.

A review of a subdivision plat is a ministerial review in that the approving body must

only consider the technical criteria and lot dimensional requirements in the LDC. The plat will be approved if the technical requirements are met.

The Staff Report is attached for more information.

PRESENTER: Tim Burman

ATTACHMENTS:

1.	STAFF REPORT	STAFF REPORT .pdf
2.	Exhibit 1 - Shoppes at Summer Trees Plat	Exhibit 1 - Shoppes at Summer Trees Plat .pdf

Penelope Cruz	Created/Initiated - 2/21/2025
Tim Burman	Approved - 2/26/2025
Shannon Balmer	Approved - 2/28/2025
Wayne Clark	Final Approval - 3/7/2025

STAFF REPORT
SUBDIVISION PLAT / SHOPPES AT SUMMER TREES PLAT
CASE NO. SUBD-24-0001

REQUEST:	To subdivide ±5.83 acres into two commercial lots.
LOCATION:	5500 S. Williamson Boulevard (Figure 1)
OWNER:	FL P52, LLC
APPLICANT:	Jessica Gow, Esq., Cobb Cole
STAFF RECOMMENDATION:	Approval
STAFF CONTACT:	Penelope Cruz, Planning Manager (386) 506-5671
PLANNING COMMISSION:	Recommended Approval 7-0 (January 23, 2025)
CITY COUNCIL:	March 18, 2025

DISCUSSION

The applicant is requesting to subdivide ±5.83 acres located at the southwest corner of South Williamson Boulevard and North Summer Trees Road (Figure 1) into two (2) commercial lots. The subject property is zoned Planned Community Agriculture (PC-A) Workplace District, and the subdivision plat (Exhibit A) has been designed according to the lot dimensional requirements of the PC-A zoning district and the technical criteria in the Land Development Code (LDC) for subdivision of land. The review of a subdivision plat is a ministerial review, in that the approving body must only consider the technical criteria and lot dimensional requirements in the LDC. The proposed subdivision plat will create a ±2.78-acre lot (Lot 1) for a multi-tenant commercial building, and a ±3.05-acre lot (Lot 2) for an Aldi grocery store, both of which are currently under construction.

Figure 1. Location Map

The subject property is currently zoned Planned Community Agriculture (PC-A) Workplace District. According to the LDC, this zoning district allows uses such as banks, bars, business services, convenience stores with or without fuel operations, financial services, fleet-based services, game/recreation facilities, health/exercise clubs, hotels, medical offices, motor vehicle and boat sales, motor vehicle service stations, offices, personal services, restaurants, retail sales and services, and veterinary clinics.

In February 2024, a site plan was approved to construct a ±12,000 square-foot multi-tenant commercial building and a ±19,432 square-foot Aldi grocery store, along with on-site and off-site improvements (Case No. SPIN-23-0009). If the plat is approved, the multi-tenant commercial building will be located on Lot 1, and the Aldi grocery store will be located on Lot 2.

The subdivision plat to subdivide the subject property has been reviewed by the Staff Development Review Committee (SDRC) and determined to be designed according to the requirements and dimensional standards of the City's LDC. The required subdivision infrastructure (stormwater, driveway access, water and sewer, open space, etc.) to serve the two (2) proposed lots is being constructed as part of the Shoppes at Summer Trees site plan and will include (See Figure 2):

- Utility infrastructure to serve Lot 1 and Lot 2;
- Construction of improvements to the North Summer Trees Road and Williamson Boulevard intersection to add a second left-turn lane for eastbound North Summer Trees Road to improve traffic flow, reduce delays for turning vehicles, and improve intersection safety;
- Full-access driveway on Summer Trees Road;
- Right-in/right-out/left-in driveway on Williamson Boulevard;
- Stormwater infrastructure to provide retention for Lot 1 and Lot 2;
- Installation of a 36-inch pipe in the existing ditch at the rear of the property to allow for better maintenance;
- Required access, drainage, and utility easements over the shared subdivision infrastructure that serves Lot 1 and Lot 2;
- Cross-access driveways and easements between lots for vehicles and pedestrians;
- Five-foot-wide sidewalk along the North Summer Trees Road;
- Eight-foot-wide sidewalk along Williamson Boulevard; and
- Required tree preservation areas for Lot 1 and Lot 2.

Figure 2. Subdivision Improvements being Constructed with Site Construction

With the required subdivision infrastructure to serve the two (2) proposed lots being constructed as part of the site plan improvements, subdivision infrastructure plans are not required as part of the subdivision plat. All required subdivision infrastructure improvements will be built and accepted as part of the Shoppes at Summer Trees site plan, which may occur prior to the subdivision plat being recorded.

CONCURRENCY REVIEW

Public facilities and services are currently available to serve the proposed two (2) commercial lots. During the site plan review, concurrency reviews for transportation, water, sewer, and stormwater drainage were completed.

As part of the site plan approval process, the developer entered into a Proportionate Fair-Share Agreement with the City of Port Orange and Volusia County in 2023 to address Transportation Concurrency. The transportation mitigation payment in the 2023 agreement included: 1) payment of $595,738.78 to Volusia County for impacts to Williamson Boulevard and Taylor Road and 2) construction of a second left-turn lane for eastbound North Summer Trees Road onto northbound Williamson Boulevard to improve traffic flow, reduce delays for turning vehicles, and improve intersection safety.

The stormwater drainage system for this development has been designed to comply with the stormwater requirements in the City's Land Development Code, and holds about 9.5 inches of rain over 24 hours. In addition to complying with the stormwater requirements in the LDC, the St. Johns River Water Management District (SJRWMD) reviewed and approved the stormwater drainage system for this project and SJRWMD issued an Environmental Resource Permit (ERP) [Permit #181953-2] approving the stormwater drainage system.

The stormwater system for this development consists of four interconnected ponds (three dry retention ponds and one wet detention pond) located along the perimeter of the site. Stormwater from the site will initially drain to the dry retention ponds before discharging into the wet retention pond. Once the stormwater in the wet retention pond reaches its permitted height, stormwater will discharge into the city-maintained drainage pipe in the North Summer Trees Road right-of-way and flow south to the county-maintained drainage swale in the Taylor Road right-of-way, then will go under Taylor Road through a pipe (in front of Windsor Hills subdivision), eventually discharging into the ditch that runs through the Summer Trees South subdivision out to Spruce Creek. Once the site is developed, the volume and flow rate of discharged stormwater from the on-site wet detention pond into the public conveyance system will not exceed the discharge volume and flow rate from when the site was undeveloped, under the 100-year storm standard in the LDC.

Figure 3. Drainage Flow from Subdivision to Spruce Creek

CONSISTENCY WITH COMPREHENSIVE PLAN

The proposed commercial subdivision is generally consistent with the Goals, Objectives, and Polices of the Comprehensive Plan and the *Planned Community-Westside* Future Land Use designation of the subject property. The City's Comprehensive Plan states that the *Planned Community-Westside* Future Land Use designation is generally characterized by various uses, such as residential, commercial, industrial, and institutional. The subject property is also located in a Regional Commercial node as designated in the City's Comprehensive Plan. A Regional Commercial node is generally designed to serve the residents of Port Orange, along with residents from adjacent cities and unincorporated Volusia County, with a mix of general and specialized products and services. The proposed subdivision provides the necessary infrastructure and buildable land to support the uses projected to be developed at this location.

RECOMMENDATION

A review of a subdivision plat is a ministerial review in that the approving body must consider the technical criteria of the Land Development Code (LDC). The plat will be approved if the technical requirements are met. Staff recommends approval of the Subdivision Plat for Shoppes at Summer Trees, subject to approval of variance case No. VARC-24-0004, as all technical requirements in the LDC are met.

ATTACHMENT

Exhibit 1 – Shoppes at Summer Trees Plat

EXHIBIT 1

1/2" MARGIN

SHOPPES AT SUMMER TREES

A PORTION OF SECTION 18, TOWNSHIP 16 SOUTH, RANGE 33 EAST, LOCATED IN THE CITY OF PORT ORANGE, VOLUSIA COUNTY, FLORIDA

LEGAL DESCRIPTION:

A PORTION OF SECTION 18, TOWNSHIP 16 SOUTH, RANGE 33 EAST, VOLUSIA COUNTY, FLORIDA, BEING MORE PARTICULARLY DESCRIBED AS FOLLOWS:

COMMENCE AT THE NORTH 1/4 CORNER OF SECTION 19, TOWNSHIP 16 SOUTH, RANGE 33 EAST, SAID POINT ALSO BEING THE POINT OF BEGINNING, THENCE RUN N87°39'02"W, A DISTANCE OF 251.85 FEET, ALONG THE NORTH LINE OF SAID SECTION 19, SAID NORTH LINE ALSO BEING THE NORTH LINE OF LOT 1, WESTPORT SQUARE P.C.D., PHASE II A REPLAT AS RECORDED IN MAP BOOK 55, PAGES 49 THROUGH 52, OF THE PUBLIC RECORDS OF VOLUSIA COUNTY, FLORIDA, TO A POINT LYING ON THE EASTERLY RIGHT-OF-WAY LINE OF SUMMER TREES ROAD, A 100.00 FOOT WIDE RIGHT-OF-WAY; THENCE RUN N00°46'27"W ALONG THE EASTERLY RIGHT-OF-WAY LINE OF SAID SUMMER TREES ROAD, 4.95 FEET TO THE BEGINNING OF A NON TANGENT CURVE CONCAVE EASTERLY HAVING A RADIUS OF 500.00 FEET, A CENTRAL ANGLE OF 35°33'19" AND A CHORD BEARING N17°17'38"E; THENCE NORTHERLY ALONG SAID EASTERLY RIGHT-OF-WAY LINE AND ALONG THE ARC OF SAID CURVE, 310.28 FEET; THENCE N35°04'18"E ALONG SAID EASTERLY RIGHT-OF-WAY LINE, 253.94 FEET TO THE SOUTH RIGHT-OF-WAY LINE OF WILLIAMSON BOULEVARD, A 200.00 FOOT WIDE RIGHT-OF-WAY; THENCE RUN S54°50'58"E ALONG THE SOUTH RIGHT-OF-WAY LINE OF SAID WILLIAMSON BOULEVARD, 263.67 FEET TO THE BEGINNING OF A CURVE CONCAVE SOUTHWESTERLY HAVING A RADIUS OF 2765.00 FEET, A CENTRAL ANGLE OF 11°30'20" AND A CHORD BEARING S49°05'47"E; THENCE SOUTHEASTERLY ALONG SAID SOUTH RIGHT-OF-WAY LINE, 555.25 FEET TO THE NORTH LINE OF WESTPORT SQUARE P.C.D., PHASE I, ACCORDING TO THE MAP OR PLAT THEREOF, AS RECORDED IN MAP BOOK 45, PAGES 9 AND 10 OF THE PUBLIC RECORDS OF VOLUSIA COUNTY, FLORIDA; THENCE RUN N89°59'16"W ALONG THE NORTH LINES OF SAID WESTPORT SQUARE P.C.D., PHASE I AND WESTPORT SQUARE P.C.D., PHASE II A REPLAT, 619.51 FEET TO THE POINT OF BEGINNING.

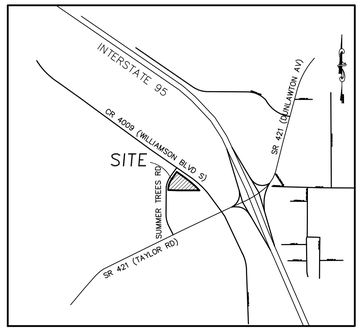

VICINITY MAP
1"=2000'

INDEX / KEY MAP (not to scale)

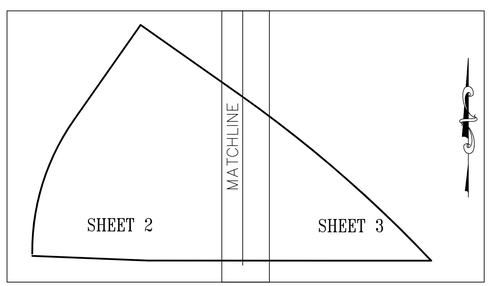

GRAPHIC SCALE
0 40 80 120
(IN FEET)
1 inch = 40 ft

ABBREVIATIONS	
Δ	DELTA OR CENTRAL ANGLE
R	RADIUS
L	ARC LENGTH
CB	CHORD BEARING
C	CHORD LENGTH
LB	LICENSED BUSINESS
LS	LAND SURVEYOR
R/W	RIGHT OF WAY
ORB	OFFICIAL RECORDS BOOK
PG	PAGE
C.A.	COMMON AREA
NVACE	NON-VEHICULAR ACCESS CONTROL EASEMENT
U.E.	UTILITY EASEMENT
D.E.	DRAINAGE EASEMENT
PB	PLAT BOOK
MB	MAP BOOK
TCE	TREE CONSERVATION EASEMENT

GENERAL NOTES

1. MONUMENTATION
   □ – DENOTES PERMANENT REFERENCE MONUMENT FOUND STAMPED AS NOTED.
   ■ – DENOTES PERMANENT REFERENCE MONUMENT SET 4X4 CONCRETE MONUMENT STAMPED PRM LB 3019

2. (R) – DENOTES A LINE RADIAL RELATIVE TO ADJACENT CURVE.
   (NR) – DENOTES A LINE NOT RADIAL RELATIVE TO ADJACENT CURVE.

3. DIMENSIONS SHOWN ARE IN FEET AND DECIMALS THEREOF.

4. ACCURACY
THE BOUNDARY LINEAR ERROR OF CLOSURE DOES NOT EXCEED 1:10,000.
THE BOUNDARY ANGULAR ERROR OF CLOSURE DOES NOT EXCEED 15 SECONDS MULTIPLIED BY THE SQUARE ROOT OF THE NUMBER OF ANGLES TURNED.

5. BEARING STRUCTURE BASED ON NAD 83 FLORIDA STATE PLANE COORDINATE SYSTEM, EAST ZONE, ALONG THE SOUTHERLY LINE OF THE SOUTHWEST 1/4 OF SECTION 18, TOWNSHIP 16 SOUTH, RANGE 33 EAST BEING N87°39'02"W.

6. NOTE: ALL MEASUREMENTS REFER TO HORIZONTAL PLANE IN ACCORDANCE WITH THE DEFINITION OF THE U.S. SURVEY FOOT OR METER ADOPTED BY THE NATIONAL INSTITUTE OF STANDARDS AND TECHNOLOGY. ALL MEASUREMENTS SHALL USE THE 39.37/12=3.28083333333 EQUATION FOR CONVERSION FROM A U.S. FOOT TO METERS.

7. NOTICE: THIS PLAT, AS RECORDED IN ITS GRAPHIC FORM, IS THE OFFICIAL DEPICTION OF THE SUBDIVIDED LANDS DESCRIBED HEREIN AND WILL IN NO CIRCUMSTANCES BE SUPPLANTED IN AUTHORITY BY ANY OTHER GRAPHIC OR DIGITAL FORM OF THE PLAT. THERE MAY BE ADDITIONAL RESTRICTIONS THAT ARE NOT RECORDED ON THIS PLAT THAT MAY BE FOUND IN THE PUBLIC RECORDS OF THIS COUNTY.

8. THIS PLAT IS SUBJECT TO ALL EASEMENTS OF RECORD AND RESERVATIONS OF EASEMENTS, INCLUDING BUT NOT LIMITED TO DRAINAGE, UTILITY, AND ACCESS EASEMENTS GRANTED HEREON WHICH SHALL BE LOCATED AS FOLLOWS EXCEPT AS OTHERWISE NOTED ON THE PLAT:

ENTIRE STREET FRONTAGES OF LOTS AND COMMON AREAS: 12.00 FEET WIDE

9. UTILITIES INCLUDE BUT ARE NOT LIMITED TO SANITARY SEWER, POTABLE WATER, RECLAIMED WATER, STORM DRAINAGE, ELECTRIC, TELEPHONE, CABLE TELEVISION, SECURITY, NATURAL GAS, FIBER OPTIC, TELECOMMUNICATION.

10. ALL PLATTED UTILITY EASEMENTS SHALL PROVIDE THAT SUCH EASEMENTS SHALL ALSO BE EASEMENTS FOR THE CONSTRUCTION, INSTALLATION, MAINTENANCE, AND OPERATION OF CABLE TELEVISION SERVICES; PROVIDED, HOWEVER, NO SUCH CONSTRUCTION, INSTALLATION, MAINTENANCE, AND OPERATION OF CABLE TELEVISION SERVICES SHALL INTERFERE WITH THE FACILITIES AND SERVICES OF AN ELECTRIC, TELEPHONE, GAS, OR OTHER PUBLIC UTILITY. IN THE EVENT A CABLE COMPANY DAMAGES THE FACILITIES OF A PUBLIC UTILITY, IT SHALL BE SOLELY RESPONSIBLE FOR THE DAMAGES. THIS SECTION SHALL NOT APPLY TO THOSE PRIVATE EASEMENTS GRANTED TO OR OBTAINED BY A PARTICULAR ELECTRIC, TELEPHONE, GAS, OR OTHER PUBLIC UTILITY. SUCH CONSTRUCTION, INSTALLATION, MAINTENANCE, AND OPERATION SHALL COMPLY WITH THE NATIONAL SAFETY CODE AS ADOPTED BY THE FLORIDA PUBLIC SERVICE COMMISSION.

11. ALL OTHER EASEMENTS ARE SUBORDINATE TO ANY CONSERVATION EASEMENTS DEDICATED HEREON. THERE SHALL BE NO REMOVAL OR DISTURBANCE OF ANY VEGETATION WITHIN SUCH CONSERVATION EASEMENTS. ANY PROPOSED CONSTRUCTION OR OTHER USE WITHIN A CONSERVATION EASEMENT MUST BE REVIEWED AND APPROVED BY THE CITY OF PORT ORANGE AND ANY OTHER AUTHORITY HAVING JURISDICTION OVER THE CONSERVATION EASEMENT.

12. THE TREE CONSERVATION EASEMENT AS DEFINED ON THIS PLAT IS INTENDED TO MEET THE TREE PRESERVATION REQUIREMENTS FOR LOTS 1 AND 2, AND IS FOR THE EXPRESS PURPOSE OF THE PRESERVATION AND LONGEVITY OF THE TREES THEREIN. ACTIONS DETRIMENTAL TO TREE HEALTH SURVIVAL WITHIN THE BOUNDARIES OF THE DRIPLINE ARE PROHIBITED WITHOUT THE EXPRES PERMISSION OF THE CITY OF PORT ORANGE AND ANY OTHER AUTHORITY HAVING JURISDICTION OVER THE CONSERVATION EASEMENT. NOTHING HEREIN SHALL, HOWEVER, BE CONSTRUCTED TO PREVENT NATURAL VEGETATION WITHIN THE EASEMENT AREA FROM BEING CLEARED BY HAND TO PROVIDE A NEAT, MANICURED APPEARANCE. IN ADDITION, NOTHING HEREIN SHALL BE CONSTRUED TO PREVENT THE PLACEMENT OF SOD, IRRIGATION AND LANDSCAPE PLANTS OR TO PREVENT NORMAL LAWN MAINTENANCE SUCH AS MOWING, EDGING AND WEEDING NOT HARMFUL TO THE OBJECTIVE OF TREE PRESERVATION WITHIN THE EASEMENT AREA. ANY PROPOSED CONSTRUCTION OR OTHER USE WITHIN A CONSERVATION EASEMENT MUST BE REVIEWED AND APPROVED BY THE CITY OF PORT ORANGE AND ANY OTHER AUTHORITY HAVING JURISDICTION OVER THE CONSERVATION EASEMENT.

13. THE OWNER OF LOT 1, SHALL BE RESPONSIBLE FOR THE OPERATION AND MAINTENANCE OF THE DRAINAGE AND STORMWATER SYSTEM SERVING THE AREA WITHIN THE BOUNDARIES OF THIS PLAT, PURSUANT TO THE STORMWATER MANAGEMENT PLAN APPROVED FOR DEVELOPMENT BY THE CITY OF PORT ORANGE, FLORIDA. SHOULD THE OWNER OF LOT 1 FAIL TO PERFORM MAINTENANCE REPAIRS, AND REPLACEMENT OF THE DRAINAGE AND STORMWATER SYSTEM, THE CITY OF PORT ORANGE SHALL BE ENTITLED TO ENTER UPON THE COMMON AREAS AND DESIGNATED EASEMENT AREAS TO PERFORM NECESSARY MAINTENANCE, REPAIRS, AND REPLACEMENTS OF THE DRAINAGE AND STORMWATER SYSTEM. THE CITY'S RIGHTS AS SET FORTH HEREIN DOES NOT IMPOSE ANY OBLIGATION, BURDEN, RESPONSIBILITY OR LIABILITY UPON THE CITY TO ENTER UPON THE SUBJECT PROPERTY AND TAKE ANY ACTION TO MAINTAIN, REPAIR, OR REPLACE THE PRIVATE DRAINAGE & STORM-WATER SYSTEM. FURTHERMORE, THE CITY SHALL HAVE THE RIGHT TO LIEN ALL OWNERS OF RECORD IN PROPERTY FOR THE COST OF ANY NECESSARY MAINTENANCE AND REPAIRS MADE IN FURTHERANCE OF PROTECTING PUBLIC HEALTH, SAFETY, AND GENERAL WELFARE. IN THE EVENT OF TERMINATION OR DISSOLUTION OR FINAL LIQUIDATION OF THE OWNER OF LOT 1, THE RESPONSIBILITY FOR THE OPERATION AND MAINTENANCE OF THE DRAINAGE AND STORMWATER MANAGEMENT SYSTEM WILL BE TRANSFERRED TO AND ACCEPTED BY AN ENTITY APPROVED BY THE SAINT JOHNS RIVER WATER MANAGEMENT DISTRICT PRIOR TO SUCH TERMINATION, DISSOLUTION, OR LIQUIDATION.

14. THE OWNER OF LOT 1 SHALL BE THE ENTITY RESPONSIBLE FOR THE OPERATION AND MAINTENANCE OF THE PRIVATELY OWNED SANITARY SEWER SYSTEM AND WATER LINE SYSTEM SERVING THE AREA WITHIN THE BOUNDARIES OF THIS PLAT. THE OWNER OF LOT 1 MAY ENTER INTO SEPARATE AGREEMENTS REGARDING THE MAINTENANCE OF SUCH UTILITIES WITH THE LOT OWNERS WITHIN THE PLAT.

15. THE LANDS SHOWN HEREON ARE SUBJECT TO THE CROSS ACCESS AND UTILITY EASEMENTS AND MAINTENANCE OBLIGATIONS SET FORTH IN THE DECLARATION OF RECIPROCAL EASEMENT AGREEMENT WITH COVENANTS, CONDITIONS, AND RESTRICTIONS RECORDED IN OFFICIAL RECORDS BOOK _____ PAGE _____, PUBLIC RECORDS, VOLUSIA COUNTY, FLORIDA.

16. THE OWNER OF LOT 1 HEREBY DECLARES A PERPETUAL NON-EXCLUSIVE EASEMENT IN FAVOR OF THE OWNER OF LOT 2 FOR DRAINAGE PURPOSES, INCLUDING THE CONTINUED COLLECTION, RETENTION, AND TRANSPORTATION OF STORMWATER.

PREPARED BY:
SLIGER & ASSOCIATES, INC.
PROFESSIONAL LAND SURVEYORS
3921 NOVA ROAD
PORT ORANGE, FL. 32127
(386) 761-5385
LICENSED BUSINESS CERTIFICATION NO. 3019

MAP BOOK: _____ PAGE: _____

DEDICATION:

KNOW ALL MEN BY THESE PRESENTS THAT FL P52 LLC, A FLORIDA LIMITED LIABILITY COMPANY IS THE OWNER IN FEE SIMPLE OF THE LANDS SHOWN AND DESCRIBED HEREON AS THE PLAT ENTITLED 'SHOPPES AT SUMMER TREES', LOCATED IN THE CITY OF PORT ORANGE, VOLUSIA COUNTY, FLORIDA, HEREBY DEDICATES THE SAID LANDS AND PLAT FOR THE USES AND PURPOSES HEREIN EXPRESSED, ALL TREE CONSERVATION, NON-VEHICULAR ACCESS CONTROL, DRAINAGE, DRAINAGE AND UTILITY, AND ACCESS EASEMENTS SHOWN OR DESCRIBED ON THE PLAT ARE, UNLESS OTHERWISE INDICATED, GRANTED TO THE CITY OF PORT ORANGE FOR PURPOSES STATED IN GENERAL NOTES. THE CITY OF PORT ORANGE IS HEREBY GRANTED AN EASEMENT FOR ACCESS OVER ALL DRIVES AISLES AND PARKING AREAS FOR THE PURPOSE OF EMERGENCY AND GOVERNMENTAL SERVICES. GRANTOR HEREBY DECLARES A PERPETUAL RECIPROCAL NON-EXCLUSIVE EASEMENT FOR VEHICULAR AND PEDESTRIAN ACCESS, INGRESS AND EGRESS OVER AND UPON ALL DRIVE AISLES AND RIGHTS OF WAY NOW OR HEREAFTER LOCATED WITHIN THE SUBDIVISION FOR THE USE AND BENEFIT OF ALL PRESENT AND FUTURE PROPERTY OWNERS WITHIN THE SUBDIVISION AND THEIR RESPECTIVE SUCCESSORS, ASSIGNS, AGENTS, EMPLOYEES, GUESTS, TENANTS, AND INVITEES. THE LIFT STATION TRACT IS HEREBY DEDICATED TO THE CITY OF PORT ORANGE IN FEE SIMPLE. THE ACCESS EASEMENT SHOWN ON LOT 1 IS HEREBY GRANTED TO CITY OF PORT ORANGE FOR PUPROSE OF ACCESS TO THE LIFT STATION. ALL DRAINAGE AND DRAINAGE AND UTILITY EASEMENTS SHOWN OR DESCRIBED ON THIS PLAT ARE ALSO, UNLESS OTHERWISE INDICATED, GRANTED TO THE OWNERS OF LOT 1 FOR PURPOSES SET FORTH IN THE PLAT NOTES.

IN WITNESS WHERE OF, FL P52 LLC, a Florida limited liability company HAS CAUSED THESE PRESENTS TO BE SIGNED, ATTESTED AND SEALED BY THOSE NAMED BELOW ON THIS _____ DAY OF _____, 20___.

SIGNED AND SEALED IN THE PRESENCE OF:

_____

PRINTED NAME: _____

_____

PRINTED NAME: _____

FL P52 LLC
a Florida limited liability company

BY: _____

PRINTED NAME: _____

TITLE:

STATE OF: FLORIDA

COUNTY OF: VOLUSIA
THIS IS TO CERTIFY THAT THE ABOVE SIGNED BEFORE ME BY MEANS OF [ ] PHYSICAL PRESENCE OR [ ] ON LINE NOTARIZATION THIS ___ DAY OF _____, 20___, _____ AS _____ OF _____ AS HE/SHE IS PERSONALLY KNOWN TO ME.

NOTARY PUBLIC SEAL
STATE OF FLORIDA AT LARGE
TITLE/RANK: _____
MY COMMISSION EXPIRES: _____
COMMISSION NUMBER: _____

_____
SIGNATURE

_____
PRINT NAME

CERTIFICATE OF SURVEYOR AND MAPPER

KNOW ALL MEN BY THESE PRESENTS, that the undersigned, being a licensed and registered Surveyor and Mapper, does hereby certify that the plat shown and described hereon, entitled SHOPPES AT SUMMER TREES was prepared under my direction and supervision, that the plat complies with all of the survey requirements of Chapter 177, Florida Statutes, and that all monumentation shown hereon or required per Chapter 177, Florida Statutes, has been properly placed.

(signature)_____ DATE: _____ (SEAL)
J.E. ZAPERT, P.S.M. No.: 4046
COMPANY NAME: SLIGER & ASSOCIATES, INC. CERTIFICATE OF AUTHORIZATION NO.: 3019
ADDRESS: 3921 NOVA ROAD, PORT ORANGE, FLORIDA 32127

REVIEW BY SURVEYOR AND MAPPER FOR THE CITY

I hereby certify to the City, that I have reviewed the foregoing plat for compliance with the requirements of Chapter 177, Florida Statutes, and that I have provided both the City and the Surveyor and Mapper of Record a list of deviations, if any, from such requirements.

(signature)_____ DATE: _____
(print name)_____, P.L.S. No.: _____

PLANNING COMMISSION CERTIFICATE OF APPROVAL

This statement hereby certifies that the plat entitled _____ was approved by the Port Orange Planning Commission on _____.

BY: _____
Chairman of the Port Orange Planning Commission

CITY COUNCIL CERTIFICATE OF APPROVAL

This statement hereby certifies that the plat entitled _____ was approved by the Port Orange City Council on _____.

BY: _____ ATTEST: _____
Mayor of the City of Port Orange City Clerk of the City of Port Orange

CERTIFICATE OF CLERK

I hereby certify that I have examined the foregoing plat and found that it complies, in form, with all requirements stated in Chapter 177, Florida Statutes, and that it was filed for record on _____ at _____ a.m. / p.m.

_____ File No. _____
Clerk of Circuit Court
Volusia County, Florida

SHEET 1 OF 3

1/2" MARGIN

MAX. SHEET SIZE 22"X28"

3" MARGIN

1/2" MARGIN

SHOPPES AT SUMMER TREES

A PORTION OF SECTION 18, TOWNSHIP 16 SOUTH, RANGE 33 EAST, LOCATED IN THE CITY OF PORT ORANGE, VOLUSIA COUNTY, FLORIDA

MAP BOOK:__ PAGE:__

GRAPHIC SCALE
0 40 80 120
(IN FEET)
1 inch = 40 ft

CURVE	DELTA ANGLE	RADIUS	ARC LENGTH	CHORD BEARING
C1	36°58'22"	5.00'	3.23'	N13°18'43"W
C2	35°00'32"	5.00'	3.06'	S40°33'44"E
C3	90°00'00"	5.00'	7.85'	N13°04'01"W
C4	121°34'50"	7.50'	15.91'	N28°51'28"W
C5	90°00'00"	5.00'	7.85'	N44°38'50"W
C6	20°10'55"	5.00'	1.76'	S80°15'42"W
C7	49°36'59"	5.00'	4.33'	N64°52'48"W
C8	89°57'32"	5.00'	7.85'	S45°19'56"W
C9	129°44'53"	5.00'	11.32'	S65°13'50"W
C10	90°33'41"	4.00'	6.32'	N45°04'19"E
C11	65°13'35"	5.00'	5.72'	N32°34'15"E
C12	90°00'00"	5.00'	7.85'	S44°38'37"E
C13	0°55'04"	488.00'	7.82'	S08°42'22"W
C14	0°29'00"	500.00'	4.22'	N22°36'42"E
C15	3°46'55"	500.00'	33.00'	N24°44'39"E
C16	0°31'35"	500.00'	4.59'	N26°53'54"E
C17	26°16'58"	35.00'	16.06'	N76°30'22"W
C18	22°30'03"	65.00'	25.53'	S78°23'50"E
C19	89°38'51"	10.00'	15.65'	S44°49'25"E

LINE	BEARING	DISTANCE
L1	N58°04'01"W	3.07'
L2	S31°55'59"W	8.79'
L3	S89°38'51"E	13.53'
L4	N00°21'10"E	10.52'
L5	S42°31'07"W	8.81'
L6	N00°21'21"E	6.16'
L7	N65°20'59"E	3.38'
L8	S39°04'49"W	2.00'
L9	S39°54'19"W	2.00'
L10	N67°37'48"W	2.00'
L11	N62°50'18"W	2.00'
L12	S64°55'58"E	3.18'
L13	S44°30'17"E	4.74'
L14	S89°35'09"E	4.91'
L15	N00°24'51"E	7.50'
L16	N89°35'09"W	1.80'
L17	N44°30'17"W	2.98'
L18	N64°55'58"W	6.73'
L19	S63°21'53"E	17.92'
L20	S67°08'48"E	17.12'
L21	S89°38'51"E	34.93'
L22	N89°38'51"W	5.43'

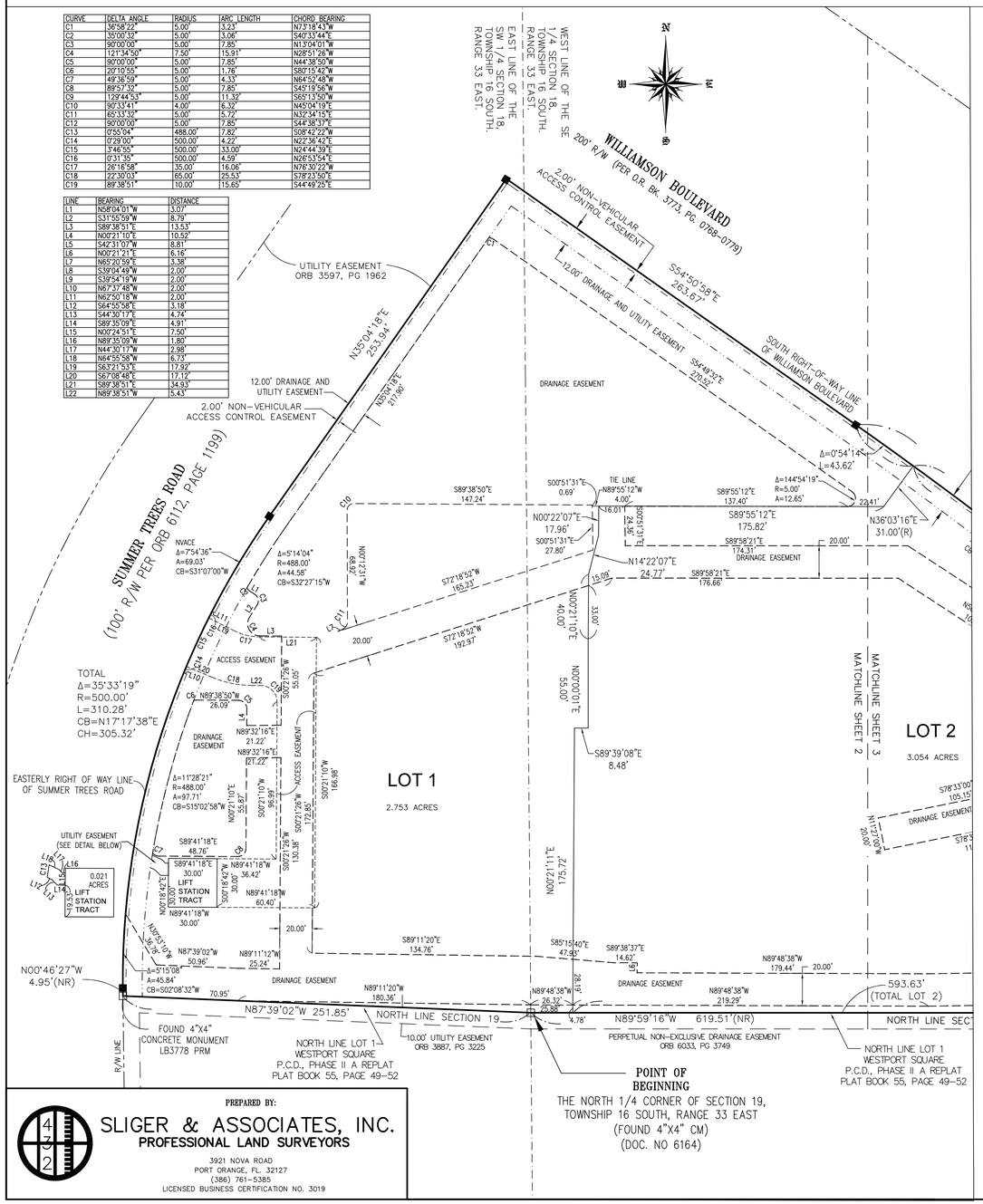

GENERAL NOTES

1. MONUMENTATION
   □ – DENOTES PERMANENT REFERENCE MONUMENT FOUND STAMPED AS NOTED.
   ■ – DENOTES PERMANENT REFERENCE MONUMENT SET 4X4 CONCRETE MONUMENT STAMPED PRM LB 3019

2. (R) – DENOTES A LINE RADIAL RELATIVE TO ADJACENT CURVE.
   (NR) – DENOTES A LINE NOT RADIAL RELATIVE TO ADJACENT CURVE.

3. DIMENSIONS SHOWN ARE IN FEET AND DECIMALS THEREOF.

4. ACCURACY
THE BOUNDARY LINEAR ERROR OF CLOSURE DOES NOT EXCEED 1:10,000. THE BOUNDARY ANGULAR ERROR OF CLOSURE DOES NOT EXCEED 15 SECONDS MULTIPLIED BY THE SQUARE ROOT OF THE NUMBER OF ANGLES TURNED.

5. BEARING STRUCTURE BASED ON NAD 83 FLORIDA STATE PLANE COORDINATE SYSTEM, EAST ZONE, ALONG THE SOUTHERLY LINE OF THE SOUTHWEST 1/4 OF SECTION 18, TOWNSHIP 16 SOUTH, RANGE 33 EAST BEING N87°39'02"W.

6. NOTE: ALL MEASUREMENTS REFER TO HORIZONTAL PLANE IN ACCORDANCE WITH THE DEFINITION OF THE U.S. SURVEY FOOT OR METER ADOPTED BY THE NATIONAL INSTITUTE OF STANDARDS AND TECHNOLOGY. ALL MEASUREMENTS SHALL USE THE 39.37/12=3.280833333333 EQUATION FOR CONVERSION FROM A U.S. FOOT TO METERS.

7. NOTICE: THIS PLAT, AS RECORDED IN ITS GRAPHIC FORM, IS THE OFFICIAL DEPICTION OF THE SUBDIVIDED LANDS DESCRIBED HEREIN AND WILL IN NO CIRCUMSTANCES BE SUPPLANTED IN AUTHORITY BY ANY OTHER GRAPHIC OR DIGITAL FORM OF THE PLAT. THERE MAY BE ADDITIONAL RESTRICTIONS THAT ARE NOT RECORDED ON THIS PLAT THAT MAY BE FOUND IN THE PUBLIC RECORDS OF THIS COUNTY.

8. THIS PLAT IS SUBJECT TO ALL EASEMENTS OF RECORD AND RESERVATIONS OF EASEMENTS, INCLUDING BUT NOT LIMITED TO DRAINAGE, UTILITY, AND ACCESS EASEMENTS GRANTED HEREON WHICH SHALL BE LOCATED AS FOLLOWS EXCEPT AS OTHERWISE NOTED ON THE PLAT:

ENTIRE STREET FRONTAGES OF LOTS AND COMMON AREAS: 12.00 FEET WIDE

9. UTILITIES INCLUDE BUT ARE NOT LIMITED TO SANITARY SEWER, POTABLE WATER, RECLAIMED WATER, STORM DRAINAGE, ELECTRIC, TELEPHONE, CABLE TELEVISION, SECURITY, NATURAL GAS, FIBER OPTIC, TELECOMMUNICATION.

10. ALL PLATTED UTILITY EASEMENTS SHALL PROVIDE THAT SUCH EASEMENTS SHALL ALSO BE EASEMENTS FOR THE CONSTRUCTION, INSTALLATION, MAINTENANCE, AND OPERATION OF CABLE TELEVISION SERVICES; PROVIDED, HOWEVER, NO SUCH CONSTRUCTION, INSTALLATION, MAINTENANCE, AND OPERATION OF CABLE TELEVISION SERVICES SHALL INTERFERE WITH THE FACILITIES AND SERVICES OF AN ELECTRIC, TELEPHONE, GAS, OR OTHER PUBLIC UTILITY. IN THE EVENT A CABLE COMPANY DAMAGES THE FACILITIES OF A PUBLIC UTILITY, IT SHALL BE SOLELY RESPONSIBLE FOR THE DAMAGES. THIS SECTION SHALL NOT APPLY TO THOSE PRIVATE EASEMENTS GRANTED TO OR OBTAINED BY A PARTICULAR ELECTRIC, TELEPHONE, GAS, OR OTHER PUBLIC UTILITY. SUCH CONSTRUCTION, INSTALLATION, MAINTENANCE, AND OPERATION SHALL COMPLY WITH THE NATIONAL SAFETY CODE AS ADOPTED BY THE FLORIDA PUBLIC SERVICE COMMISSION.

11. ALL OTHER EASEMENTS ARE SUBORDINATE TO ANY CONSERVATION EASEMENTS DEDICATED HEREON. THERE SHALL BE NO REMOVAL OR DISTURBANCE OF ANY VEGETATION WITHIN SUCH CONSERVATION EASEMENTS. ANY PROPOSED CONSTRUCTION OR OTHER USE WITHIN A CONSERVATION EASEMENT MUST BE REVIEWED AND APPROVED BY THE CITY OF PORT ORANGE AND ANY OTHER AUTHORITY HAVING JURISDICTION OVER THE CONSERVATION EASEMENT.

12. THE TREE CONSERVATION EASEMENT AS DEFINED ON THIS PLAT IS INTENDED TO MEET THE TREE PRESERVATION REQUIREMENTS FOR LOTS 1 AND 2, AND IS FOR THE EXPRESS PURPOSE OF THE PRESERVATION AND LONGEVITY OF THE TREES THEREIN. ACTIONS DETRIMENTAL TO TREE HEALTH SURVIVAL WITHIN THE BOUNDARIES OF THE DRIPLINE ARE PROHIBITED WITHOUT THE EXPRES PERMISSION OF THE CITY OF PORT ORANGE AND ANY OTHER AUTHORITY HAVING JURISDICTION OVER THE CONSERVATION EASEMENT. NOTHING HEREIN SHALL, HOWEVER, BE CONSTRUCTED TO PREVENT NATURAL VEGETATION WITHIN THE EASEMENT AREA FROM BEING CLEARED BY HAND TO PROVIDE A NEAT, MANICURED APPEARANCE. IN ADDITION, NOTHING HEREIN SHALL BE CONSTRUED TO PREVENT THE PLACEMENT OF SOD, IRRIGATION AND LANDSCAPE PLANTS OR TO PREVENT NORMAL LAWN MAINTENANCE SUCH AS MOWING, EDGING AND WEEDING NOT HARMFUL TO THE OBJECTIVE OF TREE PRESERVATION WITHIN THE EASEMENT AREA. ANY PROPOSED CONSTRUCTION OR OTHER USE WITHIN A CONSERVATION EASEMENT MUST BE REVIEWED AND APPROVED BY THE CITY OF PORT ORANGE AND ANY OTHER AUTHORITY HAVING JURISDICTION OVER THE CONSERVATION EASEMENT.

13. THE OWNER OF LOT 1, SHALL BE RESPONSIBLE FOR THE OPERATION AND MAINTENANCE OF THE DRAINAGE AND STORMWATER SYSTEM SERVING THE AREA WITHIN THE BOUNDARIES OF THIS PLAT, PURSUANT TO THE STORMWATER MANAGEMENT PLAN APPROVED FOR DEVELOPMENT BY THE CITY OF PORT ORANGE, FLORIDA. SHOULD THE OWNER OF LOT 1 FAIL TO PERFORM MAINTENANCE REPAIRS, AND REPLACEMENT OF THE DRAINAGE AND STORMWATER SYSTEM, THE CITY OF PORT ORANGE SHALL BE ENTITLED TO ENTER UPON THE COMMON AREAS AND DESIGNATED EASEMENT AREAS TO PERFORM NECESSARY MAINTENANCE, REPAIRS, AND REPLACEMENTS OF THE DRAINAGE AND STORMWATER SYSTEM. THE CITY'S RIGHTS AS SET FORTH HEREIN DOES NOT IMPOSE ANY OBLIGATION, BURDEN, RESPONSIBILITY OR LIABILITY UPON THE CITY TO ENTER UPON THE SUBJECT PROPERTY AND TAKE ANY ACTION TO MAINTAIN, REPAIR, OR REPLACE THE PRIVATE DRAINAGE & STORM-WATER SYSTEM. FURTHERMORE, THE CITY SHALL HAVE THE RIGHT TO LIEN ALL OWNERS OF RECORD IN PROPERTY FOR THE COST OF ANY NECESSARY MAINTENANCE AND REPAIRS MADE IN FURTHERANCE OF PROTECTING PUBLIC HEALTH, SAFETY, AND GENERAL WELFARE. IN THE EVENT OF TERMINATION OR DISSOLUTION OR FINAL LIQUIDATION OF THE OWNER OF LOT 1, THE RESPONSIBILITY FOR THE OPERATION AND MAINTENANCE OF THE DRAINAGE AND STORMWATER MANAGEMENT SYSTEM WILL BE TRANSFERRED TO AND ACCEPTED BY AN ENTITY APPROVED BY THE SAINT JOHNS RIVER WATER MANAGEMENT DISTRICT PRIOR TO SUCH TERMINATION, DISSOLUTION, OR LIQUIDATION.

14. THE OWNER OF LOT 1 SHALL BE THE ENTITY RESPONSIBLE FOR THE OPERATION AND MAINTENANCE OF THE PRIVATELY OWNED SANITARY SEWER SYSTEM AND WATER LINE SYSTEM SERVING THE AREA WITHIN THE BOUNDARIES OF THIS PLAT. THE OWNER OF LOT 1 MAY ENTER INTO SEPARATE AGREEMENTS REGARDING THE MAINTENANCE OF SUCH UTILITIES WITH THE LOT OWNERS WITHIN THE PLAT.

15. THE LANDS SHOWN HEREON ARE SUBJECT TO THE CROSS ACCESS AND UTILITY EASEMENTS AND MAINTENANCE OBLIGATIONS SET FORTH IN THE DECLARATION OF RECIPROCAL EASEMENT AGREEMENT WITH COVENANTS, CONDITIONS, AND RESTRICTIONS RECORDED IN OFFICIAL RECORDS BOOK _____, PAGE _____, PUBLIC RECORDS, VOLUSIA COUNTY, FLORIDA.

16. THE OWNER OF LOT 1 HEREBY DECLARES A PERPETUAL NON-EXCLUSIVE EASEMENT IN FAVOR OF THE OWNER OF LOT 2 FOR DRAINAGE PURPOSES, INCLUDING THE CONTINUED COLLECTION, RETENTION, AND TRANSPORTATION OF STORMWATER.

PREPARED BY:
SLIGER & ASSOCIATES, INC.
PROFESSIONAL LAND SURVEYORS
3921 NOVA ROAD
PORT ORANGE, FL. 32127
(386) 761-5385
LICENSED BUSINESS CERTIFICATION NO. 3019

SHOPPES AT SUMMER TREES

A PORTION OF SECTION 18, TOWNSHIP 16 SOUTH, RANGE 33 EAST, LOCATED IN THE CITY OF PORT ORANGE, VOLUSIA COUNTY, FLORIDA

MAP BOOK:__ PAGE:__

GRAPHIC SCALE
0 40 80 120
(IN FEET)
1 inch = 40 ft

CURVE	DELTA ANGLE	RADIUS	ARC LENGTH	CHORD BEARING
C1	36°58'22"	5.00'	3.23'	N73°18'43"W
C2	35°00'32"	5.00'	3.06'	S40°33'44"E
C3	90°00'00"	5.00'	7.85'	N13°04'01"W
C4	121°34'50"	7.50'	15.91'	N28°51'26"W
C5	90°00'00"	5.00'	7.85'	N44°38'50"W
C6	20°10'55"	5.00'	1.76'	S80°15'42"W
C7	49°36'59"	5.00'	4.33'	N64°52'48"W
C8	89°57'32"	5.00'	7.85'	S45°19'56"W
C9	129°44'53"	5.00'	11.32'	S65°13'50"W
C10	90°33'41"	4.00'	6.32'	N45°04'19"E
C11	65°33'32"	5.00'	5.72'	N32°34'15"E
C12	90°00'00"	5.00'	7.85'	S44°38'37"E
C13	0°55'04"	488.00'	7.82'	S08°42'22"W
C14	0°29'00"	500.00'	4.22'	N22°36'42"E
C15	3°46'55"	500.00'	33.00'	N24°44'39"E
C16	0°31'35"	500.00'	4.59'	N26°53'54"E
C17	26°16'58"	35.00'	16.06'	N76°30'22"W
C18	22°30'03"	65.00'	25.53'	S78°23'50"E
C19	89°38'51"	10.00'	15.65'	S44°49'25"E

LINE	BEARING	DISTANCE
L1	N58°04'01"W	3.07'
L2	S31°55'59"W	8.79'
L3	S89°38'51"E	13.53'
L4	N00°21'10"E	10.52'
L5	S42°31'07"W	8.81'
L6	N00°21'21"E	6.16'
L7	N65°20'59"E	3.38'
L8	S39°04'49"W	2.00'
L9	S39°54'19"W	2.00'
L10	N67°37'48"W	2.00'
L11	N62°50'18"W	2.00'
L12	S64°55'58"E	3.18'
L13	S44°30'17"E	4.74'
L14	S89°35'09"E	4.91'
L15	N00°24'51"E	7.50'
L16	N89°35'09"W	1.80'
L17	N44°30'17"W	2.98'
L18	N64°55'58"W	6.73'
L19	S63°21'53"E	17.92'
L20	S67°08'48"E	17.12'
L21	S89°38'51"E	34.93'
L22	N89°38'51"W	5.43'

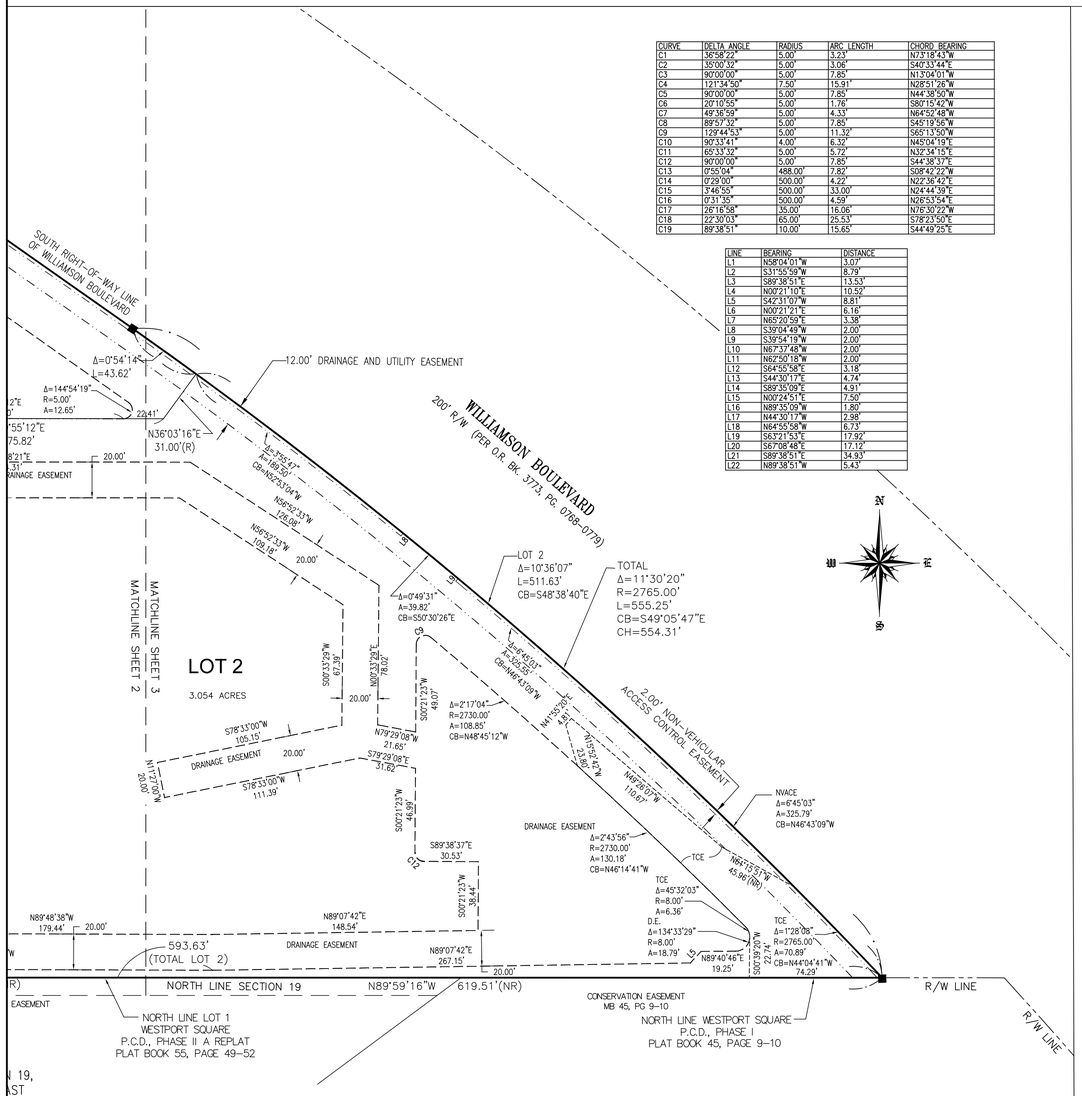

GENERAL NOTES

1. MONUMENTATION
   □ – DENOTES PERMANENT REFERENCE MONUMENT FOUND STAMPED AS NOTED.
   ■ – DENOTES PERMANENT REFERENCE MONUMENT SET
   4X4 CONCRETE MONUMENT STAMPED PRM LB 3019

2. (R) – DENOTES A LINE RADIAL RELATIVE TO ADJACENT CURVE.
   (NR) – DENOTES A LINE NOT RADIAL RELATIVE TO ADJACENT CURVE.

3. DIMENSIONS SHOWN ARE IN FEET AND DECIMALS THEREOF.

4. ACCURACY
THE BOUNDARY LINEAR ERROR OF CLOSURE DOES NOT EXCEED 1:10,000. THE BOUNDARY ANGULAR ERROR OF CLOSURE DOES NOT EXCEED 15 SECONDS MULTIPLIED BY THE SQUARE ROOT OF THE NUMBER OF ANGLES TURNED.

5. BEARING STRUCTURE BASED ON NAD 83 FLORIDA STATE PLANE COORDINATE SYSTEM, EAST ZONE, ALONG THE SOUTHERLY LINE OF THE SOUTHWEST 1/4 OF SECTION 18, TOWNSHIP 16 SOUTH, RANGE 33 EAST BEING N87°39'02"W.

6. NOTE: ALL MEASUREMENTS REFER TO HORIZONTAL PLANE IN ACCORDANCE WITH THE DEFINITION OF THE U.S. SURVEY FOOT OR METER ADOPTED BY THE NATIONAL INSTITUTE OF STANDARDS AND TECHNOLOGY. ALL MEASUREMENTS SHALL USE THE 39.37/12=3.2808333333333 EQUATION FOR CONVERSION FROM A U.S. FOOT TO METERS.

7. NOTICE: THIS PLAT, AS RECORDED IN ITS GRAPHIC FORM, IS THE OFFICIAL DEPICTION OF THE SUBDIVIDED LANDS DESCRIBED HEREIN AND WILL IN NO CIRCUMSTANCES BE SUPPLANTED IN AUTHORITY BY ANY OTHER GRAPHIC OR DIGITAL FORM OF THE PLAT. THERE MAY BE ADDITIONAL RESTRICTIONS THAT ARE NOT RECORDED ON THIS PLAT THAT MAY BE FOUND IN THE PUBLIC RECORDS OF THIS COUNTY.

8. THIS PLAT IS SUBJECT TO ALL EASEMENTS OF RECORD AND RESERVATIONS OF EASEMENTS, INCLUDING BUT NOT LIMITED TO DRAINAGE, UTILITY, AND ACCESS EASEMENTS GRANTED HEREON WHICH SHALL BE LOCATED AS FOLLOWS EXCEPT AS OTHERWISE NOTED ON THE PLAT:

ENTIRE STREET FRONTAGES OF LOTS AND COMMON AREAS: 12.00 FEET WIDE

9. UTILITIES INCLUDE BUT ARE NOT LIMITED TO SANITARY SEWER, POTABLE WATER, RECLAIMED WATER, STORM DRAINAGE, ELECTRIC, TELEPHONE, CABLE TELEVISION, SECURITY, NATURAL GAS, FIBER OPTIC, TELECOMMUNICATION.

10. ALL PLATTED UTILITY EASEMENTS SHALL PROVIDE THAT SUCH EASEMENTS SHALL ALSO BE EASEMENTS FOR THE CONSTRUCTION, INSTALLATION, MAINTENANCE, AND OPERATION OF CABLE TELEVISION SERVICES; PROVIDED, HOWEVER, NO SUCH CONSTRUCTION, INSTALLATION, MAINTENANCE, AND OPERATION OF CABLE TELEVISION SERVICES SHALL INTERFERE WITH THE FACILITIES AND SERVICES OF AN ELECTRIC, TELEPHONE, GAS, OR OTHER PUBLIC UTILITY. IN THE EVENT A CABLE COMPANY DAMAGES THE FACILITIES OF A PUBLIC UTILITY, IT SHALL BE SOLELY RESPONSIBLE FOR THE DAMAGES. THIS SECTION SHALL NOT APPLY TO THOSE PRIVATE EASEMENTS GRANTED TO OR OBTAINED BY A PARTICULAR ELECTRIC, TELEPHONE, GAS, OR OTHER PUBLIC UTILITY. SUCH CONSTRUCTION, INSTALLATION, MAINTENANCE, AND OPERATION SHALL COMPLY WITH THE NATIONAL SAFETY CODE AS ADOPTED BY THE FLORIDA PUBLIC SERVICE COMMISSION.

11. ALL OTHER EASEMENTS ARE SUBORDINATE TO ANY CONSERVATION EASEMENTS DEDICATED HEREON. THERE SHALL BE NO REMOVAL OR DISTURBANCE OF ANY VEGETATION WITHIN SUCH CONSERVATION EASEMENTS. ANY PROPOSED CONSTRUCTION OR OTHER USE WITHIN A CONSERVATION EASEMENT MUST BE REVIEWED AND APPROVED BY THE CITY OF PORT ORANGE AND ANY OTHER AUTHORITY HAVING JURISDICTION OVER THE CONSERVATION EASEMENT.

12. THE TREE CONSERVATION EASEMENT AS DEFINED ON THIS PLAT IS INTENDED TO MEET THE TREE PRESERVATION REQUIREMENTS FOR LOTS 1 AND 2, AND IS FOR THE EXPRESS PURPOSE OF THE PRESERVATION AND LONGEVITY OF THE TREES THEREIN. ACTIONS DETRIMENTAL TO TREE HEALTH SURVIVAL WITHIN THE BOUNDARIES OF THE DRIPLINE ARE PROHIBITED WITHOUT THE EXPRES PERMISSION OF THE CITY OF PORT ORANGE AND ANY OTHER AUTHORITY HAVING JURISDICTION OVER THE CONSERVATION EASEMENT. NOTHING HEREIN SHALL, HOWEVER, BE CONSTRUCTED TO PREVENT NATURAL VEGETATION WITHIN THE EASEMENT AREA FROM BEING CLEARED BY HAND TO PROVIDE A NEAT, MANICURED APPEARANCE. IN ADDITION, NOTHING HEREIN SHALL BE CONSTRUED TO PREVENT THE PLACEMENT OF SOD, IRRIGATION AND LANDSCAPE PLANTS OR TO PREVENT NORMAL LAWN MAINTENANCE SUCH AS MOWING, EDGING AND WEEDING NOT HARMFUL TO THE OBJECTIVE OF TREE PRESERVATION WITHIN THE EASEMENT AREA. ANY PROPOSED CONSTRUCTION OR OTHER USE WITHIN A CONSERVATION EASEMENT MUST BE REVIEWED AND APPROVED BY THE CITY OF PORT ORANGE AND ANY OTHER AUTHORITY HAVING JURISDICTION OVER THE CONSERVATION EASEMENT.

13. THE OWNER OF LOT 1, SHALL BE RESPONSIBLE FOR THE OPERATION AND MAINTENANCE OF THE DRAINAGE AND STORMWATER SYSTEM SERVING THE AREA WITHIN THE BOUNDARIES OF THIS PLAT, PURSUANT TO THE STORMWATER MANAGEMENT PLAN APPROVED FOR DEVELOPMENT BY THE CITY OF PORT ORANGE, FLORIDA. SHOULD THE OWNER OF LOT 1 FAIL TO PERFORM MAINTENANCE REPAIRS, AND REPLACEMENT OF THE DRAINAGE AND STORMWATER SYSTEM, THE CITY OF PORT ORANGE SHALL BE ENTITLED TO ENTER UPON THE COMMON AREAS AND DESIGNATED EASEMENT AREAS TO PERFORM NECESSARY MAINTENANCE, REPAIRS, AND REPLACEMENTS OF THE DRAINAGE AND STORMWATER SYSTEM. THE CITY'S RIGHTS AS SET FORTH HEREIN DOES NOT IMPOSE ANY OBLIGATION, BURDEN, RESPONSIBILITY OR LIABILITY UPON THE CITY TO ENTER UPON THE SUBJECT PROPERTY AND TAKE ANY ACTION TO MAINTAIN, REPAIR, OR REPLACE THE PRIVATE DRAINAGE & STORM-WATER SYSTEM. FURTHERMORE, THE CITY SHALL HAVE THE RIGHT TO LIEN ALL OWNERS OF RECORD IN PROPERTY FOR THE COST OF ANY NECESSARY MAINTENANCE AND REPAIRS MADE IN FURTHERANCE OF PROTECTING PUBLIC HEALTH, SAFETY, AND GENERAL WELFARE. IN THE EVENT OF TERMINATION OR DISSOLUTION OR FINAL LIQUIDATION OF THE OWNER OF LOT 1, THE RESPONSIBILITY FOR THE OPERATION AND MAINTENANCE OF THE DRAINAGE AND STORMWATER MANAGEMENT SYSTEM WILL BE TRANSFERRED TO AND ACCEPTED BY AN ENTITY APPROVED BY THE SAINT JOHNS RIVER WATER MANAGEMENT DISTRICT PRIOR TO SUCH TERMINATION, DISSOLUTION, OR LIQUIDATION.

14. THE OWNER OF LOT 1 SHALL BE THE ENTITY RESPONSIBLE FOR THE OPERATION AND MAINTENANCE OF THE PRIVATELY OWNED SANITARY SEWER SYSTEM AND WATER LINE SYSTEM SERVING THE AREA WITHIN THE BOUNDARIES OF THIS PLAT. THE OWNER OF LOT 1 MAY ENTER INTO SEPARATE AGREEMENTS REGARDING THE MAINTENANCE OF SUCH UTILITIES WITH THE LOT OWNERS WITHIN THE PLAT.

15. THE LANDS SHOWN HEREON ARE SUBJECT TO THE CROSS ACCESS AND UTILITY EASEMENTS AND MAINTENANCE OBLIGATIONS SET FORTH IN THE DECLARATION OF RECIPROCAL EASEMENT AGREEMENT WITH COVENANTS, CONDITIONS, AND RESTRICTIONS RECORDED IN OFFICIAL RECORDS BOOK _____, PAGE _____, PUBLIC RECORDS, VOLUSIA COUNTY, FLORIDA.

16. THE OWNER OF LOT 1 HEREBY DECLARES A PERPETUAL NON-EXCLUSIVE EASEMENT IN FAVOR OF THE OWNER OF LOT 2 FOR DRAINAGE PURPOSES, INCLUDING THE CONTINUED COLLECTION, RETENTION, AND TRANSPORTATION OF STORMWATER.

PREPARED BY:
SLIGER & ASSOCIATES, INC.
PROFESSIONAL LAND SURVEYORS
3921 NOVA ROAD
PORT ORANGE, FL. 32127
(386) 761-5385
LICENSED BUSINESS CERTIFICATION NO. 3019

CITY COUNCIL AGENDA ITEM

COUNCIL MEETING DATE 3/18/2025

SUBJECT: (I21) Direction on the Addition of Fluoride to the City's Water Supply

DEPARTMENT: Public Utilities

GOAL: 2 - Infrastructure

RECOMMENDED MOTION: See options provided below.

SUMMARY: At the February 4 meeting, Council directed Staff to provide information regarding the addition of fluoride in the City's water supply and to bring an agenda item forward for Council to formally consider whether or not to continue with the practice.

The practice of fluoridating drinking water in Port Orange began in 1982 (see Reso. No. 82-15 attached). At that time, both the Volusia County Dental Association and the Volusia County Health Department recommended that the City add the chemical to the water supply for reasons of dental health.

The City Council last discussed this issue in 2015/2016. At its November 17, 2015 meeting of City Council, the Councilmembers heard a presentation by Dr. Duranceau, Associate Professor of Environmental Engineering at UCF College of Engineering and Computer Science. Dr. Duranceau prepared a fluoridation fact sheet (see attached) to aid in City Council's discussion and consideration.

More recently, the State's Surgeon General, Dr. Joseph A. Ladapo, has discussed ending the practice of fluoridation of drinking water. On November 22, 2024, Dr. Ladapo formally issued state-wide guidance recommending against community water fluoridation citing to the neuropsychiatric risk associated with fluoride exposure, particularly in pregnant women and children, and the wide availability of alternative sources of fluoride for dental health (see Guidance attached).

The additional attached information includes the Safety Data Sheet for the fluoride product used by the City and other background information, as well as a draft Resolution No. 25-19 for your consideration.

OPTIONS FOR DIRECTION:

Option 1 - Move to continue adding fluoride to the City's water supply
Option 2 - Move to approve Resolution No. 25-19 discontinuing the addition of fluoride to the City's water supply

Option 3 - Other possible options proposed by Council

PRESENTER: Wayne Clark, Matthew Jones, Steve Parnell

ATTACHMENTS:

1.	Reso No. 82-15	Reso No. 82-15.pdf
2.	Fluoride Fact Sheet UCF 2015	Fluoride Fact Sheet UCF 2015.pdf
3.	GUIDANCECommunityWaterFluoridation	GUIDANCECommunityWaterFluoridation.pdf
4.	Sds Hydrofluosilicic acid	Sds Hydrofluosilicic acid.pdf
5.	Background information for CC	Background information for CC.docx
6.	Reso. No. 25-19 - Repealing Reso	Reso. No. 25-19 - Fluoride Reso MJrev3.6.25.pdf

Robin Fenwick	Created/Initiated - 2/27/2025
Matthew Jones	Approved - 3/6/2025
Wayne Clark	Approved - 3/10/2025
Robin Fenwick	Final Approval - 3/10/2025

RESOLUTION NO. 82-15

A RESOLUTION OF THE CITY COUNCIL OF THE CITY OF PORT ORANGE, VOLUSIA COUNTY, FLORIDA AUTHORIZING INSTALLATION AND ACTIVATION OF FLUORIDATION OF THE CITY'S WATER SUPPLY; AUTHORIZING THE MAYOR TO EXECUTE ALL DOCUMENTS WITH REGARD TO FLUORIDATION OF THE CITY'S WATER SUPPLY; AND PROVIDING AN EFFECTIVE DATE.

WHEREAS, it has been determined that the introduction of fluoride into water supplies intended for human consumption is necessary for the protection of the dental health and safety of citizens, and

WHEREAS, the Florida Department of Environmental Regulation permits the addition of fluoride into public water supplies as authorized by Chapter 17-22 of the Florida Administrative Code, and

WHEREAS, the Volusia County Dental Association and the Volusia County Health Department encourage the addition of fluoride to the City of Port Orange water supply for reasons of dental health.

NOW, THEREFORE, BE IT RESOLVED BY THE CITY COUNCIL OF THE CITY OF PORT ORANGE, VOLUSIA COUNTY, FLORIDA THAT:

SECTION 1: The City Manager is hereby authorized to install and activate equipment for the purpose of applying fluoride to the public water supply of the City of Port Orange, in accordance with the regulations set forth in the Florida Administrative Code.

SECTION 2: The Mayor is hereby authorized to execute all necessary documents with regard to implementation of the City's fluoridation program.

SECTION 3: This Resolution shall become effective immediately upon adoption.

MAYOR JAMES R. FISHER

ATTEST:

Marion J. Zeller, City Clerk

Adopted this 5th day of April, 1982

Reviewed and Approved: City Attorney

COMMUNITY WATER FLUORIDATION FACT SHEET

Dr. Steven J. Duranceau, P.E.
Associate Professor
Director, Environmental Systems Engineering Institute
Civil, Environmental & Construction Engineering
University of Central Florida
Orlando, Florida

History and Current Practices of Community Water Fluoridation

a) Grand Rapids, Michigan was the first city to practice community water fluoridation (1945).

b) Community water fluoridation practices are reported to the Centers for Disease Control (CDC).

c) Fluoridation is practiced by approximately 16,000 public water systems across the United States.

d) Of those utilities that serve over 100,000 people, about 90 percent add fluoride to their water. Most of the utilities that do not fluoridate are small systems.

e) Since 1950, approximately 300 utilities in the United States have voted in some manner to stop fluoridation, representing less than 2 percent of the systems who fluoridate.

Basic Facts Regarding Fluoride and Fluoridation

a) Trace amounts of fluoride occur naturally in water in mineral form. Water supplies across the United States naturally contain low concentration levels of fluoride. Fluoride levels in central Florida groundwater varies between 0.1 and 0.4 mg/L (in general).

b) The USEPA has documented a link between prolonged exposure to high-level fluoride concentration and skeletal fluorosis, a condition similar to osteoporosis, as well as digestive and nervous system disorders. In addition, exposure to high levels of fluoride can cause dental fluorosis, a condition which leads to mottled tooth enamel, tooth discoloration, and in some cases erosion of effected teeth to the gumline. Hence, drinking water's fluoride content is hence limited under federal law. In 1986, the Environmental Protection Agency (EPA) set the maximum contaminant level (MCL) for fluoride in drinking water at 4 mg/L, and is only applicable to source waters with natural fluoride. The EPA Secondary Standard for fluoride is 2 mg/L.

c) The US Department of Health and Human Services has not recognized a causal link between low-level fluoride exposure and occurrences of cancer, brain damage or osteoporosis.

d) The concentration recommended by the Public Health Service (PHS) and the CDC has been adjusted since 1982. The current recommendation is 0.7 mg/L, which is believed to be the optimum level of fluoride that will prevent tooth decay and have a low risk of dental fluorosis (Department of Health and Human Services Federal Panel on Community Water Fluoridation, Public Health Reports, 2015).

e) The three primary chemicals used in fluoridation are sodium fluoride (sodium and fluoride atoms bonded together), sodium fluorosilicate (sodium, silicon and fluoride) and fluorosilic acid (hydrogen, silicon and fluoride).

Organizations that Support Fluoridation of Public Water Supplies

a) The American Water Works Association (AWWA) supports fluoridation of water supplies in a safe, effective and reliable manner within limits prescribed by public health officials subject to local decision-making processes. Since 1945, American water systems have added fluoride to their water supplies (Denver CO: American Water Works Association).

b) The American Dental Association (ADA) endorsed fluoridation in 1950, reaffirming its endorsement in 1997. The American Medical Association endorsed fluoridation in 1951, and reaffirmed its endorsement in 1996. The U.S. Public Health Service has also endorsed fluoridation.

c) As part of its "Healthy People 2000" project, the Center for Disease Control and Prevention (CDC) set a goal of increasing the level of the American population serviced by fluoridated water systems to 75 percent by the year 2010. Twenty states and the District of Columbia exceeded the Healthy People 2000 target. These States represent over 60 percent of the U.S. population.

Recent Studies of Interest

- May 2014. A New Zealand study finds no correlation between fluoridated water and lower IQs. New research from the University of Otago's Dunedin Multidisciplinary Study does not support claims that fluoridating water adversely affects children's mental development and adult intelligence quotient (IQ) as published in the May 15 (2015) issue of American Journal of Public Health.
- June 2015. Researchers at the University of Nevada recommend a lower limit of 0.6 mg/L for fluoride in drinking water in hot climates for children under six years of age based on data collected in the Upper East Region of Ghana, as published on June 8 (2015) in Science of the Total Environment.

Benefits

- Fluoride, when administered at low concentration levels, is proven to help prevent tooth decay.
- Although fluoride is present in toothpaste, dental applications, and mouthwashes, these are temporary doses. Fluoridated drinking water provides the consistent fluoride concentration in the saliva and dental plaque that prevents oral bacteria from attacking tooth enamel and causing decay (Toumba and Curzon, 2001. "Fluoride Concentrations in Saliva Related to Dental Caries Prevalence in Primary Teeth." *European Journal of Paediatric Dentistry* 2: 15-19.)
- Minorities and persons living below the poverty line have higher rates of decayed and missing teeth (Hudson et al., 2007. "The impact of socioeconomic status and race ethinicity on dental health." *Sociological Perspectives* 50(1): 7-25).
- Fluoridation protects all ages against cavities. Studies show that fluoride in community water systems prevents at least 25 percent of tooth decay in children and adults, even in an era with widespread availability of fluoride from other sources (such as fluoride toothpaste).

Issues and Concerns

- There are health-related concerns including, but not limited to, dental fluorosis, skeletal fluorosis, neurological effects, carcinogenicity, and endocrine disruption. Most of these concerns are cited by research performed in areas of the world where there is endemic fluoride exposure due to naturally high water concentrations and high air concentrations due to open coal burning. Generally, these concerns are not applicable to areas that practice community water fluoridation.
- The adverse effects of fluoride on the human endocrine system have not been adequately researched to date.
- There are concerns about the safety of the additives used in community water fluoridation. These concerns include the possibility of the additives not completely dissociating in water (and being a health risk) and the concern for utility worker safety when handling the additives. Research indicates that the additives do completely dissociate in water and do not pose a health risk. Utility workers undergo training and certifications to protect their health as well as public health.
- There are some ethical concerns about community water fluoridation. Some view it as a forced form of mass medication, whose dosage cannot be controlled, and with no easy way to opt out. U.S. court decisions have rejected the argument that fluoride is a medication that should not be allowed in water (Burt B, Eklund S. Dentistry, Dental Practice, and the Community,6th Edition. 2005. (Elsevier Saunders: St. Louis), p. 341.). However, fluoride is a mineral and not a medication.
- The cost-effectiveness of community water fluoridation has been discussed on both sides of fluoridation arguments. Fluoridation costs large utilities' customers less than $1 annually per customer. The benefits have been estimated to be about $30 per customer annually in cost savings (per person) associated with caries treatment (U.S. Department of Health and Human Services Federal Panel on Community Water Fluoridation 2015).

Additional Resources

- Cornwell, D.A, McTigue, N.E, and S.Hayes. 2015. State of the Science: Community Water Fluoridation. Denver, CO: Water Research Foundation. 48 pages.
- Centers for Disease Control and Prevention site: http://www.cdc.gov/fluoridation/index.htm.
- Environmental Protection Agency website: http://water.epa.gov/drink/contaminants/basicinformation/fluoride.cfm
- American Dental Association's website: http://www.ada.org/en/public-programs/advocating-for-the-public/fluoride-and-fluoridation
- American Water Works Association website: http://www.awwa.org/legislation-regulation/regulations/chemical-contaminants/fluoride.aspx
- National Academy of Sciences. 2006. Fluoride in Drinking Water: A Scientific Review of EPA's Standards. Washington D.C.: The National Academies Press. http://www.nap.edu/catalog/11571.html

Guidance for Community Water Fluoridation

November 22, 2024

Tallahassee, Fla. – State Surgeon General Dr. Joseph A. Ladapo recommends against community water fluoridation due to the neuropsychiatric risk associated with fluoride exposure.

Fluoride is a naturally occurring ion present in groundwater, fresh and salt water, rainwater, soil, plants, and foods. Community water fluoridation is the process of adjusting the amount of fluoride in drinking water to the level recommended to prevent tooth decay. Historically, community water fluoridation was considered to be a method to systemically, through ingestion, deliver fluoride to all community members. However, currently many municipalities across the U.S. and several European countries, including Austria, Belgium, France, Germany, Italy, Norway, and Sweden, have eliminated water fluoridation.

Today, fluoride is widely available from multiple sources, including topical fluorides, such as toothpaste, mouthwashes, and fluoride applications by dental providers. Evidence shows fluoride strengthens teeth, making them more decay resistant. However, additional research is being conducted to review the impacts of overall fluoride exposure in the population.

Several studies have reviewed fluoride exposure in vulnerable populations:

- A Mexico City, Mexico, study published in 2017 found that prenatal fluoride exposure was associated with lower IQ in both boys and girls ages six to twelve. Similarly, a nationwide Canadian study found that higher maternal urinary fluoride in pregnancy was associated with reduced IQ in boys ages three to four. The fluoride exposure levels in these studies are comparable to those found in pregnant women in the United States.

- A Canadian cross-sectional study published in 2019 found an association between exposure to fluoridated water and attention deficit hyperactivity disorder (ADHD) among children and adolescents between the ages of six and seventeen.

- Similarly, higher prenatal fluoride exposure was associated with increased incidence of ADHD in children ages six through twelve in a subgroup of the Mexico City, Mexico study.

- A 2023 Canadian study found that maternal exposure to fluoridated drinking water at 0.7 milligrams per liter throughout pregnancy was associated with decreased child inhibitory control and cognitive flexibility, particularly in girls.

- Another study published in JAMA Network Open in May 2024, found higher prenatal fluoride exposure was associated with increased child neurobehavioral problems in Los Angeles, California. The authors recommended establishing guidelines for limiting fluoride exposure during pregnancy.

- On August 22, 2024, the U.S. Department of Health and Human Services National Toxicology Program (NTP) published a report evaluating total fluoride exposure from all sources.

- The report highlights a concern that some pregnant women and children may be receiving more fluoride than necessary due to fluoride exposure from multiple sources, including treated public water, water-added foods and beverages, teas, toothpaste, floss, and mouthwash. Thus, the combined total intake of fluoride may exceed safe amounts.

- The report states that the majority of the 72 epidemiological studies pertaining to fluoride's impacts on children's IQ, published through April 2021, found an association between higher levels of fluoride consumption and reduced IQ in children.

- While there is insufficient data to determine if the lower level of 0.7 milligrams per liter, currently recommended for U.S. community water systems, has a negative impact on children's IQ, the report concludes that there is moderate confidence in the scientific evidence that points to an association between higher levels of fluoride consumption and lower IQ in children.[1]

- On September 24, 2024, a U.S. District Court ruled that community water fluoridation at 0.7 milligrams per liter presents an unreasonable risk of injury to health under the Amended Toxic Substances Control Act (Amended TSCA) and the U.S. Environmental Protection Agency is obliged to take regulatory action in response.

Other studies point to various potential impacts associated with systemic fluoride consumption that should be considered when weighing the risks and benefits of adding fluoride to community water systems, including increased risks of developing sleep apnea, accumulation of fluoride in the pineal gland, sleep cycle disturbance, premature menarche in adolescent girls, negative impacts on the thyroid gland, and elevated occurrences of skeletal fluorosis.

Due to the neuropsychiatric risk associated with fluoride exposure, particularly in pregnant women and children, and the wide availability of alternative sources of fluoride for dental health, the State Surgeon General recommends against community water fluoridation.

The Florida Department of Health strongly supports oral and overall health through:

- Operation and expansion of school-based preventive dental services.
- County health department dental clinics, which provide dental services to communities.
- Screening and treatment referral in pre-school and school settings.
- Provider education, including training on oral health service delivery for those with special health care needs.
- Promotion of healthy habits, with emphasis on a reduction in sugar consumption, through oral health education to communities.
- Providing oral health care supplies to community partners.
- Providing tobacco and vaping cessation resources and services.

Based on self-reported data from 2023, it is estimated that more than 70% of Floridians on community water systems receive fluoridated water. To see if your community water system is included, please visit the webpage Public Water Systems Actively Fluoridating.

References

1. About Community Water Fluoridation | Fluoridation | CDC
2. Fluoridation policy and practice: A European Story separating myths from reality.
3. Prenatal Fluoride Exposure and Cognitive Outcomes in Children at 4 and 6–12 Years of Age in Mexico | Environmental Health Perspectives | Vol. 125, No. 9
4. Association Between Maternal Fluoride Exposure During Pregnancy and IQ Scores in Offspring in Canada - PubMed
5. Urinary fluoride levels and metal co-exposures among pregnant women in Los Angeles, California - PMC
6. Association of water fluoride and urinary fluoride concentrations with attention deficit hyperactivity disorder in Canadian youth - PubMed
7. Prenatal fluoride exposure and attention deficit hyperactivity disorder (ADHD) symptoms in children at 6–12 years of age in Mexico City - ScienceDirect
8. Fluoride exposure during pregnancy from a community water supply is associated with executive function in preschool children: A prospective ecological cohort study - PubMed
9. Maternal Urinary Fluoride and Child Neurobehavior at Age 36 Months | Public Health | JAMA Network Open | JAMA Network
10. NTP Monograph: State of the Science Concerning Fluoride Exposure and Neurodevelopment and Cognition: A Systematic Review; August 2024
11. Food & Water Watch, Inc., et al. v. Environmental Protection Agency, et al. | United States Courts
12. COMPS-895.pdf
13. Fluoride exposure and sleep patterns among older adolescents in the United States: a cross-sectional study of NHANES 2015-2016 - PubMed
14. Fluoride Exposure and Age of Menarche: Potential Differences Among Adolescent Girls and Women in the United States | Exposure and Health
15. Fluoride exposure and thyroid function among adults living in Canada: Effect modification by iodine status - PubMed
16. Fluoride in Drinking Water and Skeletal Fluorosis: a Review of the Global Impact - PubMed

Fluorosilicic Acid (FSA)

Safety Data Sheet

according to Federal Register / Vol. 77, No. 58 / Monday, March 26, 2012 / Rules and Regulations

Date of issue: 03/25/2021 Version: 1.0

SECTION 1: Identification

1.1. Identification

Product form	:	Substance
Substance name	:	Fluorosilicic Acid (FSA)
Chemical name	:	Hydro Fluorosilicic Acid (HSA)
Product code	:	M17200

1.2. Recommended use and restrictions on use

1.3. Supplier

JR Simplot Company

P.O. Box 70013

Boise, ID 83707

T 1-208-336-2110

1.4. Emergency telephone number

Emergency number : CHEMTREC 1-800-424-9300

SECTION 2: Hazard(s) identification

2.1. Classification of the substance or mixture

GHS-US classification

Corrosive to metals, Category 1	H290	May be corrosive to metals.
Acute toxicity (oral), Category 4	H302	Harmful if swallowed.
Skin corrosion/irritation, Category 1	H314	Causes severe skin burns and eye damage.

Full text of H statements : see section 16

2.2. GHS Label elements, including precautionary statements

GHS US labelling

Hazard pictograms (GHS US) :

Signal word (GHS US) : Danger

Hazard statements (GHS US) :
H290 - May be corrosive to metals.
H302 - Harmful if swallowed.
H314 - Causes severe skin burns and eye damage.

Precautionary statements (GHS US) :
P234 - Keep only in original container.
P260 - Do not breathe dust/fume/gas/mist/vapours/spray.
P264 - Wash hands, forearms and face thoroughly after handling.
P270 - Do not eat, drink or smoke when using this product.
P280 - Wear protective gloves/protective clothing/eye protection/face protection.
P301+P312 - If swallowed: Call a poison center/doctor/… if you feel unwell
P301+P330+P331 - If swallowed: rinse mouth. Do NOT induce vomiting
P303+P361+P353 - If on skin (or hair): Take off immediately all contaminated clothing. Rinse skin with water/shower
P304+P340 - If inhaled: Remove person to fresh air and keep comfortable for breathing
P305+P351+P338 - IF IN EYES: Rinse cautiously with water for several minutes. Remove contact lenses, if present and easy to do. Continue rinsing.
P310 - Immediately call a poison center/doctor/…
P321 - Specific treatment (see supplemental first aid instruction on this label)
P330 - Rinse mouth.
P363 - Wash contaminated clothing before reuse.
P390 - Absorb spillage to prevent material damage.
P405 - Store locked up.
P406 - Store in corrosive resistant container with a resistant inner liner.
P501 - Dispose of contents/container to hazardous or special waste collection point, in accordance with local, regional, national and/or international regulation

2.3. Other hazards which do not result in classification

No additional information available

2.4. Unknown acute toxicity (GHS US)

Not applicable

SECTION 3: Composition/information on ingredients

3.1. Substances

Name : Fluorosilicic Acid (FSA)

Name	Product identifier	%	GHS-US classification
Water	(CAS-No.) 7732-18-5	75 – 78	Not classified
hexafluorosilicic acid	(CAS-No.) 16961-83-4	23 – 25	Skin Corr. 1B, H314

Full text of hazard classes and H-statements : see section 16

3.2. Mixtures

Not applicable

SECTION 4: First-aid measures

4.1. Description of first aid measures

First-aid measures general : If you feel unwell, seek medical advice. Never give anything by mouth to an unconscious person. If you feel unwell, seek medical advice (show the label where possible). Call a physician immediately.

First-aid measures after inhalation : Remove person to fresh air and keep comfortable for breathing. Allow affected person to breathe fresh air. Allow the victim to rest.

First-aid measures after skin contact : Remove affected clothing and wash all exposed skin area with mild soap and water, followed by warm water rinse. Rinse skin with water/shower. Take off immediately all contaminated clothing. Call a physician immediately.

First-aid measures after eye contact : Rinse immediately with plenty of water. Obtain medical attention if pain, blinking or redness persists. Rinse cautiously with water for several minutes. Remove contact lenses, if present and easy to do. Continue rinsing. Call a physician immediately.

First-aid measures after ingestion : Rinse mouth. Do NOT induce vomiting. Obtain emergency medical attention. Call a POISON CENTER/doctor if you feel unwell. Do not induce vomiting. Call a physician immediately.

4.2. Most important symptoms and effects (acute and delayed)

Potential adverse human health effects and symptoms : Based on available data, the classification criteria are not met. Harmful if swallowed.

Symptoms/effects after skin contact : Burns.

Symptoms/effects after eye contact : Serious damage to eyes.

Symptoms/effects after ingestion : Swallowing a small quantity of this material will result in serious health hazard. Burns.

4.3. Immediate medical attention and special treatment, if necessary

Treat symptomatically.

SECTION 5: Fire-fighting measures

5.1. Suitable (and unsuitable) extinguishing media

Suitable extinguishing media : Foam. Dry powder. Carbon dioxide. Water spray. Sand.

Unsuitable extinguishing media : Do not use a heavy water stream.

5.2. Specific hazards arising from the chemical

Hazardous decomposition products in case of fire : Toxic fumes may be released.

5.3. Special protective equipment and precautions for fire-fighters

Firefighting instructions : Use water spray or fog for cooling exposed containers. Exercise caution when fighting any chemical fire. Prevent fire fighting water from entering the environment.

Protection during firefighting : Do not attempt to take action without suitable protective equipment. Self-contained breathing apparatus. Complete protective clothing. Do not enter fire area without proper protective equipment, including respiratory protection.

SECTION 6: Accidental release measures

6.1. Personal precautions, protective equipment and emergency procedures

6.1.1. For non-emergency personnel

Emergency procedures : Ventilate spillage area. Evacuate unnecessary personnel. Avoid contact with skin and eyes. Do not breathe dust/fume/gas/mist/vapours/spray.

6.1.2. For emergency responders

Protective equipment : Do not attempt to take action without suitable protective equipment. For further information refer to section 8: "Exposure controls/personal protection". Equip cleanup crew with proper protection.

Emergency procedures : Ventilate area.

6.2. Environmental precautions

Avoid release to the environment. Prevent entry to sewers and public waters. Notify authorities if liquid enters sewers or public waters.

6.3. Methods and material for containment and cleaning up

Methods for cleaning up : Take up liquid spill into absorbent material. Soak up spills with inert solids, such as clay or diatomaceous earth as soon as possible. Collect spillage. Store away from other materials. Absorb spillage to prevent material damage.

Other information : Dispose of materials or solid residues at an authorized site.

6.4. Reference to other sections

For further information refer to section 13. See Heading 8. Exposure controls and personal protection.

SECTION 7: Handling and storage

7.1. Precautions for safe handling

Additional hazards when processed : May be corrosive to metals.

Precautions for safe handling : Ensure good ventilation of the work station. Wear personal protective equipment. Wash hands and other exposed areas with mild soap and water before eating, drinking or smoking and when leaving work. Provide good ventilation in process area to prevent formation of vapour. Avoid contact with skin and eyes. Do not breathe dust/fume/gas/mist/vapours/spray.

Hygiene measures : Always wash hands after handling the product. Do not eat, drink or smoke when using this product. Wash hands, forearms and face thoroughly after handling. Wash contaminated clothing before reuse.

7.2. Conditions for safe storage, including any incompatibilities

Storage conditions : Store in a well-ventilated place. Keep cool. Keep only in the original container in a cool, well ventilated place away from : Keep container closed when not in use. Store in corrosive resistant container with a resistant inner liner. Keep only in original container. Store locked up.

Incompatible products : Strong bases. Strong acids.

Incompatible materials : Sources of ignition. Direct sunlight. Metals.

Packaging materials : Store in corrosive resistant container with a resistant inner liner.

SECTION 8: Exposure controls/personal protection

8.1. Control parameters

Fluorosilicic Acid (FSA)	
No additional information available	

Water (7732-18-5)	
No additional information available	

hexafluorosilicic acid (16961-83-4)	
USA - ACGIH - Occupational Exposure Limits	
ACGIH TWA (mg/m³)	2.5 mg/m³

8.2. Appropriate engineering controls

Appropriate engineering controls : Ensure good ventilation of the work station.

Environmental exposure controls : Avoid release to the environment.

8.3. Individual protection measures/Personal protective equipment

Personal protective equipment:

Avoid all unnecessary exposure.

Materials for protective clothing:

Use chemically protective clothing

Hand protection:

Acid proof gloves should be worn to prevent contact

Eye protection:

Splash proof goggles and full-face shield should be worn at all times. Safety glasses

Skin and body protection:

Wear suitable protective clothing

Respiratory protection:

Wear appropriate mask

Other information:

Do not eat, drink or smoke during use.

SECTION 9: Physical and chemical properties

9.1. Information on basic physical and chemical properties

Physical state	:	Liquid
Appearance	:	Clear, colorless to pale straw liquid.
Colour	:	Colourless
Odour	:	characteristic
Odour threshold	:	No data available
pH	:	1
Melting point	:	Not applicable
Freezing point	:	No data available
Boiling point	:	105 °C
Flash point	:	No data available
Relative evaporation rate (butylacetate=1)	:	No data available
Flammability (solid, gas)	:	Non flammable.
Vapour pressure	:	No data available
Relative vapour density at 20 °C	:	No data available
Relative density	:	No data available
Solubility	:	Soluble.
Partition coefficient n-octanol/water (Log Pow)	:	No data available
Auto-ignition temperature	:	No data available
Decomposition temperature	:	No data available
Viscosity, kinematic	:	No data available
Viscosity, dynamic	:	No data available
Explosive limits	:	No data available
Explosive properties	:	No data available
Oxidising properties	:	No data available

9.2. Other information

No additional information available

SECTION 10: Stability and reactivity

10.1. Reactivity

The product is non-reactive under normal conditions of use, storage and transport.

10.2. Chemical stability

Stable. Not established.

10.3. Possibility of hazardous reactions

Not established.

10.4. Conditions to avoid

Extremely high temperatures. Direct sunlight. Extremely high or low temperatures.

10.5. Incompatible materials

Alkalis. Chlorites. Combustible solids and organic peroxides. Strong acids. Strong bases. metals. May be corrosive to metals.

10.6. Hazardous decomposition products

Corrosive fumes of fluorides. fume. Carbon monoxide. Carbon dioxide.

SECTION 11: Toxicological information

11.1. Information on toxicological effects

Acute toxicity (oral) : Harmful if swallowed.
Acute toxicity (dermal) : Not classified
Acute toxicity (inhalation) : Not classified

Fluorosilicic Acid (FSA)	
LD50 oral rat	430 mg/kg
ATE US (oral)	430 mg/kg bodyweight

Skin corrosion/irritation : Causes severe skin burns.
pH: 1
Serious eye damage/irritation : Assumed to cause serious eye damage
pH: 1
Respiratory or skin sensitisation : Not classified
Germ cell mutagenicity : Not classified
Carcinogenicity : Not classified

hexafluorosilicic acid (16961-83-4)	
IARC group	3 - Not classifiable

Reproductive toxicity : Not classified

STOT-single exposure : Not classified

STOT-repeated exposure : Not classified

Aspiration hazard : Not classified
Viscosity, kinematic : No data available

Potential adverse human health effects and symptoms : Based on available data, the classification criteria are not met. Harmful if swallowed.
Symptoms/effects after skin contact : Burns.
Symptoms/effects after eye contact : Serious damage to eyes.
Symptoms/effects after ingestion : Swallowing a small quantity of this material will result in serious health hazard. Burns.

SECTION 12: Ecological information

12.1. Toxicity

Ecology - general : The product is not considered harmful to aquatic organisms nor to cause long-term adverse effects in the environment. Before neutralisation, the product may represent a danger to aquatic organisms.

hexafluorosilicic acid (16961-83-4)	
LC50 fish 1	> 10 mg/l (96 h; Brachydanio rerio)
Threshold limit algae 1	10 mg/l (96 h; Scenedesmus quadricauda; Cell numbers)

12.2. Persistence and degradability

Fluorosilicic Acid (FSA)	
Persistence and degradability	Not established.

Water (7732-18-5)	
Persistence and degradability	Not established.

hexafluorosilicic acid (16961-83-4)	
Persistence and degradability	Biodegradability: not applicable. Reacts with water: release of toxic/harmful substances. No (test)data on mobility of the components available. Not established.
Biochemical oxygen demand (BOD)	Not applicable
Chemical oxygen demand (COD)	Not applicable
ThOD	Not applicable
BOD (% of ThOD)	Not applicable

12.3. Bioaccumulative potential

Fluorosilicic Acid (FSA)	
Bioaccumulative potential	Not established.

Water (7732-18-5)	
Bioaccumulative potential	Not established.

hexafluorosilicic acid (16961-83-4)	
Bioaccumulative potential	Not bioaccumulative. Not established.

12.4. Mobility in soil

No additional information available

12.5. Other adverse effects

Other information : Avoid unintentional release to the environment.

SECTION 13: Disposal considerations

13.1. Disposal methods

Waste treatment methods : Dispose of contents/container in accordance with licensed collector's sorting instructions.

Product/Packaging disposal recommendations : Dispose in a safe manner in accordance with local/national regulations. Dispose of contents/container to hazardous or special waste collection point, in accordance with local, regional, national and/or international regulation.

Ecology - waste materials : Avoid unintentional release to the environment.

SECTION 14: Transport information

Department of Transportation (DOT)

In accordance with DOT

Transport document description : UN1778 Fluorosilicic acid, 8, II

UN-No.(DOT) : UN1778

Proper Shipping Name (DOT) : Fluorosilicic acid

Class (DOT) : 8 - Class 8 - Corrosive material 49 CFR 173.136

Packing group (DOT) : II - Medium Danger

Hazard labels (DOT) : 8 - Corrosive

DOT Packaging Non Bulk (49 CFR 173.xxx) : 202

DOT Packaging Bulk (49 CFR 173.xxx) : 242

DOT Special Provisions (49 CFR 172.102)	:	A6 - For combination packagings, if plastic inner packagings are used, they must be packed in tightly closed metal receptacles before packing in outer packagings. A7 - Steel packagings must be corrosion-resistant or have protection against corrosion. B2 - MC 300, MC 301, MC 302, MC 303, MC 305, and MC 306 and DOT 406 cargo tanks are not authorized. B15 - Packagings must be protected with non-metallic linings impervious to the lading or have a suitable corrosion allowance. IB2 - Authorized IBCs: Metal (31A, 31B and 31N); Rigid plastics (31H1 and 31H2); Composite (31HZ1). Additional Requirement: Only liquids with a vapor pressure less than or equal to 110 kPa at 50 C (1.1 bar at 122 F), or 130 kPa at 55 C (1.3 bar at 131 F) are authorized. N3 - Glass inner packagings are permitted in combination or composite packagings only if the hazardous material is free from hydrofluoric acid. N34 - Aluminum construction materials are not authorized for any part of a packaging which is normally in contact with the hazardous material. T8 - 4 178.274(d)(2) Normal..... Prohibited TP2 - a. The maximum degree of filling must not exceed the degree of filling determined by the following: (image) Where: tr is the maximum mean bulk temperature during transport, tf is the temperature in degrees celsius of the liquid during filling, and a is the mean coefficient of cubical expansion of the liquid between the mean temperature of the liquid during filling (tf) and the maximum mean bulk temperature during transportation (tr) both in degrees celsius. b. For liquids transported under ambient conditions may be calculated using the formula: (image) Where: d15 and d50 are the densities (in units of mass per unit volume) of the liquid at 15 C (59 F) and 50 C (122 F), respectively. TP12 - This material is considered highly corrosive to steel.
DOT Packaging Exceptions (49 CFR 173.xxx)	:	None
DOT Quantity Limitations Passenger aircraft/rail (49 CFR 173.27)	:	1 L
DOT Quantity Limitations Cargo aircraft only (49 CFR 175.75)	:	30 L
DOT Vessel Stowage Location	:	A - The material may be stowed ‘‘on deck’’ or ‘‘under deck’’ on a cargo vessel and on a passenger vessel.
Other information	:	No supplementary information available.

Transportation of Dangerous Goods

Transport by sea

Air transport

SECTION 15: Regulatory information

15.1. US Federal regulations

Fluorosilicic Acid (FSA)
Not listed on the United States TSCA (Toxic Substances Control Act) inventory

All components of this product are listed, or excluded from listing, on the United States Environmental Protection Agency Toxic Substances Control Act (TSCA) inventory

15.2. International regulations

CANADA

Water (7732-18-5)
Listed on the Canadian DSL (Domestic Substances List)

hexafluorosilicic acid (16961-83-4)
Listed on the Canadian DSL (Domestic Substances List)

EU-Regulations

No additional information available

National regulations

No additional information available

15.3. US State regulations

California Proposition 65 - This product does not contain any substances known to the state of California to cause cancer, developmental and/or reproductive harm

Component	State or local regulations
hexafluorosilicic acid(16961-83-4)	U.S. - Massachusetts - Right To Know List; U.S. - New Jersey - Right to Know Hazardous Substance List

SECTION 16: Other information

according to Federal Register / Vol. 77, No. 58 / Monday, March 26, 2012 / Rules and Regulations

Other information : None.

Full text of H-statements:

H290	May be corrosive to metals.
H302	Harmful if swallowed.
H314	Causes severe skin burns and eye damage.

NFPA health hazard : 3 - Materials that, under emergency conditions, can cause serious or permanent injury.

NFPA fire hazard : 0 - Materials that will not burn under typical fire conditions, including intrinsically noncombustible materials such as concrete, stone, and sand.

NFPA reactivity : 0 - Material that in themselves are normally stable, even under fire conditions.

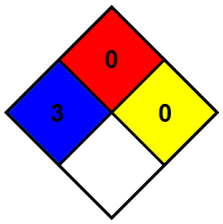

Hazard Rating

Health : 3 Serious Hazard - Major injury likely unless prompt action is taken and medical treatment is given

Flammability : 0 Minimal Hazard - Materials that will not burn

Physical : 0 Minimal Hazard - Materials that are normally stable, even under fire conditions, and will NOT react with water, polymerize, decompose, condense, or self-react. Non-Explosives.

SDS US (GHS HazCom 2012)

Disclaimer: This information relates to the specific material designated and may not be valid for such material used in combination with any other materials or in any process. Such information is to the best of our knowledge and belief, accurate and reliable as of the date compiled. However, no representation, warranty or guarantee is made as to its accuracy, reliability or completeness. NO WARRANTY OF MERCHANTABILITY, FITNESS FOR ANY PARTICULAR PURPOSE, OR ANY OTHER WARRANTY, EXPRESS OR IMPLIED, IS MADE CONCERNING THE INFORMATION HEREIN PROVIDED. It is the user's responsibility to satisfy himself as to the suitability and completeness of such information for his own particular use. We do not accept liability for any loss or damage that may occur from the use of this information nor do we offer warranty against patent infringement.

Fluoride Information provided by City Public Utilities Staff

Fluoride Guidelines

EPA limits 4.0 mg/l max, 2.0 mg/l secondary

U.S. Department of Health and Human Services and Center for Disease Control and Prevention recommend 0.7 mg/l

City of Port Orange Drinking Water

Raw source water to Water Treatment Plant has naturally occurring fluoride levels of ≈0.18 mg/l

Finished drinking water to residents in Port Orange fluoride level of 0.50-0.67 mg/l

In FY24 we spent $21,708.09 on Hydrofluoric Acid (40%). Roughly 5 deliveries a year - use about 110lb/day.

RESOLUTION NO. 25-19

A RESOLUTION OF THE CITY COUNCIL OF THE CITY OF PORT ORANGE, VOLUSIA COUNTY, FLORIDA; REPEALING, REPLACING, AND SUPERSEDING RESOLUTION 82-15 AND DISCONTINUING THE SUPPLEMENTAL FLUORIDATION OF THE CITY'S WATER SUPPLY; MAKING FINDINGS OF FACT IN SUPPORT THEREOF; PROVIDING FOR REPEAL OF CONFLICTING RESOLUTIONS; PROVIDING FOR SEVERABILITY; AND PROVIDING AN EFFECTIVE DATE.

WHEREAS, on April 5, 1982, the City Council of the City of Port Orange, Florida (the "City") adopted Resolution 82-15 authorizing the City Manager to install and activate equipment for the purpose of applying fluoride to the City's water supply; and

WHEREAS, the fluoridation of the City's water supply is not mandated by any applicable federal or state law, rule, or regulation; and

WHEREAS, on November 22, 2024, the State Surgeon General, Dr. Joseph A. Ladapo, published "Guidance for Community Water Fluoridation" specifically recommending against community water fluoridation due to the neuropsychiatric risk associated with fluoride exposure; and

WHEREAS, the City staff has indicated that the City spends approximately Twenty-one Thousand Dollars ($21,000) annually for the cost of obtaining fluoride to add to the City's water supply; and

WHEREAS, the City Council finds that it is appropriate to discontinue the supplemental addition of fluoride to the City's water supply based on recent data and information; and

WHEREAS, it is in the best interest of the public and will promote the health, safety and

welfare of the City's residents and business owners and fiscally benefit the City's water utility to discontinue the fluoridation of the City's water supply via the adoption of this Resolution.

NOW, THEREFORE, BE IT RESOLVED BY THE CITY COUNCIL OF THE CITY OF PORT ORANGE, VOLUSIA COUNTY, FLORIDA:

Section 1. **Findings of Fact**

That the above Whereas clauses are hereby incorporated herein and are adopted as factual findings and are the factual basis for the passage of this Resolution.

Section 2. **Repeal of Resolution No. 82-15**

Resolution No. 82-15 of the City of Port Orange, Volusia County, Florida, is hereby repealed in its entirety. The City Council does hereby direct the City Manager to discontinue the City's practice of fluoridation of the City water supply system. The City Manager or his designee is hereby authorized to take all necessary actions to implement the discontinuance of the fluoridation of the City's water supply on or before May 1, 2025 or as soon as reasonably practicable thereafter taking into consideration operational efficiencies and objectives of the operation of the City's utility system.

Section 3. **Conflicts**

All other resolutions or parts of resolutions, insofar as they are inconsistent or in conflict with the provisions of this resolution, are hereby repealed.

Section 4. **Severability**

If any section or portion of a section of this resolution proves to be invalid, unlawful or unconstitutional, it shall not be held to invalidate or impair the validity, force or effect of any other section or part of this resolution.

Section 5. **Effective Date**

This resolution shall become effective immediately upon adoption.

_____
MAYOR SCOTT STILTNER

ATTEST:

_____
Robin L. Fenwick, MMC, City Clerk

Adopted on the_____day of_____

Reviewed and Approved: _____
Matthew Jones, City Attorney