AGENDA
PLANNING COMMISSION
CITY OF PORT ORANGE

Meeting Date: Thursday, June 22, 2023

Time: 5:30 PM

Location: Council Chambers, City Hall
1000 City Center Circle
Port Orange

A. CALL TO ORDER

1. Pledge of Allegiance
2. Roll Call

B. DISCUSSION/ACTION

3. Consideration of Minutes - May 25, 2023
4. APPLICATION: 2023 Water Supply Work Plan
   CASE NO.: N/A
   APPLICANT: City of Port Orange
   STAFF CONTACT: Penelope Cruz, Planning Manager (386) 506-5671

   An administrative request for approval of the 2023 Water Supply Work Plan as required by Florida Statutes.
5. APPLICATION: Variance/ 609 Herbert Street
   CASE NO.: VARC-23-0001
   APPLICANT: Robert Ball, P.E., Zev Cohen & Associates
   STAFF CONTACT: Gwen Perney, Planner (386) 506-5673

   A request by the applicant for a variance to allow a variable width wetland buffer that averages 25 feet in width with a 16.7-foot minimum buffer width in lieu of a static 25-foot wide wetland buffer for the proposed Coastal Oaks residential subdivision.
6. APPLICATION: Coastal Oaks Subdivision Plat and Plans
   CASE NO.: SUBD-23-0001
   APPLICANT: Robert Ball, P.E., Zev Cohen & Associates
   STAFF CONTACT: Gwen Perney, Principal Planner (386) 506-5673

   A request by the applicant for approval of the Coastal Oaks Subdivision, to subdivide a ±2.2-acre property into four (4) residential lots and construct two duplexes (4 total dwelling units).

C. OTHER BUSINESS

7. Commissioner Comments
8. Staff Comments

D. PUBLIC COMMENTS

E. ADJOURNMENT

NOTICES – PURSUANT TO SECTION 286.0105 OF THE FLORIDA STATUTES, IF ANY PERSON DECIDES TO APPEAL ANY DECISION MADE BY THE PLANNING COMMISSION WITH RESPECT TO ANY MATTER CONSIDERED AT THIS PUBLIC MEETING OR HEARING, SUCH PERSON WILL NEED A RECORD OF THE PROCEEDINGS, AND THAT, FOR SUCH PURPOSE, SUCH PERSON MAY NEED TO ENSURE THAT A VERBATIM RECORD OF THE PROCEEDINGS IS MADE, WHICH RECORD INCLUDES THE TESTIMONY AND EVIDENCE UPON WHICH THE APPEAL IS TO BE BASED. THE CITY DOES NOT PREPARE OR PROVIDE SUCH A RECORD.

FOR SPECIAL ACCOMMODATIONS, PLEASE NOTIFY THE CITY CLERK'S OFFICE (PHONE: 386-506-5563) AS FAR IN ADVANCE AS POSSIBLE, BUT PREFERABLY WITHIN 2 WORKING DAYS OF YOUR RECEIPT OF THIS NOTICE OR 5 DAYS PRIOR TO THE MEETING OR HEARING DATE.

HELP FOR THE HEARING IMPAIRED IS AVAILABLE THROUGH THE ASSISTIVE LISTENING SYSTEM RECEIVERS CAN BE OBTAINED FROM THE CITY CLERKS' OFFICE.

IN ACCORDANCE WITH THE AMERICANS WITH DISABILITIES ACT (ADA), IF YOU ARE A PERSON WITH A DISABILITY WHO NEEDS AN ACCOMMODATION IN ORDER TO PARTICIPATE IN THIS PROCEEDING, YOU ARE ENTITLED, AT NO COST TO YOU, THE PROVISION OF CERTAIN ASSISTANCE. PLEASE CONTACT THE CITY CLERK FOR THE CITY OF PORT ORANGE, 1000 CITY CENTER CIRCLE, PORT ORANGE, FLORIDA 32129, TELEPHONE NUMBER 386-506-5563, CITYCLERK@PORT-ORANGE.ORG, AS FAR IN ADVANCE AS POSSIBLE, BUT PREFERABLY WITHIN 2 WORKING DAYS OF YOUR RECEIPT OF THIS NOTICE OR 5 DAYS PRIOR TO THE MEETING OR HEARING DATE. IF YOU ARE HEARING OR VOICE IMPAIRED, CONTACT THE RELAY OPERATOR AT 7-1-1 or 1-800-955-8771.

UPON REQUEST BY A QUALIFIED INDIVIDUAL WITH A DISABILITY, THIS DOCUMENT WILL BE MADE AVAILABLE IN AN ALTERNATE FORMAT. IF YOU NEED TO REQUEST THIS DOCUMENT IN AN ALTERNATE FORMAT, PLEASE CONTACT THE CITY CLERK WHOSE CONTACT INFORMATION IS PROVIDED ABOVE.

REGULAR PLANNING COMMISSION MEETING MINUTES
COUNCIL CHAMBERS – CITY HALL
1000 CITY CENTER CIRCLE
PORT ORANGE, FLORIDA
MAY 25, 2023

THE REGULAR PLANNING COMMISSION MEETING of the City of Port Orange was called to order by Chairman Lance Green at 5:30 p.m.

Pledge of Allegiance

Roll Call	Present:	Newton White John Junco Maria Mills-Benat, Vice Chair Lance Green, Chair Thomas Jordan
	Absent:	Darrel "Bo" Bofamy (excused)
	Also Present:	Shannon Balmer, Assistant City Attorney Tracee Cody, Deputy City Clerk

DISCUSSION/ACTION

3. Consideration of Minutes - April 27, 2023

Motion to approve the meeting minutes of April 27, 2023 as presented was made by Commissioner Stan Schmidt and seconded by Commissioner Maria Mills-Benat. Motion carried unanimously by voice call vote.

4. APPLICATION: MDA Amendment/Second Amendment to the Master Development Agreement for the Southwinds Center Planned Commercial Development
CASE NO.: PRZA-23-0002
APPLICANT: Shoppes at Southwinds II, LLC
STAFF CONTACT: Penelope Cruz, Planning Manager (386) 506-5671

A request by the applicant to amend the Master Development Agreement for the Southwinds Center Planned Commercial Development to add the allowed uses in the Community Commercial Zoning District as allowed uses on Lot 2 of the PCD, except for the convenience store with or without fuel operation, fleet-based service, and motor vehicle service station uses, and no more than one (1) restaurant with a drive-thru

Motion to approve Case No.: PRZA-23-0002 was made by Commissioner Maria Mills-Benat and seconded by Commissioner Thomas Jordan.

Commissioner Newton White abstained from the vote due to conflict. Chairman Lance Green read into record Form 8B Memorandum of Voting Conflict for County, Municipal, and other local public officers for Newton White abstaining.

Penelope Cruz, Planning Manager, provided details of the request.

John Trost, with SVN Alliance on behalf of the applicant, asked if Commissioners had any questions to which they had none.

Motion carried 5-0-1 by roll call vote with Commissioner Newton White abstaining.

5. APPLICATION: MDA Amendment/Fourth Amendment to the Master Development Agreement for the Woodhaven Planned Unit Development
CASE NO.: PRZA-23-0003
APPLICANT: CC Woodhaven, LLC
STAFF CONTACT: Penelope Cruz, Planning Manager (386) 5056-5671

A request by the applicant to amend the Master Development Agreement for the Woodhaven Planned Unit Development to establish a 15-foot front setback for uninhabitable improvements on a single-family home and clarify requirements on the type and height of fencing allowed on an individual residential lot.

Motion to approve Case No.: PRZA-23-0003 was made by Commissioner Stan Schmidt and seconded by Commissioner Thomas Jordan.

Ms. Cruz provided details on the request and answered questions from the Commissioners.

Dick Smith, ICI Homes, answered questions from the Commissioners regarding lot sizes, landscaping, and parking.

Robert Reinhagen, resident, commented on the "uninhabitable" language and believes it could be misconstrued. Ms. Cruz clarified the intent is to include the garage as habitable and will tweak the language before going to Council.

Motion carried 5-1 by roll call vote with Commissioner Thomas Jordan voting no.

6. APPLICATION: Development Order Modification/Final Plat for Phase II of the Woodhaven Subdivision

CASE NO.: SUBD-23-0003

APPLICANT: CC Woodhaven, LLC
STAFF CONTACT: Penelope Cruz, Planning Manager (386) 506-5671

A request by the applicant to modify the Final Plat for Phase 2 of the Woodhaven Subdivision to revise notes on the Final Plat regarding rear yard setbacks.

Motion to approve Case No.: SUBD-23-0003 was

made by Commissioner Thomas Jordan and seconded by Commissioner Newton White.

Ms. Cruz provided details of the request and answered questions from the Commissioners.

Motion carried unanimously by roll call vote.

OTHER BUSINESS

7. Commissioner Comments

Commissioner Jordan congratulated staff on the turn lane improvements and Commissioner White asked for more information and a timeline. Tim Burman, Community Development Director, answered questions regarding the turn lane improvements along Dunlawton Avenue and informed the Commissioners about the construction timeline. Mr. Burman also mentioned that Bristol Development might possibly come to the next meeting in June.

Ms. Cruz provided an update on the comprehensive plan and bringing it in front of the Planning Commission in July. Information packets will go out a few weeks prior to the meeting.

Commissioner White spoke on a Senate/House bill that passed regarding zoning.

8. Staff Comments

There were none.

PUBLIC COMMENTS

There were none.

ADJOURNMENT – 6:06 p.m.

_____
Chairman Lance Green

FORM 8B MEMORANDUM OF VOTING CONFLICT FOR COUNTY, MUNICIPAL, AND OTHER LOCAL PUBLIC OFFICERS

LAST NAME—FIRST NAME—MIDDLE NAME White Newton D.	NAME OF BOARD, COUNCIL, COMMISSION, AUTHORITY, OR COMMITTEE Planning Commission
MAILING ADDRESS 510 Renner Rd Volusia	THE BOARD, COUNCIL, COMMISSION, AUTHORITY OR COMMITTEE ON WHICH I SERVE IS A UNIT OF: ☒ CITY ☐ COUNTY ☐ OTHER LOCAL AGENCY
CITY Port Orange COUNTY	NAME OF POLITICAL SUBDIVISION:
DATE ON WHICH VOTE OCCURRED	MY POSITION IS: ☐ ELECTIVE ☒ APPOINTIVE

WHO MUST FILE FORM 8B

This form is for use by any person serving at the county, city, or other local level of government on an appointed or elected board, council, commission, authority, or committee. It applies to members of advisory and non-advisory bodies who are presented with a voting conflict of interest under Section 112.3143, Florida Statutes.

Your responsibilities under the law when faced with voting on a measure in which you have a conflict of interest will vary greatly depending on whether you hold an elective or appointive position. For this reason, please pay close attention to the instructions on this form before completing and filing the form.

INSTRUCTIONS FOR COMPLIANCE WITH SECTION 112.3143, FLORIDA STATUTES

A person holding elective or appointive county, municipal, or other local public office MUST ABSTAIN from voting on a measure which would inure to his or her special private gain or loss. Each elected or appointed local officer also MUST ABSTAIN from knowingly voting on a measure which would inure to the special gain or loss of a principal (other than a government agency) by whom he or she is retained (including the parent, subsidiary, or sibling organization of a principal by which he or she is retained); to the special private gain or loss of a relative; or to the special private gain or loss of a business associate. Commissioners of community redevelopment agencies (CRAs) under Sec. 163.356 or 163.357, F.S., and officers of independent special tax districts elected on a one-acre, one-vote basis are notprohibited from voting in that capacity.

For purposes of this law, a "relative" includes only the officer's father, mother, son, daughter, husband, wife, brother, sister, father-in-law, mother-in-law, son-in-law, and daughter-in-law. A "business associate" means any person or entity engaged in or carrying on a business enterprise with the officer as a partner, joint venturer, coowner of property, or corporate shareholder (where the shares of the corporation are not listed on any national or regional stock exchange).

* * * * * * * * * * * * * * * *

ELECTED OFFICERS:

In addition to abstaining from voting in the situations described above, you must disclose the conflict:

PRIOR TO THE VOTE BEING TAKEN by publicly stating to the assembly the nature of your interest in the measure on which you are abstaining from voting; *and*

WITHIN 15 DAYS AFTER THE VOTE OCCURS by completing and filing this form with the person responsible for recording the minutes of the meeting, who should incorporate the form in the minutes.

* * * * * * * * * * * * * * * *

APPOINTED OFFICERS:

Although you must abstain from voting in the situations described above, you are not prohibited by Section 112.3143 from otherw ise participating in these matters. However, you must disclose the nature of the conflict before making any attempt to influence the decision, whether orally or in writing and whether made by you or at your direction.

IF YOU INTEND TO MAKE ANY ATTEMPT TO INFLUENCE THE DECISION PRIOR TO THE MEETING AT WHICH THE VOTE WILL BE TAKEN:

- You must complete and file this form (before making any attempt to influence the decision) with the person responsible for recording the minutes of the meeting, who will incorporate the form in the minutes. (Continued on page 2)

APPOINTED OFFICERS (continued)

- A copy of the form must be provided immediately to the other members of the agency.
- The form must be read publicly at the next meeting after the form is filed.

IF YOU MAKE NO ATTEMPT TO INFLUENCE THE DECISION EXCEPT BY DISCUSSION AT THE MEETING:

- You must disclose orally the nature of your conflict in the measure before participating.
- You must complete the form and file it within 15 days after the vote occurs with the person responsible for recording the minutes of the meeting, who must incorporate the form in the minutes. A copy of the form must be provided immediately to the other members of the agency, and the form must be read publicly at the next meeting after the form is filed.

DISCLOSURE OF LOCAL OFFICER'S INTEREST

I, Newton White, hereby disclose that on May 25, 20 23:

(a) A measure came or will come before my agency which (check one or more)

X inured to my special private gain or loss;

X inured to the special gain or loss of my business associate, Herb Lubansky, MoonPenny Properties Inc.;

___ inured to the special gain or loss of my relative, ___,

___ inured to the special gain or loss of ___, by whom I am retained; or

___ inured to the special gain or loss of ___, which is the parent subsidiary, or sibling organization or subsidiary of a principal which has retained me.

(b) The measure before my agency and the nature of my conflicting interest in the measure is as follows:

Our brokerage represents the Perspective tennant that needs the Zoning to put their Business in the Location

If disclosure of specific information would violate confidentiality or privilege pursuant to law or rules governing attorneys, a public officer, who is also an attorney, may comply with the disclosure requirements of this section by disclosing the nature of the interest in such a way as to provide the public with notice of the conflict.

May 22, 2023
Date Filed

Signature

NOTICE: UNDER PROVISIONS OF FLORIDA STATUTES §112.317, A FAILURE TO MAKE ANY REQUIRED DISCLOSURE CONSTITUTES GROUNDS FOR AND MAY BE PUNISHED BY ONE OR MORE OF THE FOLLOWING: IMPEACHMENT, REMOVAL OR SUSPENSION FROM OFFICE OR EMPLOYMENT, DEMOTION, REDUCTION IN SALARY, REPRIMAND, OR A CIVIL PENALTY NOT TO EXCEED $10,000.

CE FORM 8B - EFF. 11/2013
Adopted by reference in Rule 34-7.010(1)(f), F.A.C.

STAFF REPORT
2023 Water Supply Work Plan Update

REQUEST:	Approval of the 2023 Water Supply Work Plan Update
APPLICANT:	City of Port Orange
STAFF CONTACT:	Penelope Cruz, Planning Manager (386) 506-5671
STAFF RECOMMENDATION:	Approval
PLANNING COMMISSION:	June 22, 2023

BACKGROUND
In 2009, the city adopted a Water Supply Work Plan along with corresponding amendments to the City's Comprehensive Plan pursuant to state statutes [Section 163.3177(6)(c)3, F.S.] that required coordination between a local government Comprehensive Plan and a water management district's regional water supply plans, to establish a closer link between development decisions and to ensure adequate water supplies are available at the time a certificate of occupancy is issued for residential or commercial use. The City of Port Orange is located within St. John's River Water Management District and is required to be in coordination with the Central Springs/East Coast Regional Water Supply Plan.

In February 2022, the St. John's River Water Management District governing board approved an update to the Central Springs/East Coast Regional Water Supply Plan. In April 2022, all local governments located in St. John's River Water Management District region were notified of this update, and according to state statutes, all local governments within this water management district are required to update their Water Supply Work Plan (WSWP) and related Comprehensive Plan policies by August 2023 to correspond with the recently updated Central Springs/East Coast Regional Water Supply Plan.

DISCUSSION
The purpose of the WSWP is to assess the existing and projected water demands, water sources, and facilities, along with the water conservation and reuse practices, necessary to meet existing and future water demands for the Port Orange water service area, which includes the City of Port Orange city limits, the City of Daytona Beach Shores south of Thames Avenue, the Town of Ponce Inlet, and unincorporated Volusia County (Figure 1 – Port Orange Water Service and Planning Area).

Figure 1. Port Orange Water Service and Planning Area

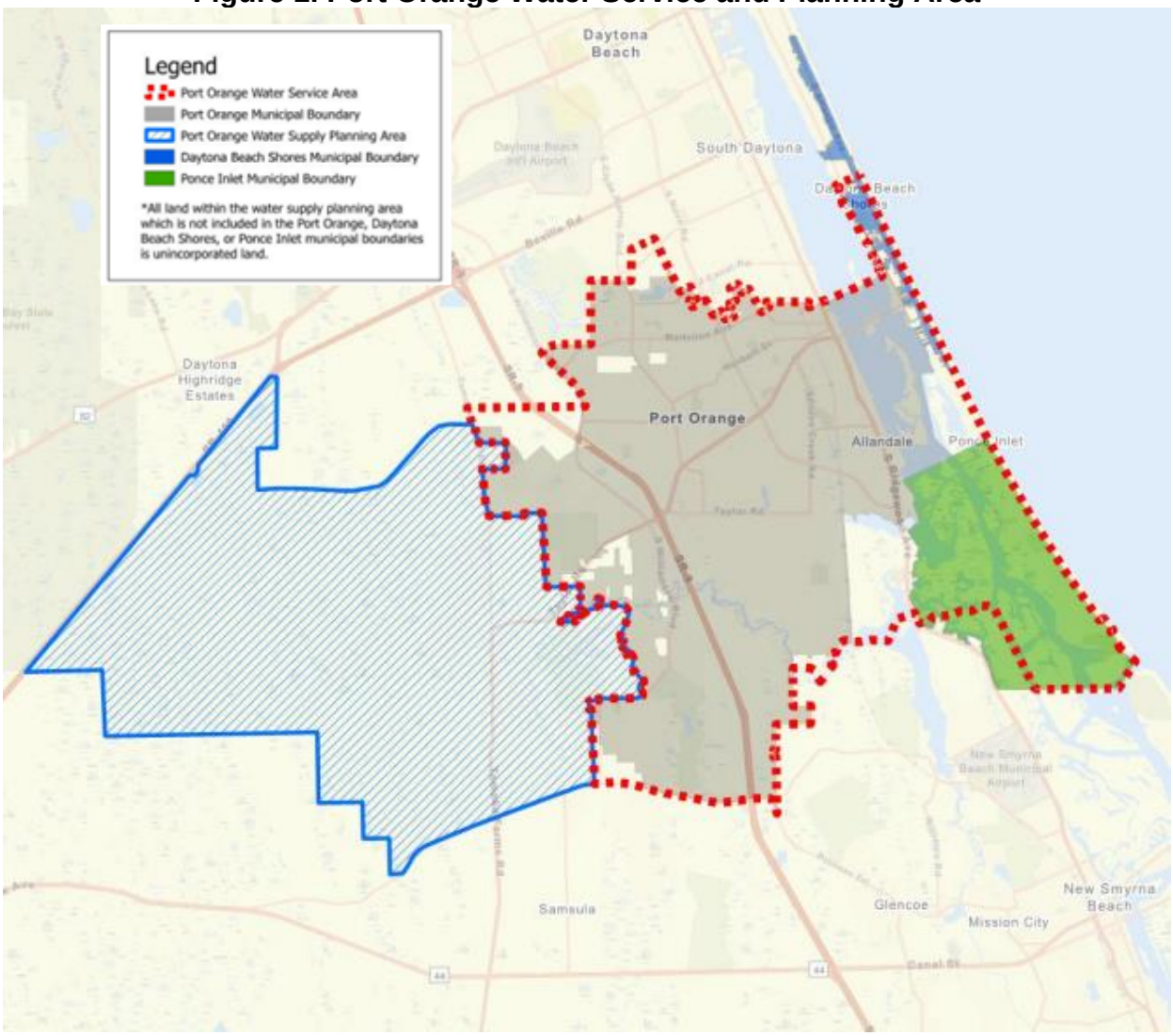

The 2023 WSWP update has been prepared by Kimley Horn and Associates, Inc. and in accordance with Florida Statutes. The City's 2023 WSWP indicates there is adequate water supply for the next 10 years to serve residents, businesses, and future development within the Port Orange water service area, while also sustaining local and regional water resources as well as natural systems. The 2023 WSWP provides an assessment of the projected water demands within the service area over the next 10 years (2023-2033) and the capacity of the Port Orange water supply, treatment and storage facilities, and distribution system to meet these demands. While the existing Port Orange water supply was found to be sufficient for meeting demands over the next 10 years as required by Florida Statutes, the recent update to the City's Consumptive Use Permit demonstrates that there is adequate water supply through 2043. Nonetheless, the city does plan to evaluate potential locations for additional water supply wells to ensure system redundancy in case existing wells are taken out of service.

An update to the City's Comprehensive Plan is currently being prepared, and findings from the 2023 WSWP will be used to update the City's Goals, Objectives, and Policies

within the plan related to water supply planning, and the 2023 WSWP will be included in the adopted Comprehensive Plan by reference as required by Florida Statutes.

RECOMMENDATION

Staff recommends approval of the 2023 Water Supply Work Plan and transmittal to the St. John's River Water Management District.

City of Port Orange
Water Supply Work Plan (2023-2033)

Prepared for:

The City of Port Orange Public Utilities Department
Volusia County, Florida

Prepared by:
Kimley-Horn and Associates, Inc.

June 2023

© Kimley-Horn and Associates, Inc. 2023

TABLE OF CONTENTS

1 EXECUTIVE SUMMARY 1

2 INTRODUCTION 2

3 BACKGROUND INFORMATION 2

4 REGIONAL ISSUES 5

4.1 St. John's River Water Management District 5

4.2 Central Springs/East Coast Regional Water Supply Plan 5

4.3 Interconnects 6

5 WATER USE PERMIT INFORMATION 6

6 EXISTING SYSTEMS 8

6.1 Production Wells 8

6.2 Water Treatment Facility 11
6.2.1 Aeration 11
6.2.2 Lime Softening and Recarbonation 11
6.2.3 Filtration 11
6.2.4 Disinfection and Fluoridation 11

6.3 Distribution System 12
6.3.1 Port Orange Service Area 12
6.3.2 Pumping and Storage Capacity 12
6.3.3 Piping Network 14

6.1 Reclaimed Water System 14

7 DATA AND ANALYSIS 15

7.1 Population Projections 15

7.2 Potable Water Level of Service Standard 16

7.3 Potable Water Demand Projections 18

8 WATER SUPPLY NEEDS AND POLICY OBJECTIVES 19

8.1 Water Supply Needs 19

8.2 Port Orange Goals, Objectives, and Policies 19
8.2.1 Comprehensive Plan – Water Supply Work Plan Adoption 19
8.2.2 Comprehensive Plan – Reclaimed Water and Water Conservation Policies 20

8.3 Additional Water Supply Goals and Policies 22
8.3.1 Land Development Code 22
8.3.2 Water Conservation Plan 22

9 CAPITAL IMPROVEMENTS 23

LIST OF FIGURES

Figure 3-1 4
Figure 6-1 9
Figure 6-2 13

LIST OF TABLES

Table 1 - Summary of MFL Water Body Rebound Requirements[1] 6
Table 2 - CUP Annual Groundwater Withdrawal Limits 7
Table 3 - Inventory of Potable Supply Wells 10
Table 4 - Potable Water Distribution Inventory (2020) 14
Table 5- Reclaimed Water System Inventory (2020) 14
Table 6 - Port Orange Population Projections 16
Table 7 - Historical Water Use 2015-2020 17
Table 8 - Port Orange Observed Level of Service 2015-2020 17
Table 9 - Port Orange Water Demand Projections 18
Table 10 – Potable Water System Capital Improvement Plan 24
Table 11 - Reclaimed Water System Capital Improvement Projects 25

(THIS PAGE INTENTIONALLY LEFT BLANK)

1 EXECUTIVE SUMMARY

In 2002, 2004, and 2005, the Florida Legislature amended the Florida Water Resources Act. This legislation amended the water supply planning requirements for all local governments and created a statutory link between the regional water supply plans (RWSPs) prepared by water management districts and comprehensive plans prepared by local governments. These legislative changes also increased the necessary level of coordination between local land use planning and regional water supply planning. The legislation requires local governments to adopt an updated Water Supply Work Plan (WSWP) within 18 months of the adoption of the Regional Water Supply Plan prepared by the water management districts. The purpose of the WSWP is to assess the existing and projected water demands, water sources, and facilities, along with the water conservation and reuse practices, necessary to meet existing and future water demands. The City of Port Orange (City) WSWP has been prepared in accordance with Section 163.3177 F.S. The WSWP can be used by the City to create an actionable strategy for meeting its future water supply needs, while maintaining its natural water resources.

The City's potable water system consists of twenty-seven (27) water supply wells, divided among the Central Recharge and Eastern wellfields. Raw water is pumped from the wellfields to the Charles B. Garnsey Water Treatment Plant where it is treated through aeration, lime-softening, filtration, and disinfection processes. A high service pump station at the treatment facility delivers water either directly to the distribution system or fills three (3) offsite ground storage tanks. Water is distributed to the City's service area, which consists of the City of Port Orange city limits, the City of Daytona Beach Shores south of Thames Avenue, the Town of Ponce Inlet, and unincorporated Volusia County. In 2021, the City provided 3.88 million gallons per day (MGD) of potable water to its customers.

The City is committed to improving the long-term resiliency of the Upper Floridan aquifer by minimizing groundwater withdrawals and developing alternative water supply sources. Over the past thirty (30) years, the City has developed a set of policies to help promote the expansion of alternative water supplies, specifically reclaimed water, and to promote water conservation. As a direct result, historical per capita use rates have declined to 55.5 gallons per capita per day (gpcpd). Based on the data and subsequent analysis defined within this WSWP, the existing ground water supply in conjunction with the reclaimed water supply will be sufficient to meet water demands over the next ten years. However, several of the existing water supply wells in the Eastern wellfields have been shown to have high chloride levels and are currently under restricted use. If in the future these wells need to be permanently removed from service due to poor water quality, the existing available water supply would be decreased. In order to ensure that the existing water supply for the City can be maintained in the future, the City is investigating potential locations for new wells. This will allow for redundancy in the case that wells from the Eastern wellfield must be taken out of service due to water quality issues.

An update to the Comprehensive Plan and to the data inventory and analysis for the City is currently in development. Findings from this WSWP will be used to inform the City's Goals, Objectives, and Policies within the plan and will be incorporated in the final Comprehensive Plan and data inventory and analysis updates by reference. Additional supply goals and policies implemented at the City include its multi-pronged Water Conservation Plan, maintaining a Land Development Code consistent with Florida Statues, and various policies for educating the public and incentivizing water conservation for the ten (10) year planning horizon. The Capital Improvement Projects (CIP) program for the potable water and reclaimed water systems, included herein, is also consistent with the City's objectives and in support of regional initiatives for developing and improving water resources.

2 INTRODUCTION

The City's Water Supply Work Plan (WSWP) demonstrates there is adequate water supply over the next 10 years to serve residents within the Port Orange utility service area, while also sustaining local and regional water resources as well as natural systems. This report provides an assessment of the projected water demands within the service area over the next 10 years (2023-2033) and the capacity of the Port Orange water supply, treatment and storage facilities, and distribution system to meet these demands. While the existing Port Orange water supply was found to be sufficient for meeting demands over the next 10 years, the City does plan to evaluate potential locations for additional water supply wells in order to ensure system redundancy in case any existing wells must be taken out of service due to high chloride levels.

The City's Water Supply Work Plan (WSWP) has been prepared in accordance with Sections 373.709 and 163.3177(6)(c)3 of the Florida Statutes. As stated in the Florida Statutes the local government is required to "adopt a water supply facilities work plan covering at least a 10-year planning period to meet existing and projected demand. The work plan must address those water supply facilities for which the local government has responsibility and include the facilities needed to develop alternative water supplies. The work plan must also identify conservation and reuse measures to meet future needs." The Water Supply Work Plan is meant to serve as a response to the Regional Water Supply Plan (RWSP) prepared by the SJRWMD and is required to be completed within 18-months of the adoption of the RWSP.

3 BACKGROUND INFORMATION

The City of Port Orange is located along the Halifax River in the eastern central portion of Volusia County. Port Orange is bordered by Daytona Beach and Daytona Beach Shores to the north, Ponce Inlet to the southeast, and New Smyrna Beach to the south. The City has a municipal area of approximately 28 square miles and a utility service area of approximately 40 square miles, providing service for several surrounding municipalities and unincorporated land. See **Figure 3-**1 for a map of the Port Orange municipal boundary and service area. Residents of the utility service area receive water, wastewater, and reclaimed water services from the City. Additional municipal services include, but are not limited to, road and parks maintenance,

stormwater management, and building inspections. These services are provided solely to residents of Port Orange. The planning area considered for the Water Supply Work Plan currently has a population of approximately 72,900 people.

Groundwater is the only potable water supply source for the City. Two aquifers are accessible to the Port Orange service area- the upper unconsolidated surficial aquifer and the lower confined limestone Floridan aquifer. The Floridan aquifer consists of the Upper Floridan aquifer and the Lower Floridan aquifer which are divided by a less productive layer referred to as the middle confining unit. The City's water supply comes exclusively from the Upper Floridan aquifer, although some private wells and irrigation systems within the service area do withdraw water from the surficial aquifer. In 2021 the City withdrew an average of 6.3 MGD from the aquifer daily. Raw water from the supply wells is sent through a thirty-inch water main to the Charles B. Garnsey Water Treatment Plant (Garnsey WTP) where it is treated to drinking water standards.

The City is committed to improving the long-term resiliency of the Upper Floridan aquifer by minimizing groundwater withdrawals and developing alternative water supply sources. At a regional scale, Port Orange is committed to working with partners to create an interconnected regional water system which will use excess stormwater, surface water, and reclaimed water to help offset future groundwater deficits. Locally, the City has pursued these goals through the construction of a robust reclaimed water system and the implementation of water conservation measures, which have allowed the City's water demands to remain significantly below its permitted groundwater withdrawal limits[1]. Based on modeled population growth, the City's water demand is expected to continue to remain below permitted withdrawal limits over the next 10 years.

[1] In 2021 average day water demand was found to be 6.34 MGD, while the permitted average day water demand for 2021 was 8.97 MGD.

FIGURE 3-1

Port Orange Water Service Area

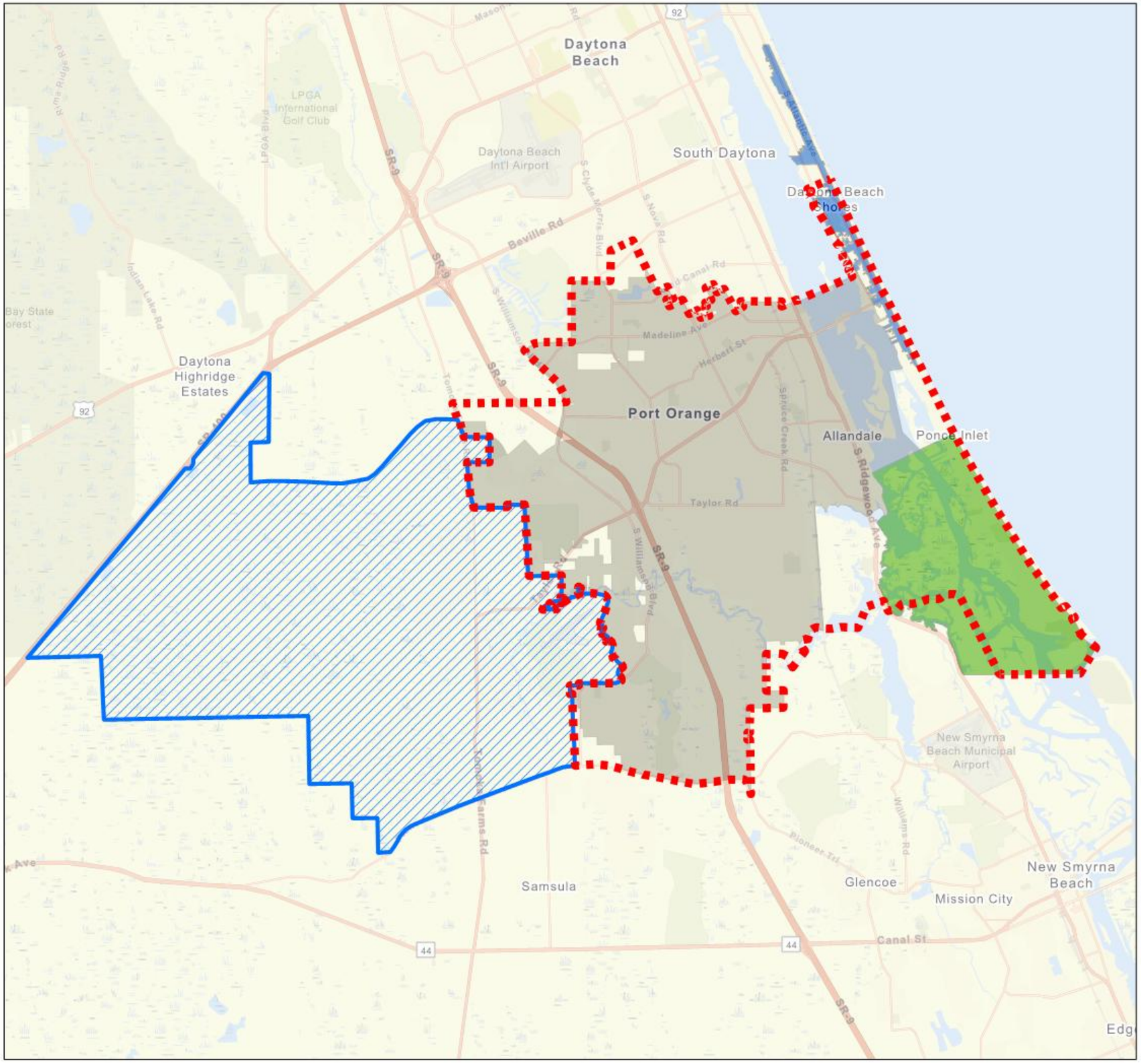

Legend

- Port Orange Water Service Area
- Port Orange Municipal Boundary
- Port Orange Water Supply Planning Area
- Daytona Beach Shores Municipal Boundary
- Ponce Inlet Municipal Boundary

*All land within the water supply planning area which is not included in the Port Orange, Daytona Beach Shores, or Ponce Inlet municipal boundaries is unincorporated land.

0 10,000 20,000 Feet

City of Port Orange

WATER SUPPLY WORK PLAN 2023

4 REGIONAL ISSUES

The Floridan Aquifer System is the predominant source of water in the region and throughout Florida. Water resources are interconnected which is why regional planning is a critical step in helping protect the Floridan Aquifer System as well as other water bodies and natural systems. The City coordinates its water supply planning with other local and regional organizations to mitigate the over withdrawal of fresh water sources and to create strategies for utilizing alternative water supply sources. The following sections describe key regional concerns that the City considered in the preparation of this water supply work plan.

4.1 ST. JOHN'S RIVER WATER MANAGEMENT DISTRICT

Under Chapter 373 of the Florida Statues, Florida water management districts are obligated to regulate the consumptive use of water within their jurisdictions. The City of Port Orange falls under the regulatory jurisdiction of the St. John's River Water Management District (SJRWMD). As part of the SJRWMD's regulation of water use, the City is required to comply with a Consumptive Use Permit (CUP), which, among other conditions, restricts the quantity of raw water that can be withdrawn from the City's wellfields on an annual average and maximum daily basis.

The entire SJRWMD area was designated as a water resource caution area (WRCA) in 1996, which signified that water resource problems were projected to develop within 20 years. The 2022 Central Springs/East Coast Regional Water Supply Plan (described below) reconfirmed this assessment. The water resource problems identified within the region include several water bodies that are predicted to fall below minimum flows and minimum water levels (MFLs) as well as locations with degrading water qualities.

4.2 CENTRAL SPRINGS/EAST COAST REGIONAL WATER SUPPLY PLAN

The Central Springs/East Coast (CSEC) area includes all or part of Volusia, Lake, Marion, Brevard, Indian River, and Okeechobee counties. The SJRWMD, local governments, public utilities, environmental advocates and other stakeholders within this region collaborated to create a Regional Water Supply Plan (RWSP), published in February of 2022. The CSEC RWSP included an assessment of the region's water resources, a projection of future population and associated water demands, and recommendations (i.e. project options) for meeting regional water supply needs while protecting regional water resources. The 2020-2040 CSEC RWSP did not identify any 'project options' for implementation by the City. The CSEC RWSP focused on a 20-year planning horizon from 2020 through 2040, utilizing 2015 as the base year.

The CSEC RWSP assessed water supply from water bodies in the SJRWMD against projected 2040 demands. This assessment shows that out of the 21 water bodies evaluated, there are four water bodies within the region that are in prevention and one in recovery; water bodies in prevention will not meet their MFLs in 2040 whereas water bodies in recovery are not currently meeting their MFLs. The SJRWMD published three (3) strategy documents over the last decade

outlining water supply and water development projects needed to ensure MFLs are met for the water bodies currently in prevention or recovery at 2040 projected water demand levels. See Table 1 for a summary of the Upper Floridan Aquifer water level rebound and flow recovery requirements needed for all water bodies to meet MFLs in 2040.

As part of the City's CUP renewal process, an Impact Analysis report was prepared by Ardaman & Associates, Inc. to review whether the City's proposed future groundwater withdrawals would negatively impact MFL water bodies. While the Port Orange water demands will result in drawdowns at the MFLs, the report found that the projected water withdrawals will either provide a reduction in drawdowns or will not exacerbate drawdown levels when compared to current permitted drawdown levels. The reduction in drawdowns is a result of the City's requested reduction in groundwater allocation in the 2023 CUP.

Table 1 - Summary of MFL Water Body Rebound Requirements[1]

	Water Body	MFL Status - 2040		Freeboard (ft) - 2015	2015 to 2040 Drawdown (ft)	UFA Rebound Needed (ft)
Lake	Butler	Prevention		0.2	0.6	0.4
	Indian	Prevention		0.3[2]	1.3	1.0
	Scoggin	Prevention		0.4	0.8	0.4
	Shaw	Prevention		0.7	1.3	0.6
Springs	**Water Body**	**MFL Status - 2040**	**MFL (cfs) - 2040**	**Recovery Needed-Current Pumping[3] (cfs)**	**Addt'l Recovery Needed[4] (cfs) – 2040**	**Total Recovery Needed (cfs)**
	Blue	Recovery	157	12.0	5.0	17.0

1. *Table recreated from CSEC RWSP, Appendix A1.*
2. *Includes benefit of the Tiger Bay weir (0.47 ft), constructed in 2016.*
3. *2011-2015 pumping average*
4. *2040 projected pump rate – 2011 to 2015 pumping average*

4.3 INTERCONNECTS

The City of Port Orange maintains potable water system interconnects with both New Smyrna and with Daytona Beach. While these interconnects have not been used to exchange water between systems for several years, the valves at the interconnects are exercised yearly and the interconnects are available for use in the future, if needed.

5 WATER USE PERMIT INFORMATION

A CUP permit renewal for the City of Port Orange was approved and fully executed on February 16th of 2023. This permit will remain in effect through 2043. If necessary, permit modifications can be requested through either a letter modification request for smaller modifications, or through submission of a new CUP individual permit application for larger modifications. See Table 2 for additional information about the 2023 CUP permit conditions.

Permit Number: 8595
Permit Issue Date: February 16, 2023
Permit Expiration Date: February 14, 2043
Granted To: City of Port Orange, 1000 City Center Cir, Daytona Beach, FL 32119

Table 2 - CUP Annual Groundwater Withdrawal Limits

Year	Permitted Annual Average Withdrawal (MGD)
2022	7.33
2023	7.33
2024	7.33
2025	7.33
2026	7.33
2027	7.33
2028	7.33
2029	7.33
2030	7.33
2031	7.33
2032	7.33
2033	7.33
2034	7.33
2035	7.33
2036	7.33
2037	7.33
2038	7.33
2039	7.33
2040	7.33
2041	7.33
2042	7.33
2043	7.33

6 EXISTING SYSTEMS

6.1 PRODUCTION WELLS

The source of the raw water used to supply the Port Orange service area is the Upper Floridian Aquifer. The City owns and operates two well fields that draw water from the aquifer- the Eastern (CM) wellfield and the Central Recharge (CR) wellfield. The CM wellfield is located within Port Orange city limits, east of Clyde Morris Boulevard and next to the Garnsey WTP. The CR wellfield is located in unincorporated land directly to the east of I-4. Volusia County retains zoning and land use control in the unincorporated area. However, the City and County signed an interlocal agreement in 2004 (updated in 2008), which allows the City to maintain control over land use, zoning, and land development within the CR wellfield area. See **Figure 6-1** for a map showing the location of the wellfields, the Port Orange municipal boundary, and the water supply planning area.

The CM wellfield was constructed in the late 1970s and contains 13 wells. These wells were rehabilitated in 2004 and most are now approaching the end of their expected useful life. There are currently 27 wells in the CR wellfield, constructed between 1987 and 2005. A rehabilitation project was completed in 2005 for the older CR wells, however these wells are also now beginning to reach the end of their expected life spans.

The CR wellfield supplies approximately 85% of the water that is treated by the Garnsey WTP and the CM wellfield supplies the remaining 15%. While the CM wellfield is still suitable for use at present, its wells have a lower water quality than the CR wells and have shown trends of increasing chloride levels. The withdrawals from the CM wells are kept to a lower level in order to mitigate water quality and to maintain a higher water quality of raw water. See Table 3 for an inventory of the City's supply wells. The City is investigating potential locations for new water supply wells in order to supplement the water supply system in the case that any CM wells need to be removed from service in the future.

The water from the Central Recharge wellfield is transported to the water treatment plant through a thirty-inch reinforced concrete pipe, which is approximately eight miles long. This water main is critical to the Port Orange water supply since it is the only pipeline connecting the Central Recharge wellfield to the WTP. The water main has a hydraulic capacity of approximately 15 MGD. However, water withdrawal is limited by the City's CUP permit. Permit conditions only allow an annual water withdrawal of 7.33 MGD with 6.22 MGD permitted to be withdrawn from the CR wellfield and 1.12 MGD permitted to be withdrawn from the CM wellfield.

FIGURE 6-1

Public Potable Water Wells, Wellfield Protection Area, & Water Supply Planning Area

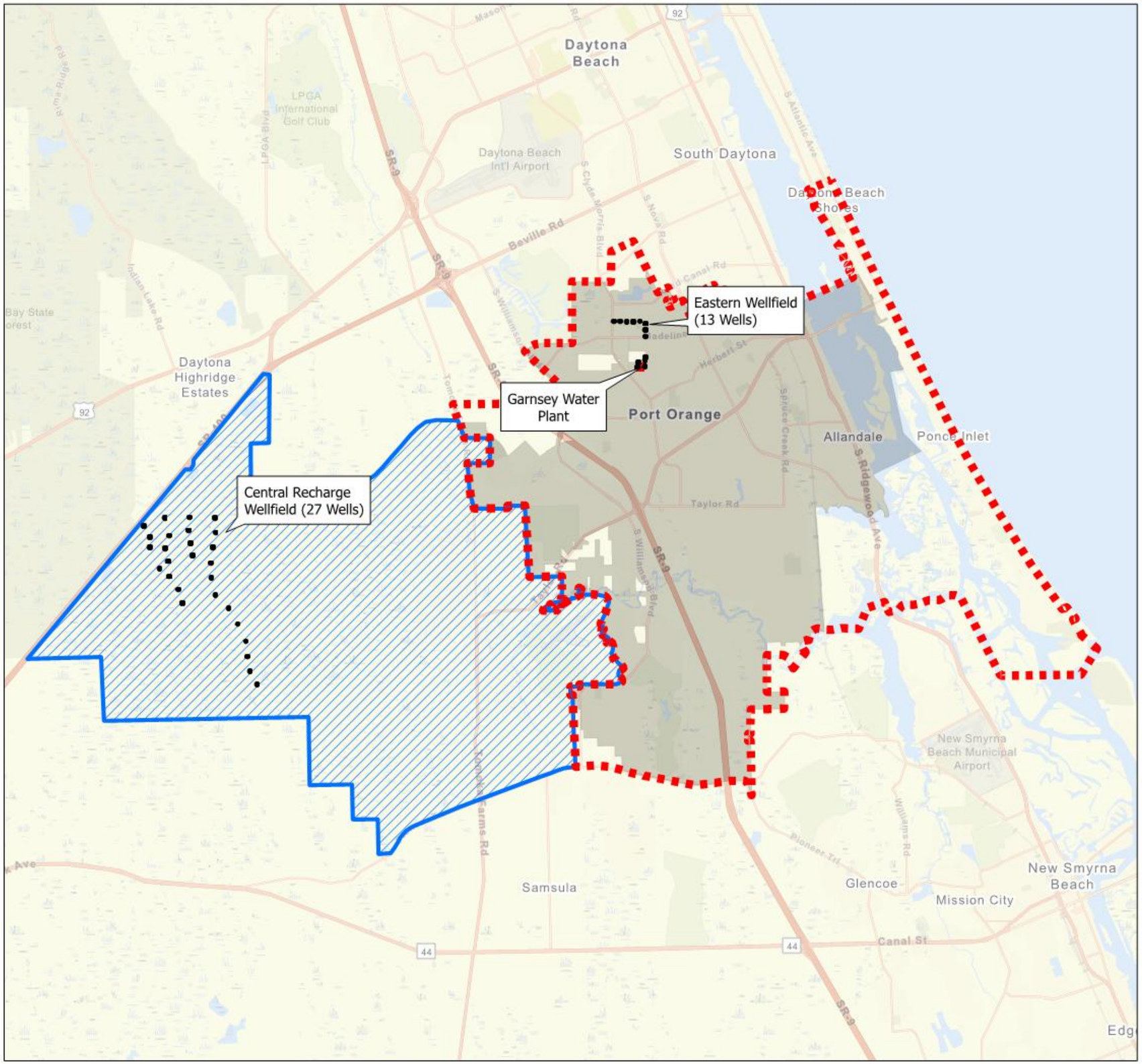

Legend

- Wells
- Port Orange Municipal Boundary
- Port Orange Water Service Area
- Port Orange Water Supply Planning Area

0 10,000 20,000 Feet

City of Port Orange

WATER SUPPLY WORK PLAN 2023

Table 3 - Inventory of Potable Supply Wells

Well No.	Casing Diameter	Well Depth	Cased Depth	Quantity Produced	Date of Most Recent Rehab	Expected Life Span
CR-1	16”	350’	100’	450 GPM	FY 2005	15
CR-2	16”	350’	98’	450 GPM	FY 2005	15
CR-3	16”	350’	98’	450 GPM	FY 2005	15
CR-4	16”	350’	95’	450 GPM	FY 2005	15
CR-5	16”	350’	91’	450 GPM	FY 2005	15
CR-6	16”	350’	140’	350 GPM	FY 2005	15
CR-7	16”	350’	133’	450 GPM	FY 2005	15
CR-8	16”	350’	96’	450 GPM	FY 2005	15
CR-9	16”	350’	94’	450 GPM	FY 2005	15
CR-10	16”	350’	91’	450 GPM	FY 2005	15
CR-11	16”	300’	90’	350 GPM	FY 2005	15
CR-12	16”	250’	90’	450 GPM	FY 2005	15
CR-13	16”	300’	88’	450 GPM	FY 2005	15
CR-14	16”	350’	87’	450 GPM	FY 2005	15
CR-15	16”	350’	86’	450 GPM	FY 2005	15
CR-16	16”	300’	86’	450 GPM	FY 2005	15
CR-17	16”	300’	85’	450 GPM	FY 2005	15
CR-18	16”	300’	84’	450 GPM	FY 2005	15
CR-19	16”	300’	86’	450 GPM	FY 2005	15
CR-20	16”	370’	87’	450 GPM	FY 2005	15
CR-21	16”	370’	87’	450 GPM	FY 2005	15
CR-22	10”	300’	145’	450 GPM	FY 2005	15
CR-23	16”	300’	130’	450 GPM	FY 2005	15
CR-24	16”	300’	130’	350 GPM	FY 2005	15
CR-25	16”	300’	130’	350 GPM	FY 2005	15
CR-26	16”	300’	130’	350 GPM	FY 2005	15
CR-27	16”	300’	130’	350 GPM	FY 2005	15
CM-4	8”	142’	108’	350 GPM	FY 2004	15
CM-5	8”	160’	117’	350 GPM	FY 2004	15
CM-6	8”	160’	119’	350 GPM	FY 2004	15
CM-7	8”	160’	113’	350 GPM	FY 2004	15
CM-8	8”	160’	108’	350 GPM	FY 2004	15
CM-9	10”	200’	111’	350 GPM	FY 2004	15
CM-10	10”	200’	111’	350 GPM	FY 2004	15
CM-11	10”	200’	110’	350 GPM	FY 2004	15
CM-12	10”	200’	111’	350 GPM	FY 2004	15
CM-13	10”	200’	111’	350 GPM	FY 2004	15
CM-14	10”	200’	111’	350 GPM	FY 2004	15
CM-15	10”	200’	110’	350 GPM	FY 2004	15
CM-16	10”	200’	109’	350 GPM	FY 2004	15

6.2 WATER TREATMENT FACILITY

The water withdrawn from the Port Orange production wells is transported to the Garnsey WTP, located at 4400 Wellfield Dr, Port Orange, FL 32129, for treatment. Raw water entering the treatment plant is sent through one of three parallel process trains each rated for 5.0 MGD. The process trains consist of aeration, lime softening and recarbonation, filtration, fluoridation, and disinfection. Cross connections between the process trains allow for bypassing during periods when a unit is out of service, providing system redundancy. The WTP has a total capacity of 15 MGD.

6.2.1 AERATION

To begin the treatment process, raw water from the wells is first aerated in order to remove dissolved gases from the water and transfer them into the air that is being introduced to the system. Concentrations of carbon dioxide, hydrogen sulfide, and volatile organic compounds are all reduced during the aeration process.

6.2.2 LIME SOFTENING AND RECARBONATION

Once aeration is completed, lime is added to the water to reduce hardness. Lime softening works by raising the water's pH, which allows the chemical precipitation of cationic compounds, such as calcium, from the water. The Garnsey WTP reduces total hardness by approximately 200 mg/L.

Once the water hardness has been reduced to an appropriate level, the pH must be lowered again to stabilize the water and prevent the carbonate scaling on piping and equipment. Carbon dioxide gas is added to the water, combining with any unprecipitated calcium carbonate to form soluble sodium bicarbonate and lowering the pH.

6.2.3 FILTRATION

The filtration system is used to remove the contaminants and suspended materials that remain in the water after aeration and softening. Granular filter media is used for the filtration process. The water passes through gravel, sand, and anthracite, moving through the coarser media first to remove larger suspended materials that might clog the finer sections of the filter. The gravel and sand remove suspended solids by physically capturing them within the filter bed, while the anthracite's adsorptive properties are used to remove biological and chemical contaminants.

6.2.4 DISINFECTION AND FLUORIDATION

The WTP utilizes sodium hypochlorite and ammonia sulfate to disinfect the treated water. When combined, these two chemicals form a chloramine residual, which produces fewer trihalomethanes than the chlorine gas that had previously been used for disinfection. The use of chloramines has allowed the City to remain in compliance with the Safe Drinking Water Act, maintaining trihalomethane levels below 35 ppb over the past 5-years.

Fluoride is also added to the treated water to provide dental protection to all water users. The optimum fluoride concentration for the finished water is 0.7 ppm.

6.3 DISTRIBUTION SYSTEM

6.3.1 PORT ORANGE SERVICE AREA

The City of Port Orange Public Utilities service area includes the following entities, for which it is the retail supplier: City of Port Orange, City of Daytona Beach Shores (south of Thames Avenue), and other non-designated unincorporated areas. The City owns and operates the distribution system and maintains individual meters for all customers. The City is also a wholesale supplier for the Town of Ponce Inlet. Water distribution to the Town of Ponce Inlet is monitored through the use of three (3) master meters. **Figure 3-1** on page 3 of this document illustrates the extents of the Port Orange water supply service area and each of the entities served.

6.3.2 PUMPING AND STORAGE CAPACITY

Treated water is distributed to the service area through the use of a high service pump station (HSPS) located at the Garnsey WTP. The HSPS consists of four (4) high-service fixed-speed pumps, rated for 250 HP, and two (2) variable-speed pumps rated for 125 HP and 100 HP, respectively. The HSPS has a capacity of 25 million gallons (MG) and delivers water at a pressure of approximately 60-70 psi. During average day water demand conditions, the HSPS supplies the entire service area. The water supply is supplemented with water from off-site ground storage tanks during periods of peak demand in the mid-morning and late afternoon or during periods when fire flow is needed. Once the peak demand conditions subside, the tanks are refilled to normal operating levels.

There are three (3) remote ground storage tanks that are used within the service area: Cypress Head (2.0 MG), Oceans (1.5 MG), and Peninsula (1.0 MG). The Cypress Head storage tank is used to provide supplemental flow to the growth corridor along Williamson Boulevard. The Oceans and Peninsula storage tanks are employed to meet demands for Ponce Inlet and Daytona Beach Shores. See **Figure 6-2** for the locations of the ground storage tanks.

FIGURE 6-2

Port Orange Ground Storage Tanks

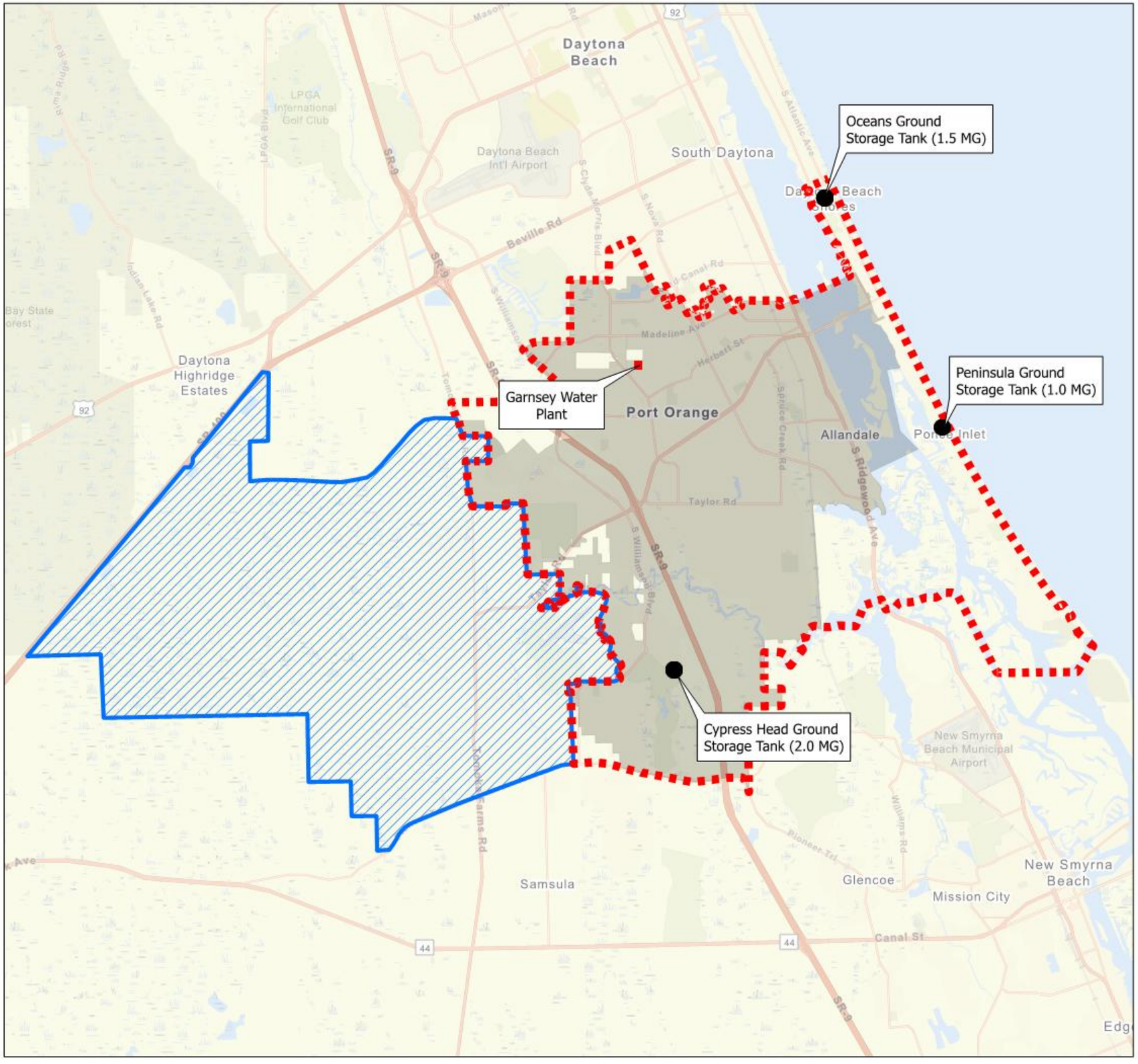

Legend

- Storage Tank
- Garnsey Water Plant
- Port Orange Municipal Boundary
- Port Orange Water Service Area
- Port Orange Water Supply Planning Area

0 10,000 20,000 Feet

City of Port Orange

WATER SUPPLY WORK PLAN 2023

6.3.3 PIPING NETWORK

The water transmission mains immediately leaving the Garnsey WTP vary in size from 12-inches to 24-inches. The distribution mains are looped throughout the system to ensure appropriate flows and pressures. Looping also limits water age and helps maintain water quality in the distribution system. The water pipes within the service area vary in size from 1-1/2-inches to 24-inches in diameter. An inventory of the pipes within the distribution network is included in Table 4.

Table 4 - Potable Water Distribution Inventory (2020)

Size (in)	Length (ft)	Size (in)	Length (ft)
Unk.	26,650	12	348,810
1	7,483	16	83,119
2	198,210	18	19,044
3	1,394	20	4,835
4	55,271	24	10,369
6	850,929	30	42,332
8	543,937	36	395
10	176,530	**TOTAL**	**2,369,400**

6.1 RECLAIMED WATER SYSTEM

In 1986 the City conducted a pilot reuse program to deliver reclaimed water to the City Center Municipal Complex. Since then, the City has aggressively pursued the use of reclaimed water to supplement and/or replace the use of potable water for irrigation. Today the City's reclaimed water system includes three (3) 3 MG storage tanks, transfer and HSPS, over 125 miles of piping, and two (2) aquifer recharge reservoirs with a combined area of 175-acres. The aquifer recharge reservoirs were completed in 2016. They are used to address seasonal reclaimed water demand variations, recharge the aquifer, and reduce wastewater discharge to the Halifax River. The reclaimed water system serves approximately 8,000 customers and, over the past five (5) years, reclaimed water system average daily demands have ranged between 4.4 and 7.7 MGD. See Table 5 for an inventory of reclaimed water distribution system piping throughout the service area.

Table 5- Reclaimed Water System Inventory (2020)

Size (in)	Length (ft)	Size (in)	Length (ft)
2	11,121	12	71,409
3	2,113	14	7,827
4	112,637	16	44,269
6	155,4865	18	17,670
8	158,637	20	27,204
10	44,189	24	32,615
		TOTAL	**685,177**

7 DATA AND ANALYSIS

As part of the Water Supply Work Plan, the City is required to provide an analysis of the data that is used to project future water facility needs. Future water facility capacity requirements are based on future demand projections, which are in turn calculated using population growth projections and level of service standards. The purpose of this section is to outline the methodologies used to determine future population growth and level of service standards and to present future potable water demand projections for the City of Port Orange service area.

7.1 POPULATION PROJECTIONS

Population and demand projections were recently approved by the SJRWMD in conjunction with the renewal of the Port Orange CUP on February 16th, 2023. However, the CUP population projections were initially prepared in early 2021 before the release of the 2020 Census data. To keep the population projections accurate to the most recently available data, the population projections from the CUP have been updated to account for the new Census data. The population projections outlined in this section incorporate data from the 2020 Census and match the population projections prepared as part of the City's master planning efforts for the 2023 Comprehensive Plan update.

The year 2020 was used as the base year for future population projections based on the data from the 2020 Census. Data for 2021 and 2022 were taken from historical BEBR population data. BEBR Medium Growth projections from April 2022 for Volusia County were used to predict population growth from 2023 through 2033. Since BEBR Medium Growth projections only provide countywide estimates, it was necessary to establish a correlation between the City's population and the Volusia County population. Census data from 2000, 2010, and 2020 was used to find the average ratio between the City's population and Volusia County's population. Based on this data, Port Orange was found to account for 11.2% of the countywide population. It was assumed that the percentage of Volusia County population for the City would remain consistent between 2020 and 2035. The population projections for Port Orange were therefore assumed to be equivalent to 11.2% of the Volusia County BEBR Medium Growth projections. Since BEBR growth projections are only calculated on increments of five years, population projections for the years between each BEBR projection were determined through linear interpolation.

Since Port Orange is a retail and wholesale water supplier, the population projections also must include the populations of the jurisdictions served by Port Orange, which include the City of Daytona Beach Shores (south of Thames Avenue), Town of Ponce Inlet (wholesale supplier), and unincorporated lands. Population projections were prepared for the City of Daytona Beach Shores and the Town of Ponce Inlet using the same methodology as the population projections for Port Orange. The population projections for Daytona Beach Shores and Ponce Inlet were then added to Port Orange's population to determine the overall service area population. Population projections for the service area are provided in Table 6.

Table 6 - Port Orange Population Projections

Year	Volusia County Population	Port Orange Population (Excl. PI & DBS)	Ponce Inlet Population	Daytona Beach Shores Population	Service Area Population
2020[1]	**553,543**	62,596	3,364	5,179	71,139
2021[2]	**563,358**	63,275	3,382	5,253	71,910
2022[2]	**572,815**	64,230	3,391	5,279	72,900
2023[3]	**579,249**	64,876	3,520	5,420	73,816
2024[3]	**585,683**	65,596	3,559	5,480	74,636
2025[4]	**592,117**	66,317	3,598	5,540	75,455
2026[5]	**597,705**	66,943	3,632	5,592	76,168
2027[5]	**603,293**	67,569	3,666	5,644	76,880
2028[5]	**608,881**	68,195	3,700	5,697	77,592
2029[5]	**614,469**	68,821	3,734	5,749	78,304
2030[4]	**620,057**	69,446	3,768	5,801	79,016
2031[6]	**624,354**	69,928	3,794	5,842	79,563
2032[6]	**628,651**	70,409	3,820	5,882	80,111
2033[6]	**632,948**	70,890	3,847	5,922	80,659

1. *2020 Census Data*
2. *Historical BEBR Data*
3. *Linear interpolation between 2022 Census Data and 2025 BEBR projections*
4. *BEBR Medium Growth projections*
5. *Linear interpolation between 2025 BEBR projections and 2030 BEBR projections*
6. *Linear interpolation between 2030 BEBR projections and 2035 BEBR projections*

7.2 POTABLE WATER LEVEL OF SERVICE STANDARD

Residential water use data shows that, from 2015-2020, the yearly average for per capita daily water use was 55.5 gallons per capita per day (gpcd). To determine this value, residential water demands from 2015-2020 were divided by the total residential population for each respective year. Based on data from the 2016 Port Orange water audit, residential water usage was found to be equivalent to 61.3% of total water usage on average. EN-50 records of total water usage for 2015-2020 were multiplied by 61.3% to calculate residential water usage over the time period. Population data for the service area was taken from historic BEBR population estimates from 2015-2020. Historic per capita water use is shown in Table 7.

Table 7 - Historical Water Use 2015-2020

Year	Port Orange Population	Ponce Inlet Population	Daytona Beach Shores Population	Residential Population Served	Residential Water Use, Average Day (MGD)	Uniform Residential per Capita Use[3] (gpcd)
2015	58,656	3,047	4,263	65,966	3.638[1]	56
2016	59,315	3,062	4,291	66,668	3.718	56
2017	59,625	3,084	4,288	66,997	3.496	53
2018	61,009	3,111	4,294	68,414	3.596	53
2019	61,617	3,151	4,372	69,140	4.005	58
2020	62,596	3,364	5,179	71,139	4.018	57
					Average	**55.5**

1. Water Use taken directly from New Water Audit.

BEBR data shows that the average household size in Volusia County has remained consistent at 2.31 persons/household from 2010-2020. Applying the per capita use rate of 55.5 gpcpd to the occupancy rate of 2.31 persons/household results in a level of service (LOS) of 128 GPD, however, this does not account for recreation/landscape water demands, known system losses, and unknown system losses since these water use categories do not have their own LOS standards. The observed Level of Service per residential unit within the service area is summarized in Table 8 below. In the Port Orange Comprehensive Plan, the listed level of service for potable water is 180 GPD per equivalent residential unit and 1/10 gallon per square foot per day for industrial and commercial development (PWSE Policy 1.2 and CIE Policy 1.4.1)[2]. Although the observed level of service demanded is approximately 20 GPD lower than the stated level of service standard, the City requests to retain its current 180 GPD standard to account for any future year to year fluctuations, (e.g. the higher observed historic per capita use in 2019).

Table 8 - Port Orange Observed Level of Service 2015-2020

Year	Total Water Demand Average Day (MGD)	Water Use Average Day[1] (Excl. Commercial/Industrial) (MGD)	Service Connections[3]	Observed Level of Service[4] (GPUD)
2015	5.87	4.53[2]	28,557	158
2016	6.07	4.71	28,861	163
2017	5.70	4.43	29,003	153
2018	5.87	4.56	29,616	154
2019	6.53	5.07	29,931	170
2020	6.55	5.09	30,796	165
Average Water Usage				161

1. Includes the following water uses: Residential, irrigation, known losses, unaccounted for losses. In total this accounts for 77.67% of total water demand in the service area.
2. Water Use taken directly from New Water Audit.
3. Calculated as Service Connections = Residential Population Served / 2.31 persons per household
4. Calculated as GPUD = Water Use Avg. Day / Service Connections. Values rounded up to nearest whole number

[2] Policy numbers are based on City of Port Orange 2010-2025 Comprehensive Plan.

Per capita water usage has decreased within the service area over the past 25 years largely due to the expansion of the City's reclaimed water system and City conservation efforts. Given the current trends, the 2015-2020 historic water use rate is recommended as a better indicator for water demand projections. The future water demand projections discussed for the following sections of this WSWP are all based on a usage rate of 55.5 gpcd rather than the City's current level of service of 180 GPD per household.

7.3 POTABLE WATER DEMAND PROJECTIONS

Residential potable water demand projections were prepared by multiplying the projected service area population by the usage rate of 55.5 gpcd, calculated in Section 7.3. The Port Orange water audit, prepared in 2016, shows how water demand is distributed between the following categories: residential use, industrial/commercial use, recreation/landscape irrigation, known system losses (water quality flushing, main breaks, firefighting, hydrant maintenance, etc.), and unknown system losses. The data from 2012-2015 shows that, of the total water usage in the service area, 61.30% was residential, 22.33% was industrial/commercial, 3.93% was for irrigation, 3.03% was due to known system losses, and the remaining 9.41% was unaccounted for. To determine total water demands over the next ten (10) years, it was assumed that water use across the five (5) audit categories would be consistent with years 2012-2015. Therefore, the projected residential water use was divided by 61.3% to determine the total projected water use. The total projected water use was then split between the remaining four audit categories. See Table 9 below for future total demand projections, as well as projections within each water use category.

Table 9 - Port Orange Water Demand Projections

Year	Residential Water Use (MGD)	Commercial/ Industrial Water Use (MGD)	Recreation/ Irrigation (MGD)	Known System Losses (MGD)	Unknown System Losses (MGD)	Total Water Demand (MGD)
2020	4.02	1.46	0.26	0.026	0.79	6.55
2021	3.99	1.45	0.26	0.026	0.78	6.51
2022	4.05	1.47	0.26	0.026	0.79	6.60
2023	4.10	1.49	0.26	0.026	0.80	6.68
2024	4.14	1.51	0.27	0.027	0.81	6.76
2025	4.19	1.53	0.27	0.027	0.82	6.83
2026	4.23	1.54	0.27	0.027	0.83	6.90
2027	4.27	1.55	0.27	0.027	0.84	6.96
2028	4.31	1.57	0.28	0.028	0.85	7.03
2029	4.35	1.58	0.28	0.028	0.85	7.09
2030	4.39	1.60	0.28	0.028	0.86	7.15
2031	4.42	1.61	0.28	0.028	0.87	7.20
2032	4.45	1.62	0.29	0.029	0.87	7.25
2033	4.48	1.63	0.29	0.029	0.88	7.30

8 WATER SUPPLY NEEDS AND POLICY OBJECTIVES

Over the past thirty (30) years, the City of Port Orange has developed a set of policies to help promote the expansion of alternative water supplies, specifically reclaimed water, and to promote water conservation. These policies are reassessed and updated at regular intervals and have proven successful in helping the City decrease future water supply needs. This is clearly shown in the 2023 CUP, which has a lower requested water allocation than the 2002 CUP despite population growth within the service area. This section outlines the City's future water supply needs and the goals, objectives, and policies that will allow the City to meet these future needs, while protecting natural water resources.

8.1 WATER SUPPLY NEEDS

Currently no groundwater deficit has been identified for Port Orange through 2033. Based on the City's expected population growth and water use trends, the existing ground water supply in conjunction with the reclaimed water supply will be sufficient to meet water demands over the next ten (10) years. The groundwater modeling report completed by Ardaman & Associates, Inc. in May 2022 also confirmed that the City's water use is not expected to have significant impacts on nearby water bodies, however, there are four (4) regional water bodies that are currently in either in prevention or recovery that may be affected by regional water use rates. As shown by the potable water demand projections, by 2033, 1.17 MGD of water is currently projected to either be used for irrigation or anticipated to be an unknown system loss. These two (2) use categories represent potential areas of opportunity for the City to reduce potable water demand through both water conservation and reclaimed water use. The City is committed to continue to implement policies to reduce its potable water demands to help offset groundwater deficits.

8.2 PORT ORANGE GOALS, OBJECTIVES, AND POLICIES

The City of Port Orange outlines Goals, Objectives, and Policies in its Comprehensive Plan. Currently, the City of Port Orange 2010-2025 Comprehensive Plan is in effect. However, the City is expected to adopt the Port Orange Comprehensive Plan 2045 by the end of 2023. This section summarizes the water and reclaimed water policies included in the proposed Port Orange Comprehensive Plan 2045.

8.2.1 COMPREHENSIVE PLAN – WATER SUPPLY WORK PLAN ADOPTION

The City of Port Orange Water Supply Work Plan 2023-2033 will be incorporated into the Comprehensive Plan by reference. The policies listed on the following page are proposed for the Port Orange Comprehensive Plan 2045 in order to incorporate the Water Supply Work Plan by reference.

The following policies are proposed to be added into the Potable Water Sub-element of the Public Facilities Element as part of the Comprehensive Plan Update:

Policy 4.1.10: The City of Port Orange Water Supply Work Plan 2023-2033 (Kimley-Horn and Associates, Inc., May 2023) is incorporated into the Comprehensive Plan by reference.

Policy 4.1.11: The City shall maintain a Water Supply Work Plan (WSWP) that is coordinated with SJRWMD's Central Springs / East Coast Regional Water Supply Plan (CSEC RWSP). The WSWP and related Comprehensive Plan policies will be updated, as necessary, within 18 months of an update of the CSEC RWSP that affects the City.

Policy 4.1.12: The Water Supply Work Plan shall identify the traditional and alternative water supply sources and projects, along with the water conservation and reuse practices, necessary to meet existing and future water demands.

The following policy is proposed to be deleted and replaced in the Intergovernmental Coordination Element as part of the Comprehensive Plan Update:

DELETED:
Policy 1.2.4: The City will maintain a Water Supply Facilities Work Plan that is coordinated with SJRWMD District Water Supply Plan, by updating the City's Work Plan within 18 months of an update to the SJRWMD's Plan that affects the City.

REPLACEMENT:
Policy 1.4.8: The City will participate in the development of updates to SJRWMD's Water Supply Assessment and Regional Water Supply Plan and in other water supply development-related initiatives facilitated by SJRWMD that affect the City.

8.2.2 COMPREHENSIVE PLAN – RECLAIMED WATER AND WATER CONSERVATION POLICIES

The use of reclaimed water for irrigation has helped to keep potable water demands within the service area mostly stable over the past 20 years despite population increases of nearly 13,217 people since the previous WSWP update. The City implements reclaimed water and water conservation and practices through policies enumerated in the Port Orange Comprehensive Plan. A selection of the City's reclaimed water and water conservation practices from the Comprehensive Plan are outlined on the following page. Please note that listed policy numbers are based on City of Port Orange 2010-2025 Comprehensive Plan.

- Installation and expansion of the reclaimed water system
    - Conservation Element
        - Policy 1.2.2, 1.4.2, and 1.4.3
    - Public Facilities Element
        - Sanitary Sewer Sub-Element
            - Policy 3.1
        - Potable Water Sub-Element
            - Policy 3.7
- Requiring new subdivisions to provide alternative sources for irrigation and non-residential development to connect to the reclaimed system.
    - Public Facilities Element
        - Sanitary Sewer Sub-Element
            - Policy 3.2
        - Potable Water Sub-Element
            - Policy 3.8
- Coordination with SJRWMD during declared water emergencies
    - Conservation Element
        - Policy 1.4.4
- Discouraging over-watering
    - Conservation Element
        - Policy 1.4.5
- Incorporating Florida Friendly landscaping
    - Conservation Element
        - Policy 1.6.6
    - Public Facilities Element
        - Potable Water Sub-Element
            - Policy 3.10
- Requiring low volume plumbing fixtures
    - Public Facilities Element
        - Potable Water Sub-Element
            - Policy 3.3
- Implementation of a conservation rate structure
    - Public Facilities Element
        - Potable Water Sub-Element
            - Policy 3.9

8.3 ADDITIONAL WATER SUPPLY GOALS AND POLICIES

8.3.1 LAND DEVELOPMENT CODE

In addition to the above identified water conservation and reuse practices, the City also enumerates requirements for reclaimed water use in the Land Development Code. A selection of Land Development Code requirements relating to reclaimed water use is included below.

Port Orange Land Development Code, Chapter 13, Sec. 7(b)

"(3) *Reclaimed water.*

(a) Landscape irrigation systems shall be required to connect to reclaimed water lines if the city has made reclaimed water available to the property and planned for its connection. The use of reclaimed water shall be required.

(b) Landscape irrigation systems shall be designed for ultimate connection to proposed reclaimed water lines where it is determined that the property is planned for ultimate connection to the reclaimed water system."

8.3.2 WATER CONSERVATION PLAN

The City of Port Orange applies a multi-pronged approach to water conservation within its service area. The five (5) main areas of focus for the City's water conservation policy are Public Education, Outdoor Water Use Reduction, Indoor Water Use Reduction, a Conservation Oriented Rate Structure, and a Leak Detection program. Specific policies associated with each focus area are included below.

- Public Information and Education Program
  - Online Materials
  - Brochures
  - Presentations
  - School Curriculum
- Outdoor Water Use Reduction Program
  - Restricted Use of Irrigation Water
  - Promotion of Florida Friendly Landscaping
- Conservation Oriented Rate Structure
- Indoor Water Use Conservation Program
  - Water Restrictive Plumbing Requirements
  - AquaHawk Water Use Monitoring Software

The City's water conservation plan also outlines a set of actionable goals that complement the policy focus areas listed above. The City seeks to pursue the following goals over the next ten (10) years:

(a) For the City of Port Orange to continue to improve its public information and education program.
(b) For the City of Port Orange to continue to aggressively pursue the use of reclaimed water to supplement and/or replace potable water used for irrigation purposes.
(c) For the City of Port Orange to record system flushing in order to monitor all water usage in the system.
(d) For the City of Port Orange to evaluate leak detection technology to ensure that water is being used efficiently.

9 CAPITAL IMPROVEMENTS

In addition to City wide policy goals, as part of their master planning, the City has also identified key water supply projects that will help ensure that future water supply needs are met. The proposed Capital Improvement Projects (CIPs) will support a variety of objectives including water treatment plant rehabilitation, rehabilitating and/or replacing water mains near the end of their service life, replacement of wells with poor water quality, water system extension, and increasing the available capacity of reclaimed water storage, among others.

Table 10 summarizes the City's current five (5) year CIP for the potable water system, which will help to ensure that the City's traditional, groundwater supply will continue to meet future water supply needs. Table 11 summarizes the City's current five (5) year CIP for the reclaimed water system, which will support the City's alternative water supply goals.

Table 10 – Potable Water System Capital Improvement Plan

Project	Prior Years Funding	FY22	FY23	FY24	FY25	FY26	FY27	Total
Production Well Replacement	25,000	-	250,000	250,000	250,000	250,000	250,000	**1,275,000**
Field Operations – Water System Replacements	6,712,000	2,000,000	600,000	400,000	400,000	500,000	500,000	**11,112,000**
Engineering – Water System Extensions/ Upsizing	870,000	-	50,000	50,000	50,000	50,000	50,000	**1,120,000**
WTP – Telemetry Instrument/Control System	725,000	25,000	25,000	25,000	25,000	25,000	25,000	**875,000**
WTP R&R - Equipment	800,000	100,000	125,000	150,000	200,000	200,000	250,000	**1,825,000**
WTP – 1 MG Water Storage Tank	300,000	-	-	1,500,000	-	-	-	**1,800,000**
WTP Softener Repl.	145,000	-	-	-	-	-	-	**145,000**
WTP – Raw Water Main Replacement	300,000	-	3,000,000	-	-	-	-	**3,300,000**
City Wide Class Pipe Replacement	180,000	580,000	-	1,060,000	1,165,000	715,000	650,000	**4,350,000**
Ridgewood Ave. WM Replacement	700,000	-	90,000	900,000	90,000	900,000	-	**2,680,000**
WM Replacement Prior to Public Works Improvements	100,000	30,000	30,000	30,000	30,000	30,000	30,000	**280,000**
Water System Rehab – 16" Water Main Replacement	180,000	2,000,000	-	-	-	-	-	**2,180,000**
Engineering – City Cost Participation*	2,970,000	-	50,000	50,000	50,000	50,000	50,000	**3,220,000**
Generator Repl.*	1,700,000	1,550,000	100,000	200,000	1,000,000	200,000	200,000	**4,950,000**
Engr – Utility Coordination and Relocation*	250,000	-	25,000	25,000	25,000	25,000	-	**350,000**
Engr – Taylor Rd. Improvements*	-	-	-	-	-	-	1,600,000	**1,600,000**
Field Operations – New Facility*	3,800,000	1,000,000	-	-	-	-	-	**4,800,000**
Emergency Utility Repairs*	100,000	250,000	250,000	250,000	250,000	250,000	250,000	**1,600,000**
Vehicle Replacement*	-	322,000	242,000	-	768,000	497,000	54,000	**1,883,000**
Total	**19,857,000**	**7,857,000**	**4,837,000**	**4,890,000**	**4,303,000**	**3,692,000**	**3,909,000**	**49,345,000**

* Joint water and sewer projects.

Table 11 - Reclaimed Water System Capital Improvement Projects

Project	Prior Years Funding	FY22	FY23	FY24	FY25	FY26	FY27	Total
WRF – Telemetry Instrument/ Control Systems	1,270,000	100,000	160,000	190,000	190,000	190,000	190,000	**2,290,000**
WRF – R&R	1,450,000	800,000	600,000	500,000	500,000	550,000	550,000	**4,950,000**
WRF Electric System R&R	2,250,000	500,000	-	-	-	-	-	**2,750,000**
WRF Operations Building Expansion	410,000	-	-	-	100,000	500,000	-	**1,010,000**
WRF Nutrient Removal Process Improvements	500,000	-	-	-	6,000,000	-	-	**6,500,000**
WRF – Water Reuse Program	300,000	-	-	-	-	3,000,000	-	**3,300,000**
WRF – Replace Existing Lift Station	4,460,000	-	150,000	360,000	360,000	400,000	-	**5,730,000**
WRF – Filter System Rehab	250,000	500,000	500,000	500,000	500,000	500,000	500,000	**3,250,000**
Forestry Barn	NEW	135,000	-	-	-	-	-	**135,000**
City Center Complex Reclaimed Water Irrigation	-	125,000	-	-	-	-	-	**125,000**
Total	**10,890,000**	**2,160,000**	**1,410,000**	**1,550,000**	**7,650,000**	**5,140,000**	**1,240,000**	**30,040,000**

STAFF REPORT
VARIANCE / 609 HERBERT ST
CASE NO. VARC-23-0001

REQUEST:	Variance from the Land Development Code (LDC) to reduce the width of a wetland buffer from 25 feet to a minimum of 15 feet and an average width of 25 feet.
LOCATION:	609 Herbert St.
PROPERTY OWNER:	Herbert 609, LLC
APPLICANT:	Bobby Ball, P.E., Zev Cohen & Assoc.
STAFF RECOMMENDATION:	Approval
STAFF CONTACT:	Gwen Perney, Planner (386) 506-5673
PLANNING COMMISSION DATE:	June 22, 2023

DISCUSSION:

The applicant is requesting a variance from the Land Development Code (LDC) in conjunction with the proposed Coastal Oaks subdivision (Case No. SUBD-23-0001) to use the St. Johns River Management District's wetland buffer width requirement in lieu of the City's wetland buffer requirements [LDC, Ch. 9, Article I, Sec. 5]. The LDC requires a static 25-foot buffer adjacent to a wetland, and the applicant is requesting to use the St. Johns River Management District wetland buffer requirement, which requires a minimum width of 15 feet and an average width of 25 feet adjacent to a wetland. According to the LDC, the purpose of a wetland buffer is to provide a reasonable assurance that a wetland and its associated ecological functions and values are protected, including protection of water quality, protection against turbidity, and ensuring adequate upland habit for wetland-dependent wildlife.

The subject property is currently zoned R-2D (Two-Family Residential), which only allows for the development of duplexes. The subject property is located on the north side of Herbert Street, west of the FEC Railroad tracks, east of 5th Street (Figure 1. Location Map on Page 2) and is an infill property surrounded by properties that have already developed with a mix of uses, including residential, light industrial warehouse, and commercial. The 2.2-acre infill subject property includes a 0.7-acre wetland (33% of the property), and there are several healthy specimen and historic trees throughout the site.

If the variance is approved, the applicant intends to subdivide the subject property into four residential lots. According to the applicant, using the St. Johns River Management District's wetland buffer width requirement will provide flexibility in developing the 2.2-acre infill property and meeting all the dimensional requirements for the R2-D zoning district, drainage improvements, lot grading, 20-foot rear building setback from a

wetland buffer and conservation easements for the 0.7-acre wetland and specimen and historic trees (Exhibit A).

Figure 1. Location Map

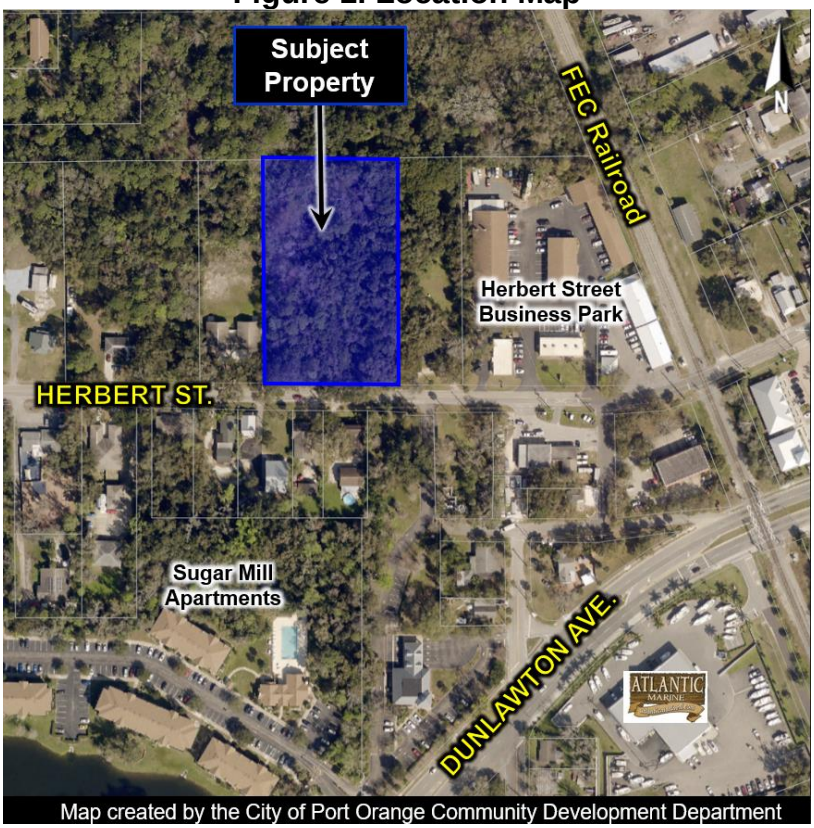

During the design of the subdivision, SJRWMD staff and the project engineer met on-site and reviewed the wetland including the limits and quality of the wetland and upland buffer area. The applicant states that based on the meeting, the wetland was found to be low in quality and isolated due to the construction of the railroad, Herbert Street, residential developments to the north and west, and commercial developments to the east and south. Due to its isolation, the wetland does not function in its optimal condition. The surrounding development has hydrologically drained the system and cut off the wetland area from providing flow to downstream areas and it contains invasive exotic plant species but still provides some hydrologic benefit to the surrounding area. The applicant designed the project to avoid wetland impacts and preserve it in its current state to continue to provide the same habitat, stormwater treatment, and flood protection the area currently provides. SJRWMD staff reviewed the proposed stormwater management system for the project, including the wetlands and proposed variable width buffer, and issued their permit for the project in May 2023.

According to SJRWMD, limited areas where the wetland buffer is a minimum of 15-foot wide will still provide sufficient distance from construction activities to a wetland without the activities creating any impacts on the quality of the wetlands and reducing negative impacts to overall wetland performance, including blocking noise, creating a visual separation, reducing direct human disturbance, and reducing sedimentation and nutrient

inputs. Drainage features such as spreader swales and discharge structures are acceptable within the buffer, provided the construction or use of these features does not adversely impact wetlands.

According to the applicant, the subdivision design does not result in the net loss of any wetland area on the subject property, and there is no change in the areas of the wetland buffer provided, regardless of the width requirement used. The applicant has demonstrated on the subdivision plan that a variable-width wetland buffer that averages 25 feet in width with a 16.7-foot minimum buffer width instead of a static 25-foot-wide wetland buffer and the overall area of the requested wetland buffer is equal to the overall area of the city required wetland buffer (See Table 1.).

Table 1. Wetland Buffer Area and Width Comparison

	Minimum Width	Maximum Width	Average Width	Total Wetland Buffer Area Square-Footage Provided
25-Foot Static Buffer – Per the LDC	25 - Feet	N/A	25 - Feet	10,305.36 SF
Proposed Wetland Buffer (SJRWMD)	**16.7 - Feet**	**27.7- Feet**	**25 - Feet**	**10,305.36 SF**

The City has allowed for the use of the SJRWMD wetland buffer requirements to be used in the development of the Woodhaven development as part of the Planned Unit Development approval.

REVIEW OF VARIANCE CRITERIA:

Chapter 19, Section 1, LDC, lists the review criteria that are used to determine whether a variance request should be granted. These criteria, accompanied by staff analysis, are as follows:

a) *Special conditions and circumstances exist which are peculiar to the land, structure, or building involved, and which do not apply to other lands, structures, or buildings in the same zoning district*.

There are special conditions that exist on the subject property. For a small infill property (±2.2 acres) there are several environmental conditions that need to be designed around, including a wetland, and several specimen and historic trees. The applicant is preserving the existing wetland (±0.7 acres or 33% of the ±2.2-acre property) and saving all six historic trees on the property and five specimen trees in accordance with the LDC.

According to the applicant, the required tree conservation easement around a healthy 41” historic tree located in the southwest corner required the duplex to be set back further into the site and encroach into the required 25-foot wetland buffer. In addition, the applicant states the City’s required wetland buffer width standard is higher than the SJRWMD wetland buffer requirements. Also, in addition to a wetland buffer, the LDC requires any single-family or duplex home to be setback 20 feet from the wetland buffer. The applicant had the option of

removing and mitigating a portion of the wetland, reducing the area of the easement around the historic tree at the southwest corner of the site, or removing the historic tree at the southwest corner of the site but determined that the best measure to protect these environmental conditions (trees and wetland) was to request a wetland buffer width consistent with the SJRWMD wetland buffer requirements.

b) *The special conditions and circumstances are not a result of the actions of the applicant.*

The special conditions and circumstances are not a result of the actions of the applicant. The special conditions on this site are related to environmental constraints on the site that have existed for years, prior to the current property owner purchasing the property.

c) *Literal interpretation and enforcement of the development code regulations would deprive the applicant of rights commonly enjoyed by other properties in the same zoning district under the terms of the development code and would work an unnecessary and undue hardship on the applicant.*

When a property is subdivided, it must comply with the current development requirements of the Land Development Code (LDC) or obtain a variance from the requirements. The City's wetland buffer intends to provide reasonable assurance that a wetland and its ecological functions and values are protected, including protection of water quality, protection against turbidity, and provision of adequate upland habitat for wetland-dependent wildlife adequate separation.

Although not their preference, the applicant could reduce the footprint of the proposed duplex units to fit in between the City's 25-foot wetland buffer requirement and the required tree protection easement around the historic tree on Lot 4, or only construct one duplex building (2 dwelling units) on the property instead of two duplex building (4 dwelling units). According to the applicant, the proposed units have 1,945 square feet of living area, and the minimum required living square footage for a dwelling in the R-2D zoning district is 900 square feet.

According to the applicant, the variance is necessary for their proposed lot layout plans and to accommodate the wetland and tree preservation areas on the subject property. The applicant states that the proposed averaged variable 25-foot width wetland buffer will still meet the intent of the LDC by providing a sufficient wetland buffer to minimize the impact on the adjacent wetland and ensure that the wetland and their associated ecological functions and values are protected, including the protection of water quality, protection against turbidity and provision of adequate upland habitat for wetland-dependent wildlife adequate separation. In addition, the applicant states that a significant amount of effort went into the subdivision design to keep the existing wetland as part of the subdivision instead of removing it and mitigating the removal of the wetland but to keep the wetland, preserve the six historic trees, and place two duplex structures (4 residential dwelling units) on the 2.2-acre property, a variance is

needed to allow for the width of the wetland buffer to be less than 25 feet in one area.

The literal interpretation of the code would not specifically deprive the applicant of other properties zoned in R-2D in Port Orange. It is not unusual for an LDC requirement to be less flexible than a county or federal requirement. The City's wetland buffer requirement is intended to provide a reasonable assurance that wetlands and their associated ecological functions and values are protected, including protection of water quality, protection against turbidity, and provision of adequate upland habitat for wetland-dependent wildlife.

d) *The variance, if granted, is the minimum variance necessary to make possible the reasonable use of the land, building, or structure.*

According to the applicant, the requested wetland buffer variance will still provide a sufficient buffer to protect water quality and provide adequate upland habitat for wetland-dependent wildlife. The applicant is proposing the minimum necessary variance from the wetland buffer requirement while still meeting other city environment preservation code requirements (tree and wetland preservation).

The subject property could be subdivided to comply with the static 25-foot wetland buffer requirement of the LDC; however, this would require a reduction in the footprint of the proposed structure or impact the root system of the healthy historic oak at the southwest corner of the property. According to the applicant, the averaged variable 25-foot width is sufficient to protect wetlands, and a minimum 15-foot buffer is a sufficient distance to protect the quality of the wetlands. (Figure 3)

Figure 3. Building setback

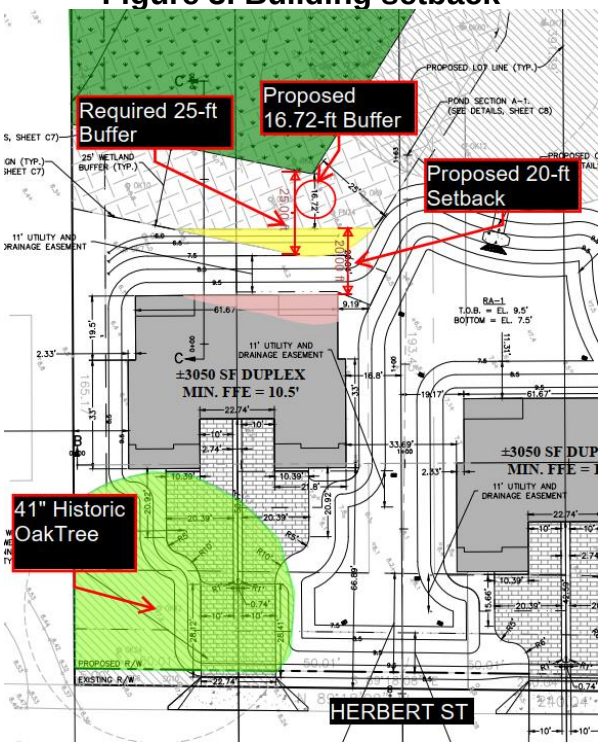

e) *Granting the variance request will not confer on the applicant any special privilege that is denied by the development code to other lands, buildings, or structures in the same zoning district.*

All new subdivisions within the city are required to provide a 25-foot minimum buffer around a wetland that will remain. Staff is not aware of a subdivision in the R-2D zoning district have formally requested to use the SJRWMD standard in lieu of the LDC requirements.

The City's wetland buffer requirements were adopted in accordance with the Countywide minimum environmental standards in 1990. Since that time, subdivisions with wetlands have been required to provide a 25-foot upland buffer around the wetlands. The City's adopted code is less flexible than the current, SJRWMD district standards, adopted in 2013, which has jurisdiction over the wetlands within the city. According to the SJRWMD, the average 25-foot width minimum standard is sufficient to protect wetlands. According to the applicant, the variable wetland buffer width is the standard in other jurisdictions including the City of Eustis, Town of Lady Lake, City of St. Petersburg, City of Atlantic Beach, Flagler County, and Nassau County) and in Port Orange, the Woodhaven PUD

f) *The granting of the variance will be in harmony with the general intent and purpose of this code and will not be injurious to the surrounding properties or detrimental to the public welfare.*

Granting of the variance will be in harmony with the general intent and purpose of the code. As previously stated, the function of a wetland buffer is to provide a reasonable assurance that a wetland and its associated ecological functions and values are protected, including protection of water quality, protection against turbidity, and provision of adequate upland habitat for wetland-dependent wildlife.

The City's standard for wetland alteration is based on a policy of no net loss of wetland function. If the proposed wetland buffer is approved, there will be no net loss of wetland function, and there will be a wetland buffer that complies with the requirements of the SJRWMD. According to the SJRWMD, the averaged variable 25-foot width is sufficient to protect wetlands, and a minimum 15-foot buffer is a sufficient distance to protect the quality of the wetlands.

g) *The variance represents a reasonable disposition of a claim brought under the Bert J. Harris Private Property Rights Protection Act, chapter 95-181, Laws of Florida, that a development order of the city has unreasonably burdened the applicant's property, based upon the recommendations of the special master appointed in accordance with the act, or the order of a court as described in the act.*

The variance requested is not based on a claim brought under the Bert J. Harris Private Property Rights Protection Act.

RECOMMENDATION:

Because the proposed variance is the minimum variance necessary to protect the existing wetland area and a healthy 41" historic tree on the property and meets environmental protections according to SJRWMD and the LDC; therefore, based on the findings in this report, staff recommends approval of the 15-foot minimum, 25-foot average wetland buffer requested by the applicant for the Coastal Oaks Subdivision.

ATTACHMENT:

1. Exhibit A. Letter from Applicant

Exhibit "A"

ZEVCOHEN & ASSOCIATES INC

300 Interchange Blvd., Suite C
Ormond Beach, FL 32174
386-677-2482 • Fax: 386-677-2505
www.ZevCohen.com

May 9, 2023

RECEIVED
MAY 1 2023
CITY OF PORT ORANGE

Department of Community Development
1000 City Center Circle
Port Orange, Florida 32129

RE: Coastal Oaks
Wetland Buffer Variance Request
VARC-23-0001 resubmittal
ZC 22119

We are writing to request a variance from the City of Port Orange pursuant to Ch. 9, Art. I, Sec. 8 of the LDC. This is in reference to the Coastal Oaks project located at 609 Herbert Street in Port Orange, FL. This property currently consists of 1 parcel made up of 2 previously platted lots, zoned R-2D. The intent of this zoning district is to provide affordable urban density housing and to serve as a transitional zone between multifamily and single-family residential uses. This parcel totals 2.181 acres (95,000+ ft^2). R-2D [LDC, Ch. 17, Sec. 27] allows for a minimum lot area of 0.115 acre (5000 ft^2), potentially allowing for a split of up to 14 lots. We are only proposing to subdivide into 4 parcels in order to reduce the impact on the natural habitat of the property. The variance requested is regarding [LDC, Ch. 9, Art. I, Sec. 5]: A buffer not less than 25 feet in width shall be established adjacent to and surrounding all wetlands. We propose using the SJRWMD wetland buffer standard 10.2.7(a). Wetland buffers are areas that surround a wetland and reduce negative impacts to overall wetland performance. Generally, secondary impacts can be avoided to wetlands if the wetland buffer is maintained in its natural vegetated state, this includes blocking noise, visual separation, reducing direct human disturbance, and reducing sedimentation and nutrient inputs. The State of Florida determined that secondary impacts will not occur to wetlands and water resources if a minimum 15', average 25' wetland buffer is maintained (62-330.301 (1)(f), Florida Administrative Code. Further, this rule is again defined in the Environmental Resource Permit Applicant's Handbook Volume I for use by the Water Management Districts in 10.2.7 A.H. Vol I. The State of Florida and all five water management districts regulate the Environmental Resource Permit Program (Northwest Florida, Suwannee River, St. Johns River, Southwest Florida, and Southwest Florida) agree and regulate the 15' minimum, 25' average wetland buffer requirement. Additionally, the Florida Department of Environmental Protection operating their portion of the Environmental Resource Permit Program and the State 404 Program also agree and regulate the 15' minimum, 25' average wetland buffer requirement. Similarly nearby cities such as the City of Daytona Beach have adopted the state wetlands protection standards. This requirement allows for a minimum width buffer of 15' with an average of 25' overall.

Wetland Buffer Variance Request LDC review criteria responses

Please see review criteria responses below [LDC, CH. 9, Art. I, Sec. 8].

1. This variance request is not derived from the actions or requirements of federal, state or regional agencies permitting process. This request is to revert from the city's requirement to the federal and state requirements for minimum buffer widths regarding wetlands as stated above.
2. The differences between the city's and St. Johns District's wetland buffer requirements are minor. Both requirements ask for the same square footage overall. The only difference being that the City's requires a fixed 25' instead of an average. For this project the 25' fixed wetland buffer requirement totals 10305.36 ft^2. This request is to reduce the buffer by 289.79ft^2 in one area and

increase by 297.51ft^2 in another area (see attached exhibit for proposed variance locations). The total Wetland buffer area will remain at a minimum of 10305.36 ft^2.

Variance review criteria [LDC, CH. 19, Sec. 1(g)(2)].

a. The current LDC requirement [LDC, Ch. 9, Art. I, Sec. 5] of a min. 25' wetland buffer and min. 20' setback for duplex units coupled with specimen tree protection requirements (LDC, CH. 9, Art. II. Sec. 16) constrict the usable area of the proposed development, please see the included exhibit. This creates special physical conditions that restrict intent and use of the land. The conflicting area is located across lot 4 between the tree conservation easement in front of the duplex and the wetland buffer (25' min.) with building setback (20' min.) in the rear of the duplex. Keeping the 20' setback and reducing the wetland buffer will maintain the intent of the LDC by giving the building and tenants enough room from the wetland buffer to maintain and use as intended. The reduced buffer will still be within and or greater than state and water management district requirements.
b. Our intent is to construct upon the usable area of the property with minimal environmental impact. In doing so we have adjusted the boundaries and building locations to the best configuration.
c. Literal interpretation of this code would force the applicant to apply to remove a historic tree. By removing the historic tree, the duplex would be able to shift forward allowing for the (45' total) buffer. The applicant is attempting to ensure minimal natural disturbance and to preserve the natural beauty of the land.
d. This is the minimum variance necessary to make reasonable use of the land.
e. The Granting of this request will not confer any special privilege that is denied to other lands in the same zoning district.
f. The granting of this variance is consistent with the overall intent of this code and will not result in increased danger or reduced safety for the owner or general public.
g. N/A: The Bert J Harris, Jr., Private Property Rights Protection Act does not apply to this variance request.

Enclosed with this request letter are the following in support of our variance request:

- One (1) copy of the Wetland Buffer Variance Exhibit

Should you have any questions or require any additional information, please contact our office.

Sincerely,
ZEV COHEN & ASSOCIATES, INC.

Robert Ball, P.E.
Vice President

LEGEND:

- TREE CONSERVATION EASEMENT
- WETLAND CONSERVATION EASEMENT
- EXISTING WETLANDS
- PERMEABLE CONCRETE/ PAVERS
- CONCRETE

ZEV COHEN & ASSOCIATES, INC.
900 INTERCHANGE BLVD., STE. C
DAYTONA BEACH, FL 32114
(386) 257-1115 FAX: (386) 257-1117
WWW.ZEVCOHEN.COM

CIVIL ENGINEERING
LANDSCAPE ARCHITECTURE
ENVIRONMENTAL
PLANNING
TRANSPORTATION

NO.	DATE	BY	SUBMITTALS / REVISIONS

COASTAL OAKS
FINAL ENGINEERING PLANS
WETLAND BUFFER VARIANCE EXHIBIT

CITY OF PORT ORANGE — VOLUSIA COUNTY, FLORIDA

PROJECT NO: ZC 22119

DESIGNED BY: BB

DRAFTED BY: MT

CHECKED BY: BB

DRAWING FILE: 22119-WETLAND EXHIBIT
XREF'S: 22119-BASE.DWG
XREF'S: 22119-SURV.DWG

ROBERT J. BALL, P.E., NO 60091
NOT VALID WITHOUT SEAL

SHEET: C1 OF 01

ZEVCOHEN & ASSOCIATES INC
300 Interchange Blvd., Suite C
Ormond Beach, FL 32174
386-677-2482 • Fax: 386-677-2505
www.ZevCohen.com

June 15, 2023

Ms. Gwen Perney
Principal Planner
City Of Port Orange
1000 City Center Circle
Port Orange, Florida 32129

RE: Herbert Street Property/Coastal Oaks
Case No. SUBD-23-0001
ZC 22119

Dear Ms. Perney,

The Coastal Oaks Project located at 609 Herbert Street in Port Orange, Florida is requesting a variance to [LDC, Ch. 9, Art. I, Sec. 5]: A buffer not less than 25 feet in width shall be established adjacent to and surrounding all wetlands.

During the permitting process with St. Johns River Water Management District (SJRWMD), the onsite wetlands were delineated by ZCA staff scientists, reviewed by SJRWMD staff, and surveyed by a professional surveyor to design around the wetlands and the wetland buffer. The project has been designed to avoid all direct and secondary impacts as defined by the State of Florida in the Florida Administrative Code (FAC 62-330) and the Environmental Resource Permit Applicant's Handbook Volume I.

The minimum standard utilized by the SJRWMD and Florida Department of Environmental Protection (FDEP) as outlined in the Applicants Handbook to guarantee that no secondary impacts will occur on wetlands is 15' minimum, 25' average. As long as a project meets these guidelines, it has been determined by the State of Florida that secondary impacts to wetlands will not occur. The current Environmental Resource Permit (ERP) rules were adopted by the SJRWMD in 1995. Most other cities and Volusia County have a 25' minimum standard that differs from the state standard of 15' minimum, 25' average buffer. The City of Daytona Beach mimics the 15' minimum, 25' average wetland buffer requirement.

Wetlands Assessment

The onsite wetlands are low in quality. The location of the wetlands have been historically isolated by the construction of the FEC Railroad, Herbert Street, residential developments to the north and west, and commercial developments to the east and south. Due to its historic isolation, the wetland does not function in its optimal condition. It offers little support to wildlife through outside habitats because it is disconnected from historic drainageways and uplands, it is limited by barriers to provide benefits to downstream areas, and its flow is hydrologically impeded by past development. The community structure of the vegetation is severely overgrown due to lack of land management and fire suppression. There is an overgrowth of invasive exotic plant species and the overall plant condition is poor with many downed, fallen, or rotten trees. Surrounding development has also hydrologically drained the system further reducing the quality of the wetlands. The wetlands do not receive the historic flows of waters that it once may have received due to its isolation. Ultimately, the onsite wetland would be rated very low on the Uniform Mitigation Assessment Methodology (UMAM) scale. If development occurs surrounding the site (which it is slated to), wetland quality will be further decreased.

However, Coastal Oaks has proposed to not impact the wetland or its wetland buffer (with a 15' minimum, 25' average). The development was designed to avoid wetland impacts and preserve the wetland in its current state. It will continue to provide habitat, stormwater treatment, and flood protection. To increase the quality of the wetland and prevent further impacts, the development has also implemented signage stating "Natural Conservation Area" surrounding the wetland and wetland buffer. This will reduce the amount of human induced stressors, such as foot traffic, trash, and unpermitted impacts by the surrounding residents. During construction, a double silt fence will also be utilized to reduce the potential impacts for siltation into the wetland.

Should you have any questions or require any additional information, please contact our office.

Sincerely,
ZEV COHEN & ASSOCIATES, INC.

Mallory Tatum
Environmental Scientist

SA/ns

Cc: Robert Ball, P.E.
FILE

STAFF REPORT
COASTAL OAKS SUBDIVISION PLAT & PLANS
CASE NO. SUBD-23-0001

REQUEST:	Approval of the Coastal Oaks Final Subdivision Plat and Plans
LOCATION:	609 Herbert Street (Figure 1)
APPLICANT:	Robert Ball, P.E., Zev Cohen & Associates
OWNER:	Herbert 609, LLC
STAFF CONTACT:	Gwen Perney, Principal Planner (386) 506-5673
STAFF RECOMMENDATION:	Approval
PLANNING COMMISSION:	June 22, 2023

DEVELOPMENT PROPOSAL
The applicant requests approval of the Coastal Oaks Subdivision. If approved, the applicant intends to subdivide a ±2.2-acre property into four (4) residential lots and construct two duplexes (4 total dwelling units). The subject property is currently vacant and zoned R-2D (Two-Family Residential), which allows for the development of duplexes. The review of a subdivision plat is a ministerial review in that the approving body must only consider the technical criteria and lot dimensional requirements in the City's Land Development Code for property zoned R-2D. The subject property is located on the north side of Herbert Street, west of the FEC Railroad tracks (Figure 1. Location Map).

Figure 1. Location Map

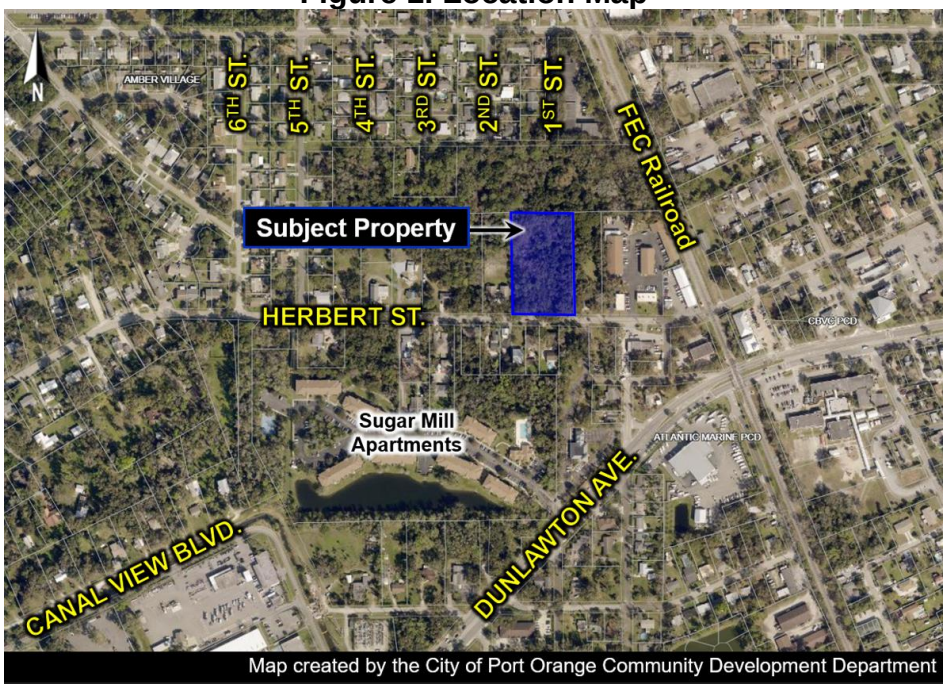

The plat and subdivision plans have been designed according to the requirements of the City's Land Development Code (LDC) (Figure 2). The lots within the subdivision will have access from Herbert Street, along with the following subdivision improvements.

- Dedication of 5 feet along the north side of Herbert Street for the ultimate 60-foot right-of-way width for Herbert Street between Sixth Street to Halifax Drive
- Grading and stormwater drainage infrastructure
- Water and sewer infrastructure
- Conservation Easement over the existing ± 0.7-acre wetland and wetland buffer
- Eleven (11) specimen trees will be preserved, which is greater than the nine (9) specimen trees required to be saved, including all six (6) historic live oaks, and 67% of the site will be covered by tree protection and conservation easements.
- Tree Conservation Easements for the preservation of existing trees.

Figure 2. Subdivision Plan for Coastal Oaks

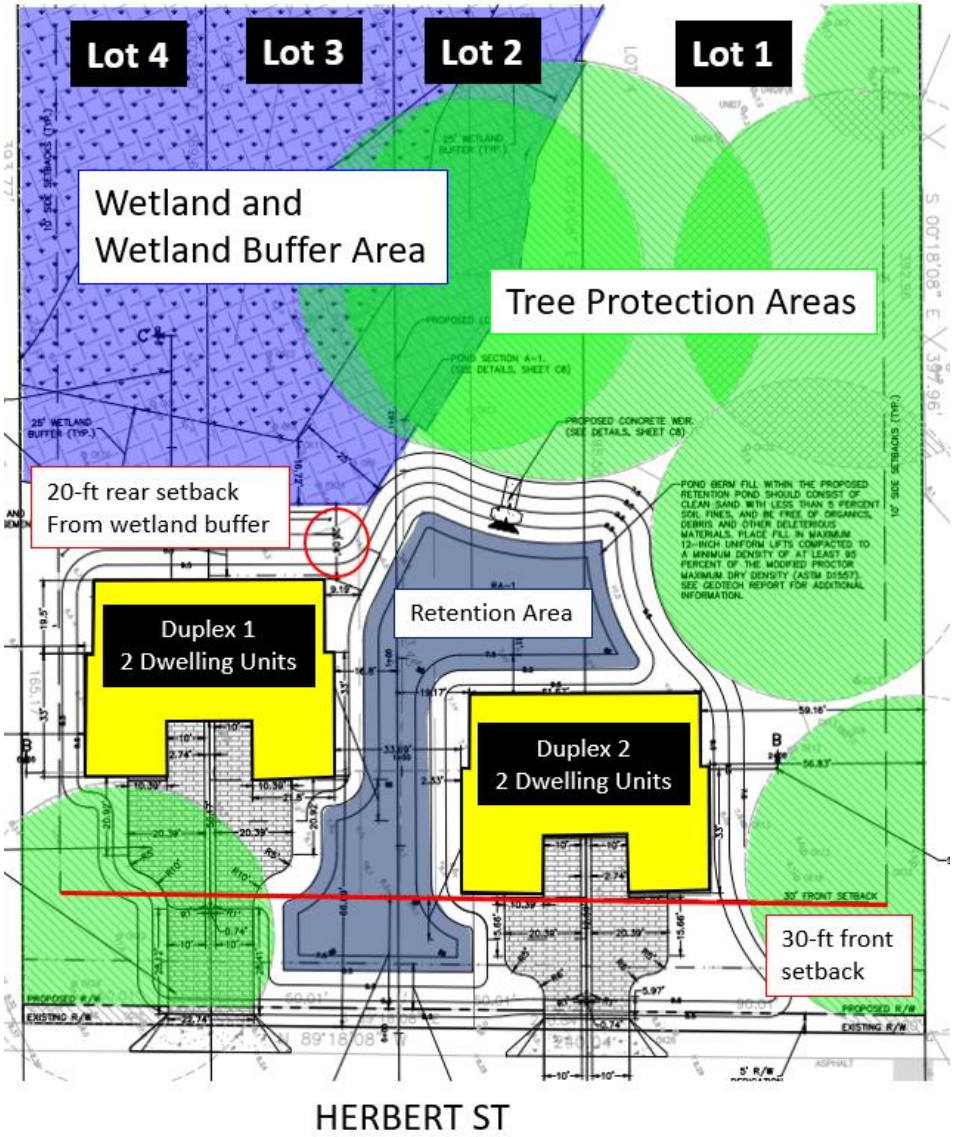

The subject property is zoned R2-D (Two-Family Residential) and must meet all the standard LDC requirements. Being processed concurrently with the Coastal Oaks Subdivision Plat and Plans is a variance request to allow a reduction in the width of the wetland buffer. [Case No. VARC-23-0001].

CONCURRENCY REVIEW

Public facilities and services such as roads, public infrastructure, schools, and recreational facilities are currently available to serve the proposed four (4) residential lots (Table 1). The following discussion summarizes the impacts the proposed development will have on these public facilities and services.

Table 1 - Infrastructure Impact Assessment for Four (4) Residential Lots

DEVELOPMENT VARIABLE	IMPACTS
Population[1]	10
A.M./P.M./Daily Peak Hour Trips[2]	2/2/29 trips
Sanitary Sewer (gallons per day)[3]	640 gallons
Potable Water (gallons per day)[4]	720 gallons
Solid Waste (lbs. Per day)[5]	32 pounds
Stormwater Drainage[6]	See Note
Recreation & Open Space[7]	0.1 acres

Notes:
1. **Population**: 2.39 persons per household (per 2020 Census)
2. **Transportation**: ITE Trip Generation Manual, 11th Edition: 7.20 daily trips, 0.55 AM peak hour, and 0.61 PM peak hour trips per unit per day
3. **Sanitary Sewer**: 160 gallons per day per Equivalent Residential Unit
4. **Potable Water**: 180 gallons per day per Equivalent Residential Unit
5. **Solid Waste**: 3.21 pounds per person per day
6. **Stormwater Drainage**: LOS standard = 25-year, 24-hour event. The drainage system will be designed to meet the requirements of the Land Development Code.
7. **Rec. & Open Space**: 7 acres per 1,000 persons (0.007 acres/person)

Water and Sewer

The City has available potable water and sanitary sewer capacity to accommodate the proposed four (4) residential lots. All lots will be provided with stub-outs for utilities. The developer will construct potable water and sanitary sewer lines in accordance with the approved utility plan for this project. Irrigation water will be provided by a private well on each lot.

Stormwater Drainage

The City's adopted level-of-service standard for stormwater drainage requires that all new retention/detention facilities be able to treat and convey the runoff from the 25-year, 24-hour storm event without causing flooding or pollution of receiving water bodies. In addition, there must be no net loss of stormwater retention function because of development; therefore, the subdivision property must have the same ability to store and discharge water after development as it does before development occurs.

The proposed subdivision design provides stormwater retention for the four (4) lots with a centralized dry retention area shown in Figure 2. Rainwater from the duplex units and impervious areas will be collected and discharged into the on-site retention area. If the retention area reaches its maximum volume level, it will outfall to the on-site wetland and recharge the wetland area. The drainage plan has been reviewed by staff and complies with all current City stormwater design requirements and Standard Construction details.

Recreation and Open Space

According to the City's 2022 Concurrency Management Report, the City is not deficient in any of the recreational facilities categories and there are sufficient facilities to support the additional population from the four (4) residential lots.

School Capacity

Subdivisions which are less than 10 lots are exempt from School Concurrency review. However, using the Volusia County School District's student generation rate, a total of one (1) student is anticipated to be generated by the proposed development. The Volusia County School District issued a letter of no impact for the development (Exhibit B).

Transportation

According to the Institute of Transportation Engineers (ITE) Trip Generation Manual, the trip generation rate for four (4) residential lots is anticipated to generate 2 AM peak-hour trips, 2 PM peak-hour trips, and 29 daily trips. The roadways within the general area of the proposed subdivision are operating within the adopted level of service standards, and the traffic generated from the 4-lot subdivision will not exceed the level of service standards for adjacent roadways.

The Institute of Transportation Engineers (ITE) Trip Generation Manual is nationally recognized by transportation professionals, including, transportation engineers, transportation planners, consultants, educators, technologists, and researchers for conducting vehicle trip generation rate analysis studies, determining on-site circulation patterns, performing access management studies, and determining traffic signal timing.

CONSISTENCY WITH THE COMPREHENSIVE PLAN

The subject property has a Future Land Use (FLU) designation of *Urban Medium Density Residential (4-8 units/acre)* on the City's Future Land Use Map. According to the Comprehensive Plan, the maximum gross residential density for the 2.2-acre subject property is 17 units. The development of four (4) residential lots is consistent with the allowable density for the current FLU designation on the subject property.

RECOMMENDATION

Staff recommends approval of the final Plat and Subdivision Plans for the Coastal Oaks Subdivision subject to the approval of the wetland buffer variance.

ATTACHMENTS:

1. Exhibit A – Coastal Oaks Subdivision Plat and Plans
2. Exhibit B – Volusia County School District Letter of Exemption

EXHIBIT A

COASTAL OAKS

A REPLAT

BEING A REPLAT OF LOTS 4 AND 5, MCDONALD'S SUBDIVISION, MAP BOOK 8, PAGE 128 RECORDED IN THE PUBLIC RECORDS OF VOLUSIA COUNTY, FLORIDA LYING WITHIN LOT 1, SECTION 4, TOWNSHIP 16 SOUTH, RANGE 33 EAST, CITY OF PORT ORANGE, VOLUSIA COUNTY, FLORIDA.

LEGAL DESCRIPTION:

LOTS 4 AND 5, MCDONALD'S SUBDIVISION IN PORT ORANGE, ACCORDING TO THE MAP OR PLAT THEREOF AS RECORDED IN PLAT BOOK 8 PAGE 128, PUBLIC RECORDS OF VOLUSIA COUNTY, FLORIDA.

THE ABOVE DESCRIBED PARCEL OF LAND CONTAINING 2.18 ACRES, MORE OR LESS (AS SURVEYED).

GENERAL NOTES:

1. BASIS OF BEARINGS: GPS/RTK OBSERVATIONS WITH THE BEARING OF NORTH 89°18'08" WEST BEING THE NORTH LINE OF HERBERT STREET.

2. ACCURACY: THE BOUNDARY LINEAR ERROR OF CLOSURE DOES NOT EXCEED 1:10,000. THE BOUNDARY ANGULAR ERROR OF CLOSURE DOES NOT EXCEED 15 SECONDS MULTIPLIED BY THE SQUARE ROOT OF THE NUMBER OF ANGLES TURNED.

3. MONUMENTS TO BE SET AS SHOWN WITHIN THE SUBDIVISION IN ACCORDANCE WITH FLORIDA STATUTES CHAPTER 177.091(9). MONUMENTATION AND ABBREVIATIONS ARE AS FOLLOWS:

●	5/8" IRON ROD TO BE SET WITH CAP STAMPED LB 7991, EXCEPT AS SHOWN	IRC	IRON ROD & CAP	R/W	RIGHT OF WAY	R	RADIAL CURVE
		IR	IRON ROD (NO CAP)	LB	LICENSED BUSINESS	D.&U.	DRAINAGE & UTILITY
⚠	PERMANENT REFERENCE MONUMENT	IP	IRON PIPE (NO CAP)	ORB	OFFICIAL RECORDS BOOK	ESM'T	EASEMENT
		FND	FOUND	PGS	PAGES	N/F	NOW OR FORMERLY
		ID	IDENTIFICATION	NR	NON-RADIAL CURVE		

4. THE SUBJECT SITE LIES WITHIN ZONE "X" AND ZONE "X" SHADED FLOOD INSURANCE RATE MAP (F.I.R.M.), MAP NUMBER 12127C0388J, DATED SEPTEMBER 29, 2017. (DO NOT USE PLAT FOR FLOOD ZONE DETERMINATIONS. FEMA FLOOD INSURANCE RATE MAP INFORMATION IS SUBJECT TO CHANGE. USE THE CURRENT APPROVED F.I.R.M. FOR COMMUNITY PANEL NUMBER, DATE AND FLOOD ZONE DETERMINATIONS)

5. MEASUREMENTS ARE IN U.S. FOOT AND DECIMAL PARTS THEREOF. ALL MEASUREMENTS REFER TO HORIZONTAL PLANE IN ACCORDANCE WITH THE DEFINITION OF THE UNITED STATES SURVEY FOOT OR METER ADOPTED BY THE NATIONAL INSTITUTE OF STANDARDS AND TECHNOLOGY. ALL MEASUREMENTS SHALL USE 39.37/12=3.28083333333 EQUATION FOR CONVERSION FROM A U.S. FOOT TO METERS.

6. THIS PLAT, RECORDED IN ITS GRAPHIC FORM, IS THE OFFICIAL DEPICTION OF THE SUBDIVIDED LANDS DESCRIBED HEREIN AND WILL IN NO CIRCUMSTANCES BE SUPPLANTED IN AUTHORITY BY ANY OTHER GRAPHIC OR DIGITAL FORM OF THE PLAT. THERE MAY BE ADDITIONAL RESTRICTIONS THAT ARE NOT RECORDED ON THIS PLAT THAT MAY BE FOUND IN THE PUBLIC RECORDS OF THIS COUNTY.

7. THIS PLAT IS SUBJECT TO ALL EASEMENTS OF RECORD, RESERVATIONS OF EASEMENTS, INCLUDING, BUT NOT LIMITED TO CONSERVATION, TREE CONSERVATION, MAINTENANCE, ACCESS & DRAINAGE, 8' ACCESS, 12' UTILITY & DRAINAGE GRANTED HEREON.

8. 8' ACCESS EASEMENTS SHOWN HEREON ARE FOR MAINTENANCE OF COMMON WALLS AND OTHER FACILITIES.

9. RETENTION AREAS ARE GRANTED AS EASEMENTS TO THE CITY OF PORT ORANGE WITH RIGHTS OF ACCESS, INGRESS AND EGRESS.

10. THE PRIVATE DRAINAGE AND STORMWATER SYSTEM, RETENTION AREA, AND ANY ASSOCIATED DRAINAGE STRUCTURES, INCLUDING, BUT NOT LIMITED TO WIER, ROOF DRAINS AND TRENCH DRAINS IS OWNED AND MAINTAINED BY THE COASTAL OAKS OWNERS ASSOCIATION, INC.

11. ALL DRAINAGE AND DRAINAGE MAINTENANCE ACCESS EASEMENTS OVER AND TO THE PRIVATE DRAINAGE AND STORMWATER SYSTEM SHOWN ON THIS PLAT ARE HEREBY GRANTED TO THE CITY OF PORT ORANGE FOR EMERGENCY MAINTENANCE PURPOSES IN THE EVENT THE ASSOCIATION FAILS TO PERFORM THE MAINTENANCE OF THE PRIVATE SOTRM DRAINAGE SYSTEM THEREBY CREATING A HAZARD TO THE PUBLIC HEALTH, SAFETY, AND GENERAL WELFARE. IN THE EVENT THE ASSOCIATION FAILS TO PERFORM SAID MAINTENANCE OF THE DRAINAGE AND STORMWATER MANAGEMENT SYSTEMS, THE CITY OF PORT ORANGE SHALL BE ENTITLED TO ENTER UPON THE EASEMENT AREAS TO PERFORM MAINTENANCE, REPAIR, OR REPLACE THE FACILITIES; AND SHALL HAVE THE RIGHT TO LIEN ALL OWNERS OF RECORD TO THE PROPERTY SUBJECT OF THIS PLAT FOR THE COST OF SUCH MAINTENANCE, REPAIR, AND REPLACEMENT AS DEEMED NECESSARY BY THE CITY. THE EASEMENTS GRANTED TO THE CITY DO NOT IMPOSE ANY OBLIGATION, BURDEN, RESPONSIBILITY OR LIABILITY UPON THE CITY TO ENTER UPON THE SUBJECT PROPERTY AND TAKE ANY ACTION TO REPAIR OR MAINTAIN THE PRIVATE DRAINAGE AND STORMWATER SYSTEM.

12. DECLARATION OF COVENANTS, CONDITIONS AND RESTRICTIONS FOR COASTAL OAKS RECORDED IN OFFICIAL RECORDS BOOK _____, PAGES _____ PUBLIC RECORDS OF VOLUSIA COUNTY, FLORIDA.

13. UTILITIES INCLUDE, BUT ARE NOT LIMITED TO SANITARY SEWER, POTABLE WATER, RECLAIMED WATER, STORM DRAINAGE, ELECTRIC, TELEPHONE, CABLE TELEVISION, SECURITY, NATURAL GAS, FIBER OPTIC AND TELECOMMUNICATION.

14. BUILDING REQUIREMENTS:
SETBACKS: FRONT=30 FEET, SIDE=10 FEET, REAR=25 FEET MAXIMUM BUILDING COVERAGE: 40% MINIMUM OPEN SPACE: 35% MAXIMUM BUILDING HEIGHT: 35 FEET

15. TREE CONSERVATION EASEMENTS AS DEFINED ON THIS PLAT ARE FOR THE EXPRESS PURPOSE OF THE PRESERVATION AND LONGEVITY OF THE TREES THEREIN. ACTIONS DETRIMENTAL TO TREE HEALTH AND SURVIVAL WITHIN THE BOUNDARIES OF THE EASEMENT ARE PROHIBITED WITHOUT THE EXPRESS PERMISSION OF THE CITY OF PORT ORANGE AND ANY OTHER AUTHORITY HAVING JURISDICTION OVER THE CONSERVATION EASEMENT. NOTHING HEREIN SHALL, HOWEVER, BE CONSTRUED TO PREVENT NATURAL VEGETATION WITHIN THE EASEMENT AREA FROM BEING CLEARED BY HAND TO PROVIDE A NEAT, MANICURED APPEARANCE. IN ADDITION, NOTHING HEREIN SHALL BE CONSTRUED TO PREVENT THE PLACEMENT OF SOD, IRRIGATION AND LANDSCAPE PLANTS OR TO PREVENT NORMAL LAWN MAINTENANCE SUCH AS MOWING, EDGING AND WEEDING NOT HARMFUL TO THE OBJECTIVE OF TREE PRESERVATION WITHIN THE EASEMENT AREA. ANY PROPOSED CONSTRUCTION OR OTHER USE WITHIN A CONSERVATION EASEMENT MUST BE REVIEWED AND APPROVED BY THE CITY OF PORT ORANGE AND ANY OTHER AUTHORITY HAVING JURISDICTION OVER THE CONSERVATION EASEMENT. LOTS 3 AND 4 ARE PERMITTED TO CONSTRUCT A PAVER DRIVEWAY IN TREE CONSERVATION EASEMENT #1 AS PER APPROVED SUBDIVISION PLAN SUBD-23-0001. THE LIMITS OF THE APPROVED DRIVEWAY MAY NOT BE EXPANDED WITHIN THE CONSERVATION EASEMENT.

16. NO ACCESSORY STRUCTURE SHALL BE PERMITTED WITHIN ANY EASEMENT.

17. THIS PLAT WAS MADE IN ACCORDANCE WITH A TITLE OPINION LETTER ISSUED BY ANTHONY PINIZZOTTO, P.A., DATED MARCH 21, 2023 AND IS SUBJECT TO ALL MATTERS CONTAINED ON THE PLAT OF MCDONALD'S SUBDIVISION IN PORT ORANGE, AS RECORDED IN PLAT BOOK 8, PAGE 128, PUBLIC RECORDS OF VOLUSIA COUNTY, FLORIDA.

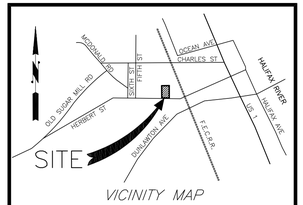

VICINITY MAP
NOT TO SCALE

CERTIFICATE OF SURVEYOR

THIS IS TO CERTIFY THAT THE PLAT SHOWN HEREON IS A TRUE AND CORRECT REPRESENTATION OF A SURVEY MADE UNDER MY RESPONSIBLE DIRECTION AND SUPERVISION; THAT SAID SURVEY IS ACCURATE TO THE BEST OF MY KNOWLEDGE AND BELIEF; THAT PERMANENT REFERENCE MONUMENTS ("P.R.M.s") AND PERMANENT CONTROL POINTS ("P.C.P.s") WILL BE PLACED AS REQUIRED BY LAW; AND FURTHER, THAT THE SURVEY DATA COMPLIES WITH ALL THE REQUIREMENTS OF CHAPTER 177, FLORIDA STATUTES, AS AMENDED, AND THE ORDINANCES OF THE CITY OF PORT ORANGE, FLORIDA.

PRELIMINARY
NOT FOR RECORDING

_____ _____
KENNETH J. KUHAR DATE
PROFESSIONAL SURVEYOR AND MAPPER
STATE OF FLORIDA LICENSE NUMBER LS6105

CERTIFICATE OF JOINDER AND CONSENT:

THE UNDERSIGNED HEREBY CERTIFIES THAT IT IS THE HOLDER OF MORTGAGES, LIENS, OR OTHER ENCUMBRANCES UPON THE PROPERTY SHOWN AND DESCRIBED HEREON AS THE PLAT ENTITLED "COASTAL OAKS" LOCATED IN THE CITY OF PORT ORANGE, VOLUSIA COUNTY, FLORIDA AND THAT THE UNDERSIGNED JOINS IN AND CONSENTS TO THE DEDICATION OF THE LANDS DESCRIBED ABOVE BY THE OWNERS THEREOF, AND AGREES THAT ITS MORTGAGES, LIENS, OR OTHER ENCUMBRANCES WHICH ARE RECORDED IN OFFICIAL RECORD BOOK 8321, PAGE 2974 OF THE PUBLIC RECORDS OF VOLUSIA COUNTY, FLORIDA, SHALL BE SUBORDINATED TO THE ABOVE DEDICATION.

IN WITNESS WHEREOF, ERIC GAFFKA, AS TRUSTEE OF THE ERIC GAFFKA REVOCABLE LIVING TRUST DATED DECEMBER 1, 1999,
HAS CAUSED THESE PRESENTS TO BE EXECUTED IN ITS NAME ON THIS _____ DAY OF _____, _____.

BY: _____ _____
PRINTED NAME: TITLE:

SIGNED AND SEALED IN THE PRESENCE OF

_____ _____
PRINTED NAME

_____ _____
PRINTED NAME

STATE OF FLORIDA
COUNTY OF VOLUSIA

THE FOREGOING INSTRUMENT WAS ACKNOWLEDGED BEFORE ME BY MEANS OF ( ) PHYSICAL PRESENCE OR ( ) ONLINE NOTARIZATION THIS _____ DAY OF _____, _____, BY _____, AS TRUSTEE OF THE ERIC GAFFKA REVOCABLE LIVING TRUST DATED DECEMBER 1, 1999 WHO ( ) IS PERSONALLY KNOWN TO ME, OR ( ) HAS PRODUCED _____ AS IDENTIFICATION.

IN WITNESS WHEREOF, I HAVE HEREUNTO SET
MY HAND AND SEAL ON THE ABOVE DATE.

_____
NOTARY PUBLIC STATE OF FLORIDA SEAL

_____
PRINTED NAME

MY COMMISSION EXPIRES: _____

COMMISSION NUMBER: _____

PLANNING COMMISSION CERTIFICATE OF APPROVAL

THIS IS TO CERTIFY THAT ON THIS _____ DAY OF _____, _____, THE FOREGOING PLAT WAS APPROVED BY THE PLANNING COMMISSION OF THE CITY OF PORT ORANGE, FLORIDA.

BY: _____
CHAIRMAN OF THE PORT ORANGE PLANNING COMMISSION

_____
PRINTED NAME

CITY COUNCIL CERTIFICATE OF APPROVAL

THIS IS TO CERTIFY THAT ON THIS _____ DAY OF _____, _____, THE FOREGOING PLAT WAS APPROVED BY THE CITY COUNCIL OF THE CITY OF PORT ORANGE, FLORIDA.

BY: _____
MAYOR, CITY OF PORT ORANGE PRINTED NAME

ATTEST: _____
CITY CLERK PRINTED NAME

KUHAR SURVEYING & MAPPING, LLC
1501 RIDGEWOOD AVENUE, SUITE 205, HOLLY HILL, FLORIDA 32117
Phone: 386-672-0002 WWW.KUHARSURVEYING.COM

PROJECT # K22048 **ISSUE DATE: MAY 31, 2023**

LB 7991 ©2022 KUHAR SURVEYING & MAPPING, LLC **LS (PSM) 6105**

PLAT BOOK _____, PAGE _____

DEDICATION AND RESERVATION

KNOW ALL MEN BY THESE PRESENTS, THAT THE UNDERSIGNED BEING THE OWNER IN FEE SIMPLE, OF THE LANDS SHOWN AND DESCRIBED HEREON AS THE PLAT ENTITLED "COASTAL OAKS", LOCATED IN THE CITY OF PORT ORANGE, VOLUSIA COUNTY, FLORIDA HEREBY DEDICATES THE SAID LANDS AND PLAT FOR THE USES AND PURPOSES HEREON EXPRESSED. ALL DRAINAGE, DRAINAGE MAINTENANCE ACCESS, PUBLIC UTILITY AND DRAINAGE, NON-VEHICULAR, SIDEWALK, CONSERVATION AND TREE CONSERVATION EASEMENTS SHOWN OR DESCRIBED ON THE PLAT ARE, UNLESS OTHERWISE INDICATED, GRANTED TO THE CITY OF PORT ORANGE, FLORIDA. ALL DRAINAGE AND DRAINAGE MAINTENANCE ACCESS EASEMENTS SHOWN OR DESCRIBED ON THE PLAT ARE ALSO GRANTED TO THE COASTAL OAKS OWNERS ASSOCIATION, INC. FOR THE PURPOSES DESCRIBED IN THE GENERAL NOTES. ACCESS EASEMENTS FOR INGRESS AND EGRESS SHOWN OR DESCRIBED ON THE PLAT ARE HEREBY GRANTED TO THE CITY OF PORT ORANGE FOR EMERGENCY VEHICLES AND GOVERNMENT SERVICES. ACCESS EASEMENTS FOR INGRESS AND EGRESS SHOWN OR DESCRIBED ON THE PLAT ARE HEREBY GRANTED TO THE COASTAL OAKS OWNERS ASSOCIATION, INC. TRACT P-1 IS HEREBY DEDICATED TO THE CITY OF PORT ORANGE FOR PUBLIC RIGHT-OF-WAY PURPOSES.

IN WITNESS WHEREOF, HERBERT 609 LLC., A FLORIDA LIMITED LIABILITY COMPANY, HAS CAUSED THESE PRESENTS TO BE EXECUTED IN ITS NAME ON THIS _____ DAY OF _____, _____.

HERBERT 609 LLC
A FLORIDA LIMITED LIABILITY COMPANY

BY: _____

_____
PRINTED NAME TITLE

SIGNED AND SEALED IN THE PRESENCE OF

_____ _____
PRINTED NAME

_____ _____
PRINTED NAME

STATE OF FLORIDA
COUNTY OF VOLUSIA

THE FOREGOING INSTRUMENT WAS ACKNOWLEDGED BEFORE ME BY MEANS OF ( ) PHYSICAL PRESENCE OR ( ) ONLINE NOTARIZATION THIS _____ DAY OF _____, _____, BY _____, AS AUTHORIZED PERSON OF HERBERT 609 LLC, A FLORIDA LIMITED LIABILITY COMPANY, ON BEHALF OF SAID COMPANY WHO ( ) IS PERSONALLY KNOWN TO ME, OR ( ) HAS PRODUCED _____ AS IDENTIFICATION.

IN WITNESS WHEREOF, I HAVE HEREUNTO SET
MY HAND AND SEAL ON THE ABOVE DATE.

_____
NOTARY PUBLIC STATE OF FLORIDA SEAL

_____
PRINTED NAME

MY COMMISSION EXPIRES: _____

COMMISSION NUMBER: _____

REVIEW BY SURVEYOR AND MAPPER FOR THE CITY

I HEREBY CERTIFY TO THE CITY, THAT THE UNDERSIGNED IS A LICENSED PROFESSIONAL SURVEYOR AND MAPPER AND IS EITHER EMPLOYED OR UNDER CONTRACT WITH THE CITY OF PORT ORANGE. I ALSO CERTIFY THAT I AM NOT REPRESENTING THE OWNER OR OWNERS OF RECORD AND I HAVE REVIEWED THIS PLAT AND FOUND IT TO BE IN COMPLIANCE WITH THE REQUIREMENTS OF CHAPTER 177, PART 1 OF THE FLORIDA STATUTES.

BY: _____ DATE: _____

PRINTED NAME: _____ PLS/PSM NO. _____

CERTIFICATE OF CLERK

I HEREBY CERTIFY THAT I HAVE EXAMIINED THE FOREGOING PLAT AND FIND THAT IT COMPLIES IN FORM WITH ALL THE REQUIREMENTS OF CHAPTER 177, PART 1 FLORIDA STATUTES AND WAS FILED FOR RECORD ON THE _____ DAY OF _____, _____, AT _____.

FILE NO. _____ DATE: _____

_____
CLERK OF THE CIRCUIT COURT IN AND FOR VOLUSIA COUNTY

_____
PRINTED NAME

COASTAL OAKS

A REPLAT

BEING A REPLAT OF LOTS 4 AND 5, MCDONALD'S SUBDIVISION, MAP BOOK 8, PAGE 128
RECORDED IN THE PUBLIC RECORDS OF VOLUSIA COUNTY, FLORIDA
LYING WITHIN LOT 1, SECTION 4, TOWNSHIP 16 SOUTH, RANGE 33 EAST,
CITY OF PORT ORANGE, VOLUSIA COUNTY, FLORIDA.

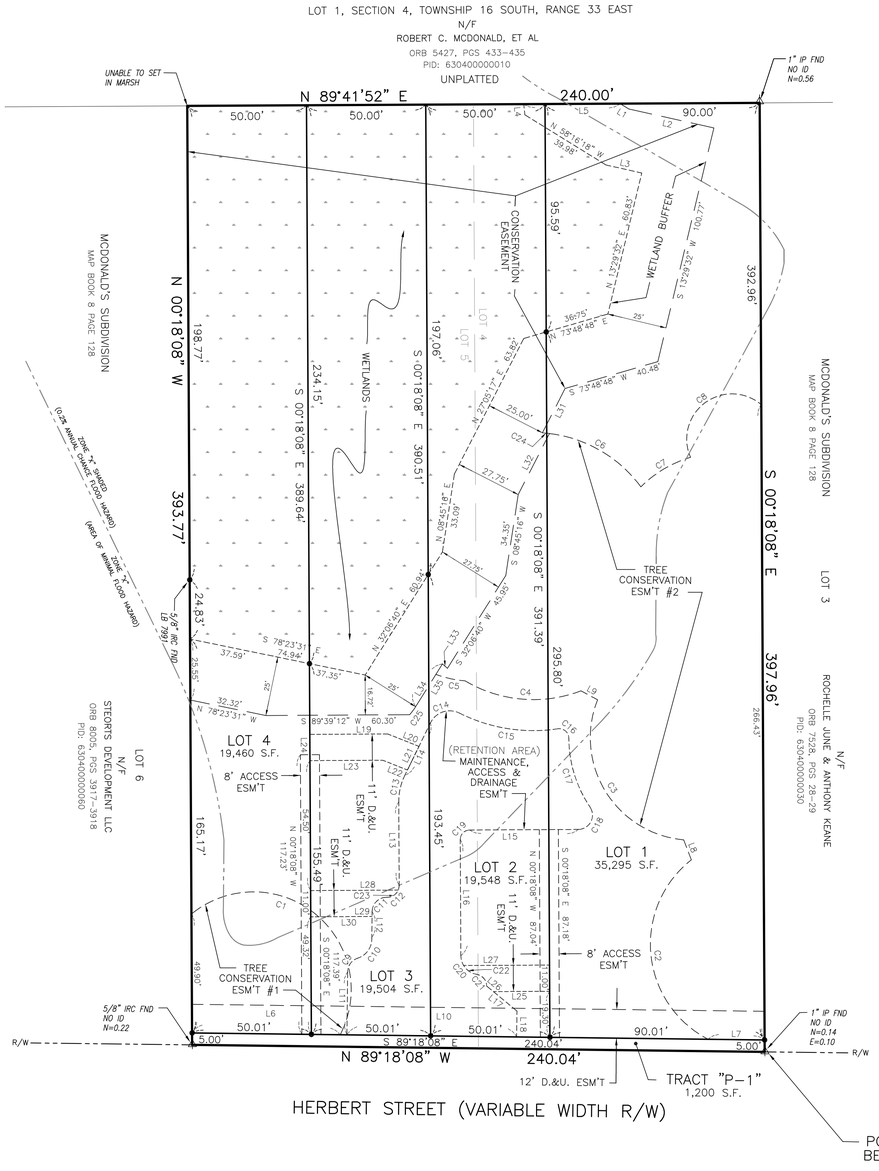

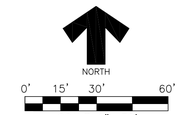

PLAT BOOK _____, PAGE _____

LINE TABLE		
LINE	BEARING	DISTANCE
L1	S 58°16'18" E	4.32'
L2	S 77°26'55" E	36.54'
L3	N 77°26'55" W	15.36'
L4	N 06°14'04" W	4.54'
L5	N 89°41'52" E	40.38'
L6	N 89°18'08" W	62.09'
L7	N 89°18'08" W	23.72'
L8	N 20°49'53" W	8.94'
L9	N 61°38'34" W	7.89'
L10	N 89°18'08" W	71.17'
L11	N 00°41'52" E	26.39'
L12	N 00°41'52" E	10.92'
L13	N 00°18'09" W	35.00'
L14	N 26°00'39" E	24.54'
L15	S 89°41'52" W	45.51'
L16	S 00°18'08" E	48.66'
L17	S 50°24'52" E	16.47'
L18	S 00°41'52" W	10.83'
L19	N 89°41'52" E	32.70'
L20	S 68°13'00" E	14.06'
L21	S 26°00'39" W	11.03'
L22	N 68°13'00" W	11.10'
L23	S 89°41'52" W	30.55'
L24	N 00°18'08" W	11.00'
L25	S 89°41'52" W	23.61'
L26	N 50°24'52" W	3.64'
L27	N 89°41'52" E	36.01'
L28	S 89°41'52" W	36.72'
L29	S 00°41'52" W	2.00'
L30	S 89°41'52" W	25.70'
L31	S 27°05'17" W	20.87'
L32	S 27°05'17" W	28.77'
L33	N 48°33'45" W	2.79'
L34	S 32°06'40" W	21.18'
L35	N 32°06'40" E	15.99'

CURVE TABLE					
CURVE	RADIUS	ARC LENGTH	CHORD LENGTH	CHORD BEARING	DELTA ANGLE
C1	41.00'	12.21'	80.33'	S 50°54'28" E	156°48'47"
C2	45.00'	89.72'	75.58'	N 05°19'18" W	114°13'47"
C3	43.00'	80.03'	68.97'	N 31°34'41" W	106°38'13"
C4	56.00'	50.48'	48.79'	N 85°05'48" W	51°38'47"
C5	47.00'	12.57'	12.53'	N 77°34'07" W	15°19'25"
C6	56.00'	45.61'	44.36'	S 59°44'40" E	46°40'13"
C7	50.00'	24.45'	24.21'	N 59°15'50" E	28°01'00"
C8	19.00'	51.00'	37.01'	N 53°18'16" E	153°48'14"
C9	6.00'	7.55'	7.06'	N 35°44'55" E	72°05'59"
C10	8.53'	11.29'	10.48'	N 34°53'46" E	75°50'18"
C11	6.01'	9.63'	8.63'	N 45°38'57" E	91°51'28"
C12	5.01'	8.06'	7.22'	N 45°30'23" E	92°12'14"
C13	25.00'	11.48'	11.38'	N 12°51'16" E	26°18'47"
C14	9.00'	14.25'	12.80'	N 71°21'26" E	90°41'35"
C15	69.00'	42.48'	41.81'	S 80°55'57" E	35°16'19"
C16	4.00'	6.87'	6.05'	S 49°23'19" E	98°21'37"
C17	52.00'	30.69'	30.24'	S 17°06'54" E	33°48'43"
C18	6.00'	12.96'	10.58'	S 27°50'19" W	123°43'07"
C19	4.00'	6.28'	5.66'	S 44°41'52" W	90°00'07"
C20	8.00'	11.18'	10.29'	S 40°20'45" E	80°05'14"
C21	5.00'	7.00'	6.44'	S 40°17'51" E	80°11'04"
C22	8.00'	6.82'	6.62'	N 55°57'21" W	48°52'01"
C23	5.01'	6.00'	5.65'	S 57°36'35" W	88°39'52"
C24	56.00'	2.96'	2.96'	S 84°35'37" E	03°01'42"
C25	25.00'	4.15'	4.15'	S 36°52'20" W	09°31'20"

GENERAL NOTES:

1. BASIS OF BEARINGS: GPS/RTK OBSERVATIONS WITH THE BEARING OF NORTH 89°18'08" WEST BEING THE NORTH LINE OF HERBERT STREET.

2. ACCURACY: THE BOUNDARY LINEAR ERROR OF CLOSURE DOES NOT EXCEED 1:10,000. THE BOUNDARY ANGULAR ERROR OF CLOSURE DOES NOT EXCEED 15 SECONDS MULTIPLIED BY THE SQUARE ROOT OF THE NUMBER OF ANGLES TURNED.

3. MONUMENTS TO BE SET AS SHOWN WITHIN THE SUBDIVISION IN ACCORDANCE WITH FLORIDA STATUTES CHAPTER 177.091(9). MONUMENTATION AND ABBREVIATIONS ARE AS FOLLOWS:

● 5/8" IRON ROD TO BE SET WITH CAP STAMPED LB 7991, EXCEPT AS SHOWN
△ PERMANENT REFERENCE MONUMENT

IRC	IRON ROD & CAP	R/W	RIGHT OF WAY	R	RADIAL CURVE
IR	IRON ROD (NO CAP)	LB	LICENSED BUSINESS	D.&U.	DRAINAGE & UTILITY
IP	IRON PIPE (NO CAP)	ORB	OFFICIAL RECORDS BOOK	ESM'T	EASEMENT
FND	FOUND	PGS	PAGES	N/F	NOW OR FORMERLY
ID	IDENTIFICATION	NR	NON-RADIAL CURVE		

4. THE SUBJECT SITE LIES WITHIN ZONE "X" AND ZONE "X" SHADED FLOOD INSURANCE RATE MAP (F.I.R.M.), MAP NUMBER 12127C0388J, DATED SEPTEMBER 29, 2017. (DO NOT USE PLAT FOR FLOOD ZONE DETERMINATIONS. FEMA FLOOD INSURANCE RATE MAP INFORMATION IS SUBJECT TO CHANGE. USE THE CURRENT APPROVED F.I.R.M. FOR COMMUNITY PANEL NUMBER, DATE AND FLOOD ZONE DETERMINATIONS)

5. MEASUREMENTS ARE IN U.S. FOOT AND DECIMAL PARTS THEREOF. ALL MEASUREMENTS REFER TO HORIZONTAL PLANE IN ACCORDANCE WITH THE DEFINITION OF THE UNITED STATES SURVEY FOOT OR METER ADOPTED BY THE NATIONAL INSTITUTE OF STANDARDS AND TECHNOLOGY. ALL MEASUREMENTS SHALL USE 39.37/12=3.28083333333 EQUATION FOR CONVERSION FROM A U.S. FOOT TO METERS.

6. THIS PLAT, RECORDED IN ITS GRAPHIC FORM, IS THE OFFICIAL DEPICTION OF THE SUBDIVIDED LANDS DESCRIBED HEREIN AND WILL IN NO CIRCUMSTANCES BE SUPPLANTED IN AUTHORITY BY ANY OTHER GRAPHIC OR DIGITAL FORM OF THE PLAT. THERE MAY BE ADDITIONAL RESTRICTIONS THAT ARE NOT RECORDED ON THIS PLAT THAT MAY BE FOUND IN THE PUBLIC RECORDS OF THIS COUNTY.

7. THIS PLAT IS SUBJECT TO ALL EASEMENTS OF RECORD, RESERVATIONS OF EASEMENTS, INCLUDING, BUT NOT LIMITED TO CONSERVATION, TREE CONSERVATION, MAINTENANCE, ACCESS & DRAINAGE, 8' ACCESS, AND 12' DRAINAGE & UTILITY GRANTED HEREON.

8. 8' ACCESS EASEMENTS SHOWN HEREON ARE FOR MAINTENANCE OF COMMON WALLS AND OTHER FACILITIES.

9. RETENTION AREAS ARE GRANTED AS EASEMENTS TO THE CITY OF PORT ORANGE WITH RIGHTS OF ACCESS, INGRESS AND EGRESS.

10. THE PRIVATE DRAINAGE AND STORMWATER SYSTEM, RETENTION AREA, AND ANY ASSOCIATED DRAINAGE STRUCTURES, INCLUDING, BUT NOT LIMITED TO WIER, ROOF DRAINS AND TRENCH DRAINS IS OWNED AND MAINTAINED BY THE COASTAL OAKS OWNERS ASSOCIATION, INC.

11. ALL DRAINAGE AND DRAINAGE MAINTENANCE ACCESS EASEMENTS OVER AND TO THE PRIVATE DRAINAGE AND STORMWATER SYSTEM SHOWN ON THIS PLAT IS HEREBY GRANTED TO THE CITY OF PORT ORANGE FOR EMERGENCY MAINTENANCE PURPOSES IN THE EVENT THE ASSOCIATION FAILS TO PERFORM THE MAINTENANCE OF THE PRIVATE STORM DRAINAGE SYSTEM THEREBY CREATING A HAZARD TO THE PUBLIC HEALTH, SAFETY, AND GENERAL WELFARE. IN THE EVENT THE ASSOCIATION FAILS TO PERFORM SAID MAINTENANCE OF THE DRAINAGE AND STORMWATER MANAGEMENT SYSTEMS, THE CITY OF PORT ORANGE SHALL BE ENTITLED TO ENTER UPON THE EASEMENT AREAS TO PERFORM MAINTENANCE, REPAIR, OR REPLACE THE FACILITIES; AND SHALL HAVE THE RIGHT TO LIEN ALL OWNERS OF RECORD TO THE PROPERTY SUBJECT OF THIS PLAT FOR THE COST OF SUCH MAINTENANCE, REPAIR, AND REPLACEMENT AS DEEMED NECESSARY BY THE CITY. THE EASEMENTS GRANTED TO THE CITY DO NOT IMPOSE ANY OBLIGATION, BURDEN, RESPONSIBILITY OR LIABILITY UPON THE CITY TO ENTER UPON THE SUBJECT PROPERTY AND TAKE ANY ACTION TO REPAIR OR MAINTAIN THE PRIVATE DRAINAGE AND STORMWATER SYSTEM.

12. DECLARATION OF COVENANTS, CONDITIONS AND RESTRICTIONS FOR COASTAL OAKS RECORDED IN OFFICIAL RECORDS BOOK _____, PAGES _____ PUBLIC RECORDS OF VOLUSIA COUNTY, FLORIDA.

13. UTILITIES INCLUDE, BUT ARE NOT LIMITED TO SANITARY SEWER, POTABLE WATER, RECLAIMED WATER, STORM DRAINAGE, ELECTRIC, TELEPHONE, CABLE TELEVISION, SECURITY, NATURAL GAS, FIBER OPTIC AND TELECOMMUNICATION.

14. BUILDING REQUIREMENTS:
SETBACKS: FRONT=30 FEET, SIDE=10 FEET, REAR=25 FEET MAXIMUM BUILDING COVERAGE: 40% MINIMUM OPEN SPACE: 35% MAXIMUM BUILDING HEIGHT: 35 FEET

15. TREE CONSERVATION EASEMENTS AS DEFINED ON THIS PLAT ARE FOR THE EXPRESS PURPOSE OF THE PRESERVATION AND LONGEVITY OF THE TREES THEREIN. ACTIONS DETRIMENTAL TO TREE HEALTH AND SURVIVAL WITHIN THE BOUNDARIES OF THE EASEMENT ARE PROHIBITED WITHOUT THE EXPRESS PERMISSION OF THE CITY OF PORT ORANGE AND ANY OTHER AUTHORITY HAVING JURISDICTION OVER THE CONSERVATION EASEMENT. NOTHING HEREIN SHALL, HOWEVER, BE CONSTRUED TO PREVENT NATURAL VEGETATION WITHIN THE EASEMENT AREA FROM BEING CLEARED BY HAND TO PROVIDE A NEAT, MANICURED APPEARANCE. IN ADDITION, NOTHING HEREIN SHALL BE CONSTRUED TO PREVENT THE PLACEMENT OF SOD, IRRIGATION AND LANDSCAPE PLANTS OR TO PREVENT NORMAL LAWN MAINTENANCE SUCH AS MOWING, EDGING AND WEEDING NOT HARMFUL TO THE OBJECTIVE OF TREE PRESERVATION WITHIN THE EASEMENT AREA. ANY PROPOSED CONSTRUCTION OR OTHER USE WITHIN A CONSERVATION EASEMENT MUST BE REVIEWED AND APPROVED BY THE CITY OF PORT ORANGE AND ANY OTHER AUTHORITY HAVING JURISDICTION OVER THE CONSERVATION EASEMENT. LOTS 3 AND 4 ARE PERMITTED TO CONSTRUCT A PAVER DRIVEWAY IN TREE CONSERVATION EASEMENT #1 AS PER APPROVED SUBDIVISION PLAN SUBD-23-0001. THE LIMITS OF THE APPROVED DRIVEWAY MAY NOT BE EXPANDED WITHIN THE CONSERVATION EASEMENT.

16. NO ACCESSORY STRUCTURE SHALL BE PERMITTED WITHIN ANY EASEMENT.

17. THIS PLAT WAS MADE IN ACCORDANCE WITH A TITLE OPINION LETTER ISSUED BY ANTHONY PINIZZOTTO, P.A., DATED MARCH 21, 2023 AND IS SUBJECT TO ALL MATTERS CONTAINED ON THE PLAT OF MCDONALD'S SUBDIVISION IN PORT ORANGE, AS RECORDED IN PLAT BOOK 8, PAGE 128, PUBLIC RECORDS OF VOLUSIA COUNTY, FLORIDA.

PRELIMINARY
NOT FOR RECORDING

KUHAR SURVEYING & MAPPING, LLC
1501 RIDGEWOOD AVENUE, SUITE 205, HOLLY HILL, FLORIDA 32117
Phone: 386-672-0002 WWW.KUHARSURVEYING.COM

PROJECT # K22048 **ISSUE DATE: MAY 31, 2023**

LB 7991 ©2022 KUHAR SURVEYING & MAPPING, LLC **LS (PSM) 6105**

EXHIBIT A

COASTAL OAKS

CITY OF PORT ORANGE – VOLUSIA COUNTY, FL

FINAL ENGINEERING PLANS

OWNER:
HERBERT 609 LLC
4122 HALIFAX DRIVE
PORT ORANGE, FL 32127
PHONE NUMBER:
FAX NUMBER:
CONTACT PERSON: CRAIG McGRAY
e-mail: craigmcgray@gmail.com

CIVIL ENGINEER:
ZEV COHEN & ASSOCIATES, INC.
300 INTERCHANGE BOULEVARD, SUITE C
ORMOND BEACH, FL 32174
PHONE NUMBER: (386) 677-2482
FAX NUMBER: (386) 677-2505
CONTACT PERSON: ROBERT BALL, P.E.
email: bball@zevcohen.com

SURVEYOR:
KUHAR SURVEYING & MAPPING, LLC
1501 RIDGEWOOD AVENUE
DAYTONA BEACH, FL 32117
PHONE NUMBER: (386) 672-0002
FAX NUMBER:
CONTACT PERSON: KENNETH J. KUHAR, P.S.M
e-mail: mailto:info@kuharsurveying.com

GEOTECHNICAL ENGINEER:
UNIVERSAL ENGINEERING SCIENCES
911 BEVILLE ROAD, SUITE 3
SOUTH DAYTONA, FL 32119
PHONE NUMBER: (386) 756-1105
FAX NUMBER: (386) 760-4067
CONTACT PERSON: MICHAEL MOHNEY, M.S.
e-mail: mmohney@universalengineering.com

LANDSCAPE ARCHITECT:
ZEV COHEN & ASSOCIATES, INC.
300 INTERCHANGE BOULEVARD, SUITE C
ORMOND BEACH, FL 32174
PHONE NUMBER: (386) 677-2482
FAX NUMBER: (386) 677-2505
CONTACT PERSON: JAKE STEHR, P.L.A
e-mail: jstehr@zevcohen.com

PROJECT DESCRIPTION:

THIS PROJECT INCLUDES THE RE-PLATTING AND SUBDIVISION OF LOTS 4 AND 5 ON EXISTING PARCEL 630403000040 INTO A FOUR (4) LOT SUBDIVISION. TWO (2) DUPLEX SINGLE FAMILY RESIDENTIAL HOMES WILL BE BUILT ON THE FOUR LOTS. THE FOUR LOTS WILL BE REQUIRED TO PROVIDE LANDSCAPING AT THE TIME OF CONSTRUCTION OF EACH HOME. EACH LOT WILL ALSO HAVE ITS OWN WELL TO PROVIDE IRRIGATION

SITE INFORMATION:	
SITE ADDRESS:	609 HERBERT STREET, PORT ORANGE, FL 32119
PROJECT AREA:	2.181 AC
TAX PARCEL I.D. #:	630403000040
EXISTING ZONING:	R-2D TWO FAMILY RESIDENTIAL
PROPOSED ZONING:	R-2D TWO FAMILY RESIDENTIAL
EXISTING LAND USE:	VACANT – RESIDENTIAL
PROPOSED LAND USE:	TWO FAMILY RESIDENTIAL
EXISTING FUTURE LAND USE:	URBAN MEDIUM DENSITY RESIDENTIAL (4-8 UNITS/ACRE)
UNIT/LOT COUNT:	2 DUPLEXES (4 UNITS)
SETBACKS:	
FRONT:	30 FT
SIDE:	10 FT
REAR:	25 FT
WETLAND:	20 FT
MINIMUM LIVING AREA:	900 SF
MAXIMUM BUILDING LOT COVERAGE:	40%
MAXIMUM BUILDING HEIGHT	35 FT
UTILITIES:	PROVIDED BY PORT ORANGE UTILITIES

LAND USE TABLE:	ACREAGE	PERCENTAGE
EXISTING CONDITIONS:		
WETLAND AREA	0.729 AC	33.43%
UPLAND AREA	1.452 AC	66.57%
PROPOSED IMPROVEMENTS:		
BUILDING(S)	0.141 AC	6.46%
CONCRETE APRONS	0.016 AC	0.73%
PERMEABLE PAVERS	0.083 AC	3.81%
POND AREA(S)	0.145 AC	6.65%
LANDSCAPE/OPEN SPACE	1.796 AC	82.35%
TOTAL PERVIOUS	2.024 AC	92.80%
TOTAL IMPERVIOUS	0.157 AC	7.20%

PLANNING COMMISSION VARIANCES:

1.) A BUFFER OF NOT LESS THAN 25 FEET IN WIDTH SHALL BE ESTABLISHED ADJACENT TO AND SURROUNDING ALL WETLANDS [LDC, CH. 9, ART. I, SEC. 5].

STAFF APPROVED VARIANCES:

1.) DISTANCE BETWEEN ACCESS POINT AND PROPERTY LINE (5' MINIMUM, 0' REQUESTED) [LDC, CH. 12, SEC. 3(E)].

2.) DRIVEWAY AND PARKING COVERAGE TOWARD THE CENTER OF THE FRONT YARD AND DIRECTLY IN FRONT OF THE GARAGE [LDC, CH. 12, SEC. 3(G)(4)].

3.) SCD ST-8 REQUIRES A 10' MINIMUM MAINTENANCE BERM/DRAINAGE EASEMENT AND THE APPLICANT IS REQUESTING TO END AT TOB.

4.) TREE CONSERVATION EASEMENTS ARE TO BE CONTAINED WHOLLY ON COMMON AREA MAINTAINED BY AN HOA AND NEVER LOCATED ON AN INDIVIDUAL RESIDENTIAL LOT [LDC, CH. 9, ART. II, SEC. 16(B)]

NOTE: THE SCALE OF THESE PLANS MAY HAVE CHANGED DUE TO REPRODUCTION.

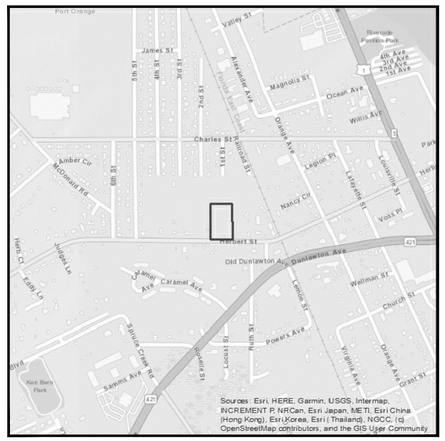

VICINITY MAP
SCALE: 1" = 800'
N

ZONING MAP
SCALE: 1" = 100'
CURRENT ZONING FOR THIS SITE IS: R2-D TWO FAMILY RESIDENTIAL
N

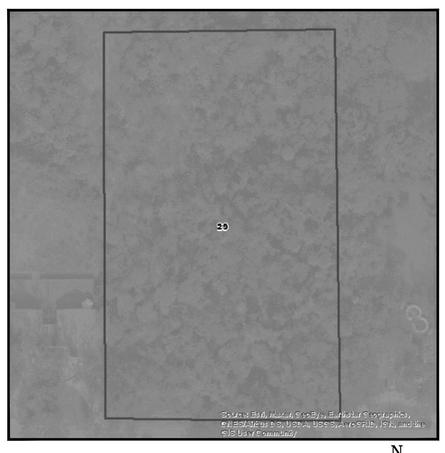

SOILS MAP
SCALE: 1" = 100'
THE SITE LIES WITHIN THE FOLLOWING VOLUSIA COUNTY SOIL CLASSIFICATIONS:
29 – IMMOKALEE SAND
N

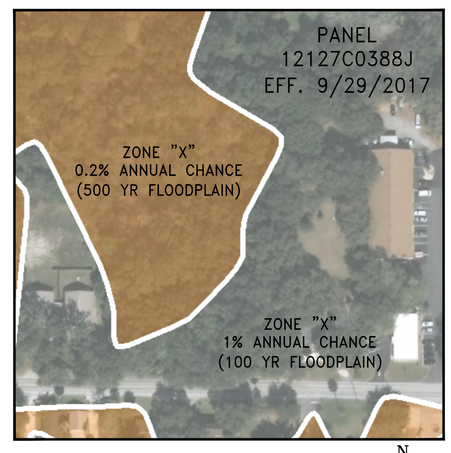

FLOOD ZONE MAP
SCALE: 1" = 100'
THE PROPERTY LIES IN:
FLOOD ZONE "X" PER FEMA MAPS 12127C0388J
N

SHEET INDEX:

C1	COVER SHEET
C2–C5	CONSTRUCTION NOTES
C6	CLEARING PLAN
C7	SITE LAYOUT PLAN
C8	DRAINAGE & UTILITY PLAN
C9	POND DETAIL SHEET
C10	SANITARY SEWER PLAN & PROFILE
C11–C15	CONSTRUCTION DETAILS
TP1	TREE PROTECTION PLAN & DETAILS

LEGAL DESCRIPTION:

A REPLAT OF LOTS 4 AND 5, MCDONALD'S SUBDIVISION, RECORDED IN MAP BOOK 8, PAGE 28 OF THE PUBLIC RECORDS OF VOLUSIA COUNTY, FLORIDA AND BEING MORE FULLY DESCRIBED AS FOLLOWS:

BEGINNING AT A POINT IN THE NORTH LINE OF HERBERT STREET (VARIABLE WIDTH RIGHT-OF-WAY), SAID POINT BEING THE SOUTHWEST CORNER OF LOT 3 AND THE SOUTHEAST CORNER OF LOT 4; THENCE WITH SAID NORTH LINE AND THE SOUTH LINE OF LOTS 4 AND 5, NORTH 89 DEGREES 18 MINUTES 08 SECONDS WEST, A DISTANCE OF 240.04 FEET TO A POINT, SAID POINT BEING THE SOUTHWEST CORNER OF LOT 5 AND THE SOUTHEAST CORNER OF LOT 6; THENCE LEAVING SAID NORTH LINE, WITH THE WEST LINE OF LOT 5 AND THE EAST LINE OF LOT 6, NORTH 00 DEGREES 18 MINUTES 08 SECONDS WEST, A DISTANCE OF 393.77 FEET TO A POINT, SAID POINT BEING THE NORTHWEST CORNER OF LOT 5 AND THE NORTHEAST CORNER OF LOT 6; THENCE LEAVING SAID WEST AND EAST LINE, WITH THE NORTH LINE OF LOTS 5 AND 4, NORTH 89 DEGREES 41 MINUTES 52 SECONDS EAST, A DISTANCE OF 240.00 FEET TO THE NORTHEAST CORNER OF LOT 4 AND THE NORTHWEST CORNER OF LOT 3; THENCE LEAVING SAID NORTH LINE AND THE EAST LINE OF LOT 4 AND THE WEST LINE OF LOT 3, SOUTH 00 DEGREES 18 MINUTES 08 SECONDS EAST, A DISTANCE OF 397.96 FEET TO THE POINT OF BEGINNING.

THE ABOVE DESCRIBED PARCEL OF LAND CONTAINING 2.18 ACRES (95,006 SQUARE FEET), MORE OR LESS.

ZEV COHEN & ASSOCIATES, INC.
300 INTERCHANGE BLVD., STE. C
ORMOND BEACH, FL 32174
WWW.ZEVCOHEN.COM
(EB-0549)
CIVIL ENGINEERING
LANDSCAPE ARCHITECTURE
ENVIRONMENTAL
PLANNING
TRANSPORTATION
(LC-42)

NO.	DATE	BY	SUBMITTALS / REVISIONS
1	03-24-23	MT	REVISED PER CITY COMMENTS
2	04-24-23	MT	REVISED PER CITY AND DISTRICT COMMENTS
3	05-26-23	SA	REVISED PER CITY COMMENTS

COASTAL OAKS
FINAL ENGINEERING PLANS
COVER SHEET
VOLUSIA COUNTY, FLORIDA
CITY OF PORT ORANGE

PROJECT NO: ZC 22119
DESIGNED BY: BB
DRAFTED BY: MT
CHECKED BY: BB
DRAWING FILE: 22119-COV

ROBERT J. BALL, P.E., NO.60001
NOT VALID WITHOUT SEAL

SHEET: C1 OF 15

R:\22119 MCGRAY HERBERT STREET PROPERTY – P.O\FINAL ENGINEERING PLANS\CADWORK\22119-COV.DWG – PRINTED 5/31/2023 8:32 AM

GENERAL NOTES

1. ALL CONSTRUCTION, DRAINAGE STRUCTURES AND OTHER SITE IMPROVEMENTS SHALL BE CONSTRUCTED IN ACCORDANCE WITH THE LATEST EDITIONS OF FLORIDA DEPARTMENT OF TRANSPORTATION STANDARD PLANS AND SPECIFICATIONS FOR ROAD AND BRIDGE CONSTRUCTION OR THE CITY'S LAND DEVELOPMENT CODE REQUIREMENTS, STANDARD CONSTRUCTION DETAILS & STANDARD SPECIFICATIONS, WHICHEVER IS MORE STRINGENT.
2. SHOP DRAWINGS AND CERTIFICATIONS FOR ALL MATERIALS AND STRUCTURES ARE REQUIRED. THE CONTRACTOR SHALL REVIEW AND SIGN SHOP DRAWINGS. THE CONTRACTOR SHALL SUBMIT REVIEWED SHOP DRAWINGS TO THE ENGINEER FOR APPROVAL PRIOR TO ORDERING THE MATERIALS REQUIRED FOR CONSTRUCTION.
3. CONSTRUCTION SHALL BE IN ACCORDANCE WITH ALL REQUIRED PERMITS. THE CONTRACTOR SHALL MAINTAIN COPIES OF ALL RELEVANT PERMITS AND CONSTRUCTION DOCUMENTS AVAILABLE ON THE JOB SITE AT ALL TIMES.
4. CONTRACTOR TO MAINTAIN THE SITE IN A SAFE AND SECURE MANNER TO PROTECT PUBLIC SAFETY AND THE CONDITIONS OF THE IMPROVEMENTS.
5. THE CONTRACTOR SHALL MAINTAIN, AT THE JOB SITE, A RECORD COPY OF ALL CONSTRUCTION DRAWINGS AND SPECIFICATIONS ON WHICH ALL FIELD CHANGES ARE TO BE SHOWN. THESE CHANGES ARE TO BE INCORPORATED IN THE "AS-BUILT" SURVEY FURNISHED TO THE ENGINEER.
6. SHOULD CONDITIONS VARY FROM THOSE SHOWN ON THESE PLANS, THE CONTRACTOR SHALL IMMEDIATELY NOTIFY THE ENGINEER OF RECORD PRIOR TO CONTINUING CONSTRUCTION.
7. ANY FIELD MODIFICATIONS OR DEVIATIONS TO THESE CONSTRUCTION PLANS REQUIRES APPROVAL BY BOTH THE ENGINEER OF RECORD AND THE CITY PRIOR TO PERFORMING THE WORK.
8. IT SHALL BE THE RESPONSIBILITY OF THE CONTRACTOR TO PROVIDE AN "AS-BUILT" SURVEY OF THE COMPLETED CONSTRUCTION. THE "AS-BUILT" SURVEY SHALL BE PREPARED IN ACCORDANCE WITH APPROPRIATE GOVERNMENTAL REGULATIONS, STANDARD CONSTRUCTION DETAIL M-5, AND ZCA REQUIREMENTS. THE "AS-BUILT" SURVEY SHALL BE PREPARED ON ZCA'S DESIGN/PERMITTED PLANS. ELECTRONIC AND PAPER COPIES OF THE AS-BUILT SURVEY SHALL BE PROVIDED TO THE ENGINEER OF RECORD. THE "AS-BUILT" SHALL BE SIGNED AND SEALED BY A FLORIDA REGISTERED PROFESSIONAL LAND SURVEYOR.
9. THE CONTRACTOR SHALL BE RESPONSIBLE FOR MAINTAINING VEHICULAR AND PEDESTRIAN TRAFFIC SAFELY THROUGH THE WORK ZONE AT ALL TIMES, IF APPLICABLE. ANY SIDEWALK, LANE OR ROAD CLOSURE REQUIRES REVIEW AND APPROVAL IN ADVANCE, A SEVEN (7) DAY MINIMUM NOTICE TO PORT ORANGE FOR REVIEW AND PUBLIC NOTICING AND A SEVEN (7) DAY MINIMUM NOTICE TO THE VOLUSIA COUNTY TRAFFIC OPERATIONS (386-239-6535). THE CONTRACTOR SHALL BE RESPONSIBLE FOR THE REQUIRED COORDINATION.
10. MAINTENANCE OF TRAFFIC WILL BE IN ACCORDANCE WITH THE MANUAL ON UNIFORM TRAFFIC CONTROL DEVICES FOR STREETS AND HIGHWAY CONSTRUCTION, MAINTENANCE AND UTILITY OPERATIONS AND THE FLORIDA DEPARTMENT OF TRANSPORTATION STANDARD PLANS, LATEST EDITIONS.
11. CONTRACTOR TO NOTIFY THE REGULATORY AGENCIES FORTY EIGHT (48) HOURS PRIOR TO THE START OF CONSTRUCTION. CONTRACTOR SHALL SEND COPIES OF ALL TESTING REPORTS TO THE REGULATORY AGENCIES AND THE ENGINEER OF RECORD.
12. SURVEY INFORMATION PROVIDED BY KUHAR SURVEYING & MAPPING DATED 04/18/2022. ALL ELEVATIONS BASED ON NORTH AMERICAN VERTICAL DATUM OF 1988 (NAVD 88) AND ARE SHOWN IN FEET. STATE PLANE COORDINATES ARE BASED UPON NAD 83.
13. ALL PUBLIC LAND CORNERS AND MONUMENTS WITHIN THE LIMITS OF CONSTRUCTION ARE TO BE PROTECTED. THE CONTRACTOR SHALL EMPLOY A SURVEYOR, REGISTERED IN THE STATE OF FLORIDA, TO REPLACE/RESTORE ANY PROPERTY OR LAND MARKERS DISTURBED BY CONSTRUCTION ACTIVITIES.
14. NO LAND SHALL BE CLEARED, EXCAVATED OR FILLED AND NO STRUCTURES SHALL BE ERECTED, REPAIRED OR DEMOLISHED WITHOUT PROPER PERMIT(S).
15. THE CONTRACTOR SHALL BE RESPONSIBLE FOR COMPLIANCE WITH ALL LOCAL, STATE AND FEDERAL REGULATIONS AS WELL AS THE REQUIREMENTS OF ST. JOHNS RIVER WATER MANAGEMENT DISTRICT AND E.P.A. (NPDES). CONTRACTOR SHALL ESTABLISH BEST MANAGEMENT PRACTICES AND EROSION CONTROL METHODS PRIOR TO COMMENCING ANY SITE CLEARING OR DEMOLITION AND SHALL MAINTAIN THOSE BARRIERS UNTIL FINAL ACCEPTANCE OF THE PROJECT.
16. THE CONTRACTOR SHALL BE RESPONSIBLE FOR THE PROJECT'S NPDES PERMITTING, INSPECTION AND REPORTING, IF APPLICABLE.
17. ALL DELINEATED WETLAND AREAS SHALL BE FENCED WITH TYPE III SILT FENCING PRIOR TO CONSTRUCTION. FENCING SHALL NOT BE REMOVED UNTIL ALL CONSTRUCTION IS COMPLETED. LIMITS OF SILT FENCE SHOWN ON PLANS ARE APPROXIMATE AND ARE TO BE ADJUSTED AS NECESSARY TO MEET FIELD CONDITIONS AND/OR AS DIRECTED BY THE ENGINEER.
18. THE EROSION, SEDIMENT AND TURBIDITY CONTROL MEASURES DELINEATED HEREON ARE THE MINIMUM REQUIRED. ADDITIONAL CONTROLS MAY BE NEEDED, DEPENDING UPON THE ACTUAL SITE CONDITIONS, JURISDICTIONAL AGENCY PERMIT REQUIREMENTS AND CONSTRUCTION OPERATIONS. STAKED SILT FENCE SHALL BE UTILIZED TO CONTROL EROSION AND RELEASE OF SUSPENDED SOLIDS. SEDIMENT TRACKING CONTROL DEVICES SHALL BE USED TO PREVENT THE OFFSITE TRANSPORT OF SEDIMENT BY MOTORIZED VEHICLES. IF CONTROL MEASURES DO NOT PROVE SATISFACTORY, WORK SHALL CEASE UNTIL NEW MEASURES ARE ADOPTED WITH SATISFACTORY RESULTS.
19. ALL EROSION AND SEDIMENT TRACKING CONTROL DEVICES SHALL BE INSPECTED DAILY AND IMMEDIATELY FOLLOWING A RAINFALL EVENT. REFER TO PROJECT'S STORMWATER POLLUTION PREVENT PLAN (SWPPP). ANY DEFICIENCIES FOUND IN THE EROSION CONTROL MEASURES SHALL BE REPAIRED IMMEDIATELY. THE CONTRACTOR SHALL KEEP A LOG BOOK DOCUMENTING THESE DAILY INSPECTIONS, DEFICIENCIES AND REMEDIAL ACTIONS.
20. ALL UNSUITABLE SOILS AND UNSUITABLE MATERIALS (SUCH AS CLAY, ORGANICS, ROCK, CEMENTED COQUINA, DEBRIS, ETC.) SHALL BE REMOVED, DISPOSED OF IN A LEGAL MANNER AND REPLACED WITH DRY COMPACTED GRANULAR MATERIAL SATISFACTORY TO THE CITY. THE COST OF ALL WORK AND MATERIALS IS TO BE INCLUDED IN THE UNIT PRICE OF THE ASSOCIATED CONSTRUCTION ITEMS UNLESS OTHERWISE SHOWN IN THE PLANS.
21. IN THE EVENT THAT WATER IS ENCOUNTERED DURING CONSTRUCTION, DEWATERING SHALL BE PERFORMED AS NEEDED. THE CONTRACTOR IS SOLELY RESPONSIBLE FOR THE DESIGN, PERMITTING, INSTALLATION, OPERATION AND SUBSEQUENT REMOVAL OF DEWATERING SYSTEMS AND THEIR SAFETY AND CONFORMITY WITH APPLICABLE CODES AND REGULATIONS.
22. PRIOR TO COMMENCEMENT OF CONSTRUCTION, THE CONTRACTOR SHALL NOTIFY THE APPROPRIATE ELECTRIC, TELEPHONE, GAS, CABLE TELEVISION, COMMUNICATIONS, ETC. COMPANIES TO DETERMINE THE TYPE AND LOCATION OF ALL UNDERGROUND FACILITIES IN THE AREA OF CONSTRUCTION.
23. ALL UNDERGROUND UTILITIES HAVE BEEN LOCATED HORIZONTALLY AND VERTICALLY BASED ON THE BEST INFORMATION AVAILABLE AND SHOULD BE CONSIDERED APPROXIMATE ONLY. THE CONTRACTOR SHALL BE RESPONSIBLE FOR LOCATING AND VERIFYING ALL ELEVATIONS OF EXISTING UTILITIES (PUBLIC AND PRIVATE) SHOWN OR NOT SHOWN PRIOR TO CONSTRUCTION. THE CONTRACTOR SHALL BE RESPONSIBLE FOR NOTIFYING THE VARIOUS UTILITY COMPANIES TO MAKE THE NECESSARY ARRANGEMENTS FOR ANY RELOCATION, DISRUPTION OF SERVICE OR CLARIFICATION OF ACTIVITY REGARDING SAID UTILITY. THE CONTRACTOR SHALL EXERCISE EXTREME CAUTION WHEN WORKING NEAR OR CROSSING A UTILITY, WHETHER SHOWN ON THESE PLANS OR FIELD LOCATED. THE CONTRACTOR SHALL BE RESPONSIBLE TO COORDINATE AND NOTIFY THE UTILITY COMPANIES FOR UTILITIES WHICH NEED TO BE RELOCATED FOR THE PROPOSED CONSTRUCTION. THE CONTRACTOR SHALL BE RESPONSIBLE TO PAY FOR ANY REPAIR, RELOCATION OR TEMPORARY MEASURES NEEDED FOR EXISTING OR PROPOSED UTILITIES.
24. IT SHALL BE THE RESPONSIBILITY OF THE CONTRACTOR TO LOCATE AND AVOID ALL UTILITIES, OTHER STRUCTURES AND OBSTRUCTIONS BOTH ABOVE AND BELOW GROUND. ALL DAMAGE RESULTING FROM THE CONTRACTOR'S FAILURE TO COMPLY WITH THIS REQUIREMENT SHALL BE REPAIRED AT THE CONTRACTOR'S EXPENSE.
25. THE CONTRACTOR SHALL NOTIFY ALL UTILITY PROVIDERS AT LEAST TWO (2) BUSINESS DAYS PRIOR TO ANY CONSTRUCTION.
26. THE CONTRACTOR SHALL MAINTAIN UNINTERRUPTED SERVICE AT ALL SERVICE CONNECTIONS. THE MANNER IN WHICH THIS IS ACCOMPLISHED SHALL BE LEFT TO THE DISCRETION OF THE CONTRACTOR, SUBJECT TO THE REQUIREMENTS OF THE CONTRACT SPECIFICATIONS.
27. ALL EXISTING DRAINAGE STRUCTURES AND UTILITIES WITHIN THE CONSTRUCTION LIMITS SHALL REMAIN, UNLESS OTHERWISE NOTED IN PLANS.
28. ALL STATIONS AND OFFSETS REFER TO CENTERLINE CONSTRUCTION UNLESS OTHERWISE NOTED IN PLANS.
29. THE LENGTH OF ALL DRAINAGE PIPES AND LOCATION OF ALL DRAINAGE STRUCTURES ARE APPROXIMATE. THE LOCATION OF THE DRAINAGE STRUCTURE SHALL DETERMINE THE LENGTH OF PIPE.
30. THE TOP OF CASTING ELEVATIONS (TC) OF ALL STRUCTURES ARE SHOWN. HOWEVER, THE CONTRACTOR SHALL INSTALL ALL FRAMES SO AS TO PROVIDE A SMOOTH SURFACE FOR VEHICULAR AND/OR PEDESTRIAN TRAFFIC.
31. CONTRACTOR SHALL CONFIRM PROPOSED TOP OF CASTING (TC) ELEVATIONS WILL ALLOW POSITIVE DRAINAGE TO PROPOSED INLETS. IF POSITIVE DRAINAGE DOES NOT EXIST, CONTRACTOR TO COORDINATE WITH ENGINEER OF RECORD FOR SOLUTION AND ADJUST PROPOSED INLETS AS NECESSARY AT NO COST.
32. CONTRACTOR SHALL CONFIRM ELEVATION OF EXISTING GRADE PRIOR TO PLACING DRAINAGE OUTFALL STRUCTURES. CONTRACTOR SHALL NOTIFY ENGINEER OF RECORD IF EXISTING GRADE DOES NOT MATCH PROPOSED OUTFALL INVERT. CONTRACTOR SHALL ADJUST OUTFALL STRUCTURE INVERT AND/OR STRUCTURE LOCATION AS DIRECTED BY ENGINEER OF RECORD AT NO COST.
33. ANY DRAINAGE PROBLEMS CREATED BY CONSTRUCTION, OR EXISTING BEFORE CONSTRUCTION AND NOT ALLEVIATED, SHOULD BE BROUGHT TO THE ATTENTION OF THE ENGINEER OF RECORD AT THE TIME OF DISCOVERY.
34. ALL STORMWATER PIPES, INLETS AND STORMWATER FACILITY BOTTOM SHALL BE CLEANED OF DEBRIS AND ERODED MATERIALS AT LAST STAGES OF AND PRIOR TO COMPLETION OF CONSTRUCTION.

GENERAL NOTES

35. SPECIAL ATTENTION IS DIRECTED TO THE FACT THAT PORTIONS OF SOME DRAINAGE STRUCTURES MAY EXTEND INTO THE STABILIZED PORTION OF THE ROADBED. EXTREME CAUTION WILL BE NECESSARY DURING COMPACTION AND STABILIZATION OPERATIONS AT THESE LOCATIONS TO AVOID DAMAGE AND ACHIEVE THE REQUIRED COMPACTION.
36. DURING CONSTRUCTION, AN ALL-WEATHER ACCESSIBLE ROADWAY SHALL BE MAINTAINED AT ALL TIMES FOR FIRE ACCESS.
37. ALL REQUIRED FIRE LINES & HYDRANTS SHALL BE INSTALLED IN ACCORDANCE WITH LOCAL & STATE REQUIREMENTS AND OPERATIONAL PRIOR TO THE START OF VERTICAL CONSTRUCTION.
38. NONE OF THE EXISTING LIMEROCK BASE THAT IS REMOVED IS TO BE USED IN THE CONSTRUCTION OF THE NEW LIMEROCK BASE UNLESS OTHERWISE NOTED ON PLANS.
39. EXISTING DRIVEWAYS WITHIN THE LIMITS OF THIS PROJECT ARE TO BE REPLACED AT THE SAME LOCATION AND WIDTH WITH THE SAME TYPE OF MATERIAL, UNLESS OTHERWISE SHOWN IN THE PLANS.
40. ALL RAMPS, SIDEWALKS AND ACCESSIBLE ROUTES ARE TO BE IN COMPLIANCE WITH CURRENT A.D.A. REQUIREMENTS.
41. SIGNS THAT ARE REMOVED AND ARE TO BE RELOCATED SHALL BE STOCK PILED BY THE CONTRACTOR. ANY EXISTING SIGNS DAMAGED DURING CONSTRUCTION SHALL BE REPLACED BY THE CONTRACTOR AT HIS COST.
42. ROADWAY AND PARKING SIGNAGE AND MARKINGS SHALL BE IN CONFORMANCE WITH THE MANUAL OF UNIFORM TRAFFIC CONTROL DEVICES, CURRENT EDITION.
43. UNLESS OTHERWISE NOTED, PROPOSED GRADES SHOWN ARE FINISHED GRADES.
44. OPERATION AND MAINTENANCE OF THE STORMWATER SYSTEM WILL BE PROVIDED BY THE OWNER OF PROPERTY. MAINTENANCE IS TO INCLUDE BI-WEEKLY MOWING OF SIDE SLOPES FOR VEGETATION CONTROL AND MONTHLY INSPECTION/CLEANING OF CULVERTS & STORM SYSTEMS.
45. ALL DISTURBED AREAS SHALL BE SODDED, UNLESS OTHERWISE SHOWN, AND SHALL HAVE SOD/ VEGETATED COVER ESTABLISHED PRIOR TO THE FINAL INSPECTION.
46. INSTALLATION OF THE REQUIRED STREET SIGNS, TRAFFIC SIGNS, PAVEMENT STRIPING, STREET LIGHTS AND SIDEWALKS ALONG WITH THE PAINTING OF THE FIRE HYDRANTS MUST BE COMPLETED PRIOR TO THE FINAL INSPECTION.
47. CONTRACTOR IS RESPONSIBLE FOR INSPECTING AND PRE-TESTING PRIOR TO SCHEDULING A TEST OR WALK-THROUGH WITH THE UTILITY REPRESENTATIVES, MUNICIPAL REPRESENTATIVES AND ENGINEER OF RECORD. ANY COST ASSOCIATED WITH RETESTING SHALL BE PAID FOR BY THE CONTRACTOR.
48. THE ENGINEER OF RECORD AND LOCAL UTILITY SHALL BE GIVEN SEVENTY-TWO (72) HOURS NOTICE OF ALL REQUESTED MEETINGS AND/OR TESTING MEASURES.
49. CONTRACTOR SHALL BE RESPONSIBLE TO COORDINATE WITH THE REGULATORY REPRESENTATIVES TO DETERMINE THE INSPECTIONS NEEDED FOR THE PROJECT. CONTRACTOR SHALL PROVIDE PROPER NOTIFICATION TO INSPECTING AUTHORITIES BEFORE AND DURING CONSTRUCTION.
50. ZEV COHEN AND ASSOCIATES, INC (ZCA) LIABILITY SHALL BE LIMITED TO THE COMPANY'S DESIGN OF SPECIFIC IMPROVEMENTS AS DEPICTED ON THE SITE INFRASTRUCTURE CONSTRUCTION DOCUMENTS. FOR RESIDENTIAL SUBDIVISION DESIGN, ZCA SHALL NOT BE RESPONSIBLE OR HELD LIABLE FOR, EITHER LOT OR HOME IMPROVEMENTS PROPOSED TO BE CONSTRUCTED (OR ACTUALLY CONSTRUCTED) BY OTHERS AND/OR IMPROVEMENTS CONSTRUCTED AFTER CERTIFICATION OF COMPLETION OF THE SITE INFRASTRUCTURE. LOT IMPROVEMENTS INCLUDING, BUT NOT LIMITED TO, VERTICAL HOME CONSTRUCTION, INDIVIDUAL LOT DRAINAGE, GARAGES, DRIVEWAYS, SIDEWALKS, PATIOS, PORCHES, POOLS, POOL DECKS, SITTING AREAS, RETAINING WALLS, ETC. DESIGNED OR CONSTRUCTED BY THE HOMEBUILDER, HOMEOWNER, HOA, CONTRACTORS OR OTHER DESIGN PROFESSIONALS, NOT EMPLOYED BY ZCA, SHALL NOT BE THE RESPONSIBILITY OF ZCA.

R:\22119 MCGRAY HERBERT STREET PROPERTY – P.O\FINAL ENGINEERING PLANS\CADDWGS\22119–NOT.DWG – PRINTED 5/31/2023 9:02 AM

ZEV COHEN
& ASSOCIATES, INC.
300 INTERCHANGE BLVD., STE. C
ORMOND BEACH, FL 32174
WWW.ZEVCOHEN.COM

CIVIL ENGINEERING
LANDSCAPE ARCHITECTURE
ENVIRONMENTAL
PLANNING
TRANSPORTATION

(EB 4516) (LC 62)

NO.	DATE	BY	SUBMITTALS / REVISIONS
1	03-24-23	MT	REVISED PER CITY COMMENTS
2	04-24-23	MT	REVISED PER CITY AND DISTRICT COMMENTS
3	05-01-23	KR/TR	REVISED PER CITY AND COUNTY COMMENTS DATED 04-19-2023

COASTAL OAKS
FINAL ENGINEERING PLANS
CONSTRUCTION NOTES

CITY OF PORT ORANGE
VOLUSIA COUNTY, FLORIDA

PROJECT NO: ZC 22119
DESIGNED BY: BB
DRAFTED BY: MT
CHECKED BY: BB
DRAWING FILE: 22119-NOT

Know what's below.
Call before you dig.

ROBERT J. BALL LICENSE No PE60001 STATE OF FLORIDA PROFESSIONAL ENGINEER

Digitally signed by Robert J Ball
DN: CN=Robert J Ball, dnQualifier=A01410D00000184CE569AA8000AC4E9, O=ZEV COHEN AND ASSOCIATES INC., C=US
Date: 2023.05.31 09:21:13-04'00'

ROBERT J. BALL, P.E., NO.60001
NOT VALID WITHOUT SEAL

SHEET: C2 OF 15

1. WATER DISTRIBUTION SYSTEM SHALL BE DESIGNED TO COMPLY WITH THE CITY'S LATEST FIRE/WATER FLOW CODE. ALL DEDICATED FIRE LINES SHALL BE INDEPENDENT OF ALL OTHER DOMESTIC WATER SERVICES.
2. ALL SINGLE AND DOUBLE RESIDENTIAL WATER SERVICES SHALL BE ENDOT ENDOPURE 1". COMMERCIAL SERVICES SHALL BE 1" OR 2" - NO 1-1/2" SERVICES ARE ALLOWED. POLYETHYLENE TUBING SHALL BE USED, IN ACCORDANCE WITH THE FOLLOWING SPECIFICATIONS:
   A. POLYETHYLENE TUBING SHALL BE CTS 3408 HIGH DENSITY TUBING, BLUE IN COLOR, AND RATED FOR A MINIMUM OF 200 PSI WITH SDR OF 9 (CTS)
   B. THE TUBING SHALL COME WITH A LIFETIME WARRANTY
   C. THE TUBING SHALL HAVE A VIRGIN HIGH DENSITY POLYETHYLENE CENTER FOR WHICH THE MANUFACTURER SHALL FURNISH A CERTIFICATE OF PURITY
   D. THE TUBING SHALL HAVE UV PROTECTION AND SHALL NOT BE AFFECTED BY DIRECT SUNLIGHT. THE TUBING SHALL COMPLY WITH OR EXCEED THE APPLICABLE STANDARDS OF ASTM D1248, D3350, D2239, D2737, NSF 14 AND AWWA C901
3. WATER SERVICES SHALL BE NORMALLY DOUBLE 1" SERVICES LOCATED AT SIDE LOT LINES. AT LOCATIONS WHERE SERVICES NEED TO BE OFFSET, SUCH AS AT FIRE HYDRANTS, FPL TRANSFORMERS, ETC., 1" SINGLE SERVICES SHALL BE SPECIFIED. THESE SERVICES MAY BE OFFSET A MAXIMUM OF 2' FROM SIDE LOT LINES.
4. APPROVED WATER VALVE TYPES ARE THE FOLLOWING:
   - RESILIENT SEATED GATE VALVES EQUAL TO OR LESS THAN 24” DIAMETER, PER AWWA C-515
   - BUTTERFLY VALVES GREATER THAN 24” DIAMETER, PER AWWA C-504
   - TAPPING VALVES WITH MECHANICAL TAPPING SLEEVE
5. WATER VALVES SHALL BE PLACED AT ALL STREET INTERSECTIONS AND AT MAXIMUM SPACINGS OF 1,000’.
6. AT ALL WATER MAIN TEES AND CROSSES, VALVES SHALL BE INSTALLED ON ALL LEGS EXCEPT ONE.
7. WATER MAINS SHALL BE C-900 PVC, BLUE IN COLOR, OR DIP PRESSURE CLASS 350 STANDARD CEMENT LINED UNLESS OTHERWISE APPROVED BY THE CITY. WATER MAINS 10” OR GREATER SHALL BE DIP.
8. PVC FITTINGS 4-INCH THROUGH 36-INCH SHALL BE PVC (OR DIP WITH PROTECTO 401) INJECTION-MOLDED OR FABRICATED AS SPECIFIED, MADE OF MATERIALS MEETING OR EXCEEDING THE REQUIREMENTS OF CELL CLASS 12454-B MATERIAL AS DEFINED IN ASTM D1784. FABRICATED FITTINGS SHALL BE MANUFACTURED WITH PIPE THAT MEETS OR EXCEEDS AWWA C-905 STANDARD, AND SHALL BE FIBERGLASS REINFORCED TO A PRESSURE RATING OF 165 PSI. ALL PVC OR MECHANICAL JOINT FITTINGS MUST COMPLY WITH OR EXCEED ANSI/AWWA C907, UNI-B-14 STANDARDS AS THEY APPLY TO THE APPROPRIATE SIZE RANGE AND METHOD OF MANUFACTURE.
9. ALL HDPE PIPE UTILIZED FOR WATER, FORCE MAIN AND/OR RECLAIMED WATER MAIN EXTENSIONS SHALL BE SDR 11 WITH #10 COPPERHEAD TRACER WIRE UNLESS SPECIFICALLY NOTED OTHERWISE. THE HDPE PIPE SHALL BE SIZED TO MATCH THE EXTERNAL DIAMETER OF THE PVC OR DIP PIPE TO WHICH IT IS ATTACHED.
10. ALL VALVES 2" AND LARGER SHALL BE S RESILIENT SEATED GATE VALVES (CORP STOPS ARE NOT ACCEPTABLE).
11. MEGALUGS, BOLTLESS RESTRAINED JOINTS OR GRIPPER GASKETS SHALL BE USED ON ALL RESTRAINED JOINT INSTALLATIONS. MINIMUM DEPTH OF BURY ON PIPES NOT MEETING REQUIRED COVER REQUIREMENTS SHALL FOLLOW THE MOST RECENT DIPRA THRUST RESTRAINT DESIGN GUIDELINES USING TORQUE WRENCHES PER MANUFACTURERS RECOMMENDATION.
12. WATER MAINS SHALL HAVE A MINIMUM COVER OF 36 INCHES AND A MAXIMUM DEPTH OF 48 INCHES FROM FINAL GRADE. CONFLICT LOCATIONS OR SPECIAL CIRCUMSTANCES NOT MEETING THESE REQUIREMENTS MAY BE APPROVED WHEN IT IS DETERMINED TO BE IN THE BEST INTEREST OF THE CITY.

CITY OF PORT ORANGE 1867 FLORIDA

STANDARD CONSTRUCTION DETAIL
POTABLE WATER DESIGN NOTES

FILE NAME
W1.DOC

DETAIL REF:
W-1

REV. 12/18

13. WATER MAINS SHALL BE INSTALLED APPROXIMATELY 4’ OFF THE BACK OF CURB OR AS APPROVED BY THE CITY. FOR CONSTRUCTION PURPOSES, THE PLANS SHALL DIMENSION THE PROPOSED LOCATIONS OF ALL WATER MAINS MEASURED FROM THE BACK OF CURB (OR EDGE OF PAVEMENT, IF NO CURB IS USED).
14. 3" METALLIZED PIPE LOCATION TAPE SHALL BE LOCATED BETWEEN 15" AND 24" BELOW FINISHED GRADE OR AS SPECIFIED BY MANUFACTURER FOR ALL PVC LINES. MARKER TAPE SHALL BE USED ON ALL DUCTILE IRON PIPE, AS WELL.
15. LANDSCAPE PLANS SHALL CLEARLY DEPICT THE DESIGN LOCATION OF PLANTINGS RELATIVE TO THE LOCATION OF PUBLIC UTILITIES AND STORMWATER INFRASTRUCTURE IN ORDER TO EVALUATE POTENTIAL CONFLICTS.
16. THE FIRE DEPARTMENT CONNECTION (FDC) FOR BUILDINGS WITH A FIRE PROTECTION SPRINKLER SYSTEM MUST BE WITHIN 50’ OF UNOBSTRUCTED PATH TO A FIRE HYDRANT LOCATION APPROVED BY THE FIRE MARSHALL AND/OR PUBLIC UTILITIES ENGINEER.
17. A MINIMUM OF ONE FIRE HYDRANT SHALL BE LOCATED AT EVERY INTERSECTION. OTHER FIRE HYDRANTS SHALL BE LOCATED SO AS TO PRODUCE A MAXIMUM 250’ FEET AND/OR MEETING THE LATEST NFPA CODE HOSE LAY REQUIREMENT ALONG THE STREET FOR ALL RESIDENTIAL BUILDINGS. FIRE HYDRANTS MAY NOT BE INSTALLED WITHIN 20' OF ANY ELECTRICAL TRANSFORMER.
18. NEW OR RELOCATED, UNDERGROUND MAINS SHALL BE LAID TO PROVIDE THE FOLLOWING MINIMUM HORIZONTAL SEPARATIONS (OUTSIDE TO OUTSIDE):

	WATER	STORM GRAVITY	STORM FORCE	RECLAIM	SANITARY GRAVITY	SANITARY FORCE
WATER		3'	3'	3'	6', PREFERRED 10'	6', PREFERRED 10'
STORM GRAVITY	3'		3'	3'	6', PREFERRED 10'	6', PREFERRED 10'
STORM FORCE	3'	3'		3'	6', PREFERRED 10'	6', PREFERRED 10'
RECLAIM	3'	3'	3'		6', PREFERRED 10'	6', PREFERRED 10'
SANITARY GRAVITY	6', PREFERRED 10'	6', PREFERRED 10'	6', PREFERRED 10'	6', PREFERRED 10'		6', PREFERRED 10'
SANITARY FORCE	6', PREFERRED 10'	6', PREFERRED 10'	6', PREFERRED 10'	6', PREFERRED 10'	6', PREFERRED 10'	

19. A 3’ MINIMUM HORIZONTAL SEPARATION BETWEEN THE WATER AND SANITARY GRAVITY MAINS SHALL BE ALLOWED WHEN THE WATER MAIN IS INSTALLED IN A SEPARATE TRENCH OR ON AN UNDISTURBED EARTH SHELF AT LEAST 6" ABOVE THE SANITARY GRAVITY MAIN.

CITY OF PORT ORANGE 1867 FLORIDA

STANDARD CONSTRUCTION DETAIL
POTABLE WATER DESIGN NOTES
(CONTINUED)

FILE NAME
W1.DOC

DETAIL REF:
W-1.1

REV. 12/18

20. NEW OR RELOCATED, UNDERGROUND MAINS SHALL BE LAID TO PROVIDE THE FOLLOWING MINIMUM CROSSING/VERTICAL SEPARATIONS (OUTSIDE TO OUTSIDE):

	WATER	STORM GRAVITY	STORM FORCE	RECLAIM	SANITARY GRAVITY	SANITARY FORCE
WATER		OVER STORM GRAVITY 6", PREFERRED 12"	OVER STORM FORCE 12"	OVER RECLAIM 12"	OVER SANITARY GRAVITY 6", PREFERRED 12"	OVER SANITARY FORCE 12"
		UNDER STORM GRAVITY 12"	UNDER STORM FORCE 12"	UNDER RECLAIM 12"	UNDER SANITARY GRAVITY 12"	UNDER SANITARY FORCE 12"
STORM GRAVITY	OVER WATER 12"		OVER STORM FORCE 6"	OVER RECLAIM 6", PREFERRED 12"	OVER SANITARY GRAVITY 6", PREFERRED 12"	OVER SANITARY FORCE 6", PREFERRED 12"
	UNDER WATER 6", PREFERRED 12"		UNDER STORM FORCE 6”	UNDER RECLAIM 12"	UNDER SANITARY GRAVITY 12”	UNDER SANITARY FORCE 12"
STORM FORCE	OVER WATER 12"	OVER STORM GRAVITY 6”		OVER RECLAIM 12"	OVER SANITARY GRAVITY 12"	OVER SANITARY FORCE 12"
	UNDER WATER 12"	UNDER STORM GRAVITY 6"		UNDER RECLAIM 12"	UNDER SANITARY GRAVITY 12"	UNDER SANITARY FORCE 12"
RECLAIM	OVER WATER 12"	OVER STORM GRAVITY 12”	OVER STORM FORCE 12"		OVER SANITARY GRAVITY 12"	OVER SANITARY FORCE 12"
	UNDER WATER 12"	UNDER STORM GRAVITY 6”, PREFERRED 12”	UNDER STORM FORCE 12"		UNDER SANITARY GRAVITY 12"	UNDER SANITARY FORCE 12"
SANITARY GRAVITY	OVER WATER 12"	OVER STROM GRAVITY 12"	OVER STORM FORCE 12"	OVER RECLAIM 12"		OVER SANITARY FORCE 12"
	UNDER WATER 6", PREFERRED 12"	UNDER STORM GRAVITY 6”, PREFERRED 12"	UNDER STORM FORCE 12"	UNDER RECLAIM 12"		UNDER SANITARY FORCE 12"
SANITARY FORCE	OVER WATER 12"	OVER STORM GRAVITY 12"	OVER STORM FORCE 12"	OVER RECLAIM 12"	OVER SANITARY GRAVITY 12"	
	UNDER WATER 12"	UNDER STORM GRAVITY 6”, PREFERRED 12"	UNDER STORM FORCE 12"	UNDER RECLAIM 12"	UNDER SANITARY GRAVITY 12"	

CITY OF PORT ORANGE 1867 FLORIDA

STANDARD CONSTRUCTION DETAIL
POTABLE WATER DESIGN NOTES
(CONTINUED)

FILE NAME
W1.DOC

DETAIL REF:
W-1.2

REV. 12/18

1. THE CITY'S PUBLIC UTILITIES DEPARTMENT (386) 506-5750 SHALL BE GIVEN A MINIMUM OF 2 BUSINESS DAYS ADVANCE NOTICE (NOT INCLUDING HOLIDAYS OR WEEKENDS) PRIOR TO BEGINNING ANY POTABLE WATER SYSTEM CONSTRUCTION.
2. ALL WORK PERFORMED ON THE POTABLE WATER FACILITIES OWNED OR PROPOSED TO BE OWNED BY THE CITY SHALL BE CONSTRUCTED BY A STATE CERTIFIED UNDERGROUND UTILITY CONTRACTOR OR GENERAL CONTRACTOR LICENSED IN THE STATE OF FLORIDA AND REGISTERED WITH THE CITY.
3. NEWLY CONSTRUCTED POTABLE WATER SYSTEM EXTENSIONS MAY NOT BE USED PRIOR TO FINAL TESTING, CLEARANCE AND ACCEPTANCE BY THE CITY OF PORT ORANGE. THIS INCLUDES CONSTRUCTION WATER REQUIRED FOR SEWER LINE CLEANING OR RELATED USES.
4. ALL TAPPING OF MAINS SHALL BE PERFORMED BY THE CITY AND BILLED IN ACCORDANCE WITH THE ADOPTED FEE RESOLUTION. SCHEDULING OF THESE CONNECTIONS OR TAPPINGS SHALL REQUIRE A MINIMUM OF 2 BUSINESS DAYS, DIRECTED TO THE CITY'S DESIGNATED SITE INSPECTOR WHO SHALL COORDINATE THE WORK DIRECTLY WITH THE PUBLIC UTILITIES DEPARTMENT. SUBSEQUENTLY, THE CONNECTION SHALL BE SCHEDULED TO COMMENCE BETWEEN 8:00 A.M. AND NOON ON THE APPROPRIATE DAY.
5. CONTRACTOR SHALL PREPARE A SAFE, SECURE AND DRY EXCAVATION FOR THE TAPPING OF MAINS BY THE CITY. THE BOTTOM OF THE EXCAVATION SHALL HAVE A MINIMUM OF 6” THICK BEDDING OF #57 STONE. ALL EXCAVATIONS GREATER THAN 5 FEET IN DEPTH SHALL COMPLY WITH THE TRENCH SAFETY ACT.
6. THE CITY RESERVES THE RIGHT TO REQUIRE TIE-IN CONNECTIONS TO BE PERFORMED DURING PERIODS OF LOW FLOW (MIDNIGHT TO 6:00 A.M.) IN ORDER TO MINIMIZE SERVICE DISRUPTION TO EXISTING CUSTOMERS. THE INSTALLATION OF LINE STOPPING DEVICES ON PRESSURE MAIN (POTABLE WATER, RECLAIM WATER AND SANITARY FORCE MAINS) MAY BE REQUIRED ON ANY REQUESTED UTILITY OUTAGE AT THE DISCRETION OF PUBLIC UTILITIES DEPARTMENT TO MINIMIZE INTERRUPTION TO EXISTING UTILITY CUSTOMERS.
7. ALL METERS SHALL BE PROVIDED BY THE CITY IN ACCORDANCE WITH THE ADOPTED FEE RESOLUTION. METERS AND VAULTS FOR METERS 2” OR LESS WILL BE PROVIDED AND INSTALLED BY THE CITY. METERS 4” OR GREATER WILL BE PROVIDED BY THE CITY AND INSTALLED BY THE OWNER/DEVELOPER/CONTRACTOR. ALL UNDERGROUND VAULTS FOR METERS 4” OR GREATER WILL BE PROVIDED AND INSTALLED BY THE OWNER/DEVELOPER/CONTRACTOR. NOTE: LARGE COMMERCIAL RECLAIMED WATER METERS GREATER THAN 4" TAKE A MINIMUM OF 6 WEEKS FOR DELIVERY AFTER FEES ARE PAID TO THE CITY.
8. DEWATERING SHALL BE PROVIDED TO KEEP GROUNDWATER ELEVATION A MINIMUM OF 6 INCHES BELOW WATER MAIN BEING LAID.
9. ALL WATER MAINS SHALL BE LAID ON A FIRM FOUNDATION WITH ALL UNSUITABLE MATERIAL (MUCK, ROCK, COQUINA, ETC.) REMOVED AND REPLACED WITH CLEAN GRANULAR MATERIAL.
10. TRENCHES SHALL BE BACKFILLED WITH MATERIAL ACCEPTABLE TO THE CITY WITH A MINIMUM COMPACTION OF 98% IN PAVED AREAS AND 95% IN UNPAVED AREAS IN ACCORDANCE WITH AASHTO T-180.
11. IT SHALL BE THE CONTRACTORS RESPONSIBILITY TO ENSURE THAT TRENCH COMPACTION TESTS BE PROVIDED AT POINTS 1 FOOT ABOVE THE PIPE AND AT 1 FOOT VERTICAL INTERVALS TO FINISH GRADE, AT A MINIMUM SPACING OF EVERY 300 FEET.
12. ALL PVC PIPE SHALL BE STORED IN SUCH A WAY AS TO PREVENT WARPING, DEFLECTION, OR ANY DEFORMATION.
13. NO USED, RE-USED, RUSTED, SECOND HAND, OR ANY MATERIAL THAT IS NOT NEW SHALL BE USED IN ANY UTILITY IMPROVEMENT PROJECTS WITHIN THE CITY'S SERVICE AREA.
14. ALL POTABLE WATER MAINS SHALL USE A THRUST RESTRAINT JOINT METHOD IN COMPLIANCE WITH THE DUCTILE IRON PIPE RESEARCH ASSOCIATION (DIPRA) GUIDELINES. IN THE EVENT THAT PVC PIPE IS SPECIFIED, THE RESTRAINT JOINT SHALL BE MODIFIED IN ACCORDANCE WITH THE RECOMMENDED ADDITIONAL RESTRAINT LENGTH REQUIRED FOR PIPE WRAPPED WITH POLYETHYLENE.

CITY OF PORT ORANGE 1867 FLORIDA

STANDARD CONSTRUCTION DETAIL
POTABLE WATER CONSTRUCTION NOTES

FILE NAME
W2.DOC

DETAIL REF:
W-2

REV. 12/18

15. AT THE UTILITY CROSSINGS, ONE FULL LENGTH OF WATER MAIN PIPE SHALL BE CENTERED ABOVE OR BELOW THE OTHER PIPELINE SO THE WATER MAIN JOINTS WILL BE AS FAR AS POSSIBLE FROM THE OTHER PIPELINE. ALTERNATIVELY, AT SUCH CROSSINGS, THE PIPES SHALL BE ARRANGED SO THAT ALL WATER MAIN JOINTS ARE AT LEAST THREE FEET FROM ALL JOINTS IN VACUUM-TYPE SANITARY SEWERS, STORM SEWERS, STORMWATER FORCE MAINS OR PIPELINES CONVEYING RECLAIMED WATER REGULATED UNDER PART III OF CHAPTER 62-610 FAC AND AT LEAST SIX FEET FROM ALL JOINTS IN GRAVITY- OR PRESSURE-TYPE SANITARY SEWERS, WASTEWATER FORCE MAINS, OR PIPELINES CONVEYING RECLAIMED WATER NOT REGULATED UNDER PART III OF CHAPTER 62-610, FAC.
16. ALL WATER SERVICE ENDINGS SHALL BE MARKED WITH A 2"X 4" LUMBER (PRESSURE TREATED) EXTENDING 4 FEET ABOVE GRADE, WITH WATER SERVICES SECURED 12" MAXIMUM ABOVE THE GROUND. ALL SERVICES SHALL BE LOCKED AT THE TIME OF FINAL INSPECTION BY THE CONTRACTOR IN THE PRESENCE OF THE CITY INSPECTOR OR CITY PERSONNELL, AFTER THEY HAVE BEEN INSPECTED AND VERIFIED TO OPERATE PROPERLY.
17. ALL WATER VALVES SHALL BE ADJUSTED TO FINISHED GRADE AND THE CAPS PAINTED BLUE TO MAKE THEM PLAINLY VISIBLE.
18. WATER SYSTEMS SHALL BE PRESSURE TESTED AT 150 PSI STATIC PRESSURE FOR A PERIOD OF 2 HOURS PER AWWA STANDARDS.
19. IN AREAS WHERE RECLAIMED WATER IS NOT AVAILABLE THE CONTRACTOR SHALL BE REQUIRED TO (UPON SATISFACTORY COMPLETION OF THE PRESSURE TEST) TRANSFER THE WATER FROM THE POTABLE WATER LINES TO THE RECLAIMED WATER LINES FOR UTILIZATION IN THEIR PRESSURE TEST.
20. THE CONTRACTOR SHALL BE REQUIRED TO PIG ALL POTABLE MAINS 6” AND LARGER IN DIAMETER AND PRIMARY DISTRIBUTION MAINS LOCATED ON COLLECTOR AND ARTERIAL ROADWAYS. ALL PIGS SHALL BE NEW. NO FOAM PIGS ARE ALLOWED. LAUNCHING AND EXTRACTION POINTS SHALL BE DETERMINED BY THE CONTRACTOR. ALL PIGGING OPERATIONS SHALL BE WITNESSED BY A PUBLIC UTILITIES REPRESENTATIVE OR A CITY UTILITY INSPECTOR
21. ALL PROPOSED POTABLE WATER MAINS SHALL BE FLUSHED, DISINFECTED, PRESSURE TESTED AND BACTERIOLOGICALLY CLEARED FOR SERVICE WHEN APPROPRIATE IN ACCORDANCE WITH THE LATEST AWWA STANDARDS AND THE FLORIDA DEPARTMENT OF ENVIRONMENTAL PROTECTION REQUIREMENTS. THE CONTRACTOR SHALL NOTIFY THE CITY'S DESIGNATED SITE INSPECTOR WHO SHALL COORDINATE WITH CITY PERSONNEL AT THE WATER TREATMENT PLANT AT LEAST 2 BUSINESS DAYS PRIOR TO BEGINNING FLUSH OF THE MAINS AND PRIOR TO THE COMMENCEMENT OF PRESSURE TESTING.
22. THE PHYSICAL TAKING OF WATER SAMPLE FOR BACTERIOLOGICAL TESTING SHALL BE DONE BY THE CITY’S LABORATORY PERSONNEL. THE CONTRACTOR SHALL NOTIFY THE CITY’S DESIGNATED SITE INSPECTOR AT LEAST TWO BUSINESS DAY PRIOR TO NEEDING SAMPLES TAKEN TO COORDINATE WITH THE LABORATORY. ALL SAMPLING FORMS WILL BE COMPLETED BY THE CITY’S DESIGNATED LABORATORY PERSONNEL. THE CITY’S LABORATORY WILL CONDUCT THE TESTING IN ACCORDANCE WITH THE LATEST AWWA STANDARDS AND THE FLORIDA DEPARTMENT OF ENVIRONMENTAL PROTECTION REQUIREMENTS. THE RESULTS WILL BE FORWARDED TO THE CONTRACTOR AND ENGINEER OF RECORD. IF THE INITIAL DISINFECTION OR OTHER RESULTS INDICATE UNACCEPTABLE WATER QUALITY, THE MAIN SHALL BE RE-FLUSHED, RE-SAMPLED AND RE-TESTED. IF CHECK SAMPLES FAIL TO PRODUCE ACCEPTABLE RESULTS, THE CYCLE WILL BE REPEATED (FLUSH, CHLORINATE, SAMPLE, TEST, AND RE-FLUSH, RE-SAMPLE, RE-TEST, AS NEEDED) UNTIL SATISFACTORY RESULTS ARE OBTAINED.

CITY OF PORT ORANGE 1867 FLORIDA

STANDARD CONSTRUCTION DETAIL
POTABLE WATER CONSTRUCTION NOTES
(CONTINUED)

FILE NAME
W2.DOC

DETAIL REF:
W-2.1

REV. 12/18

23. WHEN THE PUBLIC UTILITIES OFFICE RECEIVES POTABLE WATER CLEARANCE REQUEST REQUIRING SIGNATURE, THE CITY'S DISTRIBUTION SUPERVISOR AND/OR DESIGNATED SITE INSPECTOR WILL BE CONTACTED TO INDEPENDENTLY VERIFY THAT THE SYSTEM IS IN PROPERLY FUNCTIONING ORDER (i.e. ALL VALVES, HYDRANTS, AND WATER SERVICES ARE ACCESSIBLE AND OPERABLE). SIMULTANEOUSLY, THE CITY MAY ALSO TAKE A RANDOM BACTERIOLOGICAL SAMPLE WITHIN THE NEW SYSTEM TO VERIFY THAT WATER IS SAFE FOR CONSUMPTION. ONCE THE DISTRIBUTION SUPERVISOR AND/OR DESIGNATED SITE INSPECTOR HAVE VERIFIED THAT THE SYSTEM IS IN PROPER FUNCTIONING ORDER AND THAT THE BACTERIOLOGICAL SAMPLE(S) INDICATE THE WATER IS SAFE FOR CONSUMPTION, THE PUBLIC UTILITIES OFFICE WILL THEN SIGN OFF ON THE WATER CLEARANCE REQUEST.
24. UPON CONSTRUCTION COMPLETION AND ACCEPTANCE OF THE SYSTEM, IT SHALL BE THE DESIGN ENGINEER'S RESPONSIBILITY TO ENSURE THAT THE SYSTEM IS PROPERLY CERTIFIED AND ACCEPTED BY THE DEPARTMENT OF HEALTH AND AS-BUILTS ARE PROVIDED TO THE CITY PRIOR TO ANY PUBLIC USE OF THIS SYSTEM.
25. UPON FINAL ACCEPTANCE OF NEW WATER SYSTEMS, WATER VALVES SHALL BE COMPLETELY OPENED BY PUBLIC UTILITIES PERSONNEL. AT NO TIME SHALL CONTRACTOR OPERATE ANY EXISTING VALVES.
26. ALL FIRE HYDRANTS SHALL BE LOCATED TO MAKE THEM EASILY ACCESSIBLE TO FIRE PERSONNEL IN CASE OF A FIRE. THE PRIMARY HYDRANT PORT SHALL ALWAYS FACE THE STREET. 5 FEET MINIMUM RADIUS CLEAR AREA AROUND THE FIRE HYDRANT SHALL BE MAINTAINED.
27. ALL WATER SERVICES SHALL BE MARKED WITH AN "/\" SAW CUT INTO THE CURB OR BY METAL TABS SET INTO THE PAVEMENT.
28. ALL WATER VALVES SHALL BE MARKED WITH AN "X" SAW CUT INTO THE CURB OR BY METAL TABS SET INTO THE PAVEMENT. BLOW-OFFS SHALL BE MARKED SIMILARLY, AS WELL. REVERSE TAPPING VALVE SHALL BE MARKED WITH AN "X ↑" SAW CUT INTO THE CURB OR PAVEMENT WITH THE ARROW POINTING TO THE DIRECTION OF THE PRESSURE MAIN RUN.

CITY OF PORT ORANGE 1867 FLORIDA

STANDARD CONSTRUCTION DETAIL
POTABLE WATER CONSTRUCTION NOTES
(CONTINUED)

FILE NAME
W2.DOC

DETAIL REF:
W-2.2

REV. 12/18

ZEV COHEN & ASSOCIATES, INC.
300 INTERCHANGE BLVD., STE. C
ORMOND BEACH, FL 32174
WWW.ZEVCOHEN.COM

CIVIL ENGINEERING
LANDSCAPE ARCHITECTURE
ENVIRONMENTAL
PLANNING
TRANSPORTATION
(EB 4516) (LC 62)

NO.	DATE	BY	SUBMITTALS / REVISIONS
1	03-24-23	MT	REVISED PER CITY COMMENTS
2	04-24-23	MT	REVISED PER CITY AND DISTRICT COMMENTS
3	05-01-23	KR/TR	REVISED PER CITY AND COUNTY COMMENTS DATED 04-19-2023

COASTAL OAKS
FINAL ENGINEERING PLANS
CONSTRUCTION NOTES

CITY OF PORT ORANGE
VOLUSIA COUNTY, FLORIDA

PROJECT NO: ZC 22119
DESIGNED BY: BB
DRAFTED BY: MT
CHECKED BY: BB
DRAWING FILE: 22119-NOT

811 Know what's below. Call before you dig.

ROBERT J. BALL LICENSE No PE60001 STATE OF FLORIDA PROFESSIONAL ENGINEER

Digitally signed by Robert J Ball
DN: CN=Robert J Ball, dnQualifier=A01410D00000184CE569AA8000AC4E9, O=ZEV COHEN AND ASSOCIATES INC., C=US
Date: 2023.05.31 09:21:14-04'00'

ROBERT J. BALL, P.E., NO.60001
NOT VALID WITHOUT SEAL

SHEET: C3 OF 15

THE CITY'S PUBLIC UTILITIES DEPARTMENT (386) 506-5750 SHALL BE GIVEN A MINIMUM OF 48 HOURS ADVANCE NOTICE (NOT INCLUDING HOLIDAYS OR WEEKENDS) PRIOR TO BEGINNING ANY SANITARY SEWER CONSTRUCTION.

CONSTRUCTION:

1. ALL WORK PERFORMED ON SANITARY SEWER FACILITIES OWNED OR PROPOSED TO BE OWNED BY THE CITY SHALL BE CONSTRUCTED BY AN UNDERGROUND UTILITY CONTRACTOR, OR FLORIDA LICENSED GENERAL CONTRACTOR REGISTERED WITH THE CITY.
2. THE PLANS SHALL DIMENSION THE LOCATION, OF ALL MAINS MEASURED FROM THE BACK OF CURB (OR EDGE OF PAVEMENT, IF NO CURBING EXISTS. LANDSCAPE PLANS SHALL CLEARLY DEPICT THE DESIGN LOCATION OF PLANTINGS RELATIVE TO THE LOCATION OF PROPOSED AND EXISTING PUBLIC UTILITIES AND STORMWATER INFRASTRUCTURE.
3. PROFILE VIEWS SHALL BE PROVIDED FOR ALL SEWER MAINS. PROFILE VIEWS SHALL BE ON THE SAME SHEET AS THE ASSOCIATED PLAN VIEW AND SHALL INCLUDE THE FOLLOWING INFORMATION:
   - A. SIZE, SLOPE, LENGTH AND CLASS OF PIPE
   - B. MANHOLE RIM AND INVERT ELEVATIONS
   - C. UTILITY CROSSINGS WITH VERTICAL SEPARATION
   - D. SHOW PROPOSED SEWER AND EXISTING UTILITY
   - E. EXISTING GROUND PROFILE
   - F. MATCH LINE
   - G. VICINITY MAP
   - H. PROFILE VIEW STATIONS TO COINCIDE WITH PLAN VIEW STATIONS
4. GREASE INTERCEPTORS ARE REQUIRED FOR ALL COMMERCIAL BUILDINGS HAVING KITCHEN, FOOD PREPARATION OR SERVING FACILITIES AND / OR MISCELLANEOUS USES. GREASE INTERCEPTORS CONSTRUCTED EXTERNAL TO BUILDINGS SHALL BE SIZED IN ACCORDANCE WITH FAC 64-E-6. CALCULATIONS TO DETERMINE SIZING REQUIREMENTS SHALL BE SUBMITTED AS PART OF BUILDING PERMITTING. AN INSPECTION MANHOLE MAY BE REQUIRED IMMEDIATELY DOWN STREAM OF THE GREASE INTERCEPTOR FOR INSPECTION PURPOSES, AS DEEMED APPROPRIATE BY THE CITY.
5. ON ALL EXCAVATION AND BACKFILLING, THE CONTRACTOR SHALL PROVIDE ADEQUATE SHEETING AND BRACING IN ACCORDANCE TO OSHA GUIDELINE IN ORDER TO PROVIDE FOR THE SAFETY OF WORKMEN, AS WELL AS REPRESENTATIVES OF THE CITY, THE DESIGN ENGINEER, AND THE DEVELOPER.
6. ALL PVC. PIPE SHALL BE STORED IN SUCH A WAY AS TO PREVENT WARPING, DEFLECTION, OR DEFORMATION. ANY PIPE DEEMED TO BE MISSHAPED IN ANY WAY FOR ANY REASON SHALL BE REJECTED.
7. NO USED, RE-USED, RUSTED, SECOND HAND, OR ANY MATERIAL THAT IS NOT NEW SHALL BE USED IN ANY UTILITY IMPROVEMENT PROJECTS WITHIN THE CITY SERVICE AREA.
8. THE CONTRACTOR SHALL AT ALL TIMES, DURING PIPE LAYING OPERATIONS DEWATER THE GROUND SUFFICIENTLY TO KEEP THE GROUNDWATER ELEVATION A MINIMUM OF 6" BELOW THE PIPE BEING LAID WITHIN THE AREA OF THE TRENCH.
9. ALL PIPES SHALL BE LAID ON A FIRM FOUNDATION. SOFT OR SPONGY BEDDING FOR PIPES IS NOT ACCEPTABLE. ANY UNSUITABLE MATERIAL SHALL BE REMOVED AND REPLACED WITH A DRY, COMPACTED, GRANULAR MATERIAL SATISFACTORY TO THE CITY. MORTAR TO CONTAIN "HYDRATITE" OR APPROVED EQUAL, TO PREVENT SHRINKAGE. CEMENT USED IN CONCRETE MIX FOR PRECAST STRUCTURES SHALL BE TYPE II, ACID RESISTANT AND SULFIDE RESISTANT CONCRETE.
10. MORTAR TO CONTAIN "HYDRATITE" OR APPROVED EQUAL, TO PREVENT SHRINKAGE. CEMENT USED IN CONCRETE MIX FOR PRECAST STRUCTURES SHALL BE TYPE II, ACID RESISTANT AND SULFIDE RESISTANT CONCRETE.

STANDARD CONSTRUCTION DETAIL
SANITARY SEWER NOTES

FILE NAME S1.DOC
DETAIL REF: S-1
REV. 12/18

11. THE CITY MAY REQUIRE ALL NEW SANITARY SEWER GRAVITY SYSTEMS TO BE SMOKE TESTED PRIOR TO FINAL ACCEPTANCE. ALL TESTING MUST BE DONE IN THE PRESENCE OF THE CITY'S DESIGNATED SITE INSPECTOR.
12. THE CITY OF PORT ORANGE RESERVES THE RIGHT TO REQUIRE THE DEVELOPER TO PERFORM VACUUM TESTING OF ALL SANITARY MANHOLES, AIR TEST SEWER MAINS, AND REQUIRES THAT ALL SANITARY SEWER MAIN LINES BE TELEVISED PRIOR TO FINAL ACCEPTANCE. LATERALS SHALL BE TELEVISED UPON DEMAND BY THE CITY PRIOR TO FINAL ACCEPTANCE WHEN IT IS SUSPECTED THAT A PROBLEM EXISTS.
13. ALL TAPPING OF PRESSURE MAINS AND CORING OF MANHOLES SHALL BE PERFORMED BY THE CITY AND BILLED IN ACCORDANCE WITH THE ADOPTED FEE RESOLUTION. SCHEDULING OF THESE CONNECTIONS SHALL REQUIRE A MINIMUM 48 HOURS NOTIFICATION DIRECTED TO THE CITY'S DESIGNATED SITE INSPECTOR WHO SHALL COORDINATE THE WORK DIRECTLY WITH THE PUBLIC UTILITIES DEPARTMENT. SUBSEQUENTLY, THE CONNECTION SHALL BE SCHEDULED TO COMMENCE BETWEEN 8:00 A.M. AND NOON ON THE APPROPRIATE DAY ESTABLISHED BY CITY. WITH RESPECT TO TIE-IN CONNECTIONS AND CORING OPERATIONS, THE CITY RESERVES THE RIGHT TO REQUIRE CONNECTIONS TO BE PERFORMED DURING PERIODS OF LOW FLOW (MIDNIGHT TO 6:00 A.M.) IN ORDER TO MINIMIZE SERVICE DISRUPTION TO EXISTING CUSTOMERS. CONTRACTORS HAVING EXPERIENCE AND PROPER EQUIPMENT MAY BE GRANTED PERMISSION TO CORE MANHOLE BY PUBLIC UTILITIES DEPARTMENT.
14. NEW OR RELOCATED, UNDERGROUND MAINS SHALL BE LAID TO PROVIDE THE FOLLOWING MINIMUM HORIZONTAL SEPARATIONS (OUTSIDE TO OUTSIDE):

	WATER	STORM GRAVITY	STORM FORCE	RECLAIM	SANITARY GRAVITY	SANITARY FORCE
WATER		3'	3'	3'	6', PREFERRED 10'	6', PREFERRED 10'
STORM GRAVITY	3'		3'	3'	6', PREFERRED 10'	6', PREFERRED 10'
STORM FORCE	3'	3'		3'	6', PREFERRED 10'	6', PREFERRED 10'
RECLAIM	3'	3'	3'		6', PREFERRED 10'	6', PREFERRED 10'
SANITARY GRAVITY	6', PREFERRED 10'	6', PREFERRED 10'	6', PREFERRED 10'	6', PREFERRED 10'		6', PREFERRED 10'
SANITARY FORCE	6', PREFERRED 10'	6', PREFERRED 10'	6', PREFERRED 10'	6', PREFERRED 10'	6', PREFERRED 10'	

15. A 3' MINIMUM HORIZONTAL SEPARATION BETWEEN THE SANITARY GRAVITY AND WATER MAINS SHALL BE ALLOWED WHEN THE WATER MAIN IS INSTALLED IN A SEPARATE TRENCH OR ON AN UNDISTURBED EARTH SHELF AT LEAST 6" ABOVE THE SANITARY GRAVITY MAIN. ALTERNATIVELY, THE 3' MINIMUM HORIZONTAL SEPARATION SHALL BE ALLOWED WHEN THE SEWER MAIN IS ENCASED WITH CONCRETE OR ENCLOSED IN A WATER TIGHT CARRIER PIPE OR UPGRADED TO PRESSURE RATED PVC PIPE (MEETING AWWA C-900 OR C-905 SPECIFICATION AND PRESSURE TESTED AT 150 PSI TO ASSURE WATER TIGHTNESS PRIOR TO BACKFILLING).

STANDARD CONSTRUCTION DETAIL
SANITARY SEWER NOTES
(CONTINUED)

FILE NAME S1.DOC
DETAIL REF: S-1.1
REV. 12/18

16. NEW OR RELOCATED, UNDERGROUND MAINS SHALL BE LAID TO PROVIDE THE FOLLOWING MINIMUM CROSSING/VERTICAL SEPARATIONS (OUTSIDE TO OUTSIDE):

	WATER	STORM GRAVITY	STORM FORCE	RECLAIM	SANITARY GRAVITY	SANITARY FORCE
WATER		OVER STORM GRAVITY 6", PREFERRED 12" UNDER STORM GRAVITY 12"	OVER STORM FORCE 12" UNDER STORM FORCE 12"	OVER RECLAIM 12" UNDER RECLAIM 12"	OVER SANITARY GRAVITY 6", PREFERRED 12" UNDER SANITARY GRAVITY 12"	OVER SANITARY FORCE 12" UNDER SANITARY FORCE 12"
STORM GRAVITY	OVER WATER 12" UNDER WATER 6", PREFERRED 12"		OVER STORM FORCE 6" UNDER STORM FORCE 6"	OVER RECLAIM 6", PREFERRED 12" UNDER RECLAIM 12"	OVER SANITARY GRAVITY 6", PREFERRED 12" UNDER SANITARY GRAVITY 12"	OVER SANITARY FORCE 6", PREFERRED 12" UNDER SANITARY FORCE 12"
STORM FORCE	OVER WATER 12" UNDER WATER 12"	OVER STORM GRAVITY 6" UNDER STORM GRAVITY 6"		OVER RECLAIM 12" UNDER RECLAIM 12"	OVER SANITARY GRAVITY 12" UNDER SANITARY GRAVITY 12"	OVER SANITARY FORCE 12" UNDER SANITARY FORCE 12"
RECLAIM	OVER WATER 12" UNDER WATER 12"	OVER STORM GRAVITY 12" UNDER STORM GRAVITY 6", PREFERRED 12"	OVER STORM FORCE 12" UNDER STORM FORCE 12"		OVER SANITARY GRAVITY 12" UNDER SANITARY GRAVITY 12"	OVER SANITARY FORCE 12" UNDER SANITARY FORCE 12"
SANITARY GRAVITY	OVER WATER 12" UNDER WATER 6", PREFERRED 12"	OVER STROM GRAVITY 12" UNDER STORM GRAVITY 6", PREFERRED 12"	OVER STORM FORCE 12" UNDER STORM FORCE 12"	OVER RECLAIM 12" UNDER RECLAIM 12"		OVER SANITARY FORCE 12" UNDER SANITARY FORCE 12"
SANITARY FORCE	OVER WATER 12" UNDER WATER 12"	OVER STORM GRAVITY 12" UNDER STORM GRAVITY 6", PREFERRED 12"	OVER STORM FORCE 12" UNDER STORM FORCE 12"	OVER RECLAIM 12" UNDER RECLAIM 12"	OVER SANITARY GRAVITY 12" UNDER SANITARY GRAVITY 12"	

STANDARD CONSTRUCTION DETAIL
SANITARY SEWER NOTES
(CONTINUED)

FILE NAME S1.DOC
DETAIL REF: S-1.2
REV. 12/18

17. SEWER LATERAL LOCATIONS SHALL BE MARKED ALONG THE OUTSIDE OF THE CURB WITH A SAW CUT "V", OR BY A METAL TAB SET INTO THE PAVEMENT.
18. THE CONTRACTOR SHALL INSTALL A METALLIZED FOIL LOCATOR TAPE, OR SIMILAR DEVICE AS MAY BE APPROVED BY THE CITY FOR THE FULL LENGTH OF ALL PVC SEWAGE FORCE MAINS. THIS PIPE LOCATOR AID SHALL BE INSTALLED BETWEEN 15" AND 24" BELOW FINISHED GRADE OR AS DIRECTED BY THE MANUFACTURER. TAPE SHALL BE COLOR CODED GREEN FOR SANITARY SEWER AND FORCE MAIN. A CONTINUOUS NO. 10 COPPER HEAD WIRE SHALL BE INSTALLED WITH WIRE BROUGHT UP AT ALL VALVES.

FORCE MAIN SANITARY SEWER:

1. PVC SANITARY SEWER FORCE MAINS, INCLUDING FITTINGS, SHALL BE GREEN PVC AWWA C-900, OR C-905, UNLESS SPECIFICALLY NOTED OTHERWISE. PRESSURE FITTINGS SHALL BE PRESSURE CLASS 150 OR C-907.
2. HDPE SANITARY SEWER FORCE MAINS SHALL BE SDR11 (OR THICKER) UNLESS SPECIFICALLY NOTED OTHERWISE. THE HDPE PIPE SHALL BE SIZED TO MATCH THE EXTERNAL DIAMETER OF THE PVC TO WHICH IT IS ATTACHED. PRESSURE FITTINGS SHALL BE PRESSURE CLASS 150 OR C-907.
3. ALL SANITARY SEWER FORCE MAINS SHALL USE A THRUST RESTRAINT JOINT METHOD IN COMPLIANCE WITH THE DUCTILE IRON PIPE RESEARCH ASSOCIATION GUIDELINES MODIFIED TO ACCOMMODATE PVC PIPE BY FOLLOWING THE RECOMMENDED INCREASE IN RESTRAINT LENGTH CORRESPONDING TO THE INSTALLATION OF POLYETHYLENE WRAP. IN NO INSTANCE SHALL THRUST BLOCKS BE PERMITTED.
4. ALL IN-LINE SANITARY SEWER FORCE MAIN VALVES SHALL BE AWWA C-509 OR C-515 COMPLIANT RESILIENT SEAT VALVES FEATURING AN EPOXY LINED DUCTILE IRON BODY.
5. FORCE MAIN SYSTEMS SHALL BE PRESSURE TESTED AT 100 PSI STATIC PRESSURE FOR A PERIOD OF 2 HOURS PER AWWA STANDARDS.
6. FORCE MAINS SHALL BE FLUSHED, PRESSURE TESTED, PIGGED AND CLEARED FOR SERVICE IN ACCORDANCE WITH THE LATEST AWWA STANDARDS AND THE FLORIDA DEPARTMENT OF ENVIRONMENTAL PROTECTION REQUIREMENTS. THE CONTRACTOR SHALL NOTIFY THE CITY'S DESIGNATED SITE INSPECTOR WHO SHALL COORDINATE WITH CITY PERSONNEL AT THE WATER OR WASTEWATER TREATMENT PLANT (AS APPROPRIATE) AT LEAST 48 HOURS PRIOR TO BEGINNING A FULL-DIAMETER FLUSH OF THE MAINS AND PRIOR TO THE COMMENCEMENT OF PRESSURE TESTING (SUBJECT TO AVAILABILITY).
7. THE CONTRACTOR SHALL BE REQUIRED TO PIG ALL FORCE MAINS AND PRIMARY TRANSMISSION MAINS LOCATED ON COLLECTOR AND ARTERIAL ROADWAYS. LAUNCHING AND EXTRACTION POINTS SHALL BE DETERMINED BY THE CONTRACTOR. ALL PIGGING OPERATIONS SHALL BE WITNESSED BY A PORT ORANGE REPRESENTATIVE.

GRAVITY SANITARY SEWER:

1. ALL GRAVITY SANITARY SEWER LINES IN PUBLIC RIGHTS-OF-WAY SHALL BE GREEN PVC SDR26, ASTM D-3034. SEWER LINES CONSTRUCTED OUTSIDE OF PUBLIC RIGHTS-OF-WAY, WITHIN SIDE YARDS, BACKYARDS, AND OTHER POORLY ACCESSIBLE AREAS SHALL BE CONSTRUCTED OF GREEN AWWA C-900 PVC SDR25. USE OF PLASTIC STYRENE FITTINGS SHALL NOT BE ALLOWED.
2. IN PLACES WHERE A MINIMUM COVER OF 36" CANNOT BE MAINTAINED, AWWA C-900 GREEN PVC SDR25 OR CONCRETE ENCASEMENT SHALL BE USED. WATER LINES, RECLAIMED LINES, AND STORM DRAINAGE CROSSINGS SHALL ALSO FOLLOW THE CONCRETE ENCASEMENT REQUIREMENT PER THESE STANDARDS AND AS PER REGULATORY REQUIREMENTS.
3. GRAVITY SANITARY SEWER PIPE SIZES SHALL BE:
   - MAINS - 8" DIAMETER MINIMUM
   - COMMERCIAL SERVICE LATERALS WITH MULTIPLE CONNECTIONS - 6" DIAMETER MINIMUM
   - SINGLE FAMILY RESIDENTIAL SERVICE LATERALS - 4" DIAMETER
   - MULTI-FAMILY RESIDENTIAL SERVICE LATERALS - 6" DIAMETER MINIMUM

STANDARD CONSTRUCTION DETAIL
SANITARY SEWER NOTES
(CONTINUED)

FILE NAME S1.DOC
DETAIL REF: S-1.3
REV. 12/18

4. SINGLE FAMILY RESIDENTIAL SERVICE LATERALS SHALL BE CONSTRUCTED AT EACH LOT OR UNIT AND LOCATED ON THE DOWNSTREAM SIDE OF THE LOT CENTER LINE. THESE SERVICES SHALL BE EXTENDED 48" ABOVE GROUND AT THE PROPERTY LINE WITH A PVC RISER AND PLUG BEING EASILY VISIBLE FROM THE ROAD. RUBBER SEAL FITTINGS SHALL BE USED ON ALL LINES. NO GLUED JOINTS ARE PERMITTED ON LATERALS.
5. GRAVITY SANITARY SEWER LINE CONSTRUCTION SHALL BE ACCOMPLISHED BY THE USE OF A LASER INSTRUMENT UNLESS ANOTHER METHOD IS PREVIOUSLY APPROVED BY THE CITY.
6. MINIMUM GRAVITY SANITARY SEWER SLOPES ARE AS FOLLOWS:
   - 8" PIPE - 0.40 %
   - 10" PIPE - 0.30 %
   - 12" PIPE - 0.22 %
7. GRAVITY SANITARY SEWER LINES SHALL BE INSTALLED WHENEVER POSSIBLE UNDER PAVED AREAS WITHIN PUBLIC RIGHTS-OF-WAY. UTILITY EASEMENTS SHALL BE PROVIDED WHENEVER PUBLICLY-OWNED SEWER LINES ARE CONSTRUCTED OUTSIDE OF A PUBLIC RIGHT-OF-WAY.
8. AS A GENERAL RULE, THE NUMBER OF JOINTS SHALL BE LIMITED WHENEVER POSSIBLE. IN SPECIAL CASES WHERE A POINT REPAIR TO AN 8" TO 12" PVC SEWER MAIN IS REQUIRED, THE PROPER RIGID WRAP AROUND SLEEVE SUCH AS A JCM-210 OVERSIZED DUCTILE IRON COUPLING OR AN APPROVED EQUAL MAY BE ALLOWED BY SPECIAL APPROVAL BY THE CITY.
9. SEWER MAINS SHALL BE FLUSHED, PRESSURE TESTED, PIGGED AND CLEARED FOR SERVICE IN ACCORDANCE WITH THE LATEST AWWA STANDARDS AND THE FLORIDA DEPARTMENT OF ENVIRONMENTAL PROTECTION REQUIREMENTS. THE CONTRACTOR SHALL NOTIFY THE CITY'S DESIGNATED SITE INSPECTOR WHO SHALL COORDINATE WITH CITY PERSONNEL AT THE WATER OR WASTEWATER TREATMENT PLANT (AS APPROPRIATE) AT LEAST 48 HOURS PRIOR TO BEGINNING A FULL-DIAMETER FLUSH OF THE MAINS AND PRIOR TO THE COMMENCEMENT OF PRESSURE TESTING (SUBJECT TO AVAILABILITY).
10. THE CONTRACTOR SHALL BE REQUIRED TO PIG ALL MAINS AND PRIMARY TRANSMISSION MAINS LOCATED ON COLLECTOR AND ARTERIAL ROADWAYS. LAUNCHING AND EXTRACTION POINTS SHALL BE DETERMINED BY THE CONTRACTOR. ALL PIGGING OPERATIONS SHALL BE WITNESSED BY A PORT ORANGE REPRESENTATIVE.

SANITARY MANHOLES:

1. STANDARD MANHOLES SHALL BE LOCATED AT INTERVALS NOT EXCEEDING 350'. SHOP DRAWINGS FOR ALL STRUCTURES SHALL BE SUBMITTED TO AND APPROVED BY THE DESIGN ENGINEER PRIOR TO INSTALLATION WITH TWO COPIES FORWARDED BY THE DESIGN ENGINEER TO THE CITY.
2. MAXIMUM DEPTH OF SANITARY MANHOLES SHALL BE 15'.
3. LOCAL COLLECTION SANITARY SEWER MANHOLES SHALL BE PRECAST WITH A MINIMUM INSIDE DIAMETER OF 48".
4. THICKER MANHOLE WALLS AND BASES MAY BE REQUIRED TO PREVENT FLOATATION BASED ON HIGH GROUND WATER TABLE ELEVATIONS AS DETERMINED USING ACCEPTED ENGINEERING PRACTICES AND/OR PUBLIC UTILITIES DEPARTMENT.
5. ALL SANITARY SEWER MANHOLES SHALL HAVE ALL INTERIOR SURFACES COATED WITH THREE (3) COATS OF WHITE/GRAY OVER RED OVER BLACK EW-1 EPOXY PAINT WITH A TOTAL OF 12 MILS THICKNESS OR BLACK COAL-TAR EPOXY WITH A TOTAL OF 16 MILS THICKNESS. OUTSIDE SURFACE TO BE COATED WITH TWO (2) COATS OF BLACK OVER BLACK EW-1 EPOXY PAINT WITH A TOTAL OF 8 MILS AND ONE (1) COAT OF BLACK COAL-TAR EPOXY WITH A TOTAL OF 8 MILS. ALL COATS SHALL BE APPLIED AT THE FACTORY EXCEPT MINOR FIELD TOUCH UP AT JOINTS AND AT MANHOLE NECK.
6. ALL MANHOLES CONSTRUCTED IN SIDE YARDS, BACKYARDS, AND EASEMENTS OUTSIDE OF THE RIGHT-OF-WAY SHALL BE OUTFITTED WITH FIBERGLASS OR EPOXY LINERS IN COMPLIANCE WITH ASTM-3753 OR OTHER TYPES OF LINERS APPROVED BY THE CITY. IN ADDITION, THE CITY MAY REQUIRE LINERS TO BE INSTALLED IN OTHER AREAS WHERE THE PUBLIC UTILITIES DEPARTMENT BELIEVES THE NEED IS JUSTIFIED SUCH AS IMMEDIATELY UPSTREAM OF FORCE MAINS CONNECTING TO GRAVITY MAINS.

STANDARD CONSTRUCTION DETAIL
SANITARY SEWER NOTES
(CONTINUED)

FILE NAME S1.DOC
DETAIL REF: S-1.4
REV. 12/18

7. MANHOLE RIMS SHALL MATCH FLUSH WITH THE FINISH GRADE ELEVATION IN PAVED AREAS AND A MINIMUM OF 0.2' AND MAXIMUM OF 0.5' ABOVE GRADE ELEVATION IN UNPAVED AREAS.
8. ALL SANITARY SEWER MANHOLE COVERS SHALL HAVE THE WORDS "PORT ORANGE FLORIDA SANITARY SEWER" CAST INTO THEM.
9. THE CONTRACTOR SHALL CONSTRUCT SANITARY SEWER MANHOLES IN SUCH A WAY THAT SEWER LINES DO NOT INTERSECT SEALED JOINTS BETWEEN SECTIONS OF THE MANHOLE.
10. NO BUG HOLES OR HONEYCOMB WILL BE ACCEPTED.
11. INDIVIDUAL SANITARY SERVICE ON NEW CONSTRUCTION SHALL NOT BE CONNECTED DIRECTLY INTO MANHOLES. THE SERVICE CONNECTION WILL BE BY USE OF WYE CONNECTIONS, UNLESS OTHERWISE APPROVED BY THE CITY.
12. RUBBER BOOTS WITH 316 STAINLESS STEEL BANDS SHALL BE UTILIZED IN THE CONNECTION OF THE SEWER MAIN TO THE MANHOLES. COMPLETELY COVER RUBBER BOOTS AT OUTSIDE CONNECTION AND SEAL INSIDE PROTRUSION WITH HYDRAULIC CEMENT.
13. EZ-WRAP PLASTIC, AS MANUFACTURED BY PRESS SEAL GASKET CORPORATION, SHALL BE USED ON THE OUTSIDE OF ALL MANHOLE AND WET WELL JOINTS. APPLY ONE LAYER OF 9" WRAP CENTERED ON EACH JOINT. A CITY INSPECTOR SHALL PERSONALLY INSPECT ALL JOINT SEALS PRIOR TO BACKFILLING OPERATIONS.

TESTING:

1. ALL TESTING REQUIRED BY THE CITY SHALL BE PAID FOR BY THE CONTRACTOR / DEVELOPER. THE CONTRACTOR SHALL EMPLOY AN INDEPENDENT TESTING LABORATORY AT HIS OWN EXPENSE.
2. TO ENSURE THAT COMPACTION OF ALL FILL MATERIAL IS COMPLETED PROPERLY, TESTS SHALL BE DONE 12" ABOVE THE PIPE AND THEN AT 12" VERTICAL INTERVALS UNTIL FINAL GRADE IS REACHED.
3. ALL TRENCHES SHALL BE BACKFILLED WITH ACCEPTABLE MATERIAL AND COMPACTED TO MINIMUM 95% IN UNPAVED AREAS AND 98% IN PAVED AREAS OF THE MAXIMUM DENSITY BASED ON AASHTO T-180 MODIFIED PROCTOR TEST.
4. TEST RESULTS SHALL BE SUBMITTED TO THE CITY AT A MINIMUM FREQUENCY OF ONE SET OF TESTS BETWEEN EACH MANHOLE AND ONE ADDITIONAL SET OF TESTS AT EVERY MANHOLE. IDENTIFICATION OF TEST LOCATIONS SHALL BE CLEARLY INDICATED ON TEST REPORTS. TEST RESULTS SHALL BE FORWARDED PROMPTLY TO THE CITY'S DESIGNATED SITE INSPECTOR.

CLOSE-OUT:

1. ALL SEWER MAINS, PRIOR TO FINAL ACCEPTANCE BY THE CITY AND PRIOR TO ANY FINAL PAVING OPERATIONS, SHALL BE TELEVISED AND SUBMITTED TO THE CITY USING A "PAN AND TILT CAMERA" WITH DEPTH GAUGE IN FRONT OF THE CAMERA BY A CITY APPROVED CONTRACTOR. THE CAMERA SHALL RUN FROM DOWN STREAM MANHOLE TO UP STREAM MANHOLE. CITY INSPECTOR SHALL BE NOTIFIED IN ADVANCE AND BE PRESENT DURING THE TELEVISING OF THE SEWER SYSTEM. THE VIDEO SHALL BE NON-STOP WITH AUDIO DESCRIBING WHAT IS BEING REVIEWED. WRITTEN VIDEO LOGS DESCRIBING THE CONDITION OF THE LINES SHALL ACCOMPANY THE VIDEO SUBMISSION TO THE CITY 48 HOURS PRIOR TO COMMENCING ANY INSTALLATION OF ASPHALT OR CONCRETE PAVEMENT. THE CITY MAY REQUIRE ADDITIONAL VIDEO TAPING, VIDEO TAPING OF LATERALS, AND/OR INFILTRATION/EXFILTRATION TESTS IF DEFECTS ARE APPARENT OR WORKMANSHIP IS QUESTIONABLE.
2. UPON CONSTRUCTION COMPLETION AND ACCEPTANCE OF THE SYSTEM, IT SHALL BE THE DESIGN ENGINEER'S RESPONSIBILITY TO ENSURE THAT THE SYSTEM IS PROPERLY CERTIFIED AND ACCEPTED BY THE FLORIDA DEPARTMENT OF ENVIRONMENTAL PROTECTION AND AS-BUILTS ARE PROVIDED TO THE CITY PRIOR TO ANY USE OF THE SYSTEM.

STANDARD CONSTRUCTION DETAIL
SANITARY SEWER NOTES
(CONTINUED)

FILE NAME S1.DOC
DETAIL REF: S-1.5
REV. 12/18

ZEV COHEN & ASSOCIATES, INC.
300 INTERCHANGE BLVD., STE. C
DAYTONA BEACH, FL 32114
WWW.ZEVCOHEN.COM

CIVIL ENGINEERING
LANDSCAPE ARCHITECTURE
ENVIRONMENTAL
PLANNING
TRANSPORTATION
(LC 42)
(EB 0543)

NO.	DATE	BY	SUBMITTALS / REVISIONS
1	03-24-23	MT	REVISED PER CITY COMMENTS
2	04-24-23	MT	REVISED PER CITY AND DISTRICT COMMENTS
3	05-01-23	KR/TR	REVISED PER CITY AND COUNTY COMMENTS DATED 04-19-2023

COASTAL OAKS
FINAL ENGINEERING PLANS
CONSTRUCTION NOTES

CITY OF PORT ORANGE
VOLUSIA COUNTY, FLORIDA

PROJECT NO: ZC 22119
DESIGNED BY: BB
DRAFTED BY: MT
CHECKED BY: BB
DRAWING FILE: 22119-NOT

Know what's below. Call before you dig.

ROBERT J. BALL, P.E., NO.60001
NOT VALID WITHOUT SEAL

SHEET: C4 OF 15

ALL MATERIALS AND INSTALLATION METHODS USED FOR LAND DEVELOPMENT CODE REQUIRED IMPROVEMENTS FOR SUBDIVISIONS AND SITE PLANS SHALL BE IN CONFORMANCE WITH THE CITY, FDOT STANDARD SPECIFICATIONS FOR ROAD AND BRIDGE CONSTRUCTION (LATEST EDITION) AND THE FDOT ROADWAY AND TRAFFIC DESIGN STANDARDS (LATEST EDITION).

1. ALL STORM SEWERS AND CULVERTS LOCATED IN ROADWAY RIGHTS-OF-WAY AND ROADWAY EASEMENTS SHALL BE:
   A. CLASS III (MIN.) REINFORCED CONCRETE PIPE (RCP), IN ACCORDANCE WITH ASTM C76, C655, C506 AND C507. ALL RCP JOINTS SHALL BE ENTIRELY WRAPPED WITH FILTER FABRIC WITH A MINIMUM WIDTH OF 24" AND A MINIMUM OF 24" OVERLAP SECURED WITH PLASTIC OR STAINLESS BANDS. GASKETS ALONE ARE NOT PERMITTED AS AN EQUIVALENT SUBSTITUTE FOR MEETING THIS REQUIREMENT. ALL JOINTS SHALL BE RUBBER GASKETED FOR BOTH ROUND AND ELLIPTICAL PIPE.
   B. CORRUGATED, SMOOTH INTERIOR WALL, HIGH DENSITY POLYETHYLENE (HDPE), UP TO 60” DIAMETER, IN ACCORDANCE WITH ASTM F2306. ALL JOINTS WILL BE IN ACCORDANCE WITH MANUFACTURER’S SPECIFICATIONS.
   C. CORRUGATED, SMOOTH INTERIOR WALL, POLYPROPYLENE (PP), UP TO 60" DIAMETER, IN ACCORDANCE WITH ASTM F2881 ALL JOINTS WILL BE IN ACCORDANCE WITH MANUFACTURER’S SPECIFICATIONS.
   D. CORRUGATED, SMOOTH INTERIOR WALL, PVC, UP TO 36” DIAMETER, IN ACCORDANCE WITH ASTM F949 ALL JOINTS WILL BE IN ACCORDANCE WITH MANUFACTURER’S SPECIFICATIONS.
2. STORM SEWERS AND CULVERTS LOCATED OUTSIDE OF ROADWAY RIGHTS-OF-WAY AND ROADWAY EASEMENTS MAY BE MADE OF ALTERNATE MATERIALS, INCLUDING SDR26 TO SDR35 PVC IN ACCORDANCE WITH ASTM D-3034.
3. DEPTH OF COVER MEASURED TO THE TOP OF PIPE (NOT INCLUDING THE BELL JOINT) SHALL BE A MINIMUM OF 12". DEVIATION FROM THIS REQUIREMENT MAY BE ALLOWED BY INCREASING THE PIPE'S STRUCTURAL CAPACITY. THIS DEVIATION MUST BE SPECIFIED ON THE PLANS APPROVED FOR CONSTRUCTION AND SUBSEQUENTLY REFLECTED ON THE SHOP DRAWINGS AND AS-BUILT PLANS.
4. ALL STORM DRAINAGE PIPES LOCATED IN ROADWAY RIGHTS-OF-WAY AND ROADWAY EASEMENTS SHALL BE A MINIMUM OF 15" DIAMETER OR EQUIVALENT AND BE DESIGNED FOR A MINIMUM OF A 25 YEAR - 24 HOUR STORM. STORM DRAINAGE PIPES SMALLER THAN 15" ARE PERMITTED ON PRIVATE SITE PLANS PROVIDED MAINTENANCE IS PERFORMED BY THE OWNER.
5. STORM INLETS, MANHOLES, AND CATCH BASINS SHALL BE EITHER POURED IN PLACE OR PRECAST REINFORCED CONCRETE. STRUCTURES SHALL BE REQUIRED AT EACH CHANGE OF PIPE SIZE OR CHANGE IN PIPE DIRECTION. ALL STRUCTURES SHALL BE IN COMPLIANCE WITH FDOT DRAINAGE INDEX 200. CAST IN PLACE STRUCTURES SHALL HAVE 8" THICK WALLS AND PRECAST STRUCTURES SHALL HAVE 6" THICK WALLS. THESE DIMENSIONS MUST BE REFLECTED ON BOTH SHOP AND AS-BUILT DRAWINGS.
6. CULVERTS SHALL BE SLOPED TO MAINTAIN A MINIMUM SELF-CLEANING VELOCITY OF 3' PER SECOND USING MANNING'S "n" CORRESPONDING TO THE PIPE MATERIAL.
7. FOR SITE PLANS, STORM INLET SPACING SHALL BE DESIGNED TO ACCEPT 100% OF THE RUNOFF FROM A RAINFALL INTENSITY OF 4" PER HOUR WITHOUT RESULTING IN PONDING OF WATER AROUND THE INLET.
8. FOR SUBDIVISION PLANS, STORM INLET SPACING, WITH PIPING 15" IN DIAMETER OR LARGER, SHALL BE DESIGNED WITH THE MAXIMUM DISTANCE OF 300’ BETWEEN INLETS AND/OR CLEAN-OUT JUNCTION BOXES. FOR ROADWAY SECTIONS HAVING CURB AND GUTTER AND DESIGN SPEEDS OF 45 MPH AND LESS, SPREAD RESULTING FROM A RAINFALL INTENSITY OF 4" PER HOUR SHALL NOT EXCEED ONE-HALF OF THE TRAVEL LANE ADJACENT TO THE GUTTER.
9. RETENTION AREA WATER DEPTHS SHALL BE 4' MINIMUM TO 12' MAXIMUM, MEASURED FROM THE NORMAL WATER LEVEL.

CITY OF PORT ORANGE 1867 FLORIDA

STANDARD CONSTRUCTION DETAIL
STORM DRAINAGE DESIGN
AND CONSTRUCTION NOTES

REV. 12/18

FILE NAME: ST1.DOC
DETAIL REF: ST-1

10. THE MAXIMUM PERMISSIBLE SLOPE OF ANY NEW POND BANKS IS 4:1 (HORIZONTAL:VERTICAL). THIS LIMIT SHALL BE APPLIED TO ALL AREAS EXCEPT BELOW THE WATER TABLE WHERE SHARPER SLOPES ARE PERMISSIBLE.
11. PIPED STORMWATER SYSTEMS SHALL HAVE A MINIMUM DRAINAGE MAINTENANCE EASEMENT WIDTH OF 20', CENTERED OVER PIPE/STRUCTURE, AND SHALL BE INCREASED DEPENDING UPON CONDITIONS, SUCH AS OSHA UNSHIELDED TRENCH COMPLIANCE.
12. NORMAL ROADSIDE SWALES ARE PERMITTED TO BE CONSTRUCTED TO A MAXIMUM DEPTH OF 18" BELOW THE OUTSIDE EDGE OF PAVEMENT OR CONCRETE CURB.
13. CONCRETE EROSION CONTROL MUST BE PROVIDED WHERE SWALES OR CULVERTS INTERCEPT DRAINAGE DITCHES.
14. IN GENERAL, ALL RETENTION / DETENTION SITES MUST BE CONSTRUCTED ON ALL PROJECTS PRIOR TO ANY ROAD, PARKING LOT, OR BUILDING CONSTRUCTION COMMENCING OR AS CURRENT PERMIT CONDITIONS DICTATE. SEWER AND WATER MAINS MAY BE INSTALLED PRIOR TO RETENTION/DETENTION SITE ONSTRUCTION IF DEWATERING IS NOT REQUIRED.
15. POND INFLOW AND OUTLET STRUCTURES SHALL GENERALLY BE CONSTRUCTED WITH REINFORCED CONCRETE.
16. SKIMMERS FOR WET PONDS SHALL BE CONSTRUCTED SUCH THAT THE BOTTOM EXTENDS 6" BELOW THE NORMAL WATER LEVEL AND 6" ABOVE THE OVERFLOW. FOR DRY PONDS, THE SKIMMER BOTTOM SHALL BE SET 6" BELOW THE LOWEST OVERFLOW ELEVATION AND 6" ABOVE THE HIGHEST POINT OF OVERFLOW. ALL SKIMMERS SHALL BE CONSTRUCTED OF MINIMUM 1/4" THICK ALUMINUM OR FIBERGLASS AND ADEQUATELY SUPPORTED TO PREVENT DEFLECTION.
17. DEVELOPMENT PLANS FOR ALL STORMWATER MANAGEMENT SYSTEMS SHALL CONTAIN POP-OFF DATA (OVERFLOW), BOTTOM ELEVATION, NORMAL WATER LEVELS, MEAN ANNUAL SEASONAL HIGH WATER TABLE ELEVATION, TREATMENT VOLUME AND CORRESPONDING ELEVATION, 100 YEAR HIGH WATER LEVELS, AND THE DESIGN TAILWATER ELEVATION (IF APPLICABLE).
18. WHEN CULVERTS ARE INSTALLED TO MAINTAIN THE FLOW OF EXISTING DRAINAGE WAYS WHERE NEWLY PROPOSED ROADS WOULD OTHERWISE SEVER THE DRAINAGE WAY THEN CULVERTS CROSSING RIGHTS-OF-WAY SHALL EXTEND FROM RIGHT-OF-WAY LINE TO RIGHT-OF-WAY LINE UNDER THE ROADWAY. CULVERTS SHALL BE DESIGNED TO ACCOMMODATE THE FLOW FROM THE 100 YEAR-24 HOUR STORM EVENT WITHOUT FLOODING ADJACENT PROPERTY OR SURCHARGING THE SAID ROADWAY.
19. THE CITY MAY REQUEST THAT THE DEVELOPER SUBMIT A REPORT BY A QUALIFIED HYDROLOGIST ON THE IMPACT THE POND WILL HAVE ON NEIGHBORING WATER TABLE ELEVATIONS BOTH DURING CONSTRUCTION AND AFTER POND COMPLETION. THE CITY MAY REQUIRE GROUNDWATER MONITORING DURING THE POND EXCAVATION.
20. SOIL EROSION CONTROL MEASURES, SATISFACTORY TO THE ST. JOHNS RIVER WATER MANAGEMENT DISTRICT AND THE CITY, SHALL BE EMPLOYED DURING CONSTRUCTION.
21. A 10' MAINTENANCE EASEMENTS/RIGHTS-OF-WAY SHALL BE PROVIDED AROUND THE ENTIRE PERIMETER OF ALL PONDS AND ASSOCIATED OUTFALLS DISCHARGING INTO AND OUT OF LAKES. APPLICABLE CROSS SECTIONS SHALL BE INCLUDED ON FINAL DEVELOPMENT PLANS.
22. THE CONTRACTOR SHALL BE RESPONSIBLE TO OBTAIN ANY AND ALL DEWATERING PERMITS THAT MAY BE REQUIRED.
23. IT SHALL BE THE RESPONSIBILITY OF THE CONTRACTOR TO REVIEW AND MAINTAIN A COPY OF THE SJRWMD AND NPDES PERMITS AT THE CONSTRUCTION SITE AND ABIDE BY ALL CONDITIONS OF THE PERMIT.
24. LANDSCAPE PLANS SHALL CLEARLY DEPICT THE DESIGN LOCATION OF PLANTINGS RELATIVE TO THE LOCATION OF PUBLIC UTILITIES AND STORMWATER INFRASTRUCTURE IN ORDER TO EVALUATE POTENTIAL CONFLICTS.

CITY OF PORT ORANGE 1867 FLORIDA

STANDARD CONSTRUCTION DETAIL
STORM DRAINAGE DESIGN
AND CONSTRUCTION NOTES
(CONTINUED)

REV. 12/18

FILE NAME: ST1.DOC
DETAIL REF: ST-1.1

25. NEW OR RELOCATED, UNDERGROUND MAINS SHALL BE LAID TO PROVIDE THE FOLLOWING MINIMUM CROSSING/VERTICAL SEPARATIONS (OUTSIDE TO OUTSIDE):

	WATER	STORM GRAVITY	STORM FORCE	RECLAIM	SANITARY GRAVITY	SANITARY FORCE
WATER		OVER STORM GRAVITY 6", PREFERRED 12"	OVER STORM FORCE 12"	OVER RECLAIM 12"	OVER SANITARY GRAVITY 6", PREFERRED 12"	OVER SANITARY FORCE 12"
		UNDER STORM GRAVITY 12"	UNDER STORM FORCE 12"	UNDER RECLAIM 12"	UNDER SANITARY GRAVITY 12"	UNDER SANITARY FORCE 12"
STORM GRAVITY	OVER WATER 12"		OVER STORM FORCE 6"	OVER RECLAIM 6", PREFERRED 12"	OVER SANITARY GRAVITY 6", PREFERRED 12"	OVER SANITARY FORCE 6", PREFERRED 12"
	UNDER WATER 6", PREFERRED 12"		UNDER STORM FORCE 6”	UNDER RECLAIM 12"	UNDER SANITARY GRAVITY 12”	UNDER SANITARY FORCE 12"
STORM FORCE	OVER WATER 12"	OVER STORM GRAVITY 6”		OVER RECLAIM 12"	OVER SANITARY GRAVITY 12"	OVER SANITARY FORCE 12"
	UNDER WATER 12"	UNDER STORM GRAVITY 6"		UNDER RECLAIM 12"	UNDER SANITARY GRAVITY 12"	UNDER SANITARY FORCE 12"
RECLAIM	OVER WATER 12"	OVER STORM GRAVITY 12”	OVER STORM FORCE 12"		OVER SANITARY GRAVITY 12"	OVER SANITARY FORCE 12"
	UNDER WATER 12"	UNDER STORM GRAVITY 6”, PREFERRED 12”	UNDER STORM FORCE 12"		UNDER SANITARY GRAVITY 12"	UNDER SANITARY FORCE 12"
SANITARY GRAVITY	OVER WATER 12"	OVER STROM GRAVITY 12"	OVER STORM FORCE 12"	OVER RECLAIM 12"		OVER SANITARY FORCE 12"
	UNDER WATER 6", PREFERRED 12"	UNDER STORM GRAVITY 6”, PREFERRED 12"	UNDER STORM FORCE 12"	UNDER RECLAIM 12"		UNDER SANITARY FORCE 12"
SANITARY FORCE	OVER WATER 12"	OVER STORM GRAVITY 12"	OVER STORM FORCE 12"	OVER RECLAIM 12"	OVER SANITARY GRAVITY 12"	
	UNDER WATER 12"	UNDER STORM GRAVITY 6”, PREFERRED 12"	UNDER STORM FORCE 12"	UNDER RECLAIM 12"	UNDER SANITARY GRAVITY 12"	

CITY OF PORT ORANGE 1867 FLORIDA

STANDARD CONSTRUCTION DETAIL
STORM DRAINAGE DESIGN
AND CONSTRUCTION NOTES
(CONTINUED)

REV. 12/18

FILE NAME: ST1.DOC
DETAIL REF: ST-1.2

26. NEW OR RELOCATED, UNDERGROUND MAINS SHALL BE LAID TO PROVIDE THE FOLLOWING MINIMUM HORIZONTAL SEPARATIONS (OUTSIDE TO OUTSIDE):

	WATER	STORM GRAVITY	STORM FORCE	RECLAIM	SANITARY GRAVITY	SANITARY FORCE
WATER		3'	3'	3'	6', PREFERRED 10'	6', PREFERRED 10'
STORM GRAVITY	3'		3'	3'	6', PREFERRED 10'	6', PREFERRED 10'
STORM FORCE	3'	3'		3'	6', PREFERRED 10'	6', PREFERRED 10'
RECLAIM	3'	3'	3'		6', PREFERRED 10'	6', PREFERRED 10'
SANITARY GRAVITY	6', PREFERRED 10'	6', PREFERRED 10'	6', PREFERRED 10'	6', PREFERRED 10'		6', PREFERRED 10'
SANITARY FORCE	6', PREFERRED 10'	6', PREFERRED 10'	6', PREFERRED 10'	6', PREFERRED 10'	6', PREFERRED 10'	

CITY OF PORT ORANGE 1867 FLORIDA

STANDARD CONSTRUCTION DETAIL
STORM DRAINAGE DESIGN
AND CONSTRUCTION NOTES
(CONTINUED)

REV. 12/18

FILE NAME: ST1.DOC
DETAIL REF: ST-1.3

THE FOLLOWING MEASURES REPRESENT MINIMUM STANDARDS TO BE ADHERED TO BY THE CONTRACTOR THROUGHOUT THE CONSTRUCTION OF A PROJECT. THE CITY RESERVES THE RIGHT TO REQUIRE ADDITIONAL MEASURES TO BE EMPLOYED WHEN WARRANTED BY CONDITIONS AND/OR THE FAILURE OF THE CONTRACTOR TO EMPLOY APPROPRIATE EROSION CONTROL BEST MANAGEMENT PRACTICES. FAILURE TO COMPLY WITH THESE PROVISIONS SHALL RESULT IN THE ISSUANCE OF A "STOP WORK ORDER".

1. NO DISTURBANCE OF PROPOSED CONSERVATION EASEMENTS, NATURAL BUFFERS, OR WATER BODIES IS PERMITTED. THE CONTRACTOR SHALL LOCATE THESE AREAS ON SITE AND BARRICADE THEM TO AVOID ANY UNAUTHORIZED CLEARING. BARRICADES AND OTHER PROTECTIVE FENCING ARE TO BE LOCATED AT THE DRIP LINE OF EXISTING NATIVE TREES OR AT THE EDGE OF THE NATIVE UNDER-STORY HABITAT, WHICHEVER IS FURTHEST.

2. SPECIMEN AND HISTORIC TREES, CONSERVATION EASEMENTS, NATURAL VEGETATION BUFFERS, AND SIMILAR AREAS MUST BE PROTECTED BY BARRICADES OR FENCING PRIOR TO CLEARING. BARRICADES ARE TO BE SET AT THE DRIP LINE OF THE TREES, AS SPECIFIED, AND MAINTAINED THROUGHOUT THE DURATION OF THE PROJECT. BARBED WIRE IS NOT PERMITTED AS A PROTECTIVE BARRIER.

3. WHERE A CHANGE OF GRADE OCCURS WITHIN THE DRIP LINE OF A SPECIMEN TREE, SILT FENCES WILL BE REQUIRED DURING CONSTRUCTION AND RETAINING WALLS MUST BE INSTALLED PRIOR TO FINAL ACCEPTANCE BY THE CITY.

4. IT SHALL BE THE RESPONSIBILITY OF THE CONTRACTOR TO HAVE ALL PROTECTIVE VEGETATION BARRICADES AND EROSION CONTROL DEVICES AND MEASURES IN PLACE PRIOR TO THE COMMENCEMENT OF ANY EARTHWORK, INCLUDING PRELIMINARY GRUBBING. BEST MANAGEMENT PRACTICES (BMP'S) ARE TO BE IMPLEMENTED, SUCH AS TEMPORARY CONSTRUCTION FENCES, SILT FENCES AND FLOATING TURBIDITY BARRIERS. IT SHALL BE THE RESPONSIBILITY OF THE CONTRACTOR TO MAINTAIN ALL EROSION CONTROL DEVICES AND MEASURES THROUGHOUT THE DURATION OF THE ENTIRE PROJECT. MAINTENANCE SHALL INCLUDE, BUT NOT LIMITED TO, PERIODIC INSPECTION AND REMOVAL OF DEBRIS ABUTTING EROSION CONTROL DEVICES AS SPECIFICALLY IDENTIFIED IN LDC, CH 10, ARTICLE I, SEC. 5.

5. PRIOR TO THE INSTALLATION OF ANY FILL MATERIALS ON SUBJECT SITE, SILT FENCES SHALL BE INSTALLED (1) ALONG SUBJECT SITE BOUNDARY AND/OR PROPERTY LINES, (2) AT THE EDGE OF CONSERVATION EASEMENTS AND WETLANDS, (3) ADJACENT TO NATURAL LANDSCAPE BUFFERS, (4) AROUND THE PERIMETER OF EXISTING STORM WATER TREATMENT FACILITIES, AND (5) AT ANY ADDITIONAL AREAS THAT THE CITY DEEMS NECESSARY TO BE PROTECTED FROM POTENTIAL EROSION IMPACTS DURING CONSTRUCTION. THESE CONDITIONS SHALL APPLY IN ALL INSTANCES WHERE FILL MATERIAL IS BEING INSTALLED WITHIN 25 FEET OF ANY OF THE AFOREMENTIONED LOCATIONS. WHILE THESE ITEMS REPRESENT THE MINIMUM REQUIREMENTS, THE CITY RESERVES THE RIGHT TO IMPOSE ADDITIONAL PROTECTIVE MEASURES, AS DETERMINED DURING ACTUAL SITE VISITS CONDUCTED AS PART OF THE STANDARD REVIEW OF THE SITE-SPECIFIC ABC CLEARING PERMIT APPLICATION AND THROUGHOUT PROJECT CONSTRUCTION.

6. WHERE FILL MATERIAL IS INTENDED TO BE INSTALLED ADJACENT TO EXISTING VEGETATION WHICH IS INTENDED TO REMAIN NATURAL, THE CONTRACTOR MAY INSTALL SILT FENCING AS A TREE PROTECTION MEASURE, IN LIEU OF INSTALLING WOOD BRACING WITH ORANGE MESH. THIS PRACTICE IS ENCOURAGED BY THE CITY. IF THE SILT FENCE FAILS TO PROVIDE ADEQUATE PROTECTION FROM IMPACT DUE TO CONSTRUCTION, THEN BARRICADES OR WOOD BRACING SHALL BE REQUIRED.

7. AT A MINIMUM, THE CONTRACTOR SHALL SEED AND MULCH ALL DISTURBED AREAS. SUFFICIENT GRASS COVERAGE IS TO BE ESTABLISHED WITHIN TWO WEEKS.

8. IT SHALL BE THE RESPONSIBILITY OF THE CONTRACTOR THROUGH SCHEDULING, TO MINIMIZE THE DISTURBANCE OF SITE AREAS THAT HAVE BEEN BROUGHT TO THEIR PROPOSED FINAL GRADE. WITHIN SEVEN (7) DAYS OF BRINGING A SUBJECT AREA TO ITS FINAL GRADE OR INACTIVITY IN CONSTRUCTION, THE CONTRACTOR SHALL INSTALL SEED AND MULCH OR SOD, AS REQUIRED.

CITY OF PORT ORANGE 1867 FLORIDA

STANDARD CONSTRUCTION DETAIL
CONTRACTOR REQUIREMENTS FOR
SITE CLEARING, GRADING, AND EROSION CONTROL
DESIGN AND CONSTRUCTION

REV. 12/18

FILE NAME: M3.DWG
DETAIL REF: M-3

9. FOR INDIVIDUAL CONSTRUCTION PROJECTS INVOLVING MULTIPLE PHASES, (PHASING IS REQUIRED FOR SITES 30 ACRES AND LARGER) UPON COMPLETION OF EACH PHASE OF THE PROJECT, SEEDING AND MULCHING AND / OR SODDING IS TO BE PERFORMED PRIOR TO COMMENCING THE NEXT PHASE OF CONSTRUCTION.

10. ONCE AN AREA IS SEEDED OR SODDED, IT MUST BE MAINTAINED BY THE CONTRACTOR TO ALLOW THE GRASS TO BECOME ESTABLISHED. IF THE GRASS IS NOT ESTABLISHED WITHIN TWO WEEKS THE CITY MAY REQUIRE THE CONTRACTOR TO RE-SEED OR A NON-VEGETATIVE OPTION MAY BE EMPLOYED.

11. ANY BURNING OF CLEARED MATERIALS MUST BE INSPECTED AND PERMITTED ON A DAILY BASIS. CONTACT THE FIRE MARSHAL AT 506-5905 PRIOR TO EACH DAY OF DESIRED BURNING.

12. ABSOLUTELY NO BURYING OF CLEARED MATERIALS IS PERMITTED.

13. THE REMOVAL OF ALL VEGETATION AND TOPSOIL ON THE FUTURE ROADWAY, PARKING AND BUILDING LOT AREAS IS REQUIRED TO BE COMPLETED PRIOR TO THE PLACEMENT OF FILL ON THOSE AREAS. THE TOPSOIL MAY BE TEMPORARILY STOCKPILED AND USED AS TOPSOIL OVER PROPOSED GREEN AREAS SUCH AS PLANT BEDS, SODDED AREAS, AND WHERE TREES ARE TO BE INSTALLED OR RELOCATED.

14. A SIGNED, DATED, AND SEALED LETTER FROM A SOILS ENGINEER OR THE ENGINEER OF RECORD CERTIFYING THAT THE AREAS TO BE FILLED HAVE BEEN STRIPPED OF ORGANIC MATERIALS, MUST BE SUBMITTED TO THE CITY PRIOR TO FILLING.

15. FILL MATERIAL IS TO BE PLACED IN ONE FOOT MAXIMUM LIFTS AND COMPACTED TO THE APPROPRIATE DENSITY (98% FOR PAVED AREAS AND 95% FOR BUILDING PADS AND ALL OTHER AREAS AS PER AASHTO T-180).

16. DURING SUBDIVISION DEVELOPMENT WHEN FUTURE BUILDING LOTS ARE FILLED AS PART OF THE OVERALL SUBDIVISION IMPROVEMENTS, COMPACTION TEST REPORTS MUST BE PERFORMED ON THE BUILDING LOTS AT 300 FOOT INTERVALS. THESE TESTS ARE TO BE PERFORMED IN ONE-FOOT VERTICAL INCREMENTS. THE RESULTS OF THESE TESTS ARE TO BE SUBMITTED TO THE CITY UPON COMPLETION OF THE TESTS.

17. IF ANY MUCK MATERIAL IS DISCOVERED, IT SHALL BE REQUIRED TO BE REMOVED AND REPLACED WITH A SUITABLE MATERIAL THAT IS PROPERLY BACKFILLED, COMPACTED AND TESTED USING AASHTO T-180 MODIFIED PROCTOR METHOD.

18. STOCKPILING IS NOT GENERALLY PERMITTED BY THE CITY. WHEN ALLOWED, STOCKPILES SHALL NOT EXCEED SIX FEET IN HEIGHT MEASURED FROM THE ORIGINAL GRADE. AT A MINIMUM, STOCK PILES THAT WILL REMAIN IN PLACE IN EXCESS OF TWENTY DAYS SHOULD BE SEEDED AND MULCHED IMMEDIATELY UPON PLACEMENT OF THE FINAL LIFT.

19. SOILS ARE TO BE STABILIZED BY WATER OR OTHER MEANS DURING CONSTRUCTION. THIS IS INTENDED TO REDUCE SOIL EROSION AND THE IMPACT TO NEIGHBORING COMMUNITIES. ADEQUATE WATERING METHODS SHOULD BE EMPLOYED TO ALLOW DAILY COVERAGE OF THE ENTIRE LIMITS OF ALL AREAS THAT DO NOT HAVE AN ESTABLISHED VEGETATIVE COVER. METHODS TO BE EMPLOYED INCLUDE, BUT ARE NOT LIMITED TO, WATER TRUCKS, PERMANENT IRRIGATION SYSTEMS, TEMPORARY SPRINKLER SYSTEMS OPERATED BY PUMPING UNITS CONNECTED TO WET RETENTION PONDS, WATER CANNONS, TEMPORARY IRRIGATION SYSTEMS MOUNTED ATOP STOCKPILE AREAS, AND OTHER METHODS AS DEEMED NECESSARY BY THE CITY.

20. ALL FILL MATERIALS LOCATED BENEATH STRUCTURES AND PAVEMENT SHALL CONSIST OF CLEAN GRANULAR SAND FREE FROM ORGANICS AND SIMILAR MATERIAL THAT COULD DECOMPOSE.

21. ALL FILL TO BE PLACED IN LANDSCAPED AREAS SHALL HAVE A Ph RANGE BETWEEN 5.5 AND 7.5, BE ORGANIC IN NATURE, FREE OF ROCKS AND DEBRIS, OR MATCH NATIVE EXISTING SOILS.

CITY OF PORT ORANGE 1867 FLORIDA

STANDARD CONSTRUCTION DETAIL
CONTRACTOR REQUIREMENTS FOR
SITE CLEARING, GRADING, AND EROSION CONTROL
DESIGN AND CONSTRUCTION
(CONTINUED)

REV. 12/18

FILE NAME: M3.DWG
DETAIL REF: M-3.1

ZEV COHEN & ASSOCIATES, INC.
300 INTERCHANGE BLVD., STE. C
ORMOND BEACH, FL 32174
WWW.ZEVCOHEN.COM

CIVIL ENGINEERING
LANDSCAPE ARCHITECTURE
ENVIRONMENTAL
PLANNING
TRANSPORTATION
(LC 62) (EB 4516)

NO.	DATE	BY	SUBMITTALS / REVISIONS
1	03-24-23	MT	REVISED PER CITY COMMENTS
2	04-24-23	MT	REVISED PER CITY AND DISTRICT COMMENTS
3	05-26-23	SA	REVISED PER CITY COMMENTS

COASTAL OAKS
FINAL ENGINEERING PLANS
CONSTRUCTION NOTES

CITY OF PORT ORANGE
VOLUSIA COUNTY, FLORIDA

PROJECT NO: ZC 22119
DESIGNED BY: BB
DRAFTED BY: MT
CHECKED BY: BB
DRAWING FILE: 22119-NOT

811
Know what's below.
Call before you dig.

ROBERT J. BALL LICENSE No PE60001 STATE OF FLORIDA PROFESSIONAL ENGINEER

Digitally signed by Robert J Ball
DN: CN=Robert J Ball, dnQualifier=A01410D00000184CE569AA8000AC4E9, O=ZEV COHEN AND ASSOCIATES INC., C=US
Date: 2023.05.31 09:21:18-04'00'

ROBERT J. BALL, P.E., NO.60001
NOT VALID WITHOUT SEAL

SHEET: C5 OF 15

R:\22119 MCGRAY HERBERT STREET PROPERTY – P.O\FINAL ENGINEERING PLANS\CADDWGS\22119-ODP.DWG – PRINTED 5/31/2023 9:03 AM

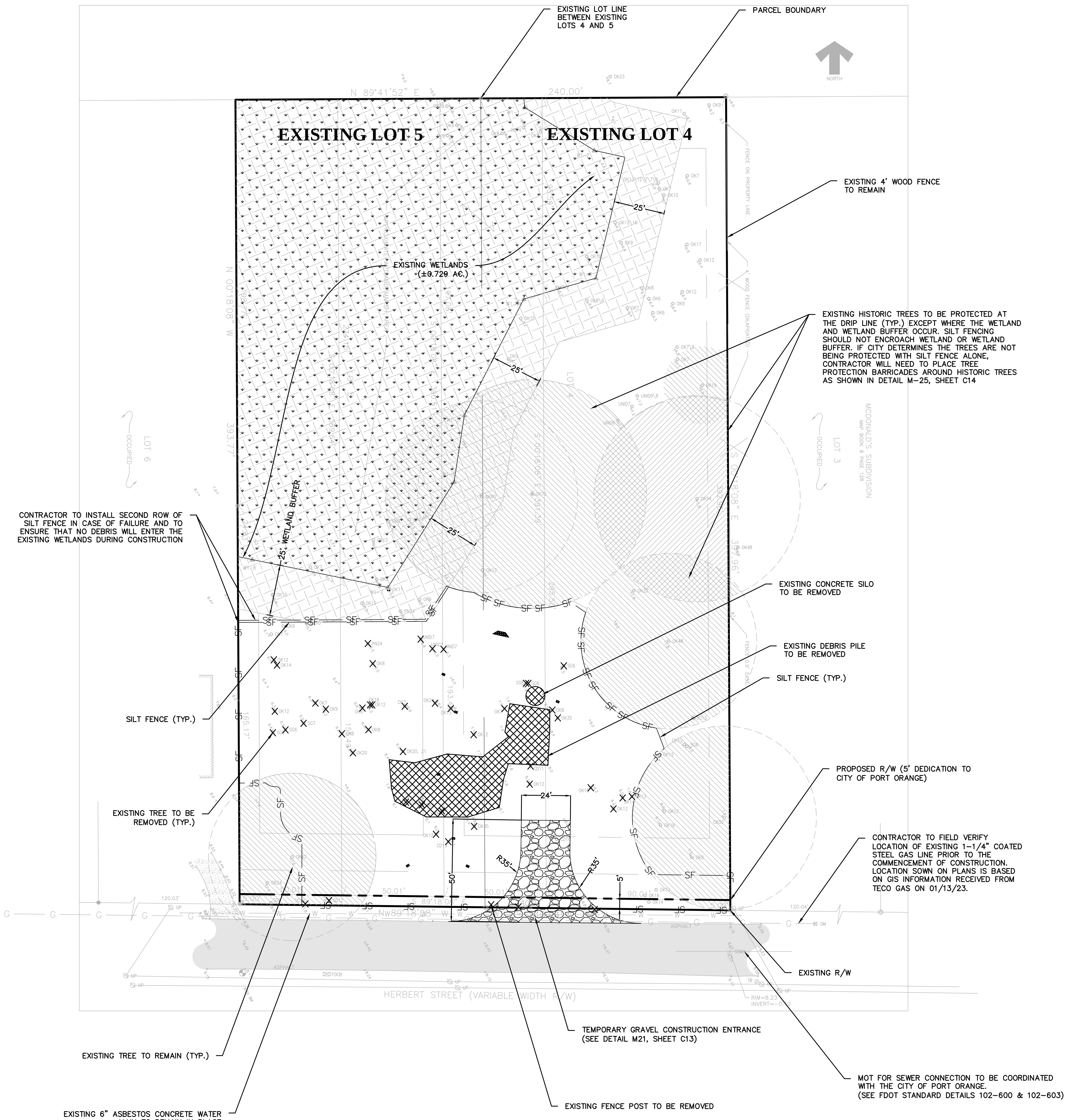

SCALE : 1" = 30'

LEGEND:

- EXISTING WETLANDS
- WETLAND CONSERVATION EASEMENT TO BE DEDICATED TO THE CITY OF PORT ORANGE
- TREE CONSERVATION EASEMENT
- WETLAND BUFFER
- DEMOLITION/ CLEARING AREA
- SF — SILT FENCE
- × — EXISTING TREE TO BE REMOVED

NOTES:
1. CONTRACTOR TO PROVIDE TREE PROTECTION BARRICADES AROUND THE SPECIMEN/ HISTORIC TREES CLOSEST TO THE LIMITS OF CONSTRUCTION. CONTRACTOR TO REFER TO CITY STANDARD DETAIL M-25, SHEET C14.
2. SEE TREE PROTECTION PLAN, SHEET TP1, FOR ADDITIONAL CLEARING INFORMATION

ZEV COHEN & ASSOCIATES, INC.
300 INTERCHANGE BLVD., STE. C
ORMOND BEACH, FL 32174
WWW.ZEVCOHEN.COM

CIVIL ENGINEERING
LANDSCAPE ARCHITECTURE
ENVIRONMENTAL
PLANNING
TRANSPORTATION
(LC 62) (EB 4516)

NO.	DATE	BY	SUBMITTALS / REVISIONS
1	03-24-23	MT	REVISED PER CITY COMMENTS
2	04-24-23	MT	REVISED PER CITY AND DISTRICT COMMENTS
3	05-26-23	SA	REVISED PER CITY COMMENTS

COASTAL OAKS
FINAL ENGINEERING PLANS
CLEARING PLAN

CITY OF PORT ORANGE
VOLUSIA COUNTY, FLORIDA

PROJECT NO: ZC 22119
DESIGNED BY: BB
DRAFTED BY: MT
CHECKED BY: BB
DRAWING FILE: 22119-ODP
XREF'S: 22119-BASE.DWG
XREF'S: 22119-SURV.DWG

ROBERT J. BALL LICENSE No PE60001 STATE OF FLORIDA PROFESSIONAL ENGINEER

Digitally signed by Robert J Ball
DN: CN=Robert J Ball, dnQualifier=A01410D00000184CE569AA8000AC4E9, O=ZEV COHEN AND ASSOCIATES INC., C=US
Date: 2023.05.31 09:21:20-04'00'

ROBERT J. BALL, P.E., NO.60001
NOT VALID WITHOUT SEAL

SHEET: C6 OF 15

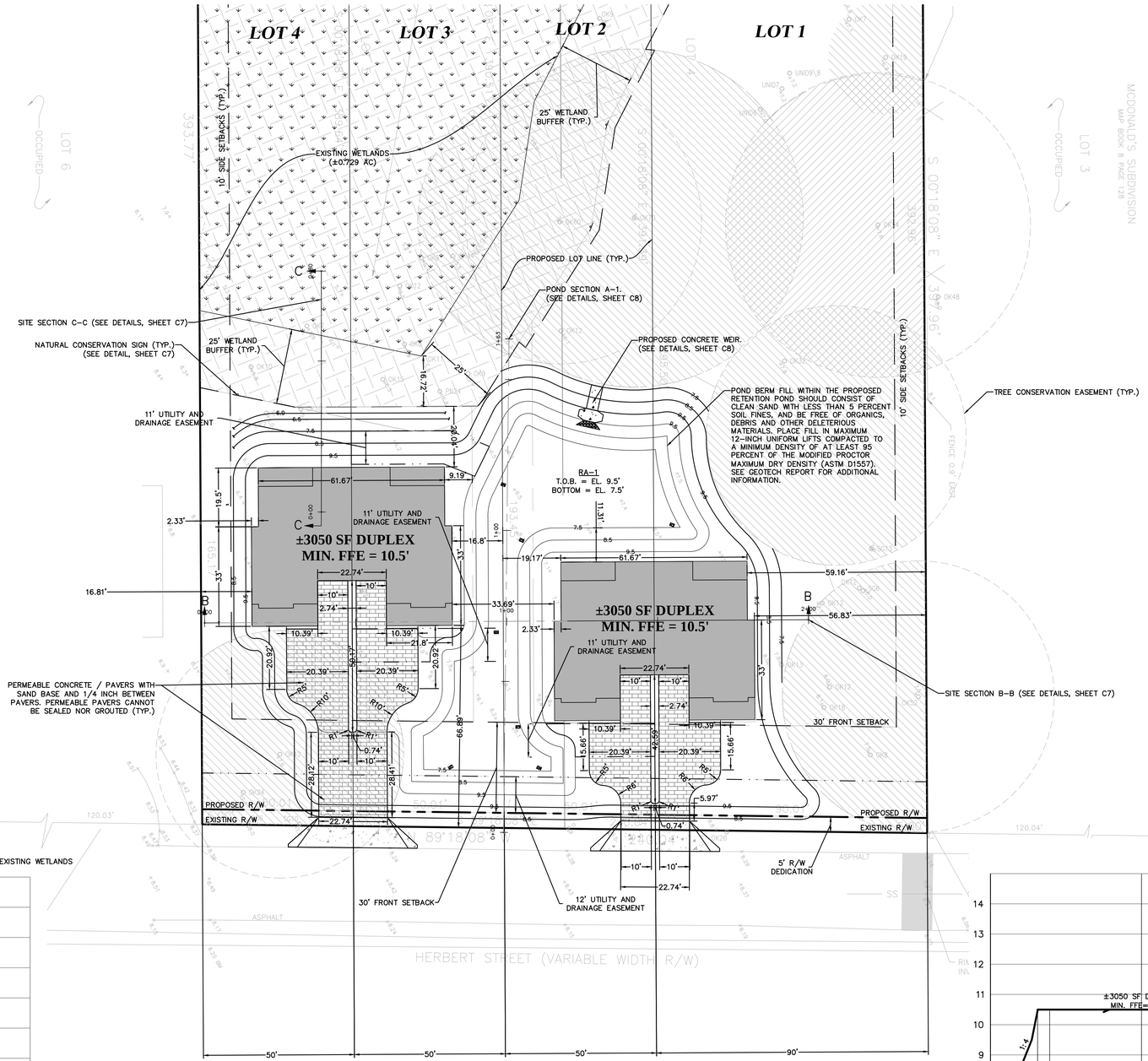

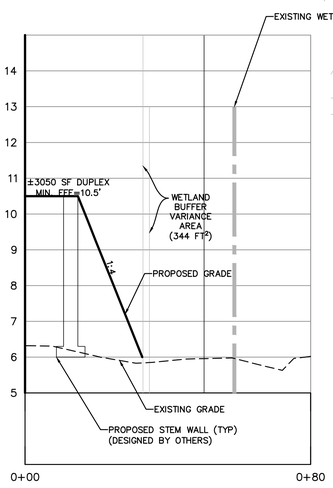

SITE SECTION C-C

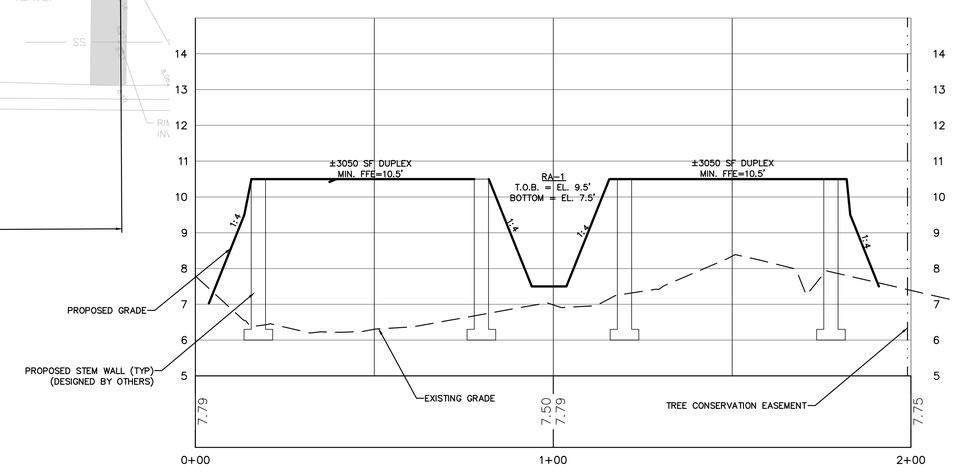

SITE SECTION B-B

0 10 20 30 40

SCALE : 1" = 20'

LEGEND:

- TREE CONSERVATION EASEMENT
- WETLAND CONSERVATION EASEMENT
- WETLAND BUFFER
- EXISTING WETLANDS
- PERMEABLE CONCRETE/ PAVERS
- CONCRETE

NOTES:
1. NATURAL CONSERVATION AREA SIGNS ARE TO BE PLACED AT EVERY TURN OF THE CONSERVATION BUFFER.PLEASE REFER TO THE SIGN DETAIL ON THIS SHEET C7.
2. IF ANY AREA WITHIN THE WETLAND BUFFER IS DISTURBED, REPLANTING OF THE AREA WITH NATIVE VEGETATION WILL BE REQUIRED.

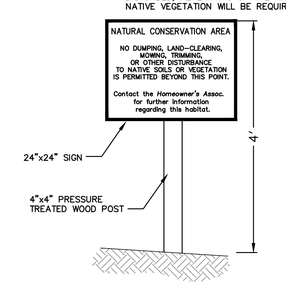

NOTE: SIGN CONSTRUCTION AND DESIGN SHALL COMPLY WITH STATE AND LOCAL STATUTES. SIGNS TO BE PLACED AT EACH BUILDING CORNER AND AT EVERY TURN OF THE CONSERVATION EASEMENT.

NATURAL CONSERVATION AREA SIGN DETAIL

NTS

ZEV COHEN & ASSOCIATES, INC.
300 INTERCHANGE BLVD., STE. C
DAYTONA BEACH, FL 32114
WWW.ZEVCOHEN.COM

CIVIL ENGINEERING
LANDSCAPE ARCHITECTURE
ENVIRONMENTAL
PLANNING
TRANSPORTATION

(LC 42)
(EB 6516)

NO.	DATE	BY	SUBMITTALS / REVISIONS
1	03-24-23	MT	REVISED PER CITY COMMENTS
2	04-24-23	MT	REVISED PER CITY AND DISTRICT COMMENTS
3	05-26-23	SA	REVISED PER CITY COMMENTS

COASTAL OAKS
FINAL ENGINEERING PLANS
SITE LAYOUT PLAN

VOLUSIA COUNTY, FLORIDA

CITY OF FORT ORANGE

PROJECT NO: ZC 22119

DESIGNED BY: BB

DRAFTED BY: MT

CHECKED BY: BB

DRAWING FILE: 22119-GSS
XREF'S: 22119-BASE.DWG
XREF'S: 22119-SURV.DWG

ROBERT J. BALL LICENSE No PE60001 STATE OF FLORIDA PROFESSIONAL ENGINEER

Digitally signed by Robert J Ball
DN: C=United States, O=Zev Cohen & Associates Inc, OU=Robert J Ball, CN=Robert J Ball, E=robertb@zevcohen.com
Reason: I am the author of this document
Location:
Date: 2023.05.26 09:21:26-04'00'

ROBERT J. BALL, P.E., NO.60001
NOT VALID WITHOUT SEAL

SHEET: C7 OF 15

I:\22119 MCCRAY HERBERT STREET PROPERTY - P.D\FINAL ENGINEERING PLANS\CAD\MCS\22119-GSS.DWG - PRINTED 5/31/2023 8:03 AM

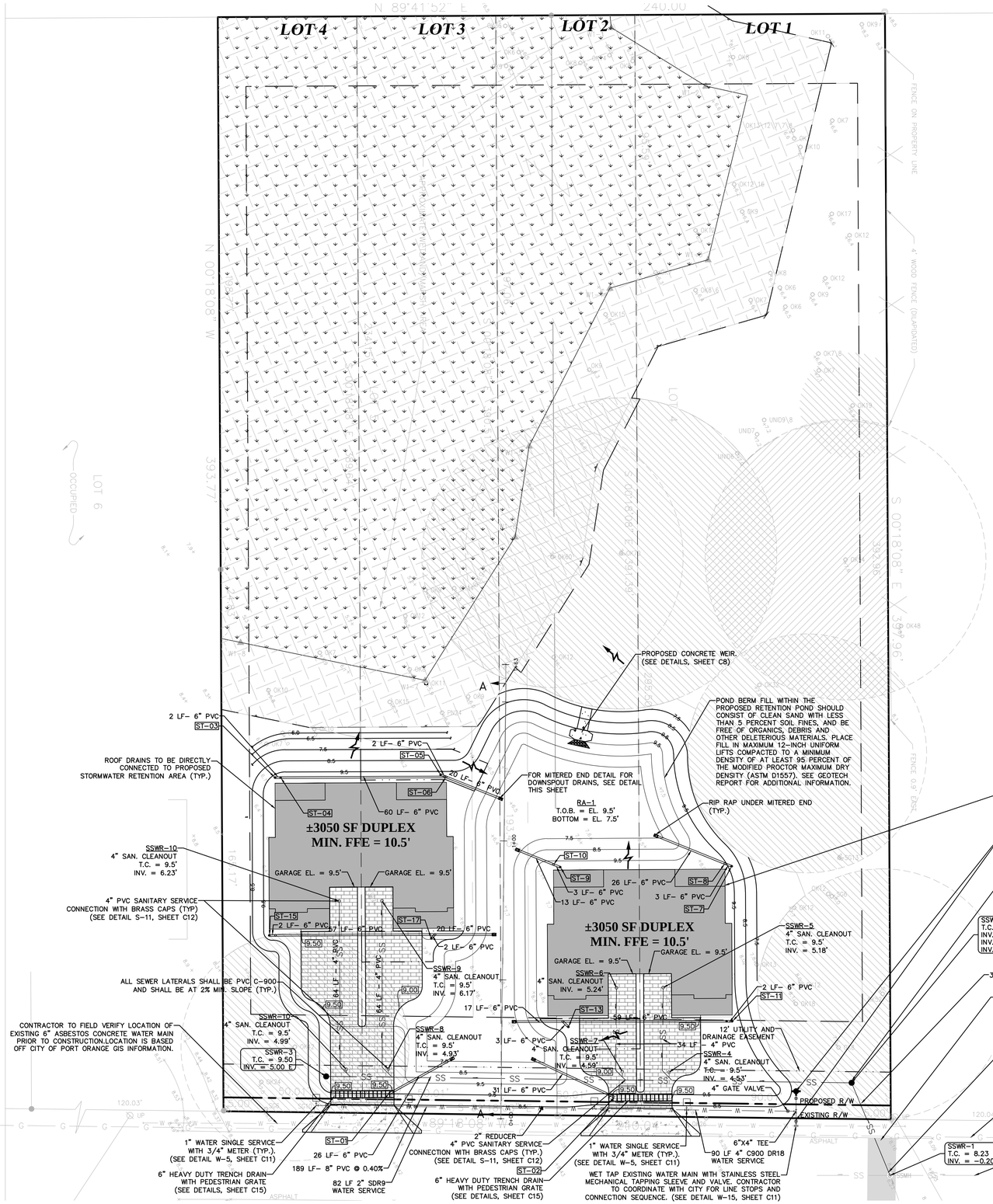

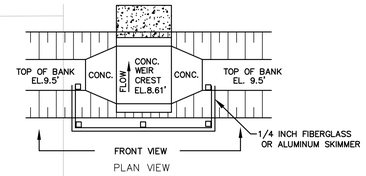

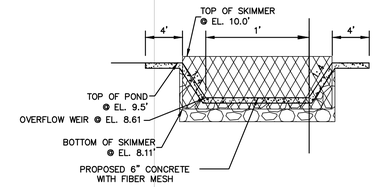

CONCRETE OVERFLOW WEIR DETAIL

SCALE: NTS

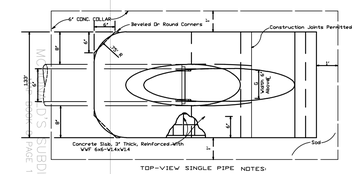

MITERED ENDS AT RETENTION POND FOR DOWNSPOUT DRAINS

SCALE: NTS

0 10 20 30 40

SCALE : 1" = 20'

LEGEND:

- TREE CONSERVATION EASEMENT
- WETLAND CONSERVATION EASEMENT
- WETLAND BUFFER
- EXISTING WETLANDS
- PERMEABLE CONCRETE/ PAVERS
- CONCRETE
- RIP RAP
- PROPOSED SANITARY MAIN AND MANHOLE
- SS — PROPOSED SANITARY SERVICE
- W — PROPOSED WATERMAIN
- F — PROPOSED FIRE MAIN
- R — PROPOSED RECLAIMED WATERMAIN
- PROPOSED GATE VALVE

NOTES:

1. CONTRACTOR TO PROVIDE 10 LF CONCRETE ENCASEMENT OF GRAVITY SEWER WHERE MINIMUM DEP CLEARANCE CANNOT BE ACHIEVED AND/OR MAINTAINED.
2. ALL GRAVITY SEWER PIPE LESS THAN 4 FT OR GREATER THAN 10 FT IN DEPTH TO BE C-900 GREEN PVC WITH COMPATIBLE SERVICE FITTINGS.
3. OWNER/DEVELOPER IS RESPONSIBLE FOR ALL COSTS ASSOCIATED WITH CONNECTING TO THE EXISTING CITY OF PORT ORANGE UTILITIES INCLUDING, BUT NO LIMITED TO, ANY REQUIRED LINE STOPS.
4. ALL SEWER LATERALS SHALL BE PVC C-900 AND SHALL BE AT 2% MIN. SLOPE.
5. ALL SANITARY CLEANOUTS SHALL BE A MIN. OF 3.5 FT AND A MAX DEPTH OF 4 FT IS ALLOWED BELOW FINISH PER STD. DETAIL S-11.
6. REFER TO GEOTECHNICAL REPORT FOR ADDITIONAL SITE REQUIREMENTS.

STORMWATER STRUCTURE TABLE

STRUCTURE NUMBER	STRUCTURE TYPE	STRUCTURE T.C.	PIPE INVERT(S), DIRECTION(S), SIZE(S)
ST-01	6" HEAVY DUTY TRENCH DRAIN W/ PEDESTRIAN GRATE	9.50	7.76 (NE) 6" PVC
ST-02	6" HEAVY DUTY TRENCH DRAIN W/ PEDESTRIAN GRATE	9.50	7.75 (NW) 6" PVC
ST-03	6" CLEAN-OUT	9.50	8.00 (E) 6" PVC
ST-04	Null Structure	8.56	7.97 (W) 6" PVC 7.98 (E) 6" PVC
ST-05	6" CLEAN-OUT	9.50	7.63 (E) 6" PVC
ST-06	Null Structure	8.50	7.62 (W) 6" PVC 7.62 (E) 6" PVC 7.62 (W) 6" PVC
ST-7	6" CLEAN-OUT	9.50	8.00 (W) 6" PVC
ST-8	Null Structure	9.63	7.96 (E) 6" PVC 7.96 (W) 6" PVC
ST-9	6" CLEAN-OUT	9.50	8.00 (W) 6" PVC
ST-10	Null Structure	9.63	7.93 (E) 6" PVC 7.93 (W) 6" PVC
ST-11	6" CLEAN-OUT	9.50	8.00 (W) 6" PVC
ST-12	Null Structure	8.57	7.99 (E) 6" PVC 7.99 (W) 6" PVC
ST-13	6" CLEAN-OUT	9.50	7.62 (NW) 6" PVC
ST-14	Null Structure	8.90	7.60 (E) 6" PVC 7.60 (W) 6" PVC 7.60 (SE) 6" PVC
ST-15	6" CLEAN-OUT	9.50	8.00 (E) 6" PVC
ST-16	Null Structure	9.69	7.99 (W) 6" PVC 7.99 (E) 6" PVC
ST-17	6" CLEAN-OUT	9.50	7.64 (NE) 6" PVC
ST-18	Null Structure	8.96	7.63 (W) 6" PVC 7.63 (E) 6" PVC 7.63 (SW) 6" PVC

ZEV COHEN & ASSOCIATES, INC.
300 INTERCHANGE BLVD., STE. C
DAYTONA BEACH, FL 32114
WWW.ZEVCOHEN.COM
(E8-6548)
CIVIL ENGINEERING
LANDSCAPE ARCHITECTURE
ENVIRONMENTAL
PLANNING
TRANSPORTATION
(LC-42)

NO.	DATE	BY	SUBMITTALS / REVISIONS
1	03-24-23	MT	REVISED PER CITY COMMENTS
2	04-24-23	MT	REVISED PER CITY AND DISTRICT COMMENTS
3	05-26-23	SA	REVISED PER CITY COMMENTS

COASTAL OAKS
FINAL ENGINEERING PLANS
DRAINAGE & UTILITY PLAN

VOLUSIA COUNTY, FLORIDA

CITY OF PORT ORANGE

PROJECT NO: ZC 22119

DESIGNED BY: BB

DRAFTED BY: MT

CHECKED BY: BB

DRAWING FILE: 22119-UTL
XREFS: 22119-BASE.DWG
XREFS: 22119-SURV.DWG

ROBERT J. BALL LICENSE No PE60001 STATE OF FLORIDA PROFESSIONAL ENGINEER

Digitally signed by Robert J Ball
DN: C=Unknown, L=Ball, S=Unknown, O=ZEVCOHENACESSBAA0000AC403, OU=ZEVCOHEN AND ASSOCIATES INC., CN=Date: 2021.05.31 09:21:28-04'00'

ROBERT J. BALL, P.E., NO.60001
NOT VALID WITHOUT SEAL

SHEET: C8 OF 15

G:\22119 MCCRAY HERBERT STREET PROPERTY - PJ\FINAL ENGINEERING PLANS\CAD\DWGS\22119-UTL.DWG - PRINTED: 5/31/2023 9:03 AM

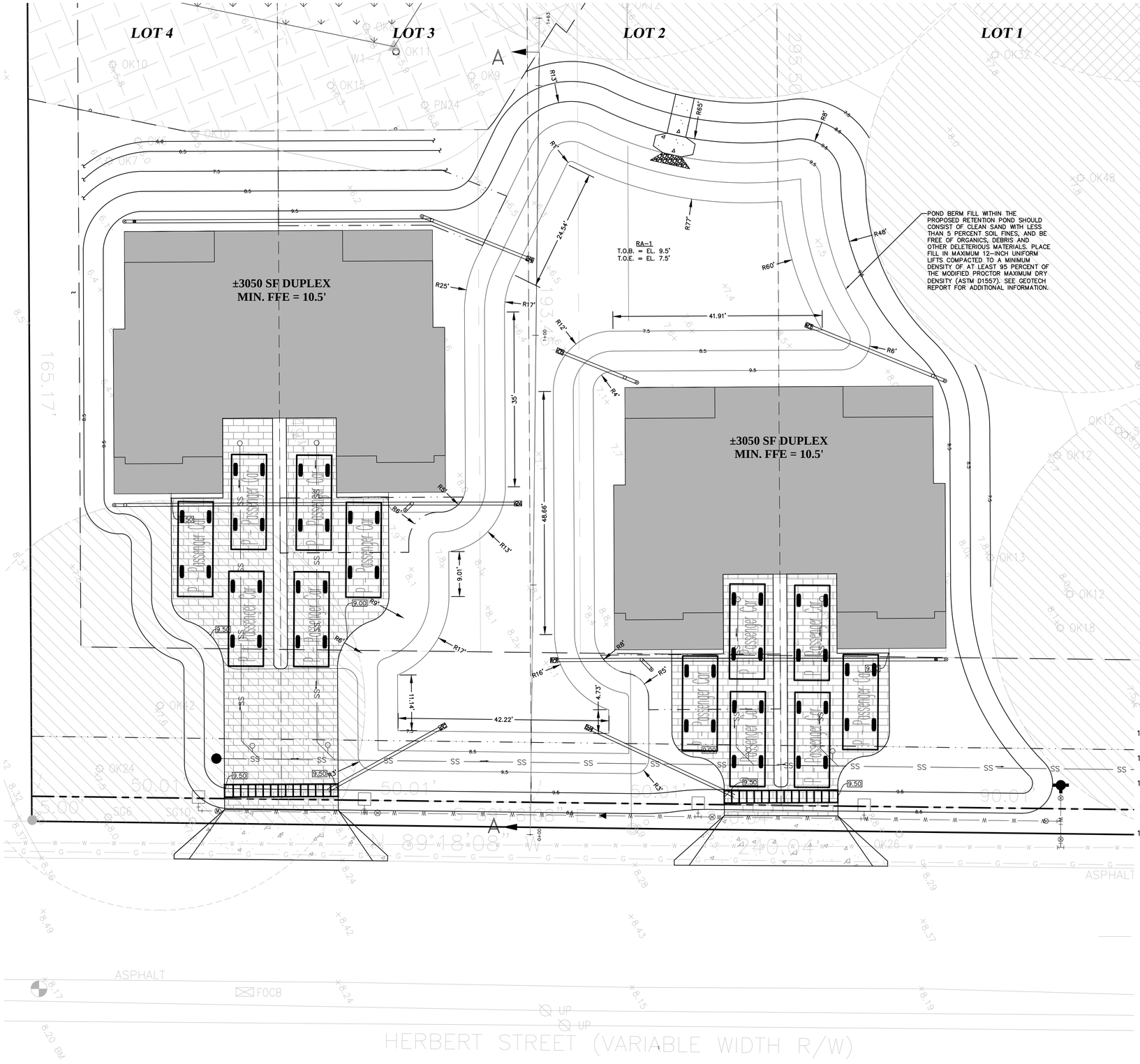

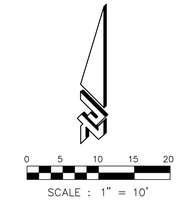

LEGEND:

- TREE CONSERVATION EASEMENT
- WETLAND CONSERVATION EASEMENT
- WETLAND BUFFER
- EXISTING WETLANDS
- PERMEABLE CONCRETE/ PAVERS
- CONCRETE
- PROPOSED SANITARY MAIN AND MANHOLE
- SS — PROPOSED SANITARY SERVICE
- W — PROPOSED WATERMAIN
- F — PROPOSED FIRE MAIN
- R — PROPOSED RECLAIMED WATERMAIN
- PROPOSED GATE VALVE

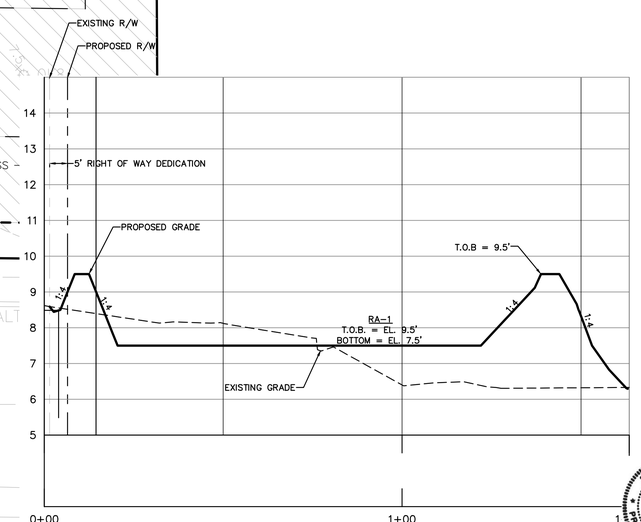

POND SECTION A-A

ZEV COHEN & ASSOCIATES, INC.
300 INTERCHANGE BLVD., STE. C
DAYTONA BEACH, FL 32114
WWW.ZEVCOHEN.COM

CIVIL ENGINEERING
LANDSCAPE ARCHITECTURE
ENVIRONMENTAL
PLANNING
TRANSPORTATION
(EB 6545)

NO.	DATE	BY	SUBMITTALS / REVISIONS
1	03-24-23	MT	REVISED PER CITY COMMENTS
2	04-24-23	MT	REVISED PER CITY AND DISTRICT COMMENTS
3	05-26-23	SA	REVISED PER CITY COMMENTS

COASTAL OAKS
FINAL ENGINEERING PLANS
POND DETAIL SHEET

CITY OF PORT ORANGE — VOLUSIA COUNTY, FLORIDA

PROJECT NO: ZC 22119
DESIGNED BY: BB
DRAFTED BY: MT
CHECKED BY: BB
DRAWING FILE: 22119-UTL
XREF'S: 22119-BASE.DWG
XREF'S: 22119-SURV.DWG

ROBERT J. BALL LICENSE No PE60001 STATE OF FLORIDA PROFESSIONAL ENGINEER

Digitally signed by Robert J Ball
DN: CN=Robert J Ball, C=US, O=ZEV COHEN & ASSOCIATES INC, OU=ZEV COHEN AND ASSOCIATES INC., E=ZC Date: 2021-05.31 09:21:06-04'00'

ROBERT J. BALL, P.E., NO.60001
NOT VALID WITHOUT SEAL

SHEET: C9 OF 15

R:\22119 MCCRAY HERBERT STREET PROPERTY - PJ\FINAL ENGINEERING PLANS\CADD\ECS\22119-UTL.DWG - PRINTED 5/31/2023 9:03 AM

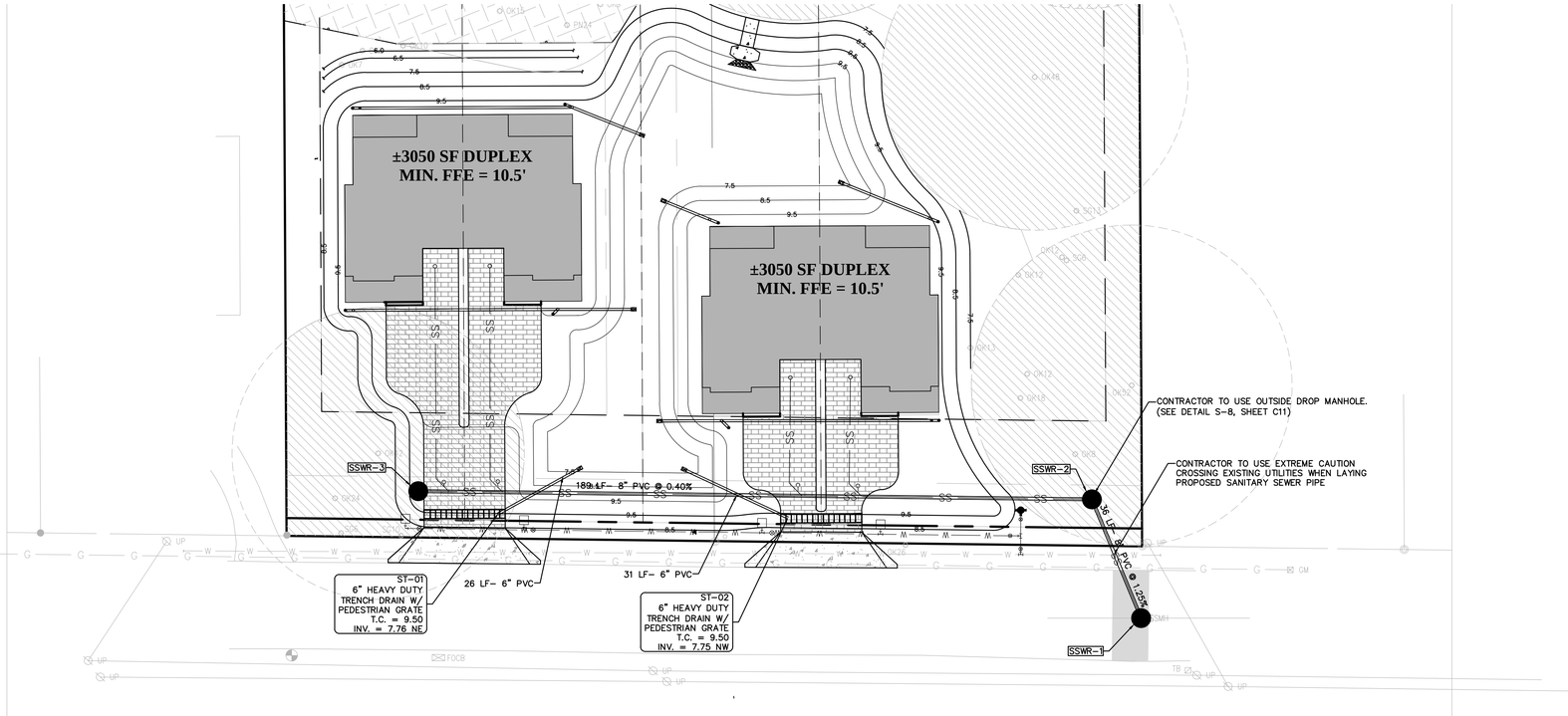

SANITARY SEWER PLAN & PROFILE

PLAN VIEW: 1"=20'
PROFILE VIEW: HORIZ:1"=20'
VERT:1"=2'

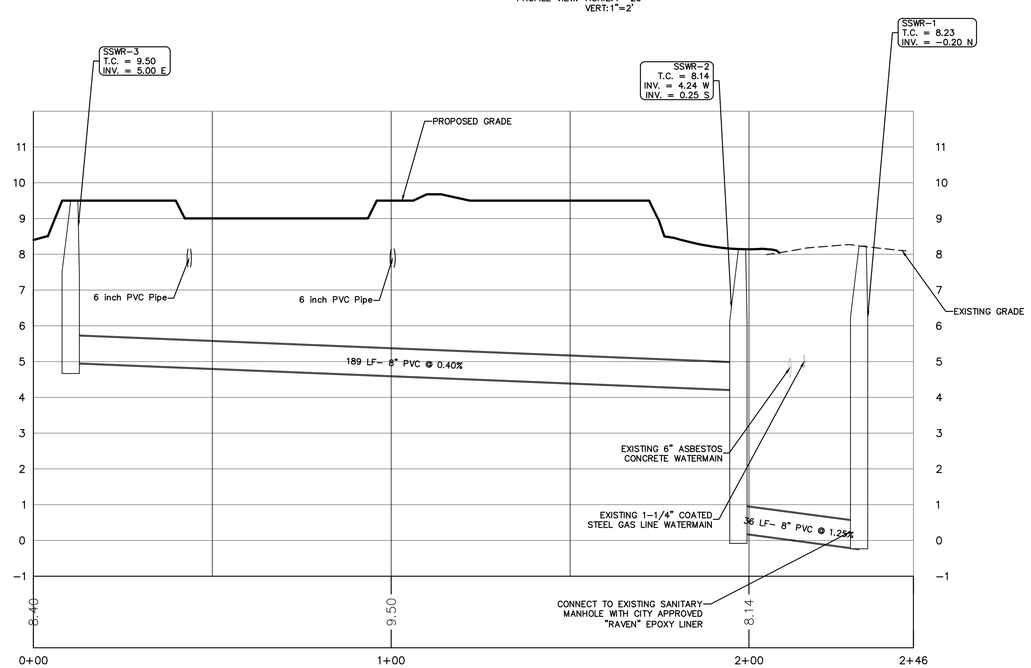

C-PSANITARY

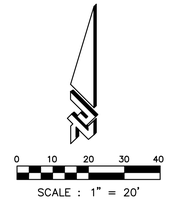

LEGEND:

- TREE CONSERVATION EASEMENT
- WETLAND CONSERVATION EASEMENT
- WETLAND BUFFER
- EXISTING WETLANDS
- PERMEABLE CONCRETE/ PAVERS
- CONCRETE
- PROPOSED SANITARY MAIN AND MANHOLE
- SS — PROPOSED SANITARY SERVICE
- W — PROPOSED WATERMAIN
- PROPOSED FIRE HYDRANT ASSEMBLY
- PROPOSED GATE VALVE
- PROPOSED FIRE DEPARTMENT CONNECTION

ZEV COHEN & ASSOCIATES, INC.
300 INTERCHANGE BLVD., STE. C
DAYTONA BEACH, FL 32114
WWW.ZEVCOHEN.COM
(EB 6516)
CIVIL ENGINEERING
LANDSCAPE ARCHITECTURE
ENVIRONMENTAL
PLANNING
TRANSPORTATION
(LC 42)

NO.	DATE	BY	SUBMITTALS / REVISIONS
1	03-24-23	MT	REVISED PER CITY COMMENTS
2	04-24-23	MT	REVISED PER CITY AND DISTRICT COMMENTS
3	05-26-23	SA	REVISED PER CITY COMMENTS

COASTAL OAKS
FINAL ENGINEERING PLANS
SANITARY SEWER PLAN & PROFILE

CITY OF PORT ORANGE — VOLUSIA COUNTY, FLORIDA

PROJECT NO: ZC 22119
DESIGNED BY: BB
DRAFTED BY: MT
CHECKED BY: BB
DRAWING FILE: 22119-SSWR PROFILE
XREF'S: 22119-BASE.DWG
XREF'S: 22119-SURV.DWG

ROBERT J. BALL LICENSE No PE60001 STATE OF FLORIDA PROFESSIONAL ENGINEER

Digitally signed by Robert J Ball
DN: c=US, o=ZEV COHEN & ASSOCIATES INC., ou=EMAIL=robert.j.ball@zevcohen.com, cn=ROBERT J BALL
Date: 2023.05.26 09:52:05 -04'00'

ROBERT J. BALL, P.E., NO.60001
NOT VALID WITHOUT SEAL

SHEET: C10 OF 15

R:\22119 MCDONAY HERBERT STREET PROPERTY - P.O\FINAL ENGINEERING PLANS\COAOAKS\22119-SSWR PROFILE.DWG - PRINTED 5/31/2023 8:03 AM

1. WATER DISTRIBUTION SYSTEM SHALL BE DESIGNED TO COMPLY WITH THE CITY'S LATEST FIRE/WATER FLOW CODE. ALL DEDICATED FIRE LINES SHALL BE INDEPENDENT OF ALL OTHER DOMESTIC WATER SERVICES.
2. ALL SINGLE AND DOUBLE RESIDENTIAL WATER SERVICES SHALL BE ENDOT ENDOPURE 1". COMMERCIAL SERVICES SHALL BE 1" OR 2" - NO 1-1/2" SERVICES ARE ALLOWED. POLYETHYLENE TUBING SHALL BE USED, IN ACCORDANCE WITH THE FOLLOWING SPECIFICATIONS:
   A. POLYETHYLENE TUBING SHALL BE CTS 3408 HIGH DENSITY TUBING, BLUE IN COLOR, AND RATED FOR A MINIMUM OF 200 PSI WITH SDR OF 9 (CTS)
   B. THE TUBING SHALL COME WITH A LIFETIME WARRANTY
   C. THE TUBING SHALL HAVE A VIRGIN HIGH DENSITY POLYETHYLENE CENTER FOR WHICH THE MANUFACTURER SHALL FURNISH A CERTIFICATE OF PURITY
   D. THE TUBING SHALL HAVE UV PROTECTION AND SHALL NOT BE AFFECTED BY DIRECT SUNLIGHT. THE TUBING SHALL COMPLY WITH OR EXCEED THE APPLICABLE STANDARDS OF ASTM D1248, D3350, D2239, D2737, NSF 14 AND AWWA C901
3. WATER SERVICES SHALL BE NORMALLY DOUBLE 1" SERVICES LOCATED AT SIDE LOT LINES. AT LOCATIONS WHERE SERVICES NEED TO BE OFFSET, SUCH AS AT FIRE HYDRANTS, FPL TRANSFORMERS, ETC., 1" SINGLE SERVICES SHALL BE SPECIFIED. THESE SERVICES MAY BE OFFSET A MAXIMUM OF 2' FROM SIDE LOT LINES.
4. APPROVED WATER VALVE TYPES ARE THE FOLLOWING:
   - RESILIENT SEATED GATE VALVES EQUAL TO OR LESS THAN 24" DIAMETER, PER AWWA C-515
   - BUTTERFLY VALVES GREATER THAN 24" DIAMETER, PER AWWA C-504
   - TAPPING VALVES WITH MECHANICAL TAPPING SLEEVE
5. WATER VALVES SHALL BE PLACED AT ALL STREET INTERSECTIONS AND AT MAXIMUM SPACINGS OF 1,000'.
6. AT ALL WATER MAIN TEES AND CROSSES, VALVES SHALL BE INSTALLED ON ALL LEGS EXCEPT ONE.
7. WATER MAINS SHALL BE C-900 PVC, BLUE IN COLOR, OR DIP PRESSURE CLASS 350 STANDARD CEMENT LINED UNLESS OTHERWISE APPROVED BY THE CITY. WATER MAINS 10" OR GREATER SHALL BE DIP.
8. PVC FITTINGS 4-INCH THROUGH 36-INCH SHALL BE PVC (OR DIP WITH PROTECTO 401) INJECTION-MOLDED OR FABRICATED AS SPECIFIED, MADE OF MATERIALS MEETING OR EXCEEDING THE REQUIREMENTS OF CELL CLASS 12454-B MATERIAL AS DEFINED IN ASTM D1784. FABRICATED FITTINGS SHALL BE MANUFACTURED WITH PIPE THAT MEETS OR EXCEEDS AWWA C-905 STANDARD, AND SHALL BE FIBERGLASS REINFORCED TO A PRESSURE RATING OF 165 PSI. ALL PVC OR MECHANICAL JOINT FITTINGS MUST COMPLY WITH OR EXCEED ANSI/AWWA C907, UNI-B-14 STANDARDS AS THEY APPLY TO THE APPROPRIATE SIZE RANGE AND METHOD OF MANUFACTURE.
9. ALL HDPE PIPE UTILIZED FOR WATER, FORCE MAIN AND/OR RECLAIMED WATER MAIN EXTENSIONS SHALL BE SDR 11 WITH #10 COPPERHEAD TRACER WIRE UNLESS SPECIFICALLY NOTED OTHERWISE. THE HDPE PIPE SHALL BE SIZED TO MATCH THE EXTERNAL DIAMETER OF THE PVC OR DIP PIPE TO WHICH IT IS ATTACHED.
10. ALL VALVES 2" AND LARGER SHALL BE S RESILIENT SEATED GATE VALVES (CORP STOPS ARE NOT ACCEPTABLE).
11. MEGALUGS, BOLTLESS RESTRAINED JOINTS OR GRIPPER GASKETS SHALL BE USED ON ALL RESTRAINED JOINT INSTALLATIONS. MINIMUM DEPTH OF BURY ON PIPES NOT MEETING REQUIRED COVER REQUIREMENTS SHALL FOLLOW THE MOST RECENT DIPRA THRUST RESTRAINT DESIGN GUIDELINES USING TORQUE WRENCHES PER MANUFACTURERS RECOMMENDATION.
12. WATER MAINS SHALL HAVE A MINIMUM COVER OF 36 INCHES AND A MAXIMUM DEPTH OF 48 INCHES FROM FINAL GRADE. CONFLICT LOCATIONS OR SPECIAL CIRCUMSTANCES NOT MEETING THESE REQUIREMENTS MAY BE APPROVED WHEN IT IS DETERMINED TO BE IN THE BEST INTEREST OF THE CITY.

STANDARD CONSTRUCTION DETAIL
POTABLE WATER DESIGN NOTES
FILE NAME W1.DOC
DETAIL REF: W-1
REV. 12/18

13. WATER MAINS SHALL BE INSTALLED APPROXIMATELY 4' OFF THE BACK OF CURB OR AS APPROVED BY THE CITY. FOR CONSTRUCTION PURPOSES, THE PLANS SHALL DIMENSION THE PROPOSED LOCATIONS OF ALL WATER MAINS MEASURED FROM THE BACK OF CURB (OR EDGE OF PAVEMENT, IF NO CURB IS USED).
14. 3" METALLIZED PIPE LOCATION TAPE SHALL BE LOCATED BETWEEN 15" AND 24" BELOW FINISHED GRADE OR AS SPECIFIED BY MANUFACTURER FOR ALL PVC LINES. MARKER TAPE SHALL BE USED ON ALL DUCTILE IRON PIPE, AS WELL.
15. LANDSCAPE PLANS SHALL CLEARLY DEPICT THE DESIGN LOCATION OF PLANTINGS RELATIVE TO THE LOCATION OF PUBLIC UTILITIES AND STORMWATER INFRASTRUCTURE IN ORDER TO EVALUATE POTENTIAL CONFLICTS.
16. THE FIRE DEPARTMENT CONNECTION (FDC) FOR BUILDINGS WITH A FIRE PROTECTION SPRINKLER SYSTEM MUST BE WITHIN 50' OF UNOBSTRUCTED PATH TO A FIRE HYDRANT LOCATION APPROVED BY THE FIRE MARSHALL AND/OR PUBLIC UTILITIES ENGINEER.
17. A MINIMUM OF ONE FIRE HYDRANT SHALL BE LOCATED AT EVERY INTERSECTION. OTHER FIRE HYDRANTS SHALL BE LOCATED SO AS TO PRODUCE A MAXIMUM 250' FEET AND/OR MEETING THE LATEST NFPA CODE HOSE LAY REQUIREMENT ALONG THE STREET FOR ALL RESIDENTIAL BUILDINGS. FIRE HYDRANTS MAY NOT BE INSTALLED WITHIN 20' OF ANY ELECTRICAL TRANSFORMER.
18. NEW OR RELOCATED, UNDERGROUND MAINS SHALL BE LAID TO PROVIDE THE FOLLOWING MINIMUM HORIZONTAL SEPARATIONS (OUTSIDE TO OUTSIDE):

	WATER	STORM GRAVITY	STORM FORCE	RECLAIM	SANITARY GRAVITY	SANITARY FORCE
WATER		3'	3'	3'	6', PREFERRED 10'	6', PREFERRED 10'
STORM GRAVITY	3'		3'	3'	6', PREFERRED 10'	6', PREFERRED 10'
STORM FORCE	3'	3'		3'	6', PREFERRED 10'	6', PREFERRED 10'
RECLAIM	3'	3'	3'		6', PREFERRED 10'	6', PREFERRED 10'
SANITARY GRAVITY	6', PREFERRED 10'	6', PREFERRED 10'	6', PREFERRED 10'	6', PREFERRED 10'		6', PREFERRED 10'
SANITARY FORCE	6', PREFERRED 10'	6', PREFERRED 10'	6', PREFERRED 10'	6', PREFERRED 10'	6', PREFERRED 10'	

19. A 3' MINIMUM HORIZONTAL SEPARATION BETWEEN THE WATER AND SANITARY GRAVITY MAINS SHALL BE ALLOWED WHEN THE WATER MAIN IS INSTALLED IN A SEPARATE TRENCH OR ON AN UNDISTURBED EARTH SHELF AT LEAST 6" ABOVE THE SANITARY GRAVITY MAIN.

STANDARD CONSTRUCTION DETAIL
POTABLE WATER DESIGN NOTES
(CONTINUED)
FILE NAME W1.DOC
DETAIL REF: W-1.1
REV. 12/18

20. NEW OR RELOCATED, UNDERGROUND MAINS SHALL BE LAID TO PROVIDE THE FOLLOWING MINIMUM CROSSING/VERTICAL SEPARATIONS (OUTSIDE TO OUTSIDE):

	WATER	STORM GRAVITY	STORM FORCE	RECLAIM	SANITARY GRAVITY	SANITARY FORCE
WATER		OVER STORM GRAVITY 6", PREFERRED 12"	OVER STORM FORCE 12"	OVER RECLAIM 12"	OVER SANITARY GRAVITY 6", PREFERRED 12"	OVER SANITARY FORCE 12"
		UNDER STORM GRAVITY 12"	UNDER STORM FORCE 12"	UNDER RECLAIM 12"	UNDER SANITARY GRAVITY 12"	UNDER SANITARY FORCE 12"
STORM GRAVITY	OVER WATER 12"		OVER STORM FORCE 6"	OVER RECLAIM 6", PREFERRED 12"	OVER SANITARY GRAVITY 6", PREFERRED 12"	OVER SANITARY FORCE 6", PREFERRED 12"
	UNDER WATER 6", PREFERRED 12"		UNDER STORM FORCE 6"	UNDER RECLAIM 12"	UNDER SANITARY GRAVITY 12"	UNDER SANITARY FORCE 12"
STORM FORCE	OVER WATER 12"	OVER STORM GRAVITY 6"		OVER RECLAIM 12"	OVER SANITARY GRAVITY 12"	OVER SANITARY FORCE 12"
	UNDER WATER 12"	UNDER STORM GRAVITY 6"		UNDER RECLAIM 12"	UNDER SANITARY GRAVITY 12"	UNDER SANITARY FORCE 12"
RECLAIM	OVER WATER 12"	OVER STORM GRAVITY 12"	OVER STORM FORCE 12"		OVER SANITARY GRAVITY 12"	OVER SANITARY FORCE 12"
	UNDER WATER 12"	UNDER STORM GRAVITY 6", PREFERRED 12"	UNDER STORM FORCE 12"		UNDER SANITARY GRAVITY 12"	UNDER SANITARY FORCE 12"
SANITARY GRAVITY	OVER WATER 12"	OVER STROM GRAVITY 12"	OVER STORM FORCE 12"	OVER RECLAIM 12"		OVER SANITARY FORCE 12"
	UNDER WATER 6", PREFERRED 12"	UNDER STORM GRAVITY 6", PREFERRED 12"	UNDER STORM FORCE 12"	UNDER RECLAIM 12"		UNDER SANITARY FORCE 12"
SANITARY FORCE	OVER WATER 12"	OVER STORM GRAVITY 12"	OVER STORM FORCE 12"	OVER RECLAIM 12"	OVER SANITARY GRAVITY 12"	
	UNDER WATER 12"	UNDER STORM GRAVITY 6", PREFERRED 12"	UNDER STORM FORCE 12"	UNDER RECLAIM 12"	UNDER SANITARY GRAVITY 12"	

STANDARD CONSTRUCTION DETAIL
POTABLE WATER DESIGN NOTES
(CONTINUED)
FILE NAME W1.DOC
DETAIL REF: W-1.2
REV. 12/18

1. THE CITY'S PUBLIC UTILITIES DEPARTMENT (386) 506-5750 SHALL BE GIVEN A MINIMUM OF 2 BUSINESS DAYS ADVANCE NOTICE (NOT INCLUDING HOLIDAYS OR WEEKENDS) PRIOR TO BEGINNING ANY POTABLE WATER SYSTEM CONSTRUCTION.
2. ALL WORK PERFORMED ON THE POTABLE WATER FACILITIES OWNED OR PROPOSED TO BE OWNED BY THE CITY SHALL BE CONSTRUCTED BY A STATE CERTIFIED UNDERGROUND UTILITY CONTRACTOR OR GENERAL CONTRACTOR LICENSED IN THE STATE OF FLORIDA AND REGISTERED WITH THE CITY.
3. NEWLY CONSTRUCTED POTABLE WATER SYSTEM EXTENSIONS MAY NOT BE USED PRIOR TO FINAL TESTING, CLEARANCE AND ACCEPTANCE BY THE CITY OF PORT ORANGE. THIS INCLUDES CONSTRUCTION WATER REQUIRED FOR SEWER LINE CLEANING OR RELATED USES.
4. ALL TAPPING OF MAINS SHALL BE PERFORMED BY THE CITY AND BILLED IN ACCORDANCE WITH THE ADOPTED FEE RESOLUTION. SCHEDULING OF THESE CONNECTIONS OR TAPPINGS SHALL REQUIRE A MINIMUM OF 2 BUSINESS DAYS, DIRECTED TO THE CITY'S DESIGNATED SITE INSPECTOR WHO SHALL COORDINATE THE WORK DIRECTLY WITH THE PUBLIC UTILITIES DEPARTMENT. SUBSEQUENTLY, THE CONNECTION SHALL BE SCHEDULED TO COMMENCE BETWEEN 8:00 A.M. AND NOON ON THE APPROPRIATE DAY.
5. CONTRACTOR SHALL PREPARE A SAFE, SECURE AND DRY EXCAVATION FOR THE TAPPING OF MAINS BY THE CITY. THE BOTTOM OF THE EXCAVATION SHALL HAVE A MINIMUM OF 6" THICK BEDDING OF #57 STONE. ALL EXCAVATIONS GREATER THAN 5 FEET IN DEPTH SHALL COMPLY WITH THE TRENCH SAFETY ACT.
6. THE CITY RESERVES THE RIGHT TO REQUIRE TIE-IN CONNECTIONS TO BE PERFORMED DURING PERIODS OF LOW FLOW (MIDNIGHT TO 6:00 A.M.) IN ORDER TO MINIMIZE SERVICE DISRUPTION TO EXISTING CUSTOMERS. THE INSTALLATION OF LINE STOPPING DEVICES ON PRESSURE MAIN (POTABLE WATER, RECLAIM WATER AND SANITARY FORCE MAINS) MAY BE REQUIRED ON ANY REQUESTED UTILITY OUTAGE AT THE DISCRETION OF PUBLIC UTILITIES DEPARTMENT TO MINIMIZE INTERRUPTION TO EXISTING UTILITY CUSTOMERS.
7. ALL METERS SHALL BE PROVIDED BY THE CITY IN ACCORDANCE WITH THE ADOPTED FEE RESOLUTION. METERS AND VAULTS FOR METERS 2" OR LESS WILL BE PROVIDED AND INSTALLED BY THE CITY. METERS 4" OR GREATER WILL BE PROVIDED BY THE CITY AND INSTALLED BY THE OWNER/DEVELOPER/CONTRACTOR. ALL UNDERGROUND VAULTS FOR METERS 4" OR GREATER WILL BE PROVIDED AND INSTALLED BY THE OWNER/DEVELOPER/CONTRACTOR. NOTE: LARGE COMMERCIAL RECLAIMED WATER METERS GREATER THAN 4" TAKE A MINIMUM OF 6 WEEKS FOR DELIVERY AFTER FEES ARE PAID TO THE CITY.
8. DEWATERING SHALL BE PROVIDED TO KEEP GROUNDWATER ELEVATION A MINIMUM OF 6 INCHES BELOW WATER MAIN BEING LAID.
9. ALL WATER MAINS SHALL BE LAID ON A FIRM FOUNDATION WITH ALL UNSUITABLE MATERIAL (MUCK, ROCK, COQUINA, ETC.) REMOVED AND REPLACED WITH CLEAN GRANULAR MATERIAL.
10. TRENCHES SHALL BE BACKFILLED WITH MATERIAL ACCEPTABLE TO THE CITY WITH A MINIMUM COMPACTION OF 98% IN PAVED AREAS AND 95% IN UNPAVED AREAS IN ACCORDANCE WITH AASHTO T-180.
11. IT SHALL BE THE CONTRACTORS RESPONSIBILITY TO ENSURE THAT TRENCH COMPACTION TESTS BE PROVIDED AT POINTS 1 FOOT ABOVE THE PIPE AND AT 1 FOOT VERTICAL INTERVALS TO FINISH GRADE, AT A MINIMUM SPACING OF EVERY 300 FEET.
12. ALL PVC PIPE SHALL BE STORED IN SUCH A WAY AS TO PREVENT WARPING, DEFLECTION, OR ANY DEFORMATION.
13. NO USED, RE-USED, RUSTED, SECOND HAND, OR ANY MATERIAL THAT IS NOT NEW SHALL BE USED IN ANY UTILITY IMPROVEMENT PROJECTS WITHIN THE CITY'S SERVICE AREA.
14. ALL POTABLE WATER MAINS SHALL USE A THRUST RESTRAINT JOINT METHOD IN COMPLIANCE WITH THE DUCTILE IRON PIPE RESEARCH ASSOCIATION (DIPRA) GUIDELINES. IN THE EVENT THAT PVC PIPE IS SPECIFIED, THE RESTRAINT JOINT SHALL BE MODIFIED IN ACCORDANCE WITH THE RECOMMENDED ADDITIONAL RESTRAINT LENGTH REQUIRED FOR PIPE WRAPPED WITH POLYETHYLENE.

STANDARD CONSTRUCTION DETAIL
POTABLE WATER CONSTRUCTION NOTES
FILE NAME W2.DOC
DETAIL REF: W-2
REV. 12/18

15. AT THE UTILITY CROSSINGS, ONE FULL LENGTH OF WATER MAIN PIPE SHALL BE CENTERED ABOVE OR BELOW THE OTHER PIPELINE SO THE WATER MAIN JOINTS WILL BE AS FAR AS POSSIBLE FROM THE OTHER PIPELINE. ALTERNATIVELY, AT SUCH CROSSINGS, THE PIPES SHALL BE ARRANGED SO THAT ALL WATER MAIN JOINTS ARE AT LEAST THREE FEET FROM ALL JOINTS IN VACUUM-TYPE SANITARY SEWERS, STORM SEWERS, STORMWATER FORCE MAINS OR PIPELINES CONVEYING RECLAIMED WATER REGULATED UNDER PART III OF CHAPTER 62-610 FAC AND AT LEAST SIX FEET FROM ALL JOINTS IN GRAVITY- OR PRESSURE-TYPE SANITARY SEWERS, WASTEWATER FORCE MAINS, OR PIPELINES CONVEYING RECLAIMED WATER NOT REGULATED UNDER PART III OF CHAPTER 62-610, FAC.
16. ALL WATER SERVICE ENDINGS SHALL BE MARKED WITH A 2"X 4" LUMBER (PRESSURE TREATED) EXTENDING 4 FEET ABOVE GRADE, WITH WATER SERVICES SECURED 12" MAXIMUM ABOVE THE GROUND. ALL SERVICES SHALL BE LOCKED AT THE TIME OF FINAL INSPECTION BY THE CONTRACTOR IN THE PRESENCE OF THE CITY INSPECTOR OR CITY PERSONNELL, AFTER THEY HAVE BEEN INSPECTED AND VERIFIED TO OPERATE PROPERLY.
17. ALL WATER VALVES SHALL BE ADJUSTED TO FINISHED GRADE AND THE CAPS PAINTED BLUE TO MAKE THEM PLAINLY VISIBLE.
18. WATER SYSTEMS SHALL BE PRESSURE TESTED AT 150 PSI STATIC PRESSURE FOR A PERIOD OF 2 HOURS PER AWWA STANDARDS.
19. IN AREAS WHERE RECLAIMED WATER IS NOT AVAILABLE THE CONTRACTOR SHALL BE REQUIRED TO (UPON SATISFACTORY COMPLETION OF THE PRESSURE TEST) TRANSFER THE WATER FROM THE POTABLE WATER LINES TO THE RECLAIMED WATER LINES FOR UTILIZATION IN THEIR PRESSURE TEST.
20. THE CONTRACTOR SHALL BE REQUIRED TO PIG ALL POTABLE MAINS 6" AND LARGER IN DIAMETER AND PRIMARY DISTRIBUTION MAINS LOCATED ON COLLECTOR AND ARTERIAL ROADWAYS. ALL PIGS SHALL BE NEW. NO FOAM PIGS ARE ALLOWED. LAUNCHING AND EXTRACTION POINTS SHALL BE DETERMINED BY THE CONTRACTOR. ALL PIGGING OPERATIONS SHALL BE WITNESSED BY A PUBLIC UTILITIES REPRESENTATIVE OR A CITY UTILITY INSPECTOR
21. ALL PROPOSED POTABLE WATER MAINS SHALL BE FLUSHED, DISINFECTED, PRESSURE TESTED AND BACTERIOLOGICALLY CLEARED FOR SERVICE WHEN APPROPRIATE IN ACCORDANCE WITH THE LATEST AWWA STANDARDS AND THE FLORIDA DEPARTMENT OF ENVIRONMENTAL PROTECTION REQUIREMENTS. THE CONTRACTOR SHALL NOTIFY THE CITY'S DESIGNATED SITE INSPECTOR WHO SHALL COORDINATE WITH CITY PERSONNEL AT THE WATER TREATMENT PLANT AT LEAST 2 BUSINESS DAYS PRIOR TO BEGINNING FLUSH OF THE MAINS AND PRIOR TO THE COMMENCEMENT OF PRESSURE TESTING.
22. THE PHYSICAL TAKING OF WATER SAMPLE FOR BACTERIOLOGICAL TESTING SHALL BE DONE BY THE CITY'S LABORATORY PERSONNEL. THE CONTRACTOR SHALL NOTIFY THE CITY'S DESIGNATED SITE INSPECTOR AT LEAST TWO BUSINESS DAY PRIOR TO NEEDING SAMPLES TAKEN TO COORDINATE WITH THE LABORATORY. ALL SAMPLING FORMS WILL BE COMPLETED BY THE CITY'S DESIGNATED LABORATORY PERSONNEL. THE CITY'S LABORATORY WILL CONDUCT THE TESTING IN ACCORDANCE WITH THE LATEST AWWA STANDARDS AND THE FLORIDA DEPARTMENT OF ENVIRONMENTAL PROTECTION REQUIREMENTS. THE RESULTS WILL BE FORWARDED TO THE CONTRACTOR AND ENGINEER OF RECORD. IF THE INITIAL DISINFECTION OR OTHER RESULTS INDICATE UNACCEPTABLE WATER QUALITY, THE MAIN SHALL BE RE-FLUSHED, RE-SAMPLED AND RE-TESTED. IF CHECK SAMPLES FAIL TO PRODUCE ACCEPTABLE RESULTS, THE CYCLE WILL BE REPEATED (FLUSH, CHLORINATE, SAMPLE, TEST, AND RE-FLUSH, RE-SAMPLE, RE-TEST, AS NEEDED) UNTIL SATISFACTORY RESULTS ARE OBTAINED.

STANDARD CONSTRUCTION DETAIL
POTABLE WATER CONSTRUCTION NOTES
(CONTINUED)
FILE NAME W2.DOC
DETAIL REF: W-2.1
REV. 12/18

23. WHEN THE PUBLIC UTILITIES OFFICE RECEIVES POTABLE WATER CLEARANCE REQUEST REQUIRING SIGNATURE, THE CITY'S DISTRIBUTION SUPERVISOR AND/OR DESIGNATED SITE INSPECTOR WILL BE CONTACTED TO INDEPENDENTLY VERIFY THAT THE SYSTEM IS IN PROPERLY FUNCTIONING ORDER (i.e. ALL VALVES, HYDRANTS, AND WATER SERVICES ARE ACCESSIBLE AND OPERABLE). SIMULTANEOUSLY, THE CITY MAY ALSO TAKE A RANDOM BACTERIOLOGICAL SAMPLE WITHIN THE NEW SYSTEM TO VERIFY THAT WATER IS SAFE FOR CONSUMPTION. ONCE THE DISTRIBUTION SUPERVISOR AND/OR DESIGNATED SITE INSPECTOR HAVE VERIFIED THAT THE SYSTEM IS IN PROPER FUNCTIONING ORDER AND THAT THE BACTERIOLOGICAL SAMPLE(S) INDICATE THE WATER IS SAFE FOR CONSUMPTION, THE PUBLIC UTILITIES OFFICE WILL THEN SIGN OFF ON THE WATER CLEARANCE REQUEST.
24. UPON CONSTRUCTION COMPLETION AND ACCEPTANCE OF THE SYSTEM, IT SHALL BE THE DESIGN ENGINEER'S RESPONSIBILITY TO ENSURE THAT THE SYSTEM IS PROPERLY CERTIFIED AND ACCEPTED BY THE DEPARTMENT OF HEALTH AND AS-BUILTS ARE PROVIDED TO THE CITY PRIOR TO ANY PUBLIC USE OF THIS SYSTEM.
25. UPON FINAL ACCEPTANCE OF NEW WATER SYSTEMS, WATER VALVES SHALL BE COMPLETELY OPENED BY PUBLIC UTILITIES PERSONNEL. AT NO TIME SHALL CONTRACTOR OPERATE ANY EXISTING VALVES.
26. ALL FIRE HYDRANTS SHALL BE LOCATED TO MAKE THEM EASILY ACCESSIBLE TO FIRE PERSONNEL IN CASE OF A FIRE. THE PRIMARY HYDRANT PORT SHALL ALWAYS FACE THE STREET. 5 FEET MINIMUM RADIUS CLEAR AREA AROUND THE FIRE HYDRANT SHALL BE MAINTAINED.
27. ALL WATER SERVICES SHALL BE MARKED WITH AN "/\" SAW CUT INTO THE CURB OR BY METAL TABS SET INTO THE PAVEMENT.
28. ALL WATER VALVES SHALL BE MARKED WITH AN "X" SAW CUT INTO THE CURB OR BY METAL TABS SET INTO THE PAVEMENT. BLOW-OFFS SHALL BE MARKED SIMILARLY, AS WELL. REVERSE TAPPING VALVE SHALL BE MARKED WITH AN "X ↑" SAW CUT INTO THE CURB OR PAVEMENT WITH THE ARROW POINTING TO THE DIRECTION OF THE PRESSURE MAIN RUN.

STANDARD CONSTRUCTION DETAIL
POTABLE WATER CONSTRUCTION NOTES
(CONTINUED)
FILE NAME W2.DOC
DETAIL REF: W-2.2
REV. 12/18

FIRE HYDRANT (5 ¼" BARREL)

MANUFACTURER	MODEL #
AMERICAN AVK CO.	SERIES #2780
AMERICAN DARLING	5 ¼" B-84-B5
CLOW	MEDALLION #F-2545 SS
EJ GROUP, INC.	WATERMASTER 5 ¼" #5CD250
KENNEDY	GUARDIAN K81-D
MUELLER	A423 SUPER CENTURION 250

AIR RELEASE VALVES

MANUFACTURER	MODEL #
VENT-O-MAT	RBX 2521

GATE VALVES AND TAPPING VALVES – RESILIENT SEATED (AWWA C509 AND C515) 24" OR SMALLER (VALVE WEDGE TO BE COMPLETE ENCLOSED WITH EPDM RUBBER)

MANUFACTURER	MODEL #
AMERICAN AVK CO.	SERIES 3, 18, 25, 45, 55, & 66
AMERICAN FLOW CONTROL	SERIES 2500
CLOW	MODEL 2638 AND 2639
KENNEDY	C509, C515
MUELLER	A-2360, A-2361, T-2360 & T-2361

STANDARD CONSTRUCTION DETAIL
POTABLE WATER APPROVED PRODUCTS
FILE NAME W3.DOC
DETAIL REF: W-3
REV. 12/18

WATER SERVICE MATERIALS

DUCTILE IRON

MATERIAL	ASTM A536 MINIMUM GRADE 70-50-5 IN ACCORDANCE WITH AWWA C153 (ANSI A21.53)
PRESSURE	CLASS 350 IN ACCORDANCE WITH AWWA C153 (ANSI A21.53) 350 PSI WATER WORKING PRESSURE
TESTING	IN ACCORDANCE WITH AWWA C153 (ANSI A21.53) THREE TIMES WATER WORKING PRESSURE (350 PSI) BODY CAPABLE OF WITHSTANDING HYDROSTATIC TEST OF 1050 PSI
FLOW	IE EQUAL TO ID OF CLASS 50/51 DUCTILE IRON PIPE, THUS ALLOWING THE FULL FLOW FEATURE
LAYING LENGTH	SHORT BODY (COMPACT)
CEMENT LINING	IN ACCORDANCE WITH AWWA C104 (ANSI A21.4)
MECHANICAL JOINTS	IN ACCORDANCE WITH AWWA C111 (ANSI A21.11)
GASKETS	SBR IN ACCORDANCE WITH AWWA C111 (ANSI A21.11)
TEE HEAD BOLTS	COR-TEN IN ACCORDANCE WITH AWWA C111 (ANSI A21.11)
ACCEPTABLE MANUFACTURERS	TYLER, CLOW, GRIFFIN, U.S. PIPE, UNION FOUNDRY, AMERICAN CAST IRON, OR APPROVED EQUALS

POLYETHYLENE TUBING – (BLUE WITH UV PROTECTION (SDR-9) 1" & 2" ONLY)

MANUFACTURER	MODEL #
ENDOT ENDOPURE	ENDOTRACE W/#10 COPPERHEAD TRACER WIRE

STANDARD CONSTRUCTION DETAIL
POTABLE WATER APPROVED PRODUCTS
FILE NAME W3.DOC
DETAIL REF: W-3.1
REV. 12/18

CORPORATION STOP 1"

MANUFACTURER	MODEL #
FORD	F-1100-4

CURB STOP – STRAIGHT BALL METER VALVE W/ BARREL LOCKS

MANUFACTURER	MODEL #
FORD	B-94-324W (SINGLE SERVICE) B-91-223W (DOUBLE SERVICE)

"U" BRANCH (1" X ¾")

MANUFACTURER	MODEL #
FORD	U-48-43-6.5

JOINTS RESTRAINED – PVC AND DIP

MANUFACTURER	MODEL #
EBBA IRON INC.	SERIES 1100/1500/1600 2000/2500/2800
SIGMA	ONE-LOCK SLD; ONE-LOCK SLC; PV-LOK FOR PVC
SMITH-BLAIR	CAM-LOCK (111 & 120) ; BELL-LOCK (115 & 165)
STAR PIPE	STARGRIP SERIES 1000/1100/1200 3000/ 4000

STANDARD CONSTRUCTION DETAIL
POTABLE WATER APPROVED PRODUCTS
FILE NAME W3.DOC
DETAIL REF: W-3.2
REV. 12/18

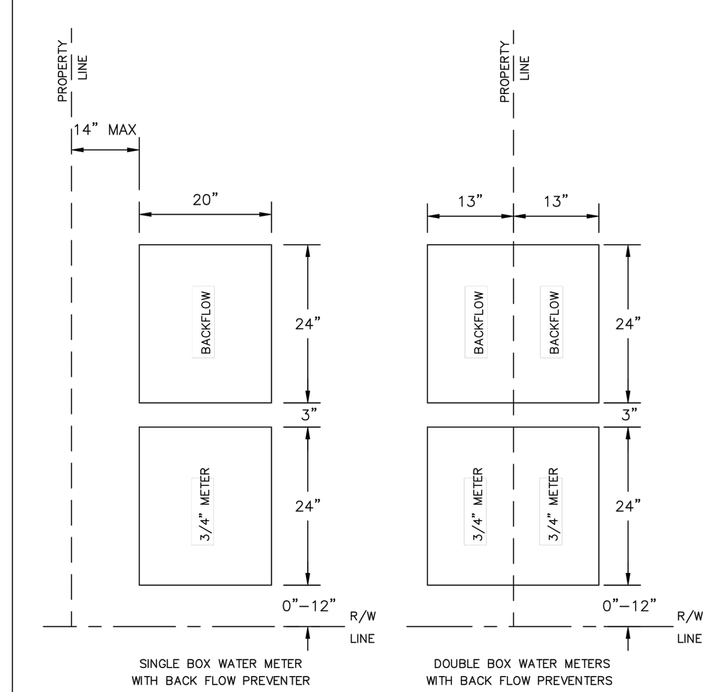

STANDARD CONSTRUCTION DETAIL
POTABLE WATER METER BOX LAYOUT
FILE NAME: W4.DWG
DETAIL REF: W-4
REV. 12/18

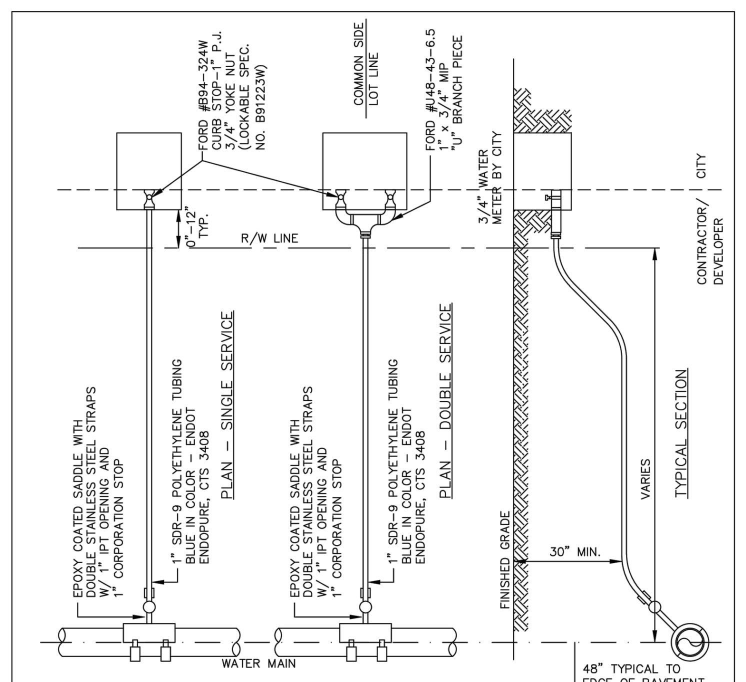

LOCKSEAL	
ITEM #	DESCRIPTION
93280148	HEAD WITH ALUMINUM SEAL
93210140	REGULAR DIAMETER STUD
93280139	KEY

NOTE:
1. ALL VALVES SHALL BE FULL PORT.
2. DEVELOPER SHALL PROVIDE AND INSTALL BULLET LOCKS ON ALL VALVES PRIOR TO FINAL ACCEPTANCE.
3. POLYTUBING SHALL BE CONTINUOUS WITH NO COUPLINGS.

STANDARD CONSTRUCTION DETAIL
3/4"–1" METER SIZES POTABLE WATER SERVICE CONNECTION
FILE NAME: W5.DWG
DETAIL REF: W-5
REV. 12/18

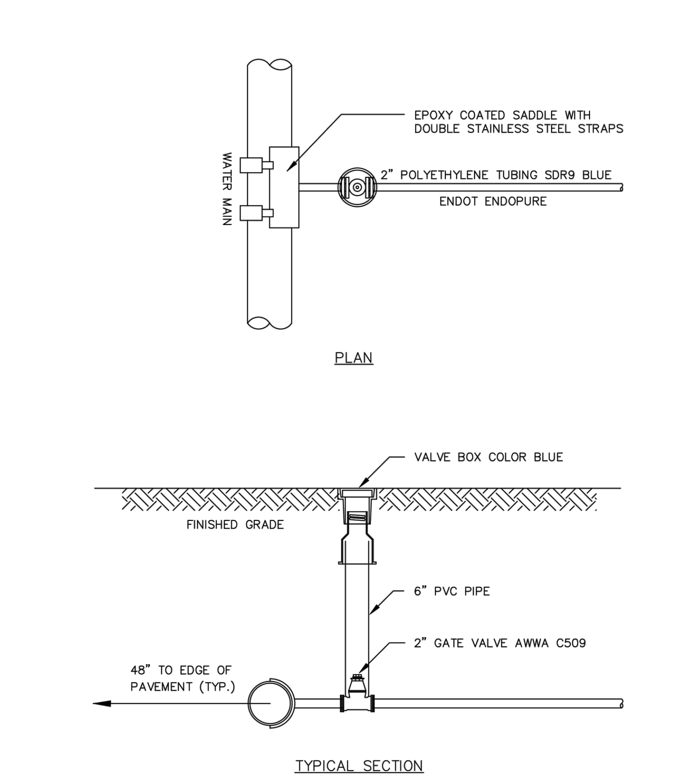

STANDARD CONSTRUCTION DETAIL
2" METER SIZE POTABLE WATER SERVICE CONNECTION
FILE NAME: W7.DWG
DETAIL REF: W-7
REV. 12/18

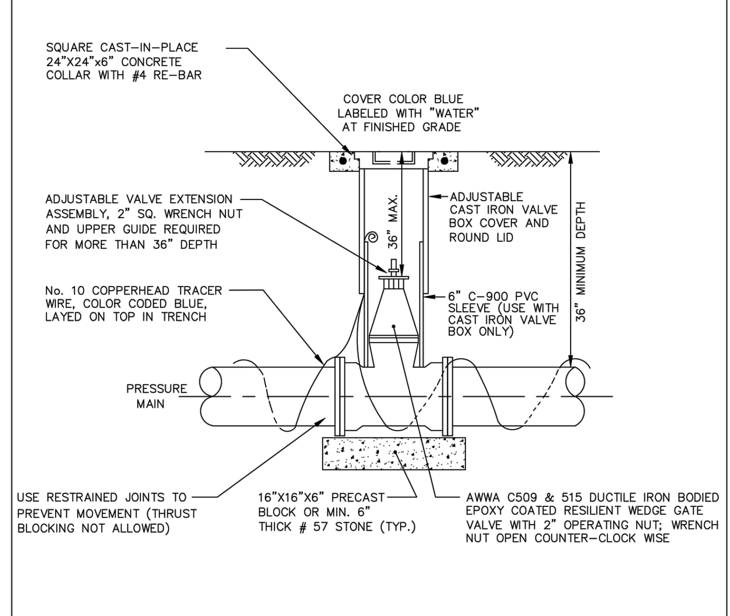

NOTE:
1. BOLT VALVES TO TEE OR CROSS WHEREVER AND WHENEVER APPLICABLE.
2. GATE VALVE WEDGE SHALL BE COMPLETELY ENCAPSULATED WITH EPDM RUBBER.
3. ALL OUTSIDE HEX NUTS, BOLTS AND HARDWARES (EXCEPT MECHANICAL BOLTS SUCH AS "T" BOLTS) SHALL BE MINIMUM 316 STAINLESS STEEL GRADE.

STANDARD CONSTRUCTION DETAIL
4"–16" VALVE SIZE POTABLE WATER VALVE BOX
FILE NAME: W8.DWG
DETAIL REF: W-8
REV. 12/18

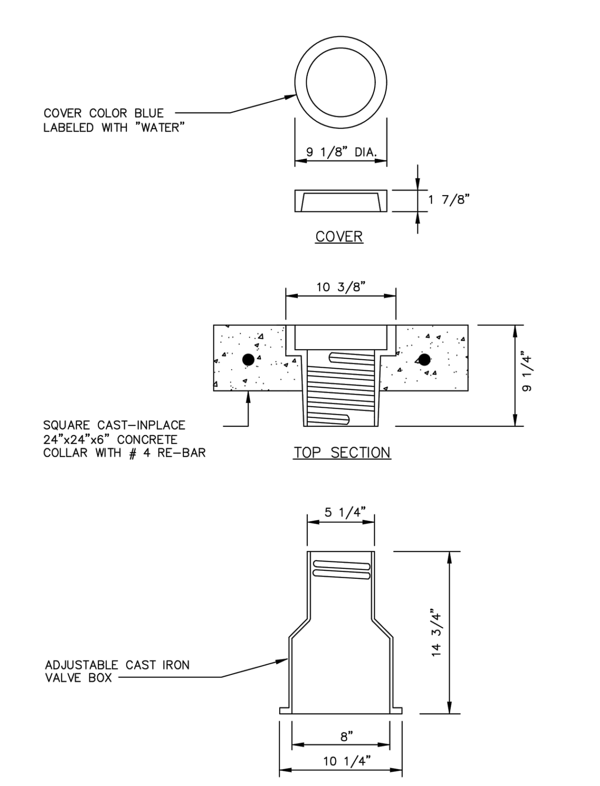

STANDARD CONSTRUCTION DETAIL
POTABLE WATER VALVE BOX COVER AND LID
FILE NAME: W9.DWG
DETAIL REF: W-9
REV. 12/18

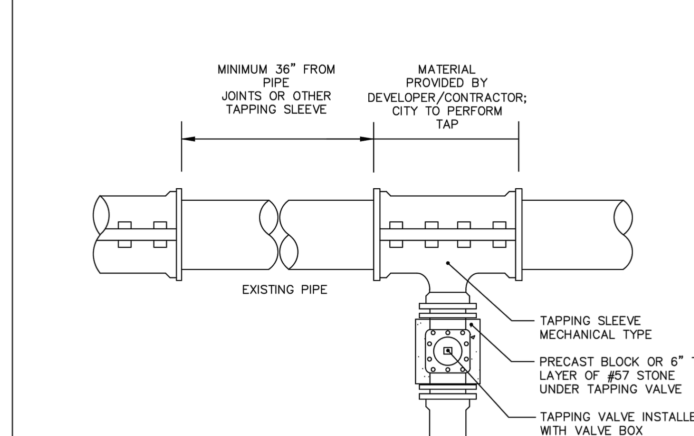

NOTES:
1. TAPPING OF MAINS SHALL BE PERFORMED BY THE CITY AND BILLED IN ACCORDANCE WITH THE ADOPTED FEE RESOLUTION. ALL MATERIALS TO BE PROVIDED BY DEVELOPER/CONTRACTOR.
2. EXCAVATIONS FOR TAPPING WORK TO BE SAFE, SECURE AND DRY, WITH 6" THICK (MIN.) LAYER OF #57 STONE AT BOTTOM.
3. CITY ALLOWS ONLY 1", 2", 4", 6", 8", 10" AND 12" TAPS.
4. REQUIRED RESTRAINED JOINTS TO BE INSTALLED – THRUST BLOCKS ARE NOT PERMITTED.
5. EPOXY COATED STEEL, STAINLESS STEEL SLEEVES WITH 316 STAINLESS STEEL BOLTS ARE PERMITTED FOR ALL TYPES OF PIPE MATERIALS.
6. ALL VALVES 2" OR GREATER SHALL BE GATE VALVES. CORPORATION STOPS ALLOWED ON BLOW–OFFS ONLY.

STANDARD CONSTRUCTION DETAIL
TAPPING VALVE AND SLEEVE
FILE NAME: W15.DWG
DETAIL REF: W-15
REV. 12/18

ZEV COHEN & ASSOCIATES, INC.
300 INTERCHANGE BLVD., STE. C
ORMOND BEACH, FL 32174
WWW.ZEVCOHEN.COM

CIVIL ENGINEERING
LANDSCAPE ARCHITECTURE
ENVIRONMENTAL
PLANNING
TRANSPORTATION
(EB 4516) (LC 62)

NO.	DATE	BY	SUBMITTALS / REVISIONS
1	03-24-23	MT	REVISED PER CITY COMMENTS
2	04-24-23	MT	REVISED PER CITY AND DISTRICT COMMENTS
3	05-26-23	SA	REVISED PER CITY COMMENTS

COASTAL OAKS
FINAL ENGINEERING PLANS
CONSTRUCTION DETAILS

CITY OF PORT ORANGE
VOLUSIA COUNTY, FLORIDA

PROJECT NO: ZC 22119
DESIGNED BY: BB
DRAFTED BY: MT
CHECKED BY: BB
DRAWING FILE: 22119-DET

ROBERT J. BALL LICENSE No PE60001 STATE OF FLORIDA PROFESSIONAL ENGINEER

Digitally signed by Robert J Ball
DN: CN=Robert J Ball, dnQualifier=A01410D00000184CE569AA8000AC4E9, O=ZEV COHEN AND ASSOCIATES INC., C=US
Date: 2023.05.31 09:21:29-04'00'

ROBERT J. BALL, P.E., NO.60001
NOT VALID WITHOUT SEAL

SHEET: C11 OF 15

R:\22119 MCGRAY HERBERT STREET PROPERTY – P:\FINAL ENGINEERING PLANS\CADDWGS\22119–DET.DWG – PRINTED 5/31/2023 9:03 AM

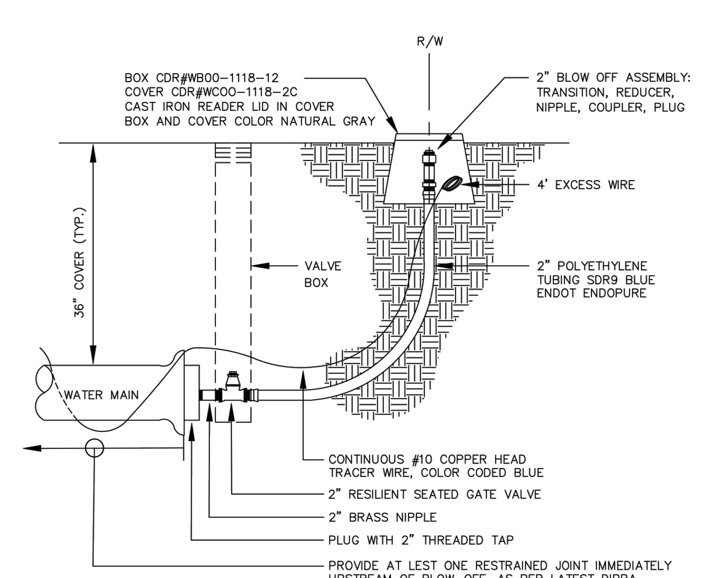

STANDARD CONSTRUCTION DETAIL
POTABLE WATER
BLOW–OFF ASSEMBLY
REV. 12/18
FILE NAME: W18.DWG
DETAIL REF: W-18

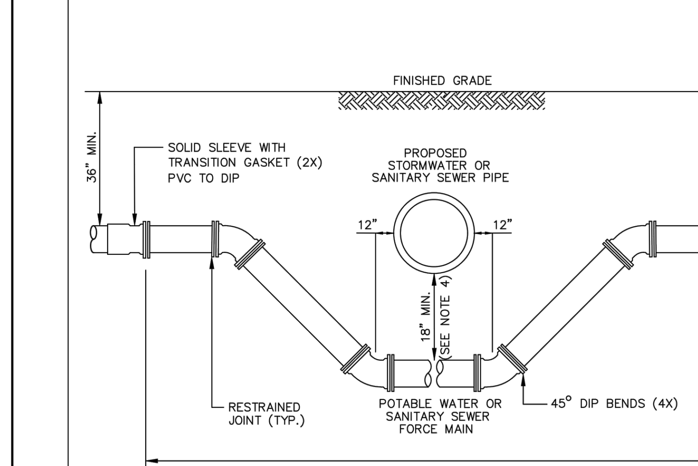

NOTES:

1. LOWERING OF EXISTING POTABLE WATER OR SANITARY SEWER FORCE MAIN BY DEFLECTION METHOD ACCEPTABLE IF FIELD CONDITIONS PERMIT.
2. LENGTH OF SECTION BASED ON MINIMUM LENGTH AS DETERMINED BY DIPRA RESTRAINED JOINT MANUAL.
3. INSTALL RESTRAINED JOINTS, AS REQUIRED, FROM DEFLECTION POINT IN BOTH DIRECTIONS.
4. CONCRETE ENCASEMENT OF SANITARY SEWER MAINS IS AN ALTERNATIVE METHOD OF ADDRESSING A CONFLICT. USE OF ENCASEMENT MUST BE APPROVED BY THE CITY.

STANDARD CONSTRUCTION DETAIL
POTABLE WATER OR SANITARY SEWER
FORCE MAIN DEFLECTION
REV. 12/18
FILE NAME: W23.DWG
DETAIL REF: W-23

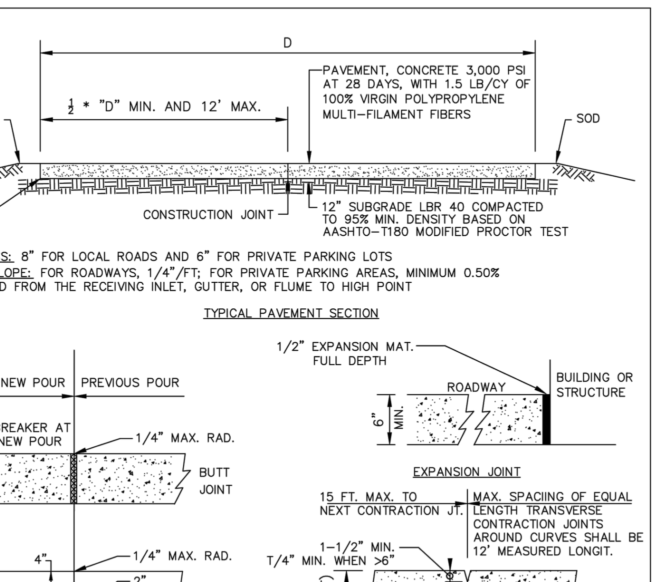

NOTES:

1. CONTRACTION JOINTS MAY BE HAND FORMED, SAWED OR CONSTRUCTED WITH A 1/4" PRE–MOLDED FILLER JOINT. JOINTS MUST BE SAWED BETWEEN 4 AND 18 HOURS AFTER CONCRETE HAS BEEN PLACED.
2. EXPANSION JOINTS TO BE PLACED BETWEEN STRUCTURE AND CURB AND AT ANY PERMANENT STRUCTURE ABUTTING OR WITHIN THE PAVED AREA, INCLUDING SIDEWALKS. USE OF WOOD IS NOT ACCEPTABLE.
3. FINAL DETERMINATION OF CONSTRUCTION JOINT SELECTION AND APPLICATION SHALL BE MADE BY THE ENGINEER OF RECORD BASED ON PROJECT REQUIREMENTS AND LOCATION.
4. CONSTRUCTION JOINTS WITHIN THE SLAB AREA SHOULD NOT CONTAIN PRE–MOLDED EXPANSION JOINT FILLER.
5. CONCRETE PAVEMENT CONSTRUCTION SHALL BE IN ACCORDANCE WITH ACI PUBLICATION 330R–87.

STANDARD CONSTRUCTION DETAIL
CONCRETE PAVEMENT DETAILS
REV. 12/18
FILE NAME: R14.DWG
DETAIL REF: R-14

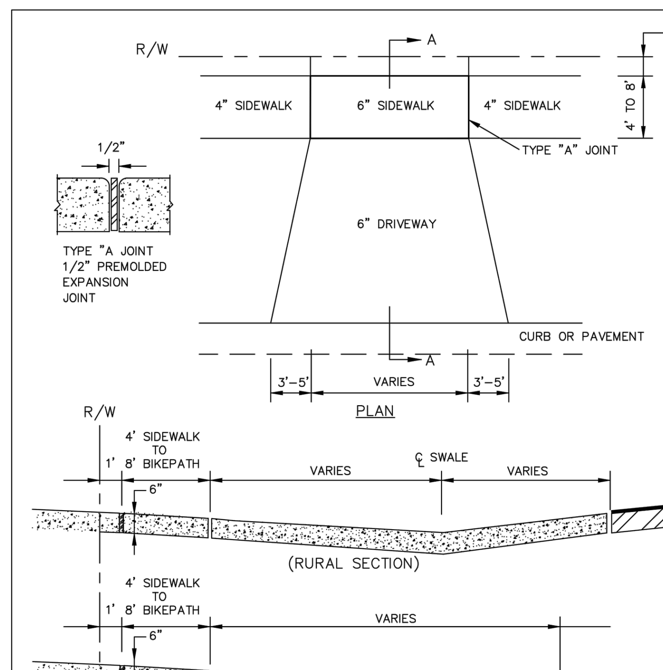

NOTES:

1. DRIVEWAY APRON BASE TO BE COMPACTED AND TESTED TO 98% DENSITY WITH MINIMUM LBR 40 BASED ON AASHTO T–180 MODIFIED PROCTOR TEST.
2. DRIVEWAY APRON CONCRETE – 2,500 PSI AT 28 DAY.

STANDARD CONSTRUCTION DETAIL
DRIVEWAY APRON
REV. 12/18
FILE NAME: R16.DWG
DETAIL REF: R-16

THE CITY'S PUBLIC UTILITIES DEPARTMENT (386) 506-5750 SHALL BE GIVEN A MINIMUM OF 48 HOURS ADVANCE NOTICE (NOT INCLUDING HOLIDAYS OR WEEKENDS) PRIOR TO BEGINNING ANY SANITARY SEWER CONSTRUCTION.

CONSTRUCTION:

1. ALL WORK PERFORMED ON SANITARY SEWER FACILITIES OWNED OR PROPOSED TO BE OWNED BY THE CITY SHALL BE CONSTRUCTED BY AN UNDERGROUND UTILITY CONTRACTOR, OR FLORIDA LICENSED GENERAL CONTRACTOR REGISTERED WITH THE CITY.
2. THE PLANS SHALL DIMENSION THE LOCATION, OF ALL MAINS MEASURED FROM THE BACK OF CURB (OR EDGE OF PAVEMENT, IF NO CURBING EXISTS. LANDSCAPE PLANS SHALL CLEARLY DEPICT THE DESIGN LOCATION OF PLANTINGS RELATIVE TO THE LOCATION OF PROPOSED AND EXISTING PUBLIC UTILITIES AND STORMWATER INFRASTRUCTURE.
3. PROFILE VIEWS SHALL BE PROVIDED FOR ALL SEWER MAINS. PROFILE VIEWS SHALL BE ON THE SAME SHEET AS THE ASSOCIATED PLAN VIEW AND SHALL INCLUDE THE FOLLOWING INFORMATION:
   A. SIZE, SLOPE, LENGTH AND CLASS OF PIPE
   B. MANHOLE RIM AND INVERT ELEVATIONS
   C. UTILITY CROSSINGS WITH VERTICAL SEPARATION
   D. SHOW PROPOSED SEWER AND EXISTING UTILITY
   E. EXISTING GROUND PROFILE
   F. MATCH LINE
   G. VICINITY MAP
   H. PROFILE VIEW STATIONS TO COINCIDE WITH PLAN VIEW STATIONS
4. GREASE INTERCEPTORS ARE REQUIRED FOR ALL COMMERCIAL BUILDINGS HAVING KITCHEN, FOOD PREPARATION OR SERVING FACILITIES AND / OR MISCELLANEOUS USES. GREASE INTERCEPTORS CONSTRUCTED EXTERNAL TO BUILDINGS SHALL BE SIZED IN ACCORDANCE WITH FAC 64-E-6. CALCULATIONS TO DETERMINE SIZING REQUIREMENTS SHALL BE SUBMITTED AS PART OF BUILDING PERMITTING. AN INSPECTION MANHOLE MAY BE REQUIRED IMMEDIATELY DOWN STREAM OF THE GREASE INTERCEPTOR FOR INSPECTION PURPOSES, AS DEEMED APPROPRIATE BY THE CITY.
5. ON ALL EXCAVATION AND BACKFILLING, THE CONTRACTOR SHALL PROVIDE ADEQUATE SHEETING AND BRACING IN ACCORDANCE TO OSHA GUIDELINE IN ORDER TO PROVIDE FOR THE SAFETY OF WORKMEN, AS WELL AS REPRESENTATIVES OF THE CITY, THE DESIGN ENGINEER, AND THE DEVELOPER.
6. ALL PVC. PIPE SHALL BE STORED IN SUCH A WAY AS TO PREVENT WARPING, DEFLECTION, OR DEFORMATION. ANY PIPE DEEMED TO BE MISSHAPED IN ANY WAY FOR ANY REASON SHALL BE REJECTED.
7. NO USED, RE-USED, RUSTED, SECOND HAND, OR ANY MATERIAL THAT IS NOT NEW SHALL BE USED IN ANY UTILITY IMPROVEMENT PROJECTS WITHIN THE CITY SERVICE AREA.
8. THE CONTRACTOR SHALL AT ALL TIMES, DURING PIPE LAYING OPERATIONS DEWATER THE GROUND SUFFICIENTLY TO KEEP THE GROUNDWATER ELEVATION A MINIMUM OF 6" BELOW THE PIPE BEING LAID WITHIN THE AREA OF THE TRENCH.
9. ALL PIPES SHALL BE LAID ON A FIRM FOUNDATION. SOFT OR SPONGY BEDDING FOR PIPES IS NOT ACCEPTABLE. ANY UNSUITABLE MATERIAL SHALL BE REMOVED AND REPLACED WITH A DRY, COMPACTED, GRANULAR MATERIAL SATISFACTORY TO THE CITY. MORTAR TO CONTAIN "HYDRATITE" OR APPROVED EQUAL, TO PREVENT SHRINKAGE. CEMENT USED IN CONCRETE MIX FOR PRECAST STRUCTURES SHALL BE TYPE II, ACID RESISTANT AND SULFIDE RESISTANT CONCRETE.
10. MORTAR TO CONTAIN "HYDRATITE" OR APPROVED EQUAL, TO PREVENT SHRINKAGE. CEMENT USED IN CONCRETE MIX FOR PRECAST STRUCTURES SHALL BE TYPE II, ACID RESISTANT AND SULFIDE RESISTANT CONCRETE.

STANDARD CONSTRUCTION DETAIL
SANITARY SEWER NOTES
REV. 12/18
FILE NAME S1.DOC
DETAIL REF: S-1

11. THE CITY MAY REQUIRE ALL NEW SANITARY SEWER GRAVITY SYSTEMS TO BE SMOKE TESTED PRIOR TO FINAL ACCEPTANCE. ALL TESTING MUST BE DONE IN THE PRESENCE OF THE CITY'S DESIGNATED SITE INSPECTOR.
12. THE CITY OF PORT ORANGE RESERVES THE RIGHT TO REQUIRE THE DEVELOPER TO PERFORM VACUUM TESTING OF ALL SANITARY MANHOLES, AIR TEST SEWER MAINS, AND REQUIRES THAT ALL SANITARY SEWER MAIN LINES BE TELEVISED PRIOR TO FINAL ACCEPTANCE. LATERALS SHALL BE TELEVISED UPON DEMAND BY THE CITY PRIOR TO FINAL ACCEPTANCE WHEN IT IS SUSPECTED THAT A PROBLEM EXISTS.
13. ALL TAPPING OF PRESSURE MAINS AND CORING OF MANHOLES SHALL BE PERFORMED BY THE CITY AND BILLED IN ACCORDANCE WITH THE ADOPTED FEE RESOLUTION. SCHEDULING OF THESE CONNECTIONS SHALL REQUIRE A MINIMUM 48 HOURS NOTIFICATION DIRECTED TO THE CITY'S DESIGNATED SITE INSPECTOR WHO SHALL COORDINATE THE WORK DIRECTLY WITH THE PUBLIC UTILITIES DEPARTMENT. SUBSEQUENTLY, THE CONNECTION SHALL BE SCHEDULED TO COMMENCE BETWEEN 8:00 A.M. AND NOON ON THE APPROPRIATE DAY ESTABLISHED BY CITY. WITH RESPECT TO TIE-IN CONNECTIONS AND CORING OPERATIONS, THE CITY RESERVES THE RIGHT TO REQUIRE CONNECTIONS TO BE PERFORMED DURING PERIODS OF LOW FLOW (MIDNIGHT TO 6:00 A.M.) IN ORDER TO MINIMIZE SERVICE DISRUPTION TO EXISTING CUSTOMERS. CONTRACTORS HAVING EXPERIENCE AND PROPER EQUIPMENT MAY BE GRANTED PERMISSION TO CORE MANHOLE BY PUBLIC UTILITIES DEPARTMENT.
14. NEW OR RELOCATED, UNDERGROUND MAINS SHALL BE LAID TO PROVIDE THE FOLLOWING MINIMUM HORIZONTAL SEPARATIONS (OUTSIDE TO OUTSIDE):

	WATER	STORM GRAVITY	STORM FORCE	RECLAIM	SANITARY GRAVITY	SANITARY FORCE
WATER		3'	3'	3'	6', PREFERRED 10'	6', PREFERRED 10'
STORM GRAVITY	3'		3'	3'	6', PREFERRED 10'	6', PREFERRED 10'
STORM FORCE	3'	3'		3'	6', PREFERRED 10'	6', PREFERRED 10'
RECLAIM	3'	3'	3'		6', PREFERRED 10'	6', PREFERRED 10'
SANITARY GRAVITY	6', PREFERRED 10'	6', PREFERRED 10'	6', PREFERRED 10'	6', PREFERRED 10'		6', PREFERRED 10'
SANITARY FORCE	6', PREFERRED 10'	6', PREFERRED 10'	6', PREFERRED 10'	6', PREFERRED 10'	6', PREFERRED 10'	

15. A 3' MINIMUM HORIZONTAL SEPARATION BETWEEN THE SANITARY GRAVITY AND WATER MAINS SHALL BE ALLOWED WHEN THE WATER MAIN IS INSTALLED IN A SEPARATE TRENCH OR ON AN UNDISTURBED EARTH SHELF AT LEAST 6" ABOVE THE SANITARY GRAVITY MAIN. ALTERNATIVELY, THE 3' MINIMUM HORIZONTAL SEPARATION SHALL BE ALLOWED WHEN THE SEWER MAIN IS ENCASED WITH CONCRETE OR ENCLOSED IN A WATER TIGHT CARRIER PIPE OR UPGRADED TO PRESSURE RATED PVC PIPE (MEETING AWWA C-900 OR C-905 SPECIFICATION AND PRESSURE TESTED AT 150 PSI TO ASSURE WATER TIGHTNESS PRIOR TO BACKFILLING).

STANDARD CONSTRUCTION DETAIL
SANITARY SEWER NOTES
(CONTINUED)
REV. 12/18
FILE NAME S1.DOC
DETAIL REF: S-1.1

16. NEW OR RELOCATED, UNDERGROUND MAINS SHALL BE LAID TO PROVIDE THE FOLLOWING MINIMUM CROSSING/VERTICAL SEPARATIONS (OUTSIDE TO OUTSIDE):

	WATER	STORM GRAVITY	STORM FORCE	RECLAIM	SANITARY GRAVITY	SANITARY FORCE
WATER		OVER STORM GRAVITY 6", PREFERRED 12"	OVER STORM FORCE 12"	OVER RECLAIM 12"	OVER SANITARY GRAVITY 6", PREFERRED 12"	OVER SANITARY FORCE 12"
		UNDER STORM GRAVITY 12"	UNDER STORM FORCE 12"	UNDER RECLAIM 12"	UNDER SANITARY GRAVITY 12"	UNDER SANITARY FORCE 12"
STORM GRAVITY	OVER WATER 12"		OVER STORM FORCE 6"	OVER RECLAIM 6", PREFERRED 12"	OVER SANITARY GRAVITY 6", PREFERRED 12"	OVER SANITARY FORCE 6", PREFERRED 12"
	UNDER WATER 6", PREFERRED 12"		UNDER STORM FORCE 6"	UNDER RECLAIM 12"	UNDER SANITARY GRAVITY 12"	UNDER SANITARY FORCE 12"
STORM FORCE	OVER WATER 12"	OVER STORM GRAVITY 6"		OVER RECLAIM 12"	OVER SANITARY GRAVITY 12"	OVER SANITARY FORCE 12"
	UNDER WATER 12"	UNDER STORM GRAVITY 6"		UNDER RECLAIM 12"	UNDER SANITARY GRAVITY 12"	UNDER SANITARY FORCE 12"
RECLAIM	OVER WATER 12"	OVER STORM GRAVITY 12"	OVER STORM FORCE 12"		OVER SANITARY GRAVITY 12"	OVER SANITARY FORCE 12"
	UNDER WATER 12"	UNDER STORM GRAVITY 6", PREFERRED 12"	UNDER STORM FORCE 12"		UNDER SANITARY GRAVITY 12"	UNDER SANITARY FORCE 12"
SANITARY GRAVITY	OVER WATER 12"	OVER STROM GRAVITY 12"	OVER STORM FORCE 12"	OVER RECLAIM 12"		OVER SANITARY FORCE 12"
	UNDER WATER 6", PREFERRED 12"	UNDER STORM GRAVITY 6", PREFERRED 12"	UNDER STORM FORCE 12"	UNDER RECLAIM 12"		UNDER SANITARY FORCE 12"
SANITARY FORCE	OVER WATER 12"	OVER STORM GRAVITY 12"	OVER STORM FORCE 12"	OVER RECLAIM 12"	OVER SANITARY GRAVITY 12"	
	UNDER WATER 12"	UNDER STORM GRAVITY 6", PREFERRED 12"	UNDER STORM FORCE 12"	UNDER RECLAIM 12"	UNDER SANITARY GRAVITY 12"	

STANDARD CONSTRUCTION DETAIL
SANITARY SEWER NOTES
(CONTINUED)
REV. 12/18
FILE NAME S1.DOC
DETAIL REF: S-1.2

17. SEWER LATERAL LOCATIONS SHALL BE MARKED ALONG THE OUTSIDE OF THE CURB WITH A SAW CUT "V", OR BY A METAL TAB SET INTO THE PAVEMENT.
18. THE CONTRACTOR SHALL INSTALL A METALLIZED FOIL LOCATOR TAPE, OR SIMILAR DEVICE AS MAY BE APPROVED BY THE CITY FOR THE FULL LENGTH OF ALL PVC SEWAGE FORCE MAINS. THIS PIPE LOCATOR AID SHALL BE INSTALLED BETWEEN 15" AND 24" BELOW FINISHED GRADE OR AS DIRECTED BY THE MANUFACTURER. TAPE SHALL BE COLOR CODED GREEN FOR SANITARY SEWER AND FORCE MAIN. A CONTINUOUS NO. 10 COPPER HEAD WIRE SHALL BE INSTALLED WITH WIRE BROUGHT UP AT ALL VALVES.

FORCE MAIN SANITARY SEWER:

1. PVC SANITARY SEWER FORCE MAINS, INCLUDING FITTINGS, SHALL BE GREEN PVC AWWA C-900, OR C-905, UNLESS SPECIFICALLY NOTED OTHERWISE. PRESSURE FITTINGS SHALL BE PRESSURE CLASS 150 OR C-907.
2. HDPE SANITARY SEWER FORCE MAINS SHALL BE SDR11 (OR THICKER) UNLESS SPECIFICALLY NOTED OTHERWISE. THE HDPE PIPE SHALL BE SIZED TO MATCH THE EXTERNAL DIAMETER OF THE PVC TO WHICH IT IS ATTACHED. PRESSURE FITTINGS SHALL BE PRESSURE CLASS 150 OR C-907.
3. ALL SANITARY SEWER FORCE MAINS SHALL USE A THRUST RESTRAINT JOINT METHOD IN COMPLIANCE WITH THE DUCTILE IRON PIPE RESEARCH ASSOCIATION GUIDELINES MODIFIED TO ACCOMMODATE PVC PIPE BY FOLLOWING THE RECOMMENDED INCREASE IN RESTRAINT LENGTH CORRESPONDING TO THE INSTALLATION OF POLYETHYLENE WRAP. IN NO INSTANCE SHALL THRUST BLOCKS BE PERMITTED.
4. ALL IN-LINE SANITARY SEWER FORCE MAIN VALVES SHALL BE AWWA C-509 OR C-515 COMPLIANT RESILIENT SEAT VALVES FEATURING AN EPOXY LINED DUCTILE IRON BODY.
5. FORCE MAIN SYSTEMS SHALL BE PRESSURE TESTED AT 100 PSI STATIC PRESSURE FOR A PERIOD OF 2 HOURS PER AWWA STANDARDS.
6. FORCE MAINS SHALL BE FLUSHED, PRESSURE TESTED, PIGGED AND CLEARED FOR SERVICE IN ACCORDANCE WITH THE LATEST AWWA STANDARDS AND THE FLORIDA DEPARTMENT OF ENVIRONMENTAL PROTECTION REQUIREMENTS. THE CONTRACTOR SHALL NOTIFY THE CITY'S DESIGNATED SITE INSPECTOR WHO SHALL COORDINATE WITH CITY PERSONNEL AT THE WATER OR WASTEWATER TREATMENT PLANT (AS APPROPRIATE) AT LEAST 48 HOURS PRIOR TO BEGINNING A FULL-DIAMETER FLUSH OF THE MAINS AND PRIOR TO THE COMMENCEMENT OF PRESSURE TESTING (SUBJECT TO AVAILABILITY).
7. THE CONTRACTOR SHALL BE REQUIRED TO PIG ALL FORCE MAINS AND PRIMARY TRANSMISSION MAINS LOCATED ON COLLECTOR AND ARTERIAL ROADWAYS. LAUNCHING AND EXTRACTION POINTS SHALL BE DETERMINED BY THE CONTRACTOR. ALL PIGGING OPERATIONS SHALL BE WITNESSED BY A PORT ORANGE REPRESENTATIVE.

GRAVITY SANITARY SEWER:

1. ALL GRAVITY SANITARY SEWER LINES IN PUBLIC RIGHTS-OF-WAY SHALL BE GREEN PVC SDR26, ASTM D-3034. SEWER LINES CONSTRUCTED OUTSIDE OF PUBLIC RIGHTS-OF-WAY, WITHIN SIDE YARDS, BACKYARDS, AND OTHER POORLY ACCESSIBLE AREAS SHALL BE CONSTRUCTED OF GREEN AWWA C-900 PVC SDR25. USE OF PLASTIC STYRENE FITTINGS SHALL NOT BE ALLOWED.
2. IN PLACES WHERE A MINIMUM COVER OF 36" CANNOT BE MAINTAINED, AWWA C-900 GREEN PVC SDR25 OR CONCRETE ENCASEMENT SHALL BE USED. WATER LINES, RECLAIMED LINES, AND STORM DRAINAGE CROSSINGS SHALL ALSO FOLLOW THE CONCRETE ENCASEMENT REQUIREMENT PER THESE STANDARDS AND AS PER REGULATORY REQUIREMENTS.
3. GRAVITY SANITARY SEWER PIPE SIZES SHALL BE:
   MAINS - 8" DIAMETER MINIMUM
   COMMERCIAL SERVICE LATERALS WITH MULTIPLE CONNECTIONS - 6" DIAMETER MINIMUM
   SINGLE FAMILY RESIDENTIAL SERVICE LATERALS - 4" DIAMETER
   MULTI-FAMILY RESIDENTIAL SERVICE LATERALS - 6" DIAMETER MINIMUM

STANDARD CONSTRUCTION DETAIL
SANITARY SEWER NOTES
(CONTINUED)
REV. 12/18
FILE NAME S1.DOC
DETAIL REF: S-1.3

4. SINGLE FAMILY RESIDENTIAL SERVICE LATERALS SHALL BE CONSTRUCTED AT EACH LOT OR UNIT AND LOCATED ON THE DOWNSTREAM SIDE OF THE LOT CENTER LINE. THESE SERVICES SHALL BE EXTENDED 48" ABOVE GROUND AT THE PROPERTY LINE WITH A PVC RISER AND PLUG BEING EASILY VISIBLE FROM THE ROAD. RUBBER SEAL FITTINGS SHALL BE USED ON ALL LINES. NO GLUED JOINTS ARE PERMITTED ON LATERALS.
5. GRAVITY SANITARY SEWER LINE CONSTRUCTION SHALL BE ACCOMPLISHED BY THE USE OF A LASER INSTRUMENT UNLESS ANOTHER METHOD IS PREVIOUSLY APPROVED BY THE CITY.
6. MINIMUM GRAVITY SANITARY SEWER SLOPES ARE AS FOLLOWS:
   8" PIPE - 0.40 %
   10" PIPE - 0.30 %
   12" PIPE - 0.22 %
7. GRAVITY SANITARY SEWER LINES SHALL BE INSTALLED WHENEVER POSSIBLE UNDER PAVED AREAS WITHIN PUBLIC RIGHTS-OF-WAY. UTILITY EASEMENTS SHALL BE PROVIDED WHENEVER PUBLICLY-OWNED SEWER LINES ARE CONSTRUCTED OUTSIDE OF A PUBLIC RIGHT-OF-WAY.
8. AS A GENERAL RULE, THE NUMBER OF JOINTS SHALL BE LIMITED WHENEVER POSSIBLE. IN SPECIAL CASES WHERE A POINT REPAIR TO AN 8" TO 12" PVC SEWER MAIN IS REQUIRED, THE PROPER RIGID WRAP AROUND SLEEVE SUCH AS A JCM-210 OVERSIZED DUCTILE IRON COUPLING OR AN APPROVED EQUAL MAY BE ALLOWED BY SPECIAL APPROVAL BY THE CITY.
9. SEWER MAINS SHALL BE FLUSHED, PRESSURE TESTED, PIGGED AND CLEARED FOR SERVICE IN ACCORDANCE WITH THE LATEST AWWA STANDARDS AND THE FLORIDA DEPARTMENT OF ENVIRONMENTAL PROTECTION REQUIREMENTS. THE CONTRACTOR SHALL NOTIFY THE CITY'S DESIGNATED SITE INSPECTOR WHO SHALL COORDINATE WITH CITY PERSONNEL AT THE WATER OR WASTEWATER TREATMENT PLANT (AS APPROPRIATE) AT LEAST 48 HOURS PRIOR TO BEGINNING A FULL-DIAMETER FLUSH OF THE MAINS AND PRIOR TO THE COMMENCEMENT OF PRESSURE TESTING (SUBJECT TO AVAILABILITY).
10. THE CONTRACTOR SHALL BE REQUIRED TO PIG ALL MAINS AND PRIMARY TRANSMISSION MAINS LOCATED ON COLLECTOR AND ARTERIAL ROADWAYS. LAUNCHING AND EXTRACTION POINTS SHALL BE DETERMINED BY THE CONTRACTOR. ALL PIGGING OPERATIONS SHALL BE WITNESSED BY A PORT ORANGE REPRESENTATIVE.

SANITARY MANHOLES:

1. STANDARD MANHOLES SHALL BE LOCATED AT INTERVALS NOT EXCEEDING 350'. SHOP DRAWINGS FOR ALL STRUCTURES SHALL BE SUBMITTED TO AND APPROVED BY THE DESIGN ENGINEER PRIOR TO INSTALLATION WITH TWO COPIES FORWARDED BY THE DESIGN ENGINEER TO THE CITY.
2. MAXIMUM DEPTH OF SANITARY MANHOLES SHALL BE 15'.
3. LOCAL COLLECTION SANITARY SEWER MANHOLES SHALL BE PRECAST WITH A MINIMUM INSIDE DIAMETER OF 48".
4. THICKER MANHOLE WALLS AND BASES MAY BE REQUIRED TO PREVENT FLOATATION BASED ON HIGH GROUND WATER TABLE ELEVATIONS AS DETERMINED USING ACCEPTED ENGINEERING PRACTICES AND/OR PUBLIC UTILITIES DEPARTMENT.
5. ALL SANITARY SEWER MANHOLES SHALL HAVE ALL INTERIOR SURFACES COATED WITH THREE (3) COATS OF WHITE/GRAY OVER RED OVER BLACK EW-1 EPOXY PAINT WITH A TOTAL OF 12 MILS THICKNESS OR BLACK COAL-TAR EPOXY WITH A TOTAL OF 16 MILS THICKNESS. OUTSIDE SURFACE TO BE COATED WITH TWO (2) COATS OF BLACK OVER BLACK EW-1 EPOXY PAINT WITH A TOTAL OF 8 MILS AND ONE (1) COAT OF BLACK COAL-TAR EPOXY WITH A TOTAL OF 8 MILS. ALL COATS SHALL BE APPLIED AT THE FACTORY EXCEPT MINOR FIELD TOUCH UP AT JOINTS AND AT MANHOLE NECK.
6. ALL MANHOLES CONSTRUCTED IN SIDE YARDS, BACKYARDS, AND EASEMENTS OUTSIDE OF THE RIGHT-OF-WAY SHALL BE OUTFITTED WITH FIBERGLASS OR EPOXY LINERS IN COMPLIANCE WITH ASTM-3753 OR OTHER TYPES OF LINERS APPROVED BY THE CITY. IN ADDITION, THE CITY MAY REQUIRE LINERS TO BE INSTALLED IN OTHER AREAS WHERE THE PUBLIC UTILITIES DEPARTMENT BELIEVES THE NEED IS JUSTIFIED SUCH AS IMMEDIATELY UPSTREAM OF FORCE MAINS CONNECTING TO GRAVITY MAINS.

STANDARD CONSTRUCTION DETAIL
SANITARY SEWER NOTES
(CONTINUED)
REV. 12/18
FILE NAME S1.DOC
DETAIL REF: S-1.4

7. MANHOLE RIMS SHALL MATCH FLUSH WITH THE FINISH GRADE ELEVATION IN PAVED AREAS AND A MINIMUM OF 0.2' AND MAXIMUM OF 0.5' ABOVE GRADE ELEVATION IN UNPAVED AREAS.
8. ALL SANITARY SEWER MANHOLE COVERS SHALL HAVE THE WORDS "PORT ORANGE FLORIDA SANITARY SEWER" CAST INTO THEM.
9. THE CONTRACTOR SHALL CONSTRUCT SANITARY SEWER MANHOLES IN SUCH A WAY THAT SEWER LINES DO NOT INTERSECT SEALED JOINTS BETWEEN SECTIONS OF THE MANHOLE.
10. NO BUG HOLES OR HONEYCOMB WILL BE ACCEPTED.
11. INDIVIDUAL SANITARY SERVICE ON NEW CONSTRUCTION SHALL NOT BE CONNECTED DIRECTLY INTO MANHOLES. THE SERVICE CONNECTION WILL BE BY USE OF WYE CONNECTIONS, UNLESS OTHERWISE APPROVED BY THE CITY.
12. RUBBER BOOTS WITH 316 STAINLESS STEEL BANDS SHALL BE UTILIZED IN THE CONNECTION OF THE SEWER MAIN TO THE MANHOLES. COMPLETELY COVER RUBBER BOOTS AT OUTSIDE CONNECTION AND SEAL INSIDE PROTRUSION WITH HYDRAULIC CEMENT.
13. EZ-WRAP PLASTIC, AS MANUFACTURED BY PRESS SEAL GASKET CORPORATION, SHALL BE USED ON THE OUTSIDE OF ALL MANHOLE AND WET WELL JOINTS. APPLY ONE LAYER OF 9" WRAP CENTERED ON EACH JOINT. A CITY INSPECTOR SHALL PERSONALLY INSPECT ALL JOINT SEALS PRIOR TO BACKFILLING OPERATIONS.

TESTING:

1. ALL TESTING REQUIRED BY THE CITY SHALL BE PAID FOR BY THE CONTRACTOR / DEVELOPER. THE CONTRACTOR SHALL EMPLOY AN INDEPENDENT TESTING LABORATORY AT HIS OWN EXPENSE.
2. TO ENSURE THAT COMPACTION OF ALL FILL MATERIAL IS COMPLETED PROPERLY, TESTS SHALL BE DONE 12" ABOVE THE PIPE AND THEN AT 12" VERTICAL INTERVALS UNTIL FINAL GRADE IS REACHED.
3. ALL TRENCHES SHALL BE BACKFILLED WITH ACCEPTABLE MATERIAL AND COMPACTED TO MINIMUM 95% IN UNPAVED AREAS AND 98% IN PAVED AREAS OF THE MAXIMUM DENSITY BASED ON AASHTO T-180 MODIFIED PROCTOR TEST.
4. TEST RESULTS SHALL BE SUBMITTED TO THE CITY AT A MINIMUM FREQUENCY OF ONE SET OF TESTS BETWEEN EACH MANHOLE AND ONE ADDITIONAL SET OF TESTS AT EVERY MANHOLE. IDENTIFICATION OF TEST LOCATIONS SHALL BE CLEARLY INDICATED ON TEST REPORTS. TEST RESULTS SHALL BE FORWARDED PROMPTLY TO THE CITY'S DESIGNATED SITE INSPECTOR.

CLOSE-OUT:

1. ALL SEWER MAINS, PRIOR TO FINAL ACCEPTANCE BY THE CITY AND PRIOR TO ANY FINAL PAVING OPERATIONS, SHALL BE TELEVISED AND SUBMITTED TO THE CITY USING A "PAN AND TILT CAMERA" WITH DEPTH GAUGE IN FRONT OF THE CAMERA BY A CITY APPROVED CONTRACTOR. THE CAMERA SHALL RUN FROM DOWN STREAM MANHOLE TO UP STREAM MANHOLE. CITY INSPECTOR SHALL BE NOTIFIED IN ADVANCE AND BE PRESENT DURING THE TELEVISING OF THE SEWER SYSTEM. THE VIDEO SHALL BE NON-STOP WITH AUDIO DESCRIBING WHAT IS BEING REVIEWED. WRITTEN VIDEO LOGS DESCRIBING THE CONDITION OF THE LINES SHALL ACCOMPANY THE VIDEO SUBMISSION TO THE CITY 48 HOURS PRIOR TO COMMENCING ANY INSTALLATION OF ASPHALT OR CONCRETE PAVEMENT. THE CITY MAY REQUIRE ADDITIONAL VIDEO TAPING, VIDEO TAPING OF LATERALS, AND/OR INFILTRATION/EXFILTRATION TESTS IF DEFECTS ARE APPARENT OR WORKMANSHIP IS QUESTIONABLE.
2. UPON CONSTRUCTION COMPLETION AND ACCEPTANCE OF THE SYSTEM, IT SHALL BE THE DESIGN ENGINEER'S RESPONSIBILITY TO ENSURE THAT THE SYSTEM IS PROPERLY CERTIFIED AND ACCEPTED BY THE FLORIDA DEPARTMENT OF ENVIRONMENTAL PROTECTION AND AS-BUILTS ARE PROVIDED TO THE CITY PRIOR TO ANY USE OF THE SYSTEM.

STANDARD CONSTRUCTION DETAIL
SANITARY SEWER NOTES
(CONTINUED)
REV. 12/18
FILE NAME S1.DOC
DETAIL REF: S-1.5

AIR RELEASE VALVES

MANUFACTURER	MODEL #
ARI	D-025P (Plastic)

GATE VALVES AND TAPPING VALVES – RESILIENT SEATED (AWWA C509 AND C515) 24" OR SMALLER

MANUFACTURER	SERIES OR MODEL #
American AVK Co.	3, 18, 25, 45, 55, & 66
Clow	2638 and 2639
Mueller	A-2360, A-2361, T-2360, T-2361
American Flow Control	2500

JOINTS RESTRAINED – PVC ONLY

MANUFACTURER	MODEL #
EBBA Iron Inc	Series 1500/1600/2000/2500/2800
Star Pipe	Stargrip Series 1000/1100/1200/4000
Sigma	One-Lock SLC, PV-Lok for PVC
Smith-Blair	Cam-Lock (111 & 120), Bell-Lock (115 & 165)

FORCE MAIN FITTINGS – PVC AND DIP CLASS 350 (WITH PROTECTO 401 CERAMIC EPOXY), C-900, C-905 OR C-907

MANUFACTURER	Harco, Multi-Fittings, Plastic Trends, Head, Tyler/Union

MANHOLE AND LIFT STATION WET WELL REHABILITATION LINER

MANUFACTURER	Raven 405, ½" minimum thick fiberglass liner (cylinder)

STANDARD CONSTRUCTION DETAIL
SANITARY SEWER AND FORCE MAIN
APPROVED PRODUCTS
REV. 12/18
FILE NAME S3.DOC
DETAIL REF: S-3

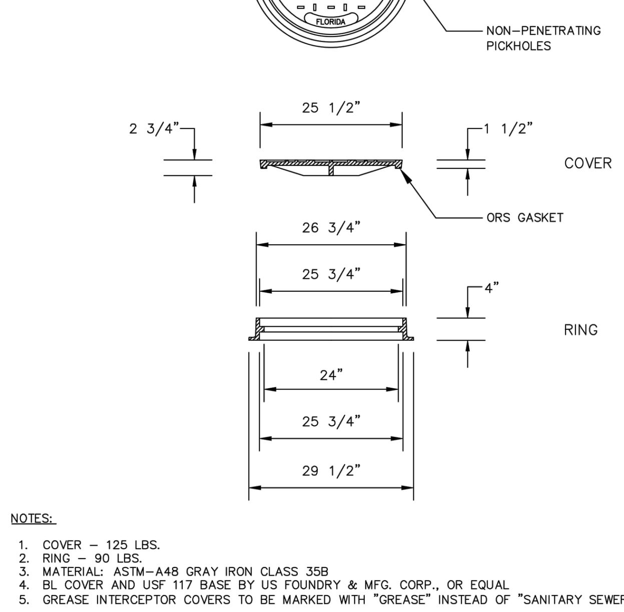

NOTES:

1. COVER – 125 LBS.
2. RING – 90 LBS.
3. MATERIAL: ASTM–A48 GRAY IRON CLASS 35B
4. BL COVER AND USF 117 BASE BY US FOUNDRY & MFG. CORP., OR EQUAL
5. GREASE INTERCEPTOR COVERS TO BE MARKED WITH "GREASE" INSTEAD OF "SANITARY SEWER"

STANDARD CONSTRUCTION DETAIL
SANITARY SEWER MANHOLE SINGLE COVER
REV. 12/18
FILE NAME: S4.DWG
DETAIL REF: S-4

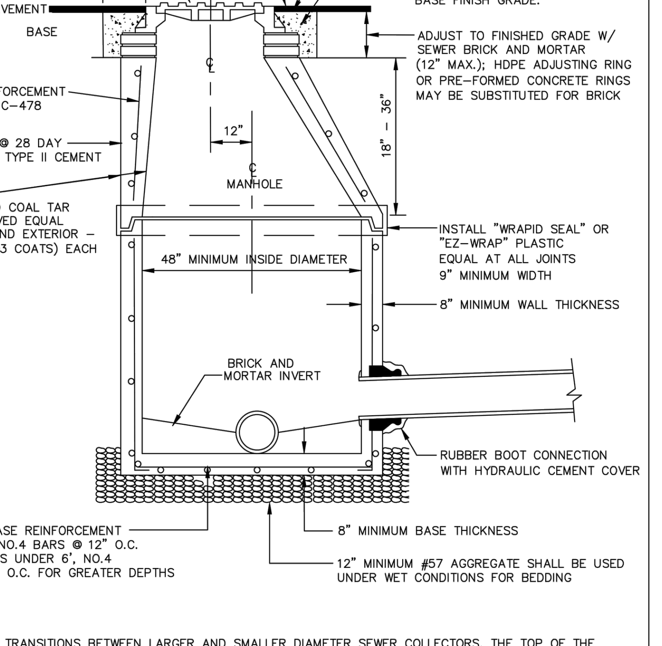

NOTES:

1. ON TRANSITIONS BETWEEN LARGER AND SMALLER DIAMETER SEWER COLLECTORS, THE TOP OF THE INSIDE OF THE TWO SEWER PIPES SHALL BE MATCHED.
2. NON–PENETRATING PICK–HOLES IN ALL CONCRETE SECTIONS.
3. USE FARBERTITE BITUMASTIC SEALER BETWEEN SECTIONS OF MANHOLES.
4. MAXIMUM DEPTH NOT TO EXCEED 15' MEASURED FROM MANHOLE TOP TO INSIDE BOTTOM.
5. 0.1' PIPE ELEVATION DROP ACROSS MANHOLE.

STANDARD CONSTRUCTION DETAIL
SANITARY SEWER STANDARD MANHOLE
REV. 12/18
FILE NAME: S6.DWG
DETAIL REF: S-6

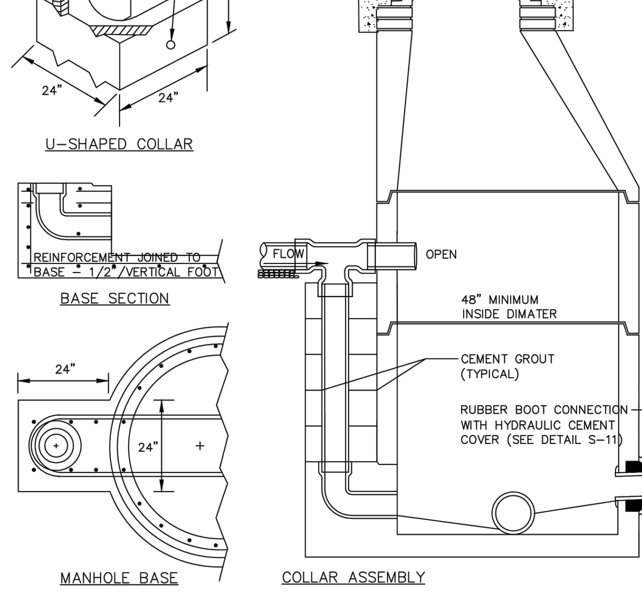

STANDARD CONSTRUCTION DETAIL
SANITARY SEWER OUTSIDE DROP MANHOLE
REV. 12/18
FILE NAME: S8.DWG
DETAIL REF: S-8

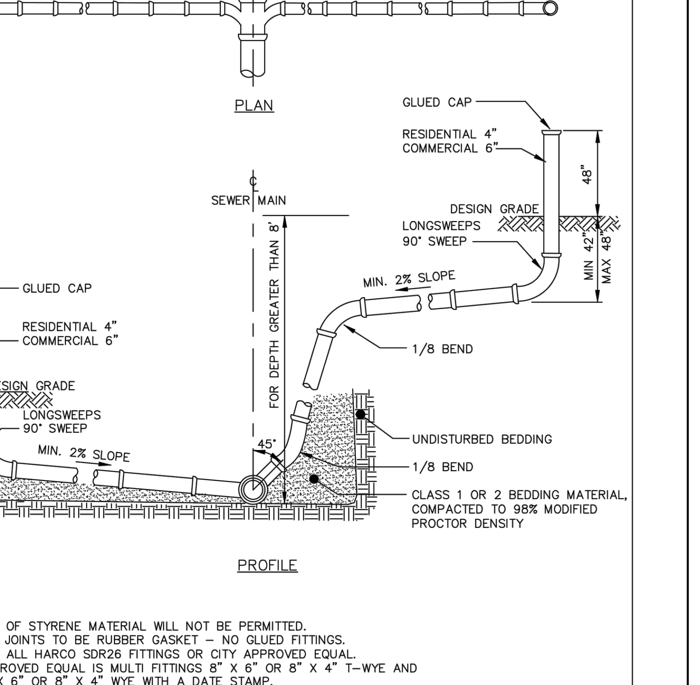

NOTES:

1. USE OF STYRENE MATERIAL WILL NOT BE PERMITTED.
2. ALL JOINTS TO BE RUBBER GASKET – NO GLUED FITTINGS.
3. USE ALL HARCO SDR26 FITTINGS OR CITY APPROVED EQUAL.
4. APPROVED EQUAL IS MULTI FITTINGS 8" X 6" OR 8" X 4" T–WYE AND 8" X 6" OR 8" X 4" WYE WITH A DATE STAMP.

STANDARD CONSTRUCTION DETAIL
SANITARY SEWER SERVICE LATERALS
REV. 12/18
FILE NAME: S11.DWG
DETAIL REF: S-11

ZEV COHEN & ASSOCIATES, INC.
300 INTERCHANGE BLVD., STE. C
ORMOND BEACH, FL 32174
WWW.ZEVCOHEN.COM

CIVIL ENGINEERING
LANDSCAPE ARCHITECTURE
ENVIRONMENTAL
PLANNING
TRANSPORTATION
(EB 4516) (LC 62)

NO.	DATE	BY	SUBMITTALS / REVISIONS
1	03-24-23	MT	REVISED PER CITY COMMENTS
2	04-24-23	MT	REVISED PER CITY AND DISTRICT COMMENTS
3	05-26-23	SA	REVISED PER CITY COMMENTS

COASTAL OAKS
FINAL ENGINEERING PLANS
CONSTRUCTION DETAILS

CITY OF PORT ORANGE
VOLUSIA COUNTY, FLORIDA

PROJECT NO: ZC 22119
DESIGNED BY: BB
DRAFTED BY: MT
CHECKED BY: BB
DRAWING FILE: 22119-DET

ROBERT J. BALL LICENSE No PE60001 STATE OF FLORIDA PROFESSIONAL ENGINEER

Digitally signed by Robert J Ball
DN: CN=Robert J Ball, dnQualifier=A01410D00000184CE569AA8000AC4E9, O=ZEV COHEN AND ASSOCIATES INC., C=US
Date: 2023.05.31 09:21:31-04'00'

ROBERT J. BALL, P.E., NO.60001
NOT VALID WITHOUT SEAL

SHEET: C12 OF 15

R:\22119 MCGRAY HERBERT STREET PROPERTY – P.O\FINAL ENGINEERING PLANS\CADDWGS\22119–DET.DWG – PRINTED 5/31/2023 9:03 AM

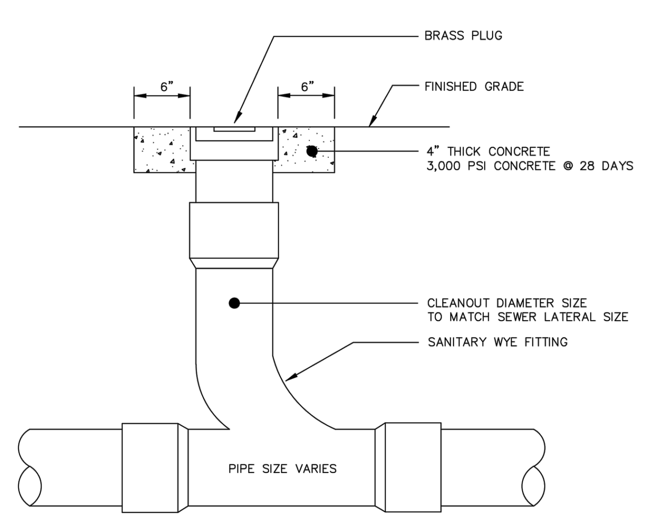

NOTE:

1. CLEANOUT SIZE SHOULD ALWAYS MATCH MAIN LINE SIZE TO ALLOW FOR PROPER CLEANING.

STANDARD CONSTRUCTION DETAIL
SANITARY SEWER SERVICE CLEANOUT
REV. 12/18
FILE NAME: S12.DWG
DETAIL REF: S-12

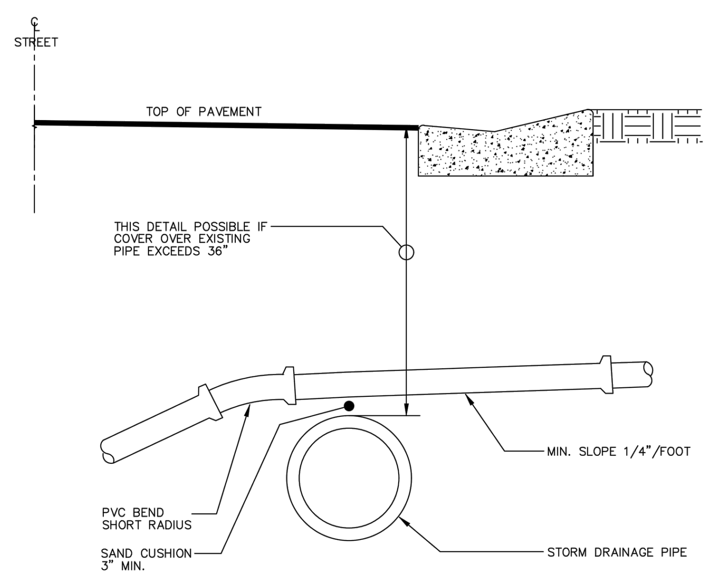

NOTES:

1. SANITARY SEWER PIPE MATERIAL SHALL BE PVC SDR26.

STANDARD CONSTRUCTION DETAIL
SANITARY SEWER LATERALS AND STORM CROSSING
REV. 12/18
FILE NAME: S13.DWG
DETAIL REF: S-13

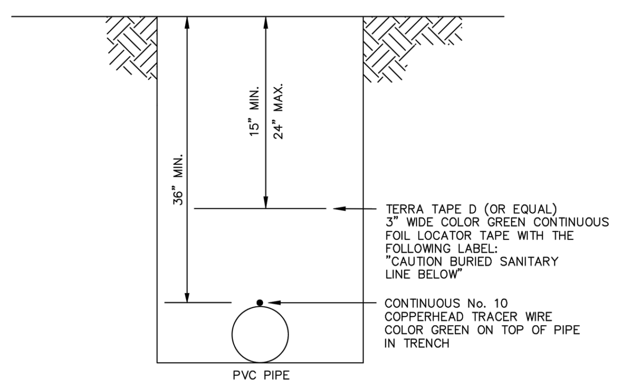

NOTE:

1. CONTINUOUS No. 10 COPPERHEAD TRACER WIRE TO BE INSTALLED WITH ALL PIPE. WIRE SHALL BE BROUGHT UP TO GRADE AT ALL VALVES.
2. ALL TRACER WIRES SHALL BE INTERCONNECTED WITH WATER-PROOF WIRE NUT CAP OR WITH SIMILAR WATER-PROOF SPLICE KIT AT ANY SPLICE AND WHERE SERVICES CONNECT TO MAINS.
3. A SUCCESSFUL CONTINUITY TEST SHALL BE CONDUCTED AND WITNESSED BY A CITY INSPECTOR AT THE COMPLETION OF TRACER WIRE INSTALLATION.

STANDARD CONSTRUCTION DETAIL
SANITARY SEWER LOCATOR TAPE/ TRACER WIRE INSTALLATION
REV. 12/18
FILE NAME: S14.DWG
DETAIL REF: S-14

ALL MATERIALS AND INSTALLATION METHODS USED FOR LAND DEVELOPMENT CODE REQUIRED IMPROVEMENTS FOR SUBDIVISIONS AND SITE PLANS SHALL BE IN CONFORMANCE WITH THE CITY, FDOT STANDARD SPECIFICATIONS FOR ROAD AND BRIDGE CONSTRUCTION (LATEST EDITION) AND THE FDOT ROADWAY AND TRAFFIC DESIGN STANDARDS (LATEST EDITION).

1. ALL STORM SEWERS AND CULVERTS LOCATED IN ROADWAY RIGHTS-OF-WAY AND ROADWAY EASEMENTS SHALL BE:
   A. CLASS III (MIN.) REINFORCED CONCRETE PIPE (RCP), IN ACCORDANCE WITH ASTM C76, C655, C506 AND C507. ALL RCP JOINTS SHALL BE ENTIRELY WRAPPED WITH FILTER FABRIC WITH A MINIMUM WIDTH OF 24" AND A MINIMUM OF 24" OVERLAP SECURED WITH PLASTIC OR STAINLESS BANDS. GASKETS ALONE ARE NOT PERMITTED AS AN EQUIVALENT SUBSTITUTE FOR MEETING THIS REQUIREMENT. ALL JOINTS SHALL BE RUBBER GASKETED FOR BOTH ROUND AND ELLIPTICAL PIPE.
   B. CORRUGATED, SMOOTH INTERIOR WALL, HIGH DENSITY POLYETHYLENE (HDPE), UP TO 60" DIAMETER, IN ACCORDANCE WITH ASTM F2306. ALL JOINTS WILL BE IN ACCORDANCE WITH MANUFACTURER'S SPECIFICATIONS.
   C. CORRUGATED, SMOOTH INTERIOR WALL, POLYPROPYLENE (PP), UP TO 60" DIAMETER, IN ACCORDANCE WITH ASTM F2881 ALL JOINTS WILL BE IN ACCORDANCE WITH MANUFACTURER'S SPECIFICATIONS.
   D. CORRUGATED, SMOOTH INTERIOR WALL, PVC, UP TO 36" DIAMETER, IN ACCORDANCE WITH ASTM F949 ALL JOINTS WILL BE IN ACCORDANCE WITH MANUFACTURER'S SPECIFICATIONS.
2. STORM SEWERS AND CULVERTS LOCATED OUTSIDE OF ROADWAY RIGHTS-OF-WAY AND ROADWAY EASEMENTS MAY BE MADE OF ALTERNATE MATERIALS, INCLUDING SDR26 TO SDR35 PVC IN ACCORDANCE WITH ASTM D-3034.
3. DEPTH OF COVER MEASURED TO THE TOP OF PIPE (NOT INCLUDING THE BELL JOINT) SHALL BE A MINIMUM OF 12". DEVIATION FROM THIS REQUIREMENT MAY BE ALLOWED BY INCREASING THE PIPE'S STRUCTURAL CAPACITY. THIS DEVIATION MUST BE SPECIFIED ON THE PLANS APPROVED FOR CONSTRUCTION AND SUBSEQUENTLY REFLECTED ON THE SHOP DRAWINGS AND AS-BUILT PLANS.
4. ALL STORM DRAINAGE PIPES LOCATED IN ROADWAY RIGHTS-OF-WAY AND ROADWAY EASEMENTS SHALL BE A MINIMUM OF 15" DIAMETER OR EQUIVALENT AND BE DESIGNED FOR A MINIMUM OF A 25 YEAR - 24 HOUR STORM. STORM DRAINAGE PIPES SMALLER THAN 15" ARE PERMITTED ON PRIVATE SITE PLANS PROVIDED MAINTENANCE IS PERFORMED BY THE OWNER.
5. STORM INLETS, MANHOLES, AND CATCH BASINS SHALL BE EITHER POURED IN PLACE OR PRECAST REINFORCED CONCRETE. STRUCTURES SHALL BE REQUIRED AT EACH CHANGE OF PIPE SIZE OR CHANGE IN PIPE DIRECTION. ALL STRUCTURES SHALL BE IN COMPLIANCE WITH FDOT DRAINAGE INDEX 200. CAST IN PLACE STRUCTURES SHALL HAVE 8" THICK WALLS AND PRECAST STRUCTURES SHALL HAVE 6" THICK WALLS. THESE DIMENSIONS MUST BE REFLECTED ON BOTH SHOP AND AS-BUILT DRAWINGS.
6. CULVERTS SHALL BE SLOPED TO MAINTAIN A MINIMUM SELF-CLEANING VELOCITY OF 3' PER SECOND USING MANNING'S "n" CORRESPONDING TO THE PIPE MATERIAL.
7. FOR SITE PLANS, STORM INLET SPACING SHALL BE DESIGNED TO ACCEPT 100% OF THE RUNOFF FROM A RAINFALL INTENSITY OF 4" PER HOUR WITHOUT RESULTING IN PONDING OF WATER AROUND THE INLET.
8. FOR SUBDIVISION PLANS, STORM INLET SPACING, WITH PIPING 15" IN DIAMETER OR LARGER, SHALL BE DESIGNED WITH THE MAXIMUM DISTANCE OF 300' BETWEEN INLETS AND/OR CLEAN-OUT JUNCTION BOXES. FOR ROADWAY SECTIONS HAVING CURB AND GUTTER AND DESIGN SPEEDS OF 45 MPH AND LESS, SPREAD RESULTING FROM A RAINFALL INTENSITY OF 4" PER HOUR SHALL NOT EXCEED ONE-HALF OF THE TRAVEL LANE ADJACENT TO THE GUTTER.
9. RETENTION AREA WATER DEPTHS SHALL BE 4' MINIMUM TO 12' MAXIMUM, MEASURED FROM THE NORMAL WATER LEVEL.

STANDARD CONSTRUCTION DETAIL
STORM DRAINAGE DESIGN
AND CONSTRUCTION NOTES
REV. 12/18
FILE NAME ST1.DOC
DETAIL REF: ST-1

10. THE MAXIMUM PERMISSIBLE SLOPE OF ANY NEW POND BANKS IS 4:1 (HORIZONTAL:VERTICAL). THIS LIMIT SHALL BE APPLIED TO ALL AREAS EXCEPT BELOW THE WATER TABLE WHERE SHARPER SLOPES ARE PERMISSIBLE.
11. PIPED STORMWATER SYSTEMS SHALL HAVE A MINIMUM DRAINAGE MAINTENANCE EASEMENT WIDTH OF 20', CENTERED OVER PIPE/STRUCTURE, AND SHALL BE INCREASED DEPENDING UPON CONDITIONS, SUCH AS OSHA UNSHIELDED TRENCH COMPLIANCE.
12. NORMAL ROADSIDE SWALES ARE PERMITTED TO BE CONSTRUCTED TO A MAXIMUM DEPTH OF 18" BELOW THE OUTSIDE EDGE OF PAVEMENT OR CONCRETE CURB.
13. CONCRETE EROSION CONTROL MUST BE PROVIDED WHERE SWALES OR CULVERTS INTERCEPT DRAINAGE DITCHES.
14. IN GENERAL, ALL RETENTION / DETENTION SITES MUST BE CONSTRUCTED ON ALL PROJECTS PRIOR TO ANY ROAD, PARKING LOT, OR BUILDING CONSTRUCTION COMMENCING OR AS CURRENT PERMIT CONDITIONS DICTATE. SEWER AND WATER MAINS MAY BE INSTALLED PRIOR TO RETENTION/DETENTION SITE ONSTRUCTION IF DEWATERING IS NOT REQUIRED.
15. POND INFLOW AND OUTLET STRUCTURES SHALL GENERALLY BE CONSTRUCTED WITH REINFORCED CONCRETE.
16. SKIMMERS FOR WET PONDS SHALL BE CONSTRUCTED SUCH THAT THE BOTTOM EXTENDS 6" BELOW THE NORMAL WATER LEVEL AND 6" ABOVE THE OVERFLOW. FOR DRY PONDS, THE SKIMMER BOTTOM SHALL BE SET 6" BELOW THE LOWEST OVERFLOW ELEVATION AND 6" ABOVE THE HIGHEST POINT OF OVERFLOW. ALL SKIMMERS SHALL BE CONSTRUCTED OF MINIMUM 1/4" THICK ALUMINUM OR FIBERGLASS AND ADEQUATELY SUPPORTED TO PREVENT DEFLECTION.
17. DEVELOPMENT PLANS FOR ALL STORMWATER MANAGEMENT SYSTEMS SHALL CONTAIN POP-OFF DATA (OVERFLOW), BOTTOM ELEVATION, NORMAL WATER LEVELS, MEAN ANNUAL SEASONAL HIGH WATER TABLE ELEVATION, TREATMENT VOLUME AND CORRESPONDING ELEVATION, 100 YEAR HIGH WATER LEVELS, AND THE DESIGN TAILWATER ELEVATION (IF APPLICABLE).
18. WHEN CULVERTS ARE INSTALLED TO MAINTAIN THE FLOW OF EXISTING DRAINAGE WAYS WHERE NEWLY PROPOSED ROADS WOULD OTHERWISE SEVER THE DRAINAGE WAY THEN CULVERTS CROSSING RIGHTS-OF-WAY SHALL EXTEND FROM RIGHT-OF-WAY LINE TO RIGHT-OF-WAY LINE UNDER THE ROADWAY. CULVERTS SHALL BE DESIGNED TO ACCOMMODATE THE FLOW FROM THE 100 YEAR-24 HOUR STORM EVENT WITHOUT FLOODING ADJACENT PROPERTY OR SURCHARGING THE SAID ROADWAY.
19. THE CITY MAY REQUEST THAT THE DEVELOPER SUBMIT A REPORT BY A QUALIFIED HYDROLOGIST ON THE IMPACT THE POND WILL HAVE ON NEIGHBORING WATER TABLE ELEVATIONS BOTH DURING CONSTRUCTION AND AFTER POND COMPLETION. THE CITY MAY REQUIRE GROUNDWATER MONITORING DURING THE POND EXCAVATION.
20. SOIL EROSION CONTROL MEASURES, SATISFACTORY TO THE ST. JOHNS RIVER WATER MANAGEMENT DISTRICT AND THE CITY, SHALL BE EMPLOYED DURING CONSTRUCTION.
21. A 10' MAINTENANCE EASEMENTS/RIGHTS-OF-WAY SHALL BE PROVIDED AROUND THE ENTIRE PERIMETER OF ALL PONDS AND ASSOCIATED OUTFALLS DISCHARGING INTO AND OUT OF LAKES. APPLICABLE CROSS SECTIONS SHALL BE INCLUDED ON FINAL DEVELOPMENT PLANS.
22. THE CONTRACTOR SHALL BE RESPONSIBLE TO OBTAIN ANY AND ALL DEWATERING PERMITS THAT MAY BE REQUIRED.
23. IT SHALL BE THE RESPONSIBILITY OF THE CONTRACTOR TO REVIEW AND MAINTAIN A COPY OF THE SJRWMD AND NPDES PERMITS AT THE CONSTRUCTION SITE AND ABIDE BY ALL CONDITIONS OF THE PERMIT.
24. LANDSCAPE PLANS SHALL CLEARLY DEPICT THE DESIGN LOCATION OF PLANTINGS RELATIVE TO THE LOCATION OF PUBLIC UTILITIES AND STORMWATER INFRASTRUCTURE IN ORDER TO EVALUATE POTENTIAL CONFLICTS.

STANDARD CONSTRUCTION DETAIL
STORM DRAINAGE DESIGN
AND CONSTRUCTION NOTES
(CONTINUED)
REV. 12/18
FILE NAME ST1.DOC
DETAIL REF: ST-1.1

25. NEW OR RELOCATED, UNDERGROUND MAINS SHALL BE LAID TO PROVIDE THE FOLLOWING MINIMUM CROSSING/VERTICAL SEPARATIONS (OUTSIDE TO OUTSIDE):

	WATER	STORM GRAVITY	STORM FORCE	RECLAIM	SANITARY GRAVITY	SANITARY FORCE
WATER		OVER STORM GRAVITY 6", PREFERRED 12" UNDER STORM GRAVITY 12"	OVER STORM FORCE 12" UNDER STORM FORCE 12"	OVER RECLAIM 12" UNDER RECLAIM 12"	OVER SANITARY GRAVITY 6", PREFERRED 12" UNDER SANITARY GRAVITY 12"	OVER SANITARY FORCE 12" UNDER SANITARY FORCE 12"
STORM GRAVITY	OVER WATER 12" UNDER WATER 6", PREFERRED 12"		OVER STORM FORCE 6" UNDER STORM FORCE 6"	OVER RECLAIM 6", PREFERRED 12" UNDER RECLAIM 12"	OVER SANITARY GRAVITY 6", PREFERRED 12" UNDER SANITARY GRAVITY 12"	OVER SANITARY FORCE 6", PREFERRED 12" UNDER SANITARY FORCE 12"
STORM FORCE	OVER WATER 12" UNDER WATER 12"	OVER STORM GRAVITY 6" UNDER STORM GRAVITY 6"		OVER RECLAIM 12" UNDER RECLAIM 12"	OVER SANITARY GRAVITY 12" UNDER SANITARY GRAVITY 12"	OVER SANITARY FORCE 12" UNDER SANITARY FORCE 12"
RECLAIM	OVER WATER 12" UNDER WATER 12"	OVER STORM GRAVITY 12" UNDER STORM GRAVITY 6", PREFERRED 12"	OVER STORM FORCE 12" UNDER STORM FORCE 12"		OVER SANITARY GRAVITY 12" UNDER SANITARY GRAVITY 12"	OVER SANITARY FORCE 12" UNDER SANITARY FORCE 12"
SANITARY GRAVITY	OVER WATER 12" UNDER WATER 6", PREFERRED 12"	OVER STROM GRAVITY 12" UNDER STORM GRAVITY 6", PREFERRED 12"	OVER STORM FORCE 12" UNDER STORM FORCE 12"	OVER RECLAIM 12" UNDER RECLAIM 12"		OVER SANITARY FORCE 12" UNDER SANITARY FORCE 12"
SANITARY FORCE	OVER WATER 12" UNDER WATER 12"	OVER STORM GRAVITY 12" UNDER STORM GRAVITY 6", PREFERRED 12"	OVER STORM FORCE 12" UNDER STORM FORCE 12"	OVER RECLAIM 12" UNDER RECLAIM 12"	OVER SANITARY GRAVITY 12" UNDER SANITARY GRAVITY 12"	

STANDARD CONSTRUCTION DETAIL
STORM DRAINAGE DESIGN
AND CONSTRUCTION NOTES
(CONTINUED)
REV. 12/18
FILE NAME ST1.DOC
DETAIL REF: ST-1.2

26. NEW OR RELOCATED, UNDERGROUND MAINS SHALL BE LAID TO PROVIDE THE FOLLOWING MINIMUM HORIZONTAL SEPARATIONS (OUTSIDE TO OUTSIDE):

	WATER	STORM GRAVITY	STORM FORCE	RECLAIM	SANITARY GRAVITY	SANITARY FORCE
WATER		3'	3'	3'	6', PREFERRED 10'	6', PREFERRED 10'
STORM GRAVITY	3'		3'	3'	6', PREFERRED 10'	6', PREFERRED 10'
STORM FORCE	3'	3'		3'	6', PREFERRED 10'	6', PREFERRED 10'
RECLAIM	3'	3'	3'		6', PREFERRED 10'	6', PREFERRED 10'
SANITARY GRAVITY	6', PREFERRED 10'	6', PREFERRED 10'	6', PREFERRED 10'	6', PREFERRED 10'		6', PREFERRED 10'
SANITARY FORCE	6', PREFERRED 10'	6', PREFERRED 10'	6', PREFERRED 10'	6', PREFERRED 10'	6', PREFERRED 10'	

STANDARD CONSTRUCTION DETAIL
STORM DRAINAGE DESIGN
AND CONSTRUCTION NOTES
(CONTINUED)
REV. 12/18
FILE NAME ST1.DOC
DETAIL REF: ST-1.3

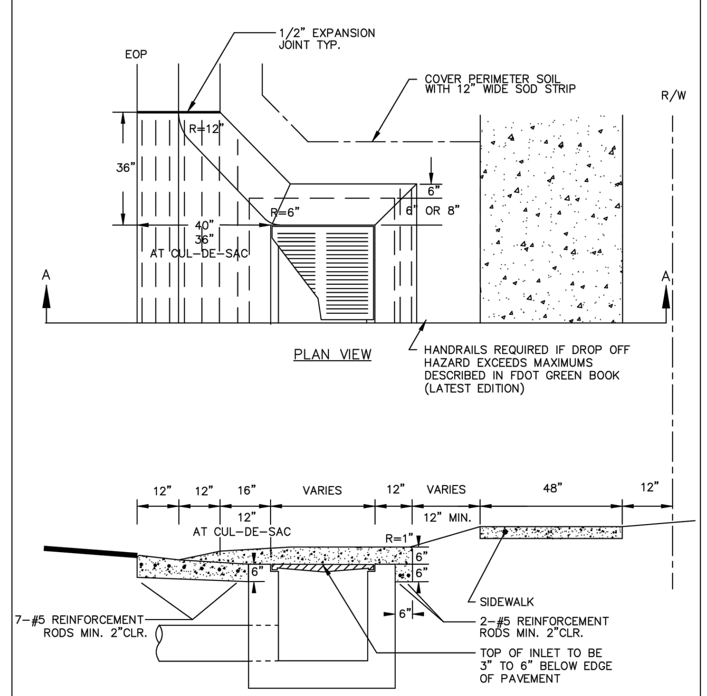

STANDARD CONSTRUCTION DETAIL
STORM INLET APRON
REV. 12/18
FILE NAME: ST3.DWG
DETAIL REF: ST-3

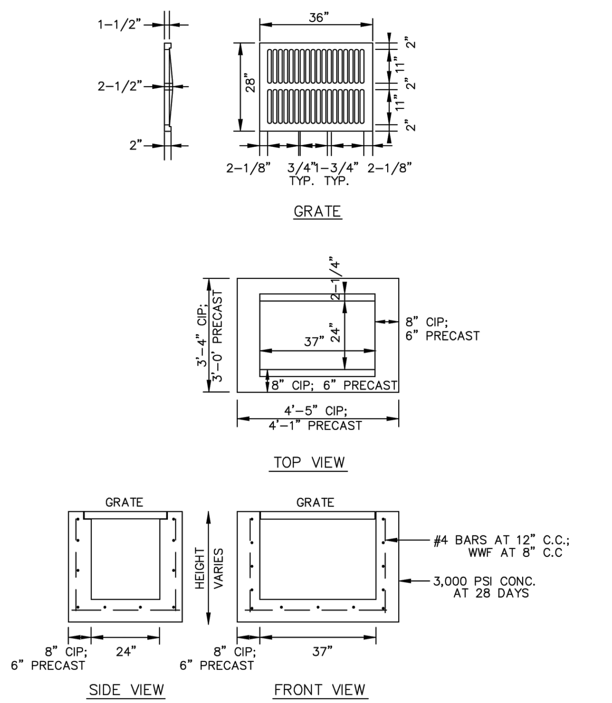

NOTE:

1. 8" WALL THICKNESS FOR CAST IN PLACE STRUCTURES. 6" WALL THICKNESS FOR PRECAST STRUCTURES.
2. MAXIMUM PIPE DIAMETER 18" ALONG 24" WALL.
3. MAXIMUM PIPE DIAMETER 24" ALONG 37" WALL.
4. SEE FDOT INDEX 232 FOR ADDITIONAL DETAIL.

STANDARD CONSTRUCTION DETAIL
TYPE "C" STORM INLET
REV. 12/18
FILE NAME: ST4.DWG
DETAIL REF: ST-4

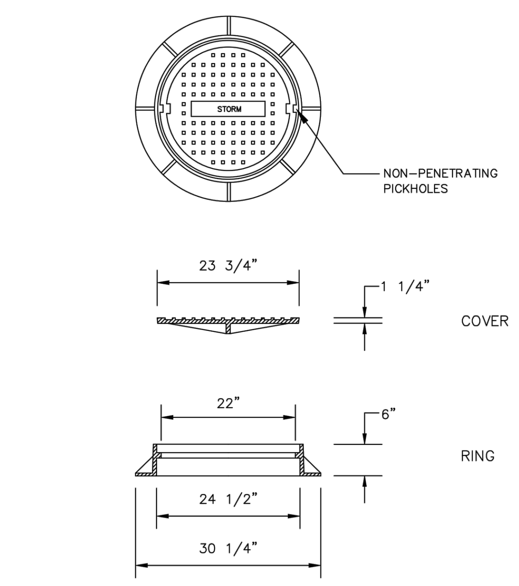

NOTES:

1. COVER – 130 LBS.
2. RING – 150 LBS.
3. MATERIAL: ASTM-A48 GRAY IRON CLASS 35B
4. USF 170 RING AND "E" COVER BY US FOUNDRY & MFG. CORP., OR EQUAL

STANDARD CONSTRUCTION DETAIL
STORM SEWER MANHOLE COVER
REV. 12/18
FILE NAME: ST6.DWG
DETAIL REF: ST-6

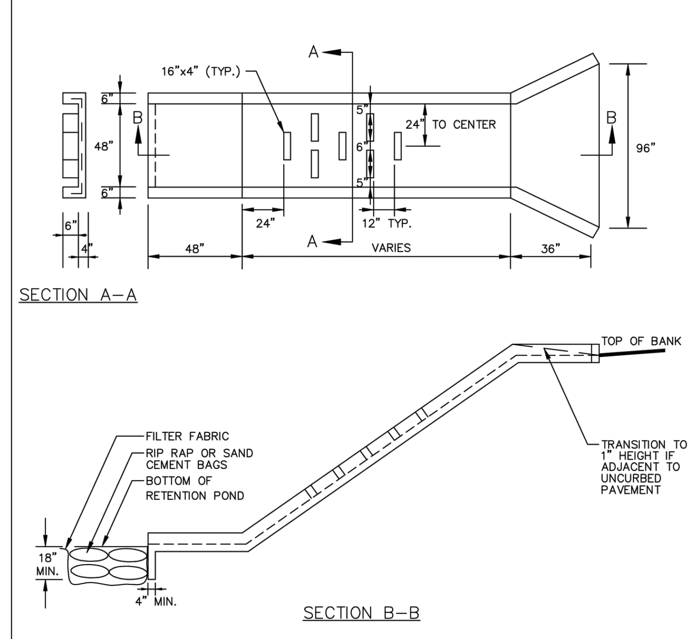

NOTES:

1. SPILLWAY TO BE CONCRETE, 2,500 PSI AT 28 DAY, 4" THICK FIBERCRETE.
2. PLACE SOD AT LEAST 5' AROUND ALL STRUCTURE EDGES ABOVE STANDING WATER.

STANDARD CONSTRUCTION DETAIL
CONCRETE SPILLWAY
REV. 12/18
FILE NAME: ST7.DWG
DETAIL REF: ST-7

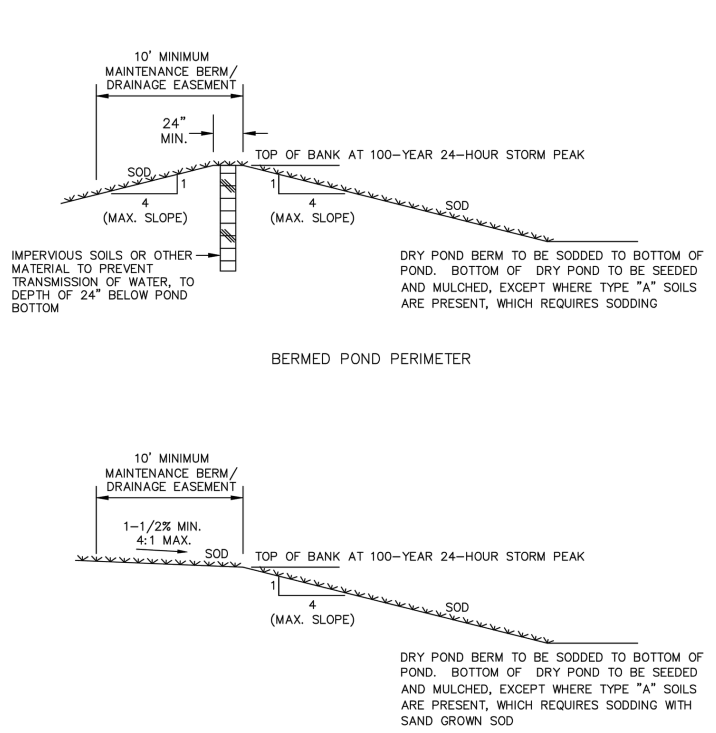

STANDARD CONSTRUCTION DETAIL
DRY POND
REV. 12/18
FILE NAME: ST8.DWG
DETAIL REF: ST-8

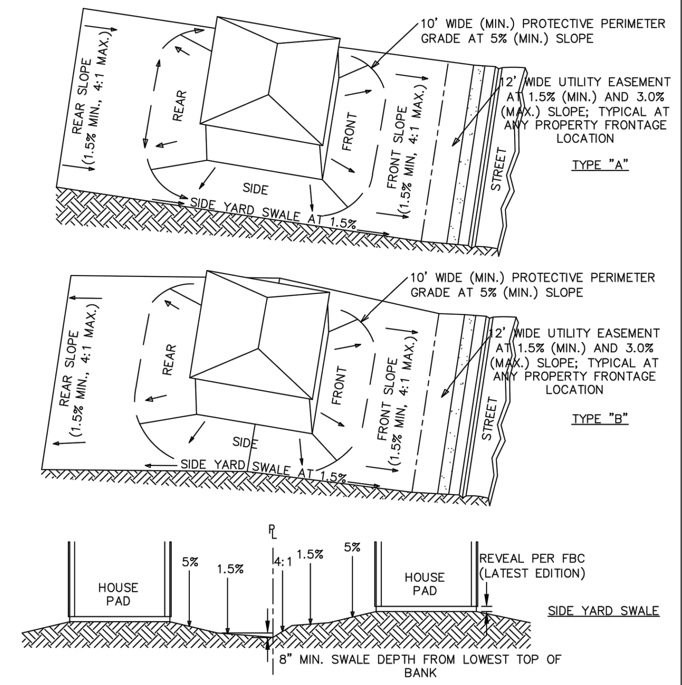

NOTE:

1. ALL FINISHED FLOOR ELEVATIONS SHALL BE SET A MINIMUM OF 12" ABOVE THE 100 YEAR FLOOD PLAIN AND/OR 12" ABOVE THE 100 YEAR DESIGN HIGH WATER LEVEL OF THE ADJACENT DETENTION/ RETENTION AREA.
2. TYPE "C" LOT GRADING REQUIRES FLORIDA PROFESSIONAL ENGINEER'S DESIGN AND APPROVAL BY CITY.
3. SIDE YARD SWALE LONGITUDINAL GRADE MAY BE REDUCED TO 1.0% FROM 1.5% WHERE WELL DRAINED SOILS ARE PRESENT AND APPROVED BY CITY.
4. SIDE YARD SWALE SHALL BE CENTERED ON THE COMMON PROPERTY LINES FOR NEW CONSTRUCTION AND INSTALLED COMPLETELY WITHIN PARCEL LIMITS OF INFILL PROPERTIES.
5. ALL SLOPES SHALL NOT EXCEED 4:1 RATIO.

STANDARD CONSTRUCTION DETAIL
RESIDENTIAL LOT GRADING
REV. 12/18
FILE NAME: ST10.DWG
DETAIL REF: ST-10

MATERIALS

THE INSPECTION AND TESTING OF MATERIALS AND FINISHED ARTICLES TO BE INCORPORATED IN THE WORK SHALL BE MADE BY BUREAUS, LABORATORIES, OR AGENCIES APPROVED BY THE ENGINEER OF RECORD. THE CONTRACTOR SHALL SUBMIT SUCH SAMPLES, OR SUCH SPECIAL OR TEST PIECES OF MATERIALS AS THE ENGINEER OF RECORD MAY REQUIRE. THE CONTRACTOR SHALL NOT INCORPORATE ANY MATERIAL OR FINISHED ARTICLE INTO THE WORK UNTIL THE RESULTS OF THE INSPECTION OR TESTS ARE KNOWN AND THE CONTRACTOR HAS BEEN NOTIFIED BY THE ENGINEER OF RECORD THAT THE MATERIAL OR FINISHED ARTICLE IS ACCEPTED. ALL MATERIALS MUST BE OF THE SPECIFIED QUALITY AND BE EQUAL TO THE APPROVED SAMPLE IF A SAMPLE HAS BEEN SUBMITTED. CERTIFIED COPIES OF ALL TESTS MADE SHALL BE SUBMITTED TO THE ENGINEER OF RECORD AS WELL AS TO THE CITY'S DESIGNATED SITE INSPECTOR. THE CITY'S DESIGNATED SITE INSPECTOR MUST RECEIVE COPIES OF ALL TESTING REPORTS AND CERTIFICATES PRIOR TO THE ENGINEER OF RECORD REQUESTING A FINAL PROJECT INSPECTION FROM THE CITY.

LABORATORY CONTROL AND CERTIFICATES

1. SPECIFICATIONS: SAMPLING, TESTING, AND LABORATORY METHODS SHALL BE IN ACCORDANCE WITH THE STANDARD SPECIFICATIONS OF THE AASHTO OR ASTM. WHERE AASHTO OR ASTM SPECIFICATIONS ARE USED, THE REFERENCE SHALL BE CONSTRUED TO BE THE MOST RECENT STANDARD SPECIFICATIONS OF THE AASHTO OR ASTM IN FORCE ON THE DATE OF THE TEST.
2. TEST & CERTIFICATES: THE CONTRACTOR SHALL ENGAGE AN APPROVED TESTING LABORATORY TO PROVIDE THE FOLLOWING TESTS AND CERTIFICATIONS SIGNED BY A REGISTERED ENGINEER OF THE STATE OF FLORIDA. ALL TECHNICIANS PERFORMING THE TESTS SHALL BE STATE CERTIFIED FOR THE TESTING PERFORMED. ADDITIONAL TESTS THAT MAY BE REQUIRED BY EITHER THE ENGINEER OF RECORD OR THE CITY SHALL ALSO BE PROVIDED BY THE CONTRACTOR AND THE FOLLOWING SHALL NOT BE TAKEN AS A COMPLETE AND EXHAUSTIVE LIST OF THE CONTRACTOR'S TESTING RESPONSIBILITIES.
   A) SOIL ANALYSIS FOR STRUCTURAL FILL MATERIAL PRIOR TO INSTALLATION.
   B) PROCTOR DENSITIES, MOISTURE CONTENT, COMPACTED FIELD DENSITIES, AND ATTERBERG LIMITS.
   C) FLOWABLE FILL – MIX DESIGNS, CONSTRUCTION SUPERVISION AND COMPRESSIVE STRENGTH TESTS.
   D) ANALYSIS OF RECYCLED CONCRETE BASE MATERIAL PRIOR TO INSTALLATION.
   E) ASPHALT MIX DESIGN, BITUMEN CONTENT, SIEVE ANALYSIS, HUBBARD FIELD STABILITY TESTS, NUCLEAR DENSITY TESTS (BACKSCATTER METHOD), AND ANALYSIS OF CORE SAMPLES.
   F) CONCRETE MIX DESIGNS FOR ALL APPLICATIONS INCLUDING PAVEMENT, CAST-IN-PLACE STRUCTURES, CURBING, GUTTERS, SIDEWALKS, BIKE PATHS, APRONS AND DRIVEWAYS.
   G) COMPRESSIVE TEST CYLINDERS AND SLUMP TESTS FOR ALL APPLICATIONS OF CONCRETE, INCLUDING PAVEMENT, CAST-IN-PLACE STRUCTURES, CURBING, GUTTERS, SIDEWALKS, BIKE PATHS, APRONS, AND DRIVEWAYS.
   H) CHLORINE RESIDUAL AND BACTERIOLOGICAL TESTING OF WATER MAINS.
   I) PRESSURIZED LEAK TESTING OF WATER MAINS, FORCE MAINS, AND RECLAIMED WATER MAINS.

STANDARD CONSTRUCTION DETAIL
TECHNICAL SPECIFICATIONS
FOR SITES AND SUBDIVISIONS
TESTING
REV. 12/18
FILE NAME: M2.DWG
DETAIL REF: M-2

SCOPE OF WORK

FURNISH AND INSTALL SOD, OR SEED AND MULCH, THE LIMITS CALLED FOR ON THE CONSTRUCTION DRAWINGS. AT A MINIMUM, ALL WORK SHALL MEET THE MINIMUM STANDARDS OF SECTION 570 OF FDOT STANDARD SPECIFICATIONS FOR ROAD AND BRIDGE CONSTRUCTION, LATEST EDITION, AND MINIMUM REQUIREMENTS OF THE CITY, AS OUTLINED BELOW.

SEED

SEED SHALL BE PRE-MIXED BY A SEED COMPANY TO THE PERCENTAGES DESCRIBED BELOW, WITH CERTIFICATION FROM THE SUPPLIER PROVIDED TO THE CITY'S DESIGNATED LANDSCAPE INSPECTOR PRIOR TO USE. THE GRASS SEED MIXTURE SHALL BE:

PENSACOLA BAHIA (USE 50% SCARIFIED SEED)	50%
HULLED BERMUDA	25%
BROWN TOP MILLET	25%

NOTE: IN THE FALL AND WINTER MONTHS, AND WITH THE APPROVAL OF THE CITY, ANNUAL RYE GRASS SHALL BE SUBSTITUTED IN EQUAL AMOUNTS FOR THE BROWN TOP MILLET.

MULCH

STRAW OR HAY CONSISTING OF OATS, RYE, OR WHEAT STRAW, OR OF PANGOLA, PEANUT, COASTAL BERMUDA OR BAHIA GRASS HAY. MULCH SHALL BE FREE FROM WEED AND OTHER UNDESIRABLE GRASS. APPROXIMATELY ONE INCH (1"), LOOSE THICKNESS, OF MULCH MATERIAL SHALL BE APPLIED UNIFORMLY OVER THE SEEDED AREAS (APPROXIMATELY ONE AND ONE-HALF (1-1/2) BALES PER 1000 SQUARE FEET). THE MULCH MATERIAL SHALL BE CUT INTO THE SOIL WITH A DISC HARROW OR OTHERWISE ANCHORED DOWN. UNDER PROPER CIRCUMSTANCES, CONTRACTOR MAY REQUEST OPTION TO INSTALL HYDRO-SEEDING, SUBJECT TO THE APPROVAL OF THE PROJECT LANDSCAPE ARCHITECT AND THE CITY.

METHOD

GRASSING SHALL BE DONE IMMEDIATELY UPON COMPLETION OF THE FINE GRADING OPERATION. HOWEVER, NO SEEDING SHALL BE DONE WHEN THE GROUND IS FROZEN OR UNDULY WET. THE RATE OF SPREAD FOR THE SEED MATERIAL SHALL BE ONE HUNDRED AND THIRTY (130) POUNDS PER ACRE.

STANDARD CONSTRUCTION DETAIL
SODDING, SEEDING AND MULCHING
NOTES
REV. 12/18
FILE NAME: M4.DWG
DETAIL REF: M-4

ZEV COHEN
& ASSOCIATES, INC.
300 INTERCHANGE BLVD., STE. C
ORMOND BEACH, FL 32174
WWW.ZEVCOHEN.COM

CIVIL ENGINEERING
LANDSCAPE ARCHITECTURE
ENVIRONMENTAL
PLANNING
TRANSPORTATION
(EB 4516) (LC 62)

NO.	DATE	BY	SUBMITTALS / REVISIONS
1	03-24-23	MT	REVISED PER CITY COMMENTS
2	04-24-23	MT	REVISED PER CITY AND DISTRICT COMMENTS
3	05-26-23	SA	REVISED PER CITY COMMENTS

COASTAL OAKS
FINAL ENGINEERING PLANS
CONSTRUCTION DETAILS

CITY OF PORT ORANGE
VOLUSIA COUNTY, FLORIDA

PROJECT NO: ZC 22119
DESIGNED BY: BB
DRAFTED BY: MT
CHECKED BY: BB
DRAWING FILE: 22119-DET

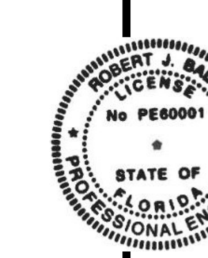

Digitally signed by Robert J Ball
DN: CN=Robert J Ball, dnQualifier=A01410D00000184CE569AA8000AC4E9, O=ZEV COHEN AND ASSOCIATES INC., C=US
Date: 2023.05.31 09:21:33-04'00'

ROBERT J. BALL, P.E., NO.60001
NOT VALID WITHOUT SEAL

SHEET: C13 OF 15

R:\22119 MCGRAY HERBERT STREET PROPERTY – P.O\FINAL ENGINEERING PLANS\CADDWGS\22119-DET.DWG – PRINTED 5/31/2023 9:04 AM

IN ORDER TO ENSURE THAT NEW SUBDIVISIONS AND SITE PLANS ARE CONSTRUCTED SUBSTANTIALLY IN ACCORDANCE WITH CITY REGULATIONS AND THE APPROVED DRAWINGS, THE FOLLOWING INFORMATION IS REQUIRED ON ALL AS-BUILT DRAWINGS:

1. INDIVIDUAL PLAN AND PROFILE SHEETS FOR ALL ROADS AND SANITARY SEWER LINES, SHOWING MANHOLES, INLETS, AND PIPE CROSSINGS. PLAN AND PROFILE SHEETS SHALL SHOW SANITARY LINES AND ALL OTHER BURIED UTILITIES THAT CROSS SEWER LINES, AND ANY THAT ARE PARALLEL AND WITHIN TEN FEET OF SANITARY SEWER LINES. PLAN VIEWS SHALL BE DRAWN AT A SCALE OF ONE (1) INCH EQUAL TO FORTY (40) FEET HORIZONTAL. PROFILES SHALL BE DRAWN AT ONE (1) INCH EQUAL TO FOUR (4) FEET VERTICAL AND ALIGNED VERTICALLY WITH IMPROVEMENTS SHOWN ON THE PLAN VIEW.
2. DESIGN ELEMENTS SHALL BE CROSSED OUT AND AS-BUILT INFORMATION WRITTEN NEXT TO IT.
3. PAVEMENT AND CURB WIDTHS SHALL BE VERIFIED AND DIMENSIONED FOR EACH STREET AT EACH BLOCK FOR SUBDIVISIONS AND AS APPROPRIATE TO CONFIRM PAVING LIMITS FOR SITE PLANS.
4. ALL RADII AT INTERSECTIONS SHALL BE VERIFIED, DIMENSIONED AND CLEARLY INDICATED ON THE AS-BUILT.
5. ROADWAY ELEVATIONS AT CENTERLINE AND CURB INVERT SHALL BE RECORDED AT ALL GRADE CHANGES, 100' INTERVALS FOR LONG ROADWAYS, AND OTHER INTERVALS AS NEEDED. FOR SUBDIVISIONS, THE AS-BUILT CENTERLINE GRADE LINES OF ALL STREETS SHALL BE SHOWN ON THE PLAN AND PROFILE ALONG WITH THE DESIGN PROFILE GRADE LINES. IN THE EVENT THAT THE AS-BUILT CENTERLINE LONGITUDINAL GRADE DOES NOT MEET THE CITY MINIMUM STANDARDS, ADDITIONAL LONGITUDINAL GRADES OF THE ADJACENT CURBING AND SIMILAR ROADWAY CROSS-SECTIONS SHALL BE REQUIRED TO VERIFY THAT THE SYSTEM WILL FUNCTION AS ORIGINALLY DESIGNED.
6. FOR SUBDIVISIONS, PROPOSED DESIGN FINISHED FLOOR ELEVATIONS SHALL APPEAR ON ALL SUBDIVISION LOTS ON THE APPROPRIATE PLAN AND PROFILE SHEET AS WELL AS ON THE MASTER DRAINAGE PLAN.
7. STORM DRAINAGE STRUCTURES SHALL BE LOCATED AND DIMENSIONED FROM STREET/ROADWAY CENTERLINES OR LOT LINES AS APPROPRIATE. STORM DRAINAGE PIPE SHALL BE LOCATED AND DIMENSIONED FROM THE BACK OF CURB, OR EDGE OF PAVEMENT IF NO CURB IS PRESENT.
8. STORM DRAINAGE STRUCTURE RIMS, PIPE INVERT AND INLET BOTTOM ELEVATIONS SHALL BE RECORDED AND CLEARLY DENOTED AS AS-BUILT INFORMATION. STORM DRAINAGE PIPE MATERIAL, LENGTH, AND SIZE SHALL BE RECORDED AND CLEARLY INDICATED AS BEING AS-BUILT INFORMATION.
9. ALL APPLICABLE TOPOGRAPHIC INFORMATION PERTINENT TO THE ON-SITE DRAINAGE SYSTEM, SUCH AS DITCHES, SWALES, LAKES, CANALS, ETC. THAT ARE DEEMED NECESSARY BY THE CITY TO VERIFY THE FUNCTIONAL PERFORMANCE OF THE STORMWATER SYSTEM, SHALL BE NOTED. NORMALLY, RECORDING ELEVATIONS EVERY 100' AT THE TOP OF BANK AND TOE OF SLOPE WILL BE REQUIRED. MEASUREMENTS SHALL BE TAKEN AND RECORDED IN ORDER TO ACCURATELY TIE DOWN THESE FEATURES TO THE ROADWAY CENTERLINES AND TO PLAT LINES WHENEVER POSSIBLE, CONTOUR LINES SHALL BE UTILIZED TO GRAPHICALLY DESCRIBE THESE TOPOGRAPHIC FEATURES.
10. RETENTION AREAS SHALL HAVE THEIR TOP AND BOTTOM OF BANK ELEVATIONS RECORDED. ACTUAL DIMENSIONS OF THE SIZE OF ALL RETENTION AREAS ARE TO BE RECORDED AS MEASURED FROM TOP-OF-BANK TO TOP-OF-BANK WITH SIDE SLOPES INDICATED.
11. ACTUAL MATERIALS USED AND ELEVATIONS AND DIMENSIONS OF OVERFLOW WEIR STRUCTURES AND SKIMMERS SHALL BE NOTED ON THE AS-BUILT.
12. STORM DRAINAGE SWALE CENTERLINES SHALL BE LOCATED AND ELEVATIONS OF FLOW LINE AND TOPS OF BANKS SHALL BE RECORDED EVERY 100 FEET. SIDE SLOPES SHALL ALSO BE INDICATED.

STANDARD CONSTRUCTION DETAIL REQUIREMENTS FOR AS-BUILTS DRAWINGS	FILE NAME M5.DOC	DETAIL REF: M-5
REV. 12/18		

13. SANITARY SEWER STRUCTURES SHALL BE LOCATED AND DIMENSIONED FROM STREET/ROADWAY CENTERLINES OR LOT LINES, AS APPROPRIATE. SANITARY SEWER STRUCTURE RIMS, PIPE INVERTS AND BOTTOM ELEVATIONS SHALL BE RECORDED AND CLEARLY NOTED AS AS-BUILT INFORMATION.
14. SANITARY SEWER PIPE SHALL BE LOCATED AND DIMENSIONED FROM THE BACK OF CURB, OR EDGE OF PAVEMENT IF NO CURB IS PRESENT. SANITARY SEWER PIPE MATERIAL, LENGTH, AND SIZE SHALL BE RECORDED AND CLEARLY INDICATED AS BEING AS-BUILT INFORMATION.
15. SEWER LATERALS SHALL BE RECORDED AT THEIR CLEAN-OUT LOCATIONS. STATIONING AND OFFSET DISTANCES SHALL BE MEASURED FROM DOWNSTREAM MANHOLES TOWARD UPSTREAM MANHOLES.
16. LIFT STATIONS SHALL BE LOCATED AND DIMENSIONED FROM STREET/ROADWAY CENTERLINES OR LOT LINES, AS APPROPRIATE. LIFT STATION DIMENSIONAL AND ELEVATION INFORMATION INDICATED ON THE APPROVED FOR CONSTRUCTION PLANS SHALL BE VERIFIED AND AS-BUILT INFORMATION INDICATED. BURIED ELECTRICAL SERVICE LINE SHALL BE CLEARLY DIMENSIONED, LOCATED, AND LABELED. FORCE MAIN PIPE INVERT ELEVATIONS SHALL BE RECORDED AND CLEARLY DENOTED AS AS-BUILT INFORMATION.
17. FORCE MAIN PIPE SHALL BE LOCATED AND DIMENSIONED FROM THE BACK OF CURB, OR EDGE OF PAVEMENT IF NO CURB IS PRESENT. FORCE MAIN PIPE MATERIAL, LENGTH, AND SIZE SHALL BE RECORDED AND CLEARLY INDICATED AS BEING AS-BUILT INFORMATION.
18. TIE-IN DIMENSIONS TO THREE (3) PERMANENT ABOVE GRADE FEATURES SHALL BE SHOWN ON THE AS-BUILTS FOR ALL VALVES, TEES, BENDS, CROSSES, SERVICE CONNECTION TEES, FIRE HYDRANTS AND APPLICABLE FIXTURES AT THE POTABLE WATER, RECLAIMED WATER AND FORCE MAIN SERVICES.
19. A TABLE SHALL BE SHOWN ON THE AS-BUILTS LISTING THE NORTHING, EASTING, TOP ELEVATION, SIZE, MATERIAL, TYPE AND MODEL INFORMATION FOR ALL POTABLE WATER, RECLAIMED WATER AND FORCE MAIN VALVES, TEES, BENDS, CROSSES, SERVICE CONNECTION TEES, FIRE HYDRANTS AND APPLICABLE FIXTURES.
20. FOR PERPENDICULAR CROSSINGS OF STORMWATER, POTABLE WATER, RECLAIMED WATER, OR FORCE MAIN SERVICES, THE AS-BUILT PLANS SHALL CLEARLY INDICATE WHICH UTILITIES ARE LOCATED OVER OR UNDER OTHER UTILITIES.
21. ANY SPECIAL FEATURES SUCH AS, CONCRETE FLUMES, LAKE BANKS, WALLS, FENCING, ETC., WHICH WERE A PART OF THE APPROVED CONSTRUCTION DRAWINGS SHALL ALSO BE LOCATED AND DIMENSIONED.
22. IF AN APPROVED SUBDIVISION PLAT OR SITE PLAN SHOWS A CONSERVATION EASEMENT, THE PROJECT SURVEYOR SHALL PROVIDE THE EXACT LOCATION OF THE SPECIMEN TREE(S) FROM THE RIGHT-OF-WAY OR PROPERTY LINES AND PROPOSED EASEMENT BOUNDARIES ON THE AS-BUILT DRAWING. THE AS-BUILT LOCATION OF THESE TREES WILL HELP VERIFY THE SUFFICIENCY OF THE CONSERVATION EASEMENT PRIOR TO PLAT RECORDING OR CERTIFICATE OF OCCUPANCY.
23. WHEN STORMWATER, POTABLE WATER, RECLAIMED WATER OR SANITARY SEWER IMPROVEMENTS ARE LOCATED WITHIN AN EASEMENT, THE AS-BUILT DRAWING SHALL ACCURATELY DEPICT THE LOCATION OF THE IMPROVEMENTS AND THE EASEMENT. SUCH DOCUMENTATION AND THE ASSOCIATED PROPOSED EASEMENT DOCUMENT WITH LEGAL DESCRIPTION SHALL BE SUBMITTED FOR CITY REVIEW AND APPROVAL PRIOR TO RECORDING OF SAID EASEMENT. UPON CITY APPROVAL, THE EASEMENT SHALL BE RECORDED VIA A SEPARATE LEGAL INSTRUMENT.

STANDARD CONSTRUCTION DETAIL REQUIREMENTS FOR AS-BUILTS DRAWINGS (CONTINUED)	FILE NAME M5.DOC	DETAIL REF: M-5.1
REV. 12/18		

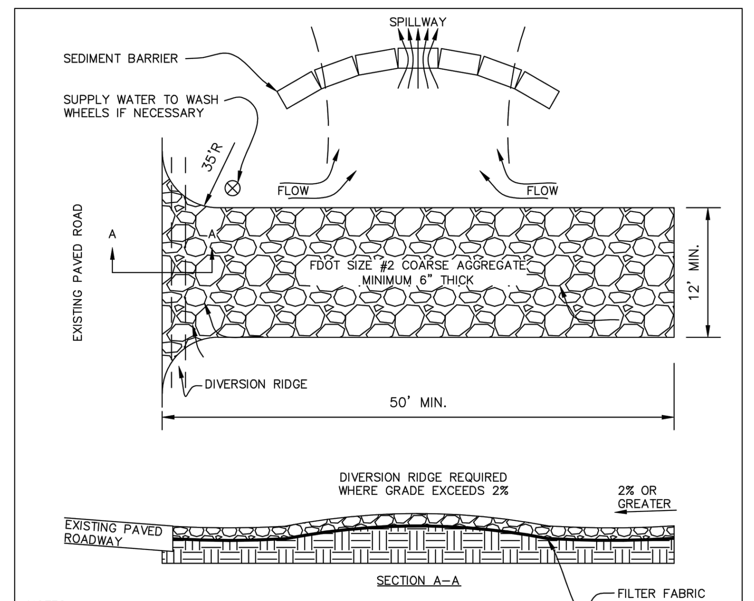

NOTES:

1. THE ENTRANCE SHALL BE MAINTAINED IN A CONDITION THAT WILL PREVENT TRACKING OR FLOWING OF SEDIMENT ONTO PUBLIC RIGHTS–OF–WAY. THIS MAY REQUIRE TOP DRESSING, REPAIR AND/OR CLEANOUT OF ANY MEASURES USED TO TRAP SEDIMENT.
2. WHEN PASSIVE MEANS FAIL TO PREVENT TRACKING OF SEDIMENT ONTO PUBLIC RIGHTS–OF–WAY, WHEELS SHALL BE CLEANED PRIOR TO ENTERING ONTO PUBLIC RIGHTS–OR–WAY.
3. WHEN WASHING IS REQUIRED, IT SHALL BE DONE ON AN AREA STABILIZED WITH CRUSHED STONE THAT DRAINS INTO AN APPROVED SEDIMENT TRAP OR SEDIMENT BASIN.
4. ALL MATERIALS SPILLED, DROPPED, OR TRACKED ONTO PUBLIC RIGHTS–OF–WAY (INCLUDING T.G.C.E. AGGREGATE AND CONSTRUCTION MUD) SHALL BE REMOVED DAILY, OR MORE FREQUENTLY, IF SO DIRECTED.
5. A SOIL TRACKING PREVENTION DEVICE IS AN ACCEPTABLE ALTERNATIVE TO THIS DETAIL. REFERENCE FDOT INDEX 106 FOR DETAILS.

STANDARD CONSTRUCTION DETAIL TEMPORARY GRAVEL CONSTRUCTION ENTRANCE	FILE NAME: M21.DWG	DETAIL REF: M-21
REV. 12/18		

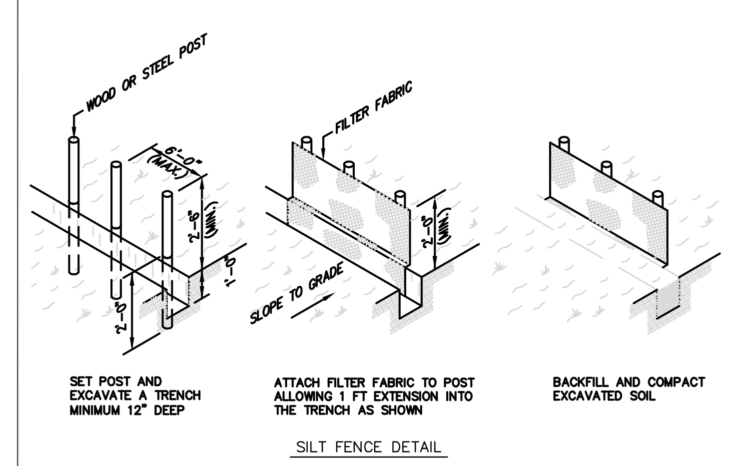

NOTES:

1. MATERIALS, CONSTRUCTION METHODS AND MAINTENANCE SHALL BE IN ACCORDANCE WITH THE STATE OF FLORIDA EROSION AND SEDIMENT CONTROL DESIGNER AND REVIEWER MANUAL (LATEST EDITION).
2. CONTRACTOR SHALL PROVIDE SILT FENCES OR HAVE BEST MANAGEMENT PRACTICES IMPLEMENTED AS REQUIRED AT ALL STORMWATER DISCHARGE POINTS FOR EROSION CONTROL AND SEDIMENT CONTROL DURING CONSTRUCTION.
3. CONTRACTOR SHALL ROUGH GRADE STORMWATER SWALES AND RETENTION AREAS PRIOR TO CONSTRUCTION OF SITE IMPROVEMENTS.
4. CONTRACTOR SHALL MEET ALL PERMIT CONDITIONS AS ESTABLISHED BY THE CITY OF PORT ORANGE AND ALL OTHER APPLICABLE AGENCIES, INCLUDING BUT NOT LIMITED TO COUNTY, FDOT, AND THE SJRWMD.
5. CONTRACTOR WILL BE ALLOWED TO USE A SMALL PIECE OF EQUIPMENT UP 6' WIDTH AND 1.5 TON WEIGHT, TO CLEAR A NARROW PATH TO INSTALL THE SILT FENCE.

STANDARD CONSTRUCTION DETAIL SILT FENCE TURBIDITY BARRIER	FILE NAME: M23.DWG	DETAIL REF: M-23
REV. 12/18		

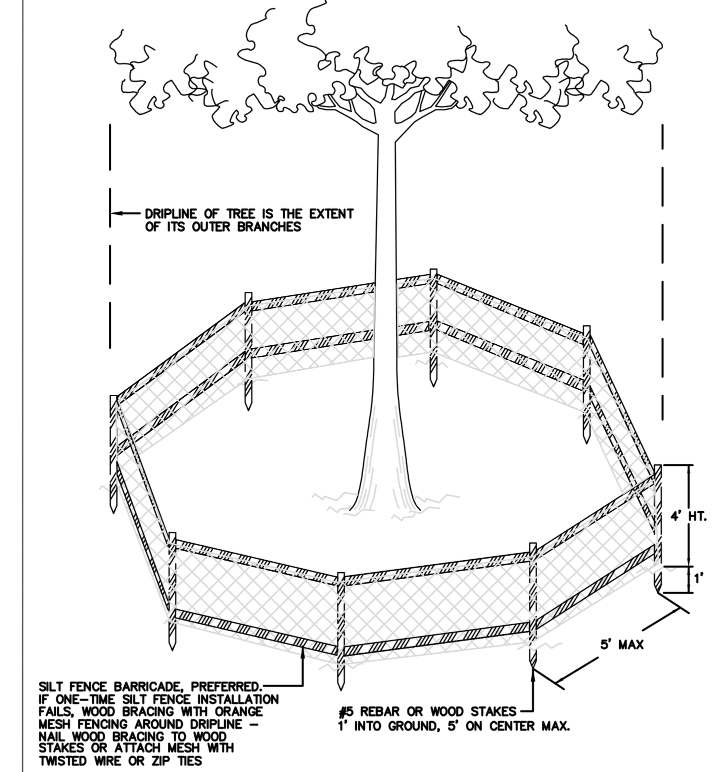

STANDARD CONSTRUCTION DETAIL TREE PROTECTION BARRICADE	FILE NAME: M25.DWG	DETAIL REF: M-25
REV. 12/18		

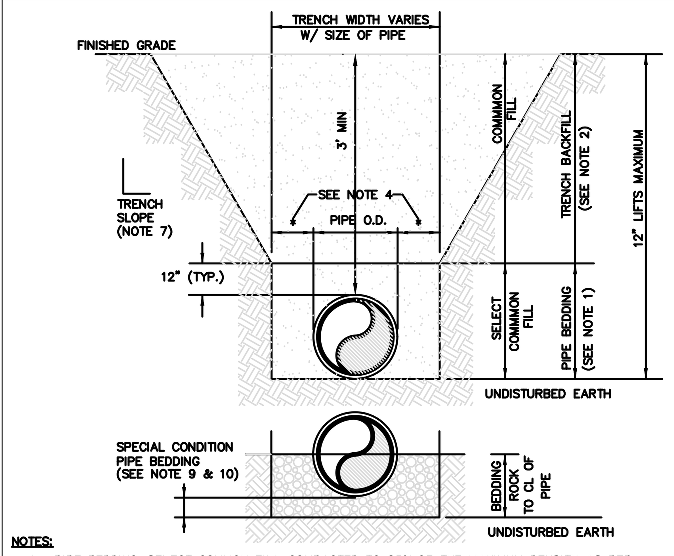

NOTES:

1. PIPE BEDDING: SELECT COMMON FILL COMPACTED TO 95% OF THE MAXIMUM DENSITY AS PER AASHTO T–180.
2. TRENCH BACKFILL: COMMON FILL COMPACTED TO 95% OF THE MAXIMUM DENSITY AS PER AASHTO T–180. 98% DENSITY REQUIRED UNDER DRIVEWAYS, PAVEMENT AND STRUCTURES.
3. PIPE BEDDING UTILIZING SELECT COMMON FILL OR BEDDING ROCK IN ACCORDANCE WITH TYPE "A" BEDDING AND TRENCHING DETAIL MAY BE REQUIRED AS DIRECTED BY THE CITY.
4. (*) 15" MAX. FOR PIPE DIAMETER LESS THAN 24", AND 24" MAX. FOR PIPE DIAMETER 24" AND LARGER.
5. WATER SHALL NOT BE PERMITTED IN THE TRENCH DURING CONSTRUCTION.
6. ALL PIPE TO BE INSTALLED WITH BELL FACING UPSTREAM TO THE DIRECTION OF FLOW.
7. REFER TO OSHA REQUIREMENTS FOR SLOPING, SHEETING AND BRACING IN EXCAVATIONS.
8. FINAL RESTORATION IN IMPROVED AREAS SHALL BE IN COMPLIANCE WITH ALL APPLICABLE REGULATIONS OF GOVERNING AGENCIES. SURFACE RESTORATION WITHIN RIGHT–OF–WAY SHALL COMPLY WITH REQUIREMENTS OF RIGHT–OF–WAY UTILIZATION REGULATIONS AND ROAD CONSTRUCTION SPECIFICATIONS.
9. GRAVITY SEWERS SHALL UTILIZE BEDDING ROCK WHERE UNSUITABLE MATERIAL EXISTS. BEDDING DEPTH SHALL BE 4" MINIMUM FOR PIPE DIAMETER LESS THAN 15", AND 6" MINIMUM FOR PIPE DIAMETER 16" AND LARGER.
10. DEPTH FOR REMOVAL OF UNSUITABLE MATERIAL SHALL GOVERN DEPTH OF BEDDING ROCK BELOW THE PIPE. CITY SHALL DETERMINE IN THE FIELD REQUIRED REMOVAL OF UNSUITABLE MATERIAL TO REACH SUITABLE FOUNDATION.

STANDARD CONSTRUCTION DETAIL PIPE BEDDING AND TRENCH	FILE NAME: M27.DWG	DETAIL REF: M-27
REV. 12/18		

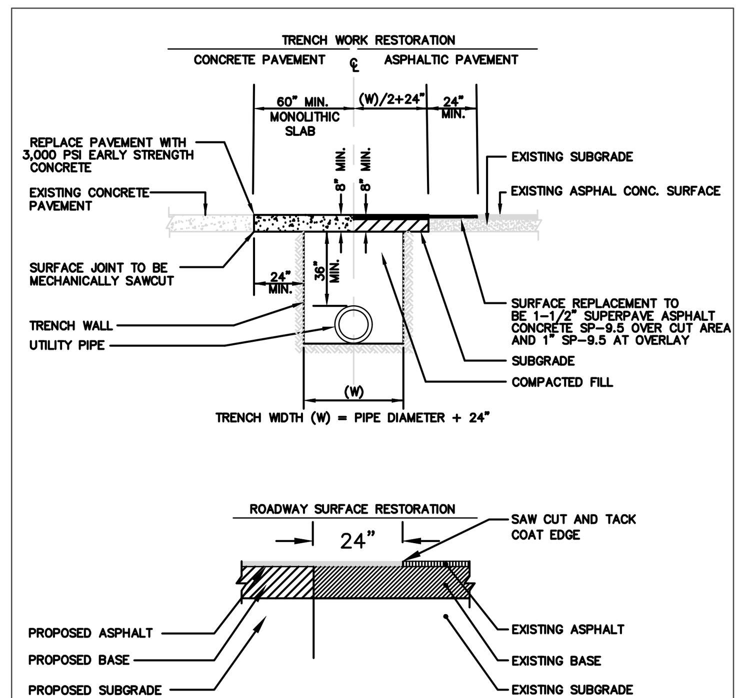

NOTES:

1. PAVING REPLACEMENT SHALL INCLUDE RAISING ALL MANHOLE FRAMES/LIDS AND VALVE BOXES/LIDS, AND SIMILAR APPURTENANCES, TO FINAL ELEVATION PRIOR TO RESURFACING.
3. REPLACEMENT BASE MATERIAL TO BE LIMEROCK OR RECYCLED CONCRETE. BASE AND ANY SUBBASE TO BE COMPACTED TO 98% DENSITY BASED ON AASHTO T–180 MODIFIED PROCTOR TEST.
4. IN AREAS WHERE CONCRETE PAVEMENT IS TO BE UTILIZED, AREA MUST REMAIN FREE OF VEHICULAR TRAFFIC FOR A MINIMUM OF 3 DAYS.

STANDARD CONSTRUCTION DETAIL PAVEMENT RESTORATION	FILE NAME: R13.DWG	DETAIL REF: R-13
REV. 12/18		

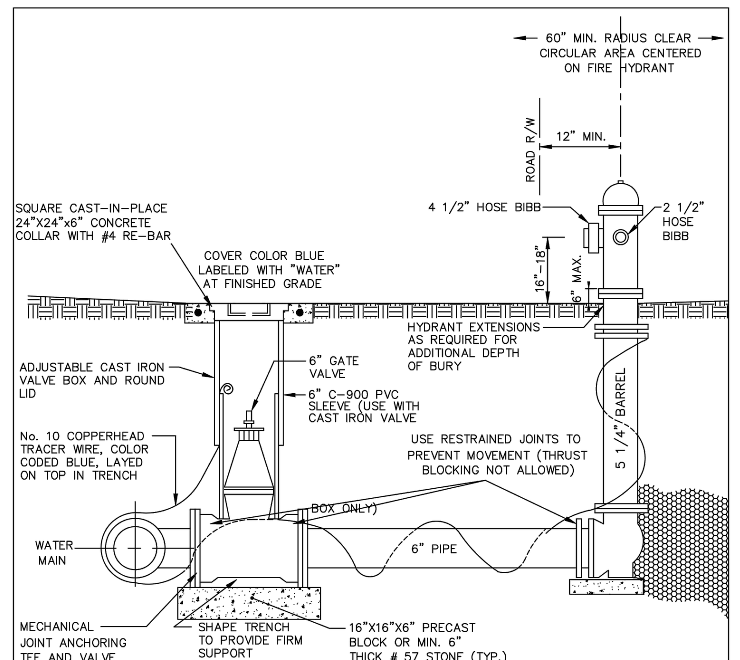

NOTES:

1. HYDRANTS SHALL BE BREAK AWAY TYPE WITH PUMPER NOZZLE FACING STREET.
1. HYDRANTS SHALL BE NON–DRAINING TYPE.
2. HYDRANTS TO BE PAINTED EMERGENCY YELLOW AT MANUFACTURE–EPOXY OR POLYURETHANE.
3. HOSE BIBBS TO BE AMERICAN STANDARD THREADS.
4. ADJUSTABLE TRENCH ADAPTOR ASSEMBLY REQUIRED FOR ALL VALVES GREATER THAN 36" DEEP.
5. INSTALL AT SIDE LOT LINES OR AT CORNERS OF ROADWAY INTERSECTIONS (TYP.).
6. ALL OUTSIDE HEX NUTS, BOLTS AND HARDWARES (EXCEPT MECHANICAL BOLTS SUCH AS "T" BOLTS) SHALL BE MINIMUM 316 STAINLESS STEEL GRADE.
7. THE INTERNAL UPPER AND LOWER STEM SHALL BE MINIMUM 304 STAINLESS STEEL GRADE.

STANDARD CONSTRUCTION DETAIL FIRE HYDRANT ASSEMBLY	FILE NAME: W20.DWG	DETAIL REF: W-20
REV. 12/18		

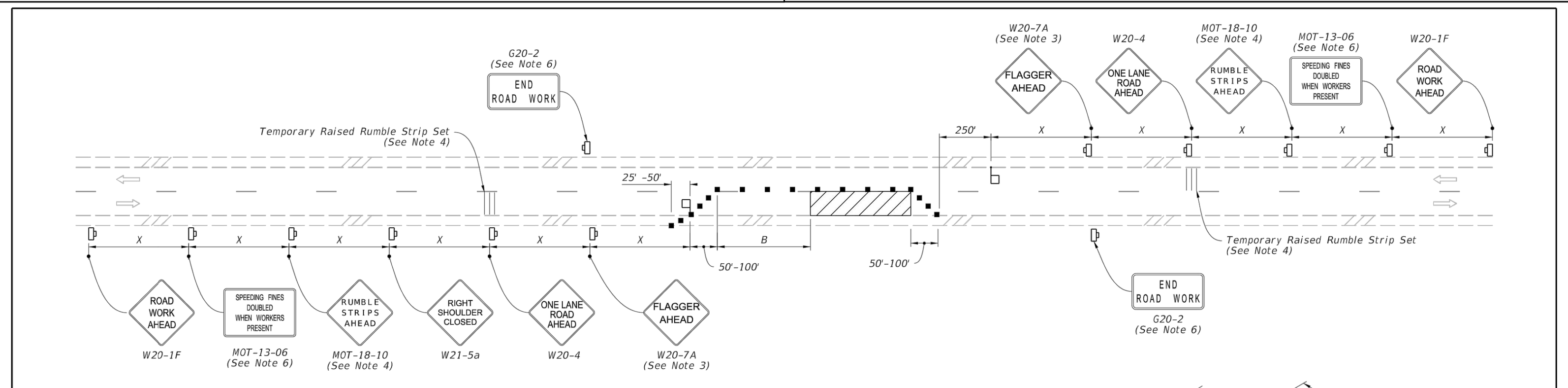

NOTES:

1. This Index applies to Two-Lane, Two-Way Roadways with work within the traveled way.
2. L = Taper Length
B = Buffer Length
X = Work Zone Sign Spacing
See Index 102-600 for "L", "B", "X" and channelizing device spacing values.
3. Optionally, use "Flagger Ahead" sign with symbol (W20-7) instead of "Flagger Ahead" sign with text (W20-7A).
4. Use temporary raised rumble strips when the existing posted speed is 55 mph or greater and the work duration is greater than 60 minutes. If temporary raised rumble strips are not used, omit "Rumble Strips Ahead" signs (MOT-18-10) and associated work zone sign spacing.
5. Additional one-way control may be provided by the following means:
a. Flag-carrying vehicle
b. Official vehicle
c. Pilot vehicles
d. Traffic signals

When flaggers are the sole means of one-way control, the flaggers must be in sight of each other or in direct communication at all times.
6. The "Speeding Fines Doubled When Workers Present" signs (MOT-13-06) and "End Road Work" signs (G20-2), along with associated work zone sign spacing, may be omitted when the work operation will be in place for 24 hours or less.
7. Automated Flagger Assistance Devices (AFADs) may be used in accordance with Specification Sections 102, 990 and the APL vendor drawings.
8. Railroad Crossings:
a. If an active railroad crossing is located closer to the Work Area than the queue length plus 300 feet, extend the Buffer Space as shown on Sheet 2.
b. If the queuing of vehicles across an active railroad crossing cannot be avoided, provide a uniformed traffic control officer or flagger at the highway-rail grade crossing to prevent vehicles from stopping within the highway-rail grade crossing, even if automatic train warning devices are in place.

SYMBOLS:
- Work Area
- Channelizing Device (See Index 102-600)
- Work Zone Sign
- Flagger
- Lane Identification and Direction of Traffic

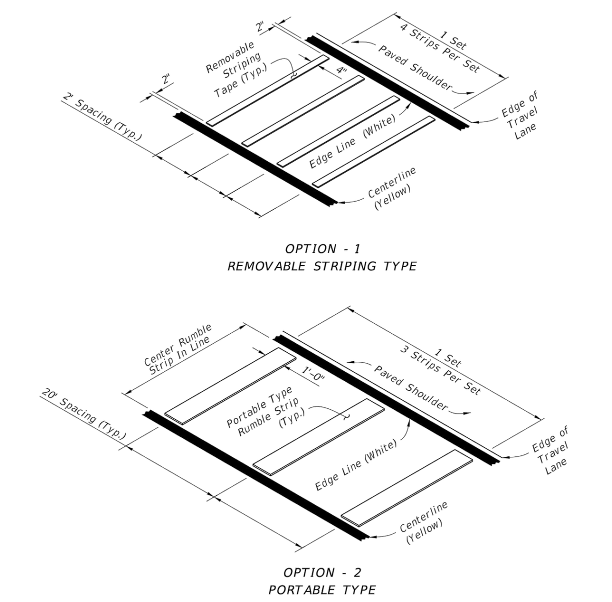

RUMBLE STRIP SETS

LAST REVISION 11/01/21	DESCRIPTION:	FDOT FY 2023-24 STANDARD PLANS	TWO-LANE, TWO-WAY WORK WITHIN THE TRAVEL WAY	INDEX 102-603	SHEET 1 of 2

TEMPORARY RAILROAD CROSSING BUFFER SPACE EXTENSION

TEMPORARY LANE SHIFT TO SHOULDER WHEN WORK AREA ENCROACHES ON THE CENTERLINE
(For Work Operations In place 24 Hours or Less)

SYMBOLS:
- Work Area
- Channelizing Device (See Index 102-600)
- Work Zone Sign
- Flagger
- Lane Identification and Direction of Traffic

SPECIAL CONDITIONS

LAST REVISION 11/01/21	DESCRIPTION:	FDOT FY 2023-24 STANDARD PLANS	TWO-LANE, TWO-WAY WORK WITHIN THE TRAVEL WAY	INDEX 102-603	SHEET 2 of 2

ZEV COHEN & ASSOCIATES, INC.
300 INTERCHANGE BLVD., STE. C
ORMOND BEACH, FL 32174
WWW.ZEVCOHEN.COM

CIVIL ENGINEERING
LANDSCAPE ARCHITECTURE
ENVIRONMENTAL
PLANNING
TRANSPORTATION
(EB 4516) (LC 62)

NO.	DATE	BY	SUBMITTALS / REVISIONS
1	03-24-23	MT	REVISED PER CITY COMMENTS
2	04-24-23	MT	REVISED PER CITY AND DISTRICT COMMENTS
3	05-26-23	SA	REVISED PER CITY COMMENTS

COASTAL OAKS
FINAL ENGINEERING PLANS
CONSTRUCTION DETAILS

CITY OF PORT ORANGE
VOLUSIA COUNTY, FLORIDA

PROJECT NO: ZC 22119
DESIGNED BY: BB
DRAFTED BY: MT
CHECKED BY: BB
DRAWING FILE: 22119-DET

ROBERT J. BALL LICENSE No PE60001 STATE OF FLORIDA PROFESSIONAL ENGINEER

Digitally signed by Robert J Ball
DN: CN=Robert J Ball, dnQualifier=A01410D00000184CE569AA8000AC4E9, O=ZEV COHEN AND ASSOCIATES INC., C=US
Date: 2023.05.31 09:21:35-04'00'

ROBERT J. BALL, P.E., NO.60001
NOT VALID WITHOUT SEAL

SHEET: C14 OF 15

R:\22119 MCGRAY HERBERT STREET PROPERTY – P.O\FINAL ENGINEERING PLANS\CADDWGS\22119-DET.DWG – PRINTED 5/31/2023 9:04 AM

ACO DRAIN

KlassikDrain - K100 Galvanized steel edge rail channel system

One meter channel

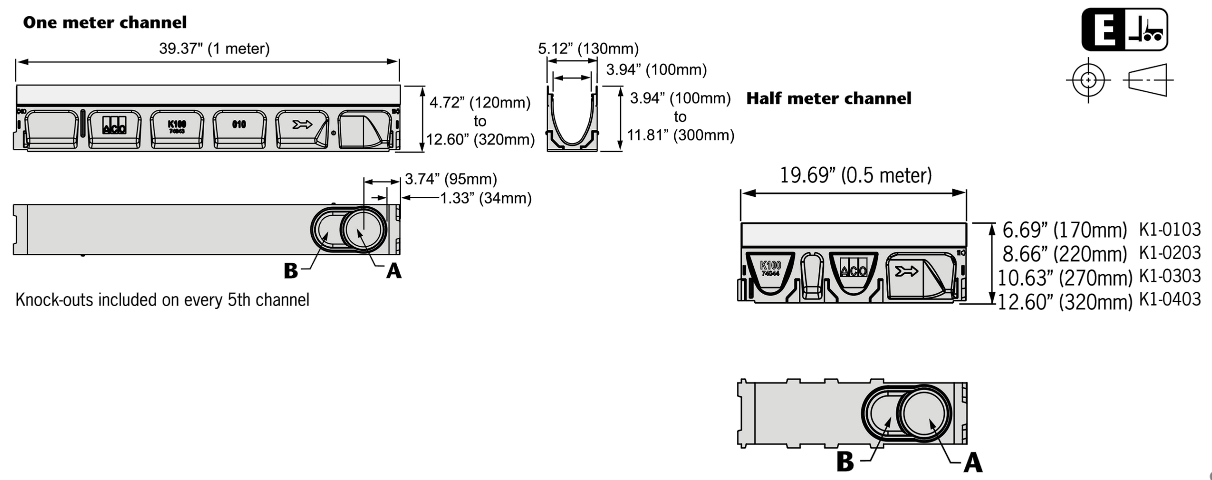

Knock-outs included on every 5th channel

Type K901G In-line catch basin

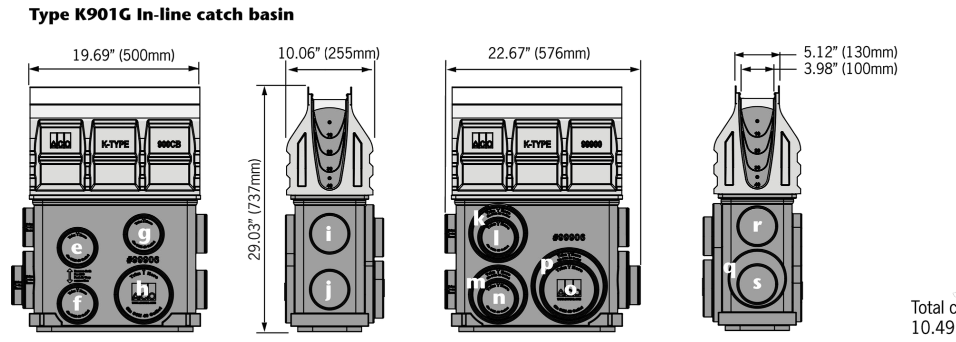

Total capacity = 10.49 gallons

Outlet flow rates

Outlet	Product	Outlet size (Sch. 40)	Invert Depth	GPM	CFS
a	Bottom outlet - K00	4" round	3.94"	108	0.24
a	Bottom outlet - K40	4" round	11.81"	187	0.42
b	Bottom outlet - K00	6" oval	3.94"	177	0.39
b	Bottom outlet - K40	6" oval	11.81"	306	0.68
c	End outlet - K20	4" round	7.87"	132	0.29
c	End outlet - K40	4" round	11.81"	171	0.38
d	K1-308-6 6" outlet cap	6" oval	9.84"	233	0.52
d	K1-408-6 6" outlet cap	6" oval	11.81"	264	0.59
e	Type K1-901G	4" round	20.68"	235	0.52
f	Type K1-901G	4" round	27.17"	226	0.50
g	Type K1-901G	4" round	18.99"	265	0.59
h	Type K1-901G	6" round	27.17"	263	0.59
i	Type K1-901G	4" round	19.30"	222	0.49
j	Type K1-901G	4" round	25.67"	586	1.30
k	Type K1-901G	6" round	19.99"	269	0.60
l	Type K1-901G	4" round	19.36"	227	0.51
m	Type K1-901G	6" round	27.30"	604	1.35
n	Type K1-901G	4" round	26.43"	505	1.12
o	Type K1-901G	6" round	26.43"	593	1.32
p	Type K1-901G	8" round	27.30"	1051	2.34
q	Type K1-901G	6" round	25.85"	273	0.61
r	Type K1-901G	4" round	18.56"	235	0.52
s	Type K1-901G	4" round	25.30"	224	0.50

Note: These are the pipe flow rates at the specified outlet, **NOT** channel flow rates. Catch basin flow rates are without trash bucket - using trash bucket reduces flow.

End Cap

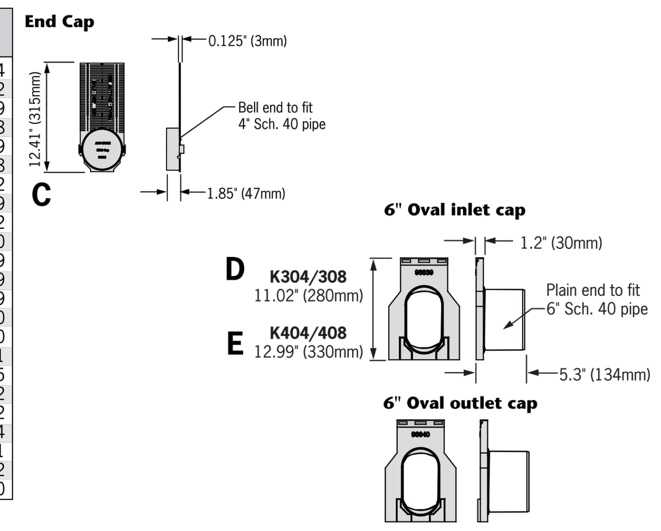

ACO Specification Information

February 2019 www.acousa.com

ACO DRAIN

KlassikDrain - K100 Galvanized steel edge rail channel system

Description	Part No.	Invert Inches[2]	Invert mm[2]	Weight Lbs.
K1-00 Neutral channel - 39.37" (1m)[1]	**74041**	**3.94**	**100**	**28.1**
K1-1 Sloped channel - 39.37" (1m)	74001	4.13	105	28.1
K1-2 Sloped channel - 39.37" (1m)	74002	4.33	110	28.9
K1-3 Sloped channel - 39.37" (1m)	74003	4.53	115	29.7
K1-4 Sloped channel - 39.37" (1m)	74004	4.72	120	30.5
K1-5 Sloped channel - 39.37" (1m)[1]	74005	4.92	125	31.3
K1-6 Sloped channel - 39.37" (1m)	74006	5.12	130	32.1
K1-7 Sloped channel - 39.37" (1m)	74007	5.31	135	32.9
K1-8 Sloped channel - 39.37" (1m)	74008	5.51	140	33.7
K1-9 Sloped channel - 39.37" (1m)	74009	5.71	145	34.5
K1-10 Sloped channel - 39.37" (1m)[1]	74010	5.91	150	35.3
K1-010 Neutral channel - 39.37" (1m)[1]	**74043**	**5.91**	**150**	**35.3**
K1-0103 Neutral channel - 19.69" (0.5m)[1]	**74044**	**5.91**	**150**	**17.0**
K1-11 Sloped channel - 39.37" (1m)	74011	6.10	155	36.1
K1-12 Sloped channel - 39.37" (1m)	74012	6.30	160	36.9
K1-13 Sloped channel - 39.37" (1m)	74013	6.50	165	37.7
K1-14 Sloped channel - 39.37" (1m)	74014	6.69	170	38.5
K1-15 Sloped channel - 39.37" (1m)[1]	74015	6.89	175	39.3
K1-16 Sloped channel - 39.37" (1m)	74016	7.09	180	40.1
K1-17 Sloped channel - 39.37" (1m)	74017	7.28	185	40.9
K1-18 Sloped channel - 39.37" (1m)	74018	7.48	190	41.7
K1-19 Sloped channel - 39.37" (1m)	74019	7.68	195	42.5
K1-20 Sloped channel - 39.37" (1m)[1]	74020	7.87	200	43.4
K1-020 Neutral channel - 39.37" (1m)[1]	**74045**	**7.87**	**200**	**43.4**
K1-0203 Neutral channel - 19.69" (0.5m)[1]	**74046**	**7.87**	**200**	**20.5**
K1-21 Sloped channel - 39.37" (1m)	74021	8.07	205	44.2
K1-22 Sloped channel - 39.37" (1m)	74022	8.27	210	45.0
K1-23 Sloped channel - 39.37" (1m)	74023	8.46	215	45.8
K1-24 Sloped channel - 39.37" (1m)	74024	8.66	220	46.6
K1-25 Sloped channel - 39.37" (1m)[1]	74025	8.86	225	47.4
K1-26 Sloped channel - 39.37" (1m)	74026	9.06	230	48.2
K1-27 Sloped channel - 39.37" (1m)	74027	9.25	235	49.0
K1-28 Sloped channel - 39.37" (1m)	74028	9.45	240	49.8
K1-29 Sloped channel - 39.37" (1m)	74029	9.65	245	50.6
K1-30 Sloped channel - 39.37" (1m)[1]	74030	9.84	250	51.4
K1-030 Neutral channel - 39.37" (1m)[1]	**74047**	**9.84**	**250**	**51.4**
K1-0303 Neutral channel - 19.69" (0.5m)[1]	**74048**	**9.84**	**250**	**24.0**
K1-31 Sloped channel - 39.37" (1m)	74031	10.04	255	52.2
K1-32 Sloped channel - 39.37" (1m)	74032	10.24	260	53.0
K1-33 Sloped channel - 39.37" (1m)	74033	10.43	265	53.8
K1-34 Sloped channel - 39.37" (1m)	74034	10.63	270	54.6
K1-35 Sloped channel - 39.37" (1m)[1]	74035	10.83	275	55.4
K1-36 Sloped channel - 39.37" (1m)	74036	11.02	280	56.2
K1-37 Sloped channel - 39.37" (1m)	74037	11.22	285	57.0
K1-38 Sloped channel - 39.37" (1m)	74038	11.42	290	57.9
K1-39 Sloped channel - 39.37" (1m)	74039	11.61	295	58.7
K1-40 Sloped channel - 39.37" (1m)[1]	74040	11.81	300	59.5
K1-040 Neutral channel - 39.37" (1m)[1]	**74049**	**11.81**	**300**	**59.5**
K1-0403 Neutral channel - 19.69" (0.5m)[1]	**74050**	**11.81**	**300**	**27.5**
K1-901G In-line catch basin - 19.69" (0.5m)[3]	94608	28.81	701.9	52.6
K1-621G catch basin - 19.69" (0.5m)[3]	94617	28.84	732.5	55.8
K1-631G catch basin - 19.69" (0.5m)[4]	94631	40.84	1037.4	65.8
K1-Series 600 Optional plastic riser	99902	-	-	10.0
Foul air trap - fits both 900 & 600 series basins	90854	-	-	1.2
K1-304-6 6" Inlet Cap	96839	9.84	250	5.2
K1-308-6 6" Outlet Cap	96840	9.84	250	5.0
K1-404-6 6" Inlet Cap	96834	11.81	300	6.0
K1-408-6 6" Outlet Cap	96836	11.81	300	5.8
Universal end cap	96822	11.81	300	0.4
Debris strainer for 4" bottom knockout	93488	-	-	0.2
4" Oval to 6" round outlet adapter	95140	-	-	1.1
K1-Installation device	97477	-	-	2.8
Grate removal tool	01318	-	-	0.3
K1-QuickLok locking bar	02899	-	-	0.1

Notes:
1. This channel offers a bottom knockout feature; 4" round/6" oval.
2. Inverts shown are for the male end; for female invert depth subtract 5mm (≈0.2") from the male invert (except for neutral channels, where it will be same as male invert). To calculate the overall channel depth add 20mm (≈0.8") to invert depth.
3. This catch basin kit includes a polymer concrete top, removable Quicklok locking bar, trash bucket and plastic base. Select an appropriate grate.
4. This catch basin kit includes a polymer concrete top, removable Quicklok locking bar, deep trash bucket, plastic riser and plastic base. Select an appropriate grate.

Specifications

General
The surface drainage system shall be ACO Drain K100 complete with gratings secured with 'QuickLok' locking as manufactured by ACO, Inc. or approved equal.

Materials
The trench system bodies shall be manufactured from polyester polymer concrete with the minimum properties as follows:

Compressive strength:	14,000 psi
Flexural strength:	4,000 psi
Water absorption	0.07%
Frost proof	YES
Salt proof	YES
Dilute acid and alkali resistant	YES

The nominal clear opening shall be 4" (100mm) with overall width of 5.12" (130mm). Pre-cast units shall be manufactured with either an invert slope of 0.5% or with neutral invert and have a wall thickness of at least 0.50" (13mm). Each unit will feature a partial radius in the trench bottom and a male to female interconnecting end profile. Units shall have horizontal cast in anchoring keys on the outside wall to ensure maximum mechanical bond to the surrounding bedding material and pavement surface. The galvanized steel edge rail will be integrally cast in by the manufacturer to ensure maximum homogeneity between polymer concrete body and edge rail. Each edge rail shall be at least 3/32" (2.5mm) thick.

Grates
Grates shall be specified. See separate ACO Spec Info grate sheets for details. After removal of grates and 'QuickLok' bar there shall be uninterrupted access to the trench to aid maintenance.

Installation
The trench drain system shall be installed in accordance with the manufacturer's installation instructions and recommendations.

ACO, Inc.

Northeast Sales Office
9470 Pinecone Drive
Mentor, OH 44060
Tel: (440) 639-7230
Toll free: (800) 543-4764
Fax: (440) 639-7235

West Sales Office
825 W. Beechcraft St.
Casa Grande, AZ 85122
Tel: (520) 421-9988
Toll Free: (888) 490-9552
Fax: (520) 421-9899

Southeast Sales Office
4211 Pleasant Road
Fort Mill, SC 29708
Toll free: (800) 543-4764
Fax: (803) 802-1063

Electronic Contact:
info@acousa.com
www.acousa.com

SPEC INFO ACO

© February 2019 ACO, Inc. This information is believed to be accurate but it is not guaranteed to be so. We cannot assume liability for results that buyer obtains with our product since conditions of use are beyond the control of the company. It is the customer's responsibility to evaluate suitability and safety of product for his own use. ACO, Inc. reserves the right to change the product and specifications without notice. v1.1

ACO Specification Information

February 2019 www.acousa.com

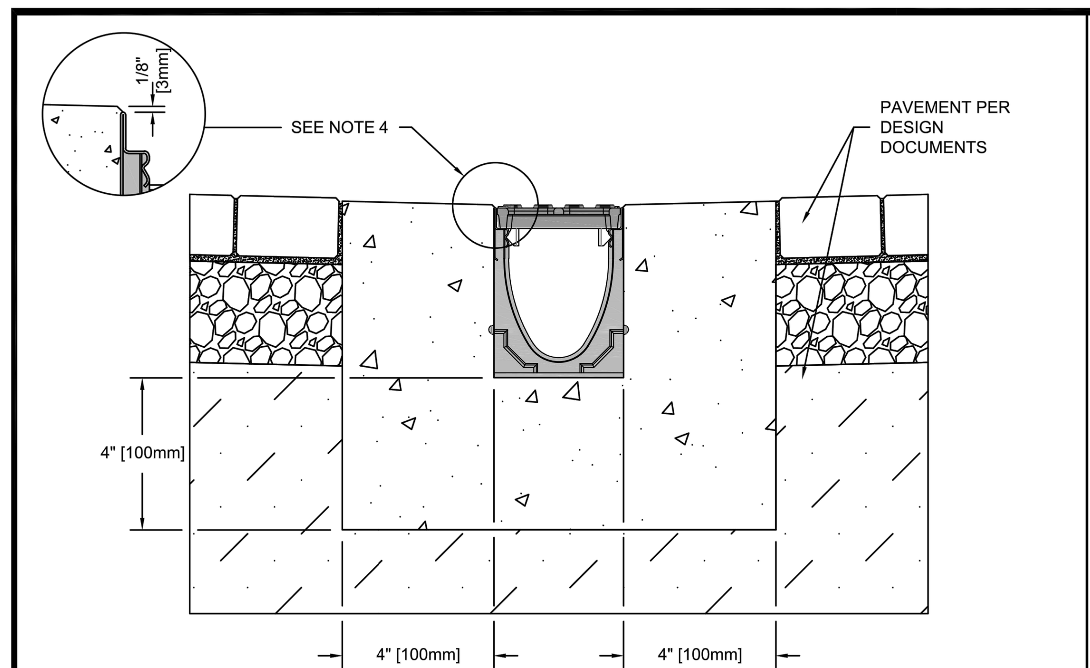

NOTES:
1. IT IS NECESSARY TO ENSURE MINIMUM DIMENSIONS SHOWN ARE SUITABLE FOR EXISTING GROUND CONDITIONS. *ENGINEERING ADVICE MAY BE REQUIRED.*
2. MINIMUM CONCRETE STRENGTH OF 4,000 PSI IS RECOMMENDED. CONCRETE SHOULD BE VIBRATED TO ELIMINATE AIR POCKETS.
3. EXPANSION AND CONTRACTION CONTROL JOINTS AND REINFORCEMENT ARE RECOMMENDED TO PROTECT CHANNEL AND CONCRETE SURROUND. *ENGINEERING ADVICE MAY BE REQUIRED.*
4. THE FINISHED LEVEL OF THE CONCRETE SURROUND MUST BE APPROX. 1/8" [3mm] ABOVE THE TOP OF THE CHANNEL EDGE.
5. CONCRETE BASE THICKNESS SHOULD MATCH SLAB THICKNESS. ENGINEERING ADVICE MAY BE REQUIRED TO DETERMINE PROPER LOAD CLASS.
6. REFER TO ACO'S LATEST INSTALLATION INSTRUCTIONS FOR FURTHER DETAILS.

SPECIFICATION CLAUSE

K100 KLASSIKDRAIN 'DRAINLOK' LOAD CLASS A

GENERAL
THE SURFACE DRAINAGE SYSTEM SHALL BE POLYMER CONCRETE K100 CHANNEL SYSTEM WITH GALVANIZED STEEL EDGE RAILS AS MANUFACTURED BY ACO POLYMER PRODUCTS, INC.

MATERIALS
CHANNELS SHALL BE MANUFACTURED FROM POLYESTER RESIN POLYMER CONCRETE WITH AN INTEGRALLY CAST-IN GALVANIZED STEEL EDGE RAIL. MINIMUM PROPERTIES OF POLYMER CONCRETE WILL BE AS FOLLOWS:

COMPRESSIVE STRENGTH:	14,000 PSI
FLEXURAL STRENGTH:	4,000 PSI
TENSILE STRENGTH:	1,500 PSI
WATER ABSORPTION:	0.07%
FROST PROOF	YES
DILUTE ACID AND ALKALI RESISTANT	YES
B117 SALT SPRAY TEST COMPLIANT	YES

THE SYSTEM SHALL BE 4" (100mm) NOMINAL INTERNAL WIDTH WITH A 5.1" (130mm) OVERALL WIDTH AND A BUILT-IN SLOPE OF 0.5%. CHANNEL INVERT SHALL HAVE DEVELOPED "V" SHAPE. ALL CHANNELS SHALL BE INTERLOCKING WITH A MALE/FEMALE JOINT.

THE COMPLETE DRAINAGE SYSTEM SHALL BE BY ACO POLYMER PRODUCTS, INC. ANY DEVIATION OR PARTIAL SYSTEM DESIGN AND/OR IMPROPER INSTALLATION WILL VOID ANY AND ALL WARRANTIES PROVIDED BY ACO POLYMER PRODUCTS, INC.

CHANNEL SHALL WITHSTAND LOADING TO PROPER LOAD CLASS AS OUTLINED BY EN 1433. GRATE TYPE SHALL BE APPROPRIATE TO MEET THE SYSTEM LOAD CLASS SPECIFIED AND INTENDED APPLICATION. GRATES SHALL BE SECURED USING 'DRAINLOK' BOLTLESS LOCKING SYSTEM. CHANNEL AND GRATE SHALL BE CERTIFIED TO MEET THE SPECIFIED EN 1433 LOAD CLASS. THE SYSTEM SHALL BE INSTALLED IN ACCORDANCE WITH THE MANUFACTURER'S INSTRUCTIONS AND RECOMMENDATIONS.

K1D-A-EPP | DATE: 08/17/16

K100 - KLASSIKDRAIN - LOAD CLASS: A
Exposed Paver Pavement
INSTALLATION DRAWING - ACO DRAIN

ACO Polymer Products, Inc.

825 W. Beechcraft St	9470 Pinecone Dr.	4211 Pleasant Rd.
Casa Grande, AZ 85122	Mentor, OH 44060	Fort Mill, SC 29708
Tel: 520-421-9988	Tel: 440-639-7230	Tel: 440-639-7230
Fax: 520-421-9899	Fax: 440-639-7235	Fax: 803-802-1063

Arizona Tel: 888-490-9552 e-mail: sales@acousa.com Ohio Tel: 800-543-4764 www.acousa.com South Carolina Tel: 800-543-4764

R:\22119 MCGRAY HERBERT STREET PROPERTY – P.O\FINAL ENGINEERING PLANS\CADDWGS\22119-DET.DWG – PRINTED 5/31/2023 9:04 AM

ZEV COHEN & ASSOCIATES, INC.
300 INTERCHANGE BLVD., STE. C
ORMOND BEACH, FL 32174
WWW.ZEVCOHEN.COM

CIVIL ENGINEERING
LANDSCAPE ARCHITECTURE
ENVIRONMENTAL
PLANNING
TRANSPORTATION
(EB 4516) (LC 62)

NO.	DATE	BY	SUBMITTALS / REVISIONS
1	03-24-23	MT	REVISED PER CITY COMMENTS
2	04-24-23	MT	REVISED PER CITY AND DISTRICT COMMENTS
3	05-26-23	SA	REVISED PER CITY COMMENTS

COASTAL OAKS
FINAL ENGINEERING PLANS
CONSTRUCTION DETAILS

CITY OF PORT ORANGE VOLUSIA COUNTY, FLORIDA

PROJECT NO: ZC 22119
DESIGNED BY: BB
DRAFTED BY: MT
CHECKED BY: BB
DRAWING FILE: 22119-DET

ROBERT J. BALL LICENSE No PE60001 STATE OF FLORIDA PROFESSIONAL ENGINEER

Digitally signed by Robert J Ball
DN: CN=Robert J Ball, dnQualifier=A01410D000000184CE569AA8000AC4E9, O=ZEV COHEN AND ASSOCIATES INC., C=US
Date: 2023.05.31 09:21:37-04'00'

ROBERT J. BALL, P.E., NO.60001
NOT VALID WITHOUT SEAL

SHEET: C15 OF 15

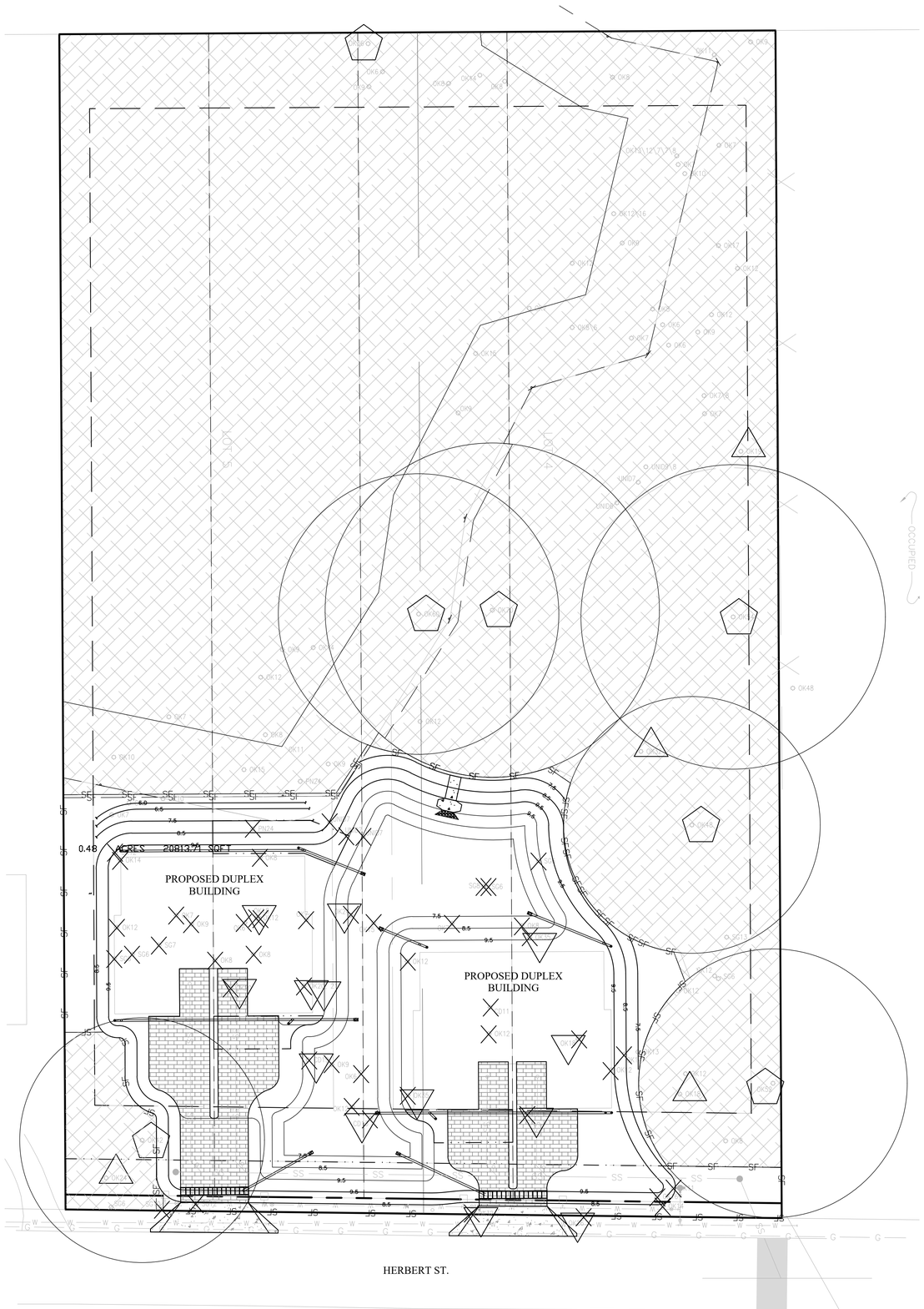

Section C: Mitigation for healthy Specimen trees

Qty. for removal	Size	# Replacement Trees	Subtotal		
2	12-16"	2	4	or	$ 1,357.56
7	17-24"	3	21	or	$ 7,127.19
2	25-32"	4	8	or	$ 2,715.12
2	33-40"	5	10	or	$ 3,393.90
	41"+	6	0	or	$ -
	Total Replacement Trees =		43		$ 14,593.77

Replacement trees shall be minimum (4") four-inch caliper, 14 feet high

* REPLACEMENT SHALL BE MET BY EXISTING TREE TO BE PRESERVED (72)

TREE LEGEND

CD	CEDAR TREE
OK	LIVE OAK TREE
SG	SWEET GUM TREE
UNID	UNIDENTIFIED TREE

15% NATURAL PRESERVATION

TOTAL SITE ACREAGE	2.18 AC
TOTAL PRESERVATION AREA REQUIRED (CALCULATION: 2.18 AC. x 15% = .33 AC.	.33 AC.
UNDISTURBED NATURAL PRESERVATION AREA	1.56 AC

LEGEND

- EXISTING TREE TO REMAIN
- EXISTING TREE TO BE REMOVED
- EXISTING SPECIMEN TREE TO REMAIN
- EXISTING SPECIMEN TREE TO BE REMOVED
- EXISTING HISTORIC TREE TO REMAIN
- EXISTING HISTORIC TREE TO BE REMOVED
- DENOTES ROOT ZONE PROTECTION AREA REQUIRED
- DENOTES NATURAL PRESERVATION / CONSERVATION AREA TO REMAIN

MINIMUM ON SITE TREE

TOTAL SITE ACREAGE	2.18 AC.
MINIMUM NUMBER OF TREES REQUIRED CALCULATION: 95,026 S.F. / 2,500 S.F. = 38	38
EXISTING TREES TO REMAIN	72

NOTE:

LOT 1 IS REQUIRED A MINIMUM 13 TREES PER LOT
LOT 2 IS REQUIRED A MINIMUM 8 SHADE TREES PER LOT
LOT 3 IS REQUIRED A MINIMUM 8 SHADE TREES PER LOT
LOT 4 IS REQUIRED A MINIMUM 8 SHADE TREES PER LOT

SPECIMEN TREE REQUIREMENTS

TOTAL SITE ACREAGE	2.18 AC.
SPECIMEN TREES ON SITE	*23
SPECIMEN TREES PER ACRE	10.5
SPECIMEN TREES REQUIRED TO BE PRESERVED	9
(CALCULATION: 23 TREES x 4/AC = 9 TREES) SEE TABLE BELOW	
SPECIMEN TREES PRESERVED	11

* INCLUDES HISTORIC TREES

PROTECTIONS AREA SHALL BE ENTIRE DRIP LINE OR ONE (1) FOOT RADIUS PER INCH OF DIAMETER, WHICHEVER IS GREATER

SPECIMEN TREES PER ACRE	EXISTING SPECIMEN TREES TO BE PRESERVED
LESS THAN 1	80%
3.0-5.0	55%
5.1-8.0	50%
8.1 OR MORE	10 PER ACRE

SHRUBS REQUIRED PER LOT:

LOT 1 IS REQUIRED 20 SHRUBS
LOT 2 IS REQUIRED 12 SHRUBS
LOT 3 IS REQUIRED 12 SHRUBS
LOT 4 IS REQUIRED 12 SHRUBS

ZEV COHEN & ASSOCIATES, INC.
300 INTERCHANGE BLVD., STE. C
DAYTONA BEACH, FL 32114
WWW.ZEVCOHEN.COM

CIVIL ENGINEERING
LANDSCAPE ARCHITECTURE
ENVIRONMENTAL
PLANNING
TRANSPORTATION
(EB 6516) (LC 42)

NO.	DATE	BY	SUBMITTALS / REVISIONS
1	03-24-23	MT	REVISED PER CITY COMMENTS
2	04-24-23	MT	REVISED PER CITY AND DISTRICT COMMENTS
3	05-26-23	SA	REVISED PER CITY COMMENTS

COASTAL OAKS
FINAL ENGINEERING PLANS
TREE PROTECTION PLAN & DETAILS

CITY OF PORT ORANGE
VOLUSIA COUNTY, FLORIDA

PROJECT NO: ZC 22119
DESIGNED BY: SMG
DRAFTED BY: SMG
CHECKED BY: JES

DRAWING FILE: 22119-TP
XREF'S: 22119-BASE.DWG
XREF'S: 22119-SURV.DWG

JAKE STEHR, RLA, NO. 6667462
NOT VALID WITHOUT SEAL

SHEET: TP1 OF 1

J:\22119 MCCRAY HERBERT STREET PROPERTY - P.O.D\FINAL ENGINEERING PLANS\CAD\DWGS\22119-TP.DWG - PRINTED 5/31/2023 11:13 AM

EXHIBIT B

VOLUSIA COUNTY SCHOOLS

Carmen J. Balgobin, Ed.D
Superintendent of Schools

School Board of Volusia County

Ms. Jamie M. Haynes, Chairman
Mrs. Anita Burnette, Vice Chairman
Mr. Ruben Colón
Mr. Carl Persis
Mrs. Jessie Thompson

February 9, 2023

Mr. Robert Ball, P.E.
Zev Cohen & Associates, Inc
300 Interchange Blvd, Suite C
Ormond Beach, FL 32174

RE : Coastal Oaks – City of Port Orange
School Capacity Review # 23-01-13-001-X

Dear Mr. Ball:

The school district reviewed the information submitted for the 2.18 +/- acre parcel located at or near the intersection of Herbert St and 5th St within Port Orange city limits. The information provided in the school capacity application for the project known as Coastal Oaks indicates a total of four (4) multi-family townhome units.

Pursuant to the First Amendment to the Interlocal Agreement for Public School Facility Planning in effect since July 1, 2007, a subdivision of equal to or less than ten (10) lots receives an exemption status from school concurrency. Regardless of the exemption status, all residential projects must be reported to the school district for inclusion in the School Concurrency Management System. Thank you for submitting as required.

Should you need additional information, please contact me at (386) 947-8786 ext. 50709.

Sincerely,

Stephanie B. Doster
Coordinator, Planning

CC: Carmen J. Balgobin, Ed.D, Superintendent of Schools
Ron Young, Director of Planning & Construction
Gwen Perney, Principal Planner, City of Port Orange
Lisa V. Divina, VCSB Planning Services Project File

FACILITIES SERVICES
3750 OLSON DRIVE • DAYTONA BEACH, FL 32124
PHONE: (386) 947-8786 • FAX (386) 506-5056

An Equal Opportunity Employer

VCSB Schools Impacted by Development

School Concurrency Review - Coastal Oaks

VOLUSIA COUNTY SCHOOLS
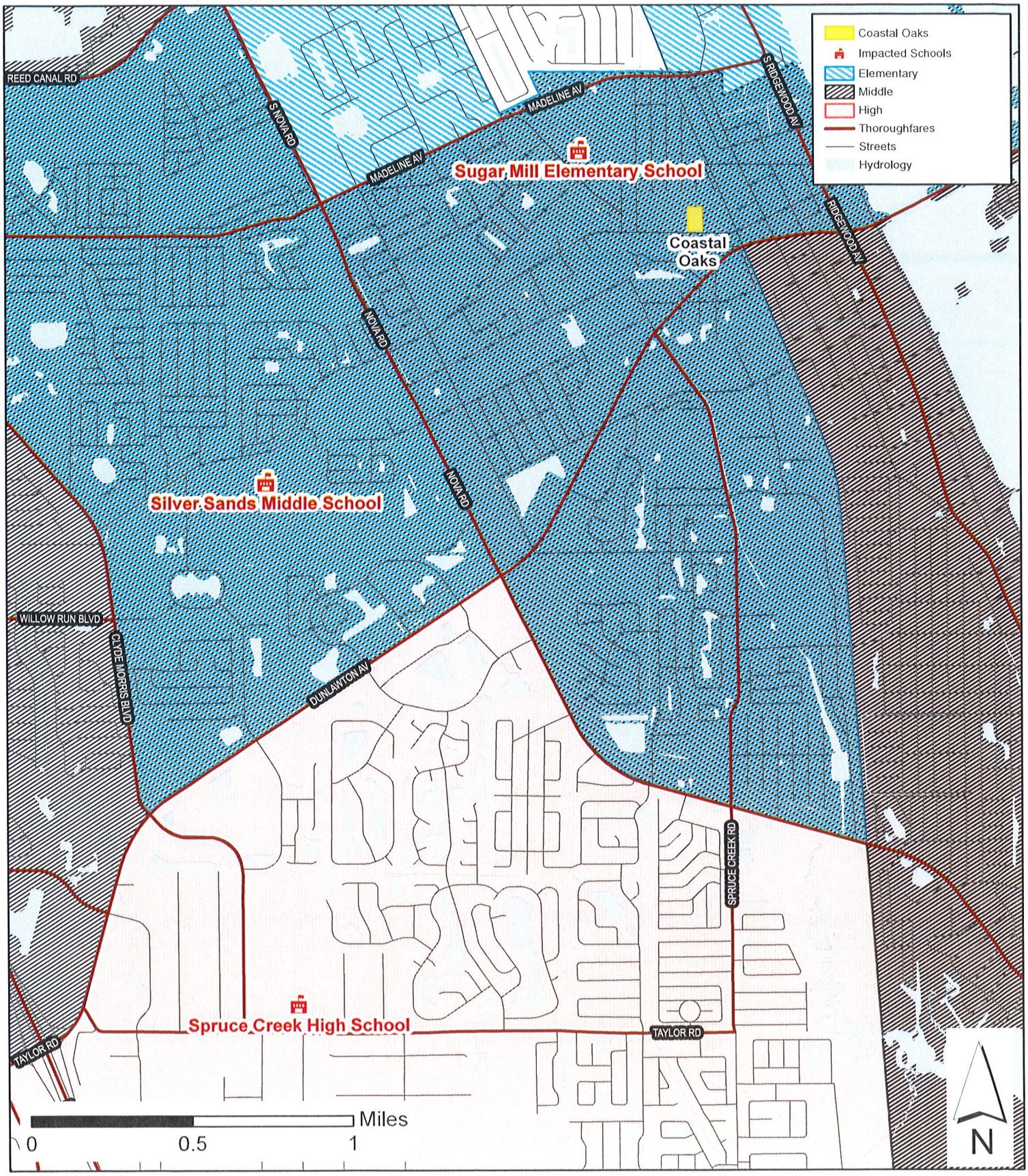
Created by Facilities Planning Service
January 2023