REGULAR CITY COUNCIL MEETING

6:30 PM – COUNCIL CHAMBERS – CITY HALL

SEPTEMBER 20, 2022

AGENDA

ALL CITIZENS DESIRING TO ADDRESS THE PORT ORANGE CITY COUNCIL DURING PUBLIC PARTICIPATION SHOULD COMPLETE THE FORM WHICH IS LOCATED ON THE STANDS OUTSIDE THE COUNCIL CHAMBERS. AFTER COMPLETING THE FORM, PRESENT IT TO THE CITY CLERK.

A. OPENING

1. Invocation by Pastor Kari Niedermaier of All Saints Lutheran Church
2. Pledge of Allegiance
3. Roll Call

B. PROCLAMATIONS

4. Childhood Cancer Awareness Month

C. CONSENT AGENDA

5. Public Comments on Consent Agenda Items Only
6. Agenda Approval
7. Approval of Minutes
    a. September 6, 2022 - Regular City Council Meeting
    b. September 7, 2022 - Special City Council Meeting
8. Bid Awards and Contract Items
    a. Approval of Amendment and Renewal No. 2 with G&G Outdoors, LLC for the Standard Contract for Services (CA7285) relating to the City Landscape Maintenance Services for the Police Shooting Range
    b. Approval of Amendment No. 2 to the Standard Contract for Services with Sparks Concrete, LLC (CA6825) under ITB #19-02 Concrete Installation, Repairs, and Replacement

c. Approval of Change Order No. 1 to Standard Contract for Services (CA7244) with Kimley Horn & Associates for RFSQ 20-02, 20-Inch Force Main River Crossing Design

d. Approval of Task Authorization No. 1 under the Master Contract for Professional Engineering Services CA7763 to Zev Cohen and Associates, Inc for services relating to the Design and Bidding Assistance for the City Center Exterior Improvement Project.

e. Approval of Task Authorization No. 2 with Zev Cohen & Associates, Inc. under the Master Contract for Professional Engineering Services (CA7763) for Jackson St. and Oak St. Stormwater Improvements Design and Bidding Assistance Services

f. Approval of Amendment No. 2 & Renewal No. 1 with VerdeGo LLC (CA6897) for - Major Thoroughfare Landscaping Maintenance (ITB 19-18)

g. Approval of Change Order No. 2 to Brightly Software Inc. (Formerly Dude Solutions, Inc.) Piggyback Agreement for Community Development Permit Software Project (Smartgov)

h. Approval of one-month extension to the Annual Service and Trap Neuter Release (TNR) Agreement with Halifax Humane Society (HHS)

i. Approval to Renew the City's Property and Casualty Insurance / Loss Control and Prevention Services

9. Resolution No. 22-27- Partial Utility Easement Vacation at Lot 24, Brandy Hills Unit 1 Subdivision (24 Tula Drive)

10. FY 2022 Utility Billing and Accounts Receivable Accounting Adjustment

11. Approval of Proportionate Fair-Share Agreement for Shoppes at Summer Trees Site Plan (Case No. 22-800000001)

D. PUBLIC PARTICIPATION (Non-Agenda – 20 minutes)

E. COUNCIL COMMENTS

12. Comments/Concerns from Council Members

F. BOARD APPOINTMENTS, INTERVIEWS, AND REPORTS

13. Citizen Advisory Committee for TPO

G. PUBLIC HEARING

14. Second Reading - Ordinance No. 2022-23 - Prohibiting Smoking and Vaping in City Parks

15. First Reading – Ordinance No. 2022-24 - Rezoning/904 Taylor Road (Case No. 22-60000005)

H. ADDITIONAL ITEMS

16. City Attorney
17. City Manager

I. COUNCIL COMMITTEE REPORTS

18. City Council Committee Reports
    a. First Step Shelter - Council Member Chase Tramont
    b. ArtHaus - Council Member Chase Tramont
    c. Port Orange/South Daytona Chamber of Commerce - Mayor Don Burnette
    d. Roundtable of Elected Officials - Mayor Don Burnette
    e. Fire Pension Plan - Council Member Reed Foley

J. ADJOURNMENT

NOTICES – PURSUANT TO SECTION 286.0105 OF THE FLORIDA STATUTES, IF ANY PERSON DECIDES TO APPEAL ANY DECISION MADE BY THE CITY COUNCIL WITH RESPECT TO ANY MATTER CONSIDERED AT THIS PUBLIC MEETING OR HEARING, SUCH PERSON WILL NEED A RECORD OF THE PROCEEDINGS, AND THAT, FOR SUCH PURPOSE, SUCH PERSON MAY NEED TO ENSURE THAT A VERBATIM RECORD OF THE PROCEEDINGS IS MADE, WHICH RECORD INCLUDES THE TESTIMONY AND EVIDENCE UPON WHICH THE APPEAL IS TO BE BASED. THE CITY DOES NOT PREPARE OR PROVIDE SUCH A RECORD.

FOR SPECIAL ACCOMMODATIONS, PLEASE NOTIFY THE CITY CLERK'S OFFICE (PHONE: 386-506-5563) AS FAR IN ADVANCE AS POSSIBLE, BUT PREFERABLY WITHIN 2 WORKING DAYS OF YOUR RECEIPT OF THIS NOTICE OR 5 DAYS PRIOR TO THE MEETING OR HEARING DATE.

HELP FOR THE HEARING IMPAIRED IS AVAILABLE THROUGH THE ASSISTIVE LISTENING SYSTEM RECEIVERS CAN BE OBTAINED FROM THE CITY CLERKS' OFFICE.

IN ACCORDANCE WITH THE AMERICANS WITH DISABILITIES ACT (ADA), IF YOU ARE A PERSON WITH A DISABILITY WHO NEEDS AN ACCOMMODATION IN ORDER TO PARTICIPATE IN THIS PROCEEDING, YOU ARE ENTITLED, AT NO COST TO YOU, THE PROVISION OF CERTAIN ASSISTANCE. PLEASE CONTACT THE CITY CLERK FOR THE CITY OF PORT ORANGE, 1000 CITY CENTER CIRCLE, PORT ORANGE, FLORIDA 32129, TELEPHONE NUMBER 386-506-5563, CITYCLERK@PORT-ORANGE.ORG, AS FAR IN ADVANCE AS POSSIBLE, BUT PREFERABLY WITHIN 2 WORKING DAYS OF YOUR RECEIPT OF THIS NOTICE OR 5 DAYS PRIOR TO THE MEETING OR HEARING DATE. IF YOU ARE HEARING OR VOICE IMPAIRED, CONTACT THE RELAY OPERATOR AT 7-1-1 or 1-800-955-8771.

UPON REQUEST BY A QUALIFIED INDIVIDUAL WITH A DISABILITY, THIS DOCUMENT WILL BE MADE AVAILABLE IN AN ALTERNATE FORMAT. IF YOU NEED TO REQUEST THIS DOCUMENT IN AN ALTERNATE FORMAT, PLEASE CONTACT THE CITY CLERK WHOSE CONTACT INFORMATION IS PROVIDED ABOVE.

ANY INVOCATION THAT IS OFFERED BEFORE THE OFFICIAL START OF THE CITY COUNCIL MEETING SHALL BE THE VOLUNTARY OFFERING OF A PRIVATE PERSON, TO AND FOR THE BENEFIT OF THE CITY COUNCIL. THE VIEWS OR BELIEFS EXPRESSED BY THE INVOCATION SPEAKER HAVE NOT BEEN PREVIOUSLY REVIEWED OR APPROVED BY THE CITY COUNCIL OR THE CITY STAFF, AND THE CITY IS NOT ALLOWED BY LAW TO ENDORSE THE RELIGIOUS BELIEFS OR VIEWS OF THIS, OR ANY OTHER SPEAKER. PERSONS IN ATTENDANCE AT THE CITY COUNCIL MEETING ARE INVITED TO STAND DURING THE OPENING INVOCATION AND PLEDGE OF ALLEGIANCE. HOWEVER, SUCH INVITATION SHALL NOT BE CONSTRUED AS A DEMAND, ORDER, OR ANY OTHER TYPE OF COMMAND. NO PERSON IN ATTENDANCE AT THE MEETING SHALL BE REQUIRED TO PARTICIPATE IN ANY OPENING INVOCATION THAT IS OFFERED. A PERSON MAY EXIT THE CITY COUNCIL CHAMBERS AND RETURN UPON COMPLETION OF THE OPENING INVOCATION IF A PERSON DOES NOT WISH TO PARTICIPATE IN OR WITNESS THE OPENING INVOCATION.

REGULAR CITY COUNCIL MEETING MINUTES
COUNCIL CHAMBERS – CITY HALL
1000 CITY CENTER CIRCLE
PORT ORANGE, FLORIDA
SEPTEMBER 6, 2022

THE REGULAR CITY COUNCIL MEETING of the City of Port Orange was called to order by Mayor Donald O. Burnette at 6:33 p.m.

Silent Invocation

Pledge of Allegiance

Roll Call	Present:	Council Member Reed Foley Council Member Chase Tramont Council Member Drew Bastian Vice Mayor Scott Stiltner Mayor Donald Burnette
	Also Present:	City Manager Wayne Clark City Attorney Matthew Jones City Clerk Robin Fenwick

CONSENT AGENDA

4. Public Comments on Consent Agenda Items Only

There were none.

5. Agenda Approval

Council Member Reed Foley asked to pull Item #10 for further discussion.

> Motion to approve the agenda as amended was made by Vice Mayor Scott Stiltner and Seconded by Council Member Chase Tramont. Motion carried unanimously by voice vote.

6. Approval of Minutes
   a. August 16, 2022 - Regular City Council Meeting
7. Bid Awards and Contract Items
   a. Ratification of the Emergency Request to Repair two (2) Aurora Vertical Turbine Pumps to Barney's Pumps, Inc.
   b. Approval of the ArtHaus License Agreement
   c. Approval of Amendment No 4 and Extension with Scotty Boy Landscaping and Maintenance, LLC (CA6626) relating to Facility Landscape Maintenance Services
   d. Approval of Additional Time Contingency for the REC Center Project

e. Approval of Contracts for RFP #22-12 - Building Inspection and Plan Review Services with ECS Florida, LLC and Universal Engineering Sciences, Inc.

8. Collaborative Solutions, LLC
   a. Approval of Statement of Work (SOW) #4 for Workday Lean On Services with Collaborative Solutions, LLC
   b. Approval of Statement of Work (SOW) #5 for Workday Staff Augmentation with Collaborative Solutions, LLC
9. Resolution No. 22-4 - Approving the grant agreement and accepting the award in the amount of $383,834 from the U.S. Department of Housing and Urban Development (HUD) Community Development Block Grant (CDBG) for Program Year 2020 (PY20).
10. Resolution No. 22-24 - Parks and Recreation Fees at the REC
11. Approval of Interlocal Agreement with Volusia County for Traffic Signal Maintenance
12. Amended Grant Award Agreement with Florida Communities Trust (FCT) for a portion of Riverwalk Park Property and the accompanying Release of Grant Award Agreement for the Marcantonio Property

Motion to approve the Consent Agenda as amended was made by Vice Mayor Scott Stiltner and Seconded by Council Member Chase Tramont. Motion carried unanimously by roll call vote.

Item #10 - Resolution No. 22-24 - Parks and Recreation Fees at the REC

Motion to approve was made by Vice Mayor Scott Stiltner and Seconded by Council Member Chase Tramont.

Council Member Reed Foley asked why we have a 30% cost recovery. Wayne Clark, City Manager, advised it is a Council policy to collect 30% of the total costs for Parks & Recreation Department. Susan Lovallo, Parks & Recreation, explained the direction from Council vs. the direct costs recovered currently and discussed the fee changes included in the resolution. Council Member Reed Foley asked Council if they still support the 30% cost recovery direction. He supports the item but wants to discuss the policy in the future.

Motion carried unanimously by roll call vote.

PUBLIC PARTICIPATION (Non-Agenda – 20 minutes)

Ted Noftall, citizen, spoke regarding his candidacy.

COUNCIL COMMENTS

13. Comments/Concerns from Council Members

Council Member Drew Bastian asked that Code Enforcement look at the Pavilion for violations that have been reported to him.

Vice Mayor Scott Stiltner spoke regarding Port Orange being ranked #1 best city to retire to on a $3,000 a month income or less and thanked Allen Green for his service. Former Mayor Allen Green was recognized as a Wall of Honor recipient earlier tonight. Mayor Don Burnette and Council Member Chase Tramont thanked Allen Green for his service.

Council Member Reed Foley thanked Allen Green for his service, as well as the Parks & Recreation Department Staff for following through with the sunscreen samples at four of the City's parks.

PUBLIC HEARING

14. Second Reading - Ordinance No. 2022-21 - Eighth Amendment to the Master Development Agreement for the Crystal Lake Planned Unit Development (Case No. 22-40000002)

Mayor Don Burnette read Ordinance No. 2022-21.

ORDINANCE NO. 2022-21

AN ORDINANCE OF THE CITY OF PORT ORANGE, VOLUSIA COUNTY, FLORIDA, APPROVING THE EIGHTH AMENDMENT TO THE MASTER DEVELOPMENT AGREEMENT FOR CRYSTAL LAKE PLANNED UNIT DEVELOPMENT (PUD); PROVIDING FOR THE REPEAL OF CONFLICTING ORDINANCES; PROVIDING FOR SEVERABILITY OF; AND PROVIDING AN EFFECTIVE DATE.

Motion to adopt Ordinance No. 2022-21 was made by Vice Mayor Scott Stiltner and Seconded by Council Member Chase Tramont. Motion carried unanimously by roll call vote.

15. Second Reading - Ordinance No. 2022-22 - LDC Amendment/Chapter 2 & Chapter 5 (Case No. 22-25000005)

Mayor Don Burnette read Ordinance No. 2022-22.

ORDINANCE NO. 2022-22

AN ORDINANCE OF THE CITY OF PORT ORANGE, VOLUSIA COUNTY, FLORIDA AMENDING THE LAND DEVELOPMENT CODE CHAPTERS 2 AND 5 TO PROVIDE DEFINITIONS FOR SPECULATIVE AND MODEL HOMES; UPDATE REQUIREMENTS FOR MODEL HOMES; CREATE PROVISIONS FOR THE DEVELOPMENT OF SPECULATIVE HOMES IN ORDER TO ALLOW THE CONSTRUCTION THEREOF PRIOR TO PLATTING IN AID OF MORE TIMELY DELIVERY OF HOMES AFTER PLATTING IS COMPLETE; PROVIDING FOR REPEAL OF CONFLICTING ORDINANCES; PROVIDING FOR SEVERABILITY; AND PROVIDING AN EFFECTIVE DATE.

Motion to adopt Ordinance No. 2022-22 was made by Vice Mayor Scott Stiltner and Seconded by Council Member Chase Tramont. Motion carried unanimously by roll call vote.

REGULAR AGENDA

16. First Reading - Ordinance No. 2022-23 - Prohibiting Smoking in City Parks

Mayor Don Burnette read Ordinance No. 2022-23.

ORDINANCE NO. 2022-23

AN ORDINANCE OF THE CITY OF PORT ORANGE, VOLUSIA COUNTY, FLORIDA, AMENDING CHAPTER 50 OF THE CODE OF ORDINANCES, TO ESTABLISH SECTION 50-40, PROHIBITING SMOKING OF TOBACCO IN PARKS; PROVIDING FOR EXCEPTIONS; PROVIDING FOR CODIFICATION; PROVIDING FOR REPEAL OF CONFLICTING ORDINANCES; PROVIDING FOR SEVERABILITY; AND PROVIDING AN EFFECTIVE DATE.

Council Member Drew Bastian asked if vaping is included in the prohibition. Matt Jones, City Attorney, asked that the item be tabled to allow him time to research whether or not vaping can be included.

Motion to table until September 20, 2022 was made by Council Member Drew Bastian and Seconded by Council Member Chase Tramont. Motion carried unanimously by voice vote.

During the City Attorney item, Mr. Jones advised he was able to complete the research relating to vaping in parks. He suggested pulling the item from the table and voting on it

to include the prohibition of smoking *and vaping* in the City's parks.

Motion to remove Item #16 from the table was made by Council Member Reed Foley and Seconded by Council Member Drew Bastian.

Mayor Don Burnette re-read Ordinance No. 2022-23

Motion to amend the original motion to include no vaping in Ordinance No. 2022-23 was made by Council Member Chase Tramont and Seconded by Council Member Drew Bastian. Motion carried unanimously by roll call vote.

Motion to approve Ordinance No. 2022-23 as amended to include a prohibition on vaping carried unanimously by roll call vote.

17. Accept the Donation of a Caboose for Depot Park

Motion to approve and accept the donation of the caboose for Depot Park, subject to a donation agreement reviewed and approved by the City Manager and City Attorney, and authorize the City Manager and City Clerk to execute said agreement, and to authorize the City Manager and City Clerk to execute a license agreement on behalf of the City for the purpose of allowing the railway society to perform restoration work on city property was made by Council Member Drew Bastian and Seconded by Vice Mayor Scott Stiltner.

Ms. Lovallo spoke regarding the details of the donation and what's included in the City's responsibilities.

Larry Powers, Port Orange Railroad Society President, spoke regarding the details of the project.

Motion carried unanimously by roll call vote.

ADDITIONAL ITEMS

18. Discussion of City Manager and City Attorney Compensation

Mayor Don Burnette opened the discussion with a recap of the previous discussion held by Council and suggested a 5% increase.

Motion to approve a 5% increase for the City Attorney and City Manager effective October 1, 2022 was made by Council Member Drew Bastian and Seconded by Vice Mayor Scott Stiltner. Motion carried unanimously by roll call vote.

19. City Attorney

Mr. Jones had nothing further.

20. City Manager

There was nothing further from Mr. Clark.

COUNCIL COMMITTEE REPORTS

21. City Council Committee Reports
    a. River to Sea TPO - Council Member Reed Foley provided an update.
    b. Police Pension Plan - Council Member Drew Bastian provided an update.
    c. Fire Pension Plan - Council Member Reed Foley was unable to attend but will get the minutes and provide an update on September 20, 2022.

ADJOURNMENT - 7:35 p.m.

_____
Mayor Donald O. Burnette

Attest:

_____
Robin Fenwick, MMC
City Clerk

SPECIAL CITY COUNCIL MEETING MINUTES
COUNCIL CHAMBERS – CITY HALL
1000 CITY CENTER CIRCLE
PORT ORANGE, FLORIDA
SEPTEMBER 7, 2022

THE SPECIAL CITY COUNCIL MEETING of the City of Port Orange was called to order by Mayor Donald O. Burnette at 5:30 p.m.

Silent Invocation

Pledge of Allegiance

Roll Call	Present:	Council Member Reed Foley Council Member Chase Tramont Council Member Drew Bastian Vice Mayor Scott Stiltner Mayor Donald Burnette
	Also Present:	City Manager Wayne Clark City Attorney Matthew Jones City Clerk Robin Fenwick

DISCUSSION / ACTION

4. Discussion on Tentative City Millage and Tentative City Budget for FY 2023

Mayor Don Burnette announced the public hearing is now convened to discuss the millage and budget. The Fiscal Year (FY) 2023 Budget commences on October 1, 2022 and continues through September 30, 2023. We will begin with the City of Port Orange City Council discussion of the tentative millage necessary to fund the FY2023 tentative budget for the City of Port Orange. The City of Port Orange is the taxing authority and the current year taxable value for operating purposes is $4,513,302,821. The rolled-back millage rate is $4.4557 mills per $1,000 of valuation. The staff recommended millage rate is $4.8610 mills per $1,000 of valuation which represents a 9.10% increase in ad valorem tax revenues above the rolled-back rate.

Mayor Don Burnette asked the City Manager to comment on the increase in the millage rate and the specific purposes for the increase.

Wayne Clark, City Manager, discussed the increases in expenses over last year, the projects to be completed this year, and contractual obligations for employees, services and other vendors.

Mayor Don Burnette asked Council to discuss the proposed millage rate and budget.

Council Member Drew Bastian and Vice Mayor Scott Stiltner spoke regarding their

understanding of the need to fund the commitments they've made, as well as cover the increases in expenses over the last year. Mayor Don Burnette also discussed the research he's done comparing Port Orange to surrounding cities regarding wages and tax rates.

Mayor Don Burnette asked for public comment. There was none.

Council will now review the tentative budget and discuss revisions, if any. This budget includes all operating and capital costs for FY 2023. This budget includes the General, Special Revenue, Debt Service, Capital, Enterprise, and Internal Service Funds. The proposed City-wide FY 2023 budget for all funds is $161,305,469. There were no changes to the proposed millage rate and budget requested by Council.

5. Resolution No. 22-25 - Adopting the Tentative Millage Rate for FY 2022-2023

Mayor Don Burnette read Resolution No. 22-25

RESOLUTION NO. 22-25

A RESOLUTION OF THE CITY COUNCIL OF THE CITY OF PORT ORANGE, VOLUSIA COUNTY, FLORIDA; ADOPTING THE TENTATIVE AD VALOREM PROPERTY TAX MILLAGE RATES TO BE LEVIED FOR FISCAL YEAR 2023 (OCTOBER 1, 2022 TO SEPTEMBER 30, 2023); PROVIDING FOR SCRIVENER'S ERRORS: AND PROVIDING AN EFFECTIVE DATE.

Move to approve Resolution No. 22-25 adopting the City of Port Orange FY2023 tentative millage rate of 4.8610 mills per $1,000.00 of valuation was made by Vice Mayor Scott Stiltner and Seconded by Council Member Drew Bastian. Motion carried 3-2 with Council Members Reed Foley and Chase Tramont voting no.

Mayor Don Burnette announced the adopted tentative millage rate of 4.8610 mills per $1,000.00 of valuation is a 9.10% increase in ad valorem tax revenues above the rolled-back rate.

6. Resolution No. 22-26 - Adopting the Tentative Budget for FY 2022-2023

Mayor Don Burnette read Resolution No. 22-26.

RESOLUTION NO. 22-26

A RESOLUTION OF THE CITY COUNCIL OF THE CITY OF PORT ORANGE, VOLUSIA COUNTY, FLORIDA; ADOPTING THE TENTATIVE BUDGET FOR FISCAL YEAR 2023 (OCTOBER 1, 2022 TO SEPTEMBER 30, 2023) FOR THE CITY OF PORT ORANGE; PROVIDING FOR APPROPRIATION AND PROCEDURES; PROVIDING FOR SCRIVENER'S ERRORS; AND PROVIDING AN EFFECTIVE DATE.

Motion to Approve Resolution No. 22-26 adopting the City of Port Orange FY2023 tentative budget was made by Vice Mayor Scott Stiltner and Seconded by Council Member Drew Bastian. Motion carried 3-2 with Council Members Reed Foley and Chase Tramont voting no.

Mayor Don Burnette announced in addition to the foregoing tentative budget/millage levy, there is a voter-approved millage levy of 0.2100 mills necessary to fund the debt service payments on the 2006 general obligation bonds for public safety capital facilities which were refunded in 2016. A Public Hearing will be held on September 21, 2022, at 5:30 p.m. in City Council Chambers at City Hall, 1000 City Center Circle, Port Orange, Florida, to discuss and adopt a final millage rate and the final budget for FY2023 for the City of Port Orange.

ADJOURNMENT – 5:49 p.m.

_____
Mayor Donald O. Burnette

Attest:

_____
Robin Fenwick, MMC
City Clerk

CITY COUNCIL AGENDA ITEM

COUNCIL MEETING DATE 9/20/2022

SUBJECT: (C8a) Approval of Amendment and Renewal No. 2 with G&G Outdoors, LLC for the Standard Contract for Services (CA7285) relating to the City Landscape Maintenance Services for the Police Shooting Range

DEPARTMENT: Public Works

GOAL: 2 - Infrastructure

RECOMMENDED MOTION: Move to approve Amendment and Renewal No. 2 with G&G Outdoors, LLC for the Standard Contract for Services (CA7285) relating to the City Landscape Maintenance Services for the Police Shooting Range

SUMMARY: On October 21, 2020, the City entered into a Standard Contract for Services with G&G Outdoors LLC (CA7285) for the Landscape Maintenance Services for the Police Shooting Range as outlined under ITB 20-17. The initial term for the Standard Contract for Services was set to expire on October 22, 2021. On November 1, 2021, the City Manager approved Amendment & Renewal No 1. This amendment removed the payment and performance bond requirement, changed the contract administrator to Public Works, and exercised the first of three (3) renewal options. That contract term expires on October 20, 2022.

G&G Outdoors, LLC has requested a price increase for the upcoming renewal. The request is based on the increased cost of fertilizer, herbicides, and fuel. The increase is $6,800 for a revised contract amount of $29,200 for the term of October 10/21/2022 through October 20, 2023.

Staff is satisfied with the performance of G&G Outdoors LLC and recommends the contract be renewed for a one-year term effective October 21, 2022 through October 20, 2023 and has verified the price increases requested.

PRESENTER: Lynn Stevens

ATTACHMENTS:

1.	GG Outdoors LLC Amendment and Renewal No. 2	GG Outdoors LLC Amendment and Renewal No. 2.pdf
2.	Justification Memo Amend and Renew G&G Outdoors landscape maint police	Justification Memo Amend and Renew G&G Outdoors landscape maint police

	shooting range (2)	shooting range (2).docx
3.	EXECUTED CA7285 Amendment and Renewal No 1 G&G Outdoors police shooting range	EXECUTED CA7285 Amendment and Renewal No 1 G&G Outdoors police shooting range.pdf
4.	G&G Outdoor Price Increase	G&G Outdoor Price Increase.pdf
5.	G&G Outdoors PD Shooting Range Contract	G&G Outdoors PD Shooting Range Contract.pdf
6.	G&G Outdoor GL 6.23.22 WC 9.21.22	G&G Outdoor GL 6.23.22 WC 9.21.22.pdf
7.	G&G Outdoor for Hunt Club GL 12.01.22	G&G Outdoor for Hunt Club GL 12.01.22.pdf

Julia Wiggins	Created/Initiated - 8/25/2022
Kelly Klausky	Approved - 8/25/2022
Julia Wiggins	Approved - 8/25/2022
Richard Colby	Approved - 8/25/2022
Tom DiEulio	Approved - 8/26/2022
Ronny Buttrum	Approved - 8/26/2022
Lynn Stevens	Approved - 8/26/2022
John McKinney	Approved - 8/31/2022
Matthew Jones	Approved - 9/7/2022
Wayne Clark	Approved - 9/8/2022
Robin Fenwick	Final Approval - 9/8/2022

AMENDMENT AND RENEWAL NO. 2
TO STANDARD CONTRACT FOR SERVICES DATED October 21, 2020

THIS AMENDMENT AND RENEWAL NO. 2 ("2022 Amendment and Renewal") is made and entered into the day and year set forth hereinafter by and between the **CITY OF PORT ORANGE, FLORIDA**, a Florida municipal corporation located at 1000 City Center Circle, Port Orange, Volusia County, Florida 32129-4144 (the "City"), and **G&G OUTDOORS, LLC** ("Contractor"), a Florida limited liability corporation, whose principal address is 4059 Quail Nest Lane, New Smyrna Beach, Florida 32168. The City and the Contractor are collectively referred to herein as the "Parties."

WHEREAS, on the 21st day of October 2020, Contractor entered into Contract ("Contract"), pursuant to Intent to Bid Number 20-17 ("ITB 20-17") City Landscape Maintenance Services for the Police Shooting Range, for an initial term of two (2) years, with provisions for three (3) one-year renewals upon written agreement of the Parties, and subject to review and approval by the City Manager; and

WHEREAS, on the 1st day of November 2021, the Parties amended the Contract to remove the requirement for a Payment and Performance Bond; and

WHEREAS, on the 1st day of November 2021, the Parties amended the Contract to replace Contract Administrator, Thomas Grimaldi, Police Chief, with Public Works and Utilities Director, Lynn Stevens; and

WHEREAS, on the 1st day of November 2021, the Parties utilized the first renewal option, renewing the Contract notwithstanding the date of execution, effective October 21, 2021 for a period of one-year; and

WHEREAS, the Parties desire to amend the Contract amount from $22,400.00 to $29,200.00 , an increase of $6,800.00 due to the increased cost of fertilizer, herbicides, and fuel; and

WHEREAS, the Parties desire to utilize the second renewal option, renewing the Contract Notwithstanding the date of execution, effective October 21, 2022 for a one-year period; and

WHEREAS, the Port Orange Mayor has determined that the execution of this 2022 Amendment and Renewal is beneficial to the citizens of the City of Port Orange.

NOW, THEREFORE, the Parties, for good and valuable consideration, the receipt and sufficiency of which are hereby acknowledged, agree as follows:

The foregoing recitals are true and correct and incorporated herein.

1. *Term*. The Term of this Contract as amended is hereby renewed. Notwithstanding the date of execution, the Contract shall renew on October 21, 2022 and continue for a period of one-year.

2. . *City Obligations*. Notwithstanding the date of execution, effective October 21, 2022, the Contract amount of $22,400.00 is hereby amended to reflect an amount of $29,800.00 for the term of this Contract.

3. *Counterparts*. This 2022 Amendment and Renewal may be executed in one or more counterparts, each of which shall be deemed to be an original but all of which together shall constitute one and the same instrument. The delivery by facsimile or e-mail of an executed copy of this 2022 Amendment and Renewal shall be deemed valid as if an original signature was delivered. No contract shall be formed between Contractor and the City until the City signs this 2022 Amendment and Renewal.

4. All other terms and conditions of the Contract shall remain in full force and effect.

IN WITNESS WHEREOF, the Parties hereto have signed, sealed, and delivered this 2022 Amendment and Renewal on the day and year stated hereinafter.

Witnesses:

G&G OUTDOORS, LLC

By:_____
Ander M. Goiriena, Managing Member

_____
Printed Name:_____

If this Contract is signed by an individual not identified as the President of the corporation in the records of the Florida Department of State, Division of Corporations, please provide written authorization for that individual to enter into contracts on behalf of the corporation.

_____
Printed Name:_____

Date:_____

STATE OF FLORIDA
COUNTY OF VOLUSIA

The foregoing instrument was acknowledged before me by means of __ physical presence or ___ online notarization, this __ day of _____, 2022, by Ander M. Goiriena, as Managing Member of G&G Outdoors, LLC, a Florida limited liability corporation. He is ____ personally known or ____ produced _____as identification.

_____
Notary Public, State of Florida
Printed, typed or stamped name, commission and expiration:

Witnesses:

CITY OF PORT ORANGE

_____
Printed Name:_____

By:_____
Donald O. Burnette, Mayor

_____
Printed Name:_____

Date:_____

STATE OF FLORIDA
COUNTY OF VOLUSIA

The foregoing instrument was acknowledged before me by means of ___physical presence or online notarization, this __day of _____, 2022, by Donald O. Burnette, Mayor of the City of Port Orange, a Florida municipal corporation, on behalf of the city. He is _____personally known or _____produced _____as identification.

_____
Notary Public, State of Florida
Printed, typed or stamped name, commission and expiration:

Witnesses:

ATTEST:

_____
Printed Name:_____

By:_____
Robin L. Fenwick, MMC, City Clerk

_____
Printed Name:_____

Date:_____

STATE OF FLORIDA
COUNTY OF VOLUSIA

The foregoing instrument was acknowledged before me, by means of ___physical presence or online notarization, this __day of _____, 2022, by Robin L. Fenwick, as City Clerk of the City of Port Orange, a Florida municipal corporation, on behalf of the city. She is ___personally known or produced _____as identification.

_____
Notary Public, State of Florida
Printed, typed or stamped name, commission and expiration:

City of Port Orange
Public Works & Utilities Department

TO: Wayne Clark, City Manager

THRU: Lynn Stevens, Director of Public Works & Utilities
Ronny Buttrum, Deputy Director of Public Works
Richard Colby, Project Manager

FROM: Julia Wiggins, Public Works & Utilities Business Manager

DATE: August 25, 2022

SUBJECT: Amendment 2 & Renewal No. 2 – G&G Outdoors LLC CA7285 – Landscape Maintenance Services at the Police Shooting Range

REQUEST:
Public Works & Utilities Department request Council to approve Amendment & Renewal No 2 for the Standard Contract for Services with G&G Outdoors LLC for professional landscape maintenance services at the police shooting range.

PURPOSE:
The purpose of this request is to provide renewal of the current contract and to request a price increase.

CONSIDERATION:
On October 21, 2020, the City entered into a Standard Contract for Services with G&G Outdoors LLC (CA7285) for the Landscape Maintenance Services for Police Shooting Range as outlined under ITB 20-17. The Standard Contract for Services is set to expire on October 22, 2021.

On November 1, 2021, the City Manager approved Amendment & Renewal No 1. This was necessary to remove the payment and performance bond requirement, change the contract administrator, and to exercise the first of three (3) renewal options.

G&G Outdoors, LLC has requested a price increase. The request is based on the increase cost of fertilizer, herbicides and fuel. The over increase is $6,800 for a revised contract amount of $29,200 for the term of October 10/21/2022 through October 20, 2023.

Staff is satisfied with the performance of G&G Outdoors LLC and recommend the contract be renewed for a one-year term effective October 21, 2022 through October 20, 2023.

FUNDING:
Fund: 001
Cost Center: General Fund / Public Works
Program: Grounds Maintenance
Spend Category: Grounds Maintenance Services
Budget FY23: $991,300
Actual $6,800.00

RECOMMENDATION:
The Department of Public Works & Utilities recommends the City Manager approve the Amendment & Renewal No. 1 to the contract (CA7285) with G&G Outdoors LLC.

ANTICIPATED SCHEDULE:
a.) Council Approval: September 20, 2022
b.) Executed Amendment & Renewal No 2: September 30, 2022

ATTACHMENTS:
a.) Price Increase Email
b.) Executed Standard Contract for Services CA7285
c.) Executed Amendment & Renewal No 1
d.) COI from G&G Outdoors LLC

AMENDMENT AND RENEWAL NO. 1
TO STANDARD CONTRACT FOR SERVICES DATED October 21, 2020

THIS AMENDMENT AND RENEWAL NO. 1 ("2021 Amendment and Renewal") is made and entered into the day and year set forth hereinafter by and between the **CITY OF PORT ORANGE, FLORIDA**, a Florida municipal corporation located at 1000 City Center Circle, Port Orange, Volusia County, Florida 32129-4144 (the "City"), and **G&G OUTDOORS, LLC** ("Contractor"), a Florida limited liability corporation, whose principal address is 4059 Quail Nest Lane, New Smyrna Beach, Florida 32168. The City and the Contractor are collectively referred to herein as the "Parties."

WHEREAS, on the 21st day of October 2020, Contractor entered into Contract ("Contract"), pursuant to Intent to Bid Number 20-17 ("ITB 20-17") City Landscape Maintenance Services for the Police Shooting Range, for an initial term of two (2) years, with provisions for three (3) one-year renewals upon written agreement of the Parties, and subject to review and approval by the City Manager; and

WHEREAS, the Parties desire to amend the Contract to remove the requirement for a Payment and Performance Bond; and

WHEREAS, the Parties desire to amend the Contract to replace Contract Administrator, Thomas Grimaldi, Police Chief, with Public Works and Utilities Director, Lynn Stevens; and

WHEREAS, the Parties desire to utilize the first renewal option, renewing the Contract notwithstanding the date of execution, effective October 21, 2021 for a period of one-year; and

WHEREAS, the Port Orange City Manager has determined that the execution of this Contract is beneficial to the citizens of the City of Port Orange.

NOW, THEREFORE, the Parties, for good and valuable consideration, the receipt and sufficiency of which are hereby acknowledged, agree as follows:

The foregoing recitals are true and correct and incorporated herein.

1. *Term*. The Term of this Contract as amended is hereby renewed. Notwithstanding the date of execution, the Contract shall renew on October 22, 2021 and continue for a period of one-year.

2. *Contract Documents*. The Contract Documents of this Contract is hereby amended. Effective immediately, the requirement for a Payment and Performance Bond is hereby removed.

3. *Contract Administrator*. The Contract Administrator of this Contract is hereby amended. Effective immediately, The Public Works and Utilities Director, Lynn Stevens, shall perform contract administration of this Contract. The City may change the contract administrator, from time to time and at any time, upon written notice to Contractor. For notice provisions, see the paragraph below entitled "Notice."

4. *Counterparts*. This Agreement may be executed in one or more counterparts, each of which shall be deemed to be an original but all of which together shall constitute one and the same instrument. The delivery by facsimile or e-mail of an executed copy of this Agreement shall be deemed valid as if an original

signature was delivered. No contract shall be formed between Contractor and the City until the City signs this Agreement.

5. All other terms and conditions of the Contract shall remain in full force and effect.

IN WITNESS WHEREOF, the Parties hereto have signed, sealed, and delivered this Renewal on the day and year stated hereinafter.

Witnesses:

Printed Name: Gabrielle Reed

Printed Name: Mirelle Eichhorn

G&G OUTDOORS, LLC

By: _____
Ander M. Goiriena, Managing Member

If this Contract is signed by an individual not identified as the President of the corporation in the records of the Florida Department of State, Division of Corporations, please provide written authorization for that individual to enter into contracts on behalf of the corporation.

Date: 10/28/21

STATE OF FLORIDA
COUNTY OF VOLUSIA

The foregoing instrument was acknowledged before me by means of X physical presence or ____ online notarization, this 28 day of October, 2021, by Ander M. Goiriena, as Managing Member of G&G Outdoors, LLC, a Florida limited liability corporation. He is ____ personally known or X produced FL Drivers License as identification.

Notary Public, State of Florida
Printed, typed or stamped name, commission and expiration:

Victoria Eichhorn
Comm.#HH084114
Expires: Feb. 5, 2025
Bonded Thru Aaron Notary

Witnesses:

Printed Name: Jamie Miller

Printed Name: Shelby Field

CITY OF PORT ORANGE

By: _____
Wayne Clark, City Manager

Date: 11/1/2021

STATE OF FLORIDA
COUNTY OF VOLUSIA

The foregoing instrument was acknowledged before me by means of X physical presence or ____ online notarization, this 1 day of November, 2021, by Wayne Clark, City Manager of the City of Port Orange, a Florida municipal corporation, on behalf of the city. He is X personally known or ____ produced _____ as identification.

SHELBY FIELD
Commission # GG 274469
Expires November 5, 2022
Bonded Thru Budget Notary Services

Notary Public, State of Florida
Printed, typed or stamped name, commission and expiration:

Witnesses:

Printed Name: Jamie Miller

Printed Name: Shelby Field

ATTEST:

By: _____
Robin L. Fenwick, MMC, City Clerk

Date: 11/1/2021

STATE OF FLORIDA
COUNTY OF VOLUSIA

The foregoing instrument was acknowledged before me, by means of X physical presence or ____ online notarization, this 1 day of November, 2021, by Robin L. Fenwick, as City Clerk of the City of Port Orange, a Florida municipal corporation, on behalf of the city. She is X personally known or ____ produced _____ as identification.

SHELBY FIELD
Commission # GG 274469
Expires November 5, 2022
Bonded Thru Budget Notary Services

Notary Public, State of Florida
Printed, typed or stamped name, commission and expiration:

Wiggins, Julia

From: Ander Goiriena <ggoutdoorsllc@gmail.com>
Sent: Wednesday, July 13, 2022 12:03 PM
To: Wiggins, Julia
Subject: [EXT] Fwd: Notice of Price Increase
Attachments: UPDATE EFF 070122_ITB 20-17 LANDSCAPE MAINTENANCE SERVICES FOR POLICE DEPARTMENT SHOOTING RANGE PRICING SHEET FINAL 8.11.20 (3).xlsx; Bid 5715283.pdf; G&G (1).xls; Scan 14.pdf

Julia,

Please see below and attached. Let us know if any other supporting documentation is needed.

Thank you,
Ander
G&G Outdoors LLC
386-631-4008

---------- Forwarded message ---------
From: **Ander Goiriena** <ggoutdoorsllc@gmail.com>
Date: Fri, May 27, 2022 at 5:44 PM
Subject: Fwd: Notice of Price Increase
To: Stevens, Lynn <lstevens@port-orange.org>

Lynn,

Per our conversation yesterday, please see below, and attached documents to support.

Fertilizer: 2021 Cost was $17.50/bag, 2022 Cost is now $27.50 = 63% increase
Herbicide: 2021 Cost was $109/2.5 gallon, 2022 Cost is now $205 = 53% increase
Fuel: 2021 Average was $2.93/gallon, 2022 cost now is $4.47/gallon = 65% Increase

After looking at the current cost of insecticide, I don't feel it was necessary to pull receipts from last year (all with my accountant) as I don't recall it being much less than what it is now. Let me know if you have any questions, or if there is anything else I can provide.

Thank you,
Ander

From: **Ander Goiriena** <ggoutdoorsllc@gmail.com>
Date: Tue, May 24, 2022 at 10:50 AM
Subject: Notice of Price Increase
To: Cross, John <jcross@port-orange.org>, Portillo, Silvio <sportillo@port-orange.org>, Fisher, Eric <EricF@port-orange.org>

Good Morning All--

"ATTACHMENT 1" SCHEDULE OF UNIT PRICING
BID FORM
CITY OF PORT ORANGE
ITB #20-17

LANDSCAPING MAINTENANCE SERVICES FOR POLICE DEPARTMENT SHOOTING RANGE

Completed Attachment 1 Bid Proposal form MUST be included with Bid Submission

Instruction to save Attachment from DemandStar website:
Perform "File Save As" and save spreadsheet to your computer. Fill in pricing in highlighted cells electronically.

Bidders are required to complete all fields shaded in green. All other fields will be automatically calculated, if submitted electronically.

NAME OF BUSINESS:	
CONTACT PERSON:	
EMAIL ADDRESS:	
AUTHORIZED NAME:	
AUTHORIZED SIGNATURE:	

	DESCRIPTION	SQUARE FOOTAGE	ACRES	COST PER VISIT	Cost Effective July 1, 2022	MAINTENANCE VISITS PER YEAR	TOTAL ANNUAL COST (original)	Updated Annual
	Shooting Range Maintenance Levels							
1	Tactical, Handgun, and Rifle Range	196,020	4.5	$ 155.00	$ 250.00	24	$ 3,720.00	$ 6,000.00
2	Remaining Property (Ponds)	609,840	14	$ 380.00	$ 425.00	20	$ 7,600.00	$ 8,500.00
3	Berms	25,000	0.57	$ 425.00	$ 475.00	4	$ 1,700.00	$ 1,900.00
4	Fenceline	N/A	N/A	$ 515.00	$ 550.00	12	$ 6,180.00	$ 6,600.00
5	Fertilization	196,020	4.5	$ 1,000.00	$ 2,000.00	2	$ 2,000.00	$ 4,000.00
6	Disease and Insect Control	196,020	4.5	$ 1,200.00	$ 2,200.00	1	$ 1,200.00	$ 2,200.00
						Total Price:	$ 22,400.00	$ 29,200.00
							Total Annual Increase:	$ 6,800.00

Item#	Description	Order#	Type	Br #	Order Date
49313	Tribune Diquat Non Selective Liquid Herbicide 1 gal.	111741759-001	Sales Order	465	8/3/2021 1:35 PM
10446041	LESCO Three-Way Selective Post Emergent Liquid Herbicide 2.5 gal	108644745-001	Sales Order	465	5/3/2021 8:35 AM

Unit Price	Qty	UOM
91.295	1	EA
109.5	1	EA

Bid

SiteOne LANDSCAPE SUPPLY
Stronger Together

South Daytona FL #465
2430 S Nova Rd
South Daytona, FL 32119-8838
F: (386)760-3027

Bill To:

G&G Outdoors (#1106354)
4059 Quail Nest Ln
New Smyrna Beach, FL 32168-5206
W: (386)631-4008

Ship To:

G&G Outdoors (#1106354)
4059 Quail Nest Ln
New Smyrna Beach, FL 32168-5206
W: (386)631-4008

Created	Quote#	Due Date	Expected Award Date	Expiration Date
05/27/2022	5715283	06/27/2022	06/27/2022	06/27/2022

Printed	Job Name	Job Description	Job Start Date
05/27/2022 10:03:01			06/27/2022

Line #	Item #	Item Desc	Qty	Unit Price	Extended Price
1	510098	LESCO Fertilizer 10-10-10 A/C 39% AS 50 lb.	1	30.088	30.09
2	86703432	LESCO Prosecutor Pro Non Selective Liquid Herbicide 2.5 gal. (069289)	1	205.243	205.24

Total Price: $ 235.33

Quoted price is for material only. Applicable sales tax will be charged when invoiced. All product and pricing information is based on the latest information available and is subject to change without notice or obligation.
Local tax may differ based on locations and local codes.

Item#	Description	Order#	Type	Br #	Order Date	Unit Price	Qty	UOM
49313	Tribune Diquat Non Selective Liquid Herbicide 1 gal.	111741759-001	Sales Order	465	8/3/2021 1:35 PM	91.295	1	EA
10446041	LESCO Three-Way Selective Post Emergent Liquid Herbicide 2.5 gal.	108644745-001	Sales Order	465	5/3/2021 8:35 AM	109.5	1	EA

HICKLING FEED, INC.

549 N. Samsula Drive
NEW SMYRNA BEACH, FLORIDA 32168
(386) 427-7370

Terms: Payable upon receipt. All past due accounts are subject to service charge of 1½% per month (18% per annum)

CUSTOMER'S ORDER NO	PHONE	DATE 5-27-22
NAME G&G Outdoors		
ADDRESS		

SOLD BY	CASH	C.O.D.	CHARGE	ON ACCT.	MDSE. RET'D.	PAID OUT	

QTY.	DESCRIPTION	PRICE	AMOUNT
1	Fertelizer 16-4-8		
	Price 2021		17.50
	Price 2022		27.50
	Thank you!	TAX	
RECEIVED BY		TOTAL	

339338

All claims and returned goods MUST be accompanied by this bill.

Thank You!

PRODUCT 2531

CITY OF PORT ORANGE
STANDARD CONTRACT FOR SERVICES

This Standard Contract for Services ("Contract") is entered into this 21 day of October, **2020**, by and between the **CITY OF PORT ORANGE**, a Florida municipal corporation, whose principal address is 1000 City Center Circle, Port Orange, Florida 32129 (the "City"), and **G&G OUTDOORS, LLC**, a Florida limited liability corporation whose principal address is 4059 Quail Nest Lane, New Smyrna Beach, Florida("Contractor"). The City and Contractor are collectively referred to herein as the "Parties."

1. *Provision of Services*

(a) The Contractor hereby agrees to provide to the City Landscape Maintenance Services for the Police Shooting Range, pursuant to Intent to Bid 20-17 ("ITB 20-17"). This Contract together with ITB 20-17, Addenda, and Contractor's proposal, all of which may be referred to as the "Contract" and all of which are made a part hereof by reference shall constitute the formal written contract between the City and Contractor. For convenience, Section 3, Scope of Services, of ITB 20-17 and the Bid Tabulation as submitted by Contractor in Contractor's Proposal, are attached hereto as **Exhibit "1"**. A complete copy of ITB 20-17, Addenda, and Contractor's Proposal are available in the Office of the City Clerk. Contractor represents that they are familiar with the documents that make up the Contract, as referenced hereinabove.

(b) The time, manner and place for performance of such services shall be:

Term: The initial term of this Contract shall become effective on the last date the Contract is signed by the Parties and shall continue for a period of one-year ("Initial Term").

Renewals: Upon written agreement of the Parties, this Contract may be renewed for three (3) one-year periods, subject to review and approval of the City Manager and budget appropriation.

Manner and Place: The work shall be performed in accordance with and in a manner as required by all current federal, state, county, fire, building and land development codes, laws, ordinances and regulations, and with applicable permits and licenses per the City Code of Ordinances.

Time and Essence: Contractor acknowledges that time is of the essence for this Contract.

Authorization for Services: This Contract standing alone does not authorize the purchase of any goods or services or require the City to place any orders for goods or service. Authorization for the purchase of goods or services from Contractor under this Contract shall be upon issuance of a Notice to Proceed and a written Purchase Order issued by the City and executed by the City Manager. The City reserves the right to contract with other parties for the goods and services contemplated by this Contract, as determined in the City's sole and absolute discretion.

2. *City Obligations*. In return for the services identified above, the City agrees to compensate the Contractor at the pricing set forth in Exhibit "1," attached hereto, in an amount not to exceed Twenty-Two Thousand Four Hundred

and 00/100 Dollars ($22,400.00). All payments shall be governed by the Local Government Prompt Payment Act as set forth in Sections 218.70 through 218.79, Florida Statutes, as amended.

3. *Contract Documents*. The following forms, attached as Exhibit "2," are an integral part of this Contract and must be completed, signed, witnessed and notarized as indicated and returned with the signed Contract:

a. Front Page for Bond (F.S. § 255.05)
b. Combination Payment and Performance Bond (F.S. § 255.05)

4. *Contract Administration*. The Police Chief, Thomas Grimaldi, shall perform contract administration of this Contract. The City may change the contract administrator, from time to time and at any time, upon written notice to Contractor. For notice provisions, see the paragraph below entitled "Notice."

5. *Liens*. Contractor acknowledges that Contractor shall not be entitled to lien the City or other public property.

6. *Termination for Convenience of the City*

(a) The parties agree that the City may terminate this Contract, or any work or delivery required hereunder, from time to time either in whole or part, whenever the City Manager of Port Orange shall determine that such termination is in the best interest of the City.

(b) Termination, in whole or in part, shall be effected by delivery of a Notice of Termination signed by the City Manager or his designee, mailed or delivered to the Contractor, and specifically setting forth the effective date of termination.

(c) Upon receipt of such Notice, the Contractor shall:

(i) cease any further deliveries or work due under this Contract, on the date, and to the extent, which may be specified in the Notice;

(ii) place no further orders with any subcontractors except as may be necessary to perform that portion of this Contract not subject to the Notice;

(iii) terminate all subcontracts except those made with respect to contract performance not subject to the Notice;

(iv) settle all outstanding liabilities and claims which may arise out of such termination, with the ratification of the Finance Director of Port Orange; and

(v) use best efforts to mitigate any damages which may be sustained by the Contractor as a consequence of termination under this clause.

(d) After complying with the provisions of subparagraph (c), above, the Contractor shall submit a termination claim, in no event later than six (6) months after the effective date of termination, unless one or more extensions of three (3) months each are granted by the Finance Director.

(e) The Finance Director, with the approval of the City Manager, shall pay from the using department's budget, reasonable costs of termination, including a reasonable amount for profit on supplies or services delivered or work completed. In no event shall this amount be greater than the original contract price, reduced by any payments made prior to Notice of Termination, and further reduced by the price of the supplies not delivered or the services not provided. This Contract shall be amended accordingly, and the Contractor shall be paid the agreed amount.

(f) In the event that the parties cannot agree on the whole amount to be paid to the Contractor by reason of termination under this clause, the Finance Director shall pay the Contractor the amounts determined as follows, without duplicating any amounts which may have already been paid under the preceding paragraph of this clause:

(i) With respect to all Contract performance prior to the effective date of Notice of Termination, the total of:

(1) the cost of work performed or supplies delivered;

(2) the cost of settling and paying any reasonable claims as provided in paragraph (c) (iv), above;

(3) a sum as profit on (a) determined by the Finance Director to be fair and reasonable.

(ii) The total sum to be paid under (i) above shall not exceed the contract price, as further reduced by the contract price of work or supplies not terminated.

(g) In the event that the Contractor is not satisfied with any payments which the Finance Director shall determine to be due under this clause, the Contractor may appeal any claim to the City Council in accordance with Paragraph 23 of this contract concerning disputes.

7. *Termination for Convenience for Subcontractors*. In accordance with the termination for the convenience of the City provision of this contract, the Contractor shall include similar provisions in any subcontract, and shall specifically include a requirement that subcontractors make all reasonable efforts to mitigate damages which may be suffered. Failure to include such provisions shall bar the Contractor from any recovery from the City whatsoever of loss or damage sustained by a subcontractor as a consequence of termination for convenience.

8. *Termination for Default*. Either party may terminate this Contract, without further obligation, for the default of the other party or its agents or employees with respect to any agreement or provision contained herein. In the event of default by the contractor, the City reserves the right to procure the item(s) bid from other sources and holds the bidder responsible for excess costs incurred as a result. City Council may elect to refrain from doing business with the bidder as stipulated in City Code 2-276 Suspension and Disbarment.

9. *Examination of Records*

(a) The Contractor agrees that the City, or any duly authorized representative, shall, until the expiration of five (5) years after final payment hereunder, have access to and the right to examine and copy any pertinent books, documents, papers and records of the Contractor involving transactions related to this Contract.

(b) The Contractor further agrees to include in any subcontract for more than $10,000 entered into as a result of this Contract, a provision to the effect that the subcontractor agrees that the City or any duly authorized representative shall, until the expiration of five (5) years after final payment under the subcontract, have access to and the right to examine and copy any pertinent books, documents, papers and records of such contractor involved in transactions related to such subcontract, or this Contract. The term subcontract as used herein shall exclude purchase orders for public utility services at rates established for uniform applicability to the general public.

(c) The period of access provided in subparagraphs (a) and (b) above for records, books, documents and papers which may relate to any arbitration, litigation, or the settlement of claims arising out of the performance of this contract or any subcontract shall continue until any appeals, arbitration, litigation or claims shall have been finally disposed of.

10. *Public Records Compliance*. Contractor shall comply with public records laws as set forth in Chapter 119, Florida Statutes, and shall specifically:

(a) Keep and maintain public records required by the City to perform the service.

(b) Upon request from the City's custodian of public records, provide the City with a copy of the requested record or allow the records to be inspected or copied within a reasonable time at a cost that does not exceed the cost provided in Section 119, Florida Statutes, or as otherwise provided by law.

(c) Ensure that public records that are exempt from public records disclosure requirements are not disclosed except as authorized by law for the duration of the Contract term and following completion of the Contract if the Contractor does not transfer the records to the City.

(d) Upon completion of the Contract, Contractor shall transfer to the City, at no cost, all public records in possession of the Contractor and destroy any duplicate public records that are exempt from public records disclosure requirements. All records stored electronically must be provided to the City, upon request from the City's custodian of public records, in a format that is compatible with the information technology systems of the City.

If Contractor does not comply with a public records request, the City shall deem the non-compliance a breach of this Contract, and the Contractor may be subject to penalties under Section 119.0701, Florida Statutes.

CONTRACTOR QUESTIONS RELATING TO CONTRACTOR'S DUTIES TO PROVIDE PUBLIC RECORDS RELATING TO THIS CONTRACT MUST BE FORWARDED TO THE OFFICE OF THE CITY CLERK, CITY HALL, 1000 CITY CENTER CIRCLE, PORT ORANGE, FLORIDA 32129; TELEPHONE: (386) 506-5563; E-MAIL: CITYCLERK@PORT-ORANGE.ORG.

11. *Termination for Non-Appropriation of Funds*

(a) If funds are not appropriated for any succeeding fiscal years subsequent to the one in which this contract is entered into, for the purpose of this Contract, then the City may terminate this Contract upon thirty (30) days prior written notice to the Contractor. Should termination be accomplished in accordance with this Section, the City shall be liable only for payments due through the date of termination.

(b) The City agrees that should it terminate in accordance with this Section, it shall not obtain services which are substantially equal to or similar to those for which this contract was entered into. This provision shall survive any termination of the Contract.

12. *Insurance*. Contractor shall maintain insurance, as required herein, during the life of this Contract. Contractor shall provide to the City, a certificate of insurance endorsing the City of Port Orange as an additional named insured. All insurance coverages of the Contractor shall be primary and non-contributory. All insurance coverages of the Contractor shall not seek contribution from any other insurance or self-insurance available to the City. For workers' compensation coverage, the Contractor's insurance certificate shall include the insurer's waiver of subrogation in lieu of endorsing the City as an additional insured for workers' compensation. The City shall not accept Workers' Compensation Exemptions Contractor may use leased employees if the Contractor ensures that all workers who access the jobsite are employees covered by the employee leasing company, and no non-employees are permitted to access the jobsite. Any Contractor using a leased employee shall complete the City's Leased Employee Affidavit Form Exhibit. Policies for Workers' Compensation may be issued by companies authorized as a group self-insurer by F.S. 440.572.

Policies other than Workers' Compensation shall be issued by insurers licensed and/or duly authorized under Florida Law to do business in the State of Florida and all insuring companies are required to have a minimum rating of "A-" in the "Best Key Rating Guide" published by A.M. Best & Company, Inc. Contractor shall not commence work under this Contract until the City has received a certificate or certificates of insurance with endorsement evidencing

the required insurance. Insurer shall provide the City written notice of cancellation, nonrenewal or any other changes in coverage no later than thirty (30) days prior to the effective date of the change and shall provide notice to the City no later than 10 days after non-payment. The Certificates of Insurance and required insurance policies shall contain provisions that thirty (30) days prior written notice shall be given to the City of any cancellation, intent not to renew, or reduction in the policies or coverages.

Contractor shall require and ensure each of its subcontractors to maintain, until the completion of the subcontractor's work, insurance of the types and to the limits set forth herein. All insurance coverages shall be primary and non-contributory. All insurance coverages of the subcontractors shall not seek contribution from any other insurance or self-insurance available to the City. The Contractor is responsible for ensuring that its subcontractors maintain the required coverage. Failure of the Contractor to ensure the subcontractors maintain the required coverage, shall not relieve the Contractor of any contractual responsibility, obligation or liability.

The City reserves the right to increase insurance coverage as determined for higher risk contracts.

The acceptance by the City of any Certificate of Insurance does not constitute approval or agreement by the City that the insurance requirements have been satisfied or that the insurance policy shown on the Certificate of Insurance is in compliance with this Contract and does not waive the insurance required by this Contract.

Should at any time the Contractor or subcontractors not maintain the insurance coverages required herein, the City may terminate the Contract or at its sole discretion shall be authorized to purchase such coverages and charge the Contractor for such coverages purchased. The City shall be under no obligation to purchase such insurance, nor shall it be responsible for the coverages purchased or the insurance company or companies used. The decision of the City to purchase such insurance coverages shall in no way be construed to be a waiver of any of its rights under the Contract.

Standard Insurance Requirements			
	Insurance	**Standards**	**Additional Requirements**
☒	Workers' Compensation The Contractor shall maintain coverage for its employees with statutory workers' compensation limits, and no less than the limits indicated in the Schedule of Limits for Employers' Liability. Said coverage shall include a waiver of subrogation in favor of the City. **The City will not accept elective exemptions**. Any contractor using an employee leasing company shall complete the Leased Employee Affidavit Form Exhibit.	Contract Amount / Limits Up to $10 million / Statutory/$500,000 $10 - $20 million / Statutory/$1,000,000 Contracts over $20 million To Be Determined by the City.	☐If Contract requires work on or about navigable waters, Longshoreman's and Harbor Workers' Coverage required. ☐If vessels involved, Jones Act coverage with limits of $500,000 required.

☒	Comprehensive General Liability (including Completed Operations and **Contractual Liability**	Limits: Combined Single Limit Bodily Injury and Property damage $1,000,000 occurrence $1,000,000 aggregate	☐When work is on or under Railroad rights of way or properties, the Contractor shall take out and maintain during the life of the Contract, Railroad **protective liability and property damage** insurance in amounts as requested by the Railroad.
☒	Comprehensive Business, Automobile Liability to include all owned, hired and non-owned automobiles.	Limits: Auto Liability Body Injury and Property Damage: $1,000,000 each occurrence $1,000,000 aggregate	
	Additional Insurance Requirements		
☐	Property Insurance Builders Risk. Additional Coverage:	Limits: Buildings - Completed value of Contract. "All Risk" coverage on latest ISO for or its equivalent. Permission granted to occupy. Owner named as insured AIMA	If Agreement requires handling or installation of Owner's equipment, coverage should be furnished on "All Risk" form, including transit and Owner shall be named.
☐	Professional Liability	Limits: Coverage - $1,000,000	
☐	Installation Floater (IT)	Limits: Coverage - $ To be determined.	
☐	Contractor Pollution Liability	Limits: Coverage - $1,000,000	
☐	Errors and Omissions	Limits: Coverage - $1,000,000	
☐	Umbrella Policy	Limits: Coverage – $ To be determined.	
☒	Payment and Performance Bond Required	Limits: Coverage - Equal to amount of Contract.	
☐	**City Manager waives Payment and Performance Bond for work under $25,000.00.**		
☐	**Unless otherwise required by law, City Manager waives Insurance for FOB goods under $25,000.00.**		

13. *A Contract for the purchase* of supplies shall be governed by the City of Port Orange Code of Ordinances, as amended, and such supplies shall be deemed "goods," as defined therein.

14. *Assignability of Contract*. Neither this contract, nor any part hereof, may be assigned by the Contractor to any other party without the express written approval of the City Council.

15. *Modifications or Changes to this Contract*

(a) Change Orders. The Department Head, with the concurrence of the City's signatory as required by the City's Purchasing Policy, shall without notice to any sureties, have the authority to order changes in this Contract which affect the cost or time of performance. Such changes shall be ordered in writing specifically designated to be a change order. Such orders shall be limited to reasonable changes in the services to be performed or the time of the performance. The City will not be held liable for any changes which have not been properly authorized and approved in accordance with this Contract.

(b) If any change under this clause causes an increase or decrease in Contractor's cost of, or time required for the performance of the work hereunder, Contractor shall receive an equitable adjustment in accordance with subparagraph (d), which shall include all compensation to the Contractor, or the City, of any kind in connection with such change, including all costs and damages related to or incidental to such change.

(c) Contractor need not perform any work described in any change order unless it has received a certification from the City that there are funds budgeted and appropriated sufficient to cover the cost of such changes.

(d) No claim for changes ordered hereunder shall be considered if made after final payment in accordance with the Contract.

16. *Sovereign Immunity*. The City expressly retains all rights, benefits and immunities of sovereign immunity in accordance with Section 768.28, Florida Statutes. Notwithstanding anything set forth in any section of this Contract to the contrary, nothing in this Contract shall be deemed as a waiver of immunity or limits of liability of the City beyond any statutory limited waiver of immunity or limits of liability which may have been adopted by the Florida Legislature or may be adopted by the Florida Legislature and the cap on the amount and liability of the City for damages regardless of the number or nature of claims in tort or equity shall not exceed the dollar amount set by the legislature for tort. Nothing in this Contract shall inure to the benefit of any third party for the purpose of allowing any claim against the City which would otherwise be barred under the Doctrine of Sovereign Immunity or operation of law.

17. *Warranties*. Contractor warrants that (1) the supplies to be provided to the City pursuant to this Contract are fit and sufficient for the purpose intended; (2) the supplies are merchantable, of good quality, and free from defects, whether patent or latent, in material or workmanship, and (3) the supplies sold to the City pursuant to this Contract conform to the standards required by this Contract.

Contractor further warrants that Contractor has title to the supplies provided, and that the supplies are free and clear of all liens encumbrances, and security interests. All warranties made in this Contract, together with service warranties and guarantees, shall run to the City and its successors and assigns.

18. *Additional Warranties*. Contractor further expressly warrants that materials and workmanship are warranted from defect for a one-year period. This is a minimum acceptable warranty.

19. *Additional Bond Security*. If any surety bond furnished in connection with this Contract becomes unacceptable to the City, Contractor shall promptly furnish such additional security as may be required from time to time to protect the interests of the City and a person supplying labor and materials in the prosecution of work contemplated by this Contract. Contractor expressly acknowledges that if the work to be performed hereunder is a public work, a Payment and Performance Bond, in accordance with Florida Statutes Section 255.05, in a form acceptable to the City, shall be provided and recorded with the Clerk of Volusia County at Contractors expense.

20. *Inspection*

(a) All supplies (which term throughout this clause includes without limitation raw materials, components, intermediate assemblies, and their products) shall be subject to inspection and test by the City, to the extent practicable at all times and places including the place of manufacturer, and in any event prior to acceptance.

(b) In the event any supplies or lots of supplies are defective in material or workmanship, or otherwise not in conformity with the requirements of this Contract, the City shall have the right either to reject them (with or without instructions as to their disposition) or to require their correction. Supplies or lots of supplies which have been rejected or required to be corrected shall be removed or, if permitted or required by the Finance Director, corrected in place by and at the expense of Contractor promptly after notice, and shall not thereafter be tendered for acceptance unless the former rejection or requirement of correction is disclosed. If Contractor fails promptly to remove such supplies or lots of supplies which are required to be removed or promptly to replace or correct such supplies or lots of supplies, the City may either (i) by contract or otherwise replace or correct such supplies and charge Contractor the cost for such replacement or correction; or (ii) may terminate this Contract for default as provided in the clause of this Contract entitled "Termination for Default." Unless Contractor corrects or replaces such supplies within the

delivery schedule, the Finance Director may require the delivery of such supplies at a reduction in price, which is equitable under the circumstances. Acceptance or rejection of the supplies shall be made as promptly as practicable after delivery, except as otherwise provided in this Contract. Failure to inspect and accept or reject supplies shall neither relieve Contractor from responsibility for such supplies as are not in accordance with the Contract requirements nor impose liability on the City therefor.

(c) The inspection and test by the City of any supplies or lots thereof does not relieve Contractor from any responsibility regarding defects or other failures to meet the Contract requirements, which may be discovered prior to acceptance. Except as otherwise provided in this Contract, acceptance shall be conclusive except as regards latent defects, fraud, or such gross mistakes as amount to fraud.

21. *Liability for Loss or Damage*.

(a) Contractor shall be liable for any loss of, or damage to, City property caused by the negligence, recklessness, or intended wrongful misconduct of Contractor, his/its agents, servants and employees and shall indemnify and save the City harmless against all actions, proceedings, claims, demands, costs, damages and expenses, including attorney's fees, by reason of any suit or action brought for any actual or alleged injury to or death of any person or damage to property other than City property, resulting from the performance of the Contract by Contractor, his/its agents, servants and employees. Contractor shall submit a full written report to the Finance Director within twenty-four (24) hours following the occurrence of such damage, loss or injury.

(b) To the fullest extent permitted by law, in addition to the express duty to indemnify City when there is any causal connection between Contractor's work and any injury, loss, damage, death or property damage, Contractor expressly undertakes a duty to defend City as a separate duty, independent of and broader than the duty to indemnify. The duty to defend agreed to by Contractor hereby expressly include all costs of litigation, attorney's fees, settlement costs and reasonable expenses in connection with the litigation, whether or not the claims made for loss, injury, damage or property damage are valid or groundless and regardless of whether the defense of City is maintained by the City or assumed by Contractor as long as the claims made could be causally connected to Contractor as reasonable determined by City.

22. *Non-discrimination*. During the performance of this Contract, Contractor agrees as follows:

(a) Contractor will not discriminate against any employee or applicant for employment because of race, religion, color, sex, disability, marital status, age or national origin, except where such is a bona-fide occupational qualification reasonably necessary to the normal operation of Contractor. Contractor agrees to post in conspicuous places, available to employees and applicants for employment, notices setting forth the provisions of this non-discrimination clause. Contractor agrees and fully supports and complies with the Americans with Disabilities Act of 1990.

(b) Contractor shall state in all solicitations or advertisements for employees placed by or on behalf of Contractor that Contractor is an equal opportunity employer.

(c) Notices, advertisements and solicitations placed in accordance with federal law, rule or regulation shall be deemed sufficient compliance with this provision. Contractor shall include the provisions of the foregoing subparagraphs (a), (b), and (c) in every subcontract or purchase order of over $10,000 so that the provisions will be binding upon each subcontractor or vendor.

23. *Disputes*. The City Manager, who shall reduce his decision to writing and mail or otherwise furnish a copy thereof to Contractor, shall decide disputes with respect to this Agreement. The decision by the City Manager shall be final and binding unless, within five (5) business days from the date of delivery of the decision of the City Manager,

appeal is made to the City Council in writing and delivered to the City Clerk, Robin L. Fenwick, MMC. The decision of the City Council shall be final and binding unless set aside by a court of competent jurisdiction as fraudulent, capricious, arbitrary, or so grossly erroneous as necessary to imply bad faith, or not to be supported by any evidence.

24. *Force Majeure*. Neither party shall be liable for any delay in performance or failure to perform any obligation hereunder if, and to the extent that, such failure or delay is caused by an event of Force Majeure. Force Majeure shall mean any act, event or condition that is beyond the party's reasonable control, that materially and adversely affects the party's ability to perform its obligations hereunder, and that is not the result of the party's willful neglect, error, omission or failure to exercise reasonable due diligence.

25. *Controlling Law*. **THIS AGREEMENT CONTAINS IMPORTANT MATTERS AFFECTING LEGAL RIGHTS AND IS ACCEPTED AND ENTERED INTO IN FLORIDA AND ANY QUESTION REGARDING ITS VALIDITY, CONSTRUCTION, ENFORCEMENT, OR PERFORMANCE SHALL BE GOVERNED BY FLORIDA LAW. ANY LEGAL PROCEEDING ARISING FROM OR IN ANY WAY REGARDING THE AGREEMENT SHALL HAVE ITS VENUE LOCATED EXCLUSIVELY IN THE CIRCUIT COURT OF VOLUSIA COUNTY, FLORIDA, AND THE PARTIES HEREBY EXPRESSLY CONSENT AND SUBMIT THEMSELVES TO THE PERSONAL JURISDICTION AND VENUE OF THE COURT.**

26. *Additional Provisions*. This Contract includes all additional provisions as may have been outlined in written quotes and purchase orders and any attachments or exhibits to this Contract whether delivered herewith or subsequently approved as a part hereof, such as drawings or technical specifications prepared in the performance of this work. In the event of a conflict between any attachments or exhibits to this Contract, and this Contract, the language of this Contract shall control.

27. *Integration*. This Contract and the documents incorporated herein by reference shall constitute the whole agreement between the parties. There are no promises, terms, conditions, or obligations other than those contained herein, and this Contract shall supersede all previous communications, representations, or agreements, written or verbal, between the parties hereto.

28. *Notice*. For purposes of this agreement, notices shall be sent as follows:

City:	City of Port Orange Attention: City Manager 1000 City Center Circle Port Orange, Florida 32129 (386) 506-5501
Copy to:	City of Port Orange Attention: Thomas Grimaldi, Police Chief 1000 City Center Circle Port Orange, Florida 32129 (386) 506-5870
Contractor:	G&G Outdoors, LLC Attention: Ander M. Goiriena, Managing Member 4059 Quail Nest Lane New Smyrna Beach, Florida 32168 (386) 631-4008 – Telephone ggoutdoorsllc@gmail.com

Any notice or other communication given under the Contract will be in writing and delivered by hand, sent by facsimile (provided acknowledgement of receipt thereof is delivered to the sender), sent by certified, registered mail, or sent by any nationally recognized overnight courier service to the addresses provided herein. The parties may, from time to time and at any time, change their respective addresses and each will have the right to specify as its address any other address by at least 10 days written notice to the other party.

29. *Contract Construction*

This Agreement may be executed in one or more counterparts, each of which shall be deemed to be an original but all of which together shall constitute one and the same instrument. The delivery by facsimile or e-mail of an executed copy of this Agreement shall be deemed valid as if an original signature was delivered. No contract shall be formed between Contractor and the City until the City signs this Agreement.

30. *Authority to Sign*. Each person signing this Agreement warrants that he or she is duly authorized to do so and to bind the respective party to the Agreement.

[Remainder of this page intentionally left blank]

G&G OUTDOORS, LLC

Witnesses:

Jeanne C. Goiriena

Printed Name: Jeanne C. Goiriena

Gilie Steger

Printed Name: Gilie Steger

By: _____

Ander M. Goiriena, Managing Member

If this Contract is signed by an individual not identified as the President of the corporation in the records of the Florida Department of State, Division of Corporations, please provide written authorization for that individual to enter into contracts on behalf of the corporation.

Date: 10/9/2020

STATE OF FLORIDA
COUNTY OF VOLUSIA

The foregoing instrument was acknowledged before me by means of X physical presence or ___ online notarization, this 9th day of October, 2020, by Ander M. Goiriena, as Managing Member of G&G Outdoors, a Florida corporation. He is X personally known or ___ produced _____ as identification.

NOTARY PUBLIC STATE OF FLORIDA

RONALD S. STEGER
Commission # GG 346032
Expires July 2, 2023
Bonded Thru Budget Notary Services

Notary Public, State of Florida
Printed, typed or stamped name, commission and expiration:

Witnesses:

Shelby Field

Printed Name: Shelby Field

Ruth E. Thayne

Printed Name: RUTH E. THAYNE

CITY OF PORT ORANGE

By: _____

Donald O. Burnette, Mayor

Date: 10/21/2020

STATE OF FLORIDA
COUNTY OF VOLUSIA

The foregoing instrument was acknowledged before me by means of X physical presence or ___ online notarization, this 21st day of October, 2020, by Donald O. Burnette, as Mayor of the City of Port Orange, a Florida municipal corporation, on behalf of the city. He is X personally known or ____ produced _____as identification.

Notary Public State of Florida
Ruth E. Thayne
My Commission GG 913343
Expires 10/05/2023

Ruth E. Thayne

Notary Public, State of Florida
Printed, typed or stamped name, commission and expiration:
RUTH E. THAYNE

Witnesses:

Shelby Field

Printed Name: Shelby Field

Ruth E. Thayne

Printed Name: RUTH E. THAYNE

ATTEST:

By: _____

Robin L. Fenwick, MMC, City Clerk

Date: 10/21/2020

STATE OF FLORIDA
COUNTY OF VOLUSIA

The foregoing instrument was acknowledged before me, by means of X physical presence or ___ online notarization, this 21st day of October, 2020, by Robin L. Fenwick, as City Clerk of the City of Port Orange, a Florida municipal corporation, on behalf of the city. She is X personally known or ___ produced _____as identification.

Notary Public State of Florida
Ruth E. Thayne
My Commission GG 913343
Expires 10/05/2023

Ruth E. Thayne

Notary Public, State of Florida
Printed, typed or stamped name, commission and expiration:
RUTH E. THAYNE

EXHIBIT "1"

Contractor's Schedule to Unit Prices and Scope of Work

Consisting of 8 Pages

"ATTACHMENT 1" SCHEDULE OF UNIT PRICING
BID FORM
CITY OF PORT ORANGE
ITB #20-17

LANDSCAPING MAINTENANCE SERVICES FOR POLICE DEPARTMENT SHOOTING RANGE

Completed Attachment 1 Bid Proposal form MUST be included with Bid Submission

Instruction to save Attachment from DemandStar website:
Perform "File Save As" and save spreadsheet to your computer. Fill in pricing in highlighted cells electronically.

Bidders are required to complete all fields shaded in green. All other fields will be automatically calculated, if submitted electronically.

NAME OF BUSINESS:	G&G Outdoors, LLC
CONTACT PERSON:	Ander Goiriena
EMAIL ADDRESS:	ggoutdoorsllc@gmail.com
AUTHORIZED NAME:	Ander Goiriena
AUTHORIZED SIGNATURE:	

	DESCRIPTION	SQUARE FOOTAGE	ACRES	COST PER VISIT	MAINTENANCE VISITS PER YEAR	TOTAL ANNUAL COST
	Shooting Range Maintenance Levels					
1	Tactical, Handgun, and Rifle Range	196,020	4.5	$ 155.00	24	$ 3,720.00
2	Remaining Property (Ponds)	609,840	14	$ 380.00	20	$ 7,600.00
3	Berms	25,000	0.57	$ 425.00	4	$ 1,700.00
4	Fenceline	N/A	N/A	$ 515.00	12	$ 6,180.00
5	Fertilization	196,020	4.5	$ 1,000.00	2	$ 2,000.00
6	Disease and Insect Control	196,020	4.5	$ 1,200.00	1	$ 1,200.00
					Total Price:	$ 22,400.00

SECTION 3 - SCOPE OF WORK and REQUIREMENTS

STATEMENT OF RESPONSIBILITIES

The Contractor shall be responsible for providing machinery, equipment, tools, materials, labor, supervision, transportation, supplies, insurance, proper safety measures and all incidentals necessary to provide and perform grounds maintenance services to the Police Department Shooting Range, which includes the Tactical, Handgun, Rifle Ranges, stormwater pond areas, parking areas, and fencing.

Please note, while the City has provided the square footage and acre measurements on each area covered under this contract, these measurements are APPROXIMATE only. Contractor awarded bid shall be responsible for all maintenance required in each respective area. The Non-Mandatory Pre-Bid conference will include a site visit to the area. It is highly recommended that each bidder attends the non-mandatory meeting.

Number of Site Visits

Tactical, handgun, and rifle ranges - A total of twenty-four (24) maintenance visits shall be provided each calendar year to include mowing, edging, weed eating and trimming of the Tactical, handgun, and rifle ranges to include the areas around the bathrooms and storage buildings; approximately 4.5 acres.

Berms - A total of four (4) maintenance visits shall be provided each calendar year to include mowing, weed eating and trimming of all berms located on the property.

Remaining property - A total of twenty (20) maintenance visits shall be provided each calendar year to include mowing, edging, weed eating and trimming the remaining property approximately 14 acres.
Fence lines shall be cut back and/or chemically sprayed with weed killer at least once (1) per month or more as needed.

Minimum Level of Service Required for Each Site

TRASH / DEBRIS CLEANUP

The Contractor shall be responsible for removing all litter and debris prior to mowing from all turf grass areas, parking areas, and sidewalks. This includes but is not limited to the following: excessive leaves, acorns, blooms, paper, bottles, cans, and palm fronds tree limbs from all sites covered in this bid document. The Contractor is responsible for disposal of trash and debris in accordance with all federal, state, and local laws, rules and regulations.

MOWING OF TURF GRASS AREAS

All turf grass areas within specified shall be cleaned of all trash and/or debris prior to mowing. Mowing of trash and debris to shred into smaller pieces is not allowed.

All turf grass areas shall be mowed as specified in this document. The grass shall not be cut so low as to damage or stress the grass and shall not be allowed to reach a height of six (6) inches or more unless otherwise requested by the City. Heights may vary per location. However, heights shall be as follows:

- St. Augustine –3-3.5 inches
- Argentine Bahia – 3 inches
- Bermuda and Zoysia – 1-2 inches

Areas where large mowers are impractical or where repeated tracks may cause ruts shall be serviced using small push mowers or string trimmers. In the event ruts and or divots are created or damage to the sod occurs, the contractor will be responsible for repairs to or replacement of the sod immediately. Mowing of wet turf grass shall be avoided unless permission is authorized by the City. The Contractor shall leave surrounding areas in a clean condition free of accumulated debris, including but not limited to grass clippings, after each mowing. Large clumps of clippings will be distributed by mechanical blowing or collected and removed. Materials removed from grounds shall be disposed of off-site by the Contractor in a lawful manner.

FERTILIZATION, DISEASE AND INSECT CONTROLS

All landscaped areas shall be treated as outlined below to maintain all turf grass in good, healthy appearance and color. An application schedule along with the specified products must be submitted and approved by the City prior to applications.

- **TURF GRASS FERTILIZATION** St. Augustine turf grass and Argentine Bahia grass shall receive two (2) pounds of nitrogen per 1,000 square feet during the growing season. Turf grass shall be fertilized two (2) times per year and no more than one (1) pound of nitrogen per 1,000 square feet shall be applied during each scheduled visit. In addition, a complete fertilizer shall be granular in composition and contain thirty to fifty percent (30% - 50%) or more of the nitrogen in a slow release form. The ratio of nitrogen to potash shall be 1:1 or 2:1. A complete fertilizer shall be applied twice per year in March and October.

- **DISEASE, INSECT, and WEED CONTROL** Contractor shall be responsible for the immediate control and identification of any insect or disease-causing organisms that may arise in any landscape area. Upon confirmation of a specific problem requiring treatment, pesticides shall be applied as needed on a spot treatment basis, whenever possible using the least toxic, effective pesticide. Fire Ant control at the Tactical, Handgun, and Rifle Range shall be applied once (1) annually. Spot treatment may need to be applied throughout the year upon request by the City. All applications of pesticides and fertilizations shall be performed when temperatures are below 90 degrees and wind drift is negligible. **All applicators shall have a State licensed, certified, operator on staff or use a City approved sub-contractor that is licensed and certified for pest control.**

MAINTENANCE OF CONCRETE AREAS

Concrete areas are including but not limited to, sidewalks, curbs and concrete areas around buildings. These areas shall be kept free of ALL debris including but not limited to grass clippings, grass remaining after edging, and crack grass growing in the concrete joints.

EDGING OF TURF GRASS

Contractor shall edge all appropriate surfaces with suitable mechanical equipment, i.e. a mechanical edger. In the event the service area is unable to be serviced with an edger, parking areas, walkways, fences, plant beds and tree wells, so that no grass, ground cover or weeds are left extending beyond or over the surface being edged. This includes edging between adjoining beds of dissimilar ground cover types. Edging should not be more than 3 inches from the mulch of plant beds and tree wells. **Chemical edging of plant beds and tree wells is not permitted.** Contractor shall leave surrounding areas in a clean condition free of accumulated debris, including but not limited to grass, after edging. This includes but

not limited to pavement, curbs, gutters, concrete medians, sidewalk joints, driveway joints, driveway aprons, mulch beds, rock beds, etc.

STRING TRIMMING OF TURF GRASS

Final string trimming around permanent objects such as metal posts and concrete curbing shall be accomplished with suitable mechanical equipment and at the same cutting heights as the rest of the turf areas. String trimming around tree trunks with mechanical devices is prohibited. Non-mechanical means must be utilized where string trimming may damage wooden posts, decorative light poles or other City property. Ponds, lakes, and ditches(swales) **MUST** be string trimmed to the water line.

Areas where crack grass is present, MUST be string trimmed (burned down) and then chemically sprayed with weed killer to deter new weed growth. This includes but not limited to pavement, curbs, gutters, concrete medians, sidewalk joints, driveway joints, driveway aprons, etc.

BLOWING OF DEBRIS AND TURF GRASS CUTTINGS

Contractor shall blow all appropriate surfaces with suitable mechanical equipment including, but not limited to roadways, driveways, curbs, parking areas, walkways, turf grass areas, plant beds and tree wells as required to leave the area clean and free of debris. Grass clippings and other organic debris **shall not** be blown into the roadway, ponds, lakes, or storm drains.

Clumping of turf grass is NOT permitted. If clumping occurs, the contractor MUST blow to disperse, mulch the clumping, or rake and remove the debris.

ADJUSTING AND REMOVING TREE STAKE KITS

Contractor is required to maintain all newly planted trees in a straight vertical position by adjusting tree stake kits as needed. The contractor shall also be responsible to completely remove all stake kits approximately six (6) months to one (1) year after initial planting. The contractor shall notify the City representative to advise of a defective stake kit for immediate replacement.

PRUNING OF ORNAMENTAL SHRUBS AND GROUNDCOVERS

Contractor shall prune and shape all ornamental shrubs and ground cover to maintain the natural form of the plant material and maintain its growth within the limitations of the plant bed, to eliminate damaged or diseased wood, and to provide sight distance requirements. **Pruning shall be performed monthly.**

All pruning shall be performed in accordance with the latest approved ANSI-A300 pruning standards.

REMOVING DEAD PLANT MATERIAL

Contractor shall remove and dispose of all dead ornamental trees, shrubs, and ground cover during each scheduled visit. The contractor is responsible to notify the City to determine if a replacement is necessary. The City will determine type/size of replacement. Contractor is only responsible to remove dead ornamental plants as directed by the City.

REPLACEMENT OF PLANT MATERIALS

The City will be responsible to replace all plant materials that are frozen, stolen, vandalized, or otherwise destroyed by unforeseen or unpreventable circumstances. **However, if the City**

determines that the poor condition of plant materials is due to improper maintenance, the Contractor shall be responsible for replacing such plant material at the Contractor's sole expense. The City shall be notified of plants or areas in distress. These areas need to be evaluated for plan of action and monitored by Contactor. No dead plant material shall remain in landscaping. All replacements shall be done within one (1) week of notification. The City inspector/representative shall approve all plant replacements, sizes and specifications.

EROSION

If there is noticeable erosion at any site, the Contractor shall immediately notify the City of its location. The Contractor shall be responsible for any erosion damage caused by contractor's equipment or performance of duties.

EQUIPMENT

The Contractor shall have on hand at all times and in good working order such equipment to permit the Contractor to adequately and efficiently perform its contractual duties. All equipment shall be kept in good repair, appearance, and in a sanitary and clean condition at all times. **All equipment shall be cleaned of any debris after each site use and prior to moving to another site to prevent transfer of unwanted weeds, grasses, and/or fungus.**

All vehicles shall have the name of the Contractor, business telephone number and the vehicle identification number not less than three (3) inches high on each side of the vehicle. The contractor may also place its corporate logo on the vehicles. No offensive or political stickers shall be affixed to any equipment utilized on City property. The Contractor shall supply the City with a listing of the vehicle numbers normally assigned to performance of duties and shall keep the list current.

All equipment shall be kept in good safe operating condition with sharp blades and no leaking of oil and gasoline.

EQUIPMENT STORAGE

The Contractor shall be responsible for storing all equipment and supplies off site. The City will not provide any storage space for the Contractor.

EQUIPMENT FUELING AND LUBRICATING

Mowers and power equipment shall be fueled and lubricated using proper tools and equipment. Any fuel or oil spills are the sole responsibility of the Contractor to clean up and / or remove at the Contractor's expense. Any damage to median plant material by such fuel or oil spills shall be replaced within three (3) days by Contractor at the Contractor's expense.

CONTRACTOR SCHEDULE

Contractor shall submit a calendar schedule of all work. A copy of the yearly calendar shall be submitted to the City. Contractor shall update the schedule based on shooting range activity and provide mow schedule to the City Inspector/Representative. The contractor **must** coordinate with the Police Shooting Range Manager for mow times. The use of noise making equipment is restricted to the hours of 7:00 a.m. to 7:00 p.m. daily.

SUPERVISION

The Contractor shall be responsible for all personnel and supervision required in performing work in accordance with these specifications. Supervision will be required for all working hours of the contract.

The Contractor shall comply with all City regulations.

Contractor shall notify the City (via fax, e-mail or in person) daily when the specified scheduled services are fully completed. This is to allow the City to inspect for contract compliance and authorization for scheduled payments. City approved representatives of the Contractor shall be available to meet with the City as required to accomplish the City's objectives. All meetings with the City will be at no charge.

CONTACT PERSON

The Contractor shall provide the name and telephone number of a contact person in case of an emergency. The Contractor shall provide the name and telephone number of a representative to meet periodically with the City. The City reserves the right to accept or reject any employee of the Contractor.

All personnel must be visible as Contractor's employee(s) by uniform while on City property. The Contractor's work force shall be neat and clean in appearance and shall wear identification. Identification shall include the employee's name and company name.

[Remainder of this page left intentionally blank]

SECTION 6 – SPECIAL CONDITIONS

PERIOD OF OFFER VALIDITY

Bids offered in this ITB must remain firm for a period of ninety (90) days from the ITB opening date.

CONTRACT TERM

The term of the contract shall be for an initial one (1) year with three (3) one (1) year renewal options agreed upon by both parties. Renewal will be approved by the City Manager and the budget will be approved by City Council.

EXTRAORDINARY OCCURRENCES

It is agreed that in no event shall the City or Contractor be liable or responsible to each other or any other person to perform work herein provided, where such stoppages or delays result from inclement weather, drought or excessive rain, acts of God, fire, or any other cause not within the control of the City and/or the Contractor.

CONTRACT PERFORMANCE

It is the intent of the City to ensure that the Contractor provides a quality level of landscape and ground maintenance services. All complaints will be reported to, and promptly resolved by the Contractor. The Contractor shall have twenty-four (24) hours to resolve any such complaints. The City may levy administrative charges for infractions by the Contractor at $100.00 per day per incident. Such infractions shall include, but not be limited to:

a) Failure to resolve complaints within twenty-four (24) hour period.
b) Failure to provide safe equipment.
c) Failure to provide required documentation in a timely and accurate manner.
d) Failure to report damage to irrigation system(s).
e) Failure to report property damage or personal injury.
f) Failure to remove all trash from site(s).
g) Failure to perform scheduled service.
h) Landscape employees not adhering to uniform/protective clothing requirements.

For the purpose of this section, the City may deduct any charges from payments due the Contractor. The City shall notify the Contractor in writing of any action to be taken. In the event the Contractor wishes to contest such assessment, the contractor shall submit a written protest within five (5) days after receiving such notice for an opportunity to be heard by the City and present a defense to such assessment. The City will notify the Contractor in writing of any action taken with respect to Contractor's claims. The decision of the City shall be final.

Based on limited funds, the City may eliminate certain contracted areas or groups in order to stay within the budget. The City may, at its discretion, add or delete similar sized areas as a result of construction or unanticipated impacts. Therefore, the City reserves the right to reject any and all the bids, eliminate areas from the contract and/or reduce maintenance to any given area when it is in the City's best interest.

INVOICING

Payment shall be determined monthly based on sites inspected and verified. A template will be provided to the contractor, from the City, by Excel format. The template will detail and itemize the contractor's service areas for the month.

DEDUCTIONS will occur if areas are not completed upon inspection and invoice has been submitted.

ELIGIBILITY OF VENDOR

To be eligible to respond to this ITB, the Vendors must have prior experience working with the services described in this ITB. Please provide eligibility experience with your submittal.

NOTICE

The City reserves the right to consider cooperative contracts, federal, state municipal etc.; in the evaluation process. If in the City's best interest, the City may utilize a cooperative contract in lieu of making an award.

BID BOND

A certified check or bank draft, payable to the City of Port Orange, Florida or a satisfactory bid bond executed by the Bidder and an acceptable surety, in an amount equal to five percent (5%) of the bid shall be submitted with each bid.

PAYMENT & PERFORMANCE BOND

Upon award, the successful bidder will also be required to furnish and pay for a satisfactory contract one hundred percent (100%) Payment and Performance Bond to be recorded by the City, with the Clerk of the Circuit Court, Volusia County, Florida and to enter into a contract for services with the City of Port Orange. After recording, the City will furnish to the contractor the recording information for the bond to evidence that the contractor has met the requirement of Florida law. The City will bill the cost of recording to the contractor.

LICENSES AND PERMITS

Contractor is responsible for all applicable local and state licenses, permits and fees.

[Remainder of this page left intentionally blank]

EXHIBIT "2"

Payment and Performance Bond

Consisting of 4 Pages

FRONT PAGE FOR BOND REQUIRED BY SECTION 255.05, F.S.

PAYMENT AND PERFORMANCE BOND

(Public Works)

Notice and Time Limitations Must Be In Accordance
With Section 255.05(2), (8) and (10), Florida Statutes

BOND NO. _____

PRINCIPAL:

Developer or Contractor:	G&G Outdoors, LLC
Principal Business Address:	4059 Quail Nest Lane New Smyrna Beach, Florida 32168
Contact Person:	Ander M. Goiriena, Managing Member
Phone Number:	(386) 631-4008

SURETY:

Address:	_____
	_____
	_____
Contact Person:	_____
Phone Number:	_____

OWNER:

	City of Port Orange, Florida, a chartered municipal corporation 1000 City Center Circle Port Orange, Florida 32129-4144
Contact Person:	City Manager
Phone Number:	(386) 506-5501

Amount: $22,400.00 **City Case/ ITB 20-17 Landscape Maintenance Services for Police Shooting Range**

Description of Work: ITB 20-17 Landscape Maintenance Services for Police Shooting Range

Project Location: City of Port Orange Police Shooting Range, Pioneer Trail, New Smyrna Beach, Volusia County, Florida 32168.

Legal Description: Portions of Tax Parcel ID Number: 72-10-00-00-0010.
Pioneer Trail, New Smyrna Beach, Volusia County, Florida 32168
See Exhibit "A"

Front Page

All other pages are subsequent to this page regardless of any numbers that may be printed thereon.

[CA7285] [MTR/sal 2015-02-10]

City of Port Orange Police Department Shooting Range
Pioneer Trail, New Smyrna Beach, Volusia County, Florida 32168

Tax Parcel ID:
72-10-00-00-0010

Legal Description:
A portion of the Parcel ID listed above.

EXHIBIT "A"

G&G Outdoors, LLC

ITB 20-17 Landscape Maintenance Services for Police Shooting Range

Bond No._____

COMBINATION PAYMENT AND PERFORMANCE BOND FOR PUBLIC CONSTRUCTION

per Section 255.05, Florida Statutes

Guaranty for Construction of Public Improvements

BY THIS BOND, We, **G&G Outdoors, LLC,** as Principal, and _____, a corporation, as Surety, are bound to **CITY OF PORT ORANGE, FLORIDA**, a Florida municipal corporation, herein called "Owner" or sometimes referred to as "City," in the sum of **TWENTY-TWO THOUSAND FOUR HUNDRED AND 00/100 DOLLARS ($22,400.00)**, for payment of which we bind ourselves, our heirs, personal representatives, successors, and assigns, jointly and severally.

THE CONDITION OF THIS BOND is that if Principal:

1. Performs the terms of that certain Standard Contract for Services, having an effective date of _____, 2020, entered into by and between the Principal and the City, for City Landscape Maintenance at the Police Shooting Range, hereinafter referred to as the "Contract," being made a part of this bond by reference, at the times and in the manner prescribed in the Contract; and

2. Promptly makes payments to all claimants, as defined in Section 255.05(1), Florida Statutes, supplying Principal with labor, materials, or supplies, used directly or indirectly by Principal in the prosecution of the work provided for in the Contract (the "Work"); and

3. Pays Owner all losses, damages, delay damages (including contractually authorized liquidated damages), expenses, costs, and attorney's fees, including appellate proceedings, that Owner sustains because of a breach or material breach by Principal under the Contract documents; and

4. Performs the guarantee of all work and materials furnished under the Contract for the time specified in the Contract, then this bond is void; otherwise it remains in full force.

Notice of Nonpayment and Time Limitations

Any action instituted by a claimant under this bond for payment must be in accordance with the notice and time limitation provisions in Sections 255.05(2), (8) and (10), Florida Statutes.

Any changes in or under the contract documents and compliance or noncompliance with any formalities connected with the contract or the changes does not affect Surety's obligation under this bond.

IN WITNESS WHEREOF, this performance and payment bond is executed and shall be deemed an original, this _____, day of _____, 2020.

Attest:

G&G OUTDOORS, LLC
(Principal)

_____
(As to Corporate Principal) Secretary

By:_____
Ander M. Goiriena, Managing Member

_____
(Witness to Principal)

(Corporate Seal)

_____
(Surety)

_____
(Witness to Surety)

By:_____
Name:_____
(Attorney-in-Fact)

(Corporate Seal)

NOTE: ***Date of BOND must not be prior to date of Contract.*** *If Developer/Principal is Partnership, all partners should execute BOND. All BONDS signed by an agent must be accompanied by a certified copy of the authority to act.*

IMPORTANT: Surety companies executing BONDS must appear on the Treasury Department's most current list (Circular 570 as amended) and be authorized to transact business in the State of Florida.

CERTIFICATE OF LIABILITY INSURANCE

DATE (MM/DD/YYYY) 10/07/2021

THIS CERTIFICATE IS ISSUED AS A MATTER OF INFORMATION ONLY AND CONFERS NO RIGHTS UPON THE CERTIFICATE HOLDER. THIS CERTIFICATE DOES NOT AFFIRMATIVELY OR NEGATIVELY AMEND, EXTEND OR ALTER THE COVERAGE AFFORDED BY THE POLICIES BELOW. THIS CERTIFICATE OF INSURANCE DOES NOT CONSTITUTE A CONTRACT BETWEEN THE ISSUING INSURER(S), AUTHORIZED REPRESENTATIVE OR PRODUCER, AND THE CERTIFICATE HOLDER.

IMPORTANT: If the certificate holder is an ADDITIONAL INSURED, the policy(ies) must be endorsed. If SUBROGATION IS WAIVED, subject to the terms and conditions of the policy, certain policies may require an endorsement. A statement on this certificate does not confer rights to the certificate holder in lieu of such endorsement(s).

PRODUCER

Smith & Associates Insurance Agency, Inc.
PO Box 1578
New Smyrna Beach, FL 32170

CONTACT NAME: Autumn Scarsella
PHONE (A/C, No, Ext): 386-409-8004 FAX (A/C, No): 386-409-0012
E-MAIL ADDRESS: Autumn@smithinsagencyinc.com

INSURER(S) AFFORDING COVERAGE	NAIC #
INSURER A : Cypress Property & Casualty Insurance	10953
INSURER B : Markel Insurance Company	38970
INSURER C :	
INSURER D :	
INSURER E :	
INSURER F :	

INSURED

G&G Outdoors, LLC
4059 Quail Nest Lane
New Smyrna Beach, FL 32168

COVERAGES **CERTIFICATE NUMBER:** **REVISION NUMBER:**

THIS IS TO CERTIFY THAT THE POLICIES OF INSURANCE LISTED BELOW HAVE BEEN ISSUED TO THE INSURED NAMED ABOVE FOR THE POLICY PERIOD INDICATED. NOTWITHSTANDING ANY REQUIREMENT, TERM OR CONDITION OF ANY CONTRACT OR OTHER DOCUMENT WITH RESPECT TO WHICH THIS CERTIFICATE MAY BE ISSUED OR MAY PERTAIN, THE INSURANCE AFFORDED BY THE POLICIES DESCRIBED HEREIN IS SUBJECT TO ALL THE TERMS, EXCLUSIONS AND CONDITIONS OF SUCH POLICIES. LIMITS SHOWN MAY HAVE BEEN REDUCED BY PAID CLAIMS.

INSR LTR	TYPE OF INSURANCE	ADDL INSD	SUBR WVD	POLICY NUMBER	POLICY EFF (MM/DD/YYYY)	POLICY EXP (MM/DD/YYYY)	LIMITS	
A	X COMMERCIAL GENERAL LIABILITY CLAIMS-MADE / X OCCUR GEN'L AGGREGATE LIMIT APPLIES PER: X POLICY / PRO-JECT / LOC OTHER:	X	X	SGL00639200681	06/23/2021	06/23/2022	EACH OCCURRENCE	$ 1,000,000
							DAMAGE TO RENTED PREMISES (Ea occurrence)	$ 100,000
							MED EXP (Any one person)	$ 5,000
							PERSONAL & ADV INJURY	$ 2,000,000
							GENERAL AGGREGATE	$ 1,000,000
							PRODUCTS - COMP/OP AGG	$ 2,000,000
								$
	AUTOMOBILE LIABILITY ANY AUTO ALL OWNED AUTOS / SCHEDULED AUTOS HIRED AUTOS / NON-OWNED AUTOS						COMBINED SINGLE LIMIT (Ea accident)	$
							BODILY INJURY (Per person)	$
							BODILY INJURY (Per accident)	$
							PROPERTY DAMAGE (Per accident)	$
							Bodily Injury/Property Damage	$
	UMBRELLA LIAB / OCCUR EXCESS LIAB / CLAIMS-MADE DED / RETENTION $						EACH OCCURRENCE	$
							AGGREGATE	$
								$
B	WORKERS COMPENSATION AND EMPLOYERS' LIABILITY ANY PROPRIETOR/PARTNER/EXECUTIVE OFFICER/MEMBER EXCLUDED? Y / N (Mandatory in NH) If yes, describe under DESCRIPTION OF OPERATIONS below	N / A	X	MWC0174457-02	09/21/2021	09/21/2022	X PER STATUTE / OTH-ER	
							E.L. EACH ACCIDENT	$ 500,000
							E.L. DISEASE - EA EMPLOYEE	$ 500,000
							E.L. DISEASE - POLICY LIMIT	$ 500,000

DESCRIPTION OF OPERATIONS / LOCATIONS / VEHICLES (ACORD 101, Additional Remarks Schedule, may be attached if more space is required)

Lawn Care Services

CERTIFICATE HOLDER

CITY OF PORT ORANGE
1000 CITY CENTER CIRCLE
PORT ORANGE, FL 32129

CANCELLATION

SHOULD ANY OF THE ABOVE DESCRIBED POLICIES BE CANCELLED BEFORE THE EXPIRATION DATE THEREOF, NOTICE WILL BE DELIVERED IN ACCORDANCE WITH THE POLICY PROVISIONS.

AUTHORIZED REPRESENTATIVE

Autumn Scarsella *Autumn Scarsella* W056088

© 1988-2014 ACORD CORPORATION. All rights reserved.

The ACORD name and logo are registered marks of ACORD

VEHICLE OR EQUIPMENT CERTIFICATE OF INSURANCE

DATE (MM/DD/YYYY) 10/07/2021

THIS CERTIFICATE IS ISSUED AS A MATTER OF INFORMATION ONLY AND CONFERS NO RIGHTS UPON THE CERTIFICATE HOLDER. THIS CERTIFICATE DOES NOT AFFIRMATIVELY OR NEGATIVELY AMEND, EXTEND OR ALTER THE COVERAGE AFFORDED BY THE POLICIES BELOW. THIS CERTIFICATE OF INSURANCE DOES NOT CONSTITUTE A CONTRACT BETWEEN THE ISSUING INSURER(S), AUTHORIZED REPRESENTATIVE OR PRODUCER, AND THE CERTIFICATE HOLDER.

This form is used to report coverages provided to a single specific vehicle or equipment. Do not use this form to report liability coverage provided to multiple vehicles under a single policy. Use ACORD 25 for that purpose.

PRODUCER

StateFarm

JOSE CASTILLON
3460 RIDGEWOOD AVE SUITE B
PORT ORANGE, FL. 32129

CONTACT NAME: RAE CARTER
PHONE (A/C, No, Ext): 386-761-2111 FAX (A/C, No): 386-756-5647
E-MAIL ADDRESS: RAE.A.CARTER.H0NZ@STATEFARM.COM
PRODUCER CUSTOMER ID #: 59-6799

INSURED

ANDER GOIRIENA
4059 QUAIL NEST LN
NEW SMYRNA BEACH, FL. 32168

INSURER(S) AFFORDING COVERAGE	NAIC #
INSURER A : State Farm Fire and Casualty Company	25143
INSURER B :	
INSURER C :	
INSURER D :	
INSURER E :	

DESCRIPTION OF VEHICLE OR EQUIPMENT

YEAR	MAKE / MANUFACTURER	MODEL	BODY TYPE	VEHICLE IDENTIFICATION NUMBER
2010	FORD	F150	PICKUP	1FTEX1EWXAFD73534
DESCRIPTION			VEHICLE/EQUIPMENT VALUE $	SERIAL NUMBER

COVERAGES

CERTIFICATE NUMBER: **REVISION NUMBER:**

THIS IS TO CERTIFY THAT THE POLICY(IES) OF INSURANCE LISTED BELOW HAS/HAVE BEEN ISSUED TO THE INSURED NAMED ABOVE FOR THE POLICY PERIOD(S) INDICATED, NOTWITHSTANDING ANY REQUIREMENT, TERM OR CONDITION OF ANY CONTRACT OR OTHER DOCUMENT WITH RESPECT TO WHICH THIS CERTIFICATE MAY BE ISSUED OR MAY PERTAIN, THE INSURANCE AFFORDED BY THE POLICY(IES) DESCRIBED HEREIN IS/ARE SUBJECT TO ALL THE TERMS, EXCLUSIONS AND CONDITIONS OF SUCH POLICY(IES).

INSR LTR	ADD'L INSRD	TYPE OF INSURANCE	POLICY NUMBER	POLICY EFFECTIVE DATE (MM/DD/YYYY)	POLICY EXPIRATION DATE (MM/DD/YYYY)	LIMITS	
		X VEHICLE LIABILITY	J40 2510-F09-59 -001	06/09/2021	12/09/2021	COMBINED SINGLE LIMIT	$
						BODILY INJURY (Per person)	$ 1,000,000
						BODILY INJURY (Per accident)	$ 1,000,000
						PROPERTY DAMAGE	$ 1,000,000
		GENERAL LIABILITY				EACH OCCURENCE	$
		OCCURRENCE				GENERAL AGGREGATE	$
		CLAIMS MADE					$

INSR LTR	LOSS PAYEE	TYPE OF INSURANCE	POLICY NUMBER	POLICY EFFECTIVE DATE (MM/DD/YYYY)	POLICY EXPIRATION DATE (MM/DD/YYYY)	LIMITS / DEDUCTIBLE		
		VEH COLLISION LOSS				ACV / AGREED AMT	$	LIMIT
						STATED AMT	$	DED
		VEH COMP / VEH OTC				ACV / AGREED AMT	$	LIMIT
						STATED AMT	$	DED
		EQUIPMENT				ACV / AGREED AMT	$	LIMIT
		BASIC / BROAD				RC / STATED AMT	$	DED
		SPECIAL						

REMARKS (INCLUDING SPECIAL CONDITIONS / OTHER COVERAGES) (Attach ACORD 101, Additional Remarks Schedule, if more space is required)

ADDITIONAL INTEREST

Select one of the following:

X The additional interest described below has been added to the policy(ies) listed herein by policy number(s).
A request has been submitted to add the additional interest described below to the policy(ies) listed herein by policy number(s).

VEHICLE / EQUIPMENT INTEREST: LEASED FINANCED

NAME AND ADDRESS OF ADDITIONAL INTEREST

CITY OF PORT ORANGE
1000 CITY CENTER CIRCLE
PORT ORANGE, FL. 32129

CANCELLATION

SHOULD ANY OF THE ABOVE DESCRIBED POLICIES BE CANCELLED BEFORE THE EXPIRATION DATE THEREOF, NOTICE WILL BE DELIVERED IN ACCORDANCE WITH THE POLICY PROVISIONS.

DESCRIPTION OF THE ADDITIONAL INTEREST

X ADDITIONAL INSURED LOSS PAYEE
LENDER'S LOSS PAYEE

LOAN / LEASE NUMBER

AUTHORIZED REPRESENTATIVE

Rae Carter

© 1997-2015 ACORD CORPORATION. All rights reserved.

The ACORD name and logo are registered marks of ACORD

CERTIFICATE OF LIABILITY INSURANCE

DATE (MM/DD/YYYY) 12/13/2021

THIS CERTIFICATE IS ISSUED AS A MATTER OF INFORMATION ONLY AND CONFERS NO RIGHTS UPON THE CERTIFICATE HOLDER. THIS CERTIFICATE DOES NOT AFFIRMATIVELY OR NEGATIVELY AMEND, EXTEND OR ALTER THE COVERAGE AFFORDED BY THE POLICIES BELOW. THIS CERTIFICATE OF INSURANCE DOES NOT CONSTITUTE A CONTRACT BETWEEN THE ISSUING INSURER(S), AUTHORIZED REPRESENTATIVE OR PRODUCER, AND THE CERTIFICATE HOLDER.

IMPORTANT: If the certificate holder is an ADDITIONAL INSURED, the policy(ies) must have ADDITIONAL INSURED provisions or be endorsed. If SUBROGATION IS WAIVED, subject to the terms and conditions of the policy, certain policies may require an endorsement. A statement on this certificate does not confer rights to the certificate holder in lieu of such endorsement(s).

PRODUCER
AssuredPartners of SC, LLC - Columbia
PO Box 21627
Columbia, SC 29221-1627

CONTACT NAME: Hunt Club Unit
PHONE (A/C, No, Ext): (866) 782-6330 FAX (A/C, No): (317) 576-9521
E-MAIL ADDRESS:

INSURER(S) AFFORDING COVERAGE	NAIC #
INSURER A : HDI Global Insurance Company	41343
INSURER B :	
INSURER C :	
INSURER D :	
INSURER E :	
INSURER F :	

INSURED
American Hunting Lease Association
10412 Allisonville Road, Suite 110
Fishers, IN 46038

COVERAGES CERTIFICATE NUMBER: REVISION NUMBER:

THIS IS TO CERTIFY THAT THE POLICIES OF INSURANCE LISTED BELOW HAVE BEEN ISSUED TO THE INSURED NAMED ABOVE FOR THE POLICY PERIOD INDICATED. NOTWITHSTANDING ANY REQUIREMENT, TERM OR CONDITION OF ANY CONTRACT OR OTHER DOCUMENT WITH RESPECT TO WHICH THIS CERTIFICATE MAY BE ISSUED OR MAY PERTAIN, THE INSURANCE AFFORDED BY THE POLICIES DESCRIBED HEREIN IS SUBJECT TO ALL THE TERMS, EXCLUSIONS AND CONDITIONS OF SUCH POLICIES. LIMITS SHOWN MAY HAVE BEEN REDUCED BY PAID CLAIMS.

INSR LTR	TYPE OF INSURANCE	ADDL INSD	SUBR WVD	POLICY NUMBER	POLICY EFF (MM/DD/YYYY)	POLICY EXP (MM/DD/YYYY)	LIMITS	
A	X COMMERCIAL GENERAL LIABILITY			GG19H000038-02	12/01/2021	12/01/2022	EACH OCCURRENCE	$ 1,000,000
	CLAIMS-MADE / X OCCUR						DAMAGE TO RENTED PREMISES (Ea occurrence)	$ 100,000
							MED EXP (Any one person)	$ 5,000
							PERSONAL & ADV INJURY	$ 1,000,000
	GEN'L AGGREGATE LIMIT APPLIES PER:						GENERAL AGGREGATE	$ 2,000,000
	POLICY / PRO-JECT / X LOC						PRODUCTS - COMP/OP AGG	$ 0
	OTHER:							$
	AUTOMOBILE LIABILITY						COMBINED SINGLE LIMIT (Ea accident)	$
	ANY AUTO						BODILY INJURY (Per person)	$
	OWNED AUTOS ONLY / SCHEDULED AUTOS						BODILY INJURY (Per accident)	$
	HIRED AUTOS ONLY / NON-OWNED AUTOS ONLY						PROPERTY DAMAGE (Per accident)	$
								$
	UMBRELLA LIAB / OCCUR						EACH OCCURRENCE	$
	EXCESS LIAB / CLAIMS-MADE						AGGREGATE	$
	DED / RETENTION $							$
	WORKERS COMPENSATION AND EMPLOYERS' LIABILITY						PER STATUTE / OTH-ER	
	ANY PROPRIETOR/PARTNER/EXECUTIVE OFFICER/MEMBER EXCLUDED? (Mandatory in NH) Y / N	N / A					E.L. EACH ACCIDENT	$
	If yes, describe under DESCRIPTION OF OPERATIONS below						E.L. DISEASE - EA EMPLOYEE	$
							E.L. DISEASE - POLICY LIMIT	$

DESCRIPTION OF OPERATIONS / LOCATIONS / VEHICLES (ACORD 101, Additional Remarks Schedule, may be attached if more space is required)

CERTIFICATE HOLDER IS A NAMED INSURED PER LEASE AGREEMENT WITH THE FOLLOWING:
ID50817 Effective: 12/14/2021: 7311 Acres Individually, 1839 Acres Jointly, 1839 Acres Jointly/Volusia County, FL - G&G Hunt Club: Ander Goiriena

CERTIFICATE HOLDER

City of Port Orange
1000 City Center Circle
Port Orange, FL 32129

OK

CANCELLATION

SHOULD ANY OF THE ABOVE DESCRIBED POLICIES BE CANCELLED BEFORE THE EXPIRATION DATE THEREOF, NOTICE WILL BE DELIVERED IN ACCORDANCE WITH THE POLICY PROVISIONS.

AUTHORIZED REPRESENTATIVE

© 1988-2015 ACORD CORPORATION. All rights reserved.
The ACORD name and logo are registered marks of ACORD

CERTIFICATE OF LIABILITY INSURANCE

DATE (MM/DD/YYYY): 12/20/2021

THIS CERTIFICATE IS ISSUED AS A MATTER OF INFORMATION ONLY AND CONFERS NO RIGHTS UPON THE CERTIFICATE HOLDER. THIS CERTIFICATE DOES NOT AFFIRMATIVELY OR NEGATIVELY AMEND, EXTEND OR ALTER THE COVERAGE AFFORDED BY THE POLICIES BELOW. THIS CERTIFICATE OF INSURANCE DOES NOT CONSTITUTE A CONTRACT BETWEEN THE ISSUING INSURER(S), AUTHORIZED REPRESENTATIVE OR PRODUCER, AND THE CERTIFICATE HOLDER.

IMPORTANT: If the certificate holder is an ADDITIONAL INSURED, the policy(ies) must have ADDITIONAL INSURED provisions or be endorsed. If SUBROGATION IS WAIVED, subject to the terms and conditions of the policy, certain policies may require an endorsement. A statement on this certificate does not confer rights to the certificate holder in lieu of such endorsement(s).

PRODUCER
Town & Country Insurance Agency
1525 Herbert St. Ste 106
Port Orange FL 32129

CONTACT NAME: Travis Tritten
PHONE (A/C, No, Ext): 386-767-0147 FAX (A/C, No): 386-767-5075
E-MAIL ADDRESS: team@townco1.com

INSURER(S) AFFORDING COVERAGE	NAIC #
INSURER A: Colony Insurance Company	
INSURER B: United Stated Liability Insuranc Compasny	
INSURER C:	
INSURER D:	
INSURER E:	
INSURER F:	

INSURED
G & G Outdoors LLC
G & G Hunt Club
4059 Quail Nest Ln
New Smyrna Beach FL 32168

COVERAGES **CERTIFICATE NUMBER:** **REVISION NUMBER:**

THIS IS TO CERTIFY THAT THE POLICIES OF INSURANCE LISTED BELOW HAVE BEEN ISSUED TO THE INSURED NAMED ABOVE FOR THE POLICY PERIOD INDICATED. NOTWITHSTANDING ANY REQUIREMENT, TERM OR CONDITION OF ANY CONTRACT OR OTHER DOCUMENT WITH RESPECT TO WHICH THIS CERTIFICATE MAY BE ISSUED OR MAY PERTAIN, THE INSURANCE AFFORDED BY THE POLICIES DESCRIBED HEREIN IS SUBJECT TO ALL THE TERMS, EXCLUSIONS AND CONDITIONS OF SUCH POLICIES. LIMITS SHOWN MAY HAVE BEEN REDUCED BY PAID CLAIMS.

INSR LTR	TYPE OF INSURANCE	ADDL INSD	SUBR WVD	POLICY NUMBER	POLICY EFF (MM/DD/YYYY)	POLICY EXP (MM/DD/YYYY)	LIMITS	
A	COMMERCIAL GENERAL LIABILITY CLAIMS-MADE / OCCUR X Pollution GEN'L AGGREGATE LIMIT APPLIES PER: POLICY / PRO-JECT / LOC OTHER:	Y		PP220187	08/28/2021	08/28/2022	EACH OCCURRENCE	$
							DAMAGE TO RENTED PREMISES (Ea occurrence)	$
							MED EXP (Any one person)	$
							PERSONAL & ADV INJURY	$
							GENERAL AGGREGATE	$
							PRODUCTS - COMP/OP AGG	$
							pollution	$ 1,000,000
	AUTOMOBILE LIABILITY ANY AUTO OWNED AUTOS ONLY / SCHEDULED AUTOS HIRED AUTOS ONLY / NON-OWNED AUTOS ONLY						COMBINED SINGLE LIMIT (Ea accident)	$
							BODILY INJURY (Per person)	$
							BODILY INJURY (Per accident)	$
							PROPERTY DAMAGE (Per accident)	$
								$
	UMBRELLA LIAB / OCCUR EXCESS LIAB / CLAIMS-MADE DED / RETENTION $						EACH OCCURRENCE	$
							AGGREGATE	$
								$
	WORKERS COMPENSATION AND EMPLOYERS' LIABILITY ANYPROPRIETOR/PARTNER/EXECUTIVE OFFICER/MEMBER EXCLUDED? Y / N (Mandatory in NH) If yes, describe under DESCRIPTION OF OPERATIONS below	N / A					PER STATUTE / OTH-ER	
							E.L. EACH ACCIDENT	$
							E.L. DISEASE - EA EMPLOYEE	$
							E.L. DISEASE - POLICY LIMIT	$
B	Directors & Officers			NDO1581024B	8/28/2021	8/28/2022	Limit	$500.000

DESCRIPTION OF OPERATIONS / LOCATIONS / VEHICLES (ACORD 101, Additional Remarks Schedule, may be attached if more space is required)

CERTIFICATE HOLDER

City of Port Orange
1000 City Center Pkwy
Port Orange FL 32129

CANCELLATION

SHOULD ANY OF THE ABOVE DESCRIBED POLICIES BE CANCELLED BEFORE THE EXPIRATION DATE THEREOF, NOTICE WILL BE DELIVERED IN ACCORDANCE WITH THE POLICY PROVISIONS.

AUTHORIZED REPRESENTATIVE

© 1988-2015 ACORD CORPORATION. All rights reserved.

The ACORD name and logo are registered marks of ACORD

CITY COUNCIL AGENDA ITEM

COUNCIL MEETING DATE 9/20/2022

SUBJECT: (C8b) Approval of Amendment No. 2 to the Standard Contract for Services with Sparks Concrete, LLC (CA6825) under ITB #19-02 Concrete Installation, Repairs, and Replacement

DEPARTMENT: Public Works

GOAL: 2 - Infrastructure

RECOMMENDED MOTION: Move to approve Amendment No. 2 to the Standard Contract for Services (CA6825) for Sparks Concrete LLC and authorize the Mayor and City Clerk to execute all necessary documents.

SUMMARY: On March 22, 2019, the City entered a Standard Contract for Services with Sparks Concrete LLC pursuant to ITB 19-02, Concrete Installation, Repairs, and Replacement. This bid was issued twice due to the low number of responses. In the second advertisement, only two companies submitted bids. One was deemed non-responsive. The initial term of the contract was March 22, 2019 to March 21, 2021, with the option to renew up to two, one-year terms subject to review and approval by the City Manager.

A Renewal Form was executed to renew the contract for the first, one-year term, March 22, 2021, to March 21, 2022, at the same pricing, terms, and conditions. The city also piggybacked two other concrete companies from Volusia County in a bid to catch up on many of the sidewalk jobs. Unfortunately, those companies could not do the work in a timely manner. One company removed various concrete sidewalk panels and set up new forms, but never returned to pour the concrete. When called, they never responded other than to remove their forms from the site. The second company could not perform the volume of work the city needed. Therefore, the purchase orders to both companies were voided.

On March 4, 2022, the City Manager approved Amendment and Renewal No. 2 for a price adjustment for the second one-year renewal. Due to increased costs in overhead expenses, the vendor received the increase. Staff researched the price of various other communities' contracts and that increase was consistent with or less than what the neighboring communities were paying. The request is also consistent with the CPI for cement finishing.

On June 22, 2022, the City received notification of a second price increase request for the current term, again due to increased costs in overhead expenses. The increased cost still remains consistent with or less than neighboring communities.

This is the final one-year renewal period for this contract and the annual spending authority is limited to the budgeted amount as approved by Port Orange City Council for the then-current fiscal year. Various departments utilize this contract as well for their own projects and needs. Sparks Concrete has performed well for the city for many years.

PRESENTER: Lynn Stevens

ATTACHMENTS:

1.	Sparks Concrete LLC Amendment 2	Revised Sparks Concrete LLC Amendment 2.pdf
2.	Justification memo - Sparks Concrete CA6825 Amend No 2 - price increase	Justification memo - Sparks Concrete CA6825 Amend No 2 - price increase.docx
3.	SPARKS CONCRETE, LLC - CA6825	SPARKS CONCRETE, LLC - CA6825.pdf
4.	City of Port Orange Notice of Price Increases for Annual Contract	City of Port Orange Notice of Price Increases for Annual Contract .pdf
5.	Amendment & Renewal No. 2 Sparks Concrete, LLC CA6825	Amendment & Renewal No. 2 Sparks Concrete, LLC CA6825.pdf
6.	Sparks Request for Contract Price Increase	Sparks Request for Contract Price Increase.pdf

Kelly Klausky	Created/Initiated - 8/19/2022
Julia Wiggins	Approved - 8/19/2022
Richard Colby	Approved - 8/19/2022
Tom DiEulio	Approved - 8/24/2022
Ronny Buttrum	Approved - 8/24/2022
Lynn Stevens	Approved - 8/26/2022
John McKinney	Approved - 8/31/2022
Matthew Jones	Approved - 9/8/2022
Wayne Clark	Approved - 9/8/2022
Robin Fenwick	Final Approval - 9/8/2022

AMENDMENT NO. 2

THIS AMENDMENT NO. 2 ("2022 Amendment") is made and entered into the day and year set forth hereinafter by and between the **CITY OF PORT ORANGE, FLORIDA**, a Florida municipal corporation located at 1000 City Center Circle, Port Orange, Volusia County, Florida 32129-4144 (the "City"), and **SPARKS CONCRETE, LLC** ("Contractor") a Florida limited liability company with its principal place of business at 4106 South Nova Road, Port Orange, Florida 32127. The City and the Contractor are hereinafter collectively referred to as the "Parties."

WHEREAS, on the 22nd day March of 2019, the Parties entered into a contract pursuant to Invitation to Bid 19-02 ("ITB 19-02") for concrete installation, repairs and replacement of existing Portland cement concrete structures, including but not limited to sidewalks, driveway aprons, curbs, gutters and bike paths on an as needed basis ("Contract"), having an initial term commencing on March 22, 2019 and continuing until March 21, 2021, with two (2) one-year renewals upon written mutual agreement of the Parties, subject to the review and approval of the City Manager; and

WHEREAS, on the 3rd day of February 2021, the Parties exercised the first renewal option and renewed the Contract via the City of Port Orange Renewal Form, with a renewal term commencing on March 22, 2021 and continuing until to March 21, 2022; and

WHEREAS, on the 4th day of March 2022, the Parties utilized the second and final renewal option to renew the Contract for a term, notwithstanding the date of execution, to commence on March 22, 2022 and continue until March 21, 2023; and

WHEREAS, on the 4th day of March 2022, the Parties amended Exhibit "1" "Schedule of Unit Pricing" of the Contract to allow a price adjustment due to increased costs in overall expenses, limited to budget appropriation; and

WHEREAS, the Parties desire to amend Exhibit "1" "Schedule of Unit Pricing" of the Contract to allow for a price adjustment due to increased costs of labor and fuel, limited to budget appropriation; and

WHEREAS, the Port Orange City Council has determined that the execution of this 2022 Amendment is beneficial to the citizens of the City of Port Orange.

NOW, THEREFORE, the Parties, for good and valuable consideration, the receipt and sufficiency of which are hereby acknowledged, agree as follows:

1. The foregoing recitals are true and correct and incorporated herein.

2. *Exhibit "1"*. Exhibit "1" "Schedule of Unit Pricing" is hereby deleted in its entirety and replaced with Sparks Concrete, LLC Price Increase dated June 22, 2022, due to increased costs of labor and fuel.

3. *Counterparts*. This 2022 Amendment may be executed in one or more counterparts, each of which shall be deemed to be an original but all of which together shall constitute one and the same instrument. The delivery by facsimile or e-mail of an executed copy of this 2022 Amendment shall be deemed valid as if an original signature was delivered. No contract shall be formed between Contractor and the City until the City signs this 2022 Amendment.

4. All other terms and conditions of the Contract shall remain in full force and effect.

IN WITNESS WHEREOF, the Parties hereto have signed, sealed, and delivered this 2022 Amendment on the day and year stated hereinafter.

Witnesses:

SPARKS CONCRETE, LLC

By:_____
William C. Sparks, Managing Member

If this Agreement is signed by an individual not identified as the Manager of the company in the records of the Florida Department of State, Division of Corporations, or other legally authorized person, then please provide written authorization for that individual to enter into contracts on behalf of the company.

_____
Printed Name:_____

Date:_____

_____
Printed Name:_____

STATE OF FLORIDA
COUNTY OF VOLUSIA

The foregoing instrument was acknowledged before me by means of _____ physical presence or _____ online notarization, this _____ day of _____, 2022, by William C. Sparks, as Managing Member of Spars Concrete, LLC, a Florida limited liability company. He is _____ personally known or _____ produced _____as identification.

_____
Notary Public, State of Florida
Printed, typed or stamped name, commission and expiration:

Witnesses:

CITY OF PORT ORANGE

_____
Printed Name:_____

By:_____
Donald O. Burnette

_____
Printed Name:_____

Date:_____

STATE OF FLORIDA
COUNTY OF VOLUSIA

The foregoing instrument was acknowledged before me by means of ____ physical presence or _____ online notarization, this _____ day of _____, 2022, by Donald O. Burnette, as Mayor of the City of Port Orange, a Florida municipal corporation, on behalf of the city. He is ____ personally known or ____ produced _____as identification.

_____
Notary Public, State of Florida
Printed, typed or stamped name, commission and expiration:

Witnesses:

ATTEST:

_____
Printed Name:_____

By:_____
Robin L. Fenwick, MMC, City Clerk

_____
Printed Name:_____

Date:_____

STATE OF FLORIDA
COUNTY OF VOLUSIA

The foregoing instrument was acknowledged before me, by means of ___ physical presence or ____ online notarization, this _____ day of _____, 2022, by Robin L. Fenwick, as City Clerk of the City of Port Orange, a Florida municipal corporation, on behalf of the city. She is ____ personally known or ____ produced _____as identification.

_____
Notary Public, State of Florida
Printed, typed or stamped name, commission and expiration:

PRICE INCREASES

Sparks Concrete & Asphalt

4106 S Nova Rd, Port Orange, FL. 32127
386-760-1003
sparksconcrete@cfl.rr.com

DATE: 6/22/2022

T Lynn Stevens
O City of Port Orange
1000 City Center Circle
Port Orange, FL 32129
lstevens@port-orange.org
386-506-5500

JOB
ITB 19-02 Concrete Installation, Repairs and Replacement Renewal Contract

QTY	DESCRIPTION	ADJUSTED NEW UNIT PRICE	LINE TOTAL
1 LF	Type "D" Concrete Curb	$29.00	$29.00
1 LF	Type "E" Concrete Curb	$31.00	$31.00
1 LF	Type "F" Concrete Curb	$32.75	$32.75
1 LF	Drop Curb (Miami Curb)	$30.00	$30.00
1 LF	Environmental Concrete Curb	$29.00	$29.00
1 CY	Concrete Sidewalks / Driveways	$715.00	$715.00
1 CY	Misc. Concrete Repair/Replacement	$715.00	$715.00

This is a quotation on the goods named, subject to the conditions noted below: The above prices, specifications and conditions are satisfactory and are hereby accepted. The person signing below is authorized to approve andbind this contract.

Accepted by Customer/Client

To accept this quotation, sign here and return: See Page 3 of Amendment No. 3

EXHIBIT "1"

Replacement of Exhibit "1" "Schedule of Unit Prices"

City of Port Orange
Public Works & Utilities Department

TO: Wayne Clark, City Manager

THUR: Lynn Stevens, Public Works & Utilities Director
Julia Wiggins, Public Works & Utilities Business Manager

FROM: Ronny Buttrum, Deputy Director of Public Works

DATE: July 7, 2022

SUBJECT: Sparks Concrete LLC – Amendment No 2 to the Standard Contract for Services CA6825 (ITB 19-02 Concrete Installation, Repairs and Replacement)

REQUEST:
The Department of Public Works & Utilities requests Council approve the Amendment No 2 to the Standard Contract for Services CA6825 for Sparks Concrete LLC.

PURPOSE:
The purpose of this request is to have a contract in place to maintain, install, and replace various sidewalks, driveways, curbing, and other concrete surfaces as needed throughout the City.

CONSIDERATION:
On March 22, 2019, the City entered a Standard Contract for Services with Sparks Concrete LLC pursuant to ITB 19-02, Concrete Installation, Repairs and Replacement. This bid was issued twice due to the low number of responses. On the second advertisement, only two companies submitted bids. One was deemed non-responsive. The initial term of the contract is March 22, 2019, to March 21, 2021, with the option to renew up to two, one-year terms subject to review and approval by the City Manager.

A Renewal Form was executed to renew the contract for the first, one-year term, March 22, 2021, to March 21, 2022, at the same pricing, terms, and conditions. The city also piggybacked two other concrete companies from the Volusia County bid to catch up on many of the sidewalk jobs. Unfortunately, those companies could not perform the work in a timely manner. One company removed various concrete sidewalk panels and set new forms, but never returned to pour the concrete. When called, they never responded until one day the forms were removed. The second company could not perform the volume of work the city needed. Therefore, the purchase orders to both companies were voided.

On March 4, 2022, the City Manager approved Amendment and Renewal No 2 for a price adjustment for the second one-year renewal due to increase costs in overhead expenses.

On June 22, 2022, the City received notification of a second price increase for the current term. Amendment No 2 is necessary to allow a second increase. This is the final one-year renewal period for this contract and the annual spending authority is limited to the budgeted amount as approved by Port Orange City Council for the then-current fiscal year. Various departments utilize this contract as well for their own projects and needs. Sparks Concrete has performed well for the city for many years.

FUNDING:
Fund Name: 301 Capital Projects
Cost Center: Public Works
Program: Roads and Signs
Spend Category: Sidewalk maintenance
Budget: $300,000.00

Other departments - spending will be based on their fund(s) available as per budgeted amount approved by City Council for the then-current fiscal year.

RECOMMENTATION:
The Department of Public Works & Utilities recommends the Council approve the Amendment No 2 to the Standard Contract for Services CA6825 for Sparks Concrete LLC.

ANTICIPATED SCHEDULE:
a.) Placed on contract management – July 8, 2022
b.) Executed Amendment No 2 – as soon as possible

ATTACHMENTS:
a.) Contract CA6825
b.) Price Adjustment Request from Sparks Concrete
c.) Executed Amendment and Renewal No 2

CITY OF PORT ORANGE
STANDARD CONTRACT FOR SERVICES

This Standard Contract for Services ("Contract") is entered into this 22 day of March, ~~2018~~ 2019, by and between the **CITY OF PORT ORANGE**, a Florida municipal corporation, whose principal address is 1000 City Center Circle, Port Orange, Florida 32129 (the "City"), and **SPARKS CONCRETE, LLC** ("Contractor"), a Florida limited liability corporation, whose principal address is 4106 South Nova Road, Port Orange, Florida 32127. The City and Contractor are collectively referred to herein as the "Parties."

1. *Provision of Services*

(a) The Contractor hereby agrees to provide concrete installation, repairs and replacement of existing Portland cement concrete structures, including but not limited to sidewalks, driveway aprons, curbs, gutters and bike paths on an as needed basis, as more specially described in Intent to Bid No. 19-02 ("ITB 19-02"), Scope of Work, Specifications, Addendum No.1, and Contractor's schedule of unit pricing, attached hereto as Exhibit "1." Contractor shall carry out all operations in strict accordance with all Occupational Safety and Health Administration ("OSHA") regulations and manufacturer's safety requirements. Contractor shall provide all Maintenance of Traffic ("MOT") as required per Florida Department of Transportation ("FDOT") specifications to complete the project in a safe manner. A complete copy of ITB 19-02, Scope of Work, Specifications, Addendum No.1, and Contractor's Proposal is available in the Office of the City Clerk.

(b) The time, manner and place for performance of such services shall be:

Term: The initial term of this Contract shall commence on the last date the Contract is signed by the Parties and shall continue for a period of two (2) years (the "Initial Term").

Renewals: Upon mutual agreement of the Parties, this Contract may be renewed for two (2) one-year renewals, subject to the review and approval by the City Manager.

Manner and Place: The work shall be performed in accordance with and in a manner as required by all current federal, state, county, fire, building and land development codes, laws, ordinances and regulations, and with applicable permits and licenses per the City Code of Ordinances.

Time and Essence: Contractor acknowledges that time is of the essence for this Contract.

Authorization for Services: This Contract standing alone does not authorize the purchase of any goods or services or require the City to place any orders for goods or service. Authorization for the purchase of goods or services from Contractor under this Contract shall be upon issuance of a written Purchase Order issued and executed by the City. The City reserves the right to contract with other parties for the goods and services contemplated by this Contract, as determined in the City's sole and absolute discretion.

2. *City Obligations*. In return for the services identified above, the City agrees to compensate the Contractor at the unit costs set forth in Exhibit "1," in an amount not to exceed the fiscal year budget appropriation approved

by the Port Orange City Council for the then-current fiscal year. All payments shall be governed by the Local Government Prompt Payment Act as set forth in Sections 218.70 through 218.79, Florida Statutes, as amended.

3. *Contract Documents* The following forms are attached as Exhibit "2" and must be completed, signed, witnessed and notarized as indicated, and returned to the City prior to the commencement of any services by Contractor under this Contract:

a. Front Page for Bond (F.S. § 255.05)

b. Combination Payment and Performance Bond (F.S. §255.05)

4. *Liens*. Contractor acknowledges that Contractor shall not be entitled to lien the City or other public property.

5. *Contract Administration*. The Public Works and Utilities Director, Lynn Stevens, shall perform contract administration of this Contract. The City may change the contract administration, from time to time and at any time, upon written notice to Contractor. For notice provisions, see the paragraph below entitled "Notice."

6. *Termination for Convenience of the City*

(a) The parties agree that the City may terminate this Contract, or any work or delivery required hereunder, from time to time either in whole or part, whenever the City Manager of Port Orange shall determine that such termination is in the best interest of the City.

(b) Termination, in whole or in part, shall be effected by delivery of a Notice of Termination signed by the City Manager or his designee, mailed or delivered to the Contractor, and specifically setting forth the effective date of termination.

(c) Upon receipt of such Notice, the Contractor shall:

(i) cease any further deliveries or work due under this Contract, on the date, and to the extent, which may be specified in the Notice;

(ii) place no further orders with any subcontractors except as may be necessary to perform that portion of this Contract not subject to the Notice;

(iii) terminate all subcontracts except those made with respect to contract performance not subject to the Notice;

(iv) settle all outstanding liabilities and claims which may arise out of such termination, with the ratification of the Finance Director of Port Orange; and

(v) use best efforts to mitigate any damages which may be sustained by the Contractor as a consequence of termination under this clause.

(d) After complying with the provisions of subparagraph (c), above, the Contractor shall submit a termination claim, in no event later than six (6) months after the effective date of termination, unless one or more extensions of three (3) months each are granted by the Finance Director.

(e) The Finance Director, with the approval of the City Manager, shall pay from the using department's budget, reasonable costs of termination, including a reasonable amount for profit on supplies or services delivered or work completed. In no event shall this amount be greater than the original contract price, reduced by any payments made prior to Notice of Termination, and further reduced by the price of the supplies not delivered or the services not provided. This Contract shall be amended accordingly, and the Contractor shall be paid the agreed amount.

(f) In the event that the parties cannot agree on the whole amount to be paid to the Contractor by reason of termination under this clause, the Finance Director shall pay the Contractor the amounts determined as follows, without duplicating any amounts which may have already been paid under the preceding paragraph of this clause:

(i) With respect to all Contract performance prior to the effective date of Notice of Termination, the total of:

(1) the cost of work performed or supplies delivered;

(2) the cost of settling and paying any reasonable claims as provided in paragraph (c) (iv), above;

(3) a sum as profit on (a) determined by the Finance Director to be fair and reasonable.

(ii) The total sum to be paid under (i) above shall not exceed the contract price, as further reduced by the contract price of work or supplies not terminated.

(g) In the event that the Contractor is not satisfied with any payments which the Finance Director shall determine to be due under this clause, the Contractor may appeal any claim to the City Council in accordance with Paragraph 21 of this contract concerning disputes.

7. *Termination for Convenience for Subcontractors*. In accordance with the termination for the convenience of the City provision of this contract, the Contractor shall include similar provisions in any subcontract, and shall specifically include a requirement that subcontractors make all reasonable efforts to mitigate damages which may be suffered. Failure to include such provisions shall bar the Contractor from any recovery from the City whatsoever of loss or damage sustained by a subcontractor as a consequence of termination for convenience.

8. *Termination for Default*. Either party may terminate this Contract, without further obligation, for the default of the other party or its agents or employees with respect to any agreement or provision contained herein.

9. *Examination of Records*

(a) The Contractor agrees that the City, or any duly authorized representative, shall, until the expiration of five (5) years after final payment hereunder, have access to and the right to examine and copy any pertinent books, documents, papers and records of the Contractor involving transactions related to this Contract.

(b) The Contractor further agrees to include in any subcontract for more than $10,000 entered into as a result of this Contract, a provision to the effect that the subcontractor agrees that the City or any duly authorized representative shall, until the expiration of five (5) years after final payment under the subcontract, have access to and the right to examine and copy any pertinent books, documents, papers and records of such contractor involved in transactions related to such subcontract, or this Contract. The term subcontract as used herein shall exclude purchase orders for public utility services at rates established for uniform applicability to the general public.

(c) The period of access provided in subparagraphs (a) and (b) above for records, books, documents and papers which may relate to any arbitration, litigation, or the settlement of claims arising out of the performance of this contract or any subcontract shall continue until any appeals, arbitration, litigation or claims shall have been finally disposed of.

10. *Public Records Compliance*. Contractor shall comply with public records laws as set forth in Chapter 119, Florida Statutes, and shall specifically:

(a) Keep and maintain public records that ordinarily and necessarily would be required by the City in order to perform the service.

(b) Provide the public with access to public records on the same terms and conditions that the City would provide the records and at a cost that does not exceed the cost provided in Section 119.0701, Florida Statutes, or as otherwise provided by law.

(c) Ensure that public records that are exempt or confidential and exempt from public records disclosure requirements are not disclosed except as authorized by law for the duration of the Contract term.

(d) Upon completion of the Contract, Contractor shall transfer to the City, at no cost, all public records in possession of the Contractor and destroy any duplicate public records that are exempt or confidential and exempt from public records disclosure requirements. All records stored electronically must be provided to the City in a format that is compatible with the information technology systems of the City.

If Contractor does not comply with a public records request, the City shall enforce the contract provisions in accordance with the contract.

CONTRACTOR QUESTIONS RELATING TO CONTRACTOR'S DUTIES TO PROVIDE PUBLIC RECORDS RELATING TO THIS CONTRACT MUST BE FORWARDED TO THE OFFICE OF THE CITY CLERK, CITY HALL, 1000 CITY CENTER CIRCLE, PORT ORANGE, FLORIDA 32129 TELEPHONE: (386) 506-5563 E-MAIL: CITYCLERK@PORT-ORANGE.ORG

11. *Termination for Non-Appropriation of Funds*

(a) If funds are not appropriated for any succeeding fiscal years subsequent to the one in which this contract is entered into, for the purpose of this Contract, then the City may terminate this Contract upon thirty (30) days prior written notice to the Contractor. Should termination be accomplished in accordance with this Section, the City shall be liable only for payments due through the date of termination.

(b) The City agrees that should it terminate in accordance with this Section, it shall not obtain services which are substantially equal to or similar to those for which this contract was entered into. This provision shall survive any termination of the Contract.

12. *Insurance*. Contractor shall maintain insurance during the life of this Contract. Contractor shall provide to the City a certificate of insurance identifying the City of Port Orange as an additional insured. For workers' compensation coverage, the bidder's insurance certificate shall include the insurer's waiver of subrogation in lieu of naming the city as an additional insured for workers' compensation.

Policies other than Workers' Compensation shall be issued by insurers licensed and/or duly authorized under Florida Law to do business in the State of Florida and all insuring companies are required to have a minimum rating of "A" in the "Best Key Rating Guide" published by A.M. Best & Company, Inc. Policies for Workers' Compensation may be issued by companies authorized as a group self-insurer by F.S. 440.572. Contractor shall not commence work under this Contract until the City has received a certificate or certificates of insurance and endorsement evidencing the required insurance. Contractor shall provide the City written notice of cancellation, nonrenewal or any other changes in coverage no later than ten (10) days prior to the effective date of the change.

The City reserves the right to increase insurance coverage as determined for higher risk contracts and shall reimburse the Contractor for the reasonable additional costs of increased coverage.

[Remainder of this page intentionally left blank]

Standard Insurance Requirements			
	Insurance	**Standards**	**Additional Requirements**
☒	Workers' Compensation Additional Coverage:	Limits: Coverage A - Statutory Coverage B - $100,000 All States (Broad Form) Voluntary Compensation	☐If Contract requires work on or about navigable waters, Longshoreman's and Harbor Workers' Coverage required. ☐If vessels involved, Jones Act coverage with limits of $500,000 required.
☒	Comprehensive General Liability (including Completed Operations and Contractual Liability	Limits: Combined Single Limit Bodily Injury and Property damage $500,000 occurrence $1,000,000 Aggregate	☐When work is on or under Railroad rights of way or properties, the Contractor shall take out and maintain during the life of the Contract, Railroad protective liability and property damage insurance in amounts as requested by the Railroad.
☒	Comprehensive Business, Automobile Liability to include all automobiles. Additional Coverage:	Limits: Auto Liability Body Injury: $200,000 each person $300,000 each occurrence. Property Damage Liability $100,000 each occurrence. Non-Owned, Hired Car	Or $500,000 Combined Single Limit for Bodily Injury and Property Damage

Additional Insurance Requirements			
☐	Property Insurance Builders Risk. Additional Coverage:	Limits: Buildings - Completed value of Contract. "All Risk" coverage on latest ISO for or its equivalent. Permission granted to occupy. Owner named as insured AIMA	If Contract requires handling or installation of Owner's equipment, coverage should be furnished on "All Risk" form, including transit and Owner shall be named.
☐	Professional Liability	Limits: Coverage - $1,000,000 minimum.	
☐	Installation Floater (IT)	Limits: Coverage - $ To be determined.	
☐	Contractor Pollution Liability	Limits: Coverage - $ 1,000,000.00.	
☐	Errors and Omissions	Limits: Coverage - $1,000,000.00 minimum.	
☒	Payment and Performance Bond Required	Limits: Coverage - Equal to amount of Contract.	
☐	**Department Head waives Payment and Performance Bond for work under $25,000.00.**		

☐	**Unless otherwise required by law, Department Head waives Insurance for work described as follows: (check at least one)** **☐ under $25,000.00** **☐ including goods F.O.B. the place of destination**

13. *Assignability of Contract*. Neither this contract, nor any part hereof, may be assigned by the Contractor to any other party without the express written approval of the City Council.

14. *Modifications or Changes to this Contract*

(a) Change Orders. The Department Head, with the concurrence of the City's signatory as required by the City's Purchasing Policy, shall without notice to any sureties, have the authority to order changes in this Contract which affect the cost or time of performance. Such changes shall be ordered in writing specifically designated to be a change order. Such orders shall be limited to reasonable changes in the services to be performed or the time of the performance. The City will not be held liable for any changes which have not been properly authorized and approved in accordance with this Contract.

(b) If any change under this clause causes an increase or decrease in Contractor's cost of, or time required for the performance of the work hereunder, Contractor shall receive an equitable adjustment in accordance with subparagraph (d), which shall include all compensation to the Contractor, or the City, of any kind in connection with such change, including all costs and damages related to or incidental to such change.

(c) Contractor need not perform any work described in any change order unless it has received a certification from the City that there are funds budgeted and appropriated sufficient to cover the cost of such changes.

(d) No claim for changes ordered hereunder shall be considered if made after final payment in accordance with the Contract.

15. *Sovereign Immunity*. The City expressly retains all rights, benefits and immunities of sovereign immunity in accordance with Section 768.28, Florida Statutes. Notwithstanding anything set forth in any section of this Contract to the contrary, nothing in this Contract shall be deemed as a waiver of immunity or limits of liability of the City beyond any statutory limited waiver of immunity or limits of liability which may have been adopted by the Florida Legislature or may be adopted by the Florida Legislature and the cap on the amount and liability of the City for damages regardless of the number or nature of claims in tort or equity shall not exceed the dollar amount set by the legislature for tort. Nothing in this Contract shall inure to the benefit of any third party for the purpose of allowing any claim against the City which would otherwise be barred under the Doctrine of Sovereign Immunity or operation of law.

16. *Warranties*. Contractor warrants that (1) the supplies to be provided to the City pursuant to this Contract are fit and sufficient for the purpose intended; (2) the supplies are merchantable, of good quality, and free from defects, whether patent or latent, in material or workmanship, and (3) the supplies sold to the City pursuant to this Contract conform to the standards required by this Contract.

Contractor further warrants that Contractor has title to the supplies provided, and that the supplies are free and clear of all liens encumbrances, and security interests. All warranties made in this Contract, together with service warranties and guarantees, shall run to the City and its successors and assigns.

17. *Additional Warranties*. Contractor further expressly warrants that materials and workmanship are warranted from defect for a one-year period. This is a minimum acceptable warranty.

18. *Additional Bond Security* If any surety bond furnished in connection with this Contract becomes unacceptable to the City, Contractor shall promptly furnish such additional security as may be required from time to time to protect the interests of the City and a person supplying labor and materials in the prosecution of work contemplated by this Contract. Contractor expressly acknowledges that if the work to be performed hereunder is a public work, a Payment and Performance Bond, in accordance with Florida Statutes Section 255.05, in a form acceptable to the City, shall be provided and recorded with the Clerk of Volusia County at Contractors expense.

19. *Inspection*

(a) All supplies (which term throughout this clause includes without limitation raw materials, components, intermediate assemblies, and their products) shall be subject to inspection and test by the City, to the extent practicable at all times and places including the place of manufacturer, and in any event prior to acceptance.

(b) In the event any supplies or lots of supplies are defective in material or workmanship, or otherwise not in conformity with the requirements of this Contract, the City shall have the right either to reject them (with or without instructions as to their disposition) or to require their correction. Supplies or lots of supplies which have been rejected or required to be corrected shall be removed or, if permitted or required by the Finance Director, corrected in place by and at the expense of Contractor promptly after notice, and shall not thereafter be tendered for acceptance unless the former rejection or requirement of correction is disclosed. If Contractor fails promptly to remove such supplies or lots of supplies which are required to be removed or promptly to replace or correct such supplies or lots of supplies, the City may either (i) by contract or otherwise replace or correct such supplies and charge Contractor the cost for such replacement or correction; or (ii) may terminate this Contract for default as provided in the clause of this Contract entitled "Termination for Default." Unless Contractor corrects or replaces such supplies within the delivery schedule, the Finance Director may require the delivery of such supplies at a reduction in price, which is equitable under the circumstances. Acceptance or rejection of the supplies shall be made as promptly as practicable after delivery, except as otherwise provided in this Contract. Failure to inspect and accept or reject supplies shall neither relieve Contractor from responsibility for such supplies as are not in accordance with the Contract requirements nor impose liability on the City therefor.

(c) The inspection and test by the City of any supplies or lots thereof does not relieve Contractor from any responsibility regarding defects or other failures to meet the Contract requirements, which may be discovered prior to acceptance. Except as otherwise provided in this Contract, acceptance shall be conclusive except as regards latent defects, fraud, or such gross mistakes as amount to fraud.

20. *Liability for Loss or Damage*. Contractor shall be liable for any loss of, or damage to, City property caused by the negligence, recklessness, or intended wrongful misconduct of Contractor, his/its agents, servants and employees and shall indemnify and save the City harmless against all actions, proceedings, claims, demands, costs, damages and expenses, including attorney's fees, by reason of any suit or action brought for any actual or alleged injury to or death of any person or damage to property other than City property, resulting from the performance of the Contract by Contractor, his/its agents, servants and employees. Contractor shall submit a full written report to the Finance Director within twenty-four (24) hours following the occurrence of such damage, loss or injury.

21. *Non-discrimination*. During the performance of this Contract, Contractor agrees as follows:

(a) Contractor will not discriminate against any employee or applicant for employment because of race, religion, color, sex, disability, marital status, age or national origin, except where such is a bona-fide occupational qualification reasonably necessary to the normal operation of Contractor. Contractor agrees to post in conspicuous places, available to employees and applicants for employment, notices setting forth the provisions of this non-discrimination clause. Contractor agrees and fully supports and complies with the Americans with Disabilities Act of 1990.

(b) Contractor shall state in all solicitations or advertisements for employees placed by or on behalf of Contractor that Contractor is an equal opportunity employer.

(c) Notices, advertisements and solicitations placed in accordance with federal law, rule or regulation shall be deemed sufficient compliance with this provision. Contractor shall include the provisions of the foregoing subparagraphs (a), (b), and (c) in every subcontract or purchase order of over $10,000 so that the provisions will be binding upon each subcontractor or vendor.

22. *E-Verify*. Contractor shall utilize the U.S. Department of Homeland Security's E-Verify system to verify the employment eligibility of all new employees hired by the Contractor during the term of this Contract and shall expressly require any subcontractor performing services pursuant to this Contract to likewise utilize the U.S. Department of Homeland Security's E-Verify system to verify the employment eligibility of all new employees hired by the subcontractor during the term of this Contract.

23. *Disputes*. The City Manager, who shall reduce his decision to writing and mail or otherwise furnish a copy thereof to Contractor, shall decide disputes with respect to this Contract. The decision by the City Manager shall be final and binding unless, within five (5) business days from the date of delivery of the decision of the City Manager, appeal is made to the City Council in writing and delivered to the City Clerk, Robin L. Fenwick, CMC. The decision of the City Council shall be final and binding unless set aside by a court of competent jurisdiction as fraudulent, capricious, arbitrary, or so grossly erroneous as necessary to imply bad faith, or not to be supported by any evidence.

24. *Force Majeure*. Neither party shall be liable for any delay in performance or failure to perform any obligation hereunder if, and to the extent that, such failure or delay is caused by an event of Force Majeure. Force Majeure shall mean any act, event or condition that is beyond the party's reasonable control, that materially and adversely affects the party's ability to perform its obligations hereunder, and that is not the result of the party's willful neglect, error, omission or failure to exercise reasonable due diligence.

25. *Controlling Law*. **THIS CONTRACT CONTAINS IMPORTANT MATTERS AFFECTING LEGAL RIGHTS AND IS ACCEPTED AND ENTERED INTO IN FLORIDA AND ANY QUESTION REGARDING ITS VALIDITY, CONSTRUCTION, ENFORCEMENT, OR PERFORMANCE SHALL BE GOVERNED BY FLORIDA LAW. ANY LEGAL PROCEEDING ARISING FROM OR IN ANY WAY REGARDING THE CONTRACT SHALL HAVE ITS VENUE LOCATED EXCLUSIVELY IN THE CIRCUIT COURT OF VOLUSIA COUNTY, FLORIDA, AND THE PARTIES HEREBY EXPRESSLY CONSENT AND SUBMIT THEMSELVES TO THE PERSONAL JURISDICTION AND VENUE OF THE COURT.**

26. *Additional Provisions*. This Contract includes all additional provisions as may have been outlined in written quotes and purchase orders and any attachments or exhibits to this Contract whether delivered herewith or subsequently approved as a part hereof, such as drawings or technical specifications prepared in the performance of this work.

27. *Integration*. This Contract and the documents incorporated herein by reference shall constitute the whole agreement between the parties. There are no promises, terms, conditions, or obligations other than those contained herein, and this Contract shall supersede all previous communications, representations, or agreements, written or verbal, between the parties hereto.

28. *Notice*. For purposes of this Contract, notices shall be sent as follows:

City: City of Port Orange
Attention: City Manager
1000 City Center Circle
Port Orange, Florida 32129
(386) 506-5501

Copy to: City of Port Orange
Attention: Lynn Stevens, Public Works and Utilities Director
1000 City Center Circle
Port Orange, Florida 32129
(386) 506-5750

Contractor: Sparks Concrete, LLC
Attention: William C. Sparks, Managing Member
4106 South Nova Road
Port Orange, Florida 32127
(386) 760-1002 – Telephone
sparksconcrete@cfl.rr.com

Any notice or other communication given under the Contract will be in writing and delivered by hand, sent by facsimile (provided acknowledgement of receipt thereof is delivered to the sender), sent by certified, registered mail, or sent by any nationally recognized overnight courier service to the addresses provided herein. The parties may, from time to time and at any time, change their respective addresses and each will have the right to specify as its address any other address by at least 10 days written notice to the other party.

29. *Contract Construction*

This Contract may be executed in one or more counterparts, each of which shall be deemed to be an original but all of which together shall constitute one and the same instrument. The delivery by facsimile or e-mail of an executed copy of this Contract shall be deemed valid as if an original signature was delivered. No contract shall be formed between Contractor and the City until the City signs this Contract.

30. *Authority to Sign*. Each person signing this Contract warrants that he or she is duly authorized to do so and to bind the respective party to the Contract.

[Remainder of this page intentionally left blank]

Witnesses:

Printed Name: Ashley Williams

Printed Name: Karina M Becker

SPARKS CONCRETE, LLC

By: _____

William C. Sparks, Managing Member

If this Contract is signed by an individual not identified as the President of the corporation in the records of the Florida Department of State, Division of Corporations, please provide written authorization for that individual to enter into contracts on behalf of the corporation.

Date: 03/13/2019

STATE OF FLORIDA
COUNTY OF VOLUSIA

The foregoing instrument was acknowledged before me this 13th day of March, 2019, by William C. Sparks, as Managing Member of Sparks Concrete, LLC, a Florida limited liability corporation, and who:

[Notary: Please select one]

☐ is personally known to me; or
☑ has produced Florida Drivers License as identification.

MARY KELLEY BECK
Notary Public, State of Florida
Commission# GG 64682
My comm. expires Jan. 22, 2021

Notary Public, State of Florida
Printed, typed or stamped name, commission and expiration:

Witnesses:

Ruth E. Thayne
Printed Name: RUTH E. THAYNE

Shelby Field
Printed Name: Shelby Field

CITY OF PORT ORANGE

By: _____
Donald O. Burnette, Mayor

Date: 3/22/19

STATE OF FLORIDA
COUNTY OF VOLUSIA

The foregoing instrument was acknowledged before me this 22nd day of March, 2019, by Donald O. Burnette, as Mayor of the City of Port Orange, a Florida municipal corporation, on behalf of the city, and who is personally known to me.

RUTH E. THAYNE
MY COMMISSION # FF924580
EXPIRES October 05, 2019
(407) 398-0153 FloridaNotaryService.com

Ruth E. Thayne
Notary Public, State of Florida
Printed, typed or stamped name, commission and expiration:
RUTH E. THAYNE

Witnesses:

Shelby Field
Printed Name: Shelby Field

Ruth E. Thayne
Printed Name: RUTH E. THAYNE

ATTEST:

By: _____
Robin L. Fenwick, CMC, City Clerk

Date: 3/22/19

STATE OF FLORIDA
COUNTY OF VOLUSIA

The foregoing instrument was acknowledged before me this 22nd day of March, 2019, by Robin L. Fenwick, as City Clerk of the City of Port Orange, a Florida municipal corporation, on behalf of the city, and who is personally known to me.

RUTH E. THAYNE
MY COMMISSION # FF924580
EXPIRES October 05, 2019
(407) 398-0153 FloridaNotaryService.com

Ruth E. Thayne
Notary Public, State of Florida
Printed, typed or stamped name, commission and expiration:
RUTH E. THAYNE

"ATTACHMENT 1" SCHEDULE OF UNIT PRICING

BID FORM

CITY OF PORT ORANGE

ITB # 19-02

Completed Attachment 1 Bid Proposal form MUST be included with Bid Submission

Instruction to save Attachment from DemandStar website:

Perform "File Save As" and save spreadsheet to your computer.

Fill in pricing in highlighted cells, preferably electronically.

Bidders are required to complete all fields shaded in green. All other fields will be automatically calculated.

NAME OF BUSINESS:	Sparks Concrete, LLC
CONTACT PERSON:	Doreen Sparks
EMAIL ADDRESS:	sparksconcrete@cfl.rr.com
AUTHORIZED SIGNATURE:	Doreen Sparks

CONCRETE INSTALLATION, REPAIRS AND REPLACEMENT

ITEM #	DESCRIPTION	ESTIMATED ANNUAL QTY	UNIT	UNIT PRICE	TOTAL PRICE
1	"Type D" Concrete Curb	500	LF	$15.00	$7,500.00
2	"Type E" Concrete Curb	300	LF	$17.00	$5,100.00
3	"Type F" Concrete Curb	300	LF	$18.75	$5,625.00
4	Drop Curb (Miami Gutter)	600	LF	$16.00	$9,600.00
5	Environmental Concrete Curb	200	LF	$15.00	$3,000.00
6	Concrete Sidewalk/Driveway	700	CY	$365.00	$255,500.00
7	Miscellaneous Concrete Repair/Replacement	100	CY	$365.00	$36,500.00
				TOTAL BASE BID	$322,825.00

DESCRIPTION		
Shall warranty the above materials and labor for:	2 Years	

EXHIBIT "1"

SECTION 3 – SCOPE OF WORK

PROJECT DESCRIPTION:

The City of Port Orange is soliciting bids from vendors for installation, repairs and replacement of existing Portland cement concrete structures, including but not limited to sidewalks, driveway aprons, curbs, gutters and bike paths on an as needed basis.

Specifications:

General:

Contractor shall provide all labor, materials, supervision, and equipment for concrete services with specifications provided by the City, other contract documents prepared by the City of Port Orange, and all applicable building codes. The work shall include, but not limited to:

1. Preparing the site by clearing, grading, removal of any tree roots, adding or removing fill.
2. Removing and disposal of all debris created by the removal/installation of concrete.
3. Installing expansion joints in areas where the new concrete adheres to the old concrete.
4. Installing and saw cutting contraction joints,as required.
5. Complying with all ADA standards and requirements.
6. Comply with City Standard Details for all concrete structures.
7. Work will include but not limited to sidewalks, curbs, gutters, driveways, and other concrete repairs or installations as authorized by City staffinwriting.
8. When removing existing sections of concrete, all cuts must be square and located at existing joints. No triangular or odd shaped cuts allowed.
9. Contractor shall restore all areas around the work site to the same or better condition than prior to work beginning.
10. Contractor shall provide documentation supporting the required compression strength design.
11. Concrete shall not be poured during rainy weather. If rain is expected or begins after concrete is poured, contractor is required to cover the concrete until the rain stops.
12. Contractor submitting bid must be proficient in the construction and repair of sidewalks and/or bike paths, curb construction (FDOT Type "D" "E" and "F" Curb, Header Curb, Miami Curb, and Environmental Curb), driveway aprons, etc.
13. Work under this contract will be on an "as needed" basis. A list of repairs items/areas will be given to the contractor and reviewed with the City for scheduling. Contractors shall respond within fifteen days to remove, replace or install concrete as instructed. Contractor must respond to emergency repairs within 24 hours of request.
14. Payment will be upon completion of concrete work and accepted by the City for each portion identified for removal and replacement. Invoices must clearly identify date work was completed, address of work, type of work, and cubic feet/cubic yards of concrete installed, and other pertinent information.
15. Contractor shall provide all Maintenance of Traffic (MOT) as required per Florida Department of Transportation (FDOT) specification to complete the project in a safe manner. The contractor shall be responsible for implementing traffic control procedures in accordance with FDOTstandards.
16. Contractor shall carry out all operations in strict accordance with all OSHA regulations and manufacture's safety requirements.
17. All newly poured sidewalks and driveway sections must allow water to adequately drain from sidewalk sections. No standing water is allowed on sidewalk or driveway sections.

18. No concrete will be stamped or otherwise marked with any company name, logo, etc.

Concrete, Bike Paths, and Curb Cut Ramps:

1. Contractors performing work for construction of concrete sidewalks and concrete driveway apron shall comply with the City of Port Orange Standard Construction Details Ref: M-3, Sidewalk Construction Requirements, M-4 and M-5, Sidewalk and Bike Path Ramp, M-6, Driveway Apron, M-18 and M-19 Sidewalk Construction at Intersections, and R-9 Standard Curb Construction.
2. When replacing existing sidewalk sections, the width of the new sections shall match the existing sections of sidewalk.

SOD:

1. Sod shall be placed in strips of minimum two-foot (2') wide adjacent to the sidewalk and must meet SOD requirements as stated in the Florida Department of Transportation's Specifications #575. If St. Augustine SOD exists prior to construction, contractor shall replace with St. Augustine SOD. Contractor may use Bahia SOD in areas where no grass existed or irrigation is not present, prior to construction.
2. Ground will be leveled prior toso installation.
3. All debris (concrete, rock, etc.) shall be removed prior to installingsod.
4. Sod shall be watered in. Sod shall be laid in such a manner that no ruts, gaps, or other uneven surface remains after work is complete.

Material:

1. Sidewalks, bike paths, ramps, and driveway aprons shall be constructed of Plain Portland Cement Concrete, having a minimum slump of 3 inches, a minimum developed compressive strength of 3000 P.S.I. in 28 days, and a minimum uniformed thickness of 4 inches where intended solely for pedestrian traffic, and 6 inches thick where motor vehicles are likely to cross.

ESTIMATED QUANTITIES

Estimated annual quantities are estimates only based on historical usage and for bid evaluation purposes. The City does not guarantee estimated quantities. Work is based on an as need basis only.

Description	Estimated Annual Quantity	Unit of Measure
Type "D" Concrete Curb	500	Linear Foot
Type "E" Concrete Curb	300	Linear Foot
Type "F" Concrete Curb	300	Linear Foot
Drop Curb (Miami Gutter)	600	Linear Foot
Environmental Concrete Curb	200	Linear Foot
Concrete Sidewalk/Driveway	700	Cubic Yard
Miscellaneous Concrete Repair/Replacement	100	Cubic Yard

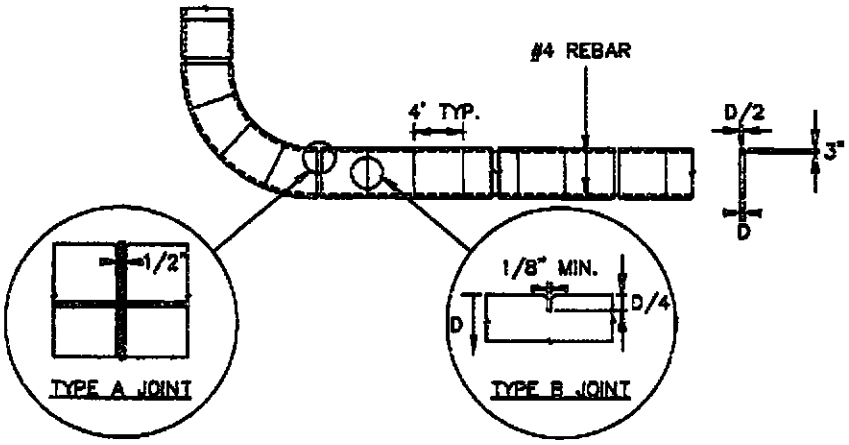

1. SIDEWALKS, BIKEPATHS, RAMPS, AND DRIVEWAY APRONS SHALL BE CONSTRUCTED OF PLAIN PORTLAND CEMENT CONCRETE HAVING A MAXIMUM SLUMP OF 3", A MINIMUM DEVELOPED COMPRESSIVE STRENGTH OF 2,500 PSI IN 28 DAYS, AND A MINIMUM UNIFORM THICKNESS OF 4" WHERE INTENDED SOLELY FOR PEDESTRIAN TRAFFIC, AND 6" WHERE MOTOR VEHICLES ARE LIKELY TO CROSS.
3. 2-#4 METAL REINFORCEMENT BARS WITH MINIMUM 6" OVERLAPS SHALL BE INSTALLED LONGITUDINALLY 3" FROM THE EDGE. THE BARS SHALL BE LOCATED AT MID DEPTH OF THE CONCRETE. THE BARS SHALL BE PLACED ON NON FERROUS SPACERS TO ENSURE REQUIRED SEPARATION FROM SUBGRADE.
4. THE EXISTING SUBGRADE SHALL HAVE ALL ORGANIC, LOOSE, AND DELETERIOUS MATTER REMOVED, AND THE REMAINING CLEAN SOIL AND FILL SHALL BE SMOOTH, SOUND, AND SOLID. THE SUBGRADE SHALL BE COMPACTED TO A MINIMUM 95% DENSITY BASED ON MODIFIED PROCTOR DRY TEST PER AASHTO T-180.
5. ALL CONCRETE WORK IN THE RIGHT-OF-WAY SHALL BE INSPECTED BY THE CITY AFTER THE SUBGRADE IS PREPARED AND THE FORMS ARE SET, BUT BEFORE THE CONCRETE PLACEMENT BEGINS.
6. SIDEWALKS SHALL BE PLACED PARALLEL TO, AND 12" WITHIN THE RIGHT-OF-WAY LINE, EXCEPT THAT THE CITY MAY APPROVE DEVIATIONS TO SAVE SPECIMEN TREES PROVIDED THAT THE SIDEWALK REMAINS WITHIN THE RIGHT-OF-WAY OR AN APPROVED SIDEWALK EASEMENT ABUTTING THE RIGHT-OF-WAY IS RECORDED.
7. THE TOP OF THE SIDEWALK SHALL BE AT AN ELEVATION NO LOWER THAN THE CROWN OF THE ADJACENT ROADWAY, AND NO HIGHER THAN 6" ABOVE THE CROWN UNLESS APPROVED BY THE CITY TO MAKE A MORE NATURAL TRANSITION WITH THE ADJACENT LAND.
8. THE CONCRETE SURFACE SHALL BE BROOM FINISHED TO BE SLIP RESISTANT, AND SHALL MATCH AS CLOSELY AS POSSIBLE THE FINISH OF EXISTING ADJACENT SLABS AND ALL EDGES SHALL BE TOOLED TO ELIMINATE SHARP CORNERS.
9. ISOLATION JOINTS (TYPE A JOINTS) SHALL BE PROVIDED BETWEEN EXISTING CONCRETE OR STRUCTURES AND FRESH CONCRETE, TO SEPARATE PEDESTRIAN SECTIONS FROM SECTIONS WHICH WILL ENCOUNTER VEHICLE TRAFFIC, TO SEPARATE FRESH PLACEMENT FROM CONCRETE WHICH HAS SET FOR MORE THAN 60 MINUTES, AND NO FARTHER APART THAN 100'. JOINT MATERIAL SHALL BE PREFORMED JOINT FILLER MEETING FDOT SPECIFICATIONS.
10. CONTROL JOINTS (TYPE B JOINTS) SHALL BE TOOLED INTO THE FRESH CONCRETE TO A DEPTH EQUAL TO 1/4 THE SLAB THICKNESS, 1/8" WIDTH, AND SPACED APART A DISTANCE EQUAL TO THE WIDTH OF THE SLAB OR 48", WHICHEVER IS GREATEST.
11. THE CONTRACTOR SHALL BE RESPONSIBLE FOR PROTECTING THE FINISHED SIDEWALK FROM ALL DAMAGE AND VANDALISM UNTIL THE CITY ACCEPTS OR APPROVES THE SIDEWALK, AFTER WHICH TIME THE OWNER OF THE ABUTTING LAND SHALL BE RESPONSIBLE FOR THE SIDEWALK IN ACCORDANCE WITH THE CITY CODE. ANY SIDEWALK SECTION DAMAGED OR VANDALIZED PRIOR TO ACCEPTANCE OR APPROVAL SHALL BE CUT OUT BETWEEN JOINTS AND REPLACED. REPAIRS ARE NOT ACCEPTABLE.
12. SIDEWALKS LOCATED WITHIN THE RIGHT-OF-WAY SHALL NOT BE TINTED, STAINED, COLORED, OR COATED.
13. ALL FORMS SHALL BE REMOVED PRIOR TO ACCEPTANCE OR APPROVAL AND THE DISTURBED GROUND SHALL BE BACKFILLED, RE-GRADED, AND SODDED SO THAT THE WEAR SURFACE OF THE CONCRETE IS REASONABLY FLUSH WITH THE ADJACENT SOIL GRADE.

	STANDARD CONSTRUCTION DETAIL SIDEWALK CONSTRUCTION REQUIREMENTS REV. 12/18	FILE NAME: M6.DWG DETAIL REF: M-6

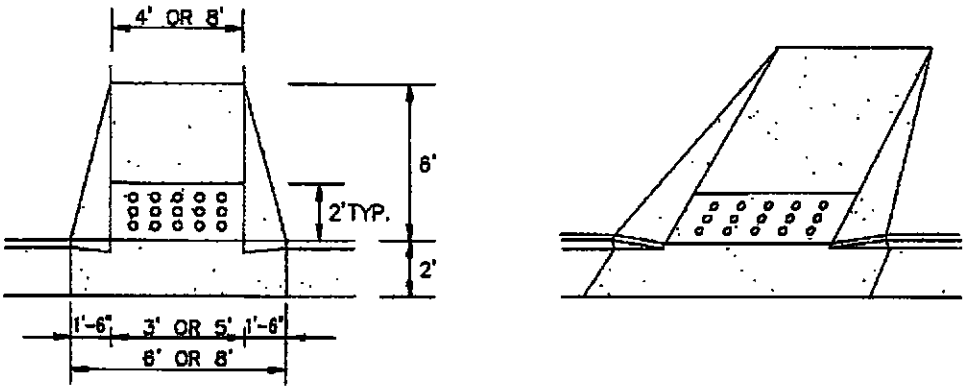

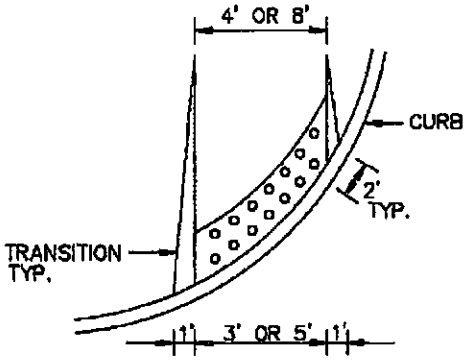

NOTES:

1. RAMP LOCATIONS ARE TO BE COORDINATED WITH AND IN COMFORMANCE WITH CROSSWALK MARKING DETAILS SHOWN IN THE PLANS.
2. CURBED RAMPS SHALL HAVE FLARED SIDES WITH A MAXIMUM SLOPE OF 12:1.
3. RAMPS SHALL HAVE A DETECTABLE WARNING SURFACE AS SHOWN.
4. RAMPS ARE TO BE CONSTRUCTED AT ALL LOCATIONS SHOWN IN THE PLANS EVEN WHEN A SIDEWALK IS NOT CONSTRUCTED CONCURRENTLY.
5. NO CURB TRANSITION IS NEEDED FOR MIAMI CURBS.
6. ALL RAMPS SHALL BE CONSTRUCTED IN ACCORDANCE WITH FDOT INDEX NO. 304 AND HANDICAPPED ACCESSIBILITY REQUIREMENTS IN ACCORDANCE WITH THE AMERICAN DISABLITIES ACT.

	STANDARD CONSTRUCTION DETAIL SIDEWALK AND BIKEPATH RAMP REV. 12/08	FILE NAME: M4.DWG DETAIL REF: M-4

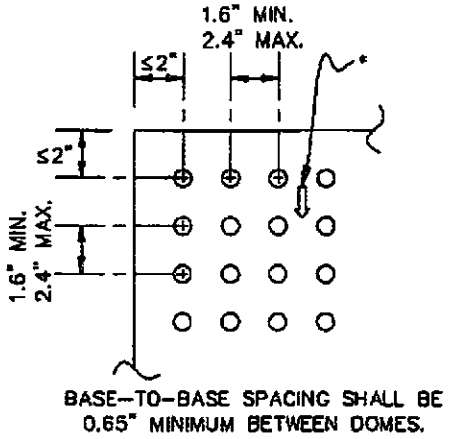

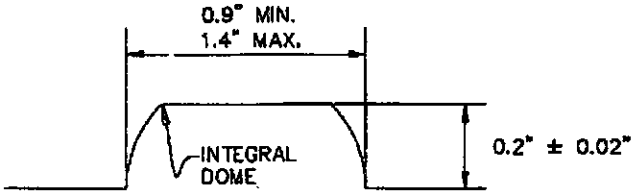

NOTES:

* ON RAMPS TAT ARE PERPENDICULAR WITH THE CURB LINE, THE DOME PATTERN SHALL BE IN-LINE WITH THE DIRECTION OF TRAVEL. ON RAMPS INTERSECTING CURBS ON A RADIUS, THE DOME PATTERN SHALL BE IN-LINE WITH THE DIRECTION OF TRAVEL TO THE EXTENT PRACTICAL.

	STANDARD CONSTRUCTION DETAIL SIDEWALK AND BIKEPATH RAMP REV. 12/08	FILE NAME: M5.DWG DETAIL REF: M-5

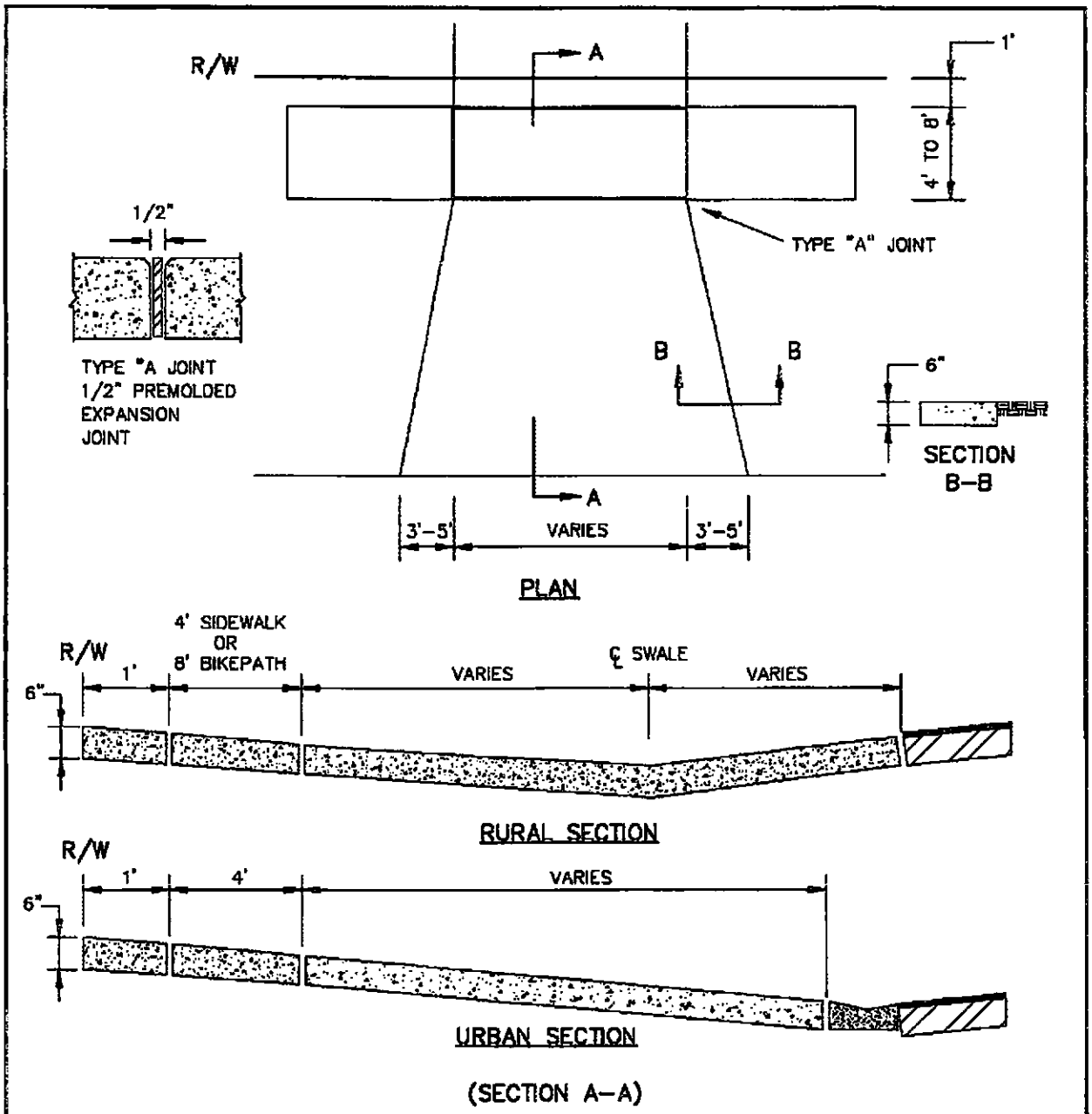

NOTES:

1. DRIVEWAY APRON BASE TO BE COMPACTED AND TESTED TO 98% DENSITY WITH MINIMUM L.B.R. 40 BASED ON AASHTO T–180 MODIFIED PROCTOR TEST.
2. CONCRETE DRIVEWAY APRON TO BE 28 DAY, 3000 P.S.I.

	STANDARD CONSTRUCTION DETAIL DRIVEWAY APRON REV. 12/08	FILE NAME: M6.DWG DETAIL REF: M-6

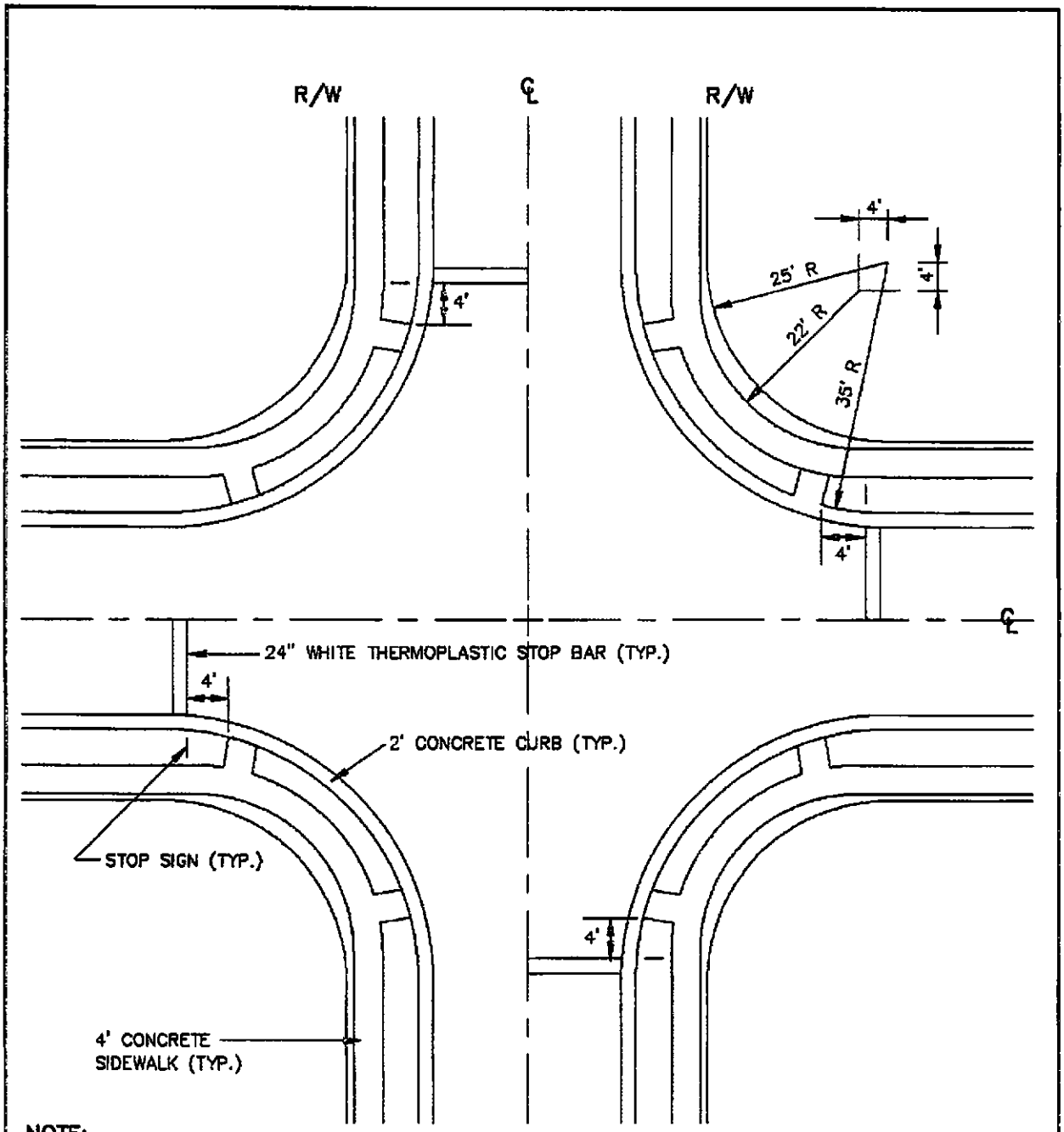

NOTE:

1. REFER TO DETAIL SHEET M-3 FOR SIDEWALK CONSTRUCTION SPECIFICATIONS.
2. REFER TO DETAIL SHEET M-4 & M-5 FOR SIDEWALK & BIKEPATH RAMP SPECIFICATIONS.

	STANDARD CONSTRUCTION DETAIL SIDEWALK CONSTRUCTION AT INTERSECTIONS REV. 12/08	FILE NAME: M18.DWG DETAIL REF: M-18

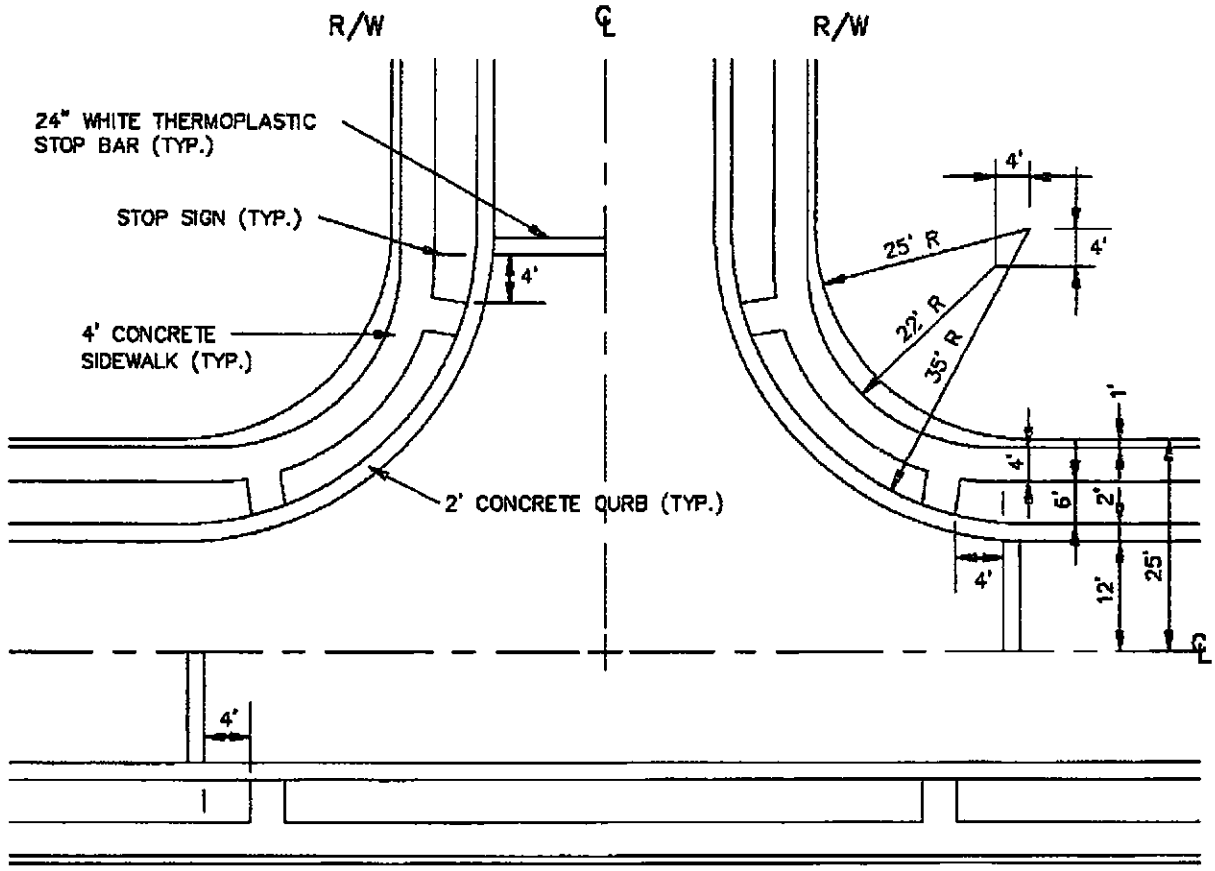

NOTE:

1. REFER TO DETAIL SHEET M-3 FOR SIDEWALK CONSTRUCTION SPECIFICATIONS.
2. REFER TO DETAIL SHEET M-4 & M-5 FOR SIDEWALK & BIKEPATH RAMP SPECIFICATIONS.

	STANDARD CONSTRUCTION DETAIL SIDEWALK CONSTRUCTION AT INTERSECTIONS REV. 12/08	FILE NAME: M19.DWG DETAIL REF: M-19

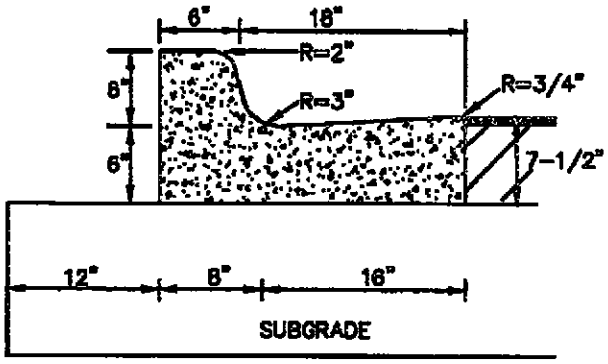

FDOT TYPE "F" CURB

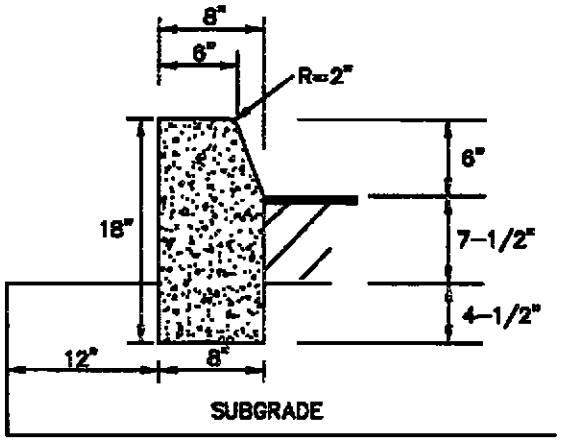

FDOT TYPE "D" CURB

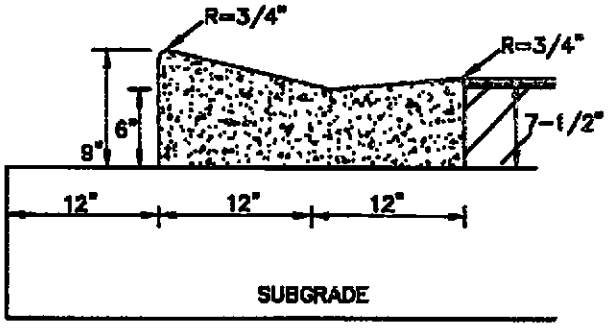

MIAMI CURB

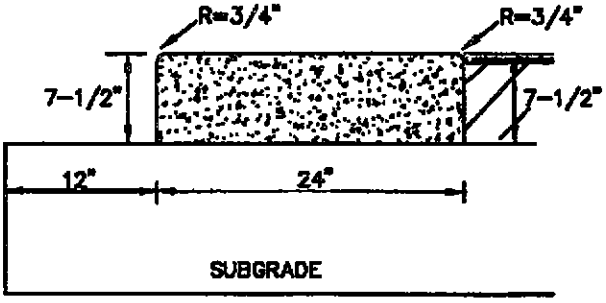

ENVIRONMENTAL CURB

NOTES:

1. ALL CURBS TO BE CONSTRUCTED OF 28 DAY, 3000 PSI CONCRETE.
2. 1/2" PRE-MOLDED EXPANSION JOINT REQUIRED EVERY 500'. CONSTRUCTION JOINT REQUIRED EVERY 10' MAXIMUM AND 4' MINIMUM.
3. 1/2" PRE-MOLDED EXPANSION JOINT REQUIRED AT EACH SIDE OF ALL STORM INLET STRUCTURES AND AT ALL RADIUS POINTS.
4. 12" SUBGRADE TO BE STABILIZED TO A MINIMUM LBR 40 AND COMPACTED TO 98% DENSITY BASED ON AASHTO T-180 MODIFIED PROCTOR TEST.
5. EXPANSION JOINT MATERIAL MUST COVER THE ENTIRE CROSS SECTION OF CURB.
6. HEADER-TYPE CURBS INSTALLED DIRECTLY ON TOP OF PAVEMENT (EXTRUDED CURBS) ARE NOT PERMITTED.
7. ALL ASPHALT AND/OR PAVER DRIVEWAY APRONS LOCATED IN PUBLIC R/W SHALL INCLUDE CURBING.

	STANDARD CONSTRUCTION DETAIL STANDARD CURB CONSTRUCTION REV. 12/18	FILE NAME: R9.DWG DETAIL REF: R-9

EXHIBIT "2"

Combination Payment and Performance Bond

Consisting of 3 Pages

FRONT PAGE FOR BOND REQUIRED BY SECTION 255.05, F.S.

PAYMENT AND PERFORMANCE BOND

(Public Works)

Notice and Time Limitations Must Be In Accordance
With Section 255.05(2), (8) and (10), Florida Statutes

BOND NO. _____

PRINCIPAL:

Developer or Contractor:	Sparks Concrete, LLC.
Principal Business Address:	4106 South Nova Road Port Orange, Florida 32127
Contact Person:	William C. Sparks, Managing Member
Phone Number:	(386) 760-1002

SURETY: _____

Address: _____

_____

Contact Person: _____

Phone Number: _____

OWNER:	City of Port Orange, Florida, a chartered municipal corporation 1000 City Center Circle Port Orange, Florida 32129-4144
Contact Person:	City Manager
Phone Number:	(386) 506-5501

Amount: $375,000.00 **City Project Number: ITB19-02 Concrete Installation, Repairs and Replacement**
City Case/FY19/CC030519

Description of Work: Concrete Installation, Repairs and Replacement

Project Location: Various locations within the City of Port, Port Orange, Volusia County, Florida

Legal Description: Various locations within the City of Port, Port Orange, Port Orange, Volusia County, Florida

Front Page

All other pages are subsequent to this page regardless of any numbers that may be printed thereon.

[CA6825]
[MTR/sal 2015-02-10]

Sparks Concrete, LLC

ITB19-02 Concrete Installation, Repairs and Replacement
City Case/FY19/CC030519

Bond No._____

COMBINATION PAYMENT AND PERFORMANCE BOND
FOR
PUBLIC CONSTRUCTION

per Section 255.05, Florida Statutes
Guaranty for Construction of Public Improvements

BY THIS BOND, We, **Sparks Concrete, LLC**, as Principal, and _____, a corporation, as Surety, are bound to **CITY OF PORT ORANGE, FLORIDA**, a Florida municipal corporation, herein called "Owner" or sometimes referred to as "City," in the sum of **THREE HUNDRED SEVENTY-FIVE THOUSAND AND 00/100 DOLLARS ($375,000.00)**, for payment of which we bind ourselves, our heirs, personal representatives, successors, and assigns, jointly and severally.

THE CONDITION OF THIS BOND is that if Principal:

1. Performs the terms of that certain Standard Contract for Services, having an effective date of _____, entered into by and between the Principal and the City, for Concrete Installation, Repairs and Replacement, hereinafter referred to as the "Contract," being made a part of this bond by reference, at the times and in the manner prescribed in the Contract; and

2. Promptly makes payments to all claimants, as defined in Section 255.05(1), Florida Statutes, supplying Principal with labor, materials, or supplies, used directly or indirectly by Principal in the prosecution of the work provided for in the Contract (the "Work"); and

3. Pays Owner all losses, damages, delay damages (including contractually authorized liquidated damages), expenses, costs, and attorney's fees, including appellate proceedings, that Owner sustains because of a breach or material breach by Principal under the Contract documents; and

4. Performs the guarantee of all work and materials furnished under the Contract for the time specified in the Contract, then this bond is void; otherwise it remains in full force.

Notice of Nonpayment and Time Limitations

Any action instituted by a claimant under this bond for payment must be in accordance with the notice and time limitation provisions in Sections 255.02(2), (8) and (10), Florida Statutes.

Any changes in or under the contract documents and compliance or noncompliance with any formalities connected with the contract or the changes does not affect Surety's obligation under this bond.

IN WITNESS WHEREOF, this performance and payment bond is executed and shall be deemed an original, this _____, day of _____, 2019.

Attest:

SPARKS CONCRETE, LLC
(Principal)

_____
(As to Corporate Principal) Secretary

By: William C. Sparks, Managing Member
_____

_____
(Witness to Principal)

(Corporate Seal)

_____
(Surety)

_____
(Witness to Surety)

By:_____
Name:_____
(Attorney-in-Fact)

(Corporate Seal)

NOTE: ***Date of BOND must not be prior to date of Contract.*** *If Developer/Principal is Partnership, all partners should execute BOND. All BONDS signed by an agent must be accompanied by a certified copy of the authority to act.*

IMPORTANT: Surety companies executing BONDS must appear on the Treasury Department's most current list (Circular 570 as amended) and be authorized to transact business in the State of Florida.

Sparks
Concrete / Asphalt
An Equal Opportunity Employer
4106 South Nova Road
Port Orange, Fl. 32127
386-760-1002
sparksconcrete@cfl.rr.com

Date: 6-22-22

To: Lynn Stevens, Director of Public Works
City of Port Orange
1000 City Center Circle
Port Orange, FL. 32129

Regarding: Price Changes on the Renewal for Annual Contract for Concrete Installation, Repairs and Replacement

Dear Lynn,

This letter is to serve as a second notice this year of an increase in pricing for the items of service under this annual contract. Unfortunately, due to continuing increases in costs this year that are daily impacting Sparks Concrete, I am unable to maintain the set pricing that was agreed upon in our first increase set on January 24, 2022, under this contract. This has overall affected my entire operation from materials to labor to fuel costs. We apologize for the increases, but I must adjust our current set prices for services to compensate for these cost increases. Please see the attached schedule of contract items with the new prices moving forward upon yours and the city's approvals.

Please do not hesitate to directly reach out to me if you need to further discuss this with me.

Yours Truly,

Billy Sparks

William (Billy) Sparks
Sparks Concrete, LLC
386-527-4857

PRICE INCREASES

Sparks Concrete & Asphalt

4106 S Nova Rd, Port Orange, FL. 32127
386-760-1003
sparksconcrete@cfl.rr.com

DATE: 6/22/2022

T Lynn Stevens
O City of Port Orange
1000 City Center Circle
Port Orange, FL 32129
lstevens@port-orange.org
386-506-5500

	JOB		
	ITB 19-02 Concrete Installation, Repairs and Replacement Renewal Contract		

QTY	DESCRIPTION	ADJUSTED NEW UNIT PRICE	LINE TOTAL
1 LF	Type "D" Concrete Curb	$29.00	$29.00
1 LF	Type "E" Concrete Curb	$31.00	$31.00
1 LF	Type "F" Concrete Curb	$32.75	$32.75
1 LF	Drop Curb (Miami Curb)	$30.00	$30.00
1 LF	Environmental Concrete Curb	$29.00	$29.00
1 CY	Concrete Sidewalks / Driveways	$715.00	$715.00
1 CY	Misc. Concrete Repair/Replacement	$715.00	$715.00

This is a quotation on the goods named, subject to the conditions noted below: The above prices, specifications and conditions are satisfactory and are hereby accepted. The person signing below is authorized to approve andbind this contract.

Accepted by Customer/Client

To accept this quotation, sign here and return: _____

AMENDMENT AND RENEWAL NO. 2

THIS AMENDMENT AND RENEWAL NO. 2 ("2022 Amendment and Renewal") is made and entered into the day and year set forth hereinafter by and between the **CITY OF PORT ORANGE, FLORIDA**, a Florida municipal corporation located at 1000 City Center Circle, Port Orange, Volusia County, Florida 32129-4144 (the "City"), and **SPARKS CONCRETE, LLC** ("Contractor") a Florida limited liability company with its principal place of business at 4106 South Nova Road, Port Orange, Florida 32127. The City and the Contractor are hereinafter collectively referred to as the "Parties."

WHEREAS, on the 22nd day March of 2019, the Parties entered into a contract pursuant to Invitation to Bid 19-02 ("ITB 19-02") for concrete installation, repairs and replacement of existing Portland cement concrete structures, including but not limited to sidewalks, driveway aprons, curbs, gutters and bike paths on an as needed basis ("Contract"), having an initial term commencing on March 22, 2019 and continuing until March 21, 2021, with two (2) one-year renewals upon written mutual agreement of the Parties, subject to the review and approval of the City Manager; and

WHEREAS, on the 3rd day of February 2021, the Parties exercised the first renewal option and renewed the Contract via the City of Port Orange Renewal Form, with a renewal term commencing on March 22, 2021 and continuing until to March 21, 2022; and

WHEREAS, the Parties desire to utilize the second and final renewal option to renew the Contract for a term, notwithstanding the date of execution, to commence on March 22, 2022 and continue until March 21, 2023; and

WHEREAS, the Parties desire to amend Exhibit "1" "Schedule of Unit Pricing" of the Contract to allow a price adjustment due to increased costs in overall expenses, limited to budget appropriation; and

WHEREAS, the Port Orange City Manager has determined that the execution of this 2022 Amendment and Renewal is beneficial to the citizens of the City of Port Orange.

NOW, THEREFORE, the Parties, for good and valuable consideration, the receipt and sufficiency of which are hereby acknowledged, agree as follows:

1. The foregoing recitals are true and correct and incorporated herein.

2. *Term*. The term of the Contract is hereby amended and renewed, notwithstanding the date of execution shall commence on March 22, 2022 and continue until March 21, 2023.

3. *Exhibit "1"*. Exhibit "1" "Schedule of Unit Pricing" is hereby deleted in its entirety and shall be replaced with Sparks Concrete, LLC Price Increase dated January 24, 2022, attached hereto and made a part hereof as Exhibit "1," due to increased costs in overall expenses.

4. *Counterparts*. This 2022 Amendment and Renewal may be executed in one or more counterparts, each of which shall be deemed to be an original but all of which together shall constitute one and the same instrument. The delivery by facsimile or e-mail of an executed copy of this 2022 Amendment and Renewal shall be deemed valid as if an original signature was delivered. No contract shall be formed between Contractor and the City until the City signs this 2022 Amendment and Renewal.

5. All other terms and conditions of the Contract shall remain in full force and effect.

IN WITNESS WHEREOF, the Parties hereto have signed, sealed, and delivered this 2022 Amendment and Renewal on the day and year stated hereinafter.

Witnesses:

Jessica Vert

Printed Name: Jessica Vert

Tony

Printed Name: Tony Gilotti

SPARKS CONCRETE, LLC

By: William C. Sparks

William C. Sparks, Managing Member

If this Agreement is signed by an individual not identified as the Manager of the company in the records of the Florida Department of State, Division of Corporations, or other legally authorized person, then please provide written authorization for that individual to enter into contracts on behalf of the company.

Date: March 2, 2022

STATE OF FLORIDA
COUNTY OF VOLUSIA

The foregoing instrument was acknowledged before me by means of ✓ physical presence or _____ online notarization, this 2ND day of March, 2022, by William C. Sparks, as Managing Member of Spars Concrete, LLC, a Florida limited liability company. He is _____ personally known or ✓ produced FL Driver license as identification.

ROBERT DELGADO
MY COMMISSION # GG 302728
EXPIRES: March 13, 2023

Robert Delgado

Notary Public, State of Florida

Printed, typed or stamped name, commission and expiration:

Witnesses:

Printed Name: Jamie Miller

Printed Name: Geri Petraglia

CITY OF PORT ORANGE

By: _____
Wayne Clark, City Manager

Date: 3/4/2022

STATE OF FLORIDA
COUNTY OF VOLUSIA

The foregoing instrument was acknowledged before me by means of ✓ physical presence or _____ online notarization, this 4 day of March, 2022, by Wayne Clark, as City Manager of the City of Port Orange, a Florida municipal corporation, on behalf of the city. He is ✓ personally known or ____ produced _____ as identification.

GERI PETRAGLIA
Commission # HH 213884
Expires January 5, 2026

_____
Notary Public, State of Florida
Printed, typed or stamped name, commission and expiration:

Witnesses:

Printed Name: Jamie Miller

Printed Name: Geri Petraglia

ATTEST:

By: _____
Robin L. Fenwick, MMC, City Clerk

Date: 3/4/2022

STATE OF FLORIDA
COUNTY OF VOLUSIA

The foregoing instrument was acknowledged before me, by means of ✓ physical presence or ____ online notarization, this 4 day of March, 2022, by Robin L. Fenwick, as City Clerk of the City of Port Orange, a Florida municipal corporation, on behalf of the city. She is ✓ personally known or ____ produced _____ as identification.

GERI PETRAGLIA
Commission # HH 213884
Expires January 5, 2026

_____
Notary Public, State of Florida
Printed, typed or stamped name, commission and expiration:

PRICE INCREASES

Sparks Concrete & Asphalt

4106 S Nova Rd, Port Orange, FL. 32127
386-760-1003
sparksconcrete@cfl.rr.com

DATE: 1/24/2022

T Lynn Stevens
O City of Port Orange
1000 City Center Circle
Port Orange, FL 32129
lstevens@port-orange.org
386-506-5500

JOB
ITB 19-02 Concrete Installation, Repairs and Replacement Renewal Contract

QTY	DESCRIPTION	ADJUSTED NEW UNIT PRICE	LINE TOTAL
1 LF	Type "D" Concrete Curb	$24.00	$24.00
1 LF	Type "E" Concrete Curb	$26.00	$26.00
1 LF	Type "F" Concrete Curb	$27.75	$27.75
1 LF	Drop Curb (Miami Curb)	$25.00	$25.00
1 LF	Environmental Concrete Curb	$24.00	$24.00
1 CY	Concrete Sidewalks / Driveways	$515.00	$515.00
1 CY	Misc. Concrete Repair/Replacement	$515.00	$515.00

This is a quotation on the goods named, subject to the conditions noted below: The above prices, specifications and conditions are satisfactory and are hereby accepted. The person signing below is authorized to approve andbind this contract.

Accepted by Customer/Client

To accept this quotation, sign here and return: **See Page 3 of Amendment and Renewal No. 2**

EXHIBIT "1"

Replacement of Exhibit "1" "Schedule of Unit Prices"

PRICE INCREASES

Sparks Concrete & Asphalt

4106 S Nova Rd, Port Orange, FL. 32127
386-760-1003
sparksconcrete@cfl.rr.com

DATE: 1/24/2022

T Lynn Stevens
O City of Port Orange
1000 City Center Circle
Port Orange, FL 32129
lstevens@port-orange.org
386-506-5500

JOB
ITB 19-02 Concrete Installation, Repairs and Replacement Renewal Contract

QTY	DESCRIPTION	ADJUSTED NEW UNIT PRICE	LINE TOTAL
1 LF	Type "D" Concrete Curb	$24.00	$24.00
1 LF	Type "E" Concrete Curb	$26.00	$26.00
1 LF	Type "F" Concrete Curb	$27.75	$27.75
1 LF	Drop Curb (Miami Curb)	$25.00	$25.00
1 LF	Environmental Concrete Curb	$24.00	$24.00
1 CY	Concrete Sidewalks / Driveways	$515.00	$515.00
1 CY	Misc. Concrete Repair/Replacement	$515.00	$515.00

This is a quotation on the goods named, subject to the conditions noted below: The above prices, specifications and conditions are satisfactory and are hereby accepted. The person signing below is authorized to approve andbind this contract.

Accepted by Customer/Client

To accept this quotation, sign here and return: **See Page 3 of Amendment and Renewal No. 2**

EXHIBIT "1"

Replacement of Exhibit "1" "Schedule of Unit Prices"

Sparks
Concrete / Asphalt
An Equal Opportunity Employer
4106 South Nova Road
Port Orange, Fl. 32127
386-760-1002
sparksconcrete@cfl.rr.com

Date: 6-22-22

To: Lynn Stevens, Director of Public Works
City of Port Orange
1000 City Center Circle
Port Orange, FL. 32129

Regarding: Price Changes on the Renewal for Annual Contract for Concrete Installation, Repairs and Replacement

Dear Lynn,

This letter is to serve as a second notice this year of an increase in pricing for the items of service under this annual contract. Unfortunately, due to continuing increases in costs this year that are daily impacting Sparks Concrete, I am unable to maintain the set pricing that was agreed upon in our first increase set on January 24, 2022, under this contract. This has overall affected my entire operation from materials to labor to fuel costs. We apologize for the increases, but I must adjust our current set prices for services to compensate for these cost increases. Please see the attached schedule of contract items with the new prices moving forward upon yours and the city's approvals.

Please do not hesitate to directly reach out to me if you need to further discuss this with me.

Yours Truly,

Billy Sparks

William (Billy) Sparks
Sparks Concrete, LLC
386-527-4857

PRICE INCREASES

Sparks Concrete & Asphalt

4106 S Nova Rd, Port Orange, FL. 32127
386-760-1003
sparksconcrete@cfl.rr.com

DATE: 6/22/2022

T Lynn Stevens
O City of Port Orange
1000 City Center Circle
Port Orange, FL 32129
lstevens@port-orange.org
386-506-5500

	JOB		
	ITB 19-02 Concrete Installation, Repairs and Replacement Renewal Contract		

QTY	DESCRIPTION	ADJUSTED NEW UNIT PRICE	LINE TOTAL
1 LF	Type "D" Concrete Curb	$29.00	$29.00
1 LF	Type "E" Concrete Curb	$31.00	$31.00
1 LF	Type "F" Concrete Curb	$32.75	$32.75
1 LF	Drop Curb (Miami Curb)	$30.00	$30.00
1 LF	Environmental Concrete Curb	$29.00	$29.00
1 CY	Concrete Sidewalks / Driveways	$715.00	$715.00
1 CY	Misc. Concrete Repair/Replacement	$715.00	$715.00

This is a quotation on the goods named, subject to the conditions noted below: The above prices, specifications and conditions are satisfactory and are hereby accepted. The person signing below is authorized to approve andbind this contract.

Accepted by Customer/Client

To accept this quotation, sign here and return: _____

CITY COUNCIL AGENDA ITEM

COUNCIL MEETING DATE 9/20/2022

SUBJECT: (C8c) Approval of Change Order No. 1 to Standard Contract for Services (CA7244) with Kimley Horn & Associates for RFSQ 20-02, 20-Inch Force Main River Crossing Design

DEPARTMENT: Public Utilities

GOAL: 2 - Infrastructure

RECOMMENDED MOTION: Move to approve Change Order No. 1 to Standard Contract for Services (CA7244) with Kimley-Horn & Associates, Inc. for the 20-Inch Force Main River Crossing Design as described under RFSQ #20-02 to extend the completion date for an additional two (2) years; October 7, 2022 to October 7, 2024, and increase the amount by $145,050, revising the contract amount to $733,785.

SUMMARY: The City of Port Orange provides sanitary sewer service to Daytona Beach Shores & Ponce Inlet. The towns are separated from the City of Port Orange by the Intercostal Water Way & the Halifax River. The average daily flow from the barrier islands is approximately 1.0 million gallons per day (MGD). Wastewater from the barrier islands is transmitted to the City's Water Reclamation Facility through a 20" Ductile Iron Pipe (DIP) subaqueous force main which was constructed in the late 1980's. The City has determined the need to replace the existing DIP force main with a new High-Density Polyethylene (HDPE) force main to ensure uninterrupted sewer service for Daytona Beach Shores and Ponce Inlet.

In 2000, the City advertised a Request for a Statement of Qualifications (RFSQ) for the design of the new river crossing. In January 2021, City Council approved the contract award to Kimley Horn for the design of the pipeline. The contract was finalized in February 2021 and the notice to proceed was issued in March 2021. The design of the river crossing is near completion. However, with the planned development of the Riverwalk property, staff has instructed Kimley Horn to move the western connection of the pipeline to traverse the perimeter of the Riverwalk property instead of the current path, which is Halifax Drive to Herbert Street. By moving the western end of the pipeline along Dunlawton to US-1, then north to Herbert Street, it will avoid future conflict with redevelopment of the area.

This change order also includes additional time to maneuver through the lengthy permitting processes for construction through waters of the State. The construction project requires permits from Army Corp of Engineers, Florida Department of Environmental Protection, and Florida Department of Transportation. The additional time requested is for the permitting and bidding processes.

This project is partially funded with ARPA money and staff expects to obtain some funding from grant opportunities.

PRESENTER: Lynn Stevens

ATTACHMENTS:

1.	Kimley-Horn Change Order No 1 - 20in FM River Crossing	Kimley-Horn Change Order No 1 - 20in FM River Crossing.pdf
2.	Justification Memo Kimley Horn Force Main River Crossing Change Order 1	Justification Memo Kimley Horn Force Main River Crossing Change Order 1.docx
3.	Kimley Horn Standard Contrct for 20 in FM River Crossing	Kimley Horn Standard Contrct for 20 in FM River Crossing.pdf
4.	Executed Notice to Proceed	Executed Notice to Proceed.pdf
5.	20in FM proposal_AmendNo1_Updated	20in FM proposal_AmendNo1_Updated.pdf

Kelly Klausky	Created/Initiated - 8/29/2022
Richard Colby	Approved - 9/1/2022
Junos Reed	Approved - 9/1/2022
Steve Parnell	Approved - 9/1/2022
Lynn Stevens	Approved - 9/1/2022
Julia Wiggins	Approved - 9/8/2022
John McKinney	Approved - 9/8/2022
Matthew Jones	Approved - 9/8/2022
Wayne Clark	Approved - 9/9/2022
Robin Fenwick	Final Approval - 9/9/2022

CHANGE ORDER NO. 1
To the Standard Contract for Services dated February 9, 2021
KIMLEY-HORN & ASSOCIATES, INC. Contractor

Project: RFSQ 20-02, 20-inch Force Main River Crossing

The following changes are hereby made to the Contract Documents:

CHANGE IN CONTRACT PRICE:	**CHANGE IN CONTRACT TIMES**:
Original Contract Price: $588,735.00	Original Contract Times: Substantial Completion: 18 Months September 7, 2022 Final Completion: 30 days October 7, 2022 NTP Issued: March 8, 2021
Net changes from previous Change Order: N/A	Changes in contract time from previous Change Orders: N/A
Contract Price prior to this Change Order: $588,735.00	Contract Completion Date prior to this Change Order: Substantial Completion: 18 Months September 7, 2022 Final Completion: 30 days October 7, 2022
Net Increase (decrease) of this Change Order: No. 1 $145,050.00	Changes in contract time requested this Change Order: No. 1: 2 years
Contract Price with all approved Change Orders: $733,785.00	Contract Times with all approved Change Orders: Substantial Completion: September 7, 2024 Final Completion: October 7, 2024

CHANGES ORDERED:

I. GENERAL: This Change Order is necessary to cover changes in the work to be performed under the Standard Contract for Services entered into by and between the parties on February 9, 2021.

II. REQUIRED CHANGES: Change Order is necessary to provide additional funding and to extend the final completion date. No goods shall be delivered, nor services commenced hereunder until this Change Order has been fully executed by all parties.

III. JUSTIFICATION: Change Order 1 is needed for the re-design of the western portion of the 20-Inch Force Main to avoid impacts to the proposed development along the Riverwalk area. Additionally, the Change Order will cover additional services related to utilizing a Construction Manager at Risk (CMAR) to construct the project and provide an additional two (2) years for completion.

IV. PAYMENT: Payment for this Change Order shall be made in accordance with the terms of the Standard Contract for Services CA7244 subject to a limit up to but not to exceed $145,050; revised contract amount of $733,785. All payments shall be governed by the Local Government Prompt Payment Act as set forth in Florida Statutes Section 218.70 through 218.79, as amended.

V. This Change Order may be executed in one or more counterparts, each of which shall be deemed to be an original but all of which together shall constitute one and the same instrument. The delivery by facsimile or e-mail of an executed copy of this Change Order shall be deemed valid as if an original signature was delivered. No contract shall be formed between the Contractor and the City until the City signs this Change Order.

Acknowledgments:

The aforementioned change, and work affected thereby, is subject to all provisions of the original contract not specifically changed by this Change Order;

It is expressly understood and agreed that the approval of the Change Order shall have no effect on the original contract other than matters expressly provided herein;

The prices quoted are fair and reasonable and in proper ratio to the cost of the original work contracted for under competitive bidding; and,

The change in price and/or delivery date described is considered to be fair and reasonable and has been mutually agreed upon in full agreement and final settlement of all claims arising out of this modification including all claims for delays and disruptions resulting from, caused by, or incident to such modifications and change orders.

RECOMMENDED BY:
JUNOS REED
Department Project Manager

By:_____
Junos Reed, Eng & Const Manager

Date Signed:_____

ACCEPTED BY:
KIMLEY-HORN & ASSOCIATES, INC.
Contractor

By:_____
Johnathan D. Thigpen, Vice President

Date Signed:_____

RECOMMENDED BY:
N/A
City's Representative

By:_____
Printed Name:_____
Title:_____

Date Signed:_____

RECOMMENDED BY:
N/A
Engineer of Record

By:_____
Printed Name:_____
Title:_____

Date Signed:_____

APPROVED BY:
CITY OF PORT ORANGE
Department Head

By:_____
Lynn Stevens, Public Works & Utilities Director

Date Signed:_____

City Manager

By:_____
Wayne Clark, City Manager

Date Signed:_____

<u>If Council approval is required:</u>

By:_____
Donald O. Burnette, Mayor

Date Signed:_____

Affirmed:

_____
Robin L. Fenwick, MMC, City Clerk

Date Signed:_____

Kimley»Horn

CHANGE ORDER NO. 1 TO

STANDARD SERVICES CONTRACT CA7244 AS IT RELATES TO RFSQ 20-02 - 20-INCH FORCE MAIN REPLACEMENT

Describing a specific agreement between Kimley-Horn and Associates, Inc. (Kimley-Horn), and The City of Port Orange (the Client or the City) in accordance with the terms of Standard Services Contract CA7244 as it relates to RFSQ 20-02 20 Inch Force Main Replacement, which is incorporated herein by reference.

Project Understanding

The City currently owns and operates a 20-inch force main which crosses the Halifax River parallel to Dunlawton Avenue from approximately US-1 to S. Peninsula Drive. The City desires to add scope to the existing contract to include the re-design of the western portion of the Force Main due to the proposed development along the Riverwalk area. These changes include adjusting the location crossing the Halifax River on the western side of the route to directly parallel Dunlawton Avenue, as well as extending the force main north along US-1 approximately 750 LF from Dunlawton Avenue to Herbert Street. There is an existing cast iron water main within the same corridor on US 1. The City desires to replace this existing cast iron water main between Dunlawton Avenue and Herbert Street while working in the area. Additionally, the City has requested the design of a fiber optic cable crossing of the Halifax River to be designed in parallel with the force main crossing.

Specific Scope of Basic Services:

<u>Task 2a: 60% Redesign Services</u>

Due to the realignment of a portion of the route and the additional services requested, a revised set of 60% plans will be prepared.

1. Perform additional survey and locate services along US 1 between Dunlawton Avenue and Herbert Street.

2. 60% Redesign of the western force main route, between the Port Orange Causeway Park and Halifax Drive. The proposed force main will be designed to run parallel to Dunlawton Avenue and will continue to US-1. This revised route includes approximately 1500-LF of 24-inch force main.
3. 60% Design of approximately 750-LF of 20-inch DIP force main along US-1 from Dunlawton Avenue, connecting to the North at Herbert Street.
4. 60% Design of approximately 750-LF of 6-inch PVC water main along US-1 from Dunlawton Avenue, connecting to the North at Herbert Street.
5. 60% Design of a fiber optic conduit sized to the City's specifications.
6. 60% review meeting with staff

<u>Task 3a: 90% Redesign and Final Design</u>

Based on comments provided at the 60% design level, Kimley-Horn adds the following services to this task:

1. Redesign of the western force main route, between the Port Orange Causeway Park and Halifax Drive. The proposed force main will be designed to run parallel to Dunlawton

Avenue and will continue to US-1. This revised route includes approximately 1500-LF of 24-inch force main.

2. Design of approximately 750-LF of 20-inch DIP force main along US-1 from Dunlawton Avenue, connecting to the North at Herbert Street.
3. Design of approximately 750-LF of 6-inch PVC water main along US-1 from Dunlawton Avenue, connecting to the North at Herbert Street.
4. 90% Design of the fiber optic conduit.
5. Coordination with the CMAR contractor through this design phase.

Task 4: CMAR Coordination

The City desires to utilize a Construction Manager at Risk (CMAR), in lieu of the traditional bid solicitation defined in the original scope of services. It is recommended to select a CMAR contractor at the completion of the 60% design phase. During the 90% design phase, the Project's phasing will be defined, and value engineering items will be identified in an effort to defer or reduce capital costs when feasible. The detailed design phase will focus on the development of construction documents including plans, specifications, and other documents supporting the establishment of a Guaranteed Maximum Price (GMP) to be negotiated by the City with the Construction Manager at Risk (CMAR). Kimley-Horn will coordinate with the CMAR on the following CMAR scope items:

- Develop and update a detailed "open book" cost model based on current market conditions to confirm budgets and help guide design decisions.
- Develop a construction management plan and schedule in advance of construction with input from Kimley-Horn.
- Provide alternative system evaluation and constructability reviews in coordination with the City and Kimley-Horn.
- Develop long-lead procurement strategies and potentially initiate early procurement of long-lead items.
- Provide procurement services for selection of key subcontractors and suppliers.
- Develop construction estimates and GMPs for construction for City review and consideration.

The relationship between the CMAR and Kimley-Horn is intended to be collaborative, with both participating as advisors to the City during the Design Phase. It is the City's desire to incorporate a contractor's perspective and input to the project planning and design decisions, and to leverage the ability for early procurement and phased construction prior to full completion of design.

The following tasks are defined as the specific efforts to be performed and completed by Kimley-Horn during the design phase of the project:

A. Draft CMAR Pre-Construction Contract Development

Coordinate with the City to provide input and review of the CMAR Pre-Construction Phase contract.

B. *Cost Model and GMP Review and Validation*

Coordinate with the CMAR and the City to provide input and information on equipment and other major capital cost items throughout the design phase and review and validate the cost model (90% and final design level) developed by the CMAR. Cost validation activities will include a review and verification of direct and indirect costs; CMAR fee and CMAR contingency; review supplier and subcontractor quotes and request supplemental quotes, as necessary; compare costs with other applicable projects; and perform review of risk analysis model and/or cost contingencies developed by the CMAR. Indirect costs included in the CMAR cost model will include applicable general conditions and general requirements, bonds, insurance and sales tax.

Using the cost models and GMPs as the basis for the total construction costs, Kimley-Horn will coordinate with the City regarding additional City administrative costs, engineering fees, construction administration and inspection fees, and, if applicable, City contingency to develop a Total Project Cost Estimate (TPCE).

C. *Early Procurement Activities*

Kimley-Horn will coordinate with the CMAR and the City to develop an equipment and materials procurement plan, including identification of items to be selected and/or procured early based on “best value” and/or low-bid strategies, and define the parameters associated with “best value” selection as applicable. Those items and design packages selected for early procurement will also identify the acceptable manufacturers and associated bid documents requirements.

Kimley-Horn will coordinate with the CMAR and City to develop multiple packages of the applicable front-end documents, technical specification and supporting design drawings for early procurement of long-lead equipment items with the specific acceptable manufacturers; coordinate with the CMAR as part of the bidding process and prepare addenda; And assist the City and the CMAR with review of the supplier proposals and bid packages and the subsequent selection process.

It is assumed that the CMAR will be responsible for the packaging of front-end documents, technical specifications, and applicable design drawings developed by Kimley-Horn; submittal of packages to applicable manufacturers or vendors; coordination of vendor proposals; pre-selection of equipment and appurtenances; delivery of detailed design criteria and documents of selected equipment to Kimley-Horn for further use and incorporation into detailed design documents; and coordination of delivery, storage, installation, startup, and payment of procured items. Kimley-Horn has assumed up to four early procurement packages will be developed.

D. *General CMAR Coordination*

General coordination with the CMAR during the design Phase will include:

- Coordination with the City regarding development of the CMAR construction

and/or post-construction phase contract and applicable City front-end documents and Kimley-Horn's Division 1 specifications.

- Meeting with and soliciting input from the CMAR during design development as appropriate.
- Providing input to the construction management plan and schedule development.
- Evaluating alternative systems and materials proposed or suggested by the CMAR.
- Responding to constructability review comments.
- Attending subcontractor pre-selection meetings conducted by the CMAR as appropriate.

Should the City be unable or unwilling to accept the CMAR GMPs and instead decide to procure and deliver the project using a traditional "design-bid-build" delivery method, subsequent modifications to the front-end documents, technical specifications and associated design drawings specifically applicable to the CMAR delivery method will need to be updated under an amendment to this scope of work.

In addition, additional services for bidding, including the preparation of bid document sets, participating in a pre-bid conference, responding to bidder questions, preparing applicable addenda, attendance of the bid opening, assistance in evaluating bids, and participating in a pre-construction conference with the selected contractor will need to be handled under an amendment to this scope of work.

Schedule:

These services will be completed according to an agreed upon schedule with the City and will be determined once the CMAR is under contract.

Method of Compensation:

Kimley-Horn will perform these services for the total lump sum fee of $145,050, inclusive of expenses. Invoices will be billed on a percent complete basis per task. A breakdown of the fee by task is as follows:

Task	*Description*	*Subconsultant*	*Kimley-Horn*	*Lump Sum*
2a	60% Re-Design		$30,650	$53,650
	L&S - Subsurface Utility Investigation	*$23,000*		
3a	90% and Final Design	$0	$29,900	$29,900
6	CMAR Coordination	$0	$61,500	$61,500
	SubTotal	$23,000	$122,050	$145,050
Total				**$145,050**

Other Special Terms:

Services provided under this agreement will be invoiced on a monthly basis. All invoices will include a description of services provided.

ACCEPTED:

Kimley»Horn

CITY OF PORT ORANGE, FLORIDA	KIMLEY-HORN AND ASSOCIATES, INC.
BY: See Change Order No. 1 Page 4	BY: _____ Jon Martin, PE
TITLE: _____	TITLE: Sr. Vice President
DATE: _____	DATE: _____

City of Port Orange
Public Utilities and Works Department

TO: Wayne Clark, City Manager

THRU: Lynn Stevens, Public Works and Utilities Director
Julia Wiggins, Public Works and Utilities Business Manager

FROM: Junos Reed P.E., Engineering and Construction Manager

DATE: August 24, 2022

SUBJECT: Kimley-Horn & Associates, Inc. - Change Order 1 Standard Contract for Services CA7244 as it relates to RFSQ 20-02, 20-Inch Force Main River Crossing Design

REQUEST:
The Public Works & Utilities Department is requesting City Council approval Change Order 1 to Standard Contract for Services CA7244 with Kimley-Horn & Associates, Inc. for the 20-Inch Force Main River Crossing Design as described under RFSQ- 20-02 will extend the completion date for an additional two (2) years; October 7, 2022 to October 7, 2024 the amount of $145,050, revised contract amount of $733,785.

PURPOSE:
Change Order 1 is needed for the re-design of the western portion of the 20-Inch Force Main to avoid impacts to the proposed development along the Riverwalk area. Additionally, the Change Order will cover additional services related to utilizing a Construction Manager at Risk (CMAR) to construct the project and provide an additional two (2) years for completion.

CONSIDERATION:
The design changes needed include adjusting the location crossing the Halifax River on the western side of the route to directly parallel Dunlawton Avenue, as well as extending the force main north along US-1 approximately 750 LF from Dunlawton Avenue to Herbert Street. There is an existing cast iron water main within the same corridor on US 1. The Change Order also includes the design to replace this existing cast iron water main between Dunlawton Avenue and Herbert Street to better service the redevelopment in the area.

The City of Port Orange operates a sanitary sewer Water Reclamation Facility (WRF) that provides service to the City of Port Orange, Daytona Beach Shores & Ponce Inlet. The average daily flow from the barrier islands is approximately 1.0 million Gallons (MGD). The towns of Daytona Beach Shores and Ponce Inlet are barrier islands and are separated from the City of Port Orange by the Intercostal Water Way & the Halifax River.

Wastewater from the barrier islands is transmitted to the City's Water Reclamation Facility via 20" Ductile Iron Pipe (DIP) subaqueous force main which was constructed in the late 1980's. The City has determined the need to replace the existing DIP force main with a new High-Density Polyethylene (HDPE) force main to ensure uninterrupted sewer service for Daytona Beach Shores and Ponce Inlet.

FUNDING:
Sewer System Rehab – Force Main River Crossing
Fund: 405
Fund Name: Water & Sewer Impact Fees
Cost Center: Water & Sewer
Program: Wastewater Treatment
Spend Category: Sewage-Capital
Current Budget: $691,163
Actual: $145,050

RECOMMENTATION:
The Public Works & Utilities Department recommends City Council approve Change Order 1 to Standard Contract for Services CA7244 with Kimley-Horn & Associates, Inc. for the 20-Inch Force Main River Crossing Design as described under RFSQ- 20-02 will extend the completion date for an additional two (2) years; October 7, 2022 to October 7, 2024 the amount of $145,050, revised contract amount of $733,785.

ANTICIPATED SCHEDULE:
a) Council Meeting: September 20, 2022
b) The Change order will extend the contract by two years and provide additional funding

ATTACHMENTS:
a) Change Order 1 to Professional Services Contract CA7244 draft documents
b) Kimley Horn Change Order 1 Proposal
c) Executed Standard Contract for Services CA7244
d) Executed Notice to Proceed

CITY OF PORT ORANGE
STANDARD CONTRACT FOR SERVICES

This Standard Contract for Services ("Contract") is entered into this 9th day of February, 2021, by and between the **CITY OF PORT ORANGE**, a Florida municipal corporation, whose principal address is 1000 City Center Circle, Port Orange, Florida 32129 (the "City"), and **KIMLEY-HORN AND ASSOCIATES, INC.**, a North Carolina corporation whose principal address is 421 Fayetteville Street, Suite 600, Raleigh, North Carolina 27601 ("Contractor"). The City and Contractor are collectively referred to herein as the "Parties."

1. *Provision of Services*

   (a) The Contractor hereby agrees to professional consulting services, which shall include the design, permitting, and construction administration for a 20-inch subaqueous sanitary sewer force main river crossing, and as further described in Request for Statement of Qualifications 20-02 ("RFSQ 20-02"). This Contract together with RFSQ 20-02, Addendum No. 1, and Contractor's submittal, all of which may be referred to as the "Contract" and all of which are made a part hereof by reference, shall constitute the formal written contract between the City and Contractor. For convenience, Section 3, Scope of Services/Work and Requirements from RFSQ 20-02, and the Contractor's Submittal and Proposal are available in the Office of the City Clerk. Contractor represents that they are familiar with the documents that make up the Contract, as referenced hereinabove.

   (b) The time, manner and place for performance of such services shall be:

   Term: The term of this Contract shall become effective on the last date the Contract is signed by the Parties ("Effective Date"). Upon issuance of a written Notice to Proceed, Contractor shall have eighteen (18) months for design and permitting, with an additional thirty (30) days thereafter for final completion ("Term").

   Manner and Place: The work shall be performed in accordance with and in a manner as required by all current federal, state, county, fire, building and land development codes, laws, ordinances and regulations, and with applicable permits and licenses per the City Code of Ordinances.

   Time and Essence: Contractor acknowledges that time is of the essence for this Contract.

   Authorization for Services: This Contract standing alone does not authorize the purchase of any goods or services or require the City to place any orders for goods or service. Authorization for the purchase of goods or services from Contractor under this Contract shall be upon issuance of a Notice to Proceed and a written Purchase Order issued by the City and executed by the City Manager. The City reserves the right to contract with other parties for the goods and services contemplated by this Contract, as determined in the City's sole and absolute discretion.

2. *City Obligations*. In return for the services identified above, the City agrees to compensate the Contractor at the pricing set forth in Exhibit "1," attached hereto, in an amount not to exceed Five Hundred Eighty-Eight Thousand Seven Hundred Thirty-Five and 00/100 Dollars ($588,735.00). All payments shall be governed by the Local Government Prompt Payment Act as set forth in Sections 218.70 through 218.79, Florida Statutes, as amended.

3. *Contract Administration*. The Public Works and Utilities Director, Lynn Stevens, shall perform contract administration of this Contract. The City may change the contract administrator, from time to time and at any time, upon written notice to Contractor. For notice provisions, see the paragraph below entitled "Notice."

4. *Liens*. Contractor acknowledges that Contractor shall not be entitled to lien the City or other public property.

5. *Termination for Convenience of the City*

(a) The parties agree that the City may terminate this Contract, or any work or delivery required hereunder, from time to time either in whole or part, whenever the City Manager of Port Orange shall determine that such termination is in the best interest of the City.

(b) Termination, in whole or in part, shall be effected by delivery of a Notice of Termination signed by the City Manager or his designee, mailed or delivered to the Contractor, and specifically setting forth the effective date of termination.

(c) Upon receipt of such Notice, the Contractor shall:

(i) cease any further deliveries or work due under this Contract, on the date, and to the extent, which may be specified in the Notice;

(ii) place no further orders with any subcontractors except as may be necessary to perform that portion of this Contract not subject to the Notice;

(iii) terminate all subcontracts except those made with respect to contract performance not subject to the Notice;

(iv) settle all outstanding liabilities and claims which may arise out of such termination, with the ratification of the Finance Director of Port Orange; and

(v) use best efforts to mitigate any damages which may be sustained by the Contractor as a consequence of termination under this clause.

(d) After complying with the provisions of subparagraph (c), above, the Contractor shall submit a termination claim, in no event later than six (6) months after the effective date of termination, unless one or more extensions of three (3) months each are granted by the Finance Director.

(e) The Finance Director, with the approval of the City Manager, shall pay from the using department's budget, reasonable costs of termination, including a reasonable amount for profit on supplies or services delivered or work completed. In no event shall this amount be greater than the original contract price, reduced by any payments made prior to Notice of Termination, and further reduced by the price of the supplies not delivered or the services not provided. This Contract shall be amended accordingly, and the Contractor shall be paid the agreed amount.

(f) In the event that the parties cannot agree on the whole amount to be paid to the Contractor by reason of termination under this clause, the Finance Director shall pay the Contractor the amounts determined as follows, without duplicating any amounts which may have already been paid under the preceding paragraph of this clause:

(i) With respect to all Contract performance prior to the effective date of Notice of Termination, the total of:

(1) the cost of work performed or supplies delivered;

(2) the cost of settling and paying any reasonable claims as provided in paragraph (c) (iv), above;

(3) a sum as profit on (a) determined by the Finance Director to be fair and reasonable.

(ii) The total sum to be paid under (i) above shall not exceed the contract price, as further reduced by the contract price of work or supplies not terminated.

(g) In the event that the Contractor is not satisfied with any payments which the Finance Director shall determine to be due under this clause, the Contractor may appeal any claim to the City Council in accordance with Paragraph 23 of this contract concerning disputes.

6. *Termination for Convenience for Subcontractors*. In accordance with the termination for the convenience of the City provision of this contract, the Contractor shall include similar provisions in any subcontract, and shall specifically include a requirement that subcontractors make all reasonable efforts to mitigate damages which may be suffered. Failure to include such provisions shall bar the Contractor from any recovery from the City whatsoever of loss or damage sustained by a subcontractor as a consequence of termination for convenience.

7. *Termination for Default*. Either party may terminate this Contract, without further obligation, for the default of the other party or its agents or employees with respect to any agreement or provision contained herein. In the event of default by the contractor, the City reserves the right to procure the item(s) bid from other sources and holds the bidder responsible for excess costs incurred as a result. City Council may elect to refrain from doing business with the bidder as stipulated in City Code 2-276 Suspension and Disbarment.

8. *Examination of Records*

(a) The Contractor agrees that the City, or any duly authorized representative, shall, until the expiration of five (5) years after final payment hereunder, have access to and the right to examine and copy any pertinent books, documents, papers and records of the Contractor involving transactions related to this Contract.

(b) The Contractor further agrees to include in any subcontract for more than $10,000 entered into as a result of this Contract, a provision to the effect that the subcontractor agrees that the City or any duly authorized representative shall, until the expiration of five (5) years after final payment under the subcontract, have access to and the right to examine and copy any pertinent books, documents, papers and records of such contractor involved in transactions related to such subcontract, or this Contract. The term subcontract as used herein shall exclude purchase orders for public utility services at rates established for uniform applicability to the general public.

(c) The period of access provided in subparagraphs (a) and (b) above for records, books, documents and papers which may relate to any arbitration, litigation, or the settlement of claims arising out of the performance of this contract or any subcontract shall continue until any appeals, arbitration, litigation or claims shall have been finally disposed of.

9. *Public Records Compliance*. Contractor shall comply with public records laws as set forth in Chapter 119, Florida Statutes, and shall specifically:

(a) Keep and maintain public records required by the City to perform the service.

(b) Upon request from the City's custodian of public records, provide the City with a copy of the requested record or allow the records to be inspected or copied within a reasonable time at a cost that does not exceed the cost provided in Section 119, Florida Statutes, or as otherwise provided by law.

(c) Ensure that public records that are exempt from public records disclosure requirements are not disclosed except as authorized by law for the duration of the Contract term and following completion of the Contract if the Contractor does not transfer the records to the City.

(d) Upon completion of the Contract, Contractor shall transfer to the City, at no cost, all public records in possession of the Contractor and destroy any duplicate public records that are exempt from public records disclosure requirements. All records stored electronically must be provided to the City, upon request from the City's custodian of public records, in a format that is compatible with the information technology systems of the City.

If Contractor does not comply with a public records request, the City shall deem the non-compliance a breach of this Contract, and the Contractor may be subject to penalties under Section 119.0701, Florida Statutes.

CONTRACTOR QUESTIONS RELATING TO CONTRACTOR'S DUTIES TO PROVIDE PUBLIC RECORDS RELATING TO THIS CONTRACT MUST BE FORWARDED TO THE OFFICE OF THE CITY CLERK, CITY HALL, 1000 CITY CENTER CIRCLE, PORT ORANGE, FLORIDA 32129; TELEPHONE: (386) 506-5563; E-MAIL: CITYCLERK@PORT-ORANGE.ORG.

10. *Termination for Non-Appropriation of Funds*

(a) If funds are not appropriated for any succeeding fiscal years subsequent to the one in which this contract is entered into, for the purpose of this Contract, then the City may terminate this Contract upon thirty (30) days prior written notice to the Contractor. Should termination be accomplished in accordance with this Section, the City shall be liable only for payments due through the date of termination.

(b) The City agrees that should it terminate in accordance with this Section, it shall not obtain services which are substantially equal to or similar to those for which this contract was entered into. This provision shall survive any termination of the Contract.

11. *Insurance*. Contractor shall maintain insurance, as required herein, during the life of this Contract. Contractor shall provide to the City, a certificate of insurance endorsing the City of Port Orange as an additional named insured. All insurance coverages of the Contractor shall be primary and non-contributory. All insurance coverages of the Contractor shall not seek contribution from any other insurance or self-insurance available to the City. For workers' compensation coverage, the Contractor's insurance certificate shall include the insurer's waiver of subrogation in lieu of endorsing the City as an additional insured for workers' compensation. The City shall not accept Workers' Compensation Exemptions Contractor may use leased employees if the Contractor ensures that all workers who access the jobsite are employees covered by the employee leasing company, and no non-employees are permitted to access the jobsite. Any Contractor using a leased employee shall complete the City's Leased Employee Affidavit Form Exhibit. Policies for Workers' Compensation may be issued by companies authorized as a group self-insurer by F.S. 440.572.

Policies other than Workers' Compensation shall be issued by insurers licensed and/or duly authorized under Florida Law to do business in the State of Florida and all insuring companies are required to have a minimum rating of "A-" in the "Best Key Rating Guide" published by A.M. Best & Company, Inc. Contractor shall not commence work under this Contract until the City has received a certificate or certificates of insurance with endorsement evidencing the required insurance. Insurer shall provide the City written notice of cancellation, nonrenewal or any other changes in coverage no later than thirty (30) days prior to the effective date of the change and shall provide notice to the City no later than 10 days after non-payment. The Certificates of Insurance and required insurance policies shall contain provisions that thirty (30) days prior written notice shall be given to the City of any cancellation, intent not to renew, or reduction in the policies or coverages.

Contractor shall require and ensure each of its subcontractors to maintain, until the completion of the subcontractor's work, insurance of the types and to the limits set forth herein. All insurance coverages shall be primary and non-contributory. All insurance coverages of the subcontractors shall not seek contribution from any other

insurance or self-insurance available to the City. The Contractor is responsible for ensuring that its subcontractors maintain the required coverage. Failure of the Contractor to ensure the subcontractors maintain the required coverage, shall not relieve the Contractor of any contractual responsibility, obligation or liability.

The City reserves the right to increase insurance coverage as determined for higher risk contracts.

The acceptance by the City of any Certificate of Insurance does not constitute approval or agreement by the City that the insurance requirements have been satisfied or that the insurance policy shown on the Certificate of Insurance is in compliance with this Contract and does not waive the insurance required by this Contract.

Should at any time the Contractor or subcontractors not maintain the insurance coverages required herein, the City may terminate the Contract or at its sole discretion shall be authorized to purchase such coverages and charge the Contractor for such coverages purchased. The City shall be under no obligation to purchase such insurance, nor shall it be responsible for the coverages purchased or the insurance company or companies used. The decision of the City to purchase such insurance coverages shall in no way be construed to be a waiver of any of its rights under the Contract.

Standard Insurance Requirements			
	Insurance	**Standards**	**Additional Requirements**
☒	Workers' Compensation The Contractor shall maintain coverage for its employees with statutory workers' compensation limits, and no less than the limits indicated in the Schedule of Limits for Employers' Liability. Said coverage shall include a waiver of subrogation in favor of the City. **The City will not accept elective exemptions.** Any contractor using an employee leasing company shall complete the Leased Employee Affidavit Form Exhibit.	Contract Amount / Limits Up to $10 million — Statutory/$500,000 $10 - $20 million — Statutory/$1,000,000 Contracts over $20 million To Be Determined by the City.	☐If Contract requires work on or about navigable waters, Longshoreman's and Harbor Workers' Coverage required. ☐If vessels involved, Jones Act coverage with limits of $500,000 required.
☒	Comprehensive General Liability (including Completed Operations and Contractual Liability	Limits: Combined Single Limit Bodily Injury and Property damage $1,000,000 occurrence $1,000,000 aggregate	☐When work is on or under Railroad rights of way or properties, the Contractor shall take out and maintain during the life of the Contract, Railroad protective liability and property damage insurance in amounts as requested by the Railroad.
☒	Comprehensive Business, Automobile Liability to include all owned, hired and non-owned automobiles.	Limits: Auto Liability Body Injury and Property Damage: $1,000,000 each occurrence $1,000,000 aggregate	
Additional Insurance Requirements			

☐	Property Insurance Builders Risk. Additional Coverage:	Limits:	Buildings - Completed value of Contract. "All Risk" coverage on latest ISO for or its equivalent. Permission granted to occupy. Owner named as insured AIMA	If Agreement requires handling or installation of Owner's equipment, coverage should be furnished on "All Risk" form, including transit and Owner shall be named.
☒	Professional Liability	Limits:	Coverage - $1,000,000	
☐	Installation Floater (IT)	Limits:	Coverage - $ To be determined.	
☐	Contractor Pollution Liability	Limits:	Coverage - $1,000,000	
☐	Errors and Omissions	Limits:	Coverage - $1,000,000	
☐	Umbrella Policy	Limits:	Coverage – $ To be determined.	
☐	Payment and Performance Bond Required	Limits:	Coverage - Equal to amount of Contract.	
☐	**City Manager waives Payment and Performance Bond for work under $100,000.00.**			
☐	**Unless otherwise required by law, City Manager waives Insurance for FOB goods under $25,000.00.**			

12. *A Contract for the purchase* of supplies shall be governed by the City of Port Orange Code of Ordinances, as amended, and such supplies shall be deemed "goods," as defined therein.

13. *Assignability of Contract*. Neither this contract, nor any part hereof, may be assigned by the Contractor to any other party without the express written approval of the City Council.

14. *Modifications or Changes to this Contract*

(a) Change Orders. The Department Head, with the concurrence of the City's signatory as required by the City's Purchasing Policy, shall without notice to any sureties, have the authority to order changes in this Contract which affect the cost or time of performance. Such changes shall be ordered in writing specifically designated to be a change order. Such orders shall be limited to reasonable changes in the services to be performed or the time of the performance. The City will not be held liable for any changes which have not been properly authorized and approved in accordance with this Contract.

(b) If any change under this clause causes an increase or decrease in Contractor's cost of, or time required for the performance of the work hereunder, Contractor shall receive an equitable adjustment in accordance with subparagraph (d), which shall include all compensation to the Contractor, or the City, of any kind in connection with such change, including all costs and damages related to or incidental to such change.

(c) Contractor need not perform any work described in any change order unless it has received a certification from the City that there are funds budgeted and appropriated sufficient to cover the cost of such changes.

(d) No claim for changes ordered hereunder shall be considered if made after final payment in accordance with the Contract.

15. *Sovereign Immunity*. The City expressly retains all rights, benefits and immunities of sovereign immunity in accordance with Section 768.28, Florida Statutes. Notwithstanding anything set forth in any section of this Contract to the contrary, nothing in this Contract shall be deemed as a waiver of immunity or limits of liability of the City beyond any statutory limited waiver of immunity or limits of liability which may have been adopted by the Florida Legislature or may be adopted by the Florida Legislature and the cap on the amount and liability of the City for damages regardless of the number or nature of claims in tort or equity shall not exceed the dollar amount set by the legislature

for tort. Nothing in this Contract shall inure to the benefit of any third party for the purpose of allowing any claim against the City which would otherwise be barred under the Doctrine of Sovereign Immunity or operation of law.

16. *Liability for Loss or Damage*. Contractor shall be liable for any loss of, or damage to, City property to the extent caused by the negligence, recklessness, or intended wrongful misconduct of Contractor, his/its agents, servants and employees and shall indemnify and hold harmless the City, and its officers and employees from liabilities, damages, losses, and costs, including but not limited to, reasonable attorney's fees, to the extent caused by negligence, recklessness, or intentionally wrongful conduct of the Contractor and other persons employed or utilized by the Contractor in the performance of the Contract. Contractor shall submit a full written report to the Finance Director within twenty-four (24) hours following the occurrence of such damage, loss or injury.

17. *Non-discrimination*. During the performance of this Contract, Contractor agrees as follows:

(a) Contractor will not discriminate against any employee or applicant for employment because of race, religion, color, sex, disability, marital status, age or national origin, except where such is a bona-fide occupational qualification reasonably necessary to the normal operation of Contractor. Contractor agrees to post in conspicuous places, available to employees and applicants for employment, notices setting forth the provisions of this non-discrimination clause. Contractor agrees and fully supports and complies with the Americans with Disabilities Act of 1990.

(b) Contractor shall state in all solicitations or advertisements for employees placed by or on behalf of Contractor that Contractor is an equal opportunity employer.

(c) Notices, advertisements and solicitations placed in accordance with federal law, rule or regulation shall be deemed sufficient compliance with this provision. Contractor shall include the provisions of the foregoing subparagraphs (a), (b), and (c) in every subcontract or purchase order of over $10,000 so that the provisions will be binding upon each subcontractor or vendor.

18. *Disputes*. The City Manager, who shall reduce his decision to writing and mail or otherwise furnish a copy thereof to Contractor, shall decide disputes with respect to this Agreement. The decision by the City Manager shall be final and binding unless, within five (5) business days from the date of delivery of the decision of the City Manager, appeal is made to the City Council in writing and delivered to the City Clerk, Robin L. Fenwick, MMC. The decision of the City Council shall be final and binding unless set aside by a court of competent jurisdiction as fraudulent, capricious, arbitrary, or so grossly erroneous as necessary to imply bad faith, or not to be supported by any evidence.

19. *Force Majeure*. Neither party shall be liable for any delay in performance or failure to perform any obligation hereunder if, and to the extent that, such failure or delay is caused by an event of Force Majeure. Force Majeure shall mean any act, event or condition that is beyond the party's reasonable control, that materially and adversely affects the party's ability to perform its obligations hereunder, and that is not the result of the party's willful neglect, error, omission or failure to exercise reasonable due diligence.

20. *Controlling Law*. **THIS AGREEMENT CONTAINS IMPORTANT MATTERS AFFECTING LEGAL RIGHTS AND IS ACCEPTED AND ENTERED INTO IN FLORIDA AND ANY QUESTION REGARDING ITS VALIDITY, CONSTRUCTION, ENFORCEMENT, OR PERFORMANCE SHALL BE GOVERNED BY FLORIDA LAW. ANY LEGAL PROCEEDING ARISING FROM OR IN ANY WAY REGARDING THE AGREEMENT SHALL HAVE ITS VENUE LOCATED EXCLUSIVELY IN THE CIRCUIT COURT OF VOLUSIA COUNTY, FLORIDA, AND THE PARTIES HEREBY EXPRESSLY CONSENT AND SUBMIT THEMSELVES TO THE PERSONAL JURISDICTION AND VENUE OF THE COURT.**

21. *Additional Provisions*. This Contract includes all additional provisions as may have been outlined in written quotes and purchase orders and any attachments or exhibits to this Contract whether delivered herewith or subsequently approved as a part hereof, such as drawings or technical specifications prepared in the performance of this work. In the event of a conflict between any attachments or exhibits to this Contract, and this Contract, the language of this Contract shall control.

22. *Integration*. This Contract and the documents incorporated herein by reference shall constitute the whole agreement between the parties. There are no promises, terms, conditions, or obligations other than those contained herein, and this Contract shall supersede all previous communications, representations, or agreements, written or verbal, between the parties hereto.

23. *Notice*. For purposes of this agreement, notices shall be sent as follows:

City:
City of Port Orange
Attention: City Manager
1000 City Center Circle
Port Orange, Florida 32129
(386) 506-5501

Copy to:
City of Port Orange
Attention: Lynn Stevens, Public Works and Utilities Director
1000 City Center Circle
Port Orange, Florida 32129
(386) 506-5750

Contractor:
Kimley-Horn and Associates, Inc. Senior
Attention: Jonathan D. Thigpen, Vice President
189 South Orange Avenue
Suite 1000
Orlando, Florida 32801
(407) 898-1511 – Telephone
(561) 863-8175 – Facsimile
Wayne.White@Kimley-Horn.com

Any notice or other communication given under the Contract will be in writing and delivered by hand, sent by facsimile (provided acknowledgement of receipt thereof is delivered to the sender), sent by certified, registered mail, or sent by any nationally recognized overnight courier service to the addresses provided herein. The parties may, from time to time and at any time, change their respective addresses and each will have the right to specify as its address any other address by at least 10 days written notice to the other party.

24. *Contract Construction*

This Agreement may be executed in one or more counterparts, each of which shall be deemed to be an original but all of which together shall constitute one and the same instrument. The delivery by facsimile or e-mail of an executed copy of this Agreement shall be deemed valid as if an original signature was delivered. No contract shall be formed between Contractor and the City until the City signs this Agreement.

25. *Authority to Sign*. Each person signing this Agreement warrants that he or she is duly authorized to do so and to bind the respective party to the Agreement.

Witnesses:

Larissa Curran

Printed Name: Larissa Curran

KELLY A. STARKEY

Printed Name: Kelly A Starkey

KIMLEY-HORN AND ASSOCIATES, INC.

By: _____

Jonathan D. Thigpen, Vice President

If this Contract is signed by an individual not identified as the President of the corporation in the records of the Florida Department of State, Division of Corporations, please provide written authorization for that individual to enter into contracts on behalf of the corporation.

Date: 1/28/2021

STATE OF FLORIDA
COUNTY OF ORANGE

The foregoing instrument was acknowledged before me by means of ✓ physical presence or ___ online notarization, this 28th day of January, 2021, by Jonathan D. Thigpen, as Vice President of Kimley-Horn and Associates, Inc., a North Carolina corporation. He is ✓ personally known or ___ produced _____ as identification.

Charlene Kunold

Notary Public, State of Florida

Printed, typed or stamped name, commission and expiration:

Notary Public State of Florida
Charlene Kunold
My Commission GG 178832
Expires 02/19/2022

Witnesses:

Ruth E. Thayne
Printed Name: RUTH E. THAYNE

Shelby Field
Printed Name: Shelby Field

CITY OF PORT ORANGE

By: _____
Donald O. Burnette, Mayor

Date: 2/9/2021

STATE OF FLORIDA
COUNTY OF VOLUSIA

The foregoing instrument was acknowledged before me by means of X physical presence or ___ online notarization, this 9th day of February 2021, by Donald O. Burnette, as Mayor of the City of Port Orange, a Florida municipal corporation, on behalf of the city. He is X personally known or ____ produced _____as identification.

Notary Public State of Florida
Ruth E. Thayne
My Commission GG 913343
Expires 10/05/2023

Ruth E. Thayne
Notary Public, State of Florida
Printed, typed or stamped name, commission and expiration:
RUTH E. THAYNE

Witnesses:

Shelby Field
Printed Name: Shelby Field

Ruth E. Thayne
Printed Name: RUTH E. THAYNE

ATTEST:

By: _____
Robin L. Fenwick, MMC, City Clerk

Date: 2/9/2021

STATE OF FLORIDA
COUNTY OF VOLUSIA

The foregoing instrument was acknowledged before me, by means of X physical presence or ___ online notarization, this 9th day of February 2021, by Robin L. Fenwick, as City Clerk of the City of Port Orange, a Florida municipal corporation, on behalf of the city. She is X personally known or ___ produced _____as identification.

Notary Public State of Florida
Ruth E. Thayne
My Commission GG 913343
Expires 10/05/2023

Ruth E. Thayne
Notary Public, State of Florida
Printed, typed or stamped name, commission and expiration:
RUTH E. THAYNE

EXHIBIT "1"

(Consisting of 9 pages)

Kimley»Horn

RFSQ 20-02 PROPOSAL FOR 20-INCH FORCE MAIN REPLACEMENT

Describing a specific agreement between Kimley-Horn and Associates, Inc. (Kimley-Horn), and The City of Port Orange (the Client or the City) in accordance with the terms of the RFSQ 20-02 20 Inch Force Main, which is incorporated herein by reference.

Project Understanding

The City currently owns and operates a 20-inch force main which crosses the Halifax River parallel to Dunlawton Avenue from approximately US-1 to S. Peninsula Drive. The City desires to design and construct a new force main along a parallel route and subsequently evaluate the existing force main for use as a redundant, emergency back-up force main.

Specific Scope of Basic Services:

Task 1: Proposed Force Main Route Analysis

Based on discussions with City staff the route of the proposed 20-inch force main can be run along two potential paths. The first path closely mirrors the existing alignment starting from the commercial drive beside the bridge on the east end of the route drilling under the river to Port Orange Causeway Park. The pipeline will then be direct buried along the island to the west end and will include a new connection to the Sea Bird Island Mobile Home Park lift station located on the south side of Dunlawton Avenue. The route will then continue west under the river to Halifax Drive to a final connection point at US 1.

A second route will be evaluated to avoid the commercial sector on the east end of the route. This route will start at Peninsula Drive and Coral Way to begin the directional drill to Sea Bird Island under the canal at the end of Coral Way. The route along Port Orange Causeway Park will be unaffected, but an alternate route across the western portion of the river will be evaluated based on future plans for the Riverwalk area and currently owned property of the City.

Geophysical Survey Plan

The bathymetric survey program will be performed by Ocean Surveys, Inc (OSI) and will consist of the acquisition of multi-sensor marine geophysical data (hydrographic, subbottom profiling, magnetometer and side scan sonar imagery) within a 400-foot wide route corridor across the river where the proposed HDD alignment is planned.

Within the route corridor sounding, subbottom profiling and magnetometer data would be acquired along a series of survey tracklines oriented parallel to the proposed HDD alignment and spaced 50 feet apart. As a means of providing quality control and confirmation of the data acquired along the primary tracklines, additional data would be acquired along a series of "tie" lines oriented perpendicular to the primary lines and spaced approximately 200 feet apart across the river. Side scan sonar imagery would be acquired along specific tracks with the intent of providing close to 100 percent overlapping coverage of the bottom within the entire survey corridor. Sonar imagery data will allow for precisely locating specific objects and features exposed on the bottom (including rock, debris, pipes, cables, rip-rap, etc.).

Based upon the understood project depth of interest, OSI would propose to utilize both a high-frequency Chirp and a lower frequency Boomer type subbottom profiler to acquire subbottom data. The intent is that the two instruments will provide a broad range of energy and frequency to

investigate the expected variable sequence of sediments expected in the river. Since site conditions (specifically the near surface sediments) control the success of the subbottom penetration and data developed, employing the two systems maximizes the probability of acquiring the most informative data on site. It should be noted though that the presence of organic rich, gaseous sediments, common in shallow river/bay environments and/or coarse surficial sediments, might limit the penetration of acoustic signals below the bottom and thus limit the effectiveness of the profiler in resolving information pertaining to subsurface conditions within the corridor. Magnetometer data will identify any features composed of ferrous metal present on or just below the bottom within the corridor that could potentially impact the project (including utilities which have a ferrous metal component). Utilities that were installed via horizontal drilling techniques (deep below the bottom) or utilities composed of nonferrous metals or fiber optic cables will not be detected.

In response to the need to perform the survey in a timely, efficient, and cost-effective manner, we would plan to utilize an OSI vessel (shallow draft 25-27 feet in length). The vessel would be outfitted with a suite of multi-sensor geophysical survey equipment that has been proven repeatedly during similar survey efforts. Field operations would be conducted by a two-person field crew equipped with the following instrumentation (or equivalent).

- Trimble RTK Global Positioning System (GPS)
- HYPACK navigation and data-logging computer system
- ODOM survey grade single beam depth sounder
- Applied Acoustics 200J 0.5-8 kHz high-resolution "Boomer" subbottom profiling system interfaced with a TSS shallow seismic processor/heave compensator and data logger
- EdgeTech full-spectrum "chirp" subbottom profiler equipped with a SB216 tow vehicle (2-16 kHz transducer)
- Klein high-resolution dual-frequency side scan sonar
- Geometrics G882 cesium marine magnetometer equipped with bottom tracking altimeter

All survey units shall be in feet and referenced horizontally to the Florida State Plane Coordinate System, East Zone (0901), NAD83. Sounding data will be in feet referenced vertically to North American Vertical Datum of 1988 (NAVD 88) feet

Wetlands and Protected Species Survey

The analysis will include the following items to determine the route:

1. A conceptual design for both routes including a review session with City staff,
2. Underwater survey of the Halifax River to include river bottom and subsurface scanning of data up to 50 feet below the river bottom to provide a preliminary geophysical log of the crossing.
3. Surface survey of the land side work. This includes the work along Sea Bird Island including a crossing of Dunlawton Ave to the Sea Bird lift station, surveying from Peninsula Drive along Coral Way, surveying from Peninsula Drive along the commercial drive beside Dunlawton, the area north of Dunlawton on the mainland from the coast to US 1, and an additional location along Halifax Drive for an alternate crossing location (possibly at Herbert Street).
4. Wetlands and environmental review of the subject area to determine potential impacts in the route evaluation.
5. Specific review of points of connection,

6. Preliminary layout of Dunlawton crossing to Sea Bird Lift Station,
7. Review of operational considerations during construction,
8. Review of potential impacts to commercial and residential access,
9. Review of potential impacts to traffic,
10. Review of preliminary construction sequencing and impacts to boat ramps on Sea Bird Island,
11. This task includes up to three (3) meetings with staff to formally review the route analysis with staff to determine the development of the 30% conceptual design.

Geotechnical Investigations

Geotechnical investigations include nine borings, five in the River and four landside. The borings on land at the ends of the directional drill will be 50 feet deep. The aquatic borings will be 100 feet deep and made using an amphibious drill rig. This scope of services includes field exploration, laboratory testing, and engineering/project delivery. Field investigations will be provided in accordance with FDOT and ACOE requirements. Time has been accounted for to allow for permitted with both agencies to complete the necessary borings. The boreholes will be grout sealed after completion.

Geotechnical borings will commence after the route has been preliminarily defined to depict the route across the River as accurately as possible. The geotechnical reports will provide the following:

- Boring logs with field and laboratory data
- Stratification based on visual soil classification
- Groundwater levels observed during drilling
- Site and Boring location plans
- Subsurface exploration procedures
- Description of subsurface conditions
- Estimated seasonal groundwater fluctuations
- Recommended geotechnical engineering design parameters for directional drill design
- Recommended excavation and backfill consideration for open cut excavations.

The geotechnical engineering will be completed within ten weeks of authorization.

30% Conceptual Design

A 30% conceptual level design will be provided as the deliverable for this task. This deliverable will include the following:

1. Plan view only design plans identifying the selected route,
2. Written preliminary sequence of construction activities,
3. 30% opinion of probably construction costs,
4. Specification checklist for required technical specification sections.
5. Evaluation of maintaining existing force main as a back-up pipeline
6. Recommended operational procedures for maintaining the existing force main as a back-up force main.

Task 2: 60% Design

Once the preliminary investigations and conceptual route have been reviewed and approved design plan production can be initiated. This design will include the following services:

1. Additional surveying identified by the conceptual design. This is specifically related to points of connection to ensure sufficient data is available for completing the design. This includes SUE investigations at up to twenty (20) locations to positively identify existing infrastructure.
2. Geotechnical investigations along the route. This includes twenty (20) borings on the land side route and up to six (6) borings in the River.
3. 60% Design Plans including:
    - Cover Sheet and General Notes
    - Survey and Layout
    - Plan and Profiles
    - Cross Sections
    - Conflict Details
    - Connection Details
    - Standard Utility Details
    - Maintenance of Traffic Details
    - Stormwater Protection and Dewatering Details
    - Landscaping and Restoration Details
4. 60% Technical Specifications. Front end documents can be included and shall be provided by the City for modifications specific to this project, such as the bid form, description of work, etc.
5. 60% opinion of probable construction cost.
6. This task includes up to three (3) meetings including interim progress meetings and a 60% design review meeting.

Task 3: 90% and Final Design

Once the 60% plans have been reviewed and approved design plan production can be initiated. This design will include the following services:

1. 90% Design Plans preparation
2. 90% Technical Specifications. Front end documents can be included and shall be provided by the City for modifications specific to this project, such as the bid form, description of work, etc.
3. 90% opinion of probable construction cost.
4. 90% Review meeting with the City.
5. Revision of 90% review comments to update the design plans and specifications.
6. Preparation of final opinion of probable construction cost.
7. This task includes up to four (4) meetings including interim progress meetings and a 60% design review meeting.

Task 4: Permitting

Site Visit and Wetland Delineation

Kimley-Horn will conduct a site visit, which will include field flagging the wetlands in accordance with the State unified wetland delineation methodologies described in Chapter 62-340, Florida Administrative Code (FAC) and the United States Army Corps of Engineers (USACE) 1987 Wetland Delineation Manual and regional supplement. Kimley-Horn will coordinate with the surveyor (subconsultant) to incorporate the flags into the site plan.

Kimley-Horn will also conduct a benthic resource/submerged aquatic vegetation survey adjacent to the site, during the appropriate survey period (June through September). The benthic survey will be conducted in general accordance with the National Marine Fisheries Service (NMFS) methodology recommendations for sampling Halophila johnsonii at large-area project sites. The surveys will employ a quantitative sampling of one square meter quadrats at regular intervals along a transect line.

Each transect location will be accessed from the adjacent shoreline. Qualitative and quantitative sampling will be conducted by two biologists using snorkeling gear. The percent coverage of seagrass, species composition, substrate type, and other benthic resources will be documented at each quadrat along the transect line. Environmental conditions including weather, visibility, and tide cycles at the start and end of the surveys will be noted. Listed species or their habitat will also be noted during this site visit.

Following the survey, a technical memorandum will be prepared summarizing results, including a discussion of methodology and results, with figures illustrating location and percentage of seagrass by species within each polygon (if seagrass is present). The technical memorandums will be provided to state and federal regulatory agencies during the environmental permitting process.

FDEP

Kimley-Horn will attend a pre-application meeting with FDEP to discuss permitting effort required for this project. Kimley-Horn will prepare support documentation for a General Environmental Resource Permit Application and a general construction permit for the modification of a collection/transmission system from FDEP. For the purposes of this scope, it is assumed that the bore pits will be located in uplands and the force main will be drilled at least 14 feet below the authorized depth of a federal navigation channel. This will ensure that the project will qualify for a general permit with FDEP. This scope assumes no wetland mitigation will be required. Once the application is submitted, Kimley-Horn will respond to one Request for Available Information (RAI) from FDEP. Any additional RAIs or meetings with FDEP will be considered additional services. All application fees shall be paid by the Client.

Kimley-Horn will also prepare a Sovereign Submerged Lands lease application through FDEP for this force main. A survey and legal description will be supplied by the surveyor. Once the application is submitted, Kimley-Horn will respond to one RAI from FDEP. Any additional RAIs or meetings with FDEP will be considered additional services. All application fees shall be paid by the Client.

Federal (USACE)

Kimley-Horn will attend a pre-application meeting with USACE to discuss permitting effort required for this project. Kimley-Horn will prepare either a Nationwide Permit 12 or a Regional General Permit 14 application for submittal to the USACE. It is assumed that the force main will

be installed a minimum of 14 feet below the authorized depth of a federal channel, including a minimum of 25 feet outside channel edges, and bore pits will be more than 50 feet from top of bank of the Halifax River. These conditions will ensure that the project qualifies for the Nationwide 12 Permit or Regional General Permit 14. The application will include site plan drawings indicating the limits of proposed on-site excavation and fill areas, limits of existing wetlands and surface waters delineated in Task 1 (if applicable), proposed impacts to existing wetlands and surface waters (if applicable), and typical sections illustrating the proposed on-site excavation/fill activities.

Kimley-Horn will coordinate with the USACE Section 408. Kimley-Horn will also coordinate with the USACE Real Estate Division to obtain a consent-to-easement.

It is assumed no wetland mitigation will be required from the USACE. Once the application is submitted, Kimley-Horn will respond to one RAI. Any additional RAIs or meetings with USACE will be considered additional services. All permit application fees shall be paid by the Client.

Kimley-Horn will also coordinate with the US Fish and Wildlife Service (USFWS) (during the USACE permitting process) regarding possible listed species impacts (i.e. West Indian manatee, sea turtles). If the USFWS requires detailed listed species surveys, then a separate scope and fee will be prepared. Kimley-Horn will also coordinate with the National Marine Fisheries Service (NMFS) (during the USACE permitting process) regarding possible Essential Fish Habitat (EFH) impacts. If the NMFS requires detailed listed species surveys, then a separate scope and fee will be prepared.

Task 5: Bidding Services

A. Prepare one (1) separate bid package consisting of plans, permits, and specifications (in CSI or EJCDC format) to be included in the City's bid package.

B. Participate in one (1) pre-bid conference as the City's engineering representative. The City will be responsible for coordinating, scheduling, and administering the pre-bid conference.

C. Respond to Requests for Information (RFIs) and prepare bid addenda as necessary during the bid process. The City will be responsible for addenda distribution.

D. Review the bid responses and tabulate the results and provide the City with a written bid tabulation record along with a selection recommendation.

Schedule:

These services will be completed as expeditiously as possible. The initial submittal is projected to be completed within six months of authorization. 60% design is projected to be completed 4 months later and final design completed in an additional 3 months. Considering permitting and bidding, a total project time of 15 months is estimated.

Deliverables:

Deliverables for this project include the following:

- Preliminary route analysis including surveys and environmental
- 60% plans, technical specifications, opinion of probable construction costs, and

Kimley»Horn

geotechnical report

- 90% plans, specifications, opinion of probable construction costs
- Bid Ready plans, specifications and final opinion of probable construction costs.
- Existing force main evaluation report

Method of Compensation:

Kimley-Horn will perform these services for the total lump sum fee of $588,735, inclusive of expenses. Invoices will be billed on a percent complete basis per task. A breakdown of the fee by task is as follows:

Task	*Description*	*Subconsultant*	*Kimley-Horn*	*Lump Sum*
1	Route Analysis		$111,283	$252,919
	OSI – Bathymetric Survey	*$77,352*		
	L&S – Land Surveying	*$64,284*		
2	60% Design		$114,994	$204,938
	Terracon - Geotechnical	*$84,444*		
	L&S - Subsurface Utility Investigation	*$5,500*		
3	90% Design	$0	$85,090	$85,090
4	Permitting	$0	$32,285	$32,285
5	Bidding Services	$0	$13,503	$13,503
	SubTotal	$231,580	$357,155	
Total				**$588,735**

Other Special Terms:

Services provided under this agreement will be invoiced on a monthly basis. All invoices will include a description of services provided.

ACCEPTED:

CITY OF PORT ORANGE, FLORIDA

BY:_____

TITLE:_____

DATE:_____

KIMLEY-HORN AND ASSOCIATES, INC.

BY: _____
Jon Martin, PE

TITLE: Sr. Vice President

DATE:_____

20" Subaqueous Sanitary Sewer Force Main Design RFSQ

Project Background:

The City of Port Orange operates a sanitary sewer Water Reclamation Facility (WRF) that provides service to the City of Port Orange and the Towns of Daytona Beach Shores & Ponce Inlet. The Towns of Daytona Beach Shores and Ponce Inlet are barrier islands and are separated from the City of Port Orange by the Intercostal Water Way & the Halifax River. Wastewater from the Barrier Islands is transmitted to the Cities Water Reclamation Facility via 20" Ductile Iron Pipe (DIP) subaqueous force main which was constructed in the late 1980's. The City has determined the need to replace the existing DIP force main with a new DIP force main with a new High-Density Polyethylene (HDPE) force main to ensure uninterrupted sewer service for Daytona Beach Shores and Ponce Inlet. The average daily flow from the barrier islands is approximately 1.0 Millions of Gallons (MGD).

Scope:

The City of Port Orange Public Utilities is seeking the service of professional consultants to provide the design, permitting, and construction administration of a 20" subaqueous sanitary sewer force main river crossing. The scope of services shall consist of, but not limited to, the following:

- Existing force main conditions assessment
- Pre-design services (geotechnical engineering & survey)
- Replacement force main design
- Permitting
- Construction phase services
- As-built preparation and certification

Qualifications/Certifications:

The preferred firm will have a current Professional Registration Certificate from the appropriate governing board. The firm must be properly registered at the time of submittal to practice their profession in the State of Florida. Provide professional certifications of staff such as Professional Engineer (P.E) and other relevant professional titles/accomplishments related to the proposed project.

Evaluation Method:

The City will appoint a committee consisting of department staff to evaluate the proposals and to make recommendation to the City Council. The City will be the sole judge of its own best interests, the proposals, and the resulting contract. The Cities decisions will be final. Award will be made to the proposal, which presents the best value to the City based on the entire evaluation process and all of the information gathered. The City may require the short-listed firm(s) to do an oral presentation or have discussions by proposed team relative to their specific experience on similar projects. The selection process shall be in accordance to Consultants' Competitive Negotiation Act (CCNA) process. Although, each member of the

evaluation committee independently examines the proposals prior to the meeting, the short-listing or selectin of the firm(s) is determined by the consensus of the committee.

Evaluation Criteria:

In determining a firm's qualifications, the following criteria will be considered based on qualifications, experience and project approach:

- Professional license, certifications, titles, and accomplishments of staff;
- Credentials, qualifications and years' experience of the staff for both the prime and sub consultants and key personnel as presented by resumes, education, and training;
- Number of years prime and sub consultants worked together;
- Experience in providing similar projects;
- Overall project approach to support the needs and objectives of the project;
- Quality of performance or previous contracts or services;
- Whether the firm can perform the contract or provide the service within budget requirements, promptly or within the time specified, without delay or interference;
- Quality, availability and adaptability of the contractual services to the particular use required;
- Sufficiency of the financial resources and ability of the firm to perform the contract or provide the services;
- Character, integrity, reputation, judgment, and efficiency of the firm;
- Previous and existing compliance by the firm with laws and ordinance relating to the contract or services;
- The number of professional staff, education, and years' experience in public utilities engineering including support staff such as Geographic Information Systems (GIS) specialists, surveyors, Computer Aided Design and Drafting Technician (CADD) Techs, Construction Engineering Inspectors (CEI), etc.;
- Documented experience with State (Water Management District, Department of Environmental Protection DEP) and Federal (Environmental Protection Agency EPA, Army Corps.) permitting/regulatory programs related to the proposed project;
- Documented projects (with references) which demonstrate proficiency and experience in projects of a similar nature in scope and complexity to the proposed project;
- Location of office facilities and staff.

CITY OF PORT ORANGE
NOTICE TO PROCEED

Issued By: **Junos Reed, P.E. Eng & Const Mgr.**
Public Works
1000 City Center Circle
Port Orange, FL 32129
Ph:(386)506-5754
jureed@port-orange.org

Issued To: **Kimley-Horn & Associates, Inc.**
Attn: Steve Romano, PE
189 S Orange Ave, Suite 1000
Orlando, FL, 32801
Ph: (321)239-5958
steve.romano@kimley-horn.com

PROJECT TITLE: **RFSQ 20-02 20-inch Force Main River Crossing**
PO NO. **001112**

This **Notice to Proceed** issued to your company is for the above referenced project and in accordance the Standard Contract for Services CA7244 dated February 9, 2021 and all terms and conditions of the agreement between the City of Port Orange and Kimley-Horn & Associates, Inc. The **effective date** of this **Notice to Proceed** is March 8, 2021 with a **Final Completion** date of October 7, 2022.

Please sign below acknowledging and agreeing to the contents of this Notice to Proceed and return a copy of this form to the Lynn Stevens, Public Works & Utilities Director via email and the original to the address below:

Project Manager: Junos Reed

All future correspondence or requests for changes to the contract must be addressed to the Director.

ISSUED BY:

Owner: City of Port Orange

This 8th day of March 2021.

By: Junos Reed
Junos Reed, P.E.

Title: Engineering & Construction Mgr.

ACCEPTANCE NOTICE:

Receipt of the foregoing Notice to Proceed is hereby acknowledged and agreed by:

Company: Kimley-Horn & Associates

This 8 day of March 2021

By: [signature]

Title: Associate

Kimley»Horn

CHANGE ORDER NO. 1 TO

STANDARD SERVICES CONTRACT CA7244 AS IT RELATES TO RFSQ 20-02 - 20-INCH FORCE MAIN REPLACEMENT

Describing a specific agreement between Kimley-Horn and Associates, Inc. (Kimley-Horn), and The City of Port Orange (the Client or the City) in accordance with the terms of Standard Services Contract CA7244 as it relates to RFSQ 20-02 20 Inch Force Main Replacement, which is incorporated herein by reference.

Project Understanding

The City currently owns and operates a 20-inch force main which crosses the Halifax River parallel to Dunlawton Avenue from approximately US-1 to S. Peninsula Drive. The City desires to add scope to the existing contract to include the re-design of the western portion of the Force Main due to the proposed development along the Riverwalk area. These changes include adjusting the location crossing the Halifax River on the western side of the route to directly parallel Dunlawton Avenue, as well as extending the force main north along US-1 approximately 750 LF from Dunlawton Avenue to Herbert Street. There is an existing cast iron water main within the same corridor on US 1. The City desires to replace this existing cast iron water main between Dunlawton Avenue and Herbert Street while working in the area. Additionally, the City has requested the design of a fiber optic cable crossing of the Halifax River to be designed in parallel with the force main crossing.

Specific Scope of Basic Services:

<u>Task 2a: 60% Redesign Services</u>

Due to the realignment of a portion of the route and the additional services requested, a revised set of 60% plans will be prepared.

1. Perform additional survey and locate services along US 1 between Dunlawton Avenue and Herbert Street.

2. 60% Redesign of the western force main route, between the Port Orange Causeway Park and Halifax Drive. The proposed force main will be designed to run parallel to Dunlawton Avenue and will continue to US-1. This revised route includes approximately 1500-LF of 24-inch force main.
3. 60% Design of approximately 750-LF of 20-inch DIP force main along US-1 from Dunlawton Avenue, connecting to the North at Herbert Street.
4. 60% Design of approximately 750-LF of 6-inch PVC water main along US-1 from Dunlawton Avenue, connecting to the North at Herbert Street.
5. 60% Design of a fiber optic conduit sized to the City's specifications.
6. 60% review meeting with staff

<u>Task 3a: 90% Redesign and Final Design</u>

Based on comments provided at the 60% design level, Kimley-Horn adds the following services to this task:

1. Redesign of the western force main route, between the Port Orange Causeway Park and Halifax Drive. The proposed force main will be designed to run parallel to Dunlawton

Avenue and will continue to US-1. This revised route includes approximately 1500-LF of 24-inch force main.

2. Design of approximately 750-LF of 20-inch DIP force main along US-1 from Dunlawton Avenue, connecting to the North at Herbert Street.
3. Design of approximately 750-LF of 6-inch PVC water main along US-1 from Dunlawton Avenue, connecting to the North at Herbert Street.
4. 90% Design of the fiber optic conduit.
5. Coordination with the CMAR contractor through this design phase.

Task 4: CMAR Coordination

The City desires to utilize a Construction Manager at Risk (CMAR), in lieu of the traditional bid solicitation defined in the original scope of services. It is recommended to select a CMAR contractor at the completion of the 60% design phase. During the 90% design phase, the Project's phasing will be defined, and value engineering items will be identified in an effort to defer or reduce capital costs when feasible. The detailed design phase will focus on the development of construction documents including plans, specifications, and other documents supporting the establishment of a Guaranteed Maximum Price (GMP) to be negotiated by the City with the Construction Manager at Risk (CMAR). Kimley-Horn will coordinate with the CMAR on the following CMAR scope items:

- Develop and update a detailed "open book" cost model based on current market conditions to confirm budgets and help guide design decisions.
- Develop a construction management plan and schedule in advance of construction with input from Kimley-Horn.
- Provide alternative system evaluation and constructability reviews in coordination with the City and Kimley-Horn.
- Develop long-lead procurement strategies and potentially initiate early procurement of long-lead items.
- Provide procurement services for selection of key subcontractors and suppliers.
- Develop construction estimates and GMPs for construction for City review and consideration.

The relationship between the CMAR and Kimley-Horn is intended to be collaborative, with both participating as advisors to the City during the Design Phase. It is the City's desire to incorporate a contractor's perspective and input to the project planning and design decisions, and to leverage the ability for early procurement and phased construction prior to full completion of design.

The following tasks are defined as the specific efforts to be performed and completed by Kimley-Horn during the design phase of the project:

A. Draft CMAR Pre-Construction Contract Development

Coordinate with the City to provide input and review of the CMAR Pre-Construction Phase contract.

B. *Cost Model and GMP Review and Validation*

Coordinate with the CMAR and the City to provide input and information on equipment and other major capital cost items throughout the design phase and review and validate the cost model (90% and final design level) developed by the CMAR. Cost validation activities will include a review and verification of direct and indirect costs; CMAR fee and CMAR contingency; review supplier and subcontractor quotes and request supplemental quotes, as necessary; compare costs with other applicable projects; and perform review of risk analysis model and/or cost contingencies developed by the CMAR. Indirect costs included in the CMAR cost model will include applicable general conditions and general requirements, bonds, insurance and sales tax.

Using the cost models and GMPs as the basis for the total construction costs, Kimley-Horn will coordinate with the City regarding additional City administrative costs, engineering fees, construction administration and inspection fees, and, if applicable, City contingency to develop a Total Project Cost Estimate (TPCE).

C. *Early Procurement Activities*

Kimley-Horn will coordinate with the CMAR and the City to develop an equipment and materials procurement plan, including identification of items to be selected and/or procured early based on “best value” and/or low-bid strategies, and define the parameters associated with “best value” selection as applicable. Those items and design packages selected for early procurement will also identify the acceptable manufacturers and associated bid documents requirements.

Kimley-Horn will coordinate with the CMAR and City to develop multiple packages of the applicable front-end documents, technical specification and supporting design drawings for early procurement of long-lead equipment items with the specific acceptable manufacturers; coordinate with the CMAR as part of the bidding process and prepare addenda; And assist the City and the CMAR with review of the supplier proposals and bid packages and the subsequent selection process.

It is assumed that the CMAR will be responsible for the packaging of front-end documents, technical specifications, and applicable design drawings developed by Kimley-Horn; submittal of packages to applicable manufacturers or vendors; coordination of vendor proposals; pre-selection of equipment and appurtenances; delivery of detailed design criteria and documents of selected equipment to Kimley-Horn for further use and incorporation into detailed design documents; and coordination of delivery, storage, installation, startup, and payment of procured items. Kimley-Horn has assumed up to four early procurement packages will be developed.

D. *General CMAR Coordination*

General coordination with the CMAR during the design Phase will include:

- Coordination with the City regarding development of the CMAR construction

and/or post-construction phase contract and applicable City front-end documents and Kimley-Horn's Division 1 specifications.

- Meeting with and soliciting input from the CMAR during design development as appropriate.
- Providing input to the construction management plan and schedule development.
- Evaluating alternative systems and materials proposed or suggested by the CMAR.
- Responding to constructability review comments.
- Attending subcontractor pre-selection meetings conducted by the CMAR as appropriate.

Should the City be unable or unwilling to accept the CMAR GMPs and instead decide to procure and deliver the project using a traditional "design-bid-build" delivery method, subsequent modifications to the front-end documents, technical specifications and associated design drawings specifically applicable to the CMAR delivery method will need to be updated under an amendment to this scope of work.

In addition, additional services for bidding, including the preparation of bid document sets, participating in a pre-bid conference, responding to bidder questions, preparing applicable addenda, attendance of the bid opening, assistance in evaluating bids, and participating in a pre-construction conference with the selected contractor will need to be handled under an amendment to this scope of work.

Schedule:

These services will be completed according to an agreed upon schedule with the City and will be determined once the CMAR is under contract.

Method of Compensation:

Kimley-Horn will perform these services for the total lump sum fee of $145,050, inclusive of expenses. Invoices will be billed on a percent complete basis per task. A breakdown of the fee by task is as follows:

Task	*Description*	*Subconsultant*	*Kimley-Horn*	*Lump Sum*
2a	60% Re-Design		$30,650	$53,650
	L&S - Subsurface Utility Investigation	*$23,000*		
3a	90% and Final Design	$0	$29,900	$29,900
6	CMAR Coordination	$0	$61,500	$61,500
	SubTotal	$23,000	$122,050	$145,050
Total				**$145,050**

Other Special Terms:

Services provided under this agreement will be invoiced on a monthly basis. All invoices will include a description of services provided.

ACCEPTED:

CITY OF PORT ORANGE, FLORIDA	KIMLEY-HORN AND ASSOCIATES, INC.
BY:_____	BY: _____ Jon Martin, PE
TITLE:_____	TITLE: Sr. Vice President
DATE:_____	DATE:_____

CITY COUNCIL AGENDA ITEM

COUNCIL MEETING DATE 9/20/2022

SUBJECT: (C8d) Approval of Task Authorization No. 1 under the Master Contract for Professional Engineering Services CA7763 to Zev Cohen and Associates, Inc for services relating to the Design and Bidding Assistance for the City Center Exterior Improvement Project.

DEPARTMENT: Public Utilities

GOAL: 2 - Infrastructure

RECOMMENDED MOTION: Move to approve Task Authorization No 1 under the Master Contract for Professional Engineering Services with Zev Cohen and Associates for Design and Bidding Assistance Services for the City Center Improvements project for an amount not to exceed $188,485.00; authorizing Mayor and City Clerk to execute all necessary documents.

SUMMARY: This project consists of evaluation and design of the sidewalks, landscape and irrigation design, lake shore stabilization design, and parkage design around City Hall and the lower parking areas. The design will include minor drainage modifications along the sidewalk corridors as needed to facilitate the sidewalk improvements. This includes two or three locations where curbing, piping, and stormwater inlet will be added for erosion control. This task authorization includes design, permitting, environmental review, surveying and bidding assistance for the project.

PRESENTER: Lynn Stevens

ATTACHMENTS:

1.	22122c01 TA Revised 7.29.22	22122c01 TA Revised 7.29.22.pdf
2.	Dept Justification Memo - Zev Cohen TA1 - City Center Improvements	Dept Justification Memo - Zev Cohen TA1 - City Center Improvements.docx

Kelly Klausky	Created/Initiated - 8/23/2022
Julia Wiggins	Approved - 8/24/2022
Richard Colby	Approved - 8/24/2022
Junos Reed	Approved - 8/31/2022
Ronny Buttrum	Approved - 9/1/2022
Steve Parnell	Approved - 9/1/2022
Lynn Stevens	Approved - 9/1/2022

John McKinney	Approved - 9/7/2022
Matthew Jones	Approved - 9/9/2022
Wayne Clark	Approved - 9/9/2022
Robin Fenwick	Final Approval - 9/9/2022

TASK AUTHORIZATION NO. 1
Master Contract for Services dated January 18, 2022
Between the City of Port Orange, Florida and Zev Cohen & Associates, Inc.

THIS Task Authorization is entered into by and between the **CITY OF PORT ORANGE, FLORIDA**, a chartered municipal corporation with its principal place of business at 1000 City Center Circle, Port Orange, Florida 32129 (the "City") and **ZEV COHEN & ASSOCIATES, INC.**, a Florida corporation with its principal place of business at 300 Interchange Boulevard, Suite C, Ormond Beach, Florida 32714 ("Contractor"), and hereinafter collectively referred to as the "Parties," and is to that certain Master Contract for Engineering Services dated January 18, 2022, and any amendments thereto, hereinafter collectively referred to as the "Contract." The Parties, in exchange for the mutual covenants contained herein and in the Contract, agree as follows:

1. This Task Authorization expressly modifies the Contract and in the event of a conflict, the terms and conditions of this Task Authorization shall prevail.
2. In addition to all other terms and conditions contained in the Contract, Contractor shall provide services relating to City Center improvements as more particularly described in the Scope of Services attached hereto and incorporated herein as Task Authorization Exhibit "A."
3. Contractor shall complete the services to be provided herein within 365 days of the date of written notice by the City to the Contractor.
4. In return for the services identified above, the City agrees to compensate Contractor at the prices set forth in Exhibit "A" attached hereto and made a part hereof for all purposes, subject to a limit up to but not to exceed $188,485.00. All payments shall be governed by the Local Government Prompt Payment Act as set forth in Sections 218.70 through 218.79, Florida Statutes, as amended.
5. This Task Authorization may be executed in one or more counterparts, each of which shall be deemed to be an original but all of which together shall constitute one and the same instrument. The delivery by facsimile or e-mail of an executed copy of this Task Authorization shall be deemed valid as if an original signature was delivered. No contract shall be formed between the Contractor and the City until the City signs this Task Authorization.

[Remainder of this page intentionally left blank]

IN WITNESS WHEREOF, the Parties have made and executed this Task Authorization for the purposes herein expressed on the dates set forth below.

Witnesses:

ZEV COHEN & ASSOCIATES, INC.

_____

Printed Name:_____

By:_____

M. Dwight Durant, Director

If this Contract is signed by an individual not identified as the President of the corporation in the records of the Florida Department of State, Division of Corporations, please provide written authorization for that individual to enter into contracts on behalf of the corporation.

_____

Printed Name:_____

Date:_____

Witnesses:

CITY OF PORT ORANGE

_____ By:_____

Printed Name:_____ Donald O. Burnette, Mayor

_____ Date:_____

Printed Name:_____

Witnesses:

ATTEST:

_____ By:_____

Printed Name:_____ Robin L. Fenwick, CMC, City Clerk

_____ Date:_____

Printed Name:_____

[CA 5673]

Exhibit "A"

Zev Cohen & Associates, Inc.

Dated June 9, 2022

Consisting of 3 Page(s)

Scope of Work Based on discussions with Staff, the City desires to address several maintenance/renovation issues within the City Center complex which are typical of municipal complexes of this age while upholding the aesthetic and operational standards expected of the City's primary government office complex. The scope consists of several general goals and objectives:

- Review the existing sidewalk conditions along City Center Parkway and design replacement sidewalks where the existing conditions may not meet ADA compliance. We anticipate "spot treating" the corridor by isolating the improvements to specific areas as needed.
- Review the existing sidewalk conditions along City Center Boulevard and design replacement sidewalks where the existing conditions may not meet ADA compliance. We anticipate "spot treating" the corridor by isolating the improvements to specific areas as needed.
- Review the existing sidewalk conditions around City Center Circle and design replacement sidewalks where the existing conditions may not meet ADA compliance. We anticipate a majority, if not all, of the sidewalks will be redesigned and reconstructed. We do not anticipate addressing areas generally north of City Hall in the plaza bound by the large retaining wall.
- Minor drainage modifications along the sidewalk corridors as needed to facilitate the sidewalk improvements and long-term maintenance of the facility. This includes two or three locations of curbing, piping, and inlet additions.
- Provide for retaining walls or other systems to address two areas of erosion (one on the west and one on the east side of the pond). We anticipate requiring installation of the systems per manufacturer's recommendation and/or requiring any structural analysis to be provided by the contractor with the shop drawing review process.
- Pedestrian crossings along the corridors will be evaluated and improved, as needed.
- Resurfacing of the two "lower" parking lots to include the reconstruction of curbing and sidewalk ramps, as required.
- Asphalt removal/replacement in a few areas to address root damage.
- Review/improve ADA corridor access and compliance from the lower parking lots.
- New/modified landscape to better serve the facility (three (3) corridors and lower parking lots) considering the mature canopy growth, heavy pedestrian traffic, and high City aesthetic standards.
- New irrigation design (subconsultant service) to serve the improved landscaping.
- Exhibits and image boards to facilitate material selections and design direction for the landscape improvements.
- Surveying services for the project limits are included and provided by a subconsultant.

Task 1.0 Preliminary Design

A. ZCA will contract with a survey subconsultant to prepare topographic survey of the project limits.
B. Upon completion of the survey, ZCA will walk the project limits with City Staff and discuss/confirm specific areas of concern with the sidewalks, grading, and landscaping.
C. ZCA shall develop a preliminary Concept Plan addressing the sidewalk and grading issues along with landscape image boards for selection of types/sizes of materials.

Task 2.0 Final Design

A. ZCA shall prepare 60%, 90%, and 100% design plans and specifications of the civil and landscape components for the City's review.
B. The irrigation design will be submitted with the 90% and 100% plans.
C. A cost estimate will also be prepared at the 90% and 100% submittals.

Task 3.0 Permitting

A. ZCA shall coordinate with the SJRWMD in order to determine what, if any, permitting will be required. We anticipate and have included a Letter Modification for the proposed walls in the pond. The sidewalk replacement and parking lot resurfacing is not anticipated to require a permit.
B. No specific City permitting is anticipated as this project is generally considered a replacement/maintenance project; however, we understand the internal review of the Plans will likely include reviews by the Development Review Staff.

Task 4.0 Environmental Review

A. ZCA will prepare the necessary documents and environmental review records for the Categorically Excluded Project. ZCA will utilize the suggested forms by Florida's Department of Economic Opportunity to document compliance with 24 CFR 58.35(a) and/or 24 CFR Part 58.34(a) and 58.35(b). Should additional environmental reviews be necessary or should the project be found to not be Categorically Excluded, a separate scope will be prepared. A formal Environmental Assessment and/or an Environmental Impact Statement is not anticipated or included with this scope.

Task 5.0 Surveying Services

A. See attached scope of services from Atlantic Drafting and Surveying, Inc.

Task 6.0 Irrigation Design

A. See attached scope of services from Crawford Design.

Task 7.0 Bidding Services

A. Assist the City in preparing a bid package utilizing the 100% plans and specifications. We understand the City's Purchasing Department will lead the effort and ZCA shall provide support as needed.
B. Attend the pre-bid meeting coordinated and conducted by the City.
C. Assist the City in responding to Contractor's questions and preparing addenda as required.
D. Attend the bid opening and review the bid responses in order to make a recommendation to the City.

Task 8.0 - Construction Administration and CEI Services are not included but a separate proposal can be provided if needed.

Fee Schedule	Subconsultant	ZCA
Task 1 - Preliminary Design		$14,500.00
Task 2 – Final Design		$130,000.00
Task 3 – Permitting		$2,500.00
Task 4 – Environmental Review		$5,500.00
Task 5 – Surveying Services	$23,485.00	
Task 6 – Irrigation Design	$4,000.00	
Task 7 – Bidding Services		$8,500.00
Task 8 – Construction Administration (TBD)		

Total (Including Sub Consultant) $188,485.00

RJB/ns
22122c01 TA

City of Port Orange
Public Works and Utilities Department

TO: Wayne Clark, City Manager

THRU: Lynn Stevens, Public Works and Utilities Director
Julia Wiggins, Public Works and Utilities Business Manager

FROM: Junos Reed P.E., Engineering and Construction Manager

DATE: July 21, 2022

SUBJECT: Zev Cohen and Associates, Inc. – Task Authorization No. 1 under the Master Contract for Professional Engineering Services CA7763 for City Center Improvements Design and Bidding Assistance Services

REQUEST:
The Public Works & Utilities Department is requesting approval of Task Authorization No 1 under the Master Contract for Professional Engineering services with Zev Cohen for Design and Bidding Assistance Services for the City Center Improvements project in the amount not to exceed $188,485.00.

PURPOSE:
This project will address several maintenances, ADA access & renovation issues within and around the City Center Complex.

CONSIDERATION:
This project consists of evaluating the existing sidewalk conditions along City Center Parkway, City Center Blvd, City Center Circle, and around the lake at City Hall. All broken or non-ADA compliant sidewalk sections will be removed and replaced or re-routed as needed to establish ADA compliance. This project will also include new landscape and reclaimed water irrigation systems along City Center Pkwy, City Center Blvd, City Center Cir, and within the lower parking lots at City Hall. This project will also address areas around the lake that need attention. There are sections of the sidewalk that go around the lake at City Hall that are failing or in danger of failure due to the deterioration of the pond slope caused by erosion from stormwater runoff. These areas will be stabilized with a retaining wall or other stabilization systems and the sidewalk will be reconstructed. To prevent future erosion from the stormwater runoff, some curbing and storm inlets will be added to City Center Circle to capture the runoff and rout it through piping to the pond.

FUNDING:
Fund: 317
Name: General Capital Repl Fund
Cost Center: Public Works
Program: Roads and Signs
Spend Category: Roads Paving
Project Worktag: POL203 (Resurface Parking Lots – City Facilities)
FY22 Approved Budget: $125,000
Actual: $47,121.25

Fund: 412
Name: Stormwater Utility
Cost Center: Drainage Utility
Program: NA
Spend Category: Drainage - Capital
Project Worktag: DIP202 (City Center Shoreline Stabilization)
FY22 Approved Budget: $325,000
Actual: $47,121.25

Fund: 110
Fund Name: CDBG Grant
Cost Center: Drainage
Program: DIP202 (Center Circle Sidewalks portion)
Spend Category: Drainage - Capital
FY23 Approved Budget: $383,834
FY23 Actual: $47,121.25

Fund: 401
Name: Water & Sewer System
Cost Center: Water and Sewer
Program: Water/Sewer Distribution
Spend Category: Land Improvements – Sprinkler System
Project Worktag: WRP201 (City Center Complex Reclaimed Water Irrigation)
FY22 Approved Budget: $125,000
Actual: $47,121.25

RECOMMENTATION:
The Public Utilities Department recommends approval of Task Authorization No 1 under the Master Contract for Professional Engineering services with Zev Cohen for Design and Bidding Assistance Services for City Center Improvements project in the amount not to exceed $188,485.00.

ANTICIPATED SCHEDULE:

a) Council Approval Date: September 2022
b) The length of Task Authorization will be 700 days from the Notice to Proceed date

ATTACHMENTS:

1. Task Authorization No. 1 draft documents
2. Zev Cohen City Center Improvements Proposal – Revised

CITY COUNCIL AGENDA ITEM

COUNCIL MEETING DATE 9/20/2022

SUBJECT: (C8e) Approval of Task Authorization No. 2 with Zev Cohen & Associates, Inc. under the Master Contract for Professional Engineering Services (CA7763) for Jackson St. and Oak St. Stormwater Improvements Design and Bidding Assistance Services

DEPARTMENT: Public Utilities

GOAL: 2 - Infrastructure

RECOMMENDED MOTION: Move to approve Task Authorization No. 2 with Zev Cohen & Associates, Inc. under the Master Contract for Professional Engineering services for Design and Bidding Assistance Services for Jackson St & Oak St Stormwater Improvements project in the amount not to exceed $108,485.00; and authorize Mayor and City Clerk to execute all necessary documents.

SUMMARY: Jackson St. from Dunlawton to Canal View and Oak St. from Jackson to Dunlawton Ave. both have open ditch drainage systems directly adjacent to the roadway travel lanes to convey the stormwater off the street. These open ditches, especially on Jackson St. are very deep with steep side slopes, making the ditches difficult and sometimes dangerous for the city's stormwater maintenance crews to maintain. Currently, the ditches and driveway culverts are being maintained by hand. Many of the existing driveway culverts along Jackson St. have old sand cement bag headwalls which are very difficult to maintain. Additionally, the ditches next to the travel lane are not preferred and the lack of sidewalks along much of the area eliminates the ability for pedestrians to safely travel.

This project will eliminate the open ditches by installing drainage inlets to capture the runoff and a piping network to direct the flow. In the areas where the ditches are piped and there are no sidewalks, 5-foot-wide concrete sidewalks will be added for pedestrian safety. This project was approved by City Council as part of the FY22-27 Capital Improvement Program. It has also been approved for CDBG funding.

This request is for design and bidding services for the project. Zev Cohen & Associates has a current master services contract with the City for these services.

PRESENTER: Lynn Stevens

ATTACHMENTS:

1.	Zev Cohen & Associates Task Authorization No 2 - Jackson St and Oak St Improvements	Zev Cohen & Associates Task Authorization No 2 - Jackson St and Oak St Improvements.pdf
2.	Task Authorization and Proposal	22123c01 TA Revised 7.29.22.pdf
3.	Dept Justification Memo - Zev Cohen TA2- Jackson & Oak Storm Improvements	Dept Justification Memo - Zev Cohen TA2- Jackson & Oak Storm Improvements .pdf

Kelly Klausky	Created/Initiated - 8/24/2022
Julia Wiggins	Approved - 8/25/2022
Richard Colby	Approved - 8/25/2022
Junos Reed	Approved - 8/29/2022
Ronny Buttrum	Approved - 8/29/2022
Steve Parnell	Approved - 8/29/2022
Lynn Stevens	Approved - 8/29/2022
John McKinney	Approved - 8/31/2022
Matthew Jones	Approved - 9/9/2022
Wayne Clark	Approved - 9/9/2022
Robin Fenwick	Final Approval - 9/9/2022

TASK AUTHORIZATION NO. 2
Master Contract for Services dated January 18, 2022
Between the City of Port Orange, Florida and Zev Cohen & Associates, Inc.

THIS Task Authorization is entered into by and between the **CITY OF PORT ORANGE, FLORIDA**, a chartered municipal corporation with its principal place of business at 1000 City Center Circle, Port Orange, Florida 32129 (the "City") and **ZEV COHEN & ASSOCIATES, INC.**, a Florida corporation with its principal place of business at 300 Interchange Boulevard, Suite C, Ormond Beach, Florida 32714 ("Contractor"), and hereinafter collectively referred to as the "Parties," and is to that certain Master Contract for Engineering Services dated January 18, 2022, and any amendments thereto, hereinafter collectively referred to as the "Contract." The Parties, in exchange for the mutual covenants contained herein and in the Contract, agree as follows:

1. This Task Authorization expressly modifies the Contract and in the event of a conflict, the terms and conditions of this Task Authorization shall prevail.
2. In addition to all other terms and conditions contained in the Contract, Contractor shall provide services relating to Jackson Street and Oak Street improvements as more particularly described in the Scope of Services attached hereto and incorporated herein as Task Authorization Exhibit "A."
3. Contractor shall complete the services to be provided herein within 365 days of the date of written notice by the City to the Contractor.
4. In return for the services identified above, the City agrees to compensate Contractor at the prices set forth in Exhibit "A" attached hereto and made a part hereof for all purposes, subject to a limit not to exceed $108,485.00. All payments shall be governed by the Local Government Prompt Payment Act as set forth in Sections 218.70 through 218.79, Florida Statutes, as amended.
5. This Task Authorization may be executed in one or more counterparts, each of which shall be deemed to be an original but all of which together shall constitute one and the same instrument. The delivery by facsimile or e-mail of an executed copy of this Task Authorization shall be deemed valid as if an original signature was delivered. No contract shall be formed between the Contractor and the City until the City signs this Task Authorization.

IN WITNESS WHEREOF, the Parties have made and executed this Task Authorization for the purposes herein expressed on the dates set forth below.

Witnesses:

ZEV COHEN & ASSOCIATES, INC.

_____

Printed Name:_____

By:_____

M. Dwight Durant, Director

If this Contract is signed by an individual not identified as the President of the corporation in the records of the Florida Department of State, Division of Corporations, please provide written authorization for that individual to enter into contracts on behalf of the corporation.

_____

Printed Name:_____

Date:_____

Witnesses:

CITY OF PORT ORANGE

_____ By:_____

Printed Name:_____ Donald O. Burnette, Mayor

_____ Date:_____

Printed Name:_____

Witnesses:

ATTEST:

_____ By:_____

Printed Name:_____ Robin L. Fenwick, MMC, City Clerk

_____ Date:_____

Printed Name:_____

[CA 7764]

Exhibit “A”

Zev Cohen & Associates, Inc.

Dated June 9, 2022

Consisting of 2 Page(s)

Zev Cohen and Associates, Inc.

Scope of Work Based on discussions with Staff, the City desires to pipe the existing drainage ditches on the west side of Jackson Street (between Dunlawton Ave and Canal View Blvd) and the south side of Oak Street (between Jackson St and Dunlawton Ave). As part of the design and along the limits of the ditch piping, the milling/resurfacing of Jackson and Oak Streets will also be completed. New sidewalks will be added along the west side of Jackson Street from Oak Street to Canalview Boulevard and on the north side of Oak Street from Jackson Street to Dunlawton Avenue.

While the intent of the project is to not completely reconstruct the utility services or utility mains that may cross the existing ditches to be piped, there may be incidental utility reconstruction required and is, therefore, included. It is anticipated that some existing driveway crossings may be in good condition and at an elevation such that they may remain in place while others are old or at an elevation in which they can't remain. In addition, incidental items such as mailboxes, street signs, etc. may be impacted and designed to be removed and/or replaced. There are several large trees along the corridors so every effort will be made to save these existing trees; however, there may be impacts to existing vegetation that is unavoidable. The scope includes the removal of such vegetation and the replacement with sod throughout the project in the ROW. Formal landscaping is not anticipated or included. Irrigation is also not anticipated, but will be addressed with performance requirements should any irrigation systems extend beyond the private property and into the ROW.

Task 1.0 Preliminary Design

A. ZCA will contract with a survey subconsultant to prepare topographic survey of the project limits.
B. Upon completion of the survey, ZCA will walk the project limits with City Staff and discuss/confirm specific areas of concern with the sidewalks, grading, and drainage.

Task 2.0 Final Design

A. ZCA shall prepare 60%, 90%, and 100% design plans and specifications of the civil components for the City's review.
B. A cost estimate will also be prepared at the 90% and 100% submittals.

Task 3.0 Permitting

A. Due to the anticipated surface water designation of portions of the ditches, ZCA shall pursue both the ERP and Federal 404 permitting through the Florida Dept of Environmental Permitting for utility corridors. We assume no stormwater treatment or management systems beyond the ditch piping will be required.

B. No specific City permitting is anticipated as this project is generally considered a replacement/maintenance project; however, we understand the internal review of the Plans will likely include reviews by the Development Review Staff. If any historic trees are impacted, we will work with City Staff in support of an application/approval by the City Council for its removal.

Task 4.0 Surveying Services

A. See attached scope of services from Atlantic Drafting and Surveying, Inc.

Task 5.0 Bidding Services

A. Assist the City in preparing a bid package utilizing the 100% plans and specifications. We understand the City's Purchasing Department will lead the effort and ZCA shall provide support as needed.
B. Attend the pre-bid meeting coordinated and conducted by the City.
C. Assist the City in responding to Contractor's questions and preparing addenda as required.
D. Attend the bid opening and review the bid responses in order to make a recommendation to the City.

~~**Task 6.0** -- Construction Administration and CEI Services are not included but a separate proposal can be provided if needed.~~

Fee Schedule	Subconsultant	ZCA
Task 1 - Preliminary Design		$5,000.00
Task 2 – Final Design		$70,000.00
Task 3 – Permitting		$15,000.00
Task 4 – Surveying Services	$10,985.00	
Task 5 – Bidding Services		$7,500.00

~~Task 6 -- Construction Administration (TBD) --~~

Total (Including Sub Consultant) $108,485.00

RJB/ns
22123c01 TA

TASK AUTHORIZATION NO. 2
Master Contract for Services dated January 18, 2022
Between the City of Port Orange, Florida and Zev Cohen & Associates, Inc.

THIS Task Authorization is entered into by and between the **CITY OF PORT ORANGE, FLORIDA**, a chartered municipal corporation with its principal place of business at 1000 City Center Circle, Port Orange, Florida 32129 (the "City") and **ZEV COHEN & ASSOCIATES, INC.**, a Florida corporation with its principal place of business at 300 Interchange Boulevard, Suite C, Ormond Beach, Florida 32714 ("Contractor"), and hereinafter collectively referred to as the "Parties," and is to that certain Master Contract for Engineering Services dated January 18, 2022, and any amendments thereto, hereinafter collectively referred to as the "Contract." The Parties, in exchange for the mutual covenants contained herein and in the Contract, agree as follows:

1. This Task Authorization expressly modifies the Contract and in the event of a conflict, the terms and conditions of this Task Authorization shall prevail.
2. In addition to all other terms and conditions contained in the Contract, Contractor shall provide services relating to Jackson and Oak S improvements as more particularly described in the Scope of Services attached hereto and incorporated herein as Task Authorization Exhibit "A."
3. Contractor shall complete the services to be provided herein within 365 days of the date of written notice by the City to the Contractor.
4. In return for the services identified above, the City agrees to compensate Contractor at the prices set forth in Exhibit "A" attached hereto and made a part hereof for all purposes, subject to a limit up to but not to exceed $108,485.00. All payments shall be governed by the Local Government Prompt Payment Act as set forth in Sections 218.70 through 218.79, Florida Statutes, as amended.
5. This Task Authorization may be executed in one or more counterparts, each of which shall be deemed to be an original but all of which together shall constitute one and the same instrument. The delivery by facsimile or e-mail of an executed copy of this Task Authorization shall be deemed valid as if an original signature was delivered. No contract shall be formed between the Contractor and the City until the City signs this Task Authorization.

[Remainder of this page intentionally left blank]

IN WITNESS WHEREOF, the Parties have made and executed this Task Authorization for the purposes herein expressed on the dates set forth below.

Witnesses:

ZEV COHEN & ASSOCIATES, INC.

_____

Printed Name:_____

By:_____

M. Dwight Durant, Director

If this Contract is signed by an individual not identified as the President of the corporation in the records of the Florida Department of State, Division of Corporations, please provide written authorization for that individual to enter into contracts on behalf of the corporation.

_____

Printed Name:_____

Date:_____

Witnesses:

CITY OF PORT ORANGE

_____ By:_____

Printed Name:_____ Donald O. Burnette, Mayor

_____ Date:_____

Printed Name:_____

Witnesses:

ATTEST:

_____ By:_____

Printed Name:_____ Robin L. Fenwick, CMC, City Clerk

_____ Date:_____

Printed Name:_____

[CA 5673]

Exhibit "A"

Zev Cohen & Associates, Inc.

Dated June 9, 2022

Consisting of 2 Page(s)

Scope of Work Based on discussions with Staff, the City desires to pipe the existing drainage ditches on the west side of Jackson Street (between Dunlawton Ave and Canal View Blvd) and the south side of Oak Street (between Jackson St and Dunlawton Ave). As part of the design and along the limits of the ditch piping, the milling/resurfacing of Jackson and Oak Streets will also be completed. New sidewalks will be added along the west side of Jackson Street from Oak Street to Canalview Boulevard and on the north side of Oak Street from Jackson Street to Dunlawton Avenue.

While the intent of the project is to not completely reconstruct the utility services or utility mains that may cross the existing ditches to be piped, there may be incidental utility reconstruction required and is, therefore, included. It is anticipated that some existing driveway crossings may be in good condition and at an elevation such that they may remain in place while others are old or at an elevation in which they can't remain. In addition, incidental items such as mailboxes, street signs, etc. may be impacted and designed to be removed and/or replaced. There are several large trees along the corridors so every effort will be made to save these existing trees; however, there may be impacts to existing vegetation that is unavoidable. The scope includes the removal of such vegetation and the replacement with sod throughout the project in the ROW. Formal landscaping is not anticipated or included. Irrigation is also not anticipated, but will be addressed with performance requirements should any irrigation systems extend beyond the private property and into the ROW.

Task 1.0 Preliminary Design

A. ZCA will contract with a survey subconsultant to prepare topographic survey of the project limits.
B. Upon completion of the survey, ZCA will walk the project limits with City Staff and discuss/confirm specific areas of concern with the sidewalks, grading, and drainage.

Task 2.0 Final Design

A. ZCA shall prepare 60%, 90%, and 100% design plans and specifications of the civil components for the City's review.
B. A cost estimate will also be prepared at the 90% and 100% submittals.

Task 3.0 Permitting

A. Due to the anticipated surface water designation of portions of the ditches, ZCA shall pursue both the ERP and Federal 404 permitting through the Florida Dept of Environmental Permitting for utility corridors. We assume no stormwater treatment or management systems beyond the ditch piping will be required.

B. No specific City permitting is anticipated as this project is generally considered a replacement/maintenance project; however, we understand the internal review of the Plans will likely include reviews by the Development Review Staff. If any historic trees are impacted, we will work with City Staff in support of an application/approval by the City Council for its removal.

Task 4.0 Surveying Services

A. See attached scope of services from Atlantic Drafting and Surveying, Inc.

Task 5.0 Bidding Services

A. Assist the City in preparing a bid package utilizing the 100% plans and specifications. We understand the City's Purchasing Department will lead the effort and ZCA shall provide support as needed.
B. Attend the pre-bid meeting coordinated and conducted by the City.
C. Assist the City in responding to Contractor's questions and preparing addenda as required.
D. Attend the bid opening and review the bid responses in order to make a recommendation to the City.

Task 6.0 - Construction Administration and CEI Services are not included but a separate proposal can be provided if needed.

Fee Schedule	Subconsultant	ZCA
Task 1 - Preliminary Design		$5,000.00
Task 2 – Final Design		$70,000.00
Task 3 – Permitting		$15,000.00
Task 4 – Surveying Services	$10,985.00	
Task 5 – Bidding Services		$7,500.00
Task 6 – Construction Administration (TBD)		

Total (Including Sub Consultant) $108,485.00

RJB/ns
22123c01 TA

City of Port Orange
Public Works and Utilities Department

TO: Wayne Clark, City Manager

THRU: Lynn Stevens, Public Works, and Utilities Director
Julia Wiggins, Public Works, and Utilities Business Manager

FROM: Junos Reed P.E., Engineering and Construction Manager

DATE: August 10, 2022

SUBJECT: Zev Cohen and Associates, Inc. – Task Authorization No. 2 under the Master Contract for Professional Engineering Services CA7763 for Jackson St & Oak St Stormwater Improvements Design and Bidding Assistance Services

REQUEST:
The Public Works & Utilities Department is requesting approval of Task Authorization No 2 under the Master Contract for Professional Engineering services with Zev Cohen for Design and Bidding Assistance Services for the Jackson St & Oak St Stormwater Improvements project in the amount not to exceed $108,485.00

PURPOSE:
The purpose of this project is to improve the stormwater conveyance, traffic safety, and pedestrian sidewalk connectivity along Jackson St from Dunlawton Ave. to Canal View Blvd. and along Oak St. From Jackson St. to Dunlawton.

CONSIDERATION:
Jackson St. from Dunlawton to Canal View and Oak St. from Jackson to Dunlawton Ave. both have open ditch drainage systems directly adjacent to the roadway travel lanes to convey the stormwater off the street. These open ditches, especially on Jackson St. are very deep with steep side slopes, making the ditches difficult and sometimes dangerous for the city's stormwater maintenance crews to maintain. Currently, the ditches and driveway culverts are being maintained by hand. Many of the existing driveway culverts along Jackson St. have old sand cement bag headwalls which are very difficult to maintain. Additionally, the ditches next to the travel lane is not preferred and the lack of sidewalks along much of the area eliminates the ability for pedestrians to safely travel.

This project will eliminate the open ditches by installing drainage inlets to capture the runoff and a piping network to direct the flow. In the areas where the ditches are piped and there are no sidewalks, 5-foot-wide concrete sidewalks will be added.

This project was approved in FY22 as part of the Capital Improvement Program by City Council.

FUNDING:
Fund: 412
Name: Stormwater Utility
Cost Center: Drainage Utility
Program: NA
Spend Category: Drainage - Capital
Project Worktag: DIP024 (Jackson St & Oak St. Drainage Improvements)
FY22 Approved Budget: $450,000
Actual: $78,485

Fund: 401
Name: Water & Sewer System
Cost Center: Water and Sewer
Program: Water/Sewer Distribution
Spend Category: Water - Capital
Project Worktag: URP001 (Water Main Replacement Prior to Public Works Improvement)
FY22 Approved Budget: $30,000
Actual: $30,000

RECOMMENTATION:
The Public Utilities Department recommends approval of Task Authorization No 2 under the Master Contract for Professional Engineering services with Zev Cohen for Design and Bidding Assistance Services for Jackson St & Oak St Stormwater Improvements project in the amount not to exceed $108,485.00

ANTICIPATED SCHEDULE:
a) Council Approval Date: September 2022
b) The length of Task Authorization will be two years from the Notice to Proceed date

ATTACHMENTS:
1. Task Authorization No. 2 draft documents
2. Zev Cohen Jackson St & Oak St Stormwater Improvements Proposal

CITY COUNCIL AGENDA ITEM

COUNCIL MEETING DATE 9/20/2022

SUBJECT: (C8f) Approval of Amendment No. 2 & Renewal No. 1 with VerdeGo LLC (CA6897) for - Major Thoroughfare Landscaping Maintenance (ITB 19-18)

DEPARTMENT: Public Works

GOAL: 3 - Quality of Life

RECOMMENDED MOTION: Move to approve Amendment No. 2 & Renewal No. 1 to the Standard Contract for Services (CA6897) with VerdeGo, LLC, and authorize the Mayor and City Clerk to execute all necessary documents.

SUMMARY: On September 27, 2019, the City entered into a Standard Contract for Services with VerdeGo LLC pursuant to ITB #19-18 Major Thoroughfare Landscaping Maintenance. The initial term of the contract was September 27, 2019, to September 26, 2022, with the option to renew up to two, one-year terms upon agreement of the parties and approval by the City Manager. There are no provisions in the contract for CPI adjustments.

Both parties have agreed to renew the current contract. However, the vendor has requested an increase due to the significant cost increases in labor (15%+) and fuel (50%+), they are requesting an overall increase to the annual contract amount of 10% in order to continue the level of service that the City expects. The overall 10% increase is $22,515.41, for a revised and amended annual amount not to exceed $247,669.47.

The Public Works & Utilities Department believes this is a fair request and recommends continuing the contact. The new pricing will go into effect on September 27, 2022. The renewal term is September 27, 2022 and continues to September 26, 2023. The contract will have one (1) one-year renewal option remaining. Staff intends to put this out for bid prior to the next renewal and add the newly landscaped medians on Dunlawton into one, single bid.

PRESENTER: Lynn Stevens

ATTACHMENTS:

1.	VerdeGo LLC Amendment No 2 and Renewal No 1 to Standard Contract for Services Dated September 27 2019	VerdeGo LLC Amendment No 2 and Renewal No 1 to Standard Contract for Services Dated September 27 2019 .pdf

2.	Dept Justification Memo - VerdeGo Major Throughfares Amend 2 and Renewal 1	Dept Justification Memo - VerdeGo Major Throughfares Amend 2 and Renewal 1.pdf
3.	VerdeGo Price Increase Request	VerdeGo Price Increase Request.pdf
4.	VERDEGO LLC - CA6897 Contract and Bond - Maj Thoroughfares	VERDEGO LLC - CA6897 Contract and Bond - Maj Thoroughfares.pdf
5.	COI - VerdeGo	COI - VerdeGo .pdf
6.	Amendment 1 Verdego Contract CA6897	Amendment 1 Verdego Contract CA6897.pdf

Kelly Klausky	Created/Initiated - 8/25/2022
Julia Wiggins	Approved - 8/25/2022
Tom DiEulio	Approved - 8/25/2022
Ronny Buttrum	Approved - 8/25/2022
Richard Colby	Approved - 8/25/2022
Lynn Stevens	Approved - 9/1/2022
John McKinney	Approved - 9/7/2022
Matthew Jones	Approved - 9/9/2022
Wayne Clark	Approved - 9/9/2022
Robin Fenwick	Final Approval - 9/9/2022

AMENDMENT NO. 2 AND RENEWAL NO. 1

TO STANDARD CONTRACT FOR SERVICES DATED SEPTEMBER 27, 2019

THIS AMENDMENT NO. 2 AND RENEWAL NO. 1 OF STANDARD CONTRACT FOR SERVICES ("Amendment and Renewal") is made and entered into the day and year set forth hereinafter by and between the **CITY OF PORT ORANGE, FLORIDA**, a Florida municipal corporation located at 1000 City Center Circle, Port Orange, Volusia County, Florida 32129-4144 (the "City"), and **VERDEGO, LLC** ("Contractor"), a Florida limited liability corporation whose principal address is 3335 North State Street, Bunnell, Florida 32110. The City and Contractor are collectively referred to herein as the "Parties."

WHEREAS, on the 27th day of September 2019, City and Contractor entered into Contract for Major Thoroughfare Landscape Maintenance, pursuant to Invitation to BID No. 19-18 (the "Contract"), and provides for an initial three (3) year term with the option to renew for up to two (2) one-year periods, upon mutual written agreement of the parties, subject to review and approval of the City Manager; and

WHEREAS, on the 9th day of March 2021, the Parties amended the Contract to remove the portion of landscape maintenance services for Dunlawton Avenue medians, from Spruce Creek Road, West, to I-95, as this portion of Dunlawton Avenue shall be maintained under ITB 19-15 SR421 Medians Maintenance Agreement dated February 10, 2021; and

WHEREAS, the Parties desire to utilize the first renewal option of the Contract for a period notwithstanding the date of execution, for a period effective September 27, 2022 and continuing until September 26, 2023; and

WHEREAS, the Parties desire to amend the Contract to increase the overall Contract price by ten percent (10%), an amount of $22,515.41, which shall not exceed an annual amount of $247,669.47, due to an increase in industry prices; and

WHEREAS, the Port Orange Mayor has determined that the execution of this Amendment and Renewal is beneficial to the citizens of the City of Port Orange.

NOW, THEREFORE, the Parties, for good and valuable consideration, the receipt and sufficiency of which are hereby acknowledged, agree as follows:

1. The foregoing recitals are true and correct and incorporated herein.

2. *Term.* The Term of this Contract as amended is hereby renewed. Notwithstanding the date of execution, the Contract shall renew effective September 27, 2022 and continuing until September 26, 2023.

3. *Amount of Contract Obligations*. Notwithstanding the date of execution, effective September 27, 2022, the Contract amount is hereby amended to reflect an increase of the overall Contract price by ten percent (10%), an amount of $22,515.41, which shall not exceed an annual amount of $247,669.47.

4. *Counterparts*. This Amendment and Renewal may be executed in one or more counterparts, each of which shall be deemed to be an original but all of which together shall constitute one and the same instrument. The delivery by facsimile or e-mail of an executed copy of this Amendment and Renewal shall be deemed valid as if an original signature was delivered. No contract shall be formed between Contractor and the City until the City signs this Amendment.

5. All other terms and conditions of the Contract shall remain in full force and effect.

IN WITNESS WHEREOF, the Parties hereto have signed, sealed, and delivered this Amendment on the day and year stated hereinafter.

Witnesses:

VERDEGO, LLC

By:_____
Terry McNitt, Jr., A Member

If this Contract is signed by an individual not identified as the Managing Member of the company in the records of the Florida Department of State, Division of Corporations, please provide written authorization for that individual to enter into contracts on behalf of the company.

_____
Printed Name:_____

_____
Printed Name:_____

Date:_____

STATE OF FLORIDA
COUNTY OF FLAGLER

The foregoing instrument was acknowledged before me by means of _____physical presence or _____online notarization, this _____day of _____, 2022, by Terry McNitt, Jr., as A Member of VerdeGo, LLC, a Florida limited liability corporation. He is _____ personally known or _____ produced _____as identification.

_____
Notary Public, State of Florida
Printed, typed or stamped name, commission and expiration:

Witnesses:

CITY OF PORT ORANGE

_____
Printed Name:_____

By:_____
Donald O. Burnette, Mayor

_____
Printed Name:_____

Date:_____

STATE OF FLORIDA
COUNTY OF VOLUSIA

The foregoing instrument was acknowledged before me by means of ____ physical presence or _online notarization, this _day of _____, 2022, by Donald O. Burnette, as Mayor of the City of Port Orange, a Florida municipal corporation, on behalf of the city. He is ___ personally known or produced _____as identification.

_____
Notary Public, State of Florida
Printed, typed or stamped name, commission and expiration:

Witnesses:

ATTEST:

_____
Printed Name:_____

By:_____
Robin L. Fenwick, MMC, City Clerk

_____
Printed Name:_____

Date:_____

STATE OF FLORIDA
COUNTY OF VOLUSIA

The foregoing instrument was acknowledged before me, by means of ___physical presence or online notarization, this __day of _____, 2022, by Robin L. Fenwick, as City Clerk of the City of Port Orange, a Florida municipal corporation, on behalf of the city. She is ___personally known or produced _____as identification.

_____
Notary Public, State of Florida
Printed, typed or stamped name, commission and expiration:

City of Port Orange
Public Works & Utilities Department

TO: Wayne Clark, City Manager

THRU: Lynn Stevens, Director, Public Works & Utilities
Julia Wiggins, Business Manager, Public Works & Utilities

FROM: Ronny Buttrum, Deputy Director, Public Works & Utilities

DATE: August 25, 2022

SUBJECT: Amendment No 2 & Renewal No 1 – VerdeGo LLC, CA6897, ITB 19-18 Major Thoroughfare Landscaping Maintenance

REQUEST:
The Public Works & Utilities Department requests City Council approve Amendment No 2 & Renewal No 1 to the Standard Contract for Services (CA6897) with VerdeGo LLC, for Landscape Maintenance of Major Thoroughfares (ITB 19-18).

PURPOSE:
The purpose of this request is to amend current pricing and approve the first renewal under the Standard Contract for Services CA6897.

CONSIDERATION:
On September 27, 2019, the City entered into a Standard Contract for Services with VerdeGo LLC pursuant to ITB #19-18 Major Thoroughfare Landscaping Maintenance. The initial term of the contract was September 27, 2019, to September 26, 2022, with the option to renew up to two, one-year terms upon agreement of the parties and approval by the City Manager. There are no provisions in the contract for CPI adjustments in the contract.

Both parties have agreed to renew the current contract. However, the vendor has requested an increase due to the significant cost increases in labor (15%+) and fuel (50%+), they are requesting an overall increase to the annual contract amount of 10% in order to continue the level of service that the City expects. The overall 10% increase is $22,515.41, for a revised and amended amount not to exceed $247,669.47.

The Public Works & Utilities Department believes this is a fair request and recommends continuing the contact. The new pricing will go into effect on September 27, 2022. The renewal term is September 27, 2022 and continues to September 26, 2023. The contract

will have one (1) one-year renewal option remaining. Staff intends to put this out for bid prior to the next renewal and incorporated the newly landscaped median on Dunlawton back into the bid.

FUNDING:
Fund: 001
Fund Name: General Fund
Cost Center: Public Works
Program: Grounds Maintenance
Spend Category: Grounds maintenance services
FY23 Requested Budget: 991,300
Actual: $247,669.47

RECOMMENTATION:
The Public Works and Utilities Department recommends Council to approve Amendment No 2 & Renewal No 1 to the Standard Contract for Services (CA6897) with VerdeGo, LLC in the amount of $22,515.41 for a revised contract amount of $47,669.47.

ANTICIPATED SCHEDULE:
1.) Upload to Civiclerk: August 25, 2022
2.) Council to approve: September 20, 2022
3.) Fully executed agreement: Prior to September 27, 2022

ATTACHMENTS:
1.) Executed Contract CA6897 with VerdeGo, LLC.
2.) Executed Amendment No 1
3.) Vendors increase request
4.) COI for VerdeGo, LLC.

Klausky, Kelly

From: Klausky, Kelly
Sent: Thursday, August 25, 2022 7:48 AM
To: Wiggins, Julia
Subject: FW: [EXT] RE: Renewal Request - Standard Contract for Services CA6897 for ITB 19-18 Landscape Maintenance for the City's Major Thoroughfares

Here it is!

Kelly Klausky
Sr. Administrative Assistant
City of Port Orange | Public Works and Utilities
1395 Dunlawton Avenue
Port Orange, FL 32129
Phone: 386-506-5596
Fax : 386-756-5370
KKlausky@Port-Orange.org

www.Port-Orange.org

From: T.J. McNitt <TMcNitt@verdego.com>
Sent: Wednesday, August 17, 2022 3:51 PM
To: Wiggins, Julia <jwiggins@port-orange.org>
Cc: Klausky, Kelly <kklausky@port-orange.org>; Colby, Richard <rcolby@port-orange.org>; Cross, John <jcross@port-orange.org>
Subject: [EXT] RE: Renewal Request - Standard Contract for Services CA6897 for ITB 19-18 Landscape Maintenance for the City's Major Thoroughfares

Good afternoon,

We are excited to be provided the opportunity to continue our partnership with the City of Port Orange!

Due to the significant cost increases in labor (15%+) and fuel (50%+) over the last 6-8 months, we are requesting an overall increase to the annual contract amount of **10%** in order to continue the level of service that the City expects.

Please let me know if you have any questions or if there is anything from our end that is needed in order to incorporate our service rate changes.

Thank you,

T.J. MCNITT
President

VERDEGO LANDSCAPE

General Contractor- CGC 1506752

3335 North State Street, PO Box 789. Bunnell, FL 32110
PHONE: (386) 437-3122 | **MOBILE:** (386) 931-6018

From: Wiggins, Julia <jwiggins@port-orange.org>
Sent: Tuesday, August 16, 2022 10:51 AM
To: T.J. McNitt <TMcNitt@verdego.com>
Cc: Klausky, Kelly <kklausky@port-orange.org>; Colby, Richard <rcolby@port-orange.org>; Cross, John <jcross@port-orange.org>
Subject: Renewal Request - Standard Contract for Services CA6897 for ITB 19-18 Landscape Maintenance for the City's Major Thoroughfares

Mr. McNitt

Good morning.

The contract between the City of Port Orange and VerdeGo, LLC for ITB 19-18 Landscape Maintenance for the city's major thoroughfares expires on September 26, 2022.

The City would like to exercise the first renewal option for the term of September 27, 2022 through September 26, 2023.

If you are in agreement to renewal under the same terms and conditions that are outlined under the Standard Contract for Services CA6897 and Amendment No 1, please sign and return the attached renewal document to me as soon as possible. I have attached a copy of all the contract documents relating to this bid for your reference.

Should you have any questions, please feel free to contact me directly.

Thank you in advance for your assistance.

Julia Wiggins
City of Port Orange
Business Manager
Office: (386) 506-5751
Cell: (386) 416-9174
Fax: (386) 756-5370
Email: jwiggins@port-orange.org

CITY OF PORT ORANGE
STANDARD CONTRACT FOR SERVICES

This Standard Contract for Services ("Contract") is entered into this 27th day of September, 2019, by and between the **CITY OF PORT ORANGE**, a Florida municipal corporation, whose principal address is 1000 City Center Circle, Port Orange, Florida 32129 (the "City"), and **VERDEGO, LLC** ("Contractor"), a Florida limited liability corporation whose principal address is 3335 North State Street, Bunnell, Florida 32110. The City and Contractor are collectively referred to herein as the "Parties."

1. *Provision of Services*

(a) The Contractor hereby agrees to provide all machinery, equipment, tools, materials, labor, supervision, transportation, supplies, insurance, proper safety measures, and all incidentals necessary to provide and perform the Total Base Bid for Major Thoroughfare Landscape Maintenance, and as more specifically described in Invitation to Bid 19-18 ("ITB 19-18") and Addendum No. 1 which are made a part hereof by reference. Contractor's Bid Proposal and Scope of Services referenced in ITB 19-18 are attached hereto as Exhibit "1," and made a part hereof by reference. A complete copy of ITB 19-18 and Addendum No. 1 is available in the Office of the City Clerk.

(b) The time, manner and place for performance of such services shall be:

Initial Term: The initial term of this Contract shall become effective on the last date the Contract is signed by the Parties and shall continue for a period of Three (3) years (the "Term").

Renewals: Upon written agreement of the Parties, this Contract may be renewed for two (2) one-year periods, subject to review and approval of the City Manager.

Manner and Place: The work shall be performed in accordance with and in a manner as required by all current federal, state, county, fire, building and land development codes, laws, ordinances and regulations, and with applicable permits and licenses per the City Code of Ordinances.

Time and Essence: Contractor acknowledges that time is of the essence for this Contract.

Authorization for Services: This Contract standing alone does not authorize the purchase of any goods or services or require the City to place any orders for goods or service. Authorization for the purchase of goods or services from Contractor under this Contract shall be upon issuance of a written Purchase Order and written Notice to Proceed issued and executed by the City. The City reserves the right to contract with other parties for the goods and services contemplated by this Contract, as determined in the City's sole and absolute discretion.

2. *City Obligations*. In return for the services identified above, the City agrees to compensate the Contractor at the prices set forth in Exhibit "1." The City's obligation to pay Contractor under this Contract is limited to an amount not to exceed the budget appropriation for each fiscal year. All payments shall be governed by the Local Government Prompt Payment Act as set forth in Sections 218.70 through 218.79, Florida Statutes, as amended.

3. *Contract Documents*: The following forms are attached as Exhibit "2" and must be completed, signed, witnessed and notarized as indicated, and returned to the City prior to the commencement of any services by Contractor under this Contract:

a. Front Page for Bond (F.S. § 255.05)

b. Combination Payment and Performance Bond (F.S. §255.05)

4. *Liens*. Contractor acknowledges that Contractor shall not be entitled to lien the City or other public property.

5. *Contract Administration*. The Public Works and Utility Director, Lynn Stevens, shall perform contract administration of this Contract. The City may change the contract administration, from time to time and at any time, upon written notice to Contractor. For notice provisions, see the paragraph below entitled "Notice."

6. *Termination for Convenience of the City*

(a) The parties agree that the City may terminate this Contract, or any work or delivery required hereunder, from time to time either in whole or part, whenever the City Manager of Port Orange shall determine that such termination is in the best interest of the City.

(b) Termination, in whole or in part, shall be effected by delivery of a Notice of Termination signed by the City Manager or his designee, mailed or delivered to the Contractor, and specifically setting forth the effective date of termination.

(c) Upon receipt of such Notice, the Contractor shall:

(i) cease any further deliveries or work due under this Contract, on the date, and to the extent, which may be specified in the Notice;

(ii) place no further orders with any subcontractors except as may be necessary to perform that portion of this Contract not subject to the Notice;

(iii) terminate all subcontracts except those made with respect to contract performance not subject to the Notice;

(iv) settle all outstanding liabilities and claims which may arise out of such termination, with the ratification of the Finance Director of Port Orange; and

(v) use best efforts to mitigate any damages which may be sustained by the Contractor as a consequence of termination under this clause.

(d) After complying with the provisions of subparagraph (c), above, the Contractor shall submit a termination claim, in no event later than six (6) months after the effective date of termination, unless one or more extensions of three (3) months each are granted by the Finance Director.

(e) The Finance Director, with the approval of the City Manager, shall pay from the using department's budget, reasonable costs of termination, including a reasonable amount for profit on supplies or services delivered or work completed. In no event shall this amount be greater than the original contract price, reduced by any payments made prior to Notice of Termination, and further reduced by the price of the supplies not delivered or the services not provided. This Contract shall be amended accordingly, and the Contractor shall be paid the agreed amount.

(f) In the event that the parties cannot agree on the whole amount to be paid to the Contractor by reason of termination under this clause, the Finance Director shall pay the Contractor the amounts determined as follows, without duplicating any amounts which may have already been paid under the preceding paragraph of this clause:

(i) With respect to all Contract performance prior to the effective date of Notice of Termination, the total of:

(1) the cost of work performed or supplies delivered;

(2) the cost of settling and paying any reasonable claims as provided in paragraph (c) (iv), above;

(3) a sum as profit on (a) determined by the Finance Director to be fair and reasonable.

(ii) The total sum to be paid under (i) above shall not exceed the contract price, as further reduced by the contract price of work or supplies not terminated.

(g) In the event that the Contractor is not satisfied with any payments which the Finance Director shall determine to be due under this clause, the Contractor may appeal any claim to the City Council in accordance with Paragraph 21 of this contract concerning disputes.

7. *Termination for Convenience for Subcontractors*. In accordance with the termination for the convenience of the City provision of this contract, the Contractor shall include similar provisions in any subcontract, and shall specifically include a requirement that subcontractors make all reasonable efforts to mitigate damages which may be suffered. Failure to include such provisions shall bar the Contractor from any recovery from the City whatsoever of loss or damage sustained by a subcontractor as a consequence of termination for convenience.

8. *Termination for Default*. Either party may terminate this Contract, without further obligation, for the default of the other party or its agents or employees with respect to any agreement or provision contained herein.

9. *Examination of Records*

(a) The Contractor agrees that the City, or any duly authorized representative, shall, until the expiration of five (5) years after final payment hereunder, have access to and the right to examine and copy any pertinent books, documents, papers and records of the Contractor involving transactions related to this Contract.

(b) The Contractor further agrees to include in any subcontract for more than $10,000 entered into as a result of this Contract, a provision to the effect that the subcontractor agrees that the City or any duly authorized representative shall, until the expiration of five (5) years after final payment under the subcontract, have access to and the right to examine and copy any pertinent books, documents, papers and records of such contractor involved in transactions related to such subcontract, or this Contract. The term subcontract as used herein shall exclude purchase orders for public utility services at rates established for uniform applicability to the general public.

(c) The period of access provided in subparagraphs (a) and (b) above for records, books, documents and papers which may relate to any arbitration, litigation, or the settlement of claims arising out of the performance of this contract or any subcontract shall continue until any appeals, arbitration, litigation or claims shall have been finally disposed of.

10. *Public Records Compliance*. Contractor shall comply with public records laws as set forth in Chapter 119, Florida Statutes, and shall specifically:

(a) Keep and maintain public records that ordinarily and necessarily would be required by the City in order to perform the service.

(b) Provide the public with access to public records on the same terms and conditions that the City would provide the records and at a cost that does not exceed the cost provided in Section 119.0701, Florida Statutes, or as otherwise provided by law.

(c) Ensure that public records that are exempt or confidential and exempt from public records disclosure requirements are not disclosed except as authorized by law for the duration of the Contract term.

(d) Upon completion of the Contract, Contractor shall transfer to the City, at no cost, all public records in possession of the Contractor and destroy any duplicate public records that are exempt or confidential and exempt from public records disclosure requirements. All records stored electronically must be provided to the City in a format that is compatible with the information technology systems of the City.

If Contractor does not comply with a public records request, the City shall enforce the contract provisions in accordance with the contract.

CONTRACTOR QUESTIONS RELATING TO CONTRACTOR'S DUTIES TO PROVIDE PUBLIC RECORDS RELATING TO THIS CONTRACT MUST BE FORWARDED TO THE OFFICE OF THE CITY CLERK, CITY HALL, 1000 CITY CENTER CIRCLE, PORT ORANGE, FLORIDA 32129 TELEPHONE: (386) 506-5563 E-MAIL: CITYCLERK@PORT-ORANGE.ORG

11. *Termination for Non-Appropriation of Funds*

(a) If funds are not appropriated for any succeeding fiscal years subsequent to the one in which this contract is entered into, for the purpose of this Contract, then the City may terminate this Contract upon thirty (30) days prior written notice to the Contractor. Should termination be accomplished in accordance with this Section, the City shall be liable only for payments due through the date of termination.

(b) The City agrees that should it terminate in accordance with this Section, it shall not obtain services which are substantially equal to or similar to those for which this contract was entered into. This provision shall survive any termination of the Contract.

12. *Insurance*. Contractor shall maintain insurance during the life of this Contract. Contractor shall provide to the City a certificate of insurance identifying the City of Port Orange as an additional insured. For workers' compensation coverage, the bidder's insurance certificate shall include the insurer's waiver of subrogation in lieu of naming the city as an additional insured for workers' compensation.

Policies other than Workers' Compensation shall be issued by insurers licensed and/or duly authorized under Florida Law to do business in the State of Florida and all insuring companies are required to have a minimum rating of "A" in the "Best Key Rating Guide" published by A.M. Best & Company, Inc. Policies for Workers' Compensation may be issued by companies authorized as a group self-insurer by F.S. 440.572. Contractor shall not commence work under this Contract until the City has received a certificate or certificates of insurance and endorsement evidencing the required insurance. Contractor shall provide the City written notice of cancellation, nonrenewal or any other changes in coverage no later than ten (10) days prior to the effective date of the change.

The City reserves the right to increase insurance coverage as determined for higher risk contracts and shall reimburse the Contractor for the reasonable additional costs of increased coverage.

Standard Insurance Requirements			
	Insurance	**Standards**	**Additional Requirements**
☒	Workers' Compensation Additional Coverage:	Limits: Coverage A - Statutory Coverage B - $100,000 All States (Broad Form) Voluntary Compensation	☐If Contract requires work on or about navigable waters, Longshoreman's and Harbor Workers' Coverage required. ☐If vessels involved, Jones Act coverage with limits of $500,000 required.

☒	Comprehensive General Liability (including Completed Operations and Contractual Liability	Limits: Combined Single Limit Bodily Injury and Property damage $500,000 occurrence $1,000,000 Aggregate	☐When work is on or under Railroad rights of way or properties, the Contractor shall take out and maintain during the life of the Contract, Railroad protective liability and property damage insurance in amounts as requested by the Railroad.
☒	Comprehensive Business, Automobile Liability to include all automobiles. Additional Coverage:	Limits: Auto Liability Body Injury: $200,000 each person $300,000 each occurrence. Property Damage Liability $100,000 each occurrence. Non-Owned, Hired Car	Or $500,000 Combined Single Limit for Bodily Injury and Property Damage

Additional Insurance Requirements			
☐	Property Insurance Builders Risk. Additional Coverage:	Limits: Buildings - Completed value of Contract. "All Risk" coverage on latest ISO for or its equivalent. Permission granted to occupy. Owner named as insured AIMA	If Contract requires handling or installation of Owner's equipment, coverage should be furnished on "All Risk" form, including transit and Owner shall be named.
☐	Professional Liability	Limits: Coverage - $1,000,000 minimum.	
☐	Installation Floater (IT)	Limits: Coverage - $ To be determined.	
☐	Contractor Pollution Liability	Limits: Coverage - $ 1,000,000.00.	
☐	Errors and Omissions	Limits: Coverage - $1,000,000.00 minimum.	
☒	Payment and Performance Bond Required	Limits: Coverage - Equal to amount of Contract.	
☐	**Department Head waives Payment and Performance Bond for work under $25,000.00.**		
☐	**Unless otherwise required by law, Department Head waives Insurance for work described as follows: (check at least one)** **☐ under $25,000.00** **☐ including goods F.O.B. the place of destination**		

13. *Assignability of Contract*. Neither this contract, nor any part hereof, may be assigned by the Contractor to any other party without the express written approval of the City Council.

14. *Modifications or Changes to this Contract*

(a) Change Orders. The Department Head, with the concurrence of the City's signatory as required by the City's Purchasing Policy, shall without notice to any sureties, have the authority to order changes in this Contract which affect the cost or time of performance. Such changes shall be ordered in writing specifically designated to be a change order. Such orders shall be limited to reasonable changes in the services to be performed or the time of the performance. The City will not be held liable for any changes which have not been properly authorized and approved in accordance with this Contract.

(b) If any change under this clause causes an increase or decrease in Contractor's cost of, or time required for the performance of the work hereunder, Contractor shall receive an equitable adjustment in accordance with subparagraph (d), which shall include all compensation to the Contractor, or the City, of any kind in connection with such change, including all costs and damages related to or incidental to such change.

(c) Contractor need not perform any work described in any change order unless it has received a certification from the City that there are funds budgeted and appropriated sufficient to cover the cost of such changes.

(d) No claim for changes ordered hereunder shall be considered if made after final payment in accordance with the Contract.

15. *Sovereign Immunity*. The City expressly retains all rights, benefits and immunities of sovereign immunity in accordance with Section 768.28, Florida Statutes. Notwithstanding anything set forth in any section of this Contract to the contrary, nothing in this Contract shall be deemed as a waiver of immunity or limits of liability of the City beyond any statutory limited waiver of immunity or limits of liability which may have been adopted by the Florida Legislature or may be adopted by the Florida Legislature and the cap on the amount and liability of the City for damages regardless of the number or nature of claims in tort or equity shall not exceed the dollar amount set by the legislature for tort. Nothing in this Contract shall inure to the benefit of any third party for the purpose of allowing any claim against the City which would otherwise be barred under the Doctrine of Sovereign Immunity or operation of law.

16. *Warranties*. Contractor warrants that (1) the supplies to be provided to the City pursuant to this Contract are fit and sufficient for the purpose intended; (2) the supplies are merchantable, of good quality, and free from defects, whether patent or latent, in material or workmanship, and (3) the supplies sold to the City pursuant to this Contract conform to the standards required by this Contract.

Contractor further warrants that Contractor has title to the supplies provided, and that the supplies are free and clear of all liens encumbrances, and security interests. All warranties made in this Contract, together with service warranties and guarantees, shall run to the City and its successors and assigns.

17. *Additional Warranties*. Contractor further expressly warrants that materials and workmanship are warranted from defect for a one-year period. This is a minimum acceptable warranty.

18. *Additional Bond Security* If any surety bond furnished in connection with this Contract becomes unacceptable to the City, Contractor shall promptly furnish such additional security as may be required from time to time to protect the interests of the City and a person supplying labor and materials in the prosecution of work contemplated by this Contract. Contractor expressly acknowledges that if the work to be performed hereunder is a public work, a Payment and Performance Bond, in accordance with Florida Statutes Section 255.05, in a form acceptable to the City, shall be provided and recorded with the Clerk of Volusia County at Contractors expense.

19. *Inspection*

(a) All supplies (which term throughout this clause includes without limitation raw materials, components, intermediate assemblies, and their products) shall be subject to inspection and test by the City, to the extent practicable at all times and places including the place of manufacturer, and in any event prior to acceptance.

(b) In the event any supplies or lots of supplies are defective in material or workmanship, or otherwise not in conformity with the requirements of this Contract, the City shall have the right either to reject them (with or without instructions as to their disposition) or to require their correction. Supplies or lots of supplies which have been rejected or required to be corrected shall be removed or, if permitted or required by the Finance Director, corrected in place by and at the expense of Contractor promptly after notice, and shall not thereafter be tendered for acceptance unless the former rejection or requirement of correction is disclosed. If Contractor fails promptly to remove such supplies or lots of supplies which are required to be removed or promptly to replace or correct such supplies or lots of supplies, the City may either (i) by contract or otherwise replace or correct such supplies and charge Contractor the cost for such replacement or correction; or (ii) may terminate this Contract for default as provided in the clause of this Contract entitled "Termination for Default." Unless Contractor corrects or replaces such supplies within the delivery schedule, the Finance Director may require the delivery of such supplies at a reduction in price, which is equitable under the circumstances. Acceptance or rejection of the supplies shall be made as promptly as practicable after delivery, except as otherwise provided in this Contract. Failure to inspect and accept or reject supplies shall neither relieve Contractor from responsibility for such supplies as are not in accordance with the Contract requirements nor impose liability on the City therefor.

(c) The inspection and test by the City of any supplies or lots thereof does not relieve Contractor from any responsibility regarding defects or other failures to meet the Contract requirements, which may be discovered prior to acceptance. Except as otherwise provided in this Contract, acceptance shall be conclusive except as regards latent defects, fraud, or such gross mistakes as amount to fraud.

20. *Liability for Loss or Damage*. Contractor shall be liable for any loss of, or damage to, City property caused by the negligence, recklessness, or intended wrongful misconduct of Contractor, his/its agents, servants and employees and shall indemnify and save the City harmless against all actions, proceedings, claims, demands, costs, damages and expenses, including attorney's fees, by reason of any suit or action brought for any actual or alleged injury to or death of any person or damage to property other than City property, resulting from the performance of the Contract by Contractor, his/its agents, servants and employees. Contractor shall submit a full written report to the Finance Director within twenty-four (24) hours following the occurrence of such damage, loss or injury.

21. *Non-discrimination*. During the performance of this Contract, Contractor agrees as follows:

(a) Contractor will not discriminate against any employee or applicant for employment because of race, religion, color, sex, disability, marital status, age or national origin, except where such is a bona-fide occupational qualification reasonably necessary to the normal operation of Contractor. Contractor agrees to post in conspicuous places, available to employees and applicants for employment, notices setting forth the provisions of this non-discrimination clause. Contractor agrees and fully supports and complies with the Americans with Disabilities Act of 1990.

(b) Contractor shall state in all solicitations or advertisements for employees placed by or on behalf of Contractor that Contractor is an equal opportunity employer.

(c) Notices, advertisements and solicitations placed in accordance with federal law, rule or regulation shall be deemed sufficient compliance with this provision. Contractor shall include the provisions of the foregoing subparagraphs (a), (b), and (c) in every subcontract or purchase order of over $10,000 so that the provisions will be binding upon each subcontractor or vendor.

22. *E-Verify*. Contractor shall utilize the U.S. Department of Homeland Security's E-Verify system to verify the employment eligibility of all new employees hired by the Contractor during the term of this Contract and shall expressly require any subcontractor performing services pursuant to this Contract to likewise utilize the U.S. Department of Homeland Security's E-Verify system to verify the employment eligibility of all new employees hired by the subcontractor during the term of this Contract.

23. *Disputes*. The City Manager, who shall reduce his decision to writing and mail or otherwise furnish a copy thereof to Contractor, shall decide disputes with respect to this Contract. The decision by the City Manager shall be final and binding unless, within five (5) business days from the date of delivery of the decision of the City Manager, appeal is made to the City Council in writing and delivered to the City Clerk, Robin L. Fenwick, CMC. The decision of the City Council shall be final and binding unless set aside by a court of competent jurisdiction as fraudulent, capricious, arbitrary, or so grossly erroneous as necessary to imply bad faith, or not to be supported by any evidence.

24. *Force Majeure*. Neither party shall be liable for any delay in performance or failure to perform any obligation hereunder if, and to the extent that, such failure or delay is caused by an event of Force Majeure. Force Majeure shall mean any act, event or condition that is beyond the party's reasonable control, that materially and adversely affects the party's ability to perform its obligations hereunder, and that is not the result of the party's willful neglect, error, omission or failure to exercise reasonable due diligence.

25. *Controlling Law*. **THIS CONTRACT CONTAINS IMPORTANT MATTERS AFFECTING LEGAL RIGHTS AND IS ACCEPTED AND ENTERED INTO IN FLORIDA AND ANY QUESTION REGARDING ITS VALIDITY, CONSTRUCTION, ENFORCEMENT, OR PERFORMANCE SHALL BE GOVERNED BY FLORIDA LAW. ANY LEGAL PROCEEDING ARISING FROM OR IN ANY WAY REGARDING THE CONTRACT SHALL HAVE ITS VENUE LOCATED EXCLUSIVELY IN THE CIRCUIT COURT OF VOLUSIA COUNTY, FLORIDA, AND THE PARTIES HEREBY EXPRESSLY CONSENT AND SUBMIT THEMSELVES TO THE PERSONAL JURISDICTION AND VENUE OF THE COURT.**

26. *Additional Provisions*. This Contract includes all additional provisions as may have been outlined in written quotes and purchase orders and any attachments or exhibits to this Contract whether delivered herewith or subsequently approved as a part hereof, such as drawings or technical specifications prepared in the performance of this work.

27. *Integration*. This Contract and the documents incorporated herein by reference shall constitute the whole agreement between the parties. There are no promises, terms, conditions, or obligations other than those contained herein, and this Contract shall supersede all previous communications, representations, or agreements, written or verbal, between the parties hereto.

28. *Notice*. For purposes of this Contract, notices shall be sent as follows:

City: City of Port Orange
Attention: City Manager
1000 City Center Circle
Port Orange, Florida 32129
(386) 506-5501

Copy to: City of Port Orange
Attention: Lynn Stevens, Public Works and Utilities Director
1000 City Center Circle
Port Orange, Florida 32129
(386) 506-5575

Contractor: VerdeGo, LLC
Attention: Terry McNitt, Jr., Managing Member
P.O. Box 789
Bunnell, Florida 32110
(386) 931-6018 – Telephone
tmcnitt@verdego.com

3335 North State Street
Bunnell, Florida 32110

Any notice or other communication given under the Contract will be in writing and delivered by hand, sent by facsimile (provided acknowledgement of receipt thereof is delivered to the sender), sent by certified, registered mail, or sent by any nationally recognized overnight courier service to the addresses provided herein. The parties may, from time to time and at any time, change their respective addresses and each will have the right to specify as its address any other address by at least 10 days written notice to the other party.

29. *Contract Construction*

This Contract may be executed in one or more counterparts, each of which shall be deemed to be an original but all of which together shall constitute one and the same instrument. The delivery by facsimile or e-mail of an executed copy of this Contract shall be deemed valid as if an original signature was delivered. No contract shall be formed between Contractor and the City until the City signs this Contract.

30. *Authority to Sign*. Each person signing this Contract warrants that he or she is duly authorized to do so and to bind the respective party to the Contract.

[Remainder of this page intentionally left blank]

Witnesses:

Printed Name: Alan Hall

Printed Name: Jennifer Laura

VERDEGO, LLC

By: _____

Terry McNitt, Jr., Managing Member

If this Contract is signed by an individual not identified as the President of the corporation in the records of the Florida Department of State, Division of Corporations, please provide written authorization for that individual to enter into contracts on behalf of the corporation.

Date: 9/23/19

STATE OF FLORIDA
COUNTY OF FLAGLER

The foregoing instrument was acknowledged before me this 23 day of Sept, 2019, by Terry McNitt, Jr., as Managing Member of VerdeGo, LLC, a Florida limited liability corporation, and who:

[Notary: Please select one]

☒ is personally known to me; or

☐ has produced _____ as identification.

CODY WARREN
Commission # FF 961682
Expires February 17, 2020
Bonded Thru Troy Fain Insurance 800-385-7019

Cody Warren

Notary Public, State of Florida

Printed, typed or stamped name, commission and expiration:

Witnesses:

Printed Name: Odetta Canady

Printed Name: RUTH E. THAYNE

CITY OF PORT ORANGE

By: _____
Donald O. Burnette, Mayor

Date: 9/27/19

STATE OF FLORIDA
COUNTY OF VOLUSIA

The foregoing instrument was acknowledged before me this 27th day of September, 2019, by Donald O. Burnette, as Mayor of the City of Port Orange, a Florida municipal corporation, on behalf of the city, and who is personally known to me.

RUTH E. THAYNE
MY COMMISSION # FF924580
EXPIRES October 05, 2019
(407) 398-0153 FloridaNotaryService.com

Notary Public, State of Florida
Printed, typed or stamped name, commission and expiration:

RUTH E THAYNE

Witnesses:

Printed Name: Odetta Canady

Printed Name: RUTH E. THAYNE

ATTEST:

By: _____
Robin L. Fenwick, MMC, City Clerk

Date: 9/27/19

STATE OF FLORIDA
COUNTY OF VOLUSIA

The foregoing instrument was acknowledged before me this 27th day of September, 2019, by Robin L. Fenwick, as City Clerk of the City of Port Orange, a Florida municipal corporation, on behalf of the city, and who is personally known to me.

RUTH E. THAYNE
MY COMMISSION # FF924580
EXPIRES October 05, 2019
(407) 398-0153 FloridaNotaryService.com

Notary Public, State of Florida
Printed, typed or stamped name, commission and expiration:

RUTH E THAYNE

EXHIBIT "1"

Contractor's BlD Proposal and Scope of Services

Consisting of 7 Pages

"ATTACHMENT 1" SCHEDULE OF UNIT PRICING
BID FORM
CITY OF PORT ORANGE
ITB # 19-18
MAJOR THROUGHFARE LANDSCAPING MAINTENANCE
Completed Attachment 1 Bid Proposal form MUST be included with Bid
Instruction to save Attachment from DemandStar website:
Bidders are required to complete all fields shaded in green ONLY All other fields will be automatically calculated ←

NAME OF BUSINESS:	VerdeGo Landscape
CONTACT PERSON:	Billy Genovese
EMAIL ADDRESS:	[illegible]
AUTHORIZED NAME:	
AUTHORIZED	

RIGHTS OF WAY MAINTENANCE LEVELS
Maintenance - 52 Services
Mulch - 1x per Year

	ROAD NAME	SQUARE FOOTAGE	ACRES	MAINTENANCE COST PER Service	MAINTENANCE TOTAL ANNUAL COST	MULCH QUANTITIES Cubic yards	MULCH COST PER Application	TOTAL ANNUAL COST ALL APPLICATIONS
1	**Causeway and High Rise Bridge**	32,427	0.72	$335.02	$17,421.04	131	$5,895.00	$23,316.04
2	**Ridgewood Avenue Medians**	140,852	3.23	$467.60	$24,315.30	140	$6,300.00	$30,615.30
	North City Limits to Ocean Ave			$23.38			$350.00	
	Ocean Ave to Herbert St			$23.38			$350.00	
	Herbert St to Dunlawton Ave			$23.38			$350.00	
	Dunlawton Ave to Meeker Place			$23.38			$350.00	
	Meeker Place to Oak St			$23.38			$350.00	
	Oak St to Fox Place			$23.38			$350.00	
	Fox Place to White St			$23.38			$350.00	
	White St to Fleming Ave			$23.38				
	Fleming Ave to Norman St			$23.38			$350.00	
	Norman St to Rogers Place			$23.38			$350.00	
	Rogers Place to Howes St			$23.38			$350.00	
	Howes St to Clark Place			$23.38				
	Clark Place to Fitzgerald Place			$23.38			$350.00	
	Fitzgerald Place to Niver St			$23.38			$350.00	
	Niver St to Kiep Dr			$23.38			$350.00	
	Kiep Dr to 5584 S. Ridgewood			$23.38			$350.00	
	5584 S. Ridgewood to Farmbrook Rd			$23.38			$350.00	
	Farmbrook Rd to E. Bayshore Dr			$23.38			$350.00	
	E. Bayshore Dr to Nova Rd			$23.38			$350.00	
	Nova Rd to South City Limits (Rose Bay Bridge)			$23.38			$350.00	
3	**Ridgewood Avenue Roadsides**	78,910	1.81	$617.00	$37,684.00	N/A		$37,684.00
4	**Dunlawton Avenue Medians**	338,744	7.78	$741.00	$38,532.00	Included in HZI above		$38,532.00
	Summertrees Road to I-95			$57.00				
	I-95 to 1788 Dunlawton Ave			$57.00				
	1788 Dunlawton to Yorktowne Blvd			$57.00				
	Yorktowne Blvd to Clyde Morris Blvd			$57.00				
	Clyde Morris Blvd to Victoria Garden/City Center Pkw.			$57.00				
	Victoria Garden/City Center Pkw.to N. Swallow Tail/ Village Trail			$57.00				
	N. Swallow Tail/ Village Trail to S. Swallow Tail Dr			$57.00				
	S. Swallow Tail Dr to Jackson St.			$57.00				
	Jackson St. to Dunlawton Hills Subdivision			$57.00				
	Dunlawton Hills to Oak St			$57.00				
	Oak St to Spruce Creek Rd			$57.00				
	Spruce Creek Rd to RR Crossing			$57.00				
	RR Crossing to US 1			$57.00				
5	**Dunlawton Avenue Roadsides***	791,044	18.16	$1,410.00	$73,320.00	N/A		$73,320.00
6	**Nova Road Medians**	90,208	2.07	$371.79	$19,333.08	12	$540.00	$19,873.08
	Isabelle Ave to Regency Blvd			$41.31			$60.00	
	Regency Blvd to Wood St			$41.31			$60.00	
	Wood St to Durant Dr			$41.31			$60.00	
	Durant Dr to Spruce Creek Rd			$41.31			$60.00	
	Spruce Creek Rd to Miles Dr			$41.31			$60.00	
	Miles Dr to Tree Garden Dr			$41.31			$60.00	
	Tree Garden Dr to Village Trl			$41.31			$60.00	
	Village Trl to Dunlawton Ave			$41.31			$60.00	
	Dunlawton Ave to Eagle Lake Trl			$41.31			$60.00	
7	**Nova Road Roadsides***	404,895	9.26	$712.57	$37,053.64	N/A		$37,053.64
							Total Bid Cost	$254,794.06

SECTION 3 – SCOPE OF WORK, SPECIFICATIONS AND REQUIREMENTS

MAJOR THOROUGHFARE LANDSCAPE MAINTENANCE
SCOPE OF WORK AND REQUIREMENTS

STATEMENT OF RESPONSIBILITIES: The Contractor shall be responsible for providing machinery, equipment, tools, materials, labor, supervision, transportation, supplies, insurance, proper safety measures and all incidentals necessary to provide and perform grounds maintenance services along City Right of Ways; Causeway and Highrise Bridge, Dunlawton Avenue Medians and Roadsides, Ridgewood Avenues Medians and Roadsides, Nova Road Medians and Roadsides.

These areas are major thoroughfares and the gateway into the City. They are a top priority in the City and should be kept in prestige condition.

Please note, while the City has provided the square footage and acre measurements on each area covered under this contract, these measurements are APPROXIMATE only. Contractor awarded bid shall be responsible for all maintenance required in each respective area. The non-mandatory pre-bid meeting will include site visits to EACH area. It is highly recommended that each bidder attends the non-mandatory meeting. **Maps showing each area to be serviced are included in Exhibit B.**

Number *of Site Visits*: A total of fifty-two (52) maintenance visits shall be provided each calendar year. All locations shall be serviced weekly (52 visits). If mowing is not required, a minimum level of service shall be provided at each visit (see below).

- Areas 2 feet or more **outside** the sidewalk must be maintained unless maintained by property owner.

Minimum Level of Service Required for Each Site:

TRASH / DEBRIS CLEANUP: The Contractor shall be responsible for removing all litter and debris prior to mowing, **regardless of its source or the size,** from all turf grass areas, parking areas, sidewalks, mulch landscape areas, and shorelines. This includes, but is not limited to; excessive leaves, acorns, blooms, paper, bottles, cans, palm fronds tree limbs, and Disaster Debris from all sites covered in this bid document. The Contractor is responsible for disposal of trash and debris in accordance with all federal, state, and local laws, rules and regulations.

MOWING OF TURF GRASS AREAS: All turf grass areas within specified rights-of-way (medians and shoulders) including adjacent curb gutters shall be cleaned of all trash and/or debris prior to mowing. Mowing of trash and debris to shred into smaller pieces is not allowed.

All turf grass areas shall be mowed as specified in this document. The grass shall not be cut so low as to damage or stress the grass and shall not be allowed to reach a height of six (6) inches or more unless otherwise requested by the City. Heights may vary per location. However, heights shall be as follows:

- St. Augustine –3-3.5 inches
- Argentine Bahia – 3 inches
- Bermuda and Zoysia – 1-2 inches

Areas where large mowers are impractical or where repeated tracks may cause ruts shall be serviced using small push mowers or string trimmers. In the event ruts and or divots are created or damage to the sod occurs, the contractor will be responsible for repairs to or replacement of the sod immediately. Examples include but not limited to the narrow median tips along Dunlawton Avenue, US1 (Ridgewood Avenue) and Nova Road. Mowing of wet turf grass shall be avoided unless permission is authorized by the City. The

Contractor shall leave surrounding areas in a clean condition free of accumulated debris, including but not limited to grass clippings, after each mowing. Large clumps of clippings will be distributed by mechanical blowing or collected and removed. Blowing debris into storm drains, streets, or ponds is prohibited. Materials removed from grounds shall be disposed of off-site by the Contractor in a lawful manner.

MAINTENANCE OF CONCRETE AREAS: Concrete areas are including but not limited to, sidewalks, curbs, driveways, aprons, drainage outfalls, gutters, concrete medians, concrete tips, and the joint where concrete meets asphalt. These areas shall be kept free of ALL debris including but not limited to grass clippings, grass remaining after edging, and **crack grass** from right of way to right of way.

WEEDING OF LANDSCAPE PLANTING BEDS: Weeds, grasses, and other unwanted plant growth shall be **removed** from all planting areas **by hand pulling** to remove the entire root system. The contractor shall remove subsequent dead plant material as needed. **Weeding of all planting beds shall take place during each and every scheduled service to ensure the overall aesthetics of the landscape is not adversely affected by weed growth**. This includes but not limited to pavement, curbs, gutters, concrete medians, sidewalk joints, driveway joints, driveway aprons, mulch beds, rock beds, etc.

EDGING OF TURF GRASS: Contractor shall edge all appropriate surfaces with suitable mechanical equipment, i.e a mechanical edger. In the event the service area is unable to be serviced with an edger, parking areas, walkways, fences, plant beds and tree wells, so that no grass, ground cover or weeds are left extending beyond or over the surface being edged. This includes edging between adjoining beds of dissimilar ground cover types. Edging should not be more than 3 inches from the mulch of plant beds and tree wells. **Chemical edging of plant beds and tree wells is not permitted.** Contractor shall leave surrounding areas in a clean condition free of accumulated debris, including but not limited to grass, after edging. This includes but not limited to pavement, curbs, gutters, concrete medians, sidewalk joints, driveway joints, driveway aprons, mulch beds, rock beds, etc.

STRING TRIMMING OF TURF GRASS: Final string trimming around permanent objects such as metal posts and concrete curbing shall be accomplished with suitable mechanical equipment and at the same cutting heights as the rest of the turf areas. String trimming around tree trunks with mechanical devices is prohibited. Non-mechanical means must be utilized where string trimming may damage wooden posts, decorative light poles or other City property. Ponds, lakes, and ditches(swales) **MUST** be string trimmed to the water line.
*Areas where crack grass is present, **MUST** be string trimmed (burned down) and then chemically sprayed to deter new weed growth. This includes but not limited to pavement, curbs, gutters, concrete medians, sidewalk joints, driveway joints, driveway aprons, etc.

*Areas where growth in swales are unable to be mowed at time of service, a string trimmer **MUST** be used to trim to water height.

BLOWING OF DEBRIS AND TURF GRASS CUTTINGS: Contractor shall blow all appropriate surfaces with suitable mechanical equipment including, but not limited to roadways, driveways, curbs, parking areas, walkways, turf grass areas, plant beds and tree wells as required to leave the area clean and free of debris. Grass clippings and other organic debris **shall not** be blown into the roadway, ponds, lakes, or storm drains.
*Clumping of turf grass is NOT permitted. If clumping occurs, the contractor **MUST** blow to disperse, mulch the clumping, or rake and remove the debris.

ADJUSTING AND REMOVING TREE STAKE KITS: Contractor is required to maintain all newly planted trees in a straight vertical position by adjusting tree stake kits as needed. The

contractor shall also be responsible to completely remove all stake kits approximately six (6) months to one (1) year after initial planting. The contractor shall notify the City representative to advise of a defective stake kit for immediate replacement.

PRUNING OF ORNAMENTAL SHRUBS AND GROUNDCOVERS: Contractor shall prune and shape all ornamental shrubs and ground cover to maintain the natural form of the plant material and maintain its growth within the limitations of the plant bed, to eliminate damaged or diseased wood, and to provide sight distance requirements. **Pruning shall be performed monthly.**

All pruning shall be performed in accordance with the latest approved ANSI-A300 pruning standards.

CREPE MYRTLE TREES: Crepe Myrtle trees shall not be pruned, cut back, or tipped. However, at each visit, the Contractor shall be responsible to remove all crisscross, dead, or broken branches, moss, ferns and vines. The Contractor shall remove all sucker growth between the root ball and bottom of the tree canopy to maintain a minimum clear trunk height of 7 feet 6 inches.

TREES: The contractor shall maintain all trees within the contracted service area by trimming and lifting up to 7 feet 6 inches and will trim young trees to promote healthy growth patterns. These areas are including, but not limited to roadways, driveways, and curbs. Contractor shall remove at each scheduled site visit, including but NOT limited to sucker branches, moss, ferns, and vines.

REMOVING DEAD PLANT MATERIAL: Contractor shall remove and dispose of all dead ornamental trees, shrubs, and ground cover during each scheduled visit. The contractor is responsible to notify the City to determine if a replacement is necessary. The City will determine type/size of replacement. Contractor is only responsible to remove dead ornamental plants as directed by the City.

REPLACEMENT OF PLANT MATERIALS: The City will be responsible to replace all plant materials that are frozen, stolen, vandalized, or otherwise destroyed by unforeseen or unpreventable circumstances. However, if the City determines that the poor condition of plant materials is due to improper maintenance, the Contractor shall be responsible for replacing such plant material at the Contractor's sole expense. The City shall be notified of plants or areas in distress. These areas need to be evaluated for plan of action and monitored by Contactor. No dead plant material shall remain in landscaping. All replacements shall be done within one (1) week of notification. The City inspector/representative shall approve all plant replacements, sizes and specifications.

LANDSCAPE MULCHING: All mulched areas shall be replenished once a year between the winter months of January to March. The Contactor shall remove all existing/old mulch and properly prepare all planting beds by cutting new bed edges, adjusting tree ring sizes, digging new edges along concrete curbs and sidewalks, and removing all weeds and dead plant materials prior to mulching areas with the same type of mulch. Mulch for plant beds should not span more than a foot from the edge of existing plants unless specified by the City inspector/representative. Areas MUST be inspected by City inspector/representative before new mulch is installed. Depth of mulch shall be a minimum of 3 inches and a maximum of 4 inches. The City inspector/representative decides the type of mulch to be replenished per site and if the area's mulch needs aeration or "fluffing" where old mulch is not needed to be removed.

IRRIGATION SYSTEMS: Contractor will use caution around sprinkler heads to minimize damage. The contractor shall be required to repair/replace any irrigation parts that are damaged during

contractor activities. The City will be responsible for the costs to replace any irrigation parts that are stolen, damaged by acts of vandalism, vehicular damage or other unforeseen or unpreventable causes. All non-functional irrigation heads/systems or areas where irrigation appears to be inadequate or malfunctioning shall be reported to the City after each mow.

EROSION: If there is noticeable erosion at any site the Contractor shall immediately notify the City of its location. The Contractor shall be responsible for any erosion damage caused by contractor's equipment or performance of duties.

EQUIPMENT: The Contractor shall have on hand at all times and in good working order such equipment to permit the Contractor to adequately and efficiently perform its contractual duties. All equipment shall be kept in good repair, appearance, and in a sanitary and clean condition at all times. All equipment shall be cleaned of any debris after each site use and prior to moving to another site to prevent transfer of unwanted weeds, grasses, and/or fungus.

All vehicles shall have the name of the Contractor, business telephone number and the vehicle identification number not less than three (3) inches high on each side of the vehicle. The contractor may also place its corporate logo on the vehicles. No offensive or political stickers shall be affixed to any equipment utilized on City property. The Contractor shall supply the City with a listing of the vehicle numbers normally assigned to performance of duties and shall keep the list current.

All equipment shall be kept in good safe operating condition with sharp blades and no leaking of oil and gasoline.

EQUIPMENT STORAGE: The Contractor shall be responsible for storing all equipment and supplies off site. The City will not provide any storage space for the Contractor.

EQUIPMENT FUELING AND LUBRICATING: Mowers and power equipment shall be fueled and lubricated using proper tools and equipment. Any fuel or oil spills are the sole responsibility of the Contractor to clean up and / or remove at the Contractor's expense. Any damage to median plant material by such fuel or oil spills shall be replaced within three (3) days by Contractor at the Contractor's expense.

CONTRACTOR SCHEDULE: Contractor shall submit a calendar schedule of all work. A copy of the yearly calendar shall be submitted to the City. Contractor shall update the schedule on the first of each month and provide to the City Inspector/Representative. The use of noise making equipment is restricted to the hours of 7:00 a.m. to 7:00 p.m. Monday through Saturday and from 10:00 a.m. to 6:00 p.m. on Sundays.

FREEZE DAMAGE: Any freeze damaged plant material shall have dead growth removed as soon as it is deemed safe by the Contractor through appropriate means.

TRAFFIC REGULATION: The Contractor shall conform to Florida Department of Transportation Manual on Traffic Controls and Safe Practices for street and highway construction, maintenance, and utility operations. The Contractor shall provide and maintain adequate barricades, construction signs, flashers, guards, and flaggers as required on pedestrian and vehicular traffic areas. Lane closure to traffic is not permitted. Upon completion of work, contractor shall remove all debris, excess materials and barricades leaving medians and roadways clear of all obstructions.

SAFETY CONSIDERATIONS AND MAINTENANCE OF TRAFFIC (MOT): During mowing/maintenance operations, "MOWING" or "CAUTION MOWING OPERATIONS" signs must be placed on or near affected walkways and other traffic areas. All highway equipment used on right-of-ways must be properly signed and equipped with working safety lights. The Contractor is responsible for being in compliance with all FDOT and OSHA rules and regulations at all times. Within DOT rights-of-way, Maintenance of Traffic Plan (MOT) shall be prepared and implemented by the Contractor when required. All work shall be performed according to FDOT safety and signage recommendations as outlined in their Utility Accommodation Guide, Document Number 710-020-001-b.

- **ALL employees must wear safety vests at all times.**

EXTRAORDINARY OCCURRENCES: It is agreed that in no event shall the City or Contractor be liable or responsible to each other or any other person to perform work herein provided, where such stoppages or delays result from inclement weather, drought or excessive rain, acts of God, fire, or any other cause not within the control of the City and/or the Contractor.

DUNLAWTON MEDIAN CONSTRUCTION: It is expected that during this contract period, the landscaping in the median on Dunlawton between US19 and Spruce Creek Road will be reconstructed. This work will include a new irrigation system, new plant/tree materials, and new sod. Work will proceed in sections. Work sections will be determined during bid award. During this construction period, the successful contractor for this Landscape Maintenance bid will continue to maintain the rights of way along all of Dunlawton and maintain the medians not under construction in accordance with this scope of work. The bid sheet is broken down into median sections and invoicing will reflect those areas not serviced due to the construction.

CONTRACT PERFORMANCE: It is the intent of the City to ensure that the Contractor provides a quality level of landscape and ground maintenance services. All complaints will be reported to, and promptly resolved by the Contractor. The Contractor shall have twenty-four (24) hours to resolve any such complaints. The City may levy administrative charges for infractions by the Contractor at $100.00 per day per incident. Such infractions shall include, but not be limited to:

(a) Failure to resolve complaints within twenty-four (24) hour period.
(b) Failure to provide safe equipment.
(c) Failure to provide required documentation in a timely and accurate manner.
(d) Failure to report damage to irrigation system(s).
(e) Failure to report property damage or personal injury.
(f) Failure to remove all trash from site(s).
(g) Failure to perform scheduled service including, but not limited to, weeding mowing, trimming
(h) Landscape employees not adhering to uniform/protective clothing requirements.

For the purpose of this section, the City may deduct any charges from payments due the Contractor. The City shall notify the Contractor in writing of any action to be taken. In the event the Contractor wishes to contest such assessment, the contractor shall submit a written protest within five (5) days after receiving such notice for an opportunity to be heard by the City and present a defense to such assessment. The City will notify the Contractor in writing of any action taken with respect to Contractor's claims. The decision of the City shall be final.

Based on limited funds, the City may eliminate certain contracted areas or groups in order to stay within the budget. The City may, at its discretion, add or delete similar sized areas as a result of construction or

unanticipated impacts. Therefore, the City reserves the right to reject any and all the bids, eliminate areas from the contract and/or reduce maintenance to any given area when it is in the City's best interest.

INVOICING: Payment shall be determined monthly based on sites inspected and verified. A template will be provided to the contractor, from the City, by Excel format. The template will detail and itemize the contractor's service areas for the month.

***DEDUCTIONS will occur if areas are not completed upon inspection and invoice has been submitted.**

Contract Time and Renewal and CPI Rate Adjustment: Contract will be for three (3) years from date of Notice to Proceed. Contract will be renewable for up to 2 - one-year renewal periods, upon agreement of both parties. Renewal will be approved by the City Manager and the budget will be approved by City Council.

SUPERVISION: The Contractor shall be responsible for all personnel and supervision required in performing work in accordance with these specifications. Supervision will be required for all working hours of the contract.

The Contractor shall comply with all City regulations.

Contractor shall notify the City (via fax, e-mail or in person) daily when the specified scheduled services are fully completed. This is to allow the City to inspect for contract compliance and authorization for scheduled payments. City approved representatives of the Contractor shall be available to meet with the City as required to accomplish the City's objectives. All meetings with the City will be at no charge.

CONTACT PERSON: The Contractor shall provide the name and telephone number of a contact person in case of an emergency. The Contractor shall provide the name and telephone number of a representative to meet periodically with the City. The City reserves the right to accept or reject any employee of the Contractor.

All personnel must be visible as Contractor's employee(s) by uniform while on City property. The Contractor's work force shall be neat and clean in appearance and shall wear identification. Identification shall include the employee's name and company name.

MAPS of Locations:
https://portorange.sharepoint.com/:f:/g/pw/admin/Eh6qS1piX-VPp8GGiXtq_o0BQ80dIj8tTzDdAxHAAVyixA

[Remainder of this page left intentionally blank]

End of Scope of Work

EXHIBIT "2"

Payment and Performance Bond

Consisting of 3 Pages

FRONT PAGE FOR BOND REQUIRED BY SECTION 255.05, F.S.

PAYMENT AND PERFORMANCE BOND

(Public Works)

Notice and Time Limitations Must Be In Accordance
With Section 255.05(2), (8) and (10), Florida Statutes

BOND NO. 107031915

PRINCIPAL:

Developer or Contractor:	VerdeGo, LLC
Principal Business Address:	3335 North State Street Bunnell, Florida 32110
Contact Person:	Terry McNitt, Jr., Managing Member
Phone Number:	(386) 931-6018

SURETY:	Travelers Casualty and Surety Company of America
Address:	One Tower Square Hartford, CT 06183
Contact Person:	Rebekah Tolbert
Phone Number:	407-388-3271

OWNER:	City of Port Orange, Florida, a chartered municipal corporation 1000 City Center Circle Port Orange, Florida 32129-4144
Contact Person:	City Manager
Phone Number:	(386) 506-5501

Amount: $254,794.06 **City Project Number: ITB 19-18 Major Thoroughfare Landscape Maintenance**

Description of Work: Major Thoroughfare Landscape Maintenance

Project Location: Various locations in and around Port Orange, Volusia County, Florida

Legal Description: Locations within City of Port Orange, Volusia County, Florida for all public works identified in ITB 19-18

Front Page

All other pages are subsequent to this page regardless of any numbers that may be printed thereon.

[CA8897]
[MTR/sal 2015-02-10]

VerdeGo, LLC

ITB 19-18 Major Thoroughfare Landscape Maintenance

Bond No. 107031915

COMBINATION PAYMENT AND PERFORMANCE BOND FOR PUBLIC CONSTRUCTION

per Section 255.05, Florida Statutes

Guaranty for Construction of Public Improvements

BY THIS BOND, We, **VerdeGo, LLC**, as Principal, and Travelers Casualty and Surety Company of America, a corporation, as Surety, are bound to **CITY OF PORT ORANGE, FLORIDA**, a Florida municipal corporation, herein called "Owner" or sometimes referred to as "City," in the sum of **TWO HUNDRED FIFTY-FOUR THOUSAND SEVEN HUNDRED NINETY-FOUR AND 06/100 DOLLARS ($254,794.06)**, for payment of which we bind ourselves, our heirs, personal representatives, successors, and assigns, jointly and severally.

THE CONDITION OF THIS BOND is that if Principal:

1. Performs the terms of that certain Standard Contract for Services, having an effective date of September 27, 2019, entered into by and between the Principal and the City, for Major Thoroughfare Landscape, hereinafter referred to as the "Contract," being made a part of this bond by reference, at the times and in the manner prescribed in the Contract; and

2. Promptly makes payments to all claimants, as defined in Section 255.05(1), Florida Statutes, supplying Principal with labor, materials, or supplies, used directly or indirectly by Principal in the prosecution of the work provided for in the Contract (the "Work"); and

3. Pays Owner all losses, damages, delay damages (including contractually authorized liquidated damages), expenses, costs, and attorney's fees, including appellate proceedings, that Owner sustains because of a breach or material breach by Principal under the Contract documents; and

4. Performs the guarantee of all work and materials furnished under the Contract for the time specified in the Contract, then this bond is void; otherwise it remains in full force.

Notice of Nonpayment and Time Limitations

Any action instituted by a claimant under this bond for payment must be in accordance with the notice and time limitation provisions in Sections 255.02(2), (8) and (10), Florida Statutes.

Any changes in or under the contract documents and compliance or noncompliance with any formalities connected with the contract or the changes does not affect Surety's obligation under this bond.

IN WITNESS WHEREOF, this performance and payment bond is executed and shall be deemed an original, this 23, day of Sept, 2019.

Attest:

CODY WARREN
Commission # FF 961682
Expires February 17, 2020
Bonded Thru Troy Fain Insurance 800-385-7019

VERDEGO, LLC
(Principal)

Cody Warren
(As to Corporate Principal) Secretary

By: _____
Terry McNitt, Jr., Managing Member

(Witness to Principal)

(Corporate Seal)

Travelers Casualty and Surety Company of America
(Surety)

(Witness to Surety)

By: _____
Name: Tyler D. DeBord
(Attorney-in-Fact)

(Corporate Seal)

NOTE: ***Date of BOND must not be prior to date of Contract.*** *If Developer/Principal is Partnership, all partners should execute BOND. All BONDS signed by an agent must be accompanied by a certified copy of the authority to act.*

IMPORTANT: Surety companies executing BONDS must appear on the Treasury Department's most current list (Circular 570 as amended) and be authorized to transact business in the State of Florida.

TRAVELERS	**Travelers Casualty and Surety Company of America** **Travelers Casualty and Surety Company** **St. Paul Fire and Marine Insurance Company**

POWER OF ATTORNEY

KNOW ALL MEN BY THESE PRESENTS: That Travelers Casualty and Surety Company of America, Travelers Casualty and Surety Company, and St. Paul Fire and Marine Insurance Company are corporations duly organized under the laws of the State of Connecticut (herein collectively called the "Companies"), and that the Companies do hereby make, constitute and appoint **Tyler D. DeBord** of **Daytona Beach, Florida**, their true and lawful Attorney-in-Fact to sign, execute, seal and acknowledge any and all bonds, recognizances, conditional undertakings and other writings obligatory in the nature thereof on behalf of the Companies in their business of guaranteeing the fidelity of persons, guaranteeing the performance of contracts and executing or guaranteeing bonds and undertakings required or permitted in any actions or proceedings allowed by law.

IN WITNESS WHEREOF, the Companies have caused this instrument to be signed, and their corporate seals to be hereto affixed, this **3rd** day of **February, 2017**.

State of Connecticut

City of Hartford ss.

By: Robert L. Raney, Senior Vice President

On this the **3rd** day of **February, 2017**, before me personally appeared **Robert L. Raney**, who acknowledged himself to be the Senior Vice President of Travelers Casualty and Surety Company of America, Travelers Casualty and Surety Company, and St. Paul Fire and Marine Insurance Company, and that he, as such, being authorized so to do, executed the foregoing instrument for the purposes therein contained by signing on behalf of the corporations by himself as a duly authorized officer.

In Witness Whereof, I hereunto set my hand and official seal.

My Commission expires the **30th** day of **June, 2021**

Marie C. Tetreault, Notary Public

This Power of Attorney is granted under and by the authority of the following resolutions adopted by the Boards of Directors of Travelers Casualty and Surety Company of America, Travelers Casualty and Surety Company, and St. Paul Fire and Marine Insurance Company, which resolutions are now in full force and effect, reading as follows:

RESOLVED, that the Chairman, the President, any Vice Chairman, any Executive Vice President, any Senior Vice President, any Vice President, any Second Vice President, the Treasurer, any Assistant Treasurer, the Corporate Secretary or any Assistant Secretary may appoint Attorneys-in-Fact and Agents to act for and on behalf of the Company and may give such appointee such authority as his or her certificate of authority may prescribe to sign with the Company's name and seal with the Company's seal bonds, recognizances, contracts of indemnity, and other writings obligatory in the nature of a bond, recognizance, or conditional undertaking, and any of said officers or the Board of Directors at any time may remove any such appointee and revoke the power given him or her; and it is

FURTHER RESOLVED, that the Chairman, the President, any Vice Chairman, any Executive Vice President, any Senior Vice President or any Vice President may delegate all or any part of the foregoing authority to one or more officers or employees of this Company, provided that each such delegation is in writing and a copy thereof is filed in the office of the Secretary; and it is

FURTHER RESOLVED, that any bond, recognizance, contract of indemnity, or writing obligatory in the nature of a bond, recognizance, or conditional undertaking shall be valid and binding upon the Company when (a) signed by the President, any Vice Chairman, any Executive Vice President, any Senior Vice President or any Vice President, any Second Vice President, the Treasurer, any Assistant Treasurer, the Corporate Secretary or any Assistant Secretary and duly attested and sealed with the Company's seal by a Secretary or Assistant Secretary; or (b) duly executed (under seal, if required) by one or more Attorneys-in-Fact and Agents pursuant to the power prescribed in his or her certificate or their certificates of authority or by one or more Company officers pursuant to a written delegation of authority; and it is

FURTHER RESOLVED, that the signature of each of the following officers: President, any Executive Vice President, any Senior Vice President, any Vice President, any Assistant Vice President, any Secretary, any Assistant Secretary, and the seal of the Company may be affixed by facsimile to any Power of Attorney or to any certificate relating thereto appointing Resident Vice Presidents, Resident Assistant Secretaries or Attorneys-in-Fact for purposes only of executing and attesting bonds and undertakings and other writings obligatory in the nature thereof, and any such Power of Attorney or certificate bearing such facsimile signature or facsimile seal shall be valid and binding upon the Company and any such power so executed and certified by such facsimile signature and facsimile seal shall be valid and binding on the Company in the future with respect to any bond or understanding to which it is attached.

I, **Kevin E. Hughes**, the undersigned, Assistant Secretary of Travelers Casualty and Surety Company of America, Travelers Casualty and Surety Company, and St. Paul Fire and Marine Insurance Company, do hereby certify that the above and foregoing is a true and correct copy of the Power of Attorney executed by said Companies, which remains in full force and effect.

Dated this 27th day of September, 2019.

Kevin E. Hughes, Assistant Secretary

To verify the authenticity of this Power of Attorney, please call us at 1-800-421-3880.
Please refer to the above-named Attorney-in-Fact and the details of the bond to which the power is attached.

CERTIFICATE OF LIABILITY INSURANCE

DATE (MM/DD/YYYY): 09/29/2021

THIS CERTIFICATE IS ISSUED AS A MATTER OF INFORMATION ONLY AND CONFERS NO RIGHTS UPON THE CERTIFICATE HOLDER. THIS CERTIFICATE DOES NOT AFFIRMATIVELY OR NEGATIVELY AMEND, EXTEND OR ALTER THE COVERAGE AFFORDED BY THE POLICIES BELOW. THIS CERTIFICATE OF INSURANCE DOES NOT CONSTITUTE A CONTRACT BETWEEN THE ISSUING INSURER(S), AUTHORIZED REPRESENTATIVE OR PRODUCER, AND THE CERTIFICATE HOLDER.

IMPORTANT: If the certificate holder is an ADDITIONAL INSURED, the policy(ies) must have ADDITIONAL INSURED provisions or be endorsed. If SUBROGATION IS WAIVED, subject to the terms and conditions of the policy, certain policies may require an endorsement. A statement on this certificate does not confer rights to the certificate holder in lieu of such endorsement(s).

PRODUCER

Brown & Brown of Tennessee, Inc.
6 Cadillac Drive, Suite 200
Brentwood TN 37027

CONTACT NAME: Tasha Felts, TIIA
PHONE (A/C, No, Ext): (615) 385-2860 FAX (A/C, No): (615) 385-8360
E-MAIL ADDRESS: tfelts@bbtennessee.com

INSURER(S) AFFORDING COVERAGE	NAIC #
INSURER A: Travelers Property Casualty Company of America	25674
INSURER B: The Travelers Indemnity Company of Connecticut	25682
INSURER C:	
INSURER D:	
INSURER E:	
INSURER F:	

INSURED

Verdego, LLC
3335 N. State Street
Bunnell FL 32110

COVERAGES **CERTIFICATE NUMBER:** **REVISION NUMBER:**

THIS IS TO CERTIFY THAT THE POLICIES OF INSURANCE LISTED BELOW HAVE BEEN ISSUED TO THE INSURED NAMED ABOVE FOR THE POLICY PERIOD INDICATED. NOTWITHSTANDING ANY REQUIREMENT, TERM OR CONDITION OF ANY CONTRACT OR OTHER DOCUMENT WITH RESPECT TO WHICH THIS CERTIFICATE MAY BE ISSUED OR MAY PERTAIN, THE INSURANCE AFFORDED BY THE POLICIES DESCRIBED HEREIN IS SUBJECT TO ALL THE TERMS, EXCLUSIONS AND CONDITIONS OF SUCH POLICIES. LIMITS SHOWN MAY HAVE BEEN REDUCED BY PAID CLAIMS.

INSR LTR	TYPE OF INSURANCE	ADDL INSD	SUBR WVD	POLICY NUMBER	POLICY EFF (MM/DD/YYYY)	POLICY EXP (MM/DD/YYYY)	LIMITS	
A	[X] COMMERCIAL GENERAL LIABILITY [ ] CLAIMS-MADE [X] OCCUR GEN'L AGGREGATE LIMIT APPLIES PER: [ ] POLICY [X] PRO-JECT [ ] LOC OTHER:			TC2JGLSA-3P390744-TIL-21	10/01/2021	10/01/2022	EACH OCCURRENCE	$ 1,000,000
							DAMAGE TO RENTED PREMISES (Ea occurrence)	$ 1,000,000
							MED EXP (Any one person)	$ 5,000
							PERSONAL & ADV INJURY	$ 1,000,000
							GENERAL AGGREGATE	$ 2,000,000
							PRODUCTS - COMP/OP AGG	$ 2,000,000
								$
A	AUTOMOBILE LIABILITY [X] ANY AUTO [ ] OWNED AUTOS ONLY [ ] SCHEDULED AUTOS [ ] HIRED AUTOS ONLY [ ] NON-OWNED AUTOS ONLY			TC2JCAP-3P390756-TIL-21	10/01/2021	10/01/2022	COMBINED SINGLE LIMIT (Ea accident)	$ 5,000,000
							BODILY INJURY (Per person)	$
							BODILY INJURY (Per accident)	$
							PROPERTY DAMAGE (Per accident)	$
								$
A	[X] UMBRELLA LIAB [X] OCCUR [ ] EXCESS LIAB [ ] CLAIMS-MADE [ ] DED [X] RETENTION $ 10,000			ZUP-16P13057-21-NF	10/01/2021	10/01/2022	EACH OCCURRENCE	$ 10,000,000
							AGGREGATE	$ 10,000,000
								$
B	WORKERS COMPENSATION AND EMPLOYERS' LIABILITY ANY PROPRIETOR/PARTNER/EXECUTIVE OFFICER/MEMBER EXCLUDED? Y/N [ ] (Mandatory in NH) If yes, describe under DESCRIPTION OF OPERATIONS below	N/A		UB-4S050569-21-51-K	10/01/2021	10/01/2022	[X] PER STATUTE [ ] OTH-ER	
							E.L. EACH ACCIDENT	$ 1,000,000
							E.L. DISEASE - EA EMPLOYEE	$ 1,000,000
							E.L. DISEASE - POLICY LIMIT	$ 1,000,000
A	Inland Marine			QT-630- 4S014177-TIL-21	10/01/2021	10/01/2022	Leased/ Rented Equip	$100,000
							Deductible	$1,000

DESCRIPTION OF OPERATIONS / LOCATIONS / VEHICLES (ACORD 101, Additional Remarks Schedule, may be attached if more space is required)

Certificate holder is included as Additional Insured on the General Liability, Automobile and Umbrella policies on a Primary and Non-Contributory basis as required by written contract. A Waiver of Subrogation applies on all policies as their interest may be per written contract. A 30 Day Notice of Cancellation applies. The Umbrella policy follows form of the General Liability (including completed operations), Automobile Liability, and Workers' Compensation policies.

CERTIFICATE HOLDER

CITY OF PORT ORANGE
1000 CITY CENTER CIRCLE
PORT ORANGE FL 32129

CANCELLATION

SHOULD ANY OF THE ABOVE DESCRIBED POLICIES BE CANCELLED BEFORE THE EXPIRATION DATE THEREOF, NOTICE WILL BE DELIVERED IN ACCORDANCE WITH THE POLICY PROVISIONS.

AUTHORIZED REPRESENTATIVE

© 1988-2015 ACORD CORPORATION. All rights reserved.

AMENDMENT NO. 1

THIS AMENDMENT NO. 1 OF STANDARD CONTRACT FOR SERVICES ("Amendment") is made and entered into the day and year set forth hereinafter by and between the **CITY OF PORT ORANGE, FLORIDA**, a Florida municipal corporation located at 1000 City Center Circle, Port Orange, Volusia County, Florida 32129-4144 (the "City"), and **VERDEGO, LLC** ("Contractor"), a Florida limited liability corporation whose principal address is 3335 North State Street, Bunnell, Florida 32110. The City and Contractor are collectively referred to herein as the "Parties."

WHEREAS, on the 27th day of September 2019, City and Contractor entered into Contract for Major Thoroughfare Landscape Maintenance, pursuant to Invitation to BID No. 19-18 (the "Contract"), and provides for an initial three (3) year term with the option to renew for up to two (2) one-year periods, upon mutual written agreement of the parties, subject to review and approval of the City Manager; and

WHEREAS, Contract includes landscape maintenance services for Dunlawton Avenue medians, from Spruce Creek Road, West, to I-95; and

WHEREAS, the Parties desire to amend Contract to remove the portion of landscape maintenance services for Dunlawton Avenue medians, from Spruce Creek Road, West, to I-95, as this portion of Dunlawton Avenue shall be maintained under ITB 19-15 SR421 Medians Maintenance Agreement dated February 10, 2021; and

WHEREAS, the Port Orange Interim City Manager has determined that the execution of this Amendment is beneficial to the citizens of the City of Port Orange.

NOW, THEREFORE, the Parties, for good and valuable consideration, the receipt and sufficiency of which are hereby acknowledged, agree as follows:

1. The foregoing recitals are true and correct and incorporated herein.

2. Contract Exhibit "1" is hereby amended to remove the portion of landscape maintenance services for Dunlawton Avenue medians, from Spruce Creek Road, west, to I-95.

3. *Counterparts.* This Amendment may be executed in one or more counterparts, each of which shall be deemed to be an original but all of which together shall constitute one and the same instrument. The delivery by facsimile or e-mail of an executed copy of this Amendment shall be deemed valid as if an original signature was delivered. No contract shall be formed between Contractor and the City until the City signs this Amendment.

4. All other terms and conditions of the Contract shall remain in full force and effect.

IN WITNESS WHEREOF, the Parties hereto have signed, sealed, and delivered this Amendment on the day and year stated hereinafter.

Witnesses:

Printed Name: Alan Hall

Printed Name: Cheryl Homstein

VERDEGO, LLC

By: _____
Terry McNitt, Jr., Managing Member

If this Contract is signed by an individual not identified as the Managing Member of the company in the records of the Florida Department of State, Division of Corporations, please provide written authorization for that individual to enter into contracts on behalf of the company.

Date: 2/19/21

STATE OF FLORIDA
COUNTY OF FLAGLER

The foregoing instrument was acknowledged before me by means of ✓ physical presence or ____ online notarization, this 19th day of February, 2021, by Terry McNitt, Jr., as Managing Member of VerdeGo, LLC, a Florida limited liability corporation. He is ✓ personally known or ____ produced _____ as identification.

DENISE TANGUILIG
Notary Public - State of Florida
Commission # GG 237938
My Comm. Expires Nov 9, 2022
Bonded through National Notary Assn.

Notary Public, State of Florida
Printed, typed or stamped name, commission and expiration:

Witnesses:

Printed Name: Susan L. Cavello

Printed Name: Matt Jones

CITY OF PORT ORANGE

By: _____
Donald O. Burnette, Mayor

Date: 3/9/2021

STATE OF FLORIDA
COUNTY OF VOLUSIA

The foregoing instrument was acknowledged before me by means of ✓ physical presence or ____ online notarization, this 9 day of March, 2021, by Donald O. Burnette, as Mayor of the City of Port Orange, a Florida municipal corporation, on behalf of the city. ~~She~~ He is ✓ personally known or ____ produced _____as identification.

MATTHEW J. JONES
Commission # GG 931831
Expires January 23, 2024
Bonded Thru Troy Fain Insurance 800-385-7019

Notary Public, State of Florida
Printed, typed or stamped name, commission and expiration:

Witnesses:

Printed Name: Susan L Cavello

Printed Name: Matt Jones

ATTEST:

By: _____
Robin L. Fenwick, MMC, City Clerk

Date: 3/9/2021

STATE OF FLORIDA
COUNTY OF VOLUSIA

The foregoing instrument was acknowledged before me, by means of ✓ physical presence or ____ online notarization, this 9 day of March, 2021, by Robin L. Fenwick, as City Clerk of the City of Port Orange, a Florida municipal corporation, on behalf of the city. She is ✓ personally known or ____ produced _____as identification.

MATTHEW J. JONES
Commission # GG 931831
Expires January 23, 2024
Bonded Thru Troy Fain Insurance 800-385-7019

Notary Public, State of Florida
Printed, typed or stamped name, commission and expiration:

"ATTACHMENT 1" SCHEDULE OF UNIT PRICING
BID FORM
CITY OF PORT ORANGE
ITB # 19-18
MAJOR THROUGHFARE LANDSCAPING MAINTENANCE
Completed Attachment 1 Bid Proposal form MUST be included with Bid
Instruction to save Attachment from DemandStar website:

Bidders are required to complete all fields shaded in green ONLY. All other fields will be automatically calculated.

NAME OF BUSINESS:	VerdeGo Landscape
CONTACT PERSON:	Billy Genovese
EMAIL ADDRESS:	bgenovese@verdego.com
AUTHORIZED NAME:	
AUTHORIZED	

Verdego
CA6897

RIGHTS OF WAY MAINTENANCE LEVELS
Maintenance - 52 Services
Mulch - 1 x per Year

	ROAD NAME	SQUARE FOOTAGE	ACRES	MAINTENANCE COST PER Service	MAINTENANCE TOTAL ANNUAL COST	MULCH QUANTITIES Cubic yards	MULCH COST PER Application	TOTAL ANNUAL COST ALL APPLICATIONS
1	Causeway and High Rise Bridge	32,427	0.72	$335.02	$17,421.04	131	$5,895.00	$23,316.04
2	Ridgewood Avenue Medians	140,852	3.23	$467.60	$24,315.30	140	$6,300.00	$30,615.30
	North City Limits to Ocean Ave			$23.38			$350.00	
	Ocean Ave to Herbert St			$23.38			$350.00	
	Herbert St to Dunlawton Ave			$23.38			$350.00	
	Dunlawton Ave to Meeker Place			$23.38			$350.00	
	Meeker Place to Oak St			$23.38			$350.00	
	Oak St to Fox Place			$23.38			$350.00	
	Fox Place to White St			$23.38			$350.00	
	White St to Fleming Ave			$23.38				
	Fleming Ave to Norman St			$23.38			$350.00	
	Norman St to Rogers Place			$23.38			$350.00	
	Rogers Place to Howes St			$23.38			$350.00	
	Howes St to Clark Place			$23.38				
	Clark Place to Fitzgerald Place			$23.38			$350.00	
	Fitzgerald Place to Niver St			$23.38			$350.00	
	Niver St to Kiep Dr			$23.38			$350.00	
	Kiep Dr to 5584 S. Ridgewood			$23.38			$350.00	
	5584 S. Ridgewood to Farmbrook Rd			$23.38			$350.00	
	Farmbrook Rd to E. Bayshore Dr			$23.38			$350.00	
	E. Bayshore Dr to Nova Rd			$23.38			$350.00	
	Nova Rd to South City Limits (Rose Bay Bridge)			$23.38			$350.00	
3	Ridgewood Avenue Roadsides	78,910	1.81	$617.00	$32,084.00	N/A		$32,084.00
4	Dunlawton Avenue Medians	338,744	7.78	$741.00	$38,532.00	Included in H22 above		$38,532.00
	Summertrees Road to I-95	Keep		$57.00				
	I-95 to 1788 Dunlawton Ave			$57.00				
	1788 Dunlawton to Yorktowne Blvd			$57.00				
	Yorktowne Blvd to Clyde Morris Blvd			$57.00				
	Clyde Morris Blvd to Victoria Garden/City Center Pkw.			$57.00				
	Victoria Garden/City Center Pkw.to N. Swallow Tail/ Village Trail			$57.00				
	N. Swallow Tail/ Village Trail to S. Swallow Tail Dr			$57.00				
	S. Swallow Tail Dr to Jackson St.			$57.00				
	Jackson St. to Dunlawton Hills Subdivision			$57.00				
	Dunlawton Hills to Oak St			$57.00				
	Oak St to Spruce Creek Rd			$57.00				
	Spruce Creek Rd to RR Crossing	KEEP		$57.00				
	RR Crossing to US 1	KEEP		$57.00				
5	Dunlawton Avenue Roadsides*	791,044	18.16	$1,410.00	$73,320.00	N/A		$73,320.00
6	Nova Road Medians	90,208	2.07	$371.79	$19,333.08	12	$540.00	$19,873.08
	Isabelle Ave to Regency Blvd			$41.31			$60.00	
	Regency Blvd to Wood St			$41.31			$60.00	
	Wood St to Durant Dr			$41.31			$60.00	
	Durant Dr to Spruce Creek Rd			$41.31			$60.00	
	Spruce Creek Rd to Miles Dr			$41.31			$60.00	
	Miles Dr to Tree Garden Dr			$41.31			$60.00	
	Tree Garden Dr to Village Trl			$41.31			$60.00	
	Village Trl to Dunlawton Ave			$41.31			$60.00	
	Dunlawton Ave to Eagle Lake Trl			$41.31			$60.00	
7	Nova Road Roadsides*	404,895	9.26	$712.57	$37,053.64	N/A		$37,053.64
							Total Bid Cost	$254,794.06

Remove

Amendment No. 1

All but 3 areas will now be under new contract (CA6963) pursuant to Dunlawton Ave. beautification project completion.

10 median areas to Remove x 57.00/ea = 570.00 x 52 = $29,640.00

$254,794.06 - $29,640.00 = $225,154.06 Revised Annual Cost

Agenda Name: Regular City Council Meeting
Item Name: Amendment No. 1 to Contract CA6897 Ve[illegible]o LLC (ITB 19-18)

Comment By	Date/Time	Comment
Kynah Cockcroft	2/4/2021 11:18:13 AM	Contract CA6897 - curent total annual cost $254,794.06. Total annual cost for maintenance of the Dunlawton medians, Sp Creek Road, west, to I-95, under this contract is $29, 640.00. Amendment No. 1 requested to remove these medians from this contract as services will now be provided under a newly executed contract under the Dunlawton Avenue beautification project (ITB 19-15). Amendment No. 1 will reduce the total annual cost under CA6897 to $225,154.06.

City of Port Orange
Public Works & Utilities Department

TO: Jamie Miller, PHR - Interim City Manager

THRU: Lynn Stevens, Public Works & Utilities Director

FROM: Julia Wiggins, Business Manager Public Works & Utilities

DATE: February 4, 2021

SUBJECT: Amendment No. 1 to Standard Contract for Services CA6897, VerdeGo LLC (ITB 19-18 Major Thoroughfare Landscaping Maintenance)

REQUEST:
The Public Works & Utilities Department is requesting City Council approve Amendment No. 1 to remove maintenance service for the Dunlawton Avenue medians, from Spruce Creek Road, west, to I-95, from current contract with Verdego LLC (CA6897).

PURPOSE:
The purpose of this request is to reduce a portion of the landscape maintenance services required under the existing contract with Verdego LLC as the services will now be performed under a newly executed contract (CA6963) with Verdego LLC pursuant to project completion (ITB #19-15 Dunlawton Avenue Median Landscape Beautification).

CONSIDERATION:
Verdego Landscape, LLC was awarded ITB 19-15, Dunlawton Avenue Median Landscape Beautification, and a one-year maintenance contract was part of the bid award.

Verdego LLC currently has a Standard Contract for Services (CA6897) with the City that was awarded pursuant to ITB #19-18, Major Thoroughfare Landscaping Maintenance and a portion of this contract includes medians that were improved under the beautification project.

These medians, from Spruce Creek Road, west, to I-95, need to be removed from the current contract as services will be performed under the newly executed contract with Verdego, CA6963.

The current annual cost for landscape maintenance under CA6897 with Verdego LLC is $254,794.06. Amendment No. 1 will revise/reduce the total annual cost to $225,154.06.

FUNDING:
Fund: 001
Fund Name: General Fund
Cost Center: Public Works
Program: Grounds Maintenance
Spend Category: Grounds Maintenance
Budget: $254,794.06 (for this contract only)
Actual (revised post Amend.No1): $225,154.06 (for this contract only)

RECOMMENDATION:
The Public Works & Utilities Department recommends City Council approve Amendment No. 1 to the contract (CA6897) with Verdego LLC to remove a portion of the Dunlawton medians, Spruce Creek Road, west, to I-95, as these services will now be performed under a separate contract (post Dunlawton Avenue median beautification) project.

ANTICIPATED SCHEDULE:
a.) Council Approval: March 2, 2021
b.) Executed Amendment No. 1: March 3, 2021

ATTACHMENTS:
a.) Executed contract CA6897 with Verdego LLC

CITY COUNCIL AGENDA ITEM

REQUESTED COUNCIL MEETING DATE 3/2/2021

Consent item: Yes

SUBJECT: (B7b) Amendment No. 1 to Contract CA6897 Verdego LLC (ITB 19-18)

DEPARTMENT: Public Works

GOAL:

RECOMMENDED MOTION: Move to approve Amendment No. 1 to the contract (CA6897) with Verdego LLC to remove a portion of the Dunlawton Avenue medians, Spruce Creek Road, west, to I-95, as these will now be maintained under a newly executed contract with Verdego LLC pursuant to the completion of the Dunlawton Avenue median beautification project (ITB 19-15); subject to City Attorney and City Manager review and approval of final contract documents; and authorizing the Mayor and City Clerk to execute all contract documents.

SUMMARY: On September 27, 2019, the City entered a Standard Contract for Services (CA6897) with Verdego LLC for the annual cost of $254,794.06 for landscape maintenance on major thoroughfares (ITB 19-18, Major Thoroughfare Landscaping Maintenance).

Included in this contract is maintenance of the Dunlawton medians, from Spruce Creek Road, west, to I-95. These medians have since been improved under ITB19-15, Dunlawton Avenue Median Landscape Beautification project. The beautification project was awarded to Verdego LLC and a maintenance contract was part of the bid award.

Amendment No. 1 will remove the Dunlawton medians, Spruce Creek Road, west, to I-95, from the current contract with Verdego LLC, CA6897, as these services will now be performed under the newly executed contract with Verdego LLC, CA6963. Amendment No. 1 will reduce the total annual cost under contract CA6897 to $225,154.06.

Project No.: Funding Account No.:

Presenter: Lynn Stevens

ATTACHMENTS:

1.	Justification Memo AMENDMENT NO 1 CA6897 Verdego LLC ITB 19 18 Major Thoroughfare Landscape Maintenance remove portion of Dun Ave Medians	Justification Memo AMENDMENT NO 1 CA6897 Verdego LLC ITB 19 18 Major Thoroughfare Landscape Maintenance remove portion of Dun Ave Medians.docx
2.	EXECUTED CA6897 Verdego Thoroughfare Landscape maint eff 10 1 2019 to 9 30 2022 with option to renew	EXECUTED CA6897 Verdego Thoroughfare Landscape maint eff 10 1 2019 to 9 30 2022 with option to

		renew.pdf
3.	RECORDED ITB 19-18 VerdeGo Payment and Performance Bond Major Thoroughfare Landscape Maintenanc	RECORDED ITB 19-18 VerdeGo Payment and Performance Bond Major Thoroughfare Landscape Maintenanc.pdf

Kynah Cockcroft	Created/Initiated - 2/4/2021
Kynah Cockcroft	Approved - 2/4/2021
Julia Wiggins	New -
Tom DiEulio	
John Folk	
Lynn Stevens	
Lupe Reyna-Coffin	
Scott Neils	
Matthew Jones	
Jamie Miller	
Robin Fenwick	

CITY COUNCIL AGENDA ITEM

COUNCIL MEETING DATE 9/20/2022

SUBJECT: (C8g) Approval of Change Order No. 2 to Brightly Software Inc. (Formerly Dude Solutions, Inc.) Piggyback Agreement for Community Development Permit Software Project (SmartGov)

DEPARTMENT: Community Development

GOAL: 6 - Organizational Excellence

RECOMMENDED MOTION: Move to approve Change Order No. 2 to Brighty Software Inc. (Formerly Dude Solutions, Inc.) Piggyback Agreement for Community Development Permit Software Project (Smartgov) for an extension to the original contract of forty-five (45) days for the Community Development Software System Project (SmartGov); and authorizing the Mayor and City Clerk to execute all contract documents.

SUMMARY: On January 11, 2021, the City entered into a Piggyback Contract under Region 4 Education Service Center (ESC) Contract R161802 for Facilities Management Software and Solutions with Brightly Software Inc. (Formerly Dude Solutions, Inc.) for the Community Development Permit Software System Project (SmartGov). In March 2022, Dude Solutions, Inc. changed its name to Brightly Software and will be referred to as “Brightly Software” in Amendment No. 2. In order to complete the project, Staff is requesting to extend the contract term to forty-five (45) days. The current contract expires on September 27, 2022. City staff is requesting an additional fifteen days (15) days be added to the agreement to add sufficient time for staff training and to complete the project. The original contract also provides thirty (30) days of Brightly staff providing support to the City once the software project goes live, which will add an additional thirty (30) days to the extension request making a total extension to the contract term of forty-five (45) days or November 11, 2022. Brightly will only launch software on a Tuesday and staff anticipates the launch of the software on either October 4 or October 11.

PRESENTER: Tim Burman

ATTACHMENTS:

1.	Brightly Software Change Order No 2	Brightly Software Change Order No 2.pdf
2.	Executed Dude Solutions PB Agreement (1)	Executed Dude Solutions PB Agreement (1).pdf
3.	Dude Solutions Change Order 1	Dude Solutions Change Order 1.pdf
4.	Brightly Software Inc. fka Dude	Brightly Software Inc. fka Dude Solutions

	Solutions Inc. Amendment No 1 (1)	Inc. Amendment No 1 (1).pdf

Tim Burman	Created/Initiated - 8/31/2022
Tim Burman	Approved - 8/31/2022
John McKinney	Approved - 9/7/2022
Matthew Jones	Approved - 9/9/2022
Wayne Clark	Approved - 9/9/2022
Robin Fenwick	Final Approval - 9/9/2022

CHANGE ORDER NO. 2
To Piggyback Agreement dated January 11, 2021,
Between the City of Port Orange and Brightly Software, Inc. f/k/a Dude Solutions, Inc.

Project: Community Development Permit Software Project (SmartGov)

The following changes are hereby made to the Contract Documents:

CHANGE IN CONTRACT PRICE:	**CHANGE IN CONTRACT TIMES**:
Original Contract Price: $ 88,085.47	Original Contract Times: Effective January 11, 2021 Final Completion: March 31,2022
Net changes from previous Change Order: Change Order No. 1 $15,295.00 Amendment No. 1 $21,850.00	Changes in contract time from previous Change Orders: Change Order No. 1: 90 days Final Completion: June 29, 2022 Amendment No. 1 90 days Final Completion: September 27, 2022
Contract Price prior to this Change Order: Amendment No. 1 $125,230.47	Contract Completion Date prior to this Change Order No. 2: Final Completion: September 27, 2022
Net Increase (decrease) of this Change Order No. 2: Change Order No. 2 N/A	Changes in contract time requested this Change Order No. 2: (Requires Council Approval) Change Order No. 2: 45 days November 11, 2022
Contract Price with all approved Change Orders: $125,230.47	Contract Times with all approved Change Orders: Final Completion: November 11,2022

CHANGES ORDERED:

I. GENERAL: This Change Order is necessary to cover changes in the work to be performed under the Piggyback Agreement entered by and between the parties on January 11,2021.

II. REQUIRED CHANGES: This Change Order is necessary to add an additional fifteen (15) days for staff training and an additional thirty (30) days for Brightly staff providing support to the City once the software project goes live, for a total extension of contract term being an additional forty-five (45) days or until November 11, 2022.

III. JUSTIFICATION: This Change Order is necessary to add an additional forty-five (45) days to the agreement to add sufficient time for staff training and to complete the project.

Changes in scope require Council approval. Is this a change in scope or time? Yes

IV. PAYMENT: Payment for this Change Order shall be made in accordance with the terms of the Piggyback Agreement subject to a limit not to exceed **$125,230.47**. All payments shall be governed by the Local Government Prompt Payment Act as set forth in Florida Statutes Section 218.70 through 218.79, as amended.

Acknowledgments:

The change, and work affected thereby, is subject to all provisions of the original contract not specifically changed by this Change Order.

It is expressly understood and agreed that the approval of the Change Order shall have no effect on the original contract other than matters expressly provided herein.

The prices quoted are fair and reasonable and in proper ratio to the cost of the original work contracted for under competitive bidding; and,

The change in price and/or delivery date described is fair and reasonable and has been mutually agreed upon in full agreement and final settlement of all claims arising out of this modification including all claims for delays and disruptions resulting from, caused by, or incident to such modifications and change orders.

RECOMMENDED BY:
TIM BURMAN
COMMUNITY DEVELOPMENT DIRECTOR

By:_____
Tim Burman
Community Development Director

Date Signed:_____

RECOMMENDED BY:
_____
City's Representative

By: N/A_____
Printed Name:_____
Title:_____

Date Signed:_____

ACCEPTED BY:
BRIGHTLY SOFTWARE, INC.
Contractor

By:_____
Dan Graham, CFO

Date Signed:_____

RECOMMENDED BY:
_____
Engineer of Record

By:
N/A_____
__
Printed Name:
_____
Title:
_____
__

Date Signed:
_____

APPROVED BY:
CITY OF PORT ORANGE
Department Head—Approval delegated by City Manager. Scope, schedule and cost changes above either $25K or limit of unforeseen conditions allowance go to City Council.

By:_____
Tim Burman, Community Development Director

Date Signed:_____

City Manager—Approval authority for changes up to either $25K or limit of unforeseen conditions allowance. Scope and schedule changes sent to City Council.

By:_____
Wayne Clark, City Manager

Date Signed:_____

If Council approval is required:

By:_____
Printed Name: Don Burnette
Title: Mayor

Date Signed:_____

Affirmed:

_____
Robin L. Fenwick, MMC, City Clerk

Date Signed:_____

CITY OF PORT ORANGE PIGGYBACK AGREEMENT
for Goods and Services

Base Contract:

☐ **State of Florida**
☐ **Florida Sheriff's Association**
☐ **Sourcewell Formerly known as National Joint Powers Alliance ("NJPA")**
☐ **City/County of _____**
☒ **National IPA/TCPN/Region 4 Education Service Center ("Region 4 ESC")**

Department:	Community Development Department
Base Contract BID/RFP/RFSQ Number:	Region 4 ESC Contract #: R161802 pursuant to Solicitation 16-18
Alternate Source Contract Number: *(Used for State Contracts)*	N/A
Contractor Name:	Dude Solutions, Inc.
Contractor's Authorized Dealer:	N/A
Delivery/Installation/Product/Service Location:	1000 City Center Circle, Port Orange
Description:	Facilities Management Software and Solutions
Contract Initial Term/Term: *(check appropriate term and enter dates)*	Region 4 ESC: ☒ From: April 1, 2017 To: September 30, 2021 COPO: ☒Effective last date Agreement signed by Parties and shall continue until March 31, 2022
Contract Renewal Term: *(No. of Renewals and Term for each renewal)* ***All renewals shall be upon written agreement of the Parties, subject to review and approval of the City Manager and budget appropriation.***	Original Contract Term for a 3-year period with option to renew annually for an additional 2 years with Region 4 ESC agreement. Contract Renewal Year 1 renewed on 10/22/19 Contract Renewal Year 2 renewed on 10/20/20* *(**Language:** In the event of a conflict, the expiration in the Task Authorization shall control.)*
Authorization of Services: *(check one)*	☒ Written Purchase Order(s) ☐ Notice to Proceed(s) ☐ Task Authorization(s)
Amount of City Expenditure per Fiscal Year *(10/1 to 9/30)* or Annually *(Contract execution date and term)*:	☐ Fiscal Year Click here to enter text. ☐ Annually Click here to enter text. ☒ Appropriated Budget
Payment and Performance Bond *(Indicate if required)*	☐ Yes ☒ No
Exhibits Attached to Contract *(excluding legal Exhibits, if any)*	☒ **Exhibit "1"** Contract History, Definitions & Terms ☒ **Exhibit "2"** Cost/Quote ☒ **Exhibit "3"** Change Order Form ☒ **Exhibit "4"** Base Contract ☒ **Exhibit "5"** Terms of Use ☐ **Exhibit "6"** Insurance

Contract Administrator:	Tim Burman, Community Development Director	
Contractor's Authorized Agent Name Printed [1]:	Dan Graham, CFO	
For purposes of this Agreement, notices shall be sent to the principal address of the City and Contractor, as provided in this Agreement. Any notice or other communication given under this Agreement will be in writing and delivered by hand, sent by facsimile (provided acknowledgment of receipt thereof is delivered to the sender), sent by certified, registered mail, or sent by any nationally recognized overnight courier service to the address provided herein. The Parties may, from time to time and at any time, change their respective addresses and each will have the right to specify as its address any other address by at least 10 days' written notice to the other party.		
Contractor's Complete Contact Information:	Corporate Address: 11000 Regency Parkway Suite 400 Cary, North Carolina 27518	Telephone: (919) 816-8237 Fax: E-Mail: contracts@dudesolutions.com
Signature: Contractor's Authorized Agent [1]:		**Date:** 1/6/2021

Contractor Notary Acknowledgment Block:

STATE OF NC COUNTY OF WAKE

The foregoing instrument was acknowledged before me this 6 day of January, 2020, by Dan Graham, as CFO of Dude Solutions, Inc., a Delaware corporation and who:

[Notary: Please select one]
☐ is personally known to me; or
☑ has produced driver's license as identification.

KIM MARIE RICHTER
NOTARY PUBLIC
WAKE COUNTY
NORTH CAROLINA
MY COMMISSION EXPIRES 7/24/2021

Notary Public Signature
Printed, typed or stamped name, commission and expiration:

Department Head Signature Acknowledges the following: *The base contract referenced above for piggybacking by the City of Port Orange has been verified to be competitively bid with multiple proposals from vendors/contractors within two years from the date of this piggyback agreement, unless waived by the City Manager in writing or at the direction of City Council. The Department Head further acknowledges that the vendor package, all supporting vendor documentation, and the entire base contract, including but not limited to all exhibits, and all terms and conditions is uploaded for City record.*

Department Head Name, Title Printed:	Tim Burman, Community Development Director	
Signature: Department Head	Tim Bu	**Date:** 1-11-2021
Signature: Alan Rosen, Interim City Manager		**Date:** 1-11-2021
Attest: Robin L. Fenwick, MMC, City Clerk	Robin L. Fenwick	**Date:** 1/11/2021

[1] Each person signing this Agreement warrants that he or she is duly authorized to do so and to bind the respective party to the Agreement. If this Agreement is signed by an individual not identified in the records of the Florida Department of State, Division of Corporations, please provide written authorization for that individual to enter into agreements on behalf of said entity.

EXHIBIT "1"

Contract History, Definitions & Terms

Consisting of 2 Pages

Contract History

National IPA/TCPN/Region 4 Education Service Center ("Region 4 ESC") and Dude Solutions, Inc. ("Contractor") entered into contract R161802 for Facilities Management Software and Solutions ("Region 4 ESC Contract"), pursuant to Solicitation 16-18, and Omnia Partners Purchasing Agreement documents and Price List which can be located at: https://public.omniapartners.com/suppliers/dude-solutions/contract-documentation. The Region 4 ESC Contract has a three (3) year effective April 1, 2017 term, with an option to renew annually for an additional 2 years with Region 4 ESC agreement. Contract renewal year 1 was renewed on October 22, 2019, with the second and final year renewal renewed on October 20, 2020.

Defined Terms

1. ***City:*** City shall mean the City of Port Orange, a Florida municipal corporation, whose principal address is 1000 City Center Circle, Port Orange, Florida 32129.

2. ***Contractor:*** Contractor shall mean the person duly authorized to have an Agreement with the City to provide product and/or services as set forth in all Agreement documents.

3. ***Parties:*** Parties shall mean the City and Contractor collectively.

4. ***Base Contract:*** The original negotiated contract for goods and/or services that has been competitively bid and awarded, which extends the same pricing and terms of contract to the City.

5. ***Contract Administrator:*** Contract Administrator shall mean the person having the responsibility for the day-to-day administration of the Contract, Notice to Proceed(s) or written Purchas Order(s).

Terms and Conditions

1. The terms of the Base Contract for this Agreement and any exhibits attached hereto are incorporated herein by reference.

2. **In the event of any conflict between the Agreement, Signed Contract, RFP, Quote and Terms of Use, as attached, the following order of precedence will govern 1) This Agreement, 2) Signed Contract, 3) RFP, 4) Quote, and 5) Terms of Use, as attached. No amendments incorporated into the Agreement after execution will amend such Agreement, unless it specially states intent to do so and cites this section(s) amended. The order of precedence shall control when in conflict with provisions of any Laws or Regulations applicable to the performance.**

3. This Agreement and the documents incorporated herein by reference shall constitute the whole agreement between the Parties. There are no promises, terms, conditions, or obligations other than those contained herein, and this Agreement shall supersede all previous communications, representations, or agreements, written or verbal, between the Parties hereto.

4. *City Obligations*. In return for the services identified above, the City agrees to compensate Contractor at the prices set forth in Exhibit "2" attached hereto, subject to a limit not to exceed the budgeted amount for the fiscal year approved by the Port Orange City Council. All payments shall be paid upon receipt of invoice from Contractor in accordance with the Local Government Prompt Payment Act as set forth in Sections 218.70 through 218.79, Florida Statutes, as amended.

5. *Public Records Compliance*. If applicable, Contractor shall comply with public records laws as set forth in Chapter 119, Florida Statutes.

6. .*Certificate of Insurance*. Contractor shall provide to the City a certificate of insurance identifying the City of Port Orange as an additional insured, in accordance with the same insurance terms as provided in the Base Contract.

7. LIMITATION OF LIABILITY. THE MAXIMUM TOTAL LIABILITY OF ONE PARTY TO ANOTHER SHALL NOT EXCEED THE LESSER OF THE TOTAL AMOUNT OF ANNUAL FEES PAID BY CITY DURING THE PRIOR TWELVE (12) MONTHS IMMEDIATELY PRECEDING THE LOSS OR AN AMOUNT EQUAL TO THE LIMITATIONS SET FORTH IN SECTION 768.28, FLORIDA STATUTES. IN NO EVENT SHALL EITHER PARTY BE LIABLE TO THE OTHER OR ANY OF THEIR RESPECTIVE OFFICERS, DIRECTORS, AGENTS, ASSIGNS, OR EMPLOYEES, FOR ANY INCIDENTAL, INDIRECT, SPECIAL, CONSEQUENTIAL OR PUNITIVE DAMAGES ARISING OUT OF OR RELATED TO CLAIMS MADE UNDER OR PURSUANT TO THIS AGREEMENT EVEN IF THE PARTY OR PARTIES HAVE BEEN APPRISED OF THE LIKELIHOOD OF SUCH DAMAGES OCCURRING AND WHETHER SUCH LIABILITY IS BASED ON CONTRACT, TORT, STRICT LIABILITY OR PRODUCTS LIABILITY.

8. *Controlling Law*. **THIS AGREEMENT CONTAINS IMPORTANT MATTERS AFFECTING LEGAL RIGHTS AND IS ACCEPTED AND ENTERED INTO IN FLORIDA AND ANY QUESTION REGARDING ITS VALIDITY, CONSTRUCTION, ENFORCEMENT, OR PERFORMANCE SHALL BE GOVERNED BY FLORIDA LAW. ANY LEGAL PROCEEDING ARISING FROM OR IN ANY WAY REGARDING THE AGREEMENT SHALL HAVE ITS VENUE LOCATED EXCLUSIVELY IN THE CIRCUIT COURT OF VOLUSIA COUNTY, FLORIDA, AND THE PARTIES HEREBY EXPRESSLY CONSENT AND SUBMIT THEMSELVES TO THE PERSONAL JURISDICTION AND VENUE OF THE COURT.**

9. *Confidential Information*. Except as expressly permitted hereunder, each Party shall hold in confidence and not use or disclose any materials or information disclosed by the other Party during the term of this Agreement that are confidential or proprietary, including personal data of Customer's employees and personnel ("Personal Data"), or which may be reasonably regarded as the confidential information of such Party ("Confidential Information") consistent with Florida Public Records Law. Each Party shall treat the other Party's Confidential Information with at least the same degree of care it uses to prevent unauthorized disclosure or use of its own Confidential Information, but in no event less thana reasonable degree of care and in full compliance with the Florida Public Records Law and as otherwise governed by Florida Statutes. Confidential Information will not include any materials or information that the recipient can prove (i) is now, or later becomes, through no act or failure to act on the part of the receiving Party, generally known or available to the public; (ii) is known by the receiving Party at the time of

disclosure as evidenced by its records; (iii) is furnished to the receiving Party by a third party, as a matter of right and without restriction on disclosure; (iv) is independently developed by the receiving Party without any breach of this Agreement; or (v) is the subject of a written permission to disclose provided by the disclosing Party. The Parties are permitted to disclose Confidential Information in response to an enforceable order by a court or other governmental body, as otherwise required by law, or as necessary to establish the rights of either Party under this Agreement; provided, however, that the Party disclosing such Confidential Information shall provide prompt prior written notice to the other Party (except as prohibited by applicable law) to enable the other Party to seek a protective order or otherwise prevent such disclosure.

10. *Change Order Process*: Requests made by the Contract Administrator or Contractor to modify the scope of work, schedule of work, or costs, shall require a City of Port Orange Change Order Form executed by both Parties. No changes shall be made, and no Contract shall be formed between the Contractor and the City until the City executes the Change Order. For convenience, an example of the Change Order Form is attached hereto as Exhibit "3."

11. *Assignability of Contract*. Neither this contract, nor any part hereof, may be assigned by the Contractor to any other party without the express written approval of the City Manager, provided, however, that the Contractor shall have the right to assign this Agreement to the surviving entity in a merger or consolidation or to a purchaser of all or substantially all of its assets without the written consent of the City.

12. *Termination for Convenience of the City*

(a) In accordance with Appendix D, the parties agree that the City may terminate this Contract for any reason upon forty-five (45) days' prior written notice, and receive a prorated refund for their annual fees (does not include onetime training QuickStart fees) for the remaining months of unused services based upon the effective date of termination. In accordance with Appendix D, termination, in whole or in part, shall be effected by delivery of a Notice of Termination signed by the City Manager or his designee, mailed or delivered to the Contractor, and specifically setting forth the effective date of termination.

(b) As applicable, upon receipt of such Notice, the Contractor shall:

(i) cease any further deliveries or work due under this Contract, on the date, and to the extent, which may be specified in the Notice;

(ii) place no further orders with any subcontractors except as may be necessary to perform that portion of this Contract not subject to the Notice;

(iii) terminate all subcontracts except those made with respect to contract performance not subject to the Notice;

(iv) settle all outstanding liabilities and claims which may arise out of such termination, with the ratification of the Finance Director of Port Orange; and

(v) use best efforts to mitigate any damages which may be sustained by the Contractor as a consequence of termination under this clause.

(c) The Finance Director, with the approval of the City Manager, shall pay from the using department's budget, reasonable costs of termination, including a reasonable amount for profit on supplies or services delivered or work completed. In no event shall this amount be greater than the original contract price, reduced by any payments made prior to Notice of Termination, and further reduced by the price of the supplies not delivered or the services not provided. This Contract shall be amended accordingly, and the Contractor shall be paid the agreed amount.

(d) In the event that the parties cannot agree on the whole amount to be paid to the Contractor by reason of termination under this clause, the Finance Director shall pay the Contractor the amounts determined as follows, without duplicating any amounts which may have already been paid under the preceding paragraph of this clause:

(i) With respect to all Contract performance prior to the effective date of Notice of Termination, the total of:

(1) the cost of work performed, or supplies delivered;

(2) the cost of settling and paying any reasonable claims as provided in paragraph (c) (iv), above;

(3) a sum as profit on (a) determined by the Finance Director to be fair and reasonable.

(ii) The total sum to be paid under (i) above shall not exceed the contract price, as further reduced by the contract price of work or supplies not terminated.

.

[Remainder of this page intentionally left blank]

EXHIBIT "**2**"

Contractor's Revised Quote to be Provided

Consisting of 30 Pages

Software for Smarter Operations

PREPARED FOR
City Of Port Orange
1000 City Center Circle
Port Orange, FL 32129-4144

PREPARED BY
Dude Solutions, Inc.

PUBLISHED ON
November 23, 2020

This SOW has been defined to leverage DSI's experience, while optimizing the use of resources, thereby maximizing cost efficiencies on behalf of Client.

Based on our current understanding of the complexity and scope of this effort and the expected involvement of the DSI team resources, the current estimated Fixed Price for this engagement is shown in the Investment table. This estimated cost breakdown is as follows:

Pricing is based on:

- Omnia Partners Purchasing Agreement: https://public.omniapartners.com/suppliers/dude-solutions/contract-documentation (https://public.omniapartners.com/suppliers/dude-solutions/contract-documentation)
- Unlimited Users
- City Population of 64,000
- 160 hours of historical data entry
- Initial Term = Now to September 30, 2021

Solutions - Subscription	
SmartGov - Enterprise	
- SmartGov Permitting	
- SmartGov Code Enforcement	
- SmartGov Business License	
SmartGov Connector Financial	
SmartGov Connector Merchant	
SmartGov Connector Active Directory	
SmartGov Connector BlueBeam	
Subscription Term: 9 months 4 months included at no additional cost	**Subtotal:** $18,206.32

Implementation & Services	
Portal Configuration	
Parcel Connector Configuration	
Map Connector Configuration	
	Subtotal: $69,879.15

Department Types / General Configuration	
Fees Configuration (Pages)	
Financial Connector Configuration	
Merchant Connector Configuration	
Active Directory Connector Configuration	
Digital Mark-up Tool Connector Configuration	
Web-Based Training	
Data Migration	
Project Management	
	Subtotal: $69,879.15
Total Initial Investment	**$88,085.47 USD**

Pricing for the First Renewal Term is $43,694.00.

The above level of effort and associated pricing is based on the SMARTGOV package selected by City Of Port Orange and is subject to change based on defined client requirements that may be discovered during project delivery. Any identified project scope or requirements changes will be addressed via DSI Change Control Authorization ("CCA") process.

Introduction

Dude Solutions, Inc. ("DSI") is pleased to submit this Statement of Work ("SOW") to City Of Port Orange for SmartGov Professional Services. SmartGov streamlines permitting, planning/zoning, Inspections, code enforcement, and business licensing, providing efficiency for your jurisdiction and enhanced customer service for your citizens. The package City Of Port Orange has chosen for implementation of SmartGov will be implemented using proven processes and methodologies managed by an experienced project manager dedicated to delivering a successful project.

DSI looks forward to the opportunity to deliver these services and the ever-lasting development of a strong business partnership.

Definitions

In addition to the terms defined elsewhere in this SOW, the following terms have the following meanings:

"Change Control Authorization" or "CCA" means any request by the client to modify the scope of work, schedule, or costs will require preparation of a Change Control Authorization ("CCA" or "change order") form detailing the work to be performed, as well as the associated costs and schedule impact. Additional work will be performed only after both parties have duly executed the CCA. Scope of work changes will impact the project schedule which will be updated to reflect such changes upon CCA approval.

"Closing Phase" means the phase that represents the completion of a project where all metrics are finalized, all deliverables are complete and accepted by client, and all remaining billing/invoicing takes place prior to project closure and acceptance.

"Deliverable Acceptance Form" means the form that is a standard PMO form used for client to agree to accept a deliverable as complete and final.

"Escort" means the client provided resource/person to take Dude Solutions, Inc. ("DSI") resources around client facilities and provide access to restricted areas agreeable between client and DSI as needed.

"Executing Phase" means the phase of the project where deliverables are developed and completed.

"Fixed Price/Fixed Fee/Fixed Price Project" means the project pricing includes all services, tasks, and expenses associated with the client project.

"Monitoring and Controlling Phase" means the phase for measuring project progression and performance and ensuring that everything happening aligns with the project management plan.

"Onsite Services Completion" means onsite services have been completed and when necessary, the Deliverable Acceptance form will be used to document the completion of deliverables provided during the onsite services visit.

"Orientation Call" or "Project Kick-Off Call" means the call/meeting which begins the project and proper expectations are set between DSI and the client.

"Output Documents" standard or custom documents generated from SmartGov "e.g. permits, Certificates of Occupancy, violation letters, business licenses, receipts"

"Orientation Call Completion" means the Orientation Call or Project Kick-Off Call has been completed and the project has begun and proper expectations have been set between DSI and the client.

"Professional Services or Services" means professional, technical, consulting and/or other services.

"Project Completion" means the project completion occurs when all deliverables of the project have been completed and accepted by the client via the Project Completion Acceptance Form.

"Project Completion Acceptance Form" means the form that is a standard PMO form used for client to agree to accept a project as complete and final.

"Project Management Methodology" means the manner and process used to deliver services projects.

"Project Management Office" or "PMO" means the office that provides the oversight and standardized processes to consistently deliver projects in a concise, consistent, and standardized manner. The PMO manages and maintains the processes and standard templates utilized to manage DSI projects.

"SmartGov Modules" means the Permitting Module (permits for all departments), the code Enforcement Module, the Business Licensing Module, and the Recurring Inspection module.

"Software Component Configuration" means the components within the software have been configured per client specifications.

"Statement of Work Acceptance" means the signing and accepting of the terms of the Statement of Work document by client.

"Support Engagement" means the point in the project where implementation services end and product support begins.

"System Configuration Completion" means the configuration items within the software have been configured per client specifications.

"System Level Configuration Items" standard configurable items that are applied across departments and case templates.

"Training Completion" means the onsite or virtual training has been completed and when necessary, the Deliverable Acceptance form will be used to document the completion of deliverables provided for completion of the onsite or virtual training services.

"User Acceptance Testing – UAT" means that after the system is configured the client will have an opportunity to perform user level testing based on client developed test scripts. DSI will correct issues as documented and presented during this process.

Project Scope and Approach

Implementation Process Overview

In order to successfully implement the SmartGov application, DSI will work with City Of Port Orange to understand requirements necessary to configure and set up the SmartGov application to streamline processes related to permitting, planning/zoning, inspections, code enforcement and business licensing for your jurisdiction and citizens. Once the City Of Port Orange has reviewed, and approved these requirements and processes, DSI will configure and setup the application to support the City Of Port Orange's unique business rules.

Following the configuration and modeling work, DSI will train the City Of Port Orange's team using its jurisdiction-specific configuration. After training, DSI will work with City Of Port Orange to test the work performed and provide the necessary updates to successfully implement the solution. The system will then be ready to go live in production. If the City Of Port Orange purchases "Go-Live Support" packages, DSI will provide support for the period of time defined in the statement of work.

Customer Implementation Engagement Sessions ("CIES")

Client project team representatives and DSI project team representatives will dedicate time to meet in person or via teleconference to maintain communication and conduct coordination of project activities and tasks.

Deliverables

Dude Solutions will provide the following task deliverables:

- Project Management Meeting Schedule
- Data Migration and Technical Design Meeting Schedule
- Configuration Meeting Schedule
- Meeting notes or recordings for all scheduled meetings

The client will provide the following resources or task deliverables:

- A complete project team roster, including email addresses, phone numbers, and roles / titles
- Necessary communication / information to allow all project schedules to be finalized
- Timely response to task-related emails or phone calls to enable on-time completion of all assignments
- A minimum of 24-hour notice if all minimum required members for any scheduled meeting cannot attend the meeting. This will allow the meeting coordinator sufficient time to cancel or re-schedule the meeting as necessary

Assumptions and Constraints

- Initial proposed meeting plans from DSI will reflect the minimum recommended frequency, duration, participants (by job title or role), topics, and action items to address the full SOW
- Final meeting plan will be approved by the client key sponsor(s)
- Coordination and integration of the PM meeting, data migration, technical design meeting, and configuration meeting will align with the scope of the project, client organizational structure, and assigned resources
- The Client will provide dedicated knowledgeable technical resource available for questions

- The Client will provide a dedicated knowledgeable resource for mapping analysis
- The Client will provide read only access and screen shots for various permits/case types to provide context to DSI data migration specialists
- The Client will provide resources for validation throughout the process
- Client will provide side-by-side data entry for 2 weeks prior to go-live
- Response time for questions is one business day
- DSI may require up to 3 backups of data for each database throughout the process

Planning, Initial Set Up & System Level Configuration

Configuration begins with planning and analysis necessary to establish the overall configuration approach. After planning, and once the approach is documented and agreed to, DSI will set up the SmartGov environments to support implementation. DSI Consultants begin configuration with system level items or items that apply generally across all departments and types of configuration items.

Setup of environments to support SmartGov implementation and configuration of core items in each SmartGov module that are specific to City Of Port Orange 's requirements. These core items are defined/configured at the client level [i.e. these are configurable items that will be standard or shared across all departments and configuration types].

Deliverables

Dude Solutions will provide the following task deliverables:

- A Configuration Plan document that includes:
    - Identified current and future state business processes to be supported by the final product via the configuration work effort
    - Recommended approach to configuration that supports the identified business processes and activities
    - Configuration details for all permit, inspection, license, and code enforcement types to be configured in SmartGov. All templates required for creating the configuration types will be created in SmartGov based on requirements gathered in meetings with the client
- SmartGov Environments to support the implementation process including:
    - Configuration (Dude Solution access only for configuration)
    - Validation (client has access for testing, can be refreshed with configuration copy upon request)
    - Training
- Weekly configuration status reports (in PDF format) generated from the client specific configuration instance of SmartGov. These reports serve as the primary source to demonstrate core configuration elements, status, and needs
- Jurisdiction configuration, per Configuration Plan, to include as needed:
    - Parcel and/or address information management
    - Contact information management
    - Contractor license information management
    - Receipt/transaction information management
    - Inspection scheduling information management
    - Configurable screen display settings

- User configuration per Configuration Plan, to include as needed:
    - Individual User Rights
    - Available Departments
    - Available Distribution Groups
    - Available Inspection Qualifications
    - Available Security Groups
- Job configuration per Configuration Plan, to include as needed:
    - Default list of available queued jobs
    - Queued job parameters
- Administrative & shared configuration rules per Configuration Plan, to include as needed:
    - Administrative processing rules where available in the configurable Jurisdiction Values list
    - Standard status options for cases, submittal items, workflow steps, step actions, inspection types, inspection actions, accounts, and intervals
    - Standard expiration rules
    - Standard online processing rules [for the portal]
    - Standard reports available across all case types

Assumptions and Constraints

- The Configuration Plan will be based on information delivered to, or collected by, the DSI Consultant within a specified time frame established at the project kick-off
    - During the development of the Configuration Plan, the client provides representatives for all work units with work activity to be supported by the final delivered product
- Client will provide access to the appropriate leaders and/or subject matter experts to ensure meaningful engagement at all required meetings and to ensure on-time completion of assigned action items
- Client will provide access/links to any public, or private, web sites or operating systems, if needed, to gather complete business requirements
- The Configuration Plan can meet client requirements and can be fully executed within existing product design in all modules
- The Configuration instance will be solely owned by the DSI Implementation team and serves as the primary source for the final delivered product design
- The Validation instance will be sole source used by the client to complete all assigned configuration UAT tasks
- The Training instance will be used solely by members of the client project team to assist in understanding SmartGov functionality. It will contain default data sets and serves as a temporary "sand box" for assigned users.
- The client will designate one person on their project team to serve as the final decision-maker for all system level configuration elements. These are configured settings that are shared across SmartGov modules, and/or are settings common to all departments / divisions / users

- When configuration tasks, or related work effort, requires information to be submitted to the DSI Implementation team in a specific file format or within specified parameters, the client is able to comply with these stated requirements
    - Note: If the client cannot provide information in the DSI standard format, the assigned Project Manager will determine if a formal Change Request or additional contracted SOW is needed to provide assistance in developing or converting the information into the desired format

Module Case / Department Types

SmartGov implementation activities include the set up of case templates in one or more of these modules: Permitting, Licensing, Code Enforcement and Recurring Inspections. These case templates must be used to create records in SmartGov in each module. Your DSI Consultant will provide specific information about the minimum required elements to be configured for the case templates in each module; these required case template elements do vary by module.

Deliverables

Dude Solutions will provide the following task deliverables:

- Case template baseline elements, per the Configuration Plan, to include as needed:
    - Case record reference information
    - Template specific expiration, renewal or interval rules
    - Template specific default submittal list
    - Template specific details (custom attributes) that are required for any of the following: application intake, workflow step completion, inspection completion, fee calculation, or mandatory regulatory reporting
    - Template specific default workflow steps for Admin, Review, and Final work lists
    - Template specific default inspection list
    - Template specific list screens such as Bonds, Fixtures, Valuations, Violations, Citations, Lien, or Items
- Once baseline case template configuration is completed, any expanded configuration beyond baseline must be discussed during Configuration Meetings with the Consultant and approved by the assigned PM. Expanded configuration elements, if approved, may include
    - Non-essential custom attributes
    - Work step dependencies and due dates
    - Step actions and Inspection actions
    - Default Parent-Child case linkages
    - Workflow cycling feature
    - Template specific tab appearance
    - Standard note types and note codes
    - Standard condition types and conditions
    - Standard code references
    - Template specific report links

The client will provide the following resources or task deliverables:

- Specific lists of all types of applications, forms, or other documents that describe all services to be supported by SmartGov at the time of project "Go Live"
    - This list should be inclusive of all in-scope departments
    - This list should conform to requested formatting and scope instructions, as communicated by DSI

- A PDF or Word version of all customer-facing documents (forms, letters, cards, etc.) expected to be generated by SmartGov
- A publicly accessible URL, or electronic copies of reference information, that provide all pertinent state, county or local regulatory information that are known to impact business operations to be supported by SmartGov
- A fully approved version of the template validation workbook
- Approval via email or other written correspondence of any other identified forms, as requested by the Consultant

Assumptions and Constraints

- The scoped number of department templates for this SOW are 58 types. If the number of department types identified during the configuration work effort exceed the number of types scoped for this SOW, the additional types may be introduced into the scope of the project via the DSI CCA process once signed and approved by the DSI Project Manager and the client Project Manager.
- Case template configuration will be completed within existing product design in each module.
- DSI will configure each application or request type in the SmartGov module that best supports the associated workflow. The primary goal of configuration of case templates is to optimize SmartGov capability
    - Note: This assumption means that recommended case template configuration may or may not align with current internal customer naming convention or legacy system design

- The total number of case templates to be configured across all modules will be stated in the Configuration Plan. This total may vary from the initial sales order, where applicable, if approved by the DSI Project Manager
- A complete list of case templates to be configured across all modules will be approved by the client key sponsor, or their delegate, no later than the third Configuration Meeting
- Baseline configuration for case templates identified in the Configuration Plan will be completed before any expanded template configuration work will be done
- Baseline configuration for case templates listed in the Configuration Plan will support the end-to-end work steps that correspond to each default SmartGov Process State in the applicable module.
- If case templates or department types are identified during the configuration work effort, that are not documented in the original Configuration Plan or exceed the number of types scoped for this SOW, the additional templates or types may be introduced into the scope of the project via the DSI CCA process once signed and approved by the DSI Project Manager and the client Project Manager.
- Super Admin training will include how to maintain or update case templates

Financial Setup and Fees Pages

Configuration of GL Accounts and Fee Codes as needed to support financial transactions for any business activity to be supported by SmartGov.

Deliverables

Dude Solutions will provide the following task deliverables:

- A weekly Fee List Report that reflects all configured active fees and their associated GL Accounts
- Configuration of permitting module fee codes necessary to support all configured case templates
- Configuration of Licensing module fee codes necessary to support all configured case templates
- Configuration of Code Enforcement module fee codes necessary to support all configured case templates
- Configuration of Recurring Inspection module fee codes necessary to support all configured case templates
- Configuration of other fee codes required to support routine transaction activity including NSF ("Non-Sufficient Funds") fees, administrative fees, fines, regulated surcharges, convenience fees, and the like
- Configuration of fast track fees, deferred fees, and tax exempt fees within current product design.
- Configuration of the timing during the workflow process that each fee will be assessed and may have payment applied against the fee within current product design
- Configuration elements as needed to support online [SmartGov portal] payments
- Setup and definition of Fees Pages

The client will provide the following resources or task deliverables:

- A copy of all current fee schedules for all in-scope departments and business functions
- A current list of GL Accounts
- The last two monthly or quarterly relative financial reports
- A copy of any other operating document that contains pertinent information regarding any assessed charges, surcharges, potential fines, etc
- Contact information for one or more subject matter experts in the appropriate finance departments. This is to facilitate efficient information gathering from both operating and finance departments / divisions

Assumptions and Constraints

- All fee codes will be configured within existing product design
- A GL Account list approved / authorized by the client's finance department is provided to the DSI Consultant. This GL Account list will be limited to accounts associated to fee codes to be configured in SmartGov
- GL Accounts and Fee Codes will be configured with product design parameters
- All configured fee codes will be derived from documented fee schedules or comparable client documentation provided to the DSI Consultant. Updated fee schedules or related documents that are provided after the initial versions may be incorporated into the final configuration if there is no adverse impact on the project schedule
- Fee codes will be configured to optimize SmartGov capability, and therefore may not be identical to legacy system fees
- Determination of the specific fee codes to be defaulted within each module case template will be determined by the designated client project team member
- Validation of case templates will include validation of fee code functionality
- User security rights will address fee code management within current product capability
- Super Admin training will include instructions for maintenance of GL Accounts and configured fee codes

Portal Configuration Setup

Configuration of required elements to enable in-scope functionality associated with the SmartGov online portal, as stated in the Configuration Plan.

Deliverables

Dude Solutions will provide the following task deliverables:

- A Portal Validation site to demonstrate and test Portal configuration
- Information regarding Portal set up options
- A Portal set up workbook template

The client will provide the following resources or task deliverables:

- A fully completed and approved Portal Set up workbook
- Any written content to be visible in portal that is not configurable
- Resources to test Portal configuration

Assumptions and Constraints

- The client will be responsible for taking steps to integrate the SmartGov portal into existing online sites
- Online payments will not be enabled without also purchasing the Merchant Services connector
- The client will be able to determine the level of online integration with their business processes, within existing product design
- Portal configuration will occur along with configuration of module case templates.
- Validation tasks will include distinct tasks to approve Portal set up
- Portal user security will be defined using existing product functionality
- Super Admin training will include information about options for the client to maintain / update portal configuration

Parcel Connector Setup

The parcel connector is an optional feature that is used to keep the parcel repository in SmartGov up to date. Parcel data that is typically maintained in a county assessor's system is used as the primary reference for modules in the SmartGov application. Parcel profile information, such as Parcel Number, Site Addresses, Current Owner, Legal Description, Section, Township, Range, Quarter, Subdivision, Block, Lot, and Neighborhood, is accommodated in standard data fields. Additional attribute data may also be stored in our custom detail area. Additionally, if the associated latitude and longitude data is available, those coordinates can be added to the parcel record to allow users to geographically locate information on the map.

Deliverables

Dude Solutions will provide the following task deliverables:

- A tested, working parcel connector along with a list of unresolvable errors to be addressed

Assumptions and Constraints

- Parcel Connector required fields supplied

Map (GIS) Connector Setup

The Map (GIS) connector allows for the display and viewing of a geographical map based on parcel data provided in SmartGov. The Map (GIS) connector will display layers on the SmartGov map based on the clients current Geo-database.

Deliverables

- Map layers configured and available for display on the SmartGov map
- Parcel layer registered in SmartGov for use with SmartGov popup
- Ability to turn layers on and off
- Training to configure layers going forward

Assumptions and Constraints

- Client will provide URL to ArcGIS REST Service with layers for SmartGov to consume and display on the map
- Layers are required to be hosted on an ESRI server
- Layers must be available via HTTPS
- Server must have valid security certificate issued by a digital certificate authority (not self-signed)
- Layer formats supported:
    - Map Services
    - Feature Services
    - Tiled Services
    - Web Map Service (WMS)

Financial Connector Setup

The receipt extract for the Financial Connector is a job process that allows SmartGov to export data in electronic file format that can then be imported into an external financial management system ("FMS"). The purpose of receipt extract is to automate the export process and allows users to update their preferred FMS with the selected receipt data generated in SmartGov. The extract is provided in a comma delimited file format that is run as an on-demand job within the SmartGov application. The file format and export settings are fully customizable depending on the needs of the client FMS. These export setting will be defined early on during the planning phase, so all stakeholders have a clear understanding on the type of data that needs to be included in the extract file.

Deliverables

- Financial Reports with summary and detail information processed in the system:
- Receipt detail
- Reconciliation Reports
- Financial reports for daily extract validation

Assumptions and Constraints

- Client will provide Financial Management System ("FMS") data access for extracts
- Client to provide list of data elements for the connector integration
- FMS data will be extracted into a .txt file for SmartGov consumption

- Extract jobs can be scheduled or run manually

Merchant Service Connector Setup

SmartGov's public portal can be configured to interface with 3rd party payment gateways to accept credit card transactions. SmartGov does not store any credit card information or other sensitive information relating to credit card transactions processed via the portal. Most payment gateway providers will transition the user from the SmartGov site to their own secure site in order to complete the transaction before redirecting the user back to SmartGov. This allows the payment gateway provider to maintain the secure information and pass only necessary information, such as a confirmation or transaction reports, to SmartGov.

The first step to implement the connector is for DSI to build the interface between SmartGov and the selected payment provider. If the provider is new, DSI will first need to build the technical backend process to enable electronic transactions to/from SmartGov. Once the initial backend setup is complete, SmartGov can be configured to process payments.

Each payment gateway provider has different sets of specifications that they require to be sent to their system to authenticate payment information. When DSI builds a connector to a payment gateway provider, a new option will become available in the Payment Vendor drop down menu on the Administration Portal Payment Configuration page. If a payment gateway provider does not have a connector to SmartGov, no option will be available in the drop down menu. The payment gateway provider should provide the necessary information to the Jurisdiction in order to complete the setup process. Administrators may be asked to provide additional URLs to SmartGov pages for navigation purposes.

Deliverables

- Configure the Merchant Service connector to process payments for client services and transactions processed in SmartGov
- Configure the 3rd party payment gateway to accept credit card transactions

Assumptions and Constraints

- SmartGov does not store any credit card information or other sensitive information relating to credit card transactions processed via the portal
- Merchant Services Gateway Payment Provider Partners include:
    - ACI Universal (Official Payments) – Integrated Level 1 Payment Process - Postback v2.4
    - Authorize.NET Service Integration method (SIM)
    - BridgePay
    - ETS Corporation – Hosted E-Com Payment Page Service v1.50<
    - First Data Global Gateway Connect v1.3
    - First Data Global Gateway E4
    - FISGlobal – PayDirect Web
    - GovPay
    - PACE Technology Engine
    - PayPal – Pay Flow Pro
    - Point & Pay – Parameter Passing v3.0
    - PayGov
    - Paymentus

- Reliant Pay
- TransFirst
- US Bank – E-Payment Service v12.1 (Elavon)
- Wells Fargo
- XpressBillPay

Digital Markup Tool Setup

Configuration to support electronic plan review utilizing Bluebeam Prime Studio.

Deliverables

- Enable the Bluebeam connector
- Configure selected permit types to allow electronic plan review
- Configure specified submittal requirements for the electronic plan review process
- Instruction on the configuration and use of the Bluebeam integration

Assumptions and Constraints

- Electronic plan review is only available in the Permitting module
- Only .PDF files are eligible for electronic plan review
- Training in the use of Bluebeam software will not be included
- Client is responsible for purchasing the necessary Bluebeam components as outlined below:
    1. A subscription to BlueBeam Studio Prime and;
    2. BlueBeam ReVu client software for each user. The following editions of the most current Bluebeam version are supported:
        - Standard
        - eXtreme
        - CAD

Data Migration

Data Migration can be a complex process and demands that solid requirements are well defined in order to prepare for the data migration process. Many clients start out with "we want everything" migrated to SmartGov. However, experience has shown that once the requirements of data to be utilized in SmartGov have been reviewed, this often reduces the need for all information in legacy systems. Dude Solutions will help the client determine the real needs for data to be migrated from the legacy system to SmartGov. Decisions will be made jointly via a thorough analysis of the legacy system data and how or if the legacy data should be targeted to be migrated to SmartGov.

The consulting team will ask a series of questions, such as:

- What is the reason you want to migrate your data?
- What are your public data request requirements?

- What is the required retention period?
- What elements are required to meet the need? Once determined, this can expand or lessen the scope to include or eliminate other data points that need to be tracked moving forward
- Are legacy systems still available to extract data from?
- Do you need to report on this data?
- Do you need to be able to search for this data? What is the Search criteria? These questions will help us determine where to store data within SmartGov

The data migration process will include the following steps:

1. Define requirements
2. Map data elements
3. Extract data
4. Transform data
5. Load data
6. Perform data validation with client
7. Resolve data issues
8. Validate resolution
9. Obtain fresh copy of data
10. Add migrated data to configuration
11. Validate data and system configuration
12. Perform end to end testing
13. Perform final data migration
14. Move to Production/Training environments
15. Migration sign-off

Deliverables

- Dataset assessment and set priorities with client
- Evaluate data quality
- Work with client to cleanse data prior to extract
- Map data elements
- Determine migration pre-requisites and sequencing

- Define migration approach based on requirements definition
- Create and execute validation checklists

Assumptions and Constraints

- Client will provide information related to:
  - Data Source
  - Database/Source Type (SQL Server, Access, Oracle, etc...)
  - Type of Data (tabular, documents, permits, financial, etc...)
  - Active data usage
  - Point of Contact who know the data structure and content usage
  - Provide data validation and testing resources

Standard Reports (70 Reports Included)

DSI will provide the client reports (reports and output documents) that includes 70 standard reports. Normal modifications to these reports to entail updating client specific information and logos not related to data output.

- Custom Reports: SmartGov comes with 70 standard reports and output documents. Using tools in SmartGov, client staff can add the client's logo and modify header and footer information.

Deliverables

- 70 standard reports
- Edits will be made to add client specific logo and information i.e. company name, address, phone

Assumption and Constraints

- Modification to standard reports will be related to Client branding and logos

Post Go-Live Support

DSI will provide the client with "Post Go-Live Support" which includes additional training, configuration support, reporting assistance, transaction based support, and work with the client on basic production related issues or questions for utilizing the system.

Deliverables

Provide production related post go-live support for 30 days after go-live date.

Assumptions and Constraints

- System configuration and all implementation tasks have been completed and client is using the SmartGov system in production

User Acceptance Testing "UAT"

DSI will work with the client to conduct User Acceptance Testing ("UAT") upon the completion of configuration and development tasks to confirm SmartGov functionality using the client's UAT Test scripts, developed by the client. The client will execute their test scripts and communicate the results of the test scenario as either pass or fail. DSI will review the UAT test log for issues and will assign these issues to the appropriate resource for resolution. DSI will have up to ten (10) days to correct any functional item that fails a test, or provide a mutually acceptable written explanation of when the failed item will be corrected. In the event a bug is identified, the bug issue will be assigned to the DSI Engineering Team for assessment. DSI Engineering will then provide an estimated time frame for resolution. The client has the right to conduct additional UAT Testing for items within project scope.

Deliverables

DSI will provide the following task deliverables

- SmartGov Validation environment ready for system User Acceptance Testing
- Review any discrepancies found by the client during UAT Testing
- Correct any functional item that fails a test within 10 days, or provide a mutually acceptable written explanation of when DSI will correct the failed item
- Identified software bugs will be addressed by DSI Engineering for assessment. DSI Engineering will then provide an estimated time frame for resolution
- Provide tools for documenting UAT test scripts in the UAT testing Plan and issue tracking log as needed, client may use their own UAT Testing Plan document if available

The client will provide the following resources or task deliverables

- Create a User Acceptance Test Plan with scenario based test scripts to include end-to-end system and client business process functionality, system workflow, system configuration, data migration, interfaces, reports, etc
- Execute UAT Testing Plan
- Track and document test results
- Written acceptance of System User Acceptance Testing complete via the DSI Deliverable Acceptance Form

Assumptions and Constraints

- The client will develop a UAT Test Plan
- The client will provide resources for User Acceptance Testing throughout the process
- The client will track and document test results in a mutually agreed format
- DSI will provide resources to address discrepancies

Upon successful completion of UAT Testing, Client will sign a DSI Deliverable Acceptance form, provided by the DSI Project Manager, to document their acceptance of UAT Testing and acknowledgement that UAT Testing has been completed successfully

Project Management / Engagement Management

The Project Manager's primary goal is to deliver the project within defined constraints through planning, scheduling, and controlling those activities required to achieve the project's objectives and meet customer expectations. The Project Manager strives to deliver on schedule, within budget, within scope, and at the desired performance level.

DSI assigns a professional Project Manager and/or a professional Engagement Manager for every consulting engagement. DSI's Project Management Office ("PMO") and Project Management Methodology provides Project Managers with a formal framework that is used in initiating, planning, managing (executing, monitoring, and controlling), and closing DSI's customer projects. DSI's Project Manager will have the primary responsibility for coordinating all activities for this SOW including scheduling resources, confirming project activities and that all project deliverable and defined activities are executed within the scope of this SOW. DSI's Project Manager will serve as the single point of contact for the project related to this SOW.

DSI's Project Management Methodology provides a defined set of phases and deliverables per Project Management Institute Best Practices which include a series of planning phase activities, including initial alignment meetings to prepare for the kickoff meeting to enable all project participants to understand the project scope, project plan, and objectives. The project kickoff meeting will allow all participants to be introduced, review and understand the delivery methodology, define team roles and responsibilities, review the communications and risk management plans, review documentation templates, review the SOW and project schedule. The Executing phase allows DSI Project Managers to direct and manage project progress through task execution, distribute project related information per the Communications plan, Quality Assurance per the SOW guidelines, project team development and coaching, and checkpoint meetings to review project progress during each work week, and weekly status meetings. The Monitoring and Controlling phase provides the DSI PM with the toolset to manage the triple constraint triangle of scope, cost, and schedule through integrated change control, quality assurance, deliverable validation, risk monitoring and control, performance monitoring to plan and schedule, and initiating corrective action measures. In the Closing phase, the Project Manager will verify product and deliverable acceptance, perform final financial audits, lessons learned, project archive delivery and updates, and formal project completion acceptance from the customer.

Project Management activities include:

- Project planning and kickoff meetings
- Project schedule developed per SOW tasks, deliverables, and resource assignments
- Status reporting and status meeting
- Continuously communicating, planning, and scheduling updates
- Schedule and budget monitoring, and scope management
- Risk Management planning to continuously identify, analyze, and mitigate risks
- Action Item and decision tracking, as well as resolving and escalating issues
- Quality Control
- Change control management
- DSI project resource management
- Work product completion and deliverable acceptance management
- Project Completion Acceptance execution

Project Timeline

DSI anticipates commencing this project on a mutually agreeable start date upon receipt of an executed SOW acceptance page ("Acceptance") found at the conclusion of this document. Within two weeks of the Orientation Call, the DSI Project Manager will schedule a mutually agreeable date and time for the project kick-off meeting. As a deliverable of the kick-off meeting, the DSI Project Manager will develop a project schedule to be shared with the clients' project manager for review and agreement. As a deliverable of the kick-off meeting, the DSI Project Manager will develop a project schedule to be shared with the clients' project manager for review and agreement.

The following generic process will be followed for the implementation of this project. Below is a depiction of the generic process the DSI Project Manager/Engagement Manager will follow for the implementation, DSI reserves the right to modify this process to reflect the scope of this project.

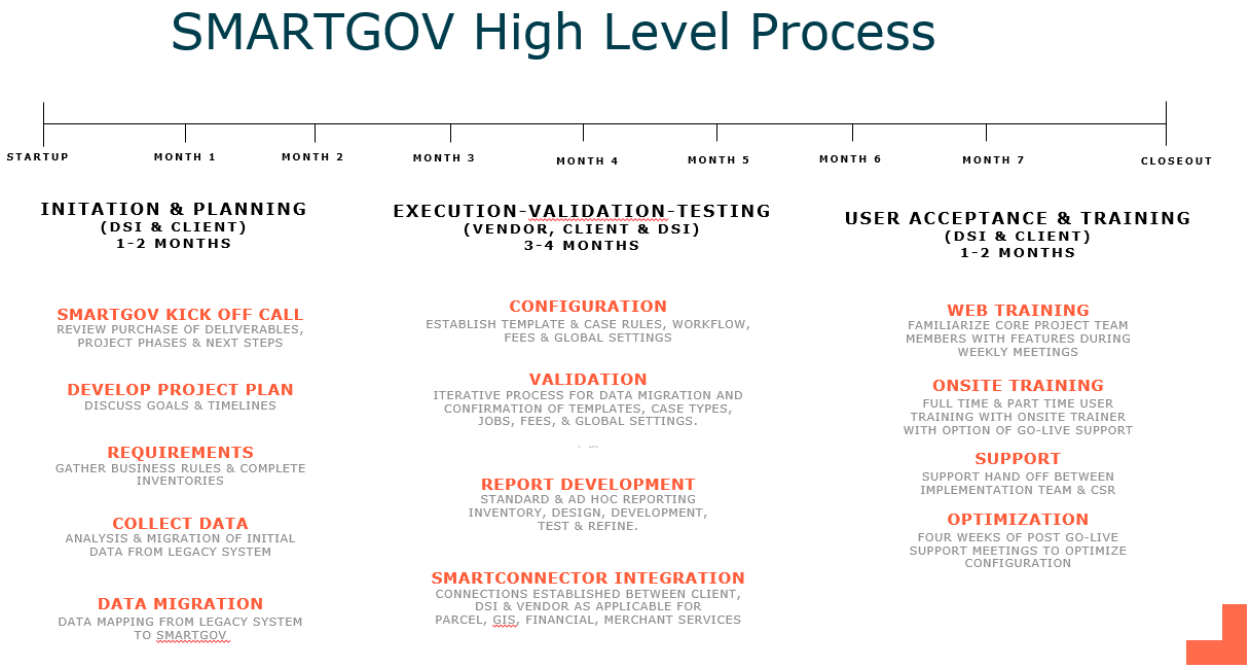

Professional Services Invoicing / Billing

Invoicing Terms

DSI will generate project invoices when the above product codes are completed for the value of the product code as shown in the Investment table.

Travel Expenses

Travel expenses are inclusive in Dude Solutions pricing for your project.

DSI understands there are extenuating circumstances that require a change in scheduling. DSI will make every attempt to accommodate cancellation/rescheduling requests on an as-needed basis. Rescheduling requests will be subject to resource availability and every attempt will be made to meet requested timeframes and timelines, however, no guarantee can be made for requested dates or times. Client accepts that DSI will reschedule based upon our resources' next availability that meets the project duration requirement to complete the scope of work.

Cancellation Policy

Cancellation and Rescheduling requests will be managed per the below policy:

Cancellation/Rescheduling Fees: In the event that the Client requests to reschedule their onsite work date(s), Client must reschedule 14 days in advance of the scheduled onsite work. Any requests for rescheduling onsite work within the 14-day window prior to the scheduled onsite date, will require the Client to reimburse DSI the full cost of any **Cancellation Fees** and **Re-booking Fees** incurred.

Definitions:

- **Cancellation Fees:** Any actual fees incurred by DSI from its travel providers which are the result of the Client canceling work for scheduled date(s) which are not immediately rescheduled, including, but not limited to fees charged for airfare, train, rental car, and hotel.
- **Re-booking Fees:** Any change fees associated with changing travel arrangements to accommodate a rescheduled date requested by Client including, but not limited to, any difference in reasonable travel costs (airfare increase, hotel increase, rental car increase) incurred when re-booking for requested dates.
- **Force Majeure:** Client will not be held liable for Cancellation or Re-booking Fees incurred by DSI as a result of an act of God, such as an earthquake, hurricane, tornado, flooding, winter super storm, winter weather that shuts down a facility, or other natural disaster, or in the case of war, action of foreign enemies, terrorist activities, labor dispute or strike, government sanction, blockage, embargo, or failure of electrical service within a facility's power grid.

DSI Project Team Roles and Responsibilities

The roles listed below comprise the DSI team supporting this project. The team brings a wealth of experience and knowledge that will provide you with the highest caliber of expertise, thought leadership, and project management. *Due to the size and scope of the project, one person may play multiple roles, to be determined by* DSI *as appropriate.*

- **Senior Implementation Consultant:** The Senior Technical Consultant ("STC") will develop and deploy the solution and ensure that it meets the business requirements for the project. The STC's goal is to deliver a responsive system that complies with the functional specification. The STC defines, designs, and implements the features or products that meet the client's functional expectations.

- **Implementation Consultant:** The Implementation Consultants ("IS") primary role is to provide project implementation support by setting up a client's account, performing system configuration as defined in the scope of the project, creating/modifying templates as defined in the scope of the project, and creating or modifying standard or custom reports as defined in the scope of the project or requirements discovered during requirements gathering sessions.
- **Project Manager / Engagement Manager:** The Project Manager's ("Project Manager" or "PM") / Engagement Manager's ("Engagement Manager" or "EM") primary role is to deliver the project within the project's defined constraints through planning, scheduling, monitoring progress, controlling scope, and managing client expectations. The PM/EM manages the process to release the correct product on schedule and within budget.

Project Assumptions and Constraints

DSI has made the following general assumptions in this SOW to derive the estimated cost for this project. It is the responsibility of City Of Port Orange to validate these assumptions and responsibilities before signing the Acceptance. Deviations from these assumptions may impact DSI's ability to successfully complete the project and will be addressed via a CCA process, as appropriate. Any changes in scope, schedule, or costs will be documented via the CCA process, whether there is a cost impact or not. Zero dollar CCA's will be used as mutual agreement documentation for scope and schedule changes.

Project Assumptions

- Client business stakeholders must be available for onsite visits and working phone conversations.
- DSI resources will be onsite as planned and scheduled.
- Prerequisite data gathering, related to an orientation call or requirements gathering session onsite, must be completed prior to scheduled onsite or orientation call date in order to maximize onsite consulting time and resource productivity.
- DSI is not responsible for delays caused by missing data or other configuration information that is required to be available prior to the onsite visit. Having the requested data and configuration information available prior to the onsite visit may minimize delays so progress can be made quickly.
- Regarding requested enhancements or new feature development, the request will be fully documented and delivered to the DSI software engineering team for review for product inclusion, definition, development, prioritization, and sprint release development and confirmation.

General, Administrative, and Cost

- DSI must be in receipt of this SOW, signed by an authorized Client representative, prior to initiation of services including orientation calls or onsite visits.
- As applicable, designated deliverables must be approved in writing using the *DSI Deliverable Acceptance form*.

- Upon satisfactory completion of project, Client must provide project sign-off using the *DSI Project Completion Acceptance form*.
- DSI is not responsible for delays caused by Client, its contractors, or any third party vendors or third party service providers.
- All project documentation will be prepared in DSI standard format in Microsoft Word, Excel, PowerPoint, Project, Visio, and/or PDF.
- This document could include technical inaccuracies and/or typographical errors.
- **Any request** by City Of Port Orange to modify the scope of work, schedule, or costs will require preparation of a CCA form detailing the work to be performed, as well as the associated costs. Additional work will be performed only after both parties have duly executed the CCA. Scope of work changes will impact the project schedule which will be updated to reflect such changes upon CCA approval.
- All on-site work will be conducted at Client's physical location. As required, appropriate Client personnel will be made available either at that location or via alternate means (e.g., conference call) for in-person meetings, tours, and ad-hoc meetings with appropriate personnel for additional fact finding, data gathering, and reiteration demos.

Client's Support

- Client will provide the needed input, resources, and documentation to support the tasks contained herein.
- Client will assign a project manager/leader to coordinate activities, reviews, and the collection of information in support of this project and to act as a point of contact.
- Client team members will be identified and be part of the decision-making process as it relates to changes in process, applications, technology, etc.
- Client will provide assistance in the development of functional requirements and will confirm those requirements meet the project's overall business objective.
- Client business and technical staff must be available for team workshops, requirements gathering, data gathering, and/or consulting sessions.
- Client will be responsible for scheduling and coordinating all meetings and interviews involving other teams, departments, jurisdictions, management teams, or other necessary resources required for the success of this project.
- Client will provide access to resources in a manner consistent with the proposed schedule and provide suitable designees in the absence of required resources.
- Client will provide adequate working facilities (i.e., desk, computer, telephone, contractor identification, access badge, parking pass, etc.) for DSI to perform any portion of this project that must be conducted at Client's facility and access to all applicable software, databases, tools, and systems at their facilities.
- Client will ensure that the consultant(s) are granted access to the facilities and/or systems required to conduct the necessary work defined in this SOW.

- Client will provide a knowledgeable Escort for data gathering, requirements gathering, tours, and access to restricted personnel as necessary.
- A minimum of 24-hour notice if all minimum required members for any scheduled meeting cannot attend the meeting. This will allow the meeting coordinator sufficient time to cancel or re-schedule the meeting.
- Advance notice if there is to be any additional incurred travel expenses above and beyond the contract. DSI will confirm approval of all travel dates and expenses in email from the appropriate project sponsors prior to being on site.

Client Engagement Responsibilities

The below table demonstrates the anticipated client engagement responsibilities and level of effort involvement to ensure the success of the project.

Role	Time (% FTE)	Responsibilities
Implementation Project Lead	30-40%	• Serve as primary Person of Contact • Work with Dude PM to plan and schedule client resources • Manage the scope of the paid services in SOW • Coordinate Client staff assignments • Manage Client activities to meet schedule commitments • Mitigate all implementation risks • Define requirement/layouts of reports purchased • Identify requirements for any connectors purchased • Sign-off on completion of all implementation services delivered
Subject Matter Experts (Multiple)	40-60%	• Attend Implementation/configuration meetings • Define and provide input into configuration • Attend User Acceptance and validation Training • Validate data and configuration • Develop UAT Test Scripts

IT Lead	5-10%	• Manage infrastructure changes to support SmartGov • Provide the data to be migrated from systems • Mitigate any technical issues • Coordinate technical assignments required to implement • SMARTConnectors, including GIS and parcel data
Data Validator / UAT Testing	20-30%	• Validate all data migrated • Comprehend the data in the prior system and how it translates to Community Development • Verify the data that was validated • Participate in UAT Testing, execute test scripts and provide feedback
System Administrator	10-15%	• Manage SmartGov Configuration • Create user accounts • Handle user access/privileges • Reset passwords • Supervise organization information changes • Regulate system values • Customize attributes • Generate ad hoc reports • Support internal usage of SmartGov
Training Coordinator	10%	• Manage data within SmartGov, specifically: • Accreditations • Task lists • Training Tracks • Assessments • Training Items • Training Location (conference room, off-site, etc.)
User	Case-by-Case	• Participate in SmartGov training • Participate in UAT Testing, execute Test Scripts

Change Control Authorization Process

In order to maintain a positive relationship with our clients and to complete all services and deliverables of a project on a timely basis, all facets of the project must be agreed upon, and any changes to the project must be requested and evaluated for impacts. Change control is an essential mechanism to monitor and document all project changes and deviations from the original scope and objectives of the project. All project changes must be requested via the project CCA process. The basic steps for a change are:

- The client team or DSI team discovers a need to change the project.
- The authorized client project manager or DSI Project Manager is notified and a CCA is initiated.
- The written project change request is reviewed by all necessary parties and either accepted or rejected.
- If rejected, the change request is maintained in the project file for reference purposes.
- If the written change request is accepted, then:
    - All necessary signatures are recorded on the change request
    - All affected documentation is revised to reflect the change(s)
    - Any adjustments to schedule, scope, and/or cost are made to the overall project plan
    - Signatures are required for all change requests
- Copies of the official approved and signed CCA are forwarded to the customer project manager and DSI Project Manager for the documentation archive. DSI will forward a copy to the Project Accounting Team in the office to update the project information and budget (if necessary).

Change Control Authorizations Process Steps

Step	Type	Description
1	Request	A request is made for a change to the agreed upon scope baseline. The request may be internally or externally generated, must be formally written and communicated to the project manager, and may have been prompted by any number of reasons or events.
2	Evaluate	The project manager facilitates an evaluation to confirm that the requested change is in fact a change to the agreed upon scope baseline. If so, the project manager implements the request as described below.
3	Assess	If the request is in fact a change to the scope baseline, the project manager assesses the impact on project schedule, budget and work products, using a similar approach as the original project planning process, utilizing team member expertise as needed.

4	Document	The project manager documents the project impact and other critical information in a CCA form. A summary of the change is recorded in a change order log. This log is required, and is a very useful tracking tool, and is included in the project status report.
5	Decide	The change order is presented to the project's governing authority, typically a steering committee, stakeholder's, or equivalent. In some cases, the project may have a separate change management board to process change requests. The governing authority decides whether or not to implement the change, and obtains approval for any needed additional resources (if it does not itself have the authority to authorize resource changes).
6	Incorporate	The project manager incorporates changes into the project's scope baseline in the form of such artifacts as contracts, statements of work, project plans, requirements and design documents per the approved CCA document.
7	Implement	The project team implements the changes.

Proposal terms

- Proposal has been prepared for City Of Port Orange ("Subscriber")
- Proposal expires on December 31, 2020
- Initial Term: 9 months

Order Form terms

- This Order Form and its Services are governed by the terms of the Dude Solutions, Inc. Subscription Agreement found at https://www.dudesolutions.com/terms (https://www.dudesolutions.com/terms) ("Terms"), unless Subscriber has a separate written agreement executed by Dude Solutions, Inc. ("DSI") for the Services, in which case the separate written agreement will govern. Acceptance is expressly limited to these Terms. Any additional or different terms proposed by Subscriber (including, without limitation, any terms contained in any Subscriber purchase order) are objected to and rejected and will be deemed a material alteration hereof.
- Acceptance of this Order Form on behalf of a company or legal entity represents that you have authority to bind such entity and its affiliates to the order, terms and conditions herein. If you do not have such authority, or you do not agree with the Terms set forth herein, you must not accept this Order Form and may not use the Service.
- The Effective Date of the Agreement between Subscriber and DSI is the date Subscriber accepts this Order Form.

Additional information

- DSI fees do not include any taxes, levies, duties, or similar government assessments for which Subscriber may be responsible. Tax exemption certifications can be sent to accountsreceiveable@dudesolutions.com (mailto:accountsreceiveable@dudesolutions.com).
- Billing frequency other than annual is subject to additional processing fees.
- Please reference Q-198274 on any applicable purchase order; address purchase order to: Dude Solutions, 11000 Regency Parkway, Suite 110, Cary, NC 27518
- Dude Solutions, Inc. maintains the necessary liability coverage for its products and professional services. Proof of insurance can be provided upon request.

Signature

Presented to:

Q-198274
November 23, 2020, 10:54:46 PM

Accepted by:

Printed Name

Signed Name

Title

Date

EXHIBIT "3"

Change Order Form

Consisting of 4 Pages

CHANGE ORDER NO. _
To Piggyback Agreement dated_____
Between the City of Port Orange and Dude Solutions, Inc.

Project: _____

The following changes are hereby made to the Contract Documents:

CHANGE IN CONTRACT PRICE: Original Contract Price: $	**CHANGE IN CONTRACT TIMES**: Original Contract Times Substantial Completion: ____days Final Completion ____days
Net changes from previous Change Order: No. _: $ $	Changes in contract time from previous Change Orders: No. _:_____days ____days
Contract Price prior to this Change Order: $	Contract Completion Date prior to this Change Order: Final Completion: ____date
Net Increase (decrease) of this Change Order No._: $	Changes in contract time requested this Change Order No._: (Requires Council Approval) ___days
Contract Price with all approved Change Orders: $	Contract Times with all approved Change Orders: Final Completion: ____date

CHANGES ORDERED:

I. GENERAL: This Change Order is necessary to cover changes in the work to be performed under the_____entered into by and between the parties on _____.

II. REQUIRED CHANGES: To provide for_____. No goods shall be delivered nor services commenced hereunder until this Change Order has been fully executed by all parties.

III. JUSTIFICATION:
Changes in scope require Council approval. Is this a scope change?

IV. PAYMENT: Payment for this Change Order shall be made in accordance with the terms of the_____subject to a limit up to but not to exceed $_____. All payments shall be governed by the Local Government Prompt Payment Act as set forth in Florida Statutes Section 218.70 through 218.79, as amended.

V. This Change Order may be executed in one or more counterparts, each of which shall be deemed to be an original but all of which together shall constitute one and the same instrument. The delivery by facsimile or e-mail of an executed copy of this Change Order shall be deemed valid as if an original signature was delivered. No contract shall be formed between the Contractor and the City until the City signs this Change Order.

Acknowledgments:

The aforementioned change, and work affected thereby, is subject to all provisions of the original contract not specifically changed by this Change Order;

It is expressly understood and agreed that the approval of the Change Order shall have no effect on the original contract other than matters expressly provided herein;

The prices quoted are fair and reasonable and in proper ratio to the cost of the original work contracted for under competitive bidding; and,

The change in price and/or delivery date described is considered to be fair and reasonable and has been mutually agreed upon in full agreement and final settlement of all claims arising out of this modification including all claims for delays and disruptions resulting from, caused by, or incident to such modifications and change orders.

RECOMMENDED BY:

_____

Department Project Manager

By:_____

Printed Name:_____

Title:_____

ACCEPTED BY:

DUDE SOLUTIONS, INC.

Contractor

By:_____

Printed Name:_____

Title:_____

Date Signed:_____

Date Signed:_____

RECOMMENDED BY:

_____

City's Representative

By:_____

Printed Name:_____

Title:_____

Date Signed:_____

RECOMMENDED BY:

_____

Engineer of Record

By:_____

Printed Name:_____

Title _____

Date Signed:_____

APPROVED BY:
CITY OF PORT ORANGE
Department Head

By:_____
Printed Name: Tim Burman
Title: Community Development Director

Date Signed:_____

City Manager

By:_____
_____, City Manager

Date Signed:_____

<u>If Council approval is required:</u>

By:_____
Donald O. Burnette, Mayor

Date Signed:_____

Affirmed:

_____
Robin L. Fenwick, MMC, City Clerk

Date Signed:_____

EXHIBIT "4"

Base Contract

Consisting of __ Pages

Region 4 Education Service Center (ESC)

Contract R161802

for

Facilities Management Software and Solutions

with

Dude Solutions, Inc.

Effective: April 1, 2017

The following documents comprise the executed contract between the Region 4 Education Service Center and Dude Solutions, Inc., effective April 1, 2017:

I. Vendor Contract and Signature Form
II. Supplier's Response to the RFP, incorporated by reference

APPENDIX A

VENDOR CONTRACT AND SIGNATURE FORM

*This Vendor Contract and Signature Form ("Contract") is made as of **2016**, by and between and Region 4 Education Service Center ("Region 4 ESC") for the purchase of **Facilities Management Software.***

RECITALS

WHEREAS, both parties agree and understand that the following pages will constitute the contract between the successful vendor(s) and Region 4 ESC, having its principal place of business at 7145 West Tidwell Road, Houston, TX 77092.

WHEREAS, Vendor agrees to include, in writing, any required exceptions or deviations from these terms, conditions, and specifications; and it is further understood that, if agreed to by Region 4 ESC, said exceptions or deviations will be incorporated into the final contract "Vendor Contract."

WHEREAS, this contract consists of the provisions set forth below, including provisions of all attachments referenced herein. In the event of a conflict between the provisions set forth below and those contained in any attachment, the provisions set forth below shall control.

WHEREAS, the Vendor Contract will provide that any state, county, special district, local government, school district, private K-12 school, technical or vocational school, higher education institution (including community colleges, colleges and universities, both public and private), other government agencies or non-profit organization may purchase products and services at prices indicated in the Vendor Contract upon registering and becoming a member with TCPN; and it being further understood that Region 4 ESC shall act as the Lead Public Agency with respect to all such purchase agreements.

WHEREAS, TCPN has the administrative and legal capacity to administer purchases on behalf of Region 4 ESC under the Vendor Contract with participating public agencies and entities, as permitted by applicable law.

ARTICLE 1- GENERAL TERMS AND CONDITIONS

1.1 TCPN shall be afforded all of the rights, privileges and indemnifications afforded to Region 4 ESC under the Vendor Contract, and such rights, privileges and indemnifications shall accrue and apply with equal effect to TCPN, including, without limitation, Vendors obligation to provide insurance and other indemnifications to Lead Public Agency.

1.2 Awarded vendor shall perform all duties, responsibilities and obligations, set forth in this agreement, and required under the Vendor Contract.

1.3 TCPN shall perform its duties, responsibilities and obligations as administrator of purchases, set forth in this agreement, and required under the Vendor Contract.

1.4 *Purchasing procedure:*

- Purchase orders are issued by participating governmental agencies to the awarded vendor indicating on the PO "**Per TCPN Contract # R** ."

- Vendor delivers goods/services directly to the participating agency.
- Awarded vendor invoices the participating agency directly.
- Awarded vendor receives payment directly from the participating agency.
- Awarded vendor reports sales monthly to TCPN.

1.5 **Customer Support**: The vendor shall provide timely and accurate technical advice and sales support to Region 4 ESC staff, TCPN staff and participating agencies. The vendor shall respond to such requests within one (1) working day after receipt of the request.

ARTICLE 2- ANTICIPATED TERM OF AGREEMENT

2.1 Unless otherwise stated, all contracts are for a period of three (3) years with an option to renew annually for an additional two (2) years if agreed to by Region 4 ESC. Region 4 ESC will notify the vendor in writing if the contract is extended. Awarded vendor shall honor all administrative fees for any sales made based on the contact whether renewed or not.

2.2 Region 4 ESC shall review the contract prior to the renewal date and notify the current awarded vendor, no less than ninety (90) days of Region 4 ESC's intent renew the contract. Upon receipt of notice, awarded vendor must notify Region 4 ESC if it elects not to renew. Awarded vendor shall honor the administrative fee for any sales incurred throughout the life of the contract on any sales made based on a Region 4 ESC contract whether awarded a renewal or not. Region 4 ESC reserves the right to exercise each two-year extension annually.

ARTICLE 3- REPRESENTATIONS AND COVENANTS

3.1. **Scope**: This contract is based on the need to provide the economic benefits of volume purchasing and reduction in administrative costs through cooperative purchasing to schools and other members. Although contractors may restrict sales to certain public units (for example, state agencies or local government units), any contract that prohibits sales from being made to public school districts may not be considered. Sales without restriction to any Members are preferred. These types of contracts are commonly referred to as being "piggybackable".

3.2. **Compliance**: Cooperative Purchasing Agreements between TCPN and its Members have been established under state procurement law.

3.3. **Offeror's Promise**: Offeror agrees all prices, terms, warranties, and benefits granted by Offeror to Members through this contract are comparable to or better than the equivalent terms offered by Offeror to any present customer meeting the same qualifications or requirements.

ARTICLE 4- FORMATION OF CONTRACT

4.1. **Offeror Contract Documents**: Region 4 ESC will review proposed offeror contract documents. Vendor's contract document shall not become part of Region 4 ESC's contract with vendor unless and until an authorized representative of Region 4 ESC reviews and approves it.

4.2. **Form of Contract**: The form of contract for this solicitation shall be the Request for Proposal, the awarded proposal(s) and best and final offer(s), and properly issued and reviewed purchase orders referencing the requirements of the Request for Proposals. If a firm submitting an offer requires Region 4 ESC and/or Member to sign an additional agreement, a copy of the

proposed agreement must be included with the proposal.

4.3. **Entire Agreement (Parol evidence)**: The contract, as specified above, represents the final written expression of agreement. All agreements are contained herein and no other agreements or representations that materially alter it are acceptable.

4.4. **Assignment of Contract**: No assignment of contract may be made without the prior written approval of Region 4 ESC. Purchase orders and payment can only be made to awarded vendor unless otherwise approved by Region 4 ESC. Awarded vendor is required to notify Region 4 ESC when any material change in operations is made that may adversely affect members (i.e. bankruptcy, change of ownership, merger, etc.).

4.5. **Novation**: If contractor sells or transfers all assets or the entire portion of the assets used to perform this contract, a successor in interest must guarantee to perform all obligations under this contract. Region 4 ESC reserves the right to accept or reject any new party. A simple change of name agreement will not change the contractual obligations of contractor.

4.6. **Contract Alterations**: No alterations to the terms of this contract shall be valid or binding unless authorized and signed by a Region 4 ESC staff member.

4.7. **Order of Precedence**: In the event of a conflict in the provisions of the contract as accepted by Region 4 ESC, the following order of precedence shall prevail:

- Special terms and conditions
- General terms and conditions
- Specifications and scope of work
- Attachments and exhibits
- Documents referenced or included in the solicitation

4.8 **Supplemental Agreements**: The entity participating in the Region 4 ESC contract and awarded vendor may enter into a separate supplemental agreement to further define the level of service requirements over and above the minimum defined in this contract i.e. invoice requirements, ordering requirements, specialized delivery, etc. Any supplemental agreement developed as a result of this contract is exclusively between the participating entity and awarded vendor. Neither Region 4 ESC, TCPN, its agents, members and employees shall be made party to any claim for breach of such agreement.

4.9 **Adding authorized distributors/dealers**: Awarded vendors are prohibited from authorizing additional distributors or dealers, other than those identified at the time of submitting their proposal, to sell under their contract award without notification and prior written approval from TCPN. Awarded vendors must notify TCPN each time it wishes to add an authorized distributor or dealer. Purchase orders and payment can only be made to awarded vendor unless otherwise approved by TCPN. Pricing provided to members by added distributors or dealers must also be less than or equal to the pricing offered by the awarded contract holder, unless otherwise approved by TCPN.

ARTICLE 5- TERMINATION OF CONTRACT

5.1. **Cancellation for Non-Performance or Contractor Deficiency:** Region 4 ESC may terminate any contract if Members have not used the contract, or if purchase volume is determined to be low volume in any 12-month period. Region 4 ESC reserves the right to cancel the whole or any part of this contract due to failure by contractor to carry out any obligation, term or condition of the

contract. Region 4 ESC may issue a written deficiency notice to contractor for acting or failing to act in any of the following:

i. Providing material that does not meet the specifications of the contract;
ii. Providing work and/or material that was not awarded under the contract;
iii. Failing to adequately perform the services set forth in the scope of work and specifications;
iv. Failing to complete required work or furnish required materials within a reasonable amount of time;
v. Failing to make progress in performance of the contract and/or giving Region 4 ESC reason to believe that contractor will not or cannot perform the requirements of the contract; and/or
vi. Performing work or providing services under the contract prior to receiving an authorized purchase order from Region 4 ESC or participating member prior to such work

Upon receipt of a written deficiency notice, contractor shall have ten (10) days to provide a satisfactory response to Region 4 ESC. Failure to adequately address all issues of concern may result in contract cancellation. Upon cancellation under this paragraph, all goods, materials, work, documents, data and reports prepared by contractor under the contract shall become the property of the Member on demand.

5.2 **Termination for Cause**: If, for any reason, the Vendor fails to fulfill its obligation in a timely manner, or if the vendor violates any of the covenants, agreements, or stipulations of this contract Region 4 ESC reserves the right to terminate the contract immediately and pursue all other applicable remedies afforded by law. Such termination shall be effective by delivery of notice, to the vendor, specifying the effective date of termination. In such event, all documents, data, studies, surveys, drawings, maps, models and reports prepared by vendor for this solicitation may become the property of the participating agency or entity. If such event does occur then vendor will be entitled to receive just and equitable compensation for the satisfactory work completed on such documents.

5.3 **Delivery/Service Failures**: Failure to deliver goods or services within the time specified, or within a reasonable time period as interpreted by the purchasing agent or failure to make replacements or corrections of rejected articles/services when so requested shall constitute grounds for the contract to be terminated. In the event that the participating agency or entity must purchase in an open market, contractor agrees to reimburse the participating agency or entity, within a reasonable time period, for all expenses incurred.

5.4 **Force Majeure**: If by reason of Force Majeure, either party hereto shall be rendered unable wholly or in part to carry out its obligations under this Agreement then such party shall give notice and full particulars of Force Majeure in writing to the other party within a reasonable time after occurrence of the event or cause relied upon, and the obligation of the party giving such notice, so far as it is affected by such Force Majeure, shall be suspended during the continuance of the inability then claimed, except as hereinafter provided, but for no longer period, and such party shall endeavor to remove or overcome such inability with all reasonable dispatch.

The term Force Majeure as employed herein, shall mean acts of God, strikes, lockouts, or other industrial disturbances, act of public enemy, orders of any kind of government of the United States or the State of Texas or any civil or military authority; insurrections; riots; epidemics; landslides; lighting; earthquake; fires; hurricanes; storms; floods; washouts; droughts; arrests; restraint of government and people; civil disturbances; explosions, breakage or accidents to machinery, pipelines or canals, or other causes not reasonably within the control of the party claiming such inability. It is understood and agreed that the settlement of strikes and

lockouts shall be entirely within the discretion of the party having the difficulty, and that the above requirement that any Force Majeure shall be remedied with all reasonable dispatch shall not require the settlement of strikes and lockouts by acceding to the demands of the opposing party or parties when such settlement is unfavorable in the judgment of the party having the difficulty.

5.5 **Standard Cancellation**: Region 4 ESC may cancel this contract in whole or in part by providing written notice. The cancellation will take effect 30 business days after the other party receives the notice of cancellation. After the 30th business day all work will cease following completion of final purchase order. Vendor may be requested to provide additional items not already on contract at any time.

ARTICLE 6- LICENSES

6.1 **Duty to keep current license:** Vendor shall maintain in current status all federal, state and local licenses, bonds and permits required for the operation of the business conducted by vendor. Vendor shall remain fully informed of and in compliance with all ordinances and regulations pertaining to the lawful provision of services under the contract. Region 4 ESC reserves the right to stop work and/or cancel the contract of any vendor whose license(s) expire, lapse, are suspended or terminated.

6.2 **Survival Clause:** All applicable software license agreements, warranties or service agreements that were entered into between Vendor and Customer under the terms and conditions of the Contract shall survive the expiration or termination of the Contract. All Purchase Orders issued and accepted by Order Fulfiller shall survive expiration or termination of the Contract.

ARTICLE 7- DELIVERY PROVISIONS

7.1 **Delivery**: Vendor shall deliver said materials purchased on this contract to the Member issuing a Purchase Order. Conforming product shall be shipped within 7 days of receipt of Purchase Order. If delivery is not or cannot be made within this time period the vendor must receive authorization from the purchasing agency for the delayed delivery. At this point the participating entity may cancel the order if estimated shipping time is not acceptable.

7.2 **Inspection & Acceptance**: If defective or incorrect material is delivered, purchasing agency may make the determination to return the material to the vendor at no cost to the purchasing agency. The vendor agrees to pay all shipping costs for the return shipment. Vendor shall be responsible for arranging the return of the defective or incorrect material.

ARTICLE 8- BILLING AND REPORTING

8.1 **Payments**: The entity using the contract will make payments directly to the awarded vendor. Payment shall be made after satisfactory performance, in accordance with all provisions thereof, and upon receipt of a properly completed invoice.

8.2 **Invoices**: The awarded vendor shall submit invoices to the participating entity clearly stating *"Per TCPN Contract".* The shipment tracking number or pertinent information for verification shall be made available upon request.

8.3 **Tax Exempt Status**: Since this is a national contract, knowing the tax laws in each state is the sole responsibility of the vendor.

8.4 **Reporting**: The awarded vendor shall provide TCPN with an electronic accounting report, in a format prescribed by TCPN, on a monthly basis summarizing all contract Sales for the applicable month.

Reports of Contract Sales for Region 4 ESC and member agencies in each calendar month shall be provided by awarded vendor to TCPN by the 10th day of the following month. If there are no sales to report, Vendor is still required to communicate that information via email.

Failure to provide a monthly report of the administrative fees within the time and manner specified herein shall constitute a material breach of this contract and if not cured within thirty (30) days of written to Supplier shall be deemed a cause for termination of the contract at Region4 ESC's sole discretion.

ARTICLE 9- PRICING

9.1 **Best price guarantee**: The awarded vendor agrees to provide pricing to Region 4 ESC and its participating entities that are the lowest pricing available and the pricing shall remain so throughout the duration of the contract. Pricing offered to Federal government buying consortiums for goods and services is exempt from this requirement. The awarded vendor, however, agrees to lower the cost of any product purchased through TCPN following a reduction in the manufacturer or publisher's direct cost.

9.2 **Price increase**: Should it become necessary or proper during the term of this contract to make any change in design or any alterations that will increase expense Region 4 ESC must be notified immediately. Price increases must be approved by Region 4 ESC and no payment for additional materials or services, beyond the amount stipulated in the contract, shall be paid without prior approval. All price increases must be supported by manufacture documentation, or a formal cost justification letter.

Awarded vendor must honor previous prices for thirty (30) days after approval and written notification from Region 4 ESC if requested.

It is the awarded vendor's responsibility to keep all pricing up to date and on file with Region 4 ESC. All price changes must be provided to Region 4 ESC, using the same format as was accepted in the original contract.

9.3 **Additional Charges**: All deliveries shall be freight prepaid, F.O.B. destination and shall be included in all pricing offered unless otherwise clearly stated in writing.

9.4 **Price reduction and adjustment:** Price reduction may be offered at any time during contract and shall become effective upon notice of acceptance from Region 4 ESC. Special, time-limited reductions are permissible under the following conditions: 1) reduction is available to all Members equally; 2) reduction is for a specific time period, normally not less than thirty (30) days; 3) original price is not exceeded after the time-limit; and 4) Region 4 ESC has approved the new prices prior to any offer of the prices to a Member. Vendor shall offer Region 4 ESC any published price reduction during the contract period.

9.5 **Prevailing Wage**: It shall be the responsibility of the Vendor to comply, when applicable, with the prevailing wage legislation in effect in the jurisdiction of the purchaser (Region 4 ESC or its Members). It shall further be the responsibility of the Vendor to monitor the prevailing wage rates as established by the appropriate department of labor for any increase in rates during the term of this contract and adjust wage rates accordingly.

9.6 **Administrative Fees:** All pricing submitted to Region 4 ESC shall include the administrative fee to be remitted to TCPN by the awarded vendor.

The awarded vendor agrees to pay administrative fees monthly to TCPN in the amount of 2% of the total purchase amount paid to awarded vendor, less refunds, credits on returns, rebates and discounts, for the sale of products and/or services to Region 4 ESC and member agencies pursuant to the contract (as amended from time to time and including any renewal thereof) ("Contract Sales").

Administrative fee payments are to accompany the contract monthly sales report by the 10th day of the following month, in the amount indicated on the report as being due. Administrative fee payments are to be paid by the awarded vendor via Automated Clearing House to a TCPN designated financial institution.

Failure to provide a monthly payment of the administrative fees within the time and manner specified herein shall constitute a material breach of the contract and if not cured within thirty (30) day of written notice to awarded vendor shall be deemed a cause for termination of the contract, at Region 4 ESC's sole discretion.

All administrative fees not paid when due shall bear interest at a rate equal to the lesser of 1 ½% per month or the maximum rate permitted by law until paid in full.

ARTICLE 10- PRICING AUDIT

10.1 **Audit rights:** Vendor shall, at Vendor's sole expense, maintain appropriate due diligence of all purchases made by Region 4 ESC and any entity that utilizes this Agreement. TCPN and Region 4 ESC each reserve the right to audit the accounting for a period of three (3) years from the time such purchases are made. This audit right shall survive termination of this Agreement for a period of one (1) year from the effective date of termination. In the State of New Jersey, this audit right shall survive termination of this Agreement for a period of five (5) years from the date of final payment. Such records shall be made available to the New Jersey Office of the State Comptroller upon request. Region 4 ESC shall have the authority to conduct random audits of Vendor's pricing that is offered to eligible entities at Region 4 ESC's sole cost and expense. Notwithstanding the foregoing, in the event that Region 4 ESC is made aware of any pricing being offered to eligible agencies that is materially inconsistent with the pricing under this agreement, Region 4 ESC shall have the ability to conduct an extensive audit of Vendor's pricing at Vendor's sole cost and expense. Region 4 ESC may conduct the audit internally or may engage a third-party auditing firm. In the event of an audit, the requested materials shall be provided in the format and at the location designated by Region 4 ESC or TCPN.

ARTICLE 11- OFFEROR PRODUCT LINE REQUIREMENTS

11.1 **Current products**: Proposals shall be for materials and equipment in current production and marketed to the general public and education/government agencies at the time the proposal is submitted.

11.2 **Discontinued products**: If a product or model is discontinued by the manufacturer, vendor may substitute a new product or model if the replacement product meets or exceeds the specifications and performance of the discontinued model and if the discount is the same or greater than the discontinued model.

11.3 **New products/Services**: New products and/or services that meet the scope of work may be added to the contract. Pricing shall be equivalent to the percentage discount for other products. Vendor may replace or add product lines to an existing contract if the line is

replacing or supplementing products on contract, is equal or superior to the original products offered, is discounted in a similar or to a greater degree, and if the products meet the requirements of the solicitation. No products and/or services may be added to avoid competitive procurement requirements. Region 4 ESC may require additions to be submitted with documentation from Members demonstrating an interest in, or a potential requirement for, the new product or service. Region 4 ESC may reject any additions without cause.

11.4 **Options**: Optional equipment for products under contract may be added to the contract at the time they become available under the following conditions: 1) the option is priced at a discount similar to other options; 2) the option is an enhancement to the unit that improves performance or reliability.

11.5 **Product line**: Offerors with a published catalog may submit the entire catalog. Region 4 ESC reserves the right to select products within the catalog for award without having to award all contents. Region 4 ESC may reject any addition of equipment options without cause.

11.6 **Warranty conditions**: All supplies, equipment and services shall include manufacturer's minimum standard warranty and one (1) year labor warranty unless otherwise agreed to in writing.

11.7 **Buy American requirement:** (for New Jersey and all other applicable States) Vendors may only use unmanufactured construction material mined or produced in the United States, as required by the Buy American Act. Where trade agreements apply, to the extent permitted by applicable law, then unmanufactured construction material mined or produced in a designated country may also be used. Vendors are required to check state specific requirements to ensure compliance with this requirement.

ARTICLE 12- SITE REQUIREMENTS

12.1 **Cleanup**: Vendor shall clean up and remove all debris and rubbish resulting from their work as required or directed by Member. Upon completion of the work, the premises shall be left in good repair and an orderly, neat, clean and unobstructed condition.

12.2 **Preparation**: Vendor shall not begin a project for which Member has not prepared the site, unless vendor does the preparation work at no cost, or until Member includes the cost of site preparation in a purchase order. Site preparation includes, but is not limited to: moving furniture, installing wiring for networks or power, and similar pre-installation requirements.

12.3 **Registered sex offender restrictions**: For work to be performed at schools, vendor agrees that no employee or employee of a subcontractor who has been adjudicated to be a registered sex offender will perform work at any time when students are or are reasonably expected to be present. Vendor agrees that a violation of this condition shall be considered a material breach and may result in the cancellation of the purchase order at the Member's discretion. Vendor must identify any additional costs associated with compliance of this term. If no costs are specified, compliance with this term will be provided at no additional charge.

12.4 **Safety measures**: Vendor shall take all reasonable precautions for the safety of employees on the worksite, and shall erect and properly maintain all necessary safeguards for protection of workers and the public. Vendor shall post warning signs against all hazards created by its operation and work in progress. Proper precautions shall be taken pursuant to state law and standard practices to protect workers, general public and existing structures from injury or damage.

12.5 **Smoking**: Persons working under the contract shall adhere to local smoking policies.

Smoking will only be permitted in posted areas or off premises.

12.6 **Stored materials**: Upon prior written agreement between the vendor and Member, payment may be made for materials not incorporated in the work but delivered and suitably stored at the site or some other location, for installation at a later date. An inventory of the stored materials must be provided to Member prior to payment. Such materials must be stored and protected in a secure location, and be insured for their full value by the vendor against loss and damage. Vendor agrees to provide proof of coverage and/or addition of Member as an additional insured upon Member's request. Additionally, if stored offsite, the materials must also be clearly identified as property of buying Member and be separated from other materials. Member must be allowed reasonable opportunity to inspect and take inventory of stored materials, on or offsite, as necessary.

Until final acceptance by the Member, it shall be the Vendor's responsibility to protect all materials and equipment. The Vendor warrants and guarantees that title for all work, materials and equipment shall pass to the Member upon final acceptance.

ARTICLE 13- MISCELLANEOUS

13.1 **Funding Out Clause**: Any/all contracts exceeding one (1) year shall include a standard "funding out" clause. A contract for the acquisition, including lease, of real or personal property is a commitment of the entity's current revenue only, provided the contract contains either or both of the following provisions:

"Retains to the entity the continuing right to terminate the contract at the expiration of each budget period during the term of the contract and is conditioned on a best efforts attempt by the entity to obtain appropriate funds for payment of the contract."

13.2 **Disclosures**: Offeror affirms that he/she has not given, offered to give, nor intends to give at any time hereafter any economic opportunity, future employment, gift, loan, gratuity, special discount, trip, favor or service to a public servant in connection with this contract.

Include a complete description of any and all relationships that might be considered a conflict of interest in doing business with participants in TCPN.

The Offeror affirms that, to the best of his/her knowledge, the offer has been arrived at independently, and is submitted without collusion with anyone to obtain information or gain any favoritism that would in any way limit competition or give an unfair advantage over other vendors in the award of this contract.

13.3 **Indemnity**: The awarded vendor shall protect, indemnify, and hold harmless both Region 4 ESC and TCPN and its participants, administrators, employees and agents against all claims, damages, losses and expenses arising out of or resulting from the actions of the vendor, vendor employees or vendor subcontractors in the preparation of the solicitation and the later execution of the contract, including any supplemental agreements with members. Any litigation involving either Region 4 ESC or TCPN, its administrators and employees and agents will be in Harris County, Texas. Any litigation involving TCPN members shall be in the jurisdiction of the participating agency.

13.4 **Franchise Tax**: The Offeror hereby certifies that he/she is not currently delinquent in the

payment of any franchise taxes.

13.5 **Marketing**: Awarded vendor agrees to allow Region 4 ESC/TCPN to use their name and logo within website, marketing materials and advertisement. Any use of TCPN name and logo or any form of publicity, inclusive of press releases, regarding this contract by awarded vendor must have prior approval from TCPN.

13.6 **Certificates of Insurance**: Certificates of insurance shall be delivered to the Region 4 ESC participant prior to commencement of work. The insurance company shall be licensed in the applicable state in which work is being conducted. The awarded vendor shall give the participating entity a minimum of ten (10) days' notice prior to any modifications or cancellation of policies. The awarded vendor shall require all subcontractors performing any work to maintain coverage as specified.

13.7 **Legal Obligations**: It is the Offeror's responsibility to be aware of and comply with all local, state, and federal laws governing the sale of products/services identified in this RFP and any awarded contract and shall comply with all while fulfilling the RFP. Applicable laws and regulation must be followed even if not specifically identified herein.

13.8 **Open Records Policy**: Because Region 4 ESC contracts are awarded by a governmental entity, responses submitted are subject to release as public information after contracts are executed. If a vendor believes that its response, or parts of its response, may be exempted from disclosure, the vendor must specify page-by-page and line-by-line the parts of the response, which it believes, are exempt. In addition, the Offeror must specify which exception(s) are applicable and provide detailed reasons to substantiate the exception(s). Offeror must provide this information on the "Acknowledgement and Acceptance to Region 4 ESC's Open Record Policy" form found at the beginning of this solicitation. Any information that is unmarked will be considered public information and released, if requested under the Public Information Act.

The determination of whether information is confidential and not subject to disclosure is the duty of the Office of Attorney General (OAG). Region 4 ESC must provide the OAG sufficient information to render an opinion and therefore, vague and general claims to confidentiality by the Offeror are not acceptable. Region 4 ESC must comply with the opinions of the OAG. Region 4 ESC assumes no responsibility for asserting legal arguments on behalf of any vendor. Offeror are advised to consult with their legal counsel concerning disclosure issues resulting from this procurement process and to take precautions to safeguard trade secrets and other proprietary information.

After completion of award, these documents will be available for public inspection.

VENDOR CONTRACT SIGNATURE FORM

The undersigned hereby proposes and agrees to furnish goods and/or services in strict compliance with the terms, specifications and conditions at the prices proposed within response unless noted in writing. The undersigned further certifies that he/she is an officer of the company and has authority to negotiate and bind the company named below and has not prepared this proposal in collusion with any other Offeror and that the contents of this proposal as to prices, terms or conditions of said proposal have not been communicated by the undersigned nor by any employee or agent to any person engaged in this type of business prior to the official opening of this proposal.

Prices are guaranteed: **120 days from date of contract award**

VENDOR CONTRACT SIGNATURE FORM

The undersigned hereby proposes and agrees to furnish goods and/or services in strict compliance with the terms, specifications and conditions at the prices proposed within response unless noted in writing. The undersigned further certifies that he/she is an officer of the company and has authority to negotiate and bind the company named below and has not prepared this proposal in collusion with any other Offeror and that the contents of this proposal as to prices, terms or conditions of said proposal have not been communicated by the undersigned nor by any employee or agent to any person engaged in this type of business prior to the official opening of this proposal.

Prices are guaranteed: **120 days from date of contract award**

Company name: Dude Solutions, Inc.

Address: 11000 Regency Pkwy., Ste. 110

City/State/Zip: Cary, NC 27518

Telephone No.: (877) 868-3833

Fax No.: (800) 216-3063

Email address: scott@schooldude.com

Printed name: Scott V. Carpenter

Position with company: SVP of Sales

Authorized signature: DocuSigned by: Scott Carpenter 7F5B73011AB5408

Accepted by The Cooperative Purchasing Network:

Term of contract April 1, 2017 **to** March 31, 2020

Unless otherwise stated, all contracts are for a period of three (3) years with an option to renew annually for an additional two (2) years if agreed to by Region 4 ESC and the awarded vendor. Awarded vendor shall honor all administrative fees for any sales made based on a contract whether renewed or not.

Region 4 ESC Authorized Board Member — Date: 12/19/2016

Andy Hayes
Print Name

Region 4 ESC Authorized Board Member — Date: 12-14-16

Rick Peeples
Print Name

TCPN Contract Number R161802

Appendix D:
GENERAL TERMS & CONDITIONS ACCEPTANCE FORM

Signature on the following page certifies complete acceptance of the General Terms and Conditions in this solicitation, except as noted below (additional pages may be attached, if necessary).

Check one of the following responses to the General Terms and Conditions:

☐ We take no exceptions/deviations to the general terms and conditions

(*Note: If none are listed below, it is understood that no exceptions/deviations are taken.)*

☒ We take the following exceptions/deviations to the general terms and conditions. All exceptions/deviations must be clearly explained. Reference the corresponding general terms and conditions that you are taking exceptions/deviations to. Clearly state if you are adding additions terms and conditions to the general terms and conditions. Provide details on your exceptions/deviations below:

(*Note: Unacceptable exceptions shall remove your proposal from consideration for award. TCPN shall be the sole judge on the acceptance of exceptions/deviations and TCPN's decision shall be final.*)

RFP Section and Page	Term or Condition	Exceptions/Deviations
Article 5, page 18	5.2 – Termination for Cause	Dude Solutions respectfully request that a cure period of at least seven (7) days to ensure that no minor deficiency triggers a complete, immediate termination.
Article 5, page 18	5.3 – Delivery/Service Failures	Dude Solutions respectfully request that "In the event that the participating agency or entity must purchase in an open market, contractor agrees to reimburse the participating agency or entity, within a reasonable time period, for all expenses incurred." Be removed from the provision.
Article 10, page 21	10.1 – Audit Rights	Dude Solutions respectfully request that the following text in red be inserted to the provision "Vendor shall, at Vendor's sole expense, maintain appropriate due diligence of all purchases made by Region 4 ESC and any entity that utilizes this Agreement. TCPN and Region 4 ESC each reserve the right to audit the accounting for a period of three (3) years from the time such purchases are made not to exceed one (1) time per calendar year.
Section: Article 11, page 21	11.6 - Warranty conditions	Dude Solutions conditions of use are governed by our online conditions of use statement available at: https://www.schooldude.com/terms or https://www.dudesolutions.com/terms/

		We offer the ability for Dude Solutions clients to cancel their service at any time and for any reason and receive a prorated refund for their annual fees (does not include onetime training QuickStart fees) for the remaining months of unused services. And, there is a 60 day full refund period during the first year of the agreement.
Section: Article 13, pages 17	13.3 -Indemnity	Dude Solutions agrees to be responsible only for its negligence regarding indemnification and request that the provision be modified as follows: "The awarded vendor shall protect and indemnify, ~~and hold harmless~~ both Region 4 ESC and TCPN and its participants, administrators, employees and agents against all claims, damages, losses and expenses arising out of or resulting from the negligent actions of the vendor, vendor employees or vendor subcontractors in the preparation of the solicitation and the later execution of the contract, including any supplemental agreements with members. Any litigation involving either Region 4 ESC or TCPN, its administrators and employees and agents will be in Harris County, Texas. Any litigation involving TCPN members shall be in the jurisdiction of the participating agency."

APPENDIX E
QUESTIONNAIRE

Please provide responses to the following questions that address your company's operations, organization, structure and processes for providing products and services.

1. **States Covered**
   Bidder must indicate any and all states where products and services can be offered.
   Please indicate the price co-efficient for each state if it varies.

☐ **50 States & District of Columbia** (Selecting this box is equal to checking all boxes below)

- ☒ Alabama
- ☒ Alaska
- ☐ Arizona
- ☒ Arkansas
- ☐ California
- ☐ Colorado
- ☐ Connecticut
- ☒ Delaware
- ☒ District of Columbia
- ☒ Florida
- ☒ Georgia
- ☒ Hawaii
- ☒ Idaho
- ☒ Illinois
- ☐ Indiana
- ☐ Iowa
- ☐ Kansas
- ☐ Kentucky
- ☒ Louisiana
- ☐ Maine
- ☒ Maryland
- ☐ Massachusetts
- ☐ Michigan
- ☐ Minnesota
- ☒ Mississippi
- ☐ Missouri
- ☐ Montana
- ☐ Nebraska
- ☒ Nevada
- ☒ New Hampshire
- ☐ New Jersey
- ☐ New Mexico
- ☒ New York
- ☒ North Carolina
- ☐ North Dakota
- ☐ Ohio
- ☒ Oklahoma
- ☐ Oregon
- ☐ Pennsylvania
- ☒ Rhode Island
- ☒ South Carolina
- ☒ South Dakota
- ☒ Tennessee
- ☒ Texas
- ☒ Utah
- ☒ Vermont
- ☐ Virginia
- ☐ Washington
- ☒ West Virginia
- ☐ Wisconsin
- ☐ Wyoming

☒ **All U.S. Territories & Outlying Areas** (Selecting this box is equal to checking all boxes below)

- ☐ American Samoa
- ☐ Federated States of Micronesia
- ☐ Guam
- ☐ Midway Islands
- ☐ Northern Marina Islands
- ☐ Puerto Rico
- ☐ U.S. Virgin Islands

2. Diversity Programs

- Do you currently have a diversity program or any diversity partners that you do business with ☐Yes ☒No

- If the answer is yes, do you plan to offer your program or partnership through TCPN ☐Yes ☒No

(If the answer is yes, attach a statement detailing the structure of your program, along with a list of your diversity alliances and a copy of their certifications.)

- Will the products accessible through your diversity program or partnership be offered to TCPN members at the same pricing offered by your company? ☐Yes ☒No

(If answer is no, attach a statement detailing how pricing for participants would be calculated.)

3. Minority and Women Business Enterprise (MWBE) and (HUB) Participation

It is the policy of some entities participating in TCPN to involve minority and women business enterprises (M/WBE), small and/or disadvantaged business enterprises, disable veterans business enterprises, historically utilized businesses (HUB) and other diversity recognized businesses in the purchase of goods and services. Offerors shall indicate below whether or not they hold certification in any of the classified areas and include proof of such certification with their response.

a. **Minority Women Business Enterprise** ☐Yes ☒No

Offeror certifies that this firm is an MWBE

List certifying agency:

b. **Small Business Enterprise (SBE) or Disadvantaged Business Enterprise (DBE)** Offeror certifies that this firm is a SBE or DBE ☐Yes ☒No

List certifying agency:

c. **Disabled Veterans Business Enterprise (DVBE)**

Offeror certifies that this firm is a DVBE ☐Yes ☒No

List certifying agency:

d. **Historically Underutilized Businesses (HUB)**

Offeror certifies that this firm is a HUB ☐Yes ☒No

List certifying agency:

e. **Historically Underutilized Business Zone Enterprise (HUB Zone)**

Offeror certifies that this firm is a HUB Zone ☐Yes ☒No

List certifying agency:

f. **Other**

Offeror certifies that this firm is a recognized diversity certificate holder ☐Yes ☒No

List certifying agency:

4. Residency

Responding Company's principal place of business is in the city of Cary State of NC.

5. Felony Conviction Notice

Please check applicable box:

☐ A publicly held corporation; therefore, this reporting requirement is not applicable.

☒ Is not owned or operated by anyone who has been convicted of a felony.

☐ Is owned or operated by the following individual(s) who has/have been convicted of a felony.

*If the 3rd box is checked, a detailed explanation of the names and convictions must be attached.

6. Processing Information

Company contact for:

Contract Management

Contact Person: Melissa Buchanan

Title: Contract Administrator

Company: Dude Solutions

Address: 11000 Regency Parkway, Suite 110

City: Cary State: NC Zip: 27518

Phone: 877-868-3833 Fax: 800-216-3063

Email: melissa.buchanan@dudesolutions.com

Billing & Reporting/Accounts Payable

Contact Person: Darrin Dexter

Title: Financial Controller

Company: Dude Solutions

Address: 11000 Regency Parkway, Suite 110

City: Cary State: NC Zip: 27518

Phone: 877-868-3833 Fax: 800-216-3063

Email: darrin.dexter@dudesolutions.com

Marketing

Contact Person: Nick Mirisis

Title: Senior Director of Marketing

Company: Dude Solutions

Address: 11000 Regency Parkway, Suite 110

City: Cary State: NC Zip: 27518

Phone: 877-868-3833 Fax: 800-216-3063

Email: nick.mirisis@dudesolutions.com

7. **Distribution Channel:** Which best describes your company's position in the distribution channel:

☒ Manufacturer direct ☐ Certified education/government reseller

☐ Authorized distributor ☐ Manufacturer marketing through reseller

☐ Value-added reseller ☐ Other _____

8. **Pricing Information**

- In addition to the current typical unit pricing furnished herein, the Vendor agrees to offer all future product introductions at prices that are proportionate to Contract Pricing. ☒Yes ☐No

(If answer is no, attach a statement detailing how pricing for participants would be calculated.)

- Pricing submitted includes the required administrative fee. ☒Yes ☐No

(Fee calculated based on invoice price to customer)

- Additional discounts for purchase of a guaranteed quantity? ☐Yes ☒No

9. Cooperatives

List any other cooperative or state contracts currently held or in the process of securing

Cooperative/State Agency	Discount Offered	Expires	Annual Sales Volume
Association of Educational Purchasing Agencies (AEPA)	15% on Annual Fee, 10% on training	2/28/20	$9,980,636
National Joint Powers Alliance (NJPA)	13% on Annual Fee, 8% on training	12/15/19	$1,631,995
Mohave Educational Services Cooperative, Inc. (MESC)	14% on Annual Fee, 9% on training	3/1/18	$670,774
BuyBoard	13% on Annual Fee, 8% on training	11/30/18	$1,046,690
State of Arkansas	State Pricing	NA	NA
State of New Mexico	State Pricing	NA	NA
State of West Virginia	State Pricing	NA	NA

TAB 3 – COMPANY PROFILE

Appendix F:

COMPANY PROFILE

Please provide the following:

1. Company's official registered name.

   Dude Solutions, Inc.

2. Brief history of your company, including the year it was established.

   With more than 7,000 education institution clients, SchoolDude is the nation's leading provider of on-demand operations management solutions designed exclusively for the unique needs of educational professionals. Backed by the industry's only Legendary Service Program, SchoolDude's broad suite of online applications is revolutionizing the business of managing educational operations. SchoolDude's on-demand tools for operations management offer easy to use, affordable solutions to help both small and large educational institutions save money, increase efficiency and improve services. For more information about SchoolDude, visit www.schooldude.com.

   SchoolDude's founding team has been delivering facility management technology solutions since the mid-eighties. SchoolDude's CEO, Kent Hudson, founded Applied Computer Technologies which became the national market leader for educational facility management software solutions and later sold the company to Carolina Power and Light in 1997. Kent Hudson and Lee Prevost founded SchoolDude in order to take full advantage of utilizing the Internet to provide low cost, efficiency enabling facility management solutions to public agencies with a primary focus on educational clients.

   SchoolDude was founded in 1999 and has been in business over 16 years. SchoolDude has since become the national market leader and the #1 solution for educational facility management solutions. SchoolDude offers online tools that help the facilities department run more efficiently. SchoolDude's headquarter is located at 11000 Regency Parkway, Suite 110, Cary, North Carolina, 27518.

   SchoolDude took a very different path than the typical Internet companies that have been associated with the stock market bubble of the late nineties and early 2000.

3. Company's Dun & Bradstreet (D&B) number.

   DUNS #: 010971658

4. Corporate office location.

   11000 Regency Parkway, Suite 110, Cary, NC 27518

5. List the total number of sales persons employed by your organization within the United States, broken down by market

   Dude Solutions has a team of 165 sales account managers and application engineers focusing 100% of their attention on the sale of services / products that the company offers.

All are employees of Dude Solutions and we do not sell any products thru third parties (reseller).

6. List the number and location of offices, or service centers for all states being bid in solicitation. Additionally, list the names of key contacts at each location with title, address, phone and e-mail address.

SchoolDude also has offices located in GA, WI, ME, NY, and CA as follows:

Georgia Office:

722 Wisper Wind Ct., Woodstock, GA 30189

Name: Kim Wool Title: Regional Manager

Email: kim@schooldude.com Phone: (877) 868-3833

Wisconsin Office:

3130 S Fountain Blvd Unit #1, New Berlin, WI 53151

Name: Matt Hibbard Title: Senior Account Manager_

Email: mhibbard@schooldude.com Phone: (877) 868-3833

California Office:

255 S 4th Ave., Covina, CA 91723

Name: Jamie Waters Title: Senior Account Manager

Email: jamie@schooldude.com Phone: (877) 868-3833

Maine Office:

27 Cumberland Road, South Portland Maine, 04106

Name: Eric Erdman Title: Senior Account Manager

Email: eerdman@schooldude.com Phone: (877) 868-3833

New York Office:

14 Conselyea Street, Brooklyn, NY 11211

Name: Brian Cruz Title: Senior Account Manager

Email: bcruz@schooldude.com Phone: (877) 868-3833

7. Please provide contact information for the person(s) who will be responsible for the following areas, including resumes:

Corporate Address:	11000 Regency Parkway, Suite 110, Cary, North Carolina, 27518
Corporate Phone Number:	(877) 868-3833
Corporate Fax Number:	(800) 216-3063

Executive Team

Kent Hudson - Chief Executive Officer & Co-Founder
A technology veteran and dedicated entrepreneur, Dude Solutions co-founder Kent Hudson serves as Chief Executive Officer and Chairman of the Board. Since originally co-founding SchoolDude in 1999, Kent has been a driving force in the company's rapid growth and expansion as a leading software-as-a-service (SaaS) provider of operations management solutions. Kent has brought together a strong and talented team that has revolutionized the operations management industry and is consistently recognized as one of the fastest growing companies and best places to work in North Carolina's Triangle area. Prior to founding Dude Solutions, Kent spent 20+ years setting the strategic direction as CEO and president for organizations including Applied Computer Technologies (ACT) and INDUS International. Kent is a magna cum laude graduate from North Carolina State University's Chemical Engineering and Pulp and Paper Science and Technology programs.

Lee Prevost - Chief Strategy Officer & Co-Founder
A passionate and forward-thinking leader with nearly 30 years of experience in software and technology, Dude Solutions co-founder Lee Prevost serves as Chief Strategy Officer and a member of the board. Lee works closely with the executive team to set the vision, mission and strategies for Dude Solutions and is responsible for identifying growth opportunities that drive significant value across the company. He co-founded and launched SchoolDude with CEO Kent Hudson in 1999 and FacilityDude in 2007. Serving as SchoolDude's president for 15 years, Lee has been pivotal to developing Dude Solutions into an enterprise asset management leader. Prior to SchoolDude, he worked for Applied Computer Technologies (ACT) and Honeywell Home and Building Controls. Lee earned his Bachelor of Science degree in Electrical Engineering from North Carolina State University.

Tom Knox - Chief Revenue Officer
A results-oriented leader with a successful track record in pioneering new markets and revenue opportunities, Tom Knox serves as Dude Solutions' Chief Revenue Officer. Tom is responsible for integrating and aligning all Dude Solutions' revenue-related functions to drive profitable growth. As part of the team that founded FacilityDude, Tom has been integral to the growth and success of Dude Solutions. He served as president of FacilityDude for nearly a decade where he helped the company become a disruptive player and market leader. Tom's 30+ year executive career in the facility management and building automation industries includes previously serving as a vice president for Strategic Resource Solutions, a Carolina Power & Light subsidiary that today is a wholly owned subsidiary of Duke Energy, and president of Diversified Control Systems, Inc. Tom holds dual Bachelor of Arts degrees in Communication and Religion from Wake Forest University.

Brian Lora - Chief Technology Officer
An innovative and proven software architect and product development leader, Brian Lora serves as Dude Solutions' Chief Technology Officer. Brian is responsible for establishing and implementing Dude Solutions' aggressive Cloud/software-as-a-service (SaaS) product and software development roadmap as well as all IT, infrastructure and security support. He joined Dude Solutions from compliance and risk management software provider RegEd where he served as CIO/CTO. Previously, as the vice president of engineering and development for on-demand data protection services provider Arsenal Digital Solutions, Brian was the lead inventor for two SaaS architecture patents that were key to IBM's acquisition of the company in 2008. A frequent speaker at key technical and industry conferences, Brian has a Bachelor of Science degree in Chemical Engineering from North Carolina State University and is a member of the Strategic Advisory Board of North Carolina State University's Department of Computer Science.

Marc Moschetto - Chief Marketing Officer
A proven, technology marketing executive with 20+ years of experience and deep Cloud/software-as-a-service domain expertise, Marc Moschetto serves as Dude Solutions' Chief Marketing Officer. Marc is responsible for increasing Dude Solutions' brand visibility and driving demand generation via a strategic and comprehensive integrated marketing program. Previously, Marc served as vice president of global marketing for WorkForce Software where his strategic and tactical leadership helped to significantly increase the company's revenue and valuation. He also was a director of product marketing and corporate communications for HR management software provider Workscape, which was acquired by ADP. Marc, a frequent industry speaker and contributor to various business publications, is a cum laude graduate of Northeastern University's School of Journalism.

a. Sales

SchoolDude Sales Team Leaders are as follows:

Contact Name:	Herb Crawford
Contact Email:	herb@schooldude.com
Contact Title:	Director of Sales

Contact Name:	Scott Hair
Contact Email:	shair@schooldude.com
Contact Title:	Director of Sales

Contact Name:	Brad Hunter
Contact Email:	brad@schooldude.com
Contact Title:	Regional Manager

Contact Name:	Brian Holland
Contact Email:	brian@schooldude.com
Contact Title:	Regional Manager

Contact Name:	Bryan Coble
Contact Email:	bryan@schooldude.com
Contact Title:	Regional Manager

Contact Name:	Kim Wool
Contact Email:	kim@schooldude.com
Contact Title:	Regional Manager

Contact Name:	Grant Meiburg
Contact Email:	grant@schooldude.com
Contact Title:	Regional Manager

Contact Name:	Jesse Danner
Contact Email:	jesse@schooldude.com
Contact Title:	Regional Manager

b. Sales Support

Contact Name:	Lindsay Baskervill
Contact Title:	Sales Enablement & Operations
Contact Email:	lindsay.baskervill@schooldude.com

c. Marketing

Contact Name:	Nick Mirisis
Contact Title:	Director of Marketing
Contact Email:	Nick.mirisis@dudesolutions.com

d. Financial Reporting

Contact Name:	Darrin Dexter
Contact Title:	Financial Controller
Contact Email:	darrin.dexter@dudesolutions.com

e. Executive Support

Contact Name:	Sandy King
Contact Title:	Director of Sales Operations
Contact Email:	sandy.king@dudesolutions.com

8. Define your standard terms of payment.

   Payment terms are Net 30 days.

9. Who is your competition in the marketplace?

   SchoolDude is currently the #1 solution for educational facility management now serving over 7,000 educational clients and many states. We estimate that over the previous 4 years, 7 out of 10 educational institutions who decide to purchase a facility management solution have purchased SchoolDude.

10. Overall annual sales for last three (3) years; 2013, 2014, 2015

    - 2013 --- $9,216,293.34
    - 2014 --- $10,622,075.81
    - 2015 --- $18,553,746.50

11. Overall public sector sales, excluding Federal Government, for last three (3) years; 2013, 2014, 2015

    - 2013 --- $7,458,699.66
    - 2014 --- $8,438,238.29
    - 2015 --- $15,167,459.02

12. What is your strategy to increase market share?

Dude Solutions utilizes a combination of tradeshows, regional seminars, events and webcasts to highlight our solutions. We sell our solutions via a direct sales force and do not sell through other channels. Dude Solutions' solutions are available only from Dude Solutions.

13. What differentiates your company from competitors?

- **Designed for Education** – Unlike other providers, **SchoolDude offers the only online tools designed specifically for schools and universities**. The logic, the workflow, the processes and the language built into our tools meet the unique challenges of the education environment — making them intuitively easy to learn and use. That's why support staff, administrators, teachers, and technicians love us.

- **Market Leadership** – We are currently the **#1 solution for educational facility management now** serving over 7,000 educational clients and many states. We estimate that over the previous 4 years, 7 out of 10 educational institutions who decide to purchase a facility management solution have purchased SchoolDude.

- SchoolDude utilizes Software as a Service (SaaS) model which offers an **70%+ decrease in the total cost of ownership** compared to legacy systems.

- **Low Cost and Risk to Implement** – The infrastructure is already built and it's proven and operating at measured and logged **99.99% reliability factors**. SchoolDude has invested millions of dollars in backup procedures, system monitoring, redundancy, disaster recovery, security, and scale so that you don't have to.

- **Fast Implementation** – Up and running in just days or weeks, not months or years.

- **Integrated Suite** – Our integrated suite of on-demand solutions closely matches the requirements of the RFP and they work together. Other modules beyond the RFP scope are offered which can offer greater benefit and return on the initial investment.

- **The Support** – SchoolDude's legendary support is vital to the success of our clients. We strive for our clients to be successful rather than just satisfied. Our support team is dedicated to providing legendary support which is demonstrated by answering the phone by a live person each and every call, responding to 95% of all emails within 1 hour and providing unlimited training for our clients.

- **The Team** – The SchoolDude team has unmatched experience in providing innovative technology to educational institutions nationwide. Our expertise has guided us to build the application services that we know you need, but that you have rarely been able to provide in the past. Now, you can have technology, business and facility management applications that are managed in a secure and reliable environment with support and services from a technology partner that knows educational institutions. We have built our integrated suite of SaaS operations management services in an environment that allows us to provide you with unprecedented levels of service and reliability at an affordable price.

14. Describe your firm's capabilities and functionality of your on-line catalog/ordering website.

    Not available.

15. Describe your company's Customer Service Department (hours of operation, number of service centers, etc.)

    Dude Solutions Client Service Center is simply the best in the business, and we have a measured client satisfaction rating that exceeds 98%. Our policies require our toll free technical support hotline to be answered by a live person before the third ring, and our clients' issues should be resolved within two hours. Additionally, our clients receive unlimited toll free telephone technical support, as well as technical support via email or online chat. Also, there are no additional charges or support contracts. Our team has more experience than any team on the planet in serving you, the educational facilities professional. Our team has served over 7,000 client educational institutions helping to implement preventive maintenance, work order processing, help desk management, IT asset management and facility scheduling solutions.

    Dude Solutions subscriptions are renewable upon each year.

    There are no additional charges or support contracts. Our clients receive unlimited toll free telephone technical support, as well as technical support via email (96% of the email to support@SchoolDude.com is answered within 1 hour) or online chat.

    Hours of operation are Monday – Friday, 8am to 6pm EST. Toll-free number is 877-883-8337.

    Client Service Center Mission Statement

    "The Client Service Center is committed to empowering our clients by being readily available with personalized solutions to enhance their business processes. With our passion for service and client success, we strive to make Dude Solutions *the preferred choice of the educational facilities market."*

    Dude Solutions measures client services by subscription renewals, client satisfaction surveys and the Net Promoter Score. In 2007, 96% of existing Dude Solutions clients renewed their product subscriptions. In the spring of 2008 the Dude Solutions Client Service Center received and 98.6% client satisfaction rating. Over the last six years nearly 90% of Dude Solutions clients would recommend us to their peers (Net Promoter Score).

16. Provide information regarding if your firm, either presently or in the past, has been involved in any litigation, bankruptcy, or reorganization.

    None

Marketing / Sales

17. Detail how your organization plans to market this contract within the first 90 days of the award date. This should include, but not be limited to:

    a. A co-branded press release within first 30 days
    b. Announcement of award through any applicable social media sites
    c. Direct mail campaigns
    d. Co-branded collateral pieces
    e. Advertisement of contract in regional or national publications
    f. Participation in trade shows
    g. Dedicated TCPN internet web-based homepage with:
        i. TCPN and Region 4 ESC Logo
        ii. Link to TCPN and Region 4 ESC website
        iii. Summary of contract and services offered
        iv. Due Diligence Documents including; copy of solicitation, copy of contract and any amendments, marketing materials

    Dude Solutions utilizes a timed/multi-part introduction campaign when announcing a new partnership agreement. It is our goal to feature the new partner in all communications with the membership and communicate the value added benefits i.e. letter from the President/Executive Director outlining the new partnership with Dude Solutions, follow-up email from the President/Executive Director outlining the new partnership with Dude Solutions video and pertinent customized brochures attached. With partners who have direct phone numbers in their database, we can also deploy a customized/automated calling campaign featuring a recording by the President/Executive Director announcing the partnership agreement.

18. Describe how your company will demonstrate the benefits of this contract to eligible entities if awarded.

    Dude Solutions will utilize a marketing campaign with the membership and communicate the value added benefits.

19. Explain how your company plans to market this agreement to existing government customers.

    Dude Solutions utilizes regional seminars and customized partnership webcasts to highlight our solutions. Depending on membership demographics, a regional seminar can be conducted in multiple locations featuring an association representative and a Dude Solutions executive, who would provide an overview of the company, our philosophy, our commitment to the education marketplace, and the solutions we provide. Dude Solutions conducts a complete phone, fax, mail and email marketing program to promote these regional seminars. Customized webcasts are tools that allow Dude Solutions to demonstrate our solutions, features and functionality via a web demonstration. Interested members could view specific solutions tailored to their areas of need and ask questions in this interactive format. Dude Solutions conducts a complete phone, email and fax marketing program to promote these webcasts.

20. Provide a detailed 90-day plan describing how the contract will be implemented within your firm.

Dude Solutions is 100% dedicated to the unique needs of educational facilities. Dude Solutions is uniquely qualified as the partner of choice to do the hard work of marketing this program to TCPN member districts. It is likely that we are already involved in state conferences and organizations that overlap with the TCPN's affiliate presence which will substantially augment the TCPN's marketing challenge. In addition, Dude Solutions will provide the following additional TCPN specific marketing programs.

1) Send two co-authored mailings to each member district from Dude Solutions and the state level TCPN organization announcing the program and pricing. Dude Solutions will provide mailing and marketing expense and TCPN organizations will provide mailing lists.
2) Provide approximately six (6) free online seminars which outline the Dude Solutions offering through the TCPN affiliates with help from the TCPN affiliate in communicating the availability of these seminars through email communications from the TCPN affiliate.
3) Feature the availability of these offerings through TCPN affiliates in Dude Solutions trade show booths and on Dude Solutions website.
4) Work with each TCPN affiliate to provide content for TCPN affiliate websites and/or TCPN affiliate newsletters or marketing communications.
5) Provide speakers and conduct workshops at state level meetings as those meetings are conducted by TCPN affiliate organizations (e.g. CES annual facilities workshop).
6) Provide a presentation on Dude Solutions services to the representatives of the TCPN member organizations at national meetings of the TCPN.

In addition, Dude Solutions envisions that a post award brainstorming session will be conducted with the TCPN to determine other means of marketing and will consider these as those are discussed.

21. Describe how you intend on train your national sales force on the Region 4 ESC agreement.

Dude Solutions has worked with TCPN for nearly 10 years. During this relationship our staff has become very familiar with TCPN and its procedures, and TCPN staff with our procedures. As additional staff is add at the TCPN we commit to continuing the level of training we have maintained over the years.

22. Acknowledge that your organization agrees to provide its company logo(s) to Region 4 ESC and agrees to provide permission for reproduction of such logo in marketing communications and promotions.

Acknowledged

23. Provide the revenue that your organization anticipates each year for the first three (3) years of this agreement.

New Sales:
$650,000 in year one
$700,000 in year two
$750,000 in year three

Annual Renewals:
$4,000,000

Administration

24. Describe your company's implementation and success with existing cooperative purchasing programs, if any, and provide the cooperative's name(s), contact person(s) and contact information as reference(s).

SchoolDude's long history with TCPN should speak for itself and provide the best example of our implementation and success.

Other references if needed are provided below:

- Association of Educational Purchasing Agencies (AEPA)
  George Wilson (270) 451-5100

- Mohave Educational Services Cooperative, Inc. (MESC)
  Nancy Colbaugh (928) 718-3228

25. Describe the capacity of your company to report monthly sales through this agreement.

SchoolDude's long history with TCPN should speak for itself and provide the best example of our reporting capabilities.

Dude Solutions have the capacity to perform monthly reporting of sales and renewals thru the Director of Sales Operations.

26. Describe the capacity of your company to provide management reports, i.e. consolidated billing by location, time and attendance reports, etc. for each eligible agency.

SchoolDude's long history with TCPN should speak for itself and provide the best example of our reporting capabilities.

Dude Solutions can provide any type of report based on the requirements of this contract.

27. Please provide any suggested improvements and alternatives for doing business with your company that will make this arrangement more cost effective for your company and Participating Public Agencies.

SchoolDude has worked with TCPN for nearly 10 years. During this relationship our staff has become very familiar with TCPN and its procedures, and TCPN staff with our procedures. Our intention would be to continue as we have in the past.

Green Initiatives

- We're committed to helping to build a cleaner future! As our business grows, we want to make sure we minimize our impact on the Earth's climate. So we are taking every step we can to implement innovative and responsible environmental practices throughout Region 4 ESC to reduce our carbon footprint, reduce waste, promote energy conservation, ensure efficient computing, and much more. We would like Offerors to partner with us in this enterprise. To that effort, we ask Offerors to provide their companies environmental policy and/or green initiative.

28. Please provide your company's environmental policy and/or green initiative.

As part of our effort to help educational institutions across North America streamline operations with on-demand technology, Dude Solutions is also pleased to help our clients reduce their carbon footprints. Because Dude Solutions solutions are delivered over the Internet, our clients do not have to purchase and utilize additional servers to host our software applications, which reduce their CO2 emissions by 98%. This saves enough energy to power 591 homes annually and eliminates nearly 10.2 million pounds of CO2 emissions. By helping make our clients' operations more green, Dude Solutions is achieving the equivalent of planting 210,000 trees and removing 878 cars from our highways every year.

Offerror Certifications (if applicable)

- Provide a copy of all current licenses, registrations and certifications issued by federal, state and local agencies, and any other licenses, registrations or certifications from any other governmental entity with jurisdiction, allowing respondent to perform the covered services including, but not limited to licenses, registrations or certifications. Certifications can include applicable M/WBE, HUB, and manufacturer certifications for sales and service.

Not applicable

TAB 4 – PRODUCT / SERVICES

Appendix B:

PRODUCT / SERVICES SPECIFICATIONS

Region 4 Education Service Center (ESC 4) is seeking highly qualified supplier for **Facilities Management Software** on a national basis**.** Offerors must be able to accommodate a nationwide demand for products/services and to fulfill obligations as a nationwide Supplier. Vendor(s) shall, at the request of Region 4 ESC and/or member agencies, provide these covered products and associated services under the terms of this RFP and the CONTRACT TERMS AND CONDITIONS.

The intent of this solicitation is to establish a contract for a comprehensive product offering with the ability to provide eligible public agencies with multiple solutions to meet their needs.

Products and Services Summary Matrix – **Provide a matrix that will allow Region 4 to readily appraise your company's products and service offering versus other respondents. Provide a detailed description of each application.**

System Requirements – Please describe the infrastructure in order to support your proposed system including hardware, network infrastructure and personnel/skills required to support the system.

SYSTEM SPECIFICATIONS

Glossary of Terms

1. Administrative- Provides system administration functions such as security, system-wide defaults and the content of functions and forms.

2. Asset Management- Identifies, tracks, locates and analyzes physical assets.

3. Work Order Management- Controls work order processes for routine response and periodic preventive maintenance.

4. Materials Management- Streamlines parts and materials management by monitoring inventory.

5. Technology Work Management- This is a work order system for the instructional technology department.

6. Preventative Maintenance- Provides the functionality for users to establish preventative maintenance practices to meet their unique environments.

7. Budget Management- Automates budget setup and subsequent capture, monitoring control and analysis of expenditures associated with maintenance work.

8. Reports Generation- Reports are a key to any facility management system. This information may either be generated from the individual modules, from a single Reports Module or a combination.

9. Utility Management- Track, analyze and provide full reporting on all utilities.

10. Facility Scheduling- Allows the facility and business office personnel to coordinate the non-curricular events and activities in the school district.

11. Wireless/Mobile Management- Allows maintenance and operations professionals to receive and complete work in the field via a wireless/mobile device.

12. Trip Planning and Management- Streamlines the educational trip workflow process from request and approval to vehicle and driver scheduling.

13. Information Technology Asset Management- Streamlines all aspects of IT asset administration from monitoring and reporting to planning and life cycle costing.

Identify if the following topics are available within each specific system.

1. Administrative System

Topic	Available
Power user with full access from single log-in	Yes
Web access to administration	Yes
Multi-level security	Yes
Users functional permission level displayed	Yes
Provides help text and error messages	Yes
Permits multimedia file attachments (word files, graphic images, audio or video clips) to records as work orders	Yes

2. Asset System

Topic	Available
Provides graphical asset trees	No
Drop-down list of values for asset classification	Yes
Instant display of all assets, locations, classifications	Yes
Standard equipment templates	Yes
Allows warranty tracking	Yes
Lists outstanding jobs by equipment, asset class, location	Yes
Lifetime labor and material costs per equipment, asset classification and location	Yes
Tracks historic total of maintenance costs per asset	Yes

Comments: Deviation for “Provides graphical asset trees” above – SchoolDude application provides drop-down list of equipment listing by location. Graphical asset tress may become a future enhancement; but we make no promise in regards to delivery or agreement to do such.

3. Work Order Management

Topic	Available
Database of employees along with labor rate information	Yes
Database of vendors	Yes
Ability to capture labor hours, contract costs and material costs for each work order	Yes
Records equipment downtime	Yes
Charge multiple wage rates	Yes
Request dates and completion dates	Yes
Estimated and actual hours	Yes
Labor and material transactions for each work order	Yes
Work order tracking fields such as trade, purpose, budget and other codes	Yes
User-definable tracking fields	Yes
Easy interface to check work order status with selection masks	Yes
Search capacity on work order number or description key	Yes
Fully integrated with related systems including preventative maintenance, facility scheduling and inventory	Yes
Automatic computation of work costs using labor rates in employee system	Yes
The Work Order Management system will integrate with the school site request and Asset Management system	Yes
Track tool usage against work orders	Yes
Tracks required permitting	Yes
Re-open closed work orders	Yes

Comments: For “Tracks required permitting” above – Many SchoolDude users utilize the WO description field or file attachments functionality along with a purpose code in MaintenanceDirect. 2000 characters are available for notes areas. There are two 3MB attachments per work order.

4. Material Management

Topic	Available
Manage inventory items by category types: mechanical, custodial, tools and other	Yes
Tracks all inventory transactions, including issues, receipts, returns, adjustments, orders and transfers	Yes
Allows inventory to be issued to a location, pick list, project, work order or employee	Yes
Enables requestor the ability to select items from inventory catalogs and submit inventory requests online	Yes
Enables users to request quotes for inventory items from multiple suppliers while reordering	Yes
Tracks detailed information on inventory items, including unit of issue, on contract, supplier, average or fixed cost, tag number for tools, mark up and backorder quality	Yes
Allows inventory items to be stored and tracked in multiple pools and by crafts, including aisle, bin number and reorder points	Yes
Automatically emails requestors with inventory requests receipts and updates of order status changes	Yes
Integrates with the work order and preventative maintenance system	Yes
ISO certified units of measure	Yes
Provides pick lists	Yes
Optional parts inspection requirement per part	Yes

5. Technology Work Management

Topic	Available
Staff originates work order requests for IT problems	Yes
Status of work orders can be continually monitored by staff	Yes
System routes requests to proper technician using configurable work flow	Yes
The work order management provides for tracking of labor and parts for each incident	Yes
Warranty of technology items are continually monitored	Yes

6. Preventative Maintenance

Topic	Available
Schedule PM by elapsed days	Yes
Schedule PM by calendar date	Yes
Schedule PM by usage	Yes
View labor, material and tool cost for anticipated tasks	Yes
Tracks all scheduled maintenance	Yes
Creates recurring maintenance schedules on a daily, weekly, monthly or annual basis	Yes
Stores schedule templates for quick creation of frequently used schedule	Yes
Tracks equipment information, including manufacturer, model and serial numbers, in and out service dates and warranty	Yes
Automatically generates PM work orders through an integration with work order system	Yes
Displays upcoming scheduled work in a calendar format for resource scheduling	Yes

7. Budget Management

Topic	Available
Allows district to establish budget code format	Yes
Permits flexible budget terms and budget periods	Yes
Provides for flexible budget hierarchies	Yes
Analysis is provided for costs vs. budget per budget period and year-to-date	Yes
Facilitates the creation of long-range capital plans and budget plans	Yes
Manages capital projects and expenditures related to deferred maintenance, deficiencies and corrections	Yes

8. Reports Generation

Topic	Available
Category: Summary or detailed reports by _____	
Craft	Yes
Location	Yes
Budget	Yes
Employee	Yes
Craft cost analysis	Yes
Transactions	Yes
Outstanding work	Yes
Workloads and assignments	Yes
Status of work	Yes
Category: Standard Inventory Reports	
Summary or detailed reports by _____	
Issued inventory	Yes
Returned inventory	Yes

Transferred inventory	Yes
Supplier reports	Yes
Pick list reports	Yes
Category: Standard Preventative Maintenance Reports	
Summary or detailed reports by _____	
Projected parts and supplies reports	Yes
Estimated PM labor reports	Yes
Forecasting labor report	Yes
Corrective vs. preventative maintenance report	Yes
Category: Standard Facility Scheduling Reports	
Summary or detailed reports by _____	
Location	Yes
Organization	Yes
Schedules	Yes
Budget	Yes
Invoices	Yes
Reminders	Yes
Category: Standard Utility Reports _____	
Cost per Square ft	Yes
Use by building comparison	Yes
Cost by building comparison	Yes
Use/sq foot by building	Yes
Cost/sq foot by building	Yes
Energy savings report	Yes
Load factor report	Yes

9. Utility Tracking System

Topic	Available
Ability to manage all utilities including electric, gas, water, sewer, fuel oil, propane, trash, waste, telephone and other utilities	Yes
Tracks essential account, vendor building and user information	Yes
Tracks basic utility billing determinants on monthly bills for each account and/or meter including billing periods, billing period consumption, billing period cost and average period unit cost. Bills are to be tracked by month, year and building	Yes
Ability to track user-defined data such as hours of use, number of occupants, etc.	Yes
Provides use and cost budget function for monthly and annual budget analysis	Yes
Customizable user-defined advanced utility bill determinants including power factor, time-of-use, taxes, service charges and deregulated bill determinants	Yes
Performs current versus baseline comparisons including application of weather normalization for more accurate comparison of utility data from year to year. Weather normalization is performed by matching daily weather degree-days with actual billing periods of utility bills, Degree data is automatically uploaded into Utility Direct from the National Weather Service on a monthly basis	Yes
Easily exports data to any spreadsheet format	Yes
Provides virtual and sub-meter tracking. Sub-meter tracking will support internal organization chargeback requirements	Yes
Utility bill validity checking with multiple parameter analysis	Yes

10. Facility Scheduling System

Topic	Available
Multiple routing rules for event approval	Yes
Automatically routes usage request requests to approval managers	Yes
Database of areas available for after hour usage	Yes
Handle events with multiple dates with repeating patterns as well as random series of events	Yes
Tracks facility usage costs and automatically generates invoices	Yes
Enables event requesters to check facility availability and submit usage requests online	Yes
Displays scheduled events on calendar	Yes
Multiple levels of security	Yes
Email notifications to support personnel	Yes
Billing and rental administration	Yes

11. Wireless/Mobile Management

Topic	Available
Enables mobile workers to receive, process and complete work via a wireless/mobile device	Yes
Enables mobile workers to record transactions for labor hours	Yes
Enables mobile workers to search and sort and sort through their work orders	Yes

12. Trip Planning and Management

Topic	Available
Requesters can easily submit trip requests and check request status online	Yes
Automatically routes trip request to approval managers	Yes
Tracks availability and manages scheduling of vehicle and drivers	Yes
Displays scheduled trips on interactive calendar	Yes
Tracks all trip related costs	Yes

13. Information Technology Asset Management

Topic	Available
Gathers and reports information about computer assets on your network, including hardware, software and software utilization	Yes
Manages all computer assets across multiple platforms (Windows, Macintosh, Unix, Linux, Novell, etc)	Yes
Monitors assets at the component level and generates alerts for missing assets	Yes
Tracks licenses and usage for optimum license management and compliance	Yes
Generates alerts for software license agreement violations and unauthorized software installations	Yes

FacilityDude's solutions include:

a. **MaintenanceEdge** is a suite of four applications:
   - Work Order - Online work order management tool that streamlines your work order process, including request generation, completion status tracking, & reporting.
   - Planned Maintenance - Online planned maintenance scheduling tool that helps you create, assign, and manage recurring tasks.
   - Critical Alarm - Generates new work orders based on notifications from any intelligent building device.
   - Work Order Wireless - Work order management tool that enables maintenance crews to receive and complete tasks in the field.

b. **InventoryEdge** is a suite of two applications:
   - Inventory - Inventory management tool that streamlines the process of requesting, ordering, issuing, and tracking inventory items.
   - Inventory Wireless - Mobile inventory management application that improves the efficiency of your entire inventory process.

c. **Capital Forecast** - integrates with MaintenanceEdge bridging the gap between your capital planning and operational maintenance programs to enhance your overall facility management capabilities.

d. **UtilityTrac Plus** - UtilityTrac Plus is an affordable application that enables building owners to track, analyze, and report on utility consumption and cost.

TAB 5 – REFERENCES

Provide a minimum of ten (10) customer references for product and/or services of similar scope dating within the past 3 years. Please try to provide an equal number of references for K12, Higher Education and City/County entities. Provide the following information for each reference:

Entity Name:	Katy ISD
Contact Name and Title:	Kathy McDonald, Executive Director of M&O
City and State:	Katy, TX
Phone Number:	281-396-2501
Years Serviced:	10
Description of Services:	UD;FSD;PMD;CD;MD;ID;FSA
Annual Volume:	$72,347

Entity Name:	Conroe ISD
Contact Name and Title:	Marshall Schroeder, Director of M&O
City and State:	Conroe, TX
Phone Number:	936-703-7702
Years Serviced:	5
Description of Services:	UD;CT-AU;CD;CyU;CAA;FSD;ID;MD;PMD;FSA;CFD
Annual Volume:	$93,308

Entity Name:	Fort Bend ISD
Contact Name and Title:	David Moore, Director of Facilities
City and State:	Sugar Land, TX
Phone Number:	281-634-5562
Years Serviced:	12
Description of Services:	PMD;ID;MD;FSD;CD;CyU;FSA
Annual Volume:	$53,507

Entity Name:	Garland ISD
Contact Name and Title:	Jess Hudson, Executive Director of School Facilities
City and State:	Garland, TX
Phone Number:	972-494-8780
Years Serviced:	14
Description of Services:	UD;MD;PMD;FSD;CSD
Annual Volume:	$29,381

Entity Name:	Eanes ISD
Contact Name and Title:	Jeremy Trimble, Executive Director of Facilities & Operations
City and State:	Austin, TX
Phone Number:	512-732-9040
Years Serviced:	13
Description of Services:	UD;FSD;MD;PMD;PD;CD;FSA;CSD;CFD;UBAS
Annual Volume:	$28,078

Entity Name:	Lewisville ISD
Contact Name and Title:	Jason Hughes, Assistant Director of Maintenance
City and State:	Lewisville, TX
Phone Number:	469-713-5204
Years Serviced:	14
Description of Services:	UD;FSD;CD
Annual Volume:	$16,648

Entity Name:	Odessa College
Contact Name and Title:	Bryan Heifner, Director Facilities & Construction
City and State:	Odessa, TX
Phone Number:	432-335- 6512
Years Serviced:	12
Description of Services:	ITD;MD;FSD;PMD;CD
Annual Volume:	$12,548

Entity Name:	Abilene Christian University
Contact Name and Title:	Corey Ruff, Exec Dir Facilities & Campus Management
City and State:	Abilene, TX
Phone Number:	325-674-2665
Years Serviced:	9
Description of Services:	CrisisM;MD;PMD;CD;CFD
Annual Volume:	$18,384

Entity Name:	City of Pflugerville
Contact Name and Title:	Abby W., Admin Assistant for Public Works
City and State:	Pflugerville, TX
Phone Number:	512-251-9935
Years Serviced:	5
Description of Services:	MaintenanceEdge (ME)
Annual Volume:	$4,631

Entity Name:	Hood County
Contact Name and Title:	Tim Flower, Director of Maintenance
City and State:	Granbury, TX
Phone Number:	817-579-3214
Years Serviced:	7
Description of Services:	MaintenanceEdge (ME), InventoryEdge (IE)
Annual Volume:	$8,487

TAB 6 – PRICING

Appendix C:

PRICING

Electronic Price Lists

- Respondents must submit products, services, warranties, etc. in price list.
- Prices listed will be used to establish the extent of a manufacturer's product lines, services, warranties, etc. that are available from a particular offeror and the pricing per item.
- Services such as installation, delivery, tech support, training, and other services must be priced or listed as free in order to be offered on the contract. Unlisted services will not be accepted.
- Electronic price lists must contain the following: *(if applicable)*
    - Manufacturer part #
    - Vendor part # (if different from manufacturer part #)
    - Description
    - Manufacturers Suggested List Price and Net Price
    - Net price to Region 4 ESC (including freight)
- Media submitted for price list must include the respondents' company name, name of the solicitation, and date on Flash Drive (i.e. Pin or Jump Drives).
- ***Please submit price lists and/or catalogs in excel or delimited format only.***

Not to Exceed Pricing

- Region 4 ESC requests pricing be submitted as not to exceed for any participating entity.
- Unlike fixed pricing the awarded vendor can adjust submitted pricing lower if needed but, cannot exceed original pricing submitted for solicitation.
- Offeror must allow for lower pricing to be available for similar product and service purchases.
- This proposal process covers a wide range of institutions relative to square footage, number of sites and number of system users. Offeror is required to provide a price list that addresses the institutions being served by this solicitation. The price list should include, but not be limited to, software pricing, training, annual support, start up services, consulting services and ASP costs, if applicable. In order to evaluate the pricing and to assure that the price book is correctly interpreted, please provide a detailed pricing proposal for the following four (4) examples:

Please see attached ESC 4/TCPN SchoolDude Price Book and FacilityDude Price Book at the end of this proposal and on the flash drives.

Price Example	Number of Sites	Square Footage	Maintenance Staff	Requesters*	Number of Students
A	2	150,000	3	10 to 50	1,000

Example A: HealthCare, Government, Other (150,000 Square Footage)				
Item	**Initial Term (Annual Fee)**	**Startup/Training & Support (one-time charge)**	**Total Initial Term**	**Annual Renewal (2nd Term)**
MaintenanceEdge	$2,180.00	$1,400.00	$3,580.00	$2,289.00
InventoryEdge	$760.00	$540.00	$1,300.00	$798.00
Critical Alarm	$760.00	$540.00	$1,300.00	$798.00
Capital Forecast	$1,190.00	$850.00	$2,040.00	$1,249.50

Price Example	Number of Sites	Square Footage	Maintenance Staff	Requesters*	Number of Students
B	12	1,000,000	10	20 to 500	7,000

Example B: HealthCare, Government, Other (1,000,000 Square Footage)				
Item	**Initial Term (Annual Fee)**	**Startup/Training & Support (one-time charge)**	**Total Initial Term**	**Annual Renewal (2nd Term)**
MaintenanceEdge	$12,380.00	$5,870.00	$18,250.00	$12,999.00
InventoryEdge	$4,210.00	$2,200.00	$6,410.00	$4,420.50
Critical Alarm	$4,210.00	$2,200.00	$6,410.00	$4,420.50
Capital Forecast	$6,630.00	$3,470.00	$10,100.00	$6,961.50

Price Example	Number of Sites	Square Footage	Maintenance Staff	Requesters*	Number of Students
C	27	2,200,000	25	30 to 1,000	15,000

Example C: Public K-12 Education (15,000 Students)				
Item	Initial Term (Annual Fee)	Startup/Training & Support (one-time charge)	Total Initial Term	Annual Renewal (2nd Term)
Maintenance EssentialsPro	$14,345	$3,915	$18,260.00	$15,062.25
Critical Alarm Automation	$6,505	$3,336	$9,840.77	$6,830.25
InventoryDirect	$6,110	$2,440	$8,550.00	$6,415.50
CapitalForecast Direct	$7,160	$2,570	$9,730.00	$7,518.00
CrisisManager	$6,490	$1,180	$7,670.00	$6,814.50
CrisisManager Extended	$3,945	$525	$4,470.00	$4,142.25
EventEssentialsPro	$14,410	$4,205	$18,615.00	$15,130.50
FSAutomation	$7,630	$3,910	$11,540.00	$8,011.50
UtilityEssentials	$7,665	$1,650	$9,315.00	$8,048.25
TripDirect	$6,595	$2,690	$9,284.75	$6,924.49
Incident	$7,305	$2,420	$9,725.00	$7,670.25
Insight	$15,850	$5,820	$21,670.00	$16,642.50
Connect GIS	$6,600.00	$2,310.00	$8,910.00	$6,930.00

Price Example	Number of Sites	Square Footage	Maintenance Staff	Requesters*	Number of Students
D	48	4,500,000	55	75 to 2,000	30,000

Example D: Public K-12 Education (30,000 Students)				
Item	Initial Term (Annual Fee)	Startup/Training & Support (one-time charge)	Total Initial Term	Annual Renewal (2nd Term)
Maintenance EssentialsPro	$24,360	$8,960	$33,320.00	$25,578.00
Critical Alarm Automation	$9,695	$4,973	$14,667.69	$10,179.75
InventoryDirect	$9,100	$5,580	$14,680.00	$9,555.00
CapitalForecast Direct	$10,750	$5,945	$16,695.00	$11,287.50
CrisisManager	$9,675	$1,840	$11,515.00	$10,158.75
CrisisManager Extended	$5,735	$630	$6,365.00	$6,021.75
EventEssentialsPro	$22,265	$7,790	$30,055.25	$23,378.51
FSAutomation	$11,455	$5,875	$17,329.62	$12,027.75
UtilityEssentials	$9,080	$1,865	$10,945.00	$9,534.00
TripDirect	$9,915	$6,005	$15,920.00	$10,410.75
Incident	$10,960	$5,945	$16,905.00	$11,508.00
Insight	$23,840	$12,770	$36,610.00	$25,032.00
Connect GIS	$9,000.00	$3,150.00	$12,150.00	$9,450.00

Enhancement and Upgrade Policy – Provide a clear description of the upgrade and enhancement policies for all applications proposed. Clearly state the policy going forward relative to both the Offeror selling price and the total cost to the application owner for upgrades and enhancements.

Dude Solutions applications are on a constant "Evergreen" schedule of enhancements and new features as well as new applications. Being a hosted application, enhancements are easily distributed to Dude Solutions users upon completion vs. the traditional method of installing a CD and upgrading a database onsite on a client's server. Ideas for these enhancements are derived from our clients and their needs to streamline processes or more effectively perform their day-to-day tasks.

Dude Solutions enhancement policies include:

- Allocation of a minimum of 25% of available development resources towards existing products (as opposed to new products). Dude Solutions has allocated approximately 30% of existing resources to existing product enhancements in the past 24 months.
- Enhancement priority and schedule is managed by the Business Unit Teams who fields enhancement requests submitted to the Dude Solutions Client Services Center by email, online chat, or by phone. Priority is determined by a combination of frequency of request, difficulty to deliver, how it affects other clients, and value to other clients. As all of our clients are educational clients, most requests benefit all of our clients. System fixes have a higher priority than enhancements and are usually handled within 48 hours.
- Dude Solutions publishes notification of upgrades, planned maintenance outages (typically weekends or at night); enhancements on Dude Solutions website and in email notifications to Dude Solutions client system administrators.
- On average, each Dude Solutions application is enhanced twice monthly.
- All enhancements are included in Dude Solutions annual fees.
- Dude Solutions clients enjoy these enhancements without having to download software, install updates, or load patches.

Dude Solutions upgrade policy includes:

- Major upgrades are scheduled 1-2 times annually for each product.
- Major upgrades are driven by client input and are generally further defined with client focus groups through concurrent online design review sessions where clients review and critique the upcoming enhancement prior to general release.
- Major upgrades are included in Dude Solutions annual fees.
- Dude Solutions clients enjoy these upgrades without having to download software, install updates, or load patches.
- Additional training is provided in group online formats as needed to train system administrators on how to take advantage of new functionality.

Ongoing enhancements and upgrades are provided for **NO ADDITIONAL COST** and are included in Dude Solutions annual fees. In addition, Dude Solutions clients do not have to install anything or update local systems to enjoy these upgrades and enhancements.

Our team is always improving services to the client. A few examples of that are: Unlimited Support by phone, email, or through live chat. Continuous enhancement process based on client input. Access to Dude Solutions annual "Dude University" conference and training program (nominal tuition fee required.) 24 x 7 application monitoring. Continuous firewall and virus protection.

TAB 7 – VALUE ADD

Please include any additional products and/or services not included in the scope of the solicitation that you think will enhance and/or add value to this contract for participating agencies. Your marketing plan and salesforce training plan as detailed in Appendix F will also be taken into account when evaluating your company's value add score.

Any additional products or services offered in this section will only be considered by Region 4 ESC if auditable pricing is offered for them in Appendix C. Any products or services for which pricing is not offered will not be considered a part of any contract awarded as a result of this RFP.

All products or services offered in this section are subject to the same requirements as products offered in Appendix B. Respondents must provide detailed descriptions of any additional products and services being offered as a part of their proposal, and Region 4 ESC reserves the right to reject any value add products or services which it deems to be unrelated to the scope of this RFP.

Dude University™ is the nation's largest career development and professional training conference exclusively for school, college and university operations professionals.

The Dude University curriculum is designed to provide professional development for educational professionals in all areas of operations, including maintenance, business, facilities, technology and transportation.

Some quick highlights:

- **Sessions** – Design your own conference schedule to fit your professional development needs! All sessions are created to address the areas of interest that most affect you in your specific job role.
- **Learning Lab** – A hands-on product training area filled with more than 70 computers and staffed by SchoolDude's Client Services Team - they're the Buckaroos of Software! The Learning Lab will be open throughout the entire conference for you to become more acquainted with the SchoolDude products you currently own, or to try out new ones.
- **Networking** – Knock elbows with peers and leaders alike. Dude Ranch features many networking activities before and during the 5-day event. Get to know your neighbors. Let the success of others in similar situations be your inspiration.

Learn more at https://university.dudesolutions.com/

TAB 8 – REQUIRED DOCUMENTS

Appendix H:

ADDITIONAL REQUIRED DOCUMENTS

DOC #1	Clean Air and Water Act
DOC #2	Debarment Notice
DOC #3	Lobbying Certification
DOC #4	Contractors Requirements
DOC #5	Antitrust Certification Statement
DOC #6	Implementation HB 1295 (Certificate) of Interested Parties)
DOC #7	EDGAR Certifications
	FOR OFFERORS INTENDING TO DO BUSINESS IN NEW JERSEY:
DOC #8	Ownership Disclosure Form
DOC #9	Non-Collusion Affidavit
DOC #10	Affirmative Action Affidavit
DOC #11	Political Contribution Disclosure Form
DOC #12	Stockholder Disclosure Form

New Jersey Offerors are also required to comply with the following New Jersey statutes when applicable:

All anti-discrimination laws, including those contained in N.J.S.A. 10:2-1 through N.J.S.A. 10:2-14, N.J.S.A. 10:5-1, and N.J.S.A. 10:5-31 through 10:5-38.

Compliance with Prevailing Wage Act, N.J.S.A. 34:11-56.26, for all contracts within the contemplation of the Act.

Compliance with Public Works Contractor Registration Act, N.J.S.A. 34:11-56.26

Bid and Performance Security, as required by the applicable municipal or state statutes.

DOC #1

Clean Air and Water Act

I, the Offeror, am in compliance with all applicable standards, orders or regulations issued pursuant to the Clean Air Act of 1970, as Amended (42 U.S. C. 1857 (h), Section 508 of the Clean Water Act, as amended (33 U.S.C. 1368), Executive Order 117389 and Environmental Protection Agency Regulation, 40 CFR Part 15 as required under OMB Circular A-102, Attachment O, Paragraph 14 (1) regarding reporting violations to the grantor agency and to the United States Environment Protection Agency Assistant Administrator for the Enforcement.

Potential Offeror: Dude Solutions, Inc._____

Title of Authorized Representative: SVP of Sales_____

Mailing Address: 11000 Regency Parkway, Suite 110, Cary, NC 27518_____

Signature: _____

DOC #2

Debarment Notice

I, the Offeror, certify that my company has not been debarred, suspended or otherwise ineligible for participation in Federal Assistance programs under Executive Order 12549, "Debarment and Suspension", as described in the Federal Register and Rules and Regulations.

Potential Offeror: Dude Solutions, Inc._____

Title of Authorized Representative: SVP of Sales_____

Mailing Address: 11000 Regency Parkway, Suite 110, Cary, NC 27518_____

Signature: _____

DOC #3

LOBBYING CERTIFICATION

Submission of this certification is a prerequisite for making or entering into this transaction and is imposed by Section 1352, Title 31, U.S. Code. This certification is a material representation of fact upon which reliance was placed when this transaction was made or entered into. Any person who fails to file the required certification shall be subject to civil penalty of not less than $10,000 and not more than $100,000 for each such failure.

The undersigned certifies, to the best of his/her knowledge and belief, that:

1. No Federal appropriated funds have been paid or will be paid on behalf of the undersigned,
   to any person for influencing or attempting to influence an officer or employee of any agency, a Member of Congress, an officer or employee of Congress, or an employee of a Member of Congress in connection with the awarding of a Federal contract, the making of a Federal grant, the making of a Federal loan, the entering into a cooperative agreement, and the extension, continuation, renewal, amendment, or modification of a Federal contract, grant, loan, or cooperative agreement.

2. If any funds other than Federal appropriated funds have been or will be paid to any person for influencing or attempting to influence an officer or employee of any agency, a Member of Congress, an officer or employee of Congress, or an employee of a Member of Congress in connection with this Federal contract or cooperative agreement, the undersigned shall complete and submit Standard Form LLL, "Disclosure of Lobbying Activities," in accordance with its instructions.

3. The undersigned shall require that the language of this certification be included in the award documents for all covered sub-awards exceeding $100,000 in Federal funds at all appropriate tiers and that all sub-recipients shall certify and disclose accordingly.

Signature of Offeror

11/11/16
Date

DOC #4 CONTRACTOR CERTIFICATION REQUIREMENTS

Contractor's Employment Eligibility

By entering the contract, Contractor warrants compliance with the Federal Immigration and Nationality Act (FINA), and all other federal and state immigration laws and regulations. The Contractor further warrants that it is in compliance with the various state statues of the states it is will operate this contract in.

Participating Government Entities including School Districts may request verification of compliance from any Contractor or subcontractor performing work under this Contract. These Entities reserve the right to confirm compliance in accordance with applicable laws.

Should the Participating Entities suspect or find that the Contractor or any of its subcontractors are not in compliance, they may pursue any and all remedies allowed by law, including, but not limited to: suspension of work, termination of the Contract for default, and suspension and/or debarment of the Contractor. All costs necessary to verify compliance are the responsibility of the Contractor.

The offeror complies and maintains compliance with the appropriate statutes which requires compliance with federal immigration laws by State employers, State contractors and State subcontractors in accordance with the E-Verify Employee Eligibility Verification Program.

Contractor shall comply with governing board policy of the Region 4 ESC Participating entities in which work is being performed.

Fingerprint and Background Checks

If required to provide services on school district property at least five (5) times during a month, contractor shall submit a full set of fingerprints to the school district if requested of each person or employee who may provide such service. Alternately, the school district may fingerprint those persons or employees. An exception to this requirement may be made as authorized in Governing Board policy. The district shall conduct a fingerprint check in accordance with the appropriate state and federal laws of all contractors, subcontractors or Offerors and their employees for which fingerprints are submitted to the district. Contractor, subcontractors, Offerors and their employees shall not provide services on school district properties until authorized by the District.

The offeror shall comply with fingerprinting requirements in accordance with appropriate statutes in the state in which the work is being performed unless otherwise exempted.

Contractor shall comply with governing board policy in the school district or Participating Entity in which work is being performed.

Business Operations in Sudan, Iran

In accordance with A.R.S. 35-391 and A.R.S. 35-393, the Contractor hereby certifies that the contractor does not have scrutinized business operations in Sudan and/or Iran.

Signature of Offeror

11/11/16

Date

DOC #5 **ANTITRUST CERTIFICATION STATEMENTS**
(Tex. Government Code § 2155.005)

I affirm under penalty of perjury of the laws of the State of Texas that:

1. I am duly authorized to execute this contract on my own behalf or on behalf of the company, corporation, firm, partnership or individual (Company) listed below;

2. In connection with this proposal, neither I nor any representative of the Company has violated any provision of the Texas Free Enterprise and Antitrust Act, Tex. Bus. & Comm. Code Chapter 15;

3. In connection with this proposal, neither I nor any representative of the Company has violated any federal antitrust law; and

4. Neither I nor any representative of the Company has directly or indirectly communicated any of the contents of this proposal to a competitor of the Company or any other company, corporation, firm, partnership or individual engaged in the same line of business as the Company.

Offeror Dude Solutions, Inc._____

_____

_____

Address11000 Regency Parkway, Suite 110____

Cary, NC 27518 _____

_____

Phone (877) 868-3833_____

Fax (800) 216-3063_____

Offeror _____
Signature

Scott V. Carpenter
Printed Name

SVP of Sales
Position with Company

Authorizing Official

_____
Signature

_____
Printed Name

_____
Position with Company

Implementation of House Bill 1295

Certificate of Interested Parties (Form 1295):

In 2015, the Texas Legislature adopted House Bill 1295, which added section 2252.908 of the Government Code. The law states that a governmental entity or state agency may not enter into certain contracts with a business entity unless the business entity submits a disclosure of interested parties to the governmental entity or state agency at the time the business entity submits the signed contract to the governmental entity or state agency. The law applies only to a contract of a governmental entity or state agency that either (1) requires an action or vote by the governing body of the entity or agency before the contract may be signed or (2) has a value of at least $1 million. The disclosure requirement applies to a contract entered into on or after January 1, 2016.

The Texas Ethics Commission was required to adopt rules necessary to implement that law, prescribe the disclosure of interested parties form, and post a copy of the form on the commission's website. The commission adopted the Certificate of Interested Parties form (Form 1295) on October 5, 2015. The commission also adopted new rules (Chapter 46) on November 30, 2015, to implement the law. The commission does not have any additional authority to enforce or interpret House Bill 1295.

Filing Process:

Staring on January 1, 2016, the commission will make available on its website a new filing application that must be used to file Form 1295. A business entity must use the application to enter the required information on Form 1295 and print a copy of the completed form, which will include a certification of filing that will contain a unique certification number. An authorized agent of the business entity must sign the printed copy of the form and have the form notarized. The completed Form 1295 with the certification of filing must be filed with the governmental body or state agency with which the business entity is entering into the contract.

The governmental entity or state agency must notify the commission, using the commission's filing application, of the receipt of the filed Form 1295 with the certification of filing not later than the 30th day after the date the contract binds all parties to the contract. The commission will post the completed Form 1295 to its website within seven business days after receiving notice from the governmental entity or state agency.

Information regarding how to use the filing application will be available on this site starting on January 1, 2016.

https://www.ethics.state.tx.us/whatsnew/elf_info_form1295.htm

Last Revision: February 16, 2016

CERTIFICATE OF INTERESTED PARTIES

FORM 1295

Complete Nos. 1 - 4 and 6 if there are interested parties.
Complete Nos. 1, 2, 3, 5, and 6 if there are no interested parties.

OFFICE USE ONLY
CERTIFICATION OF FILING

Certificate Number:
2016-134339

Date Filed:
11/08/2016

Date Acknowledged:

1 Name of business entity filing form, and the city, state and country of the business entity's place of business.

Dude Solutions, Inc.
Cary, NC United States

2 Name of governmental entity or state agency that is a party to the contract for which the form is being filed.

Region 4 Education Service Center

3 Provide the identification number used by the governmental entity or state agency to track or identify the contract, and provide a description of the services, goods, or other property to be provided under the contract.

TCPN Solicitation 16-18
cloud-based operations software

4 Name of Interested Party	City, State, Country (place of business)	Nature of interest (check applicable)	
		Controlling	Intermediary
Prevost, Lee	Cary, NC United States	X	
Hudson, Kent	Cary, NC United States	X	

5 Check only if there is NO Interested Party. ☐

6 AFFIDAVIT

I swear, or affirm, under penalty of perjury, that the above disclosure is true and correct.

Signature of authorized agent of contracting business entity

AFFIX NOTARY STAMP/SEAL ABOVE

LINDA P LOWERY NOTARY PUBLIC HARNETT COUNTY, N.C.

Sworn to and subscribed before me, by the said Scott Carpenter, this the 11 day of November, 20 16, to certify which, witness my hand and seal of office.

Signature of officer administering oath	Printed name of officer administering oath	Title of officer administering oath
Linda P Lowery	Linda P Lowery	Notary

Notary

Forms provided by Texas Ethics Commission www.ethics.state.tx.us Version V1.0.277

DOC #7

EDGAR CERTIFICATIONS

ADDENDUM FOR AGREEMENT FUNDED BY U.S. FEDERAL GRANT

TO WHOM IT MAY CONCERN:

REGION 4 EDUCATION SERVICE CENTER is in the process of ensuring that all policies and procedures involving the expenditure of federal funds are compliant with the new Education Department General Administrative Guidelines ("EDGAR"). Part of this process involves ensuring that all current Offerors agree to comply with EDGAR. You must complete this form and return to REGION 4 EDUCATION SERVICE CENTER along with you proposal.

The following certifications and provisions are required and apply when REGION 4 EDUCATION SERVICE CENTER expends federal funds for any contract resulting from this procurement process. Pursuant to 2 C.F.R. § 200.326, all contracts, including small purchases, awarded by the Agency and the Agency's subcontractors shall contain the procurement provisions of Appendix II to Part 200, as applicable.

REQUIRED CONTRACT PROVISIONS FOR NON-FEDERAL ENTITY CONTRACTS UNDER FEDERAL AWARDS
APPENDIX II TO 2 CFR PART 200

(A) Contracts for more than the simplified acquisition threshold currently set at $150,000, which is the inflation adjusted amount determined by the Civilian Agency Acquisition Council and the Defense Acquisition Regulations Council (Councils) as authorized by 41 U.S.C. 1908, must address administrative, contractual, or legal remedies in instances where contractors violate or breach contract terms, and provide for such sanctions and penalties as appropriate.

Pursuant to Federal Rule (A) above, when REGION 4 EDUCATION SERVICE CENTER expends federal funds, REGION 4 EDUCATION SERVICE CENTER reserves all rights and privileges under the applicable laws and regulations with respect to this procurement in the event of breach of contract by either party.

Does Offeror agree? YES SNC Initials of Authorized Representative of Offeror

(B) Termination for cause and for convenience by the grantee or sub grantee including the manner by which it will be effected and the basis for settlement. (All contracts in excess of $10,000)

Pursuant to Federal Rule (B) above, when REGION 4 EDUCATION SERVICE CENTER expends federal funds, REGION 4 EDUCATION SERVICE CENTER reserves the right to immediately terminate any agreement in excess of $10,000 resulting from this procurement process in the event of a breach or default of the agreement by Offeror in the event Offeror fails to: (1) meet schedules, deadlines, and/or delivery dates within the time specified in the procurement solicitation, contract, and/or a purchase order; (2) make any payments owed; or (3) otherwise perform in accordance with the contract and/or the procurement solicitation. REGION 4 EDUCATION SERVICE CENTER also reserves the right to terminate the contract immediately, with written notice to Offeror, for convenience, if REGION 4 EDUCATION SERVICE CENTER believes, in its sole discretion that it is in the best interest of REGION 4 EDUCATION SERVICE CENTER to do so. Offeror will be compensated for work performed and accepted and goods accepted by REGION 4 EDUCATION SERVICE CENTER as of the termination date if the contract is terminated for convenience of REGION 4 EDUCATION SERVICE CENTER. Any award under this procurement process is not exclusive and REGION 4 EDUCATION SERVICE CENTER reserves the right to purchase goods and services from other Offerors when it is in REGION 4 EDUCATION SERVICE CENTER's best interest.

Does Offeror agree? YES SNC Initials of Authorized Representative of Offeror

(C) Equal Employment Opportunity. Except as otherwise provided under 41 CFR Part 60, all contracts that meet the definition of "federally assisted construction contract" in 41 CFR Part 60-1.3 must include the equal opportunity clause provided under 41 CFR 60-1.4(b), in accordance with Executive Order 11246, "Equal Employment Opportunity" (30 FR 12319, 12935, 3 CFR Part, 1964-1965 Comp., p. 339), as amended by Executive Order 11375, "Amending Executive Order 11246 Relating to Equal Employment Opportunity," and implementing regulations at 41 CFR part 60, "Office of Federal Contract Compliance Programs, Equal Employment Opportunity, Department of Labor."

Pursuant to Federal Rule (C) above, when REGION 4 EDUCATION SERVICE CENTER expends federal funds on any federally assisted construction contract, the equal opportunity clause is incorporated by reference herein.

Does Offeror agree to abide by the above? YES SVC Initials of Authorized Representative of Offeror

(D) Davis-Bacon Act, as amended (40 U.S.C. 3141-3148). When required by Federal program legislation, all prime construction contracts in excess of $2,000 awarded by non-Federal entities must include a provision for compliance with the Davis-Bacon Act (40 U.S.C. 3141-3144, and 3146-3148) as supplemented by Department of Labor regulations (29 CFR Part 5, "Labor Standards Provisions Applicable to Contracts Covering Federally Financed and Assisted Construction"). In accordance with the statute, contractors must be required to pay wages to laborers and mechanics at a rate not less than the prevailing wages specified in a wage determination made by the Secretary of Labor. In addition, contractors must be required to pay wages not less than once a week. The non-Federal entity must place a copy of the current prevailing wage determination issued by the Department of Labor in each solicitation. The decision to award a contract or subcontract must be conditioned upon the acceptance of the wage determination. The non- Federal entity must report all suspected or reported violations to the Federal awarding agency. The contracts must also include a provision for compliance with the Copeland "Anti-Kickback" Act (40 U.S.C. 3145), as supplemented by Department of Labor regulations (29 CFR Part 3, "Contractors and Subcontractors on Public Building or Public Work Financed in Whole or in Part by Loans or Grants from the United States"). The Act provides that each contractor or sub recipient must be prohibited from inducing, by any means, any person employed in the construction, completion, or repair of public work, to give up any part of the compensation to which he or she is otherwise entitled. The non-Federal entity must report all suspected or reported violations to the Federal awarding agency.

Pursuant to Federal Rule (D) above, when REGION 4 EDUCATION SERVICE CENTER expends federal funds during the term of an award for all contracts and sub grants for construction or repair, Offeror will be in compliance with all applicable Davis-Bacon Act provisions.

Does Offeror agree? YES SVC Initials of Authorized Representative of Offeror

(E) Contract Work Hours and Safety Standards Act (40 U.S.C. 3701-3708). Where applicable, all contracts awarded by the non-Federal entity in excess of $100,000 that involve the employment of mechanics or laborers must include a provision for compliance with 40 U.S.C. 3702 and 3704, as supplemented by Department of Labor regulations (29 CFR Part 5). Under 40 U.S.C. 3702 of the Act, each contractor must be required to compute the wages of every mechanic and laborer on the basis of a standard work week of 40 hours. Work in excess of the standard work week is permissible provided that the worker is compensated at a rate of not less than one and a half times the basic rate of pay for all hours worked in excess of 40 hours in the work week. The requirements of 40 U.S.C. 3704 are applicable to construction work and provide that no laborer or mechanic must be required to work in surroundings or under working conditions which are unsanitary, hazardous or dangerous. These requirements do not apply to the purchases of supplies or materials or articles ordinarily available on the open market, or contracts for transportation or transmission of intelligence.

Pursuant to Federal Rule (E) above, when REGION 4 EDUCATION SERVICE CENTER expends federal funds, Offeror certifies that Offeror will be in compliance with all applicable provisions of the Contract Work Hours and Safety Standards Act during the term of an award for all contracts by REGION 4 EDUCATION SERVICE CENTER resulting from this procurement process.

Does Offeror agree? YES SVC Initials of Authorized Representative of Offeror

(F) Rights to Inventions Made Under a Contract or Agreement. If the Federal award meets the definition of "funding agreement" under 37 CFR §401.2 (a) and the recipient or sub recipient wishes to enter into a contract with a small business firm or nonprofit organization regarding the substitution of parties, assignment or performance of experimental, developmental, or research work under that "funding agreement," the recipient or sub recipient must comply with the requirements of 37 CFR Part 401, "Rights to Inventions Made by Nonprofit Organizations and Small Business Firms Under Government Grants, Contracts and Cooperative Agreements," and any implementing regulations issued by the awarding agency.

Pursuant to Federal Rule (F) above, when federal funds are expended by REGION 4 EDUCATION SERVICE CENTER, the Offeror certifies that during the term of an award for all contracts by REGION 4 EDUCATION SERVICE CENTER resulting from this procurement process, the Offeror agrees to comply with all applicable requirements as referenced in Federal Rule (F) above.

Does Offeror agree? YES SVC Initials of Authorized Representative of Offeror

(G) Clean Air Act (42 U.S.C. 7401-7671q.) and the Federal Water Pollution Control Act (33 U.S.C. 1251-1387), as amended—Contracts and sub grants of amounts in excess of $150,000 must contain a provision that requires the non- Federal award to

agree to comply with all applicable standards, orders or regulations issued pursuant to the Clean Air Act (42 U.S.C. 7401-7671q) and the Federal Water Pollution Control Act as amended (33 U.S.C. 1251- 1387). Violations must be reported to the Federal awarding agency and the Regional Office of the Environmental Protection Agency (EPA).

Pursuant to Federal Rule (G) above, when federal funds are expended by REGION 4 EDUCATION SERVICE CENTER, the Offeror certifies that during the term of an award for all contracts by REGION 4 EDUCATION SERVICE CENTER member resulting from this procurement process, the Offeror agrees to comply with all applicable requirements as referenced in Federal Rule (G) above.

Does Offeror agree? YES SVC Initials of Authorized Representative of Offeror

(H) Debarment and Suspension (Executive Orders 12549 and 12689)—A contract award (see 2 CFR 180.220) must not be made to parties listed on the government wide exclusions in the System for Award Management (SAM), in accordance with the OMB guidelines at 2 CFR 180 that implement Executive Orders 12549 (3 CFR part 1986 Comp., p. 189) and 12689 (3 CFR part 1989 Comp., p. 235), "Debarment and Suspension." SAM Exclusions contains the names of parties debarred, suspended, or otherwise excluded by agencies, as well as parties declared ineligible under statutory or regulatory authority other than Executive Order 12549.

Pursuant to Federal Rule (H) above, when federal funds are expended by REGION 4 EDUCATION SERVICE CENTER, the Offeror certifies that during the term of an award for all contracts by REGION 4 EDUCATION SERVICE CENTER resulting from this procurement process, the Offeror certifies that neither it nor its principals are presently debarred, suspended, proposed for debarment, declared ineligible, or voluntarily excluded from participation by any federal department or agency.

Does Offeror agree? YES SVC Initials of Authorized Representative of Offeror

(I) Byrd Anti-Lobbying Amendment (31 U.S.C. 1352)—Contractors that apply or bid for an award exceeding $100,000 must file the required certification. Each tier certifies to the tier above that it will not and has not used Federal appropriated funds to pay any person or organization for influencing or attempting to influence an officer or employee of any agency, a member of Congress, officer or employee of Congress, or an employee of a member of Congress in connection with obtaining any Federal contract, grant or any other award covered by 31 U.S.C. 1352. Each tier must also disclose any lobbying with non-Federal funds that takes place in connection with obtaining any Federal award. Such disclosures are forwarded from tier to tier up to the non-Federal award.

Pursuant to Federal Rule (I) above, when federal funds are expended by REGION 4 EDUCATION SERVICE CENTER, the Offeror certifies that during the term and after the awarded term of an award for all contracts by REGION 4 EDUCATION SERVICE CENTER resulting from this procurement process, the Offeror certifies that it is in compliance with all applicable provisions of the Byrd Anti-Lobbying Amendment (31 U.S.C.
1352). The undersigned further certifies that:
(1) No Federal appropriated funds have been paid or will be paid for on behalf of the undersigned, to any person for influencing or attempting to influence an officer or employee of any agency, a Member of Congress, an
officer or employee of congress, or an employee of a Member of Congress in connection with the awarding
of a Federal contract, the making of a Federal grant, the making of a Federal loan, the entering into a cooperative agreement, and the extension, continuation, renewal, amendment, or modification of a Federal contract, grant, loan, or cooperative agreement.
(2) If any funds other than Federal appropriated funds have been paid or will be paid to any person for influencing or attempting to influence an officer or employee of any agency, a Member of Congress, an officer or employee of congress, or an employee of a Member of Congress in connection with this Federal grant or cooperative agreement, the undersigned shall complete and submit Standard Form-LLL, "Disclosure Form to Report Lobbying", in accordance with its instructions.
(3) The undersigned shall require that the language of this certification be included in the award documents for all covered sub-awards exceeding $100,000 in Federal funds at all appropriate tiers and that all sub recipients shall certify and disclose accordingly.

Does Offeror agree? YES SVC Initials of Authorized Representative of Offeror

RECORD RETENTION REQUIREMENTS FOR CONTRACTS INVOLVING FEDERAL FUNDS

When federal funds are expended by REGION 4 EDUCATION SERVICE CENTER for any contract resulting from this procurement process, Offeror certifies that it will comply with the record retention requirements detailed in 2 CFR § 200.333. The Offeror further

certifies that Offeror will retain all records as required by 2 CFR § 200.333 for a period of three years after grantees or sub grantees submit final expenditure reports or quarterly or annual financial reports, as applicable, and all other pending matters are closed.

Does Offeror agree? YES SVC Initials of Authorized Representative of Offeror

CERTIFICATION OF COMPLIANCE WITH THE ENERGY POLICY AND CONSERVATION ACT

When REGION 4 EDUCATION SERVICE CENTER expends federal funds for any contract resulting from this procurement process, Offeror certifies that it will comply with the mandatory standards and policies relating to energy efficiency which are contained in the state energy conservation plan issued in compliance with the Energy Policy and Conservation Act (42 U.S.C. 6321 et seq.; 49 C.F.R. Part 18).

Does Offeror agree? YES SVC Initials of Authorized Representative of Offeror

CERTIFICATION OF COMPLIANCE WITH BUY AMERICA PROVISIONS

Offeror certifies that Offeror is in compliance with all applicable provisions of the Buy America Act. Purchases made in accordance with the Buy America Act must still follow the applicable procurement rules calling for free and open competition.

Does Offeror agree? YES SVC Initials of Authorized Representative of Offeror

CERTIFICATION OF ACCESS TO RECORDS – 2 C.F.R. § 200.336

Offeror agrees that the Inspector General of the Agency or any of their duly authorized representatives shall have access to any books, documents, papers and records of Offeror that are directly pertinent to Offeror's discharge of its obligations under the Contract for the purpose of making audits, examinations, excerpts, and transcriptions. The right also includes timely and reasonable access to Offeror's personnel for the purpose of interview and discussion relating to such documents.

Does Offeror agree? YES SVC Initials of Authorized Representative of Offeror

CERTIFICATION OF APPLICABILITY TO SUBCONTRACTRS

Offeror agrees that all contracts it awards pursuant to the Contract shall be bound by the foregoing terms and conditions.

Does Offeror agree? YES SVC Initials of Authorized Representative of Offeror

Offeror agrees to comply with all federal, state, and local laws, rules, regulations and ordinances, as applicable. It is further acknowledged that Offeror certifies compliance with all provisions, laws, acts, regulations, etc. as specifically noted above.

Offeror's Name: Dude Solutions, Inc.

Address, City, State, and Zip Code: 11000 Regency Parkway, Suite 110, Cary, NC 27518

Phone Number: (877) 868-3833 Fax Number: (800) 216-3063

Printed Name and Title of Authorized Representative: Scott V. Carpenter, SVP of Sales

Email Address: scott@schooldude.com

Signature of Authorized Representative: Date: 11/11/16

DOC #8

OWNERSHIP DISCLOSURE FORM
(N.J.S. 52:25-24.2)

Pursuant to the requirements of P.L. 1999, Chapter 440 effective April 17, 2000 (Local Public Contracts Law), the offeror shall complete the form attached to these specifications listing the persons owning 10 percent (10%) or more of the firm presenting the proposal.

Company Name: Dude Solutions, Inc.

Street: 11000 Regency Parkway, Suite 110,

City, State, Zip Code: Cary, NC 27518

Complete as appropriate:

I_____, certify that I am the sole owner of _____, that there are no partners and the business is not incorporated, and the provisions of N.J.S. 52:25-24.2 do not apply.

OR:

I_____, a partner in_____, do hereby certify that the following is a list of all individual partners who own a 10% or greater interest therein. I further certify that if one (1) or more of the partners is itself a corporation or partnership, there is also set forth the names and addresses of the stockholders holding 10% or more of that corporation's stock or the individual partners owning 10% or greater interest in that partnership.

OR:

I, Scott Carpenter_____, an authorized representative of Dude Solutions, a corporation, do hereby certify that the following is a list of the names and addresses of all stockholders in the corporation who own 10% or more of its stock of any class. I further certify that if one (1) or more of such stockholders is itself a corporation or partnership, that there is also set forth the names and addresses of the stockholders holding 10% or more of the corporation's stock or the individual partners owning a 10% or greater interest in that partnership.

(Note: If there are no partners or stockholders owning 10% or more interest, indicate none.)

Name	*Address*	*Interest*
Kent Hudson	11000 Regency Parkway, Cary, NC 27518	26.23%
Ralph Prevost	11000 Regency Parkway, Cary, NC 27518	17.30%
Warburg Pincus	450 Lexington Ave, New York, NY 10017	46.80%

I further certify that the statements and information contained herein, are complete and correct to the best of my knowledge and belief.

11/11/16
Date

Authorized Signature and Title

DOC #9

NON-COLLUSION AFFIDAVIT

Company Name: Dude Solutions, Inc.

Street: 11000 Regency Parkway, Suite 110

City, State, Zip Code: Cary, NC 27518

State of New Jersey

County of

I, Scott V. Carpenter of the Cary Name

in the County of Wake, State of North Carolina of full age, being duly sworn according to law on my oath depose and say that:

I am the SVP of Sales of the firm of Dude Solutions the offeror making the Proposal for the goods, services or public work specified under the attached proposal, and that I executed the said proposal with full authority to do so; that said offeror has not directly or indirectly entered into any agreement, participated in any collusion, or otherwise taken any action in restraint of free, competitive bidding in connection with the above proposal, and that all statements contained in said proposal and in this affidavit are true and correct, and made with full knowledge that Region 4 ESC *relies upon the truth of the statements contained in said proposal and in the statements contained in this affidavit in awarding the contract for the said goods, services or public work.*

I further warrant that no person or selling agency has been employed or retained to solicit or secure such contract upon an agreement or understanding for a commission, percentage, brokerage or contingent fee, except bona fide employees or bona fide established commercial or selling agencies maintained by

Dude Solutions — *Company Name*

SVP of Sales — *Authorized Signature & Title*

Subscribed and sworn before me

this 11 day of November, 2016

Linda P Lowery

Notary Public of North Carolina

My commission expires May 2, 2017

SEAL

LINDA P LOWERY NOTARY PUBLIC HARNETT COUNTY, N.C.

DOC #10

AFFIRMATIVE ACTION AFFIDAVIT
(P.L. 1975, C.127)

Company Name: Dude Solutions, Inc.

Street: 11000 Regency Parkway, Suite 110

City, State, Zip Code: Cary, NC 27518

Proposal Certification:

Indicate below your compliance with New Jersey Affirmative Action regulations. Your proposal will be accepted even if you are not in compliance at this time. No contract and/or purchase order may be issued, however, until all Affirmative Action requirements are met.

Required Affirmative Action Evidence:

Procurement, Professional & Service Contracts (Exhibit A)
Offerors must submit with proposal:

1. A photo copy of their Federal Letter of Affirmative Action Plan Approval _____

OR

2. A photo copy of their Certificate of Employee Information Report Yes

OR

3. A complete Affirmative Action Employee Information Report (AA302) _____

Public Work – Over $50,000 Total Project Cost:

A. No approved Federal or New Jersey Affirmative Action Plan. We will complete Report Form AA201-A upon receipt from the _____ _____

B. Approved Federal or New Jersey Plan – certificate enclosed _____

I further certify that the statements and information contained herein, are complete and correct to the best of my knowledge and belief.

11/11/16
Date

Authorized Signature and Title

P.L. 1995, c. 127 (N.J.A.C. 17:27) MANDATORY AFFIRMATIVE ACTION LANGUAGE

PROCUREMENT, PROFESSIONAL AND SERVICE CONTRACTS

During the performance of this contract, the contractor agrees as follows:

The contractor or subcontractor, where applicable, will not discriminate against any employee or applicant for employment because of age, race, creed, color, national origin, ancestry, marital status, sex, affectional or sexual orientation. The contractor will take affirmative action to ensure that such applicants are recruited and employed, and that employees are treated during employment, without regard to their age, race, creed, color, national origin, ancestry, marital status, sex, affectional or sexual orientation. Such action shall include, but not be limited to the following: employment, upgrading, demotion, or transfer; recruitment or recruitment advertising; layoff or termination; rates of pay or other forms of compensation; and selection for training, including apprenticeship. The contractor agrees to post in conspicuous places, available to employees and applicants for employment, notices to be provided by the Public Agency Compliance Officer setting forth provisions of this non-discrimination clause.

The contractor or subcontractor, where applicable will, in all solicitations or advertisement for employees placed by or on behalf of the contractor, state that all qualified applicants will receive consideration for employment without regard to age, race, creed, color, national origin, ancestry, marital status, sex, affectional or sexual orientation.

The contractor or subcontractor, where applicable, will send to each labor union or representative of workers with which it has a collective bargaining agreement or other contract or understanding, a notice, to be provided by the agency contracting officer advising the labor union or workers' representative of the contractor's commitments under this act and shall post copies of the notice in conspicuous places available to employees and applicants for employment.

The contractor or subcontractor, where applicable, agrees to comply with any regulations promulgated by the Treasurer pursuant to P.L. 1975, c. 127, as amended and supplemented from time to time and the Americans with Disabilities Act.

The contractor or subcontractor agrees to attempt in good faith to employ minority and female workers trade consistent with the applicable county employment goal prescribed by N.J.A.C. 17:27-5.2 promulgated by the Treasurer pursuant to P.L. 1975, C.127, as amended and supplemented from time to time or in accordance with a binding determination of the applicable county employment goals determined by the Affirmative Action Office pursuant to N.J.A.C. 17:27-5.2 promulgated by the Treasurer pursuant to P.L. 1975, C.127, as amended and supplemented from time to time.

The contractor or subcontractor agrees to inform in writing appropriate recruitment agencies in the area, including employment agencies, placement bureaus, colleges, universities, labor unions, that it does not discriminate on the basis of age, creed, color, national origin, ancestry, marital status, sex, affectional or sexual orientation, and that it will discontinue the use of any recruitment agency which engages in direct or indirect discriminatory practices.

The contractor or subcontractor agrees to revise any of it testing procedures, if necessary, to assure that all personnel testing conforms with the principles of job-related testing, as established by the

statutes and court decisions of the state of New Jersey and as established by applicable Federal law and applicable Federal court decisions.

The contractor or subcontractor agrees to review all procedures relating to transfer, upgrading, downgrading and lay-off to ensure that all such actions are taken without regard to age, creed, color, national origin, ancestry, marital status, sex, affectional or sexual orientation, and conform with the applicable employment goals, consistent with the statutes and court decisions of the State of New Jersey, and applicable Federal law and applicable Federal court decisions.

The contractor and its subcontractors shall furnish such reports or other documents to the Affirmative Action Office as may be requested by the office from time to time in order to carry out the purposes of these regulations, and public agencies shall furnish such information as may be requested by the Affirmative Action Office for conducting a compliance investigation pursuant to Subchapter 10 of the Administrative Code (NJAC 17:27).

Certification 42703

CERTIFICATE OF EMPLOYEE INFORMATION REPORT

RENEWAL

This is to certify that the contractor listed below has submitted an Employee Information Report pursuant to N.J.A.C. 17:27-1.1 et. seq. and the State Treasurer has approved said report. This approval will remain in effect for the period of 15-OCT-2015 to 15-OCT-2018

DUDE SOLUTIONS, INC.
11000 REGENCY PKWY., SUITE 200
CARY NC 27518

Robert A. Romano,
Acting State Treasurer

Signature of Vendor Officer

C. 271 POLITICAL CONTRIBUTION DISCLOSURE FORM Public Agency Instructions

This page provides guidance to public agencies entering into contracts with business entities that are required to file Political Contribution Disclosure forms with the agency. **It is not intended to be provided to contractors.** What follows are instructions on the use of form local units can provide to contractors that are required to disclose political contributions pursuant to N.J.S.A. 19:44A-20.26 (P.L. 2005, c. 271, s.2). Additional information on the process is available in Local Finance Notice 2006-1 (www.nj.gov/dca/lgs/lfns/lfnmenu.shtml).

1. The disclosure is required for all contracts in excess of $17,500 that are **not awarded** pursuant to a "fair and open" process (N.J.S.A. 19:44A-20.7).
2. Due to the potential length of some contractor submissions, the public agency should consider allowing data to be submitted in electronic form (i.e., spreadsheet, pdf file, etc.). Submissions must be kept with the contract documents or in an appropriate computer file and be available for public access. **The form is worded to accept this alternate submission.** The text should be amended if electronic submission will not be allowed.
3. The submission must be **received from the contractor and** on file at least 10 days prior to award of the contract. Resolutions of award should reflect that the disclosure has been received and is on file.
4. The contractor must disclose contributions made to candidate and party committees covering a wide range of public agencies, including all public agencies that have elected officials in the county of the public agency, state legislative positions, and various state entities. The Division of Local Government Services recommends that contractors be provided a list of the affected agencies. This will assist contractors in determining the campaign and political committees of the officials and candidates affected by the disclosure.
   a. The Division has prepared model disclosure forms for each county. They can be downloaded from the "County PCD Forms" link on the Pay-to-Play web site at www.nj.gov/dca/lgs/p2p. They will be updated from time-to-time as necessary.
   b. A public agency using these forms **should edit them to properly reflect the correct legislative district**(s). As the forms are county-based, **they list all legislative districts** in each county. **Districts that do not represent the public agency should be removed from the lists.**
   c. Some contractors may find it easier to provide a single list that covers all contributions, regardless of the county. These submissions are appropriate and should be accepted.
   d. The form may be used "as-is", subject to edits as described herein.
   e. The "Contractor Instructions" sheet is intended to be provided with the form. It is recommended that the Instructions and the form be printed on the same piece of paper. The form notes that the Instructions are printed on the back of the form; where that is not the case, the text should be edited accordingly.
   f. The form is a Word document and can be edited to meet local needs, and posted for download on web sites, used as an e-mail attachment, or provided as a printed document.
5. It is recommended that the contractor also complete a "Stockholder Disclosure Certification." This will assist the local unit in its obligation to ensure that contractor did not make any prohibited contributions to the committees listed on the Business Entity Disclosure Certification in the 12 months prior to the contract. (See Local Finance Notice 2006-7 for additional information on this obligation) A sample Certification form is part of this package and the instruction to complete it is included in the Contractor Instructions. **NOTE: This section is not applicable to Boards of Education.**

C. 271 POLITICAL CONTRIBUTION DISCLOSURE FORM
Contractor Instructions

Business entities (contractors) receiving contracts from a public agency that are NOT awarded pursuant to a "fair and open" process (defined at N.J.S.A. 19:44A-20.7) are subject to the provisions of P.L. 2005, c. 271, s.2 (N.J.S.A. 19:44A-20.26). This law provides that 10 days prior to the award of such a contract, the contractor shall disclose contributions to:

- any State, county, or municipal committee of a political party
- any legislative leadership committee*
- any continuing political committee (a.k.a., political action committee)
- any candidate committee of a candidate for, or holder of, an elective office:
  - of the public entity awarding the contract
  - of that county in which that public entity is located
  - of another public entity within that county
  - or of a legislative district in which that public entity is located or, when the public entity is a county, of any legislative district which includes all or part of the county. The disclosure must list reportable contributions to any of the committees that exceed $300 per election cycle that were made during the 12 months prior to award of the contract. See N.J.S.A. 19:44A-8 and 19:44A-16 for more details on reportable contributions.

N.J.S.A. 19:44A-20.26 itemizes the parties from whom contributions must be disclosed when a business entity is not a natural person. This includes the following:

- individuals with an "interest" ownership or control of more than 10% of the profits or assets of a business entity or 10% of the stock in the case of a business entity that is a corporation for profit
- all principals, partners, officers, or directors of the business entity or their spouses
- any subsidiaries directly or indirectly controlled by the business entity
- IRS Code Section 527 New Jersey based organizations, directly or indirectly controlled by the business entity and filing as continuing political committees, (PACs). When the business entity is a natural person, "a contribution by that person's spouse or child, residing therewith, shall be deemed to be a contribution by the business entity." [N.J.S.A. 19:44A-20.26(b)] The contributor must be listed on the disclosure. Any business entity that fails to comply with the disclosure provisions shall be subject to a fine imposed by ELEC in an amount to be determined by the Commission which may be based upon the amount that the business entity failed to report. The enclosed list of agencies is provided to assist the contractor in identifying those public agencies whose elected official and/or candidate campaign committees are affected by the disclosure requirement. It is the contractor's responsibility to identify the specific committees to which contributions may have been made and need to be disclosed. The disclosed information may exceed the minimum requirement. The enclosed form, a content-consistent facsimile, or an electronic data file containing the required details (along with a signed cover sheet) may be used as the contractor's submission and is disclosable to the public under the Open Public Records Act. The contractor must also complete the attached Stockholder Disclosure Certification. This will assist the agency in meeting its obligations under the law.

NOTE: This section does not apply to Board of Education contracts.

* N.J.S.A. 19:44A-3(s): "The term "legislative leadership committee" means a committee established, authorized to be established, or designated by the President of the Senate, the Minority Leader of the Senate, the Speaker of the General Assembly or the Minority Leader of the General Assembly pursuant to section 16 of P.L.1993, c.65 (C.19:44A-10.1) for the purpose of receiving contributions and making expenditures."

C. 271 POLITICAL CONTRIBUTION DISCLOSURE FORM

Required Pursuant To N.J.S.A. 19:44A-20.26

This form or its permitted facsimile must be submitted to the local unit no later than 10 days prior to the award of the contract.

Part I – Offeror Information

Offeror Name: Dude Solutions			
Address: 11000 Regency Parkway, Suite 110			
City: Cary	St	NC	Zip: 27518

The undersigned being authorized to certify, hereby certifies that the submission provided herein represents compliance with the provisions of N.J.S.A. 19:44A-20.26 and as represented by the Instructions accompanying this form.

	Scott V. Carpenter	Senior VP of Sales
Signature	Printed Name	Title

Part II – Contribution Disclosure

Disclosure requirement: Pursuant to N.J.S.A. 19:44A-20.26 this disclosure must include all reportable political contributions (more than $300 per election cycle) over the 12 months prior to submission to the committees of the government entities listed on the form provided by the local unit.

☐ Check here if disclosure is provided in electronic form.

Contributor Name	Recipient Name	Date	Dollar Amount
N/A	N/A	N/A	$ N/A

☐ Check here if the information is continued on subsequent page(s)

Continuation Page

C. 271 POLITICAL CONTRIBUTION DISCLOSURE FORM

Required Pursuant To N.J.S.A. 19:44A-20.26

Page____of _______

Offeror Name:

Contributor Name	Recipient Name	Date	Dollar Amount
N/A	N/A	N/A	$ N/A

☐ Check here if the information is continued on subsequent page(s)

List of Agencies with Elected Officials Required for Political Contribution Disclosure
N.J.S.A. 19:44A-20.26

County Name:
State: Governor, and Legislative Leadership Committees
Legislative District #s:
State Senator and two members of the General Assembly per district.

County:

Freeholders	County Clerk	Sheriff
{County Executive}	Surrogate	

Municipalities (Mayor and members of governing body, regardless of title):

USERS SHOULD CREATE THEIR OWN FORM, OR DOWNLOAD FROM WWW.NJ.GOV/DCA/LGS/P2P A COUNTY-BASED, CUSTOMIZABLE FORM.

DOC #12

STOCKHOLDER DISCLOSURE CERTIFICATION

Name of Business:

☐ ☒ I certify that the list below contains the names and home addresses of all stockholders holding 10% or more of the issued and outstanding stock of the undersigned.

OR

☐ I certify that no one stockholder owns 10% or more of the issued and outstanding stock of the undersigned.

Check the box that represents the type of business organization:

☐Partnership ☐ ☒ Corporation ☐Sole Proprietorship

☐Limited Partnership ☐Limited Liability Corporation ☐Limited Liability Partnership

☐Subchapter S Corporation

Sign and notarize the form below, and, if necessary, complete the stockholder list below.

Stockholders:

Name: Kent Hudson Home Address: 11000 Regency Parkway, Cary, NC 27518	Name: Ralph Prevost Home Address: 11000 Regency Parkway, Cary, NC 27518
Name: Warburg Pincus Home Address: 450 Lexington Ave, NY, NY 10017	Name: Home Address:
Name: Home Address:	Name: Home Address:

Subscribed and sworn before me this 11 day of Nov, 2016

(Notary

My Commission May 2, 2017

LINDA P LOWERY NOTARY PUBLIC HARNETT COUNTY, N.C.

Linda P Lowery
(~~Affi~~ Notary

Linda P Lowery
(Print name & title of Notary

(~~Corporate~~

ACKNOWLEDGMENT AND ACCEPTANCE
OF REGION 4 ESC's OPEN RECORDS POLICY

Signature below certifies complete acceptance of Region 4 ESC's Open Records Policy, except as noted below (additional pages may be attached, if necessary).

Check one of the following responses to the Acknowledgment and Acceptance of Region 4 ESC's Open Records Policy below:

☐ ☒ We acknowledge Region 4 ESC's Open Records Policy and declare that no information submitted with this proposal, or any part of our proposal, is exempt from disclosure under the Public Information Act.

(*Note: All information believed to be a trade secret or proprietary must be listed below. It is further understood that failure to identify such information, in strict accordance with the instructions below, will result in that information being considered public information and released, if requested under the Public Information Act.)*

☐ We declare the following information to be a trade secret or proprietary and exempt from disclosure under the Public Information Act.

(Note: Offeror must specify page-by-page and line-by-line the parts of the response, which it believes, are exempt. In addition, Offeror must specify which exception(s) are applicable and provide detailed reasons to substantiate the exception(s).

11/11/16
Date

SAV SVP
Authorized Signature & Title

EXHIBIT "5"

Terms of Use

Consisting of 17 Pages

Terms of Use

Last Updated: March 30, 2020

SUBSCRIPTION AGREEMENT

This Online Subscription Agreement (this "Agreement") shall govern Subscriber's (as defined below) access and use of the Service (as defined below) provided by Dude Solutions, Inc. (together with its affiliates, successors and assigns, "DSI"). BY ACCEPTING THIS AGREEMENT, EITHER BY CLICKING A BOX INDICATING ACCEPTANCE, BY EXECUTING AN ORDER FORM THAT REFERENCES THIS AGREEMENT OR BY OTHERWISE ACCESSING AND USING THE SERVICE, YOU AGREE TO THE TERMS OF THIS AGREEMENT. AS A RESULT, PLEASE READ ALL THE TERMS AND CONDITIONS OF THIS AGREEMENT CAREFULLY.

IF YOU ARE ENTERING INTO THIS AGREEMENT ON BEHALF OF A COMPANY OR OTHER LEGAL ENTITY, YOU REPRESENT THAT YOU HAVE THE AUTHORITY TO BIND SUCH ENTITY AND ITS AFFILIATES TO THE TERMS AND CONDITIONS OF THIS AGREEMENT, IN WHICH CASE THE TERMS "YOU" OR "YOUR" SHALL REFER TO SUCH ENTITY AND ITS AFFILIATES. IF YOU DO NOT HAVE SUCH AUTHORITY, OR IF YOU DO NOT AGREE WITH THE TERMS AND CONDITIONS SET FORTH HEREIN, YOU MUST NOT ACCEPT THIS AGREEMENT AND MAY NOT USE THE SERVICE.

Section 1.0 Definitions

As used in this Agreement, the following terms shall have the meanings set forth below:

1.1 "Access Credentials" means any user name, identification number, password, license or security key, security token, PIN or other security code, method, technology or device used, alone or in combination, to verify an individual's identity and authorization to access and use the Service.

1.2 "Account" means Subscriber's specific account where Subscriber subscribes to access and use Service(s).

1.3 "Account User" means each employee, consultant and contractor of Subscriber that has been granted Access Credentials.

1.4 "Affiliate" means, with respect to any legal entity, any other legal entity that (i) controls, (ii) is controlled by or (iii) is under common control of such legal entity. A legal entity shall be deemed to "control" another legal entity if it has the power to direct or cause the direction of the management or policies of such legal entity, whether through the ownership of voting securities, by contract, or otherwise.

1.5 "Annual Fee" means the annual fee invoiced to Subscriber by DSI (or its sales agent) prior to the Initial Term and each applicable Renewal Term, which is required to be paid in order for Subscriber to be permitted to access and use the Service and, if Subscriber purchases a Connector Toolkit, the API.

1.6 "API Toolkit" or "API" means DSI's proprietary application programming interface and any accompanying or related documentation, software libraries, software tools, published specifications, and other materials, as amended from time-to-time in DSI's sole discretion.

1.7 "Beta Services" means DSI Services or functionality that may be made available to Subscriber to try at its option at no additional charge that is clearly designated as beta, pilot, limited release, early adoption, non-production, sandbox, evaluation or a similar description.

1.8 "Connector Toolkit" means DSI's add-on module that (i) enables DSI's Subscribers to integrate (import/export) Subscriber Data with the Service in batch-mode or real-time, and (ii) consists of the *"Connecter Tool"*, which is a client-side executable program installed locally on Subscriber's computer, and the API.

1.9 "Confidential Information" means any non-public information and/or materials disclosed in writing or orally by a party under this Agreement (the "Disclosing Party") to the other party (the "Receiving Party"), which (i) is designated in writing as confidential at the time of disclosure, or (ii) with respect to non-public information disclosed orally, the Disclosing Party sends the Receiving Party a written notice to Receiving Party within 15 days after oral disclosure identifying the non-public information that was disclosed as its confidential information, including when, where, how and to whom such non-public information was disclosed. For avoidance of doubt, DSI's Confidential Information shall include the source code, data structure, algorithms and logic of the Applications and Service. Notwithstanding the foregoing, Confidential Information shall not include any information that (i) is or becomes generally known to the public without breach of any obligation owed to the Disclosing Party, (ii) was known to the Receiving Party prior to its disclosure by the Disclosing Party without breach of any obligation owed to the Disclosing Party, (iii) is received from a Third Party without breach of any obligation owed to the Disclosing Party, or (iv) was independently developed by the Receiving Party.

1.10 "Content" means all of the audio and visual information, documents, content, materials, products and/or software contained in, or made available through, the Service.

1.11 "Community Development Services" means the SmartGov, ATS and ASMi software application(s) subscribed to by Subscriber pursuant to the Agreement, Documentation or Order Form. For avoidance of doubt, Community Development Services applies only to Subscriber's production instance and shall exclude all beta and early adopter programs,

user interface (UI) or user experience (UX) changes, feature or functionality improvements, and enhancements where a workaround exists in production.

1.12 "Documentation" means the user documentation relating to the Service, including but not limited to descriptions of the functional, operational and design characteristics of the Service.

1.13 "DSI Data" means all data, information and other content provided by or on behalf of DSI Subscribers to any of the DSI Services.

1.14 "HIPAA" means the Health Insurance Portability and Accountability Act of 1996 (Pub. L. 104-191) and all regulations promulgated thereunder (45 C.F.R. §§ 160-164), as amended by Subtitle D of the Health Information Technology for Economic and Clinical Health Act and all regulations promulgated thereunder, as Title XIII of Division A and Title IV of Division B of the American Recovery and Reinvestment Act of 2009 (Pub. L. 111-5), as amended from time to time.

1.15 "Implementation, Training and Support Program" or "ITSP" means DSI's comprehensive implementation, training and support program provided to DSI's Subscribers with respect to the Service.

1.16 "Intellectual Property Rights" means all ideas, concepts, designs, drawings, packages, works of authorship, processes, methodologies, information, developments, materials, inventions, improvements, software, and all intellectual property rights worldwide arising under statutory or common law, including without limitation, all (i) patents and patent applications owned or licensable by a party hereto; (ii) rights associated with works of authorship, including copyrights, copyright applications, copyright registrations, mask work rights, mask work applications and mask work registrations; (iii) rights related to protection of trade secrets and Confidential Information; (iv) trademarks, trade names, service marks and logos; (v) any right analogous to those set forth in clauses (i) through (iv); and (vi) divisions, continuations, renewals, reissues and extensions of the foregoing (as and to the extent applicable) now existing, hereafter filed, issued or acquired.

1.17 "Order Form" means DSI's ordering document or online order specifying the Services to be provided hereunder that is entered into between Subscriber and DSI or its Affiliates, including any addenda and supplements. Entering into an Order Form, an Affiliate agrees to be bound by the terms of this Agreement as if it were an original party.

1.18 "Privacy Policy" means the DSI privacy policy, as amended from time-to-time, which can be viewed by clicking the "Privacy" hypertext link located on www.dudesolutions.com.

1.19 "Service" means DSI's suite of Software-as-a-Service (SaaS) applications, products and services, as updated, enhanced or otherwise modified from time-to-time that are ordered by Subscriber on an Order Form or provided without charge (if applicable) and made available by DSI, including mobile components.

1.20 "Subscriber" means the legal entity identified on the Account.

1.21 "Subscriber Data" means all data, information and other content provided by or on behalf of Subscriber to the Service, including that which the Account Users input or upload to the Service.

1.22 "Third Party" means a party other than Subscriber or DSI.

Section 2.0 Use of the Service and the API; Proprietary Rights

2.1 Use of the Service and the API.

(a) *Service Subscription.* Subject to the terms of this Agreement (including, without limitation, the responsibilities, limitations and restrictions set forth in this Section 2.1 and payment of the Annual Fees required hereunder), (i) DSI shall permit Subscriber's Account Users to access and use the Service(s) during the Term, including access and use of all of the Content contained in or made available through the Service(s), (ii) Subscriber shall be automatically enrolled in the ITSP (Implementation, Training and Support Program), if applicable, and (iii) DSI shall use commercially reasonable efforts to make available to Subscriber each of the components described in the ITSP, when applicable. Subscriber agrees that it shall use the Service(s) solely for internal business purposes, and access and use of the Service(s) and the ITSP shall be limited to Account Users.

(b) *API License.* Subject to the terms of this Agreement (including, without limitation, the responsibilities, limitations and restrictions set forth in this Section 2.1 and payment of the Annual Fees required hereunder), provided that Subscriber is purchasing the right to use the Connector Toolkit, DSI hereby grants to Subscriber a limited, non-exclusive, non-transferable, revocable license (without the right to sublicense) to use and make calls to the API solely for the purpose of (i) extracting and transferring Subscriber Data from the Service to other Third Party applications used by the Subscriber for internal business purposes, and/or (ii) Subscriber's internal development efforts to develop applications to work in conjunction with the functionality and capabilities of the Service purchased by Subscriber ("Subscriber Applications"). Subscriber shall have no right to distribute, license (whether or not through multiple tiers) or otherwise transfer the API to any Third Party or incorporate the API in any software, product, or technology.

(c) *Account Setup.* To subscribe to the Service, Subscriber must establish its Account, which may only be accessed and used by its Account Users. To setup an Account User, Subscriber must provide DSI (and agree to maintain, promptly update and keep) true, accurate, current and complete information for such Account User. If Subscriber or any applicable Account User provides any information that is untrue, inaccurate, not current or incomplete, DSI has the right to immediately suspend or terminate Subscriber's Account and usage of the Service and the API and refuse any and all future use. Each Account User must establish and maintain personal, non-transferable Access Credentials, which shall not be shared with, or used by, any other Third Party. Subscriber may not transfer an Account User's Access Credentials and/or its right to access and use the Service to a different user. Subscriber shall be solely responsible for any and all activities that occur under its Account, including all acts and omissions of its Account Users. Subscriber shall notify DSI immediately of any unauthorized use of its Account and/or any other breach of security of the Service that it suspects or becomes aware of.

(d) *Subscriber Responsibilities.* Subscriber shall: (i) take appropriate action to ensure that non-Account Users do not access or use the Service or the API; (ii) ensure that all Account Users comply with all of the terms and conditions of this Agreement, including the limitations and restrictions set out in Section 2.1(e); (iii) be solely responsible for the accuracy, integrity, legality, reliability and appropriateness of all Subscriber Data created by Account Users using the Service; (iv) access and use the Service solely in compliance with the Documentation and all applicable local, state, federal, and foreign laws, rules, directives and regulations (including those relating to export, homeland security, anti-terrorism, data protection and privacy); (v) allow e-mail notifications generated by the Service on behalf of Subscriber's Account Users to be delivered to Subscriber's Account Users; and (vi) promptly update and upgrade its system as requested or required in order to ensure continued performance and compatibility with upgrades to the Service and/or API Modifications (as defined in Section 2.1(g)). Subscriber shall be responsible for any breach of this Agreement by Account Users and any access or Use of the Service by persons other than Account Users.

(e) *Limitations and Restrictions.* Subscriber agrees that it shall not, and shall not permit any Third Party to, directly or indirectly: (i) modify, alter, revise, decompile, disassemble, reverse engineer, create derivative works or attempt to derive the source code of the Service or the API; (ii) assign, transfer, lease, rent, sublicense, distribute or otherwise make available the Service or the API, in whole or in part, to any Third Party, including on a timesharing, software-as-a-service or other similar basis; (iii) share Access Credentials or otherwise allow access or use the Service or the API to provide any service bureau services or any services on a similar basis; (iv) use the Service or the API in a way not authorized in writing by DSI or for any unlawful purpose; (v) use the Service or the API to store or transmit infringing, libelous, or otherwise unlawful or tortious material, or to store or transmit material in violation of Third Party privacy rights; (vi) attempt to tamper with, alter, disable, hinder, by-pass, override, or circumvent any security, reliability, integrity, accounting or other mechanism, restriction or requirement of the Service or the API; (vii) remove, obscure or alter any copyright, trademark, patent or proprietary notice affixed or displayed by or in the Service; (viii) perform load tests, network scans, penetration tests, ethical hacks or any other security auditing procedures on the Service or the API; (ix) interfere with or disrupt the integrity or performance of the Service, the API or the data contained therein; (x) access or use the Service or the API in order to replicate applications, products or services offered by DSI and/or otherwise build a competitive product or service, copy any features, functions or graphics of the Service or the API or monitor the availability and/or functionality of the Service or the API for any benchmarking or competitive purposes; (xi) under any circumstances, through a Third Party application, a Subscriber Application or otherwise, repackage or resell the Service, the API or any DSI data received via the API; (xii) store, manipulate, analyze, reformat, print, and display the Content for personal use; and (xiii) upload or insert code, scripts, batch files or any other form of scripting or coding into the Service;.

(f) *Additional Service Guidelines.* DSI reserves the right to establish or modify general practices and limits concerning use of the Service. DSI shall provide at least thirty (30) days' prior notice of any such modification. DSI also reserves the right to block IP addresses originating a Denial of Service (DoS) attack. DSI shall notify Subscriber should this condition exist and inform Subscriber of its action. Once blocked, an IP address shall

not be able to access the Service or the API and the block may be removed once DSI is satisfied corrective action has taken place to resolve the issue.

(g) *API Modifications.* DSI may modify, amend, change, or deprecate all or part of the API in its sole discretion at any time (an "API Modification"). DSI shall use reasonable efforts to provide notice to Subscriber of any such API Modifications as soon as reasonably practical. Subscriber acknowledges that an API Modification may have a material adverse effect on any applications utilizing or relying upon the API (including Subscriber Applications), including but not limited to causing such applications not to operate as designed. DSI shall have no liability of any kind to Subscriber or any user of such applications with respect to such API Modifications or any adverse effects resulting from such API Modifications.

(h) *Controlled API Usage.* DSI may limit or suspend Subscriber's usage of or access to the API if, in DSI's sole discretion, Subscriber or Subscriber's use of the API are adversely affecting the performance or operation of the API or the Service. DSI shall use reasonable efforts to provide notice to Subscriber of any such actions as soon as reasonably practical.

(i) *Links to Third Party Websites.* To the extent that the Service links to any Third Party website, application or service, the terms and conditions thereof shall govern Subscriber's rights with respect to such website, application or service, unless otherwise expressly provided DSI. DSI shall have no obligations or liability arising from Subscriber's access and use of such linked Third Party websites, applications and services.

(j) *Beta Services.* From time to time, DSI may make Beta Services available to Subscribers at no charge. Subscriber may choose to try such Beta Services or not in its sole discretion. Use of the Beta Services is at Subscriber's sole risk and may contain bugs or errors. Subscriber may discontinue use of the Beta Services at any time, in its sole discretion. Further, DSI may discontinue any and all Beta Services availability at any time in its sole discretion without notice. NOTWITHSTANDING THE DISCLAIMER OF WARRANTIES IN SECTION 7.2(B) AND INDEMNIFICATION IN SECTION 7.3, BETA SERVICES AND DOCUMENTATION, ARE PROVIDED ON AN "AS-IS" AND "AS AVAILABLE" BASIS, WITHOUT ANY WARRANTIES OF ANY KIND. PROVIDER EXPRESSLY DISCLAIMS ANY AND ALL WARRANTIES, WHETHER EXPRESS OR IMPLIED, INCLUDING, BUT NOT LIMITED TO, ANY IMPLIED WARRANTIES OF MERCHANTABILITY, TITLE, FITNESS FOR A PARTICULAR PURPOSE, AND NON-INFRINGEMENT. DSI SHALL HAVE NO INDEMNIFICATIN OBLIGATIONS AND NO LIABILITY OF ANY TYPE WITH RESPECT TO THE BETA SERVICES UNLESS SUCH EXCLUSION IS UNENFORCEABLE UNDER APPLICABLE LAW IN WHICH CASE DSI'S LIABILITY WITH RESPECT TO THE BETA SERVICES PROVIDED SHALL NOT EXCEED $500.00.

2.2 Proprietary Rights.

(a) Subscriber acknowledges and agrees that (as between Subscriber and DSI) DSI retains all ownership right, title, and interest in and to the Service, the API, the Documentation and the Content, including without limitation all corrections, enhancements, improvements to, or derivative works thereof (collectively, "Derivative Works"), and in all Intellectual Property Rights therein or thereto. To the extent any Derivative Work is developed by DSI based

upon ideas or suggestions submitted by Subscriber to DSI, Subscriber hereby irrevocably assigns all rights to modify or enhance the Service and/or the API using such ideas or suggestions or joint contributions to DSI, together with all Intellectual Property Rights related to such Derivative Works. Nothing contained in this Agreement shall be construed to convey to Subscriber (or to any party claiming through Subscriber) any Intellectual Property Rights in or to the Service, the API, the Documentation and the Content, other than the rights expressly set forth in this Agreement.

(b) DSI acknowledges and agrees that (as between Subscriber and DSI) Subscriber retains all ownership right, title, and interest in and to the Subscriber Data, including all Intellectual Property Rights therein or thereto. Notwithstanding the foregoing, Subscriber hereby grants DSI and its Affiliates a non-exclusive, royalty-free license to: (i) access, display, copy, distribute, transmit, publish, disclose and otherwise use all or any portion of the Subscriber Data to fulfill its obligations under this Agreement. In addition, Subscriber hereby grants DSI a non-exclusive, royalty-free right to use aggregated and de-identified data generated and/or derived by DSI from the Subscriber Data (the "De-Identified Data") in order to improve the Services and DSI's performance hereunder to grow DSI's business, including without limitation, submitting and sublicensing such De-Identified Data to Third Parties for analytical purposes, provided that DSI shall take commercially reasonable efforts to conduct such de-identification in a manner that ensures that such De-Identification cannot be traced back to Subscriber.

(c) Subscriber acknowledges the Services may utilize, embed or incorporate Third Party software and/or tools (each, a "Third-Party Tool") under a license granted to DSI by one or more applicable Third Parties (each, a "Third-Party Licensor"), which licenses DSI the right to sublicense the use of the Third-Party Tool solely as part of the Services. Each such sublicense is nonexclusive and solely for Subscriber's internal use and Subscriber shall not further resell, re-license, or grant any other rights to use such sublicense to any Third Party. Subscriber further acknowledges that each Third-Party Licensor retains all right, title, and interest to its applicable Third-Party Tool and all documentation related to such Third-Party Tool. All confidential or proprietary information of each Third-Party Licensor is Confidential Information of DSI under the terms of this Agreement and shall be protected in accordance with the terms of Section 8.

Section 3.0 DSI Responsibilities

3.1 Implementation, Training and Support Program (ITSP). During the Term DSI (or its agent, representative or designee) shall provide and maintain an ITSP program. During the Term, DSI shall, as part of Subscriber's Subscription Fees, provide telephone and email support ("Support Services") during the hours of 8:00 AM and 6:00 PM EST, Monday through Friday, excluding New Year's Day, Memorial Day, Independence Day, Labor Day, Thanksgiving Day, day after Thanksgiving, Christmas Eve and Christmas Day ("Business Hours"), except Community Development Services, where Business Hours means 5:00 AM – 5:00 PM PST.

3.2 Professional Services. DSI shall provide and perform professional, technical, consulting and/or other services (collectively, "Professional Services") that are mutually agreed upon and described in one or more statements of work that expressly reference this Agreement. Each statement of work shall be effective, incorporated into and form a part of

this Agreement when duly executed by an authorized representative of each of the parties. Each statement of work shall (i) describe the fees and payment terms with respect the Professional Services being provided pursuant to such statement of work, (ii) identify any work product that will be developed pursuant to such statement of work, and (iii) set forth each party's respective ownership and proprietary rights with respect to any work product developed pursuant to such statement of work.

3.3 Service Levels.

(a) DSI shall use commercially reasonable efforts to make the Service available 99.9% for each full calendar month during the Term, determined on a twenty-four(24) hours a day, seven (7) days a week basis (the "Service Standard"). Service availability for access and use by Subscriber(s) excludes unavailability when due to: (a) any access to or use of the Service by Subscriber or any Account User that does not strictly comply with the terms of the Agreement or the Documentation; (b) any failure of performance caused in whole or in part by Subscriber's delay in performing, or failure to perform, any of its obligations under the Agreement; (c) Subscriber's or its Account User's Internet connectivity; (d) any Force Majeure Event; (e) any failure, interruption, outage, or other problem with Internet service or Non-DSI Service; (f) Scheduled Downtime; or (g) any disabling, suspension, or termination of the Service by DSI pursuant to the terms of the Agreement. "Scheduled Downtime" means, with respect to any applicable Service, the total amount of time (measured in minutes) during an applicable calendar month when such Service is unavailable for the majority of Subscribers' Account Users due to planned Service maintenance. To the extent reasonably practicable, DSI shall give at least eight (8) hours prior electronic notice of Service maintenance events and schedule outside the business hours of 6:00 AM - 10:00 PM EST.

(b) DSI shall use reasonable efforts to ensure the availability of the API in accordance with the service levels described in Section 3.3(a). Notwithstanding the foregoing, DSI does not guarantee any required uptime, performance, or integrity of any product, application or service that integrates with and/or otherwise utilizes the API (including, without limitation, any such product, application or service developed by Subscriber). Moreover, DSI shall not be liable to Subscriber or any Third Party for the unavailability of the API or the failure of the API to perform in accordance with its specifications. Subscriber shall not represent to any Third Party any availability or performance levels with respect to the API.

3.4 Protection of Subscriber Data. DSI shall maintain commercially reasonable administrative, physical, and technical safeguards for protection of the security, unauthorized access or disclosure of Subscriber Data. In addition, if Subscriber is a "Covered Entity" under HIPAA, DSI shall be Subscriber's "Business Associate" under HIPAA, and any Subscriber Data provided by Subscriber to DSI in their capacities as a Covered Entity and Business Associate, respectively, DSI and Subscriber shall enter into a Business Associate Agreement (the form of which shall be reasonably satisfactory to DSI). At all times during the Subscription term and upon written request of Subscriber within thirty (30) days after the effective date of termination or expiration of this Agreement, Subscriber data shall be available for Subscriber's export and download. Following the thirty (30) days after termination or expiration, DSI shall not be obligated to maintain Subscriber Data and shall delete or destroy what remains in its possession or control unless prohibited by law.

Log In

Section 4.0 Third Party Interactions

4.1 Relationship to Third Parties. In connection with Subscriber's use of the Service, Subscriber may: (i) enter into correspondence with and/or participate in promotions of advertisers or sponsors showing their goods and/or services through the Service; (ii) purchase goods and/or services, including implementation, customization, content, forms, schedules, integration and other services; (iii) exchange data, integrate, or interact between Subscriber's Account, the Service, the API and a Third Party provider; (iv) be offered additional functionality within the user interface of the Service through use of the API; and/or (v) be provided content, knowledge, subject matter expertise in the creation of forms, content and schedules. Any such activity, and any terms, conditions, warranties or representations associated with such activity, shall be solely between Subscriber and the applicable Third Party. DSI shall have no liability, obligation or responsibility for any such correspondence, purchase, promotion, data exchange, integration or interaction between Subscriber and any such Third Party.

4.2 Ownership. Subscriber is the owner of all Third Party content and data loaded into the Subscriber Account. As the owner, it is Subscriber's responsibility to make sure it meets its particular needs. DSI shall not comment, edit or advise Subscriber with respect to such Third Party content and data in any manner.

4.3 No Warranty or Endorsement. DSI does not warrant any Third Party providers or any of their products or services, whether or not such products or services are designated by DSI as "certified," "validated," "premier" and/or any other designation. DSI does not endorse any sites on the Internet that are linked through the Service. DSI is providing these links to Subscriber only as a matter of convenience, and in no event shall DSI be responsible for any content, products, or other materials on or available from such sites. The limitations of liability shall apply to all Third Party Interactions.

Section 5.0 Annual Fees

5.1 Annual Fees. Subscriber shall, on or before the commencement of the Initial Term of a Service subscription, pay to DSI the Annual Fee for such Service subscription. Thereafter, DSI shall invoice Subscriber for each applicable Annual Fee at least sixty (60) days prior to the commencement of the applicable Renewal Term. Unless Subscriber provides written notice of non-renewal in accordance with Section 6.1, Subscriber agrees to pay all Annual Fees no later than thirty (30) days after the receipt of DSI's applicable invoice. Subscriber is responsible for providing complete and accurate billing and contact information to DSI and notifying DSI of any changes to such information.

5.2 Automatic Payments. Subscriber shall, upon the written request from DSI, establish and maintain valid and updated credit card information or a valid ACH auto debit account (in each case, the "Automatic Payment Method"). Upon establishment of such Automatic Payment Method, DSI (as DSI's collection agent) is hereby authorized to charge any applicable Annual Fee using such Automatic Payment Method.

5.3 Renewal Charges. DSI maintains the right to increase Annual Fees and other applicable fees and charges in connection with each Renewal Term.

5.4 Taxes. DSI's fees do not include any taxes, levies, duties or similar governmental assessments of any nature, including, for example, value-added, sales, use or withholding taxes, assessable by any jurisdiction whatsoever (collectively, "Taxes"). Subscriber is responsible for paying all Taxes associated with its purchases hereunder. If DSI has the legal obligation to pay or collect Taxes for which Subscriber is responsible under this Section 5.4, DSI (as DSI's collection agent) shall invoice Subscriber and Subscriber shall pay that amount unless Subscriber provides DSI with a valid tax exemption certificate authorized by the appropriate taxing authority. Subscriber agrees to indemnify and hold DSI harmless from any encumbrance, fine, penalty or other expense which DSI may incur as a result of Subscriber's failure to pay any Taxes required hereunder. For clarity, DSI is solely responsible for taxes assessable against DSI based on its income, property and employees.

Section 6.0 Term and Termination

6.1 Term. This Agreement commences on the date Subscriber establishes its Account and continues until the Service subscription hereunder has expired or have been terminated (the "Term"). The initial term of the Service subscription shall be set forth on the Order Form (the "Initial Term"). Thereafter, the Service subscription shall automatically renew for successive one year periods (each, a "Renewal Term") unless either party has provided written notice of its intent to not renew the Service subscription not less than thirty (30) days prior to the expiration of the then-current Initial or Renewal Term applicable to the Service subscription.

6.2 Termination of Agreement for Breach. Either party may terminate this Agreement (including its Service subscription and Account) prior to the expiration of the Term if the other party commits a material breach of this Agreement and fails to cure such breach within thirty (30) days after written notice of such breach is given by the non-breaching party; provided that if the breach involves a failure of Subscriber to pay any of the fees required under this Agreement, the cure period shall be reduced to ten (10) days. Without limiting the foregoing, in the event of a breach that gives rise to the right by DSI to terminate this Agreement, DSI may elect, as an interim measure, to suspend Subscriber's access and use of the Service, the API (if applicable) and the Account until the breach is cured. DSI's exercise of its suspension right shall be without prejudice to DSI's right to terminate this Agreement upon written notice to Subscriber.

6.3 Termination for Convenience. Subscriber may terminate this Agreement (including its Service subscription and Account) at any time for convenience by providing DSI forty-five (45) days' prior written notice to the following email address: notice@dudesolutions.com. Upon termination by Subscriber pursuant to this Section 7.3, Subscriber may request in writing and be granted a refund in accordance with the following: (i) if DSI receives Subscriber's written notice of termination within the first sixty (60) days after the commencement of the Initial Term, DSI shall refund to Subscriber eighty percent (80%) of the Annual Fee prepaid for the Initial Term (the "Initial Year Subscription Fee"); (ii) if DSI receives Subscriber's written notice of termination during the Initial Term but after the first sixty (60) days thereof, DSI shall refund to Subscriber any prepaid Subscription Fees of the Initial Year Subscription determined based upon the number of full months remaining in the Initial Term (based upon the effective date of termination). For avoidance of doubt, no

refund shall be granted during a Renewal Term or with respect to Professional Services rendered.

6.4 Effect of Termination. Upon termination of this Agreement, (i) Subscriber's access and use of the Service shall automatically cease, and (ii) DSI shall have no obligation to maintain the Subscriber Data or to forward the Subscriber Data to Subscriber or any Third Party.

6.5 Survival. The following portions of this Agreement shall survive termination of this Agreement and continue in full force and effect: Sections 2.1(e), 2.2, 6.4, 7, 8 and 9. Termination of this Agreement, or any of the obligations hereunder, by either party shall be in addition to any other legal or equitable remedies available to such party, except to the extent that remedies are otherwise limited hereunder.

Section 7.0 Representations, Warranties and Disclaimers

7.1 Representations. Subscriber represents and warrants that: (i) it has full right, title and authority to enter into this Agreement; and (ii) this Agreement constitutes a legal, valid and binding obligation of Subscriber, enforceable against it in accordance with its terms.

7.2 Warranties.

(a) DSI represents and warrants that all such Professional Services shall be performed in a professional and workmanlike manner in accordance with generally accepted industry standards. For any breach of this warranty, Subscriber's exclusive remedy and DSI's entire liability shall be the re-performance of the applicable Professional Services.

(b) EXCEPT AS EXPRESSLY STATED HEREIN, THE PARTIES MAKE NO REPRESENTATION, WARRANTY, OR GUARANTY AS TO THE RELIABILITY, TIMELINESS, QUALITY, SUITABILITY, TRUTH, AVAILABILITY, ACCURACY OR COMPLETENESS OF THE SERVICES OR ANY CONTENT. PARTIES DISCLAIM ALL REPRESENTATIONS OR WARRANTIES THAT: (I) THE USE OF THE SERVICES OR API SHALL BE SECURE, TIMELY, UNINTERRUPTED OR ERROR-FREE OR OPERATE IN COMBINATION WITH ANY OTHER HARDWARE, SOFTWARE, SYSTEM OR DATA; (II) THE SERVICES OR API SHALL MEET YOUR REQUIREMENTS OR EXPECTATIONS; (III) ANY STORED DATA SHALL BE ACCURATE OR RELIABLE; (IV) THE QUALITY OF ANY PRODUCTS, SERVICES, INFORMATION, OR OTHER MATERIAL PURCHASED OR OBTAINED BY YOU THROUGH THE SERVICES SHALL MEET YOUR REQUIREMENTS OR EXPECTATIONS; (V) ERRORS OR DEFECTS SHALL BE CORRECTED; (VI) THE SERVICES OR THE SERVER(S) THAT MAKE THE SERVICES AVAILABLE ARE FREE OF VIRUSES OR OTHER HARMFUL COMPONENTS. THE SERVICES AND ALL CONTENT IS PROVIDED TO YOU STRICTLY ON AN "AS-IS" BASIS. ALL CONDITIONS, REPRESENTATIONS AND WARRANTIES, WHETHER EXPRESS, IMPLIED, STATUTORY OR OTHERWISE, INCLUDING, WITHOUT LIMITATION, ANY IMPLIED WARRANTY OF MERCHANTABILITY, FITNESS FOR A PARTICULAR PURPOSE, OR NON-INFRINGEMENT, ARE HEREBY DISCLAIMED TO THE MAXIMUM EXTENT PERMITTED BY APPLICABLE LAW BY THE PARTIES.

7.3 Indemnification.

(a) *Indemnity* by DSI. DSI shall defend and indemnify Subscriber from any loss, damage or expense (including reasonable attorneys' fees) awarded by a court of competent jurisdiction, or paid in accordance with a settlement agreement signed by Subscriber, in connection with any Third Party claim (each, a "Claim") alleging that Subscriber's use of the Service as expressly permitted hereunder infringes upon any United States patent, copyright or trademark of such Third Party, or misappropriates the trade secret of such Third Party; provided that Subscriber (x) promptly gives DSI written notice of the Claim; (y) gives DSI sole control of the defense and settlement of the Claim; and (z) provides to DSI all reasonable assistance, at DSI's expense. If DSI receives information about an infringement or misappropriation claim related to the Service, DSI may in its sole discretion and at no cost to Subscriber: (i) modify the Service so that it no longer infringes or misappropriates, (ii) obtain a license for Subscriber's continued use of the Service, or (iii) terminate this Agreement (including Subscriber's Service subscriptions and Account) upon prior written notice and refund to Subscriber any prepaid Annual Fee covering the remainder of the term of the terminated Service subscriptions. Notwithstanding the foregoing, DSI shall have no liability or obligation with respect to any Claim that is based upon or arises out of (A) use of the Service in combination with any software or hardware not expressly authorized by DSI, (B) any modifications or configurations made to the Service by Subscriber without the prior written consent of DSI, and/or (C) any action taken by Subscriber relating to use of the Service that is not permitted under the terms of this Agreement. This Section 7.3(a) states Subscriber's exclusive remedy against DSI for any Claim of infringement of misappropriation of a Third Party's Intellectual Property Rights related to or arising from Subscriber's use of the Service.

(b) Subscriber shall defend and indemnify DSI from any loss, damage or expense (including reasonable attorneys' fees) awarded by a court of competent jurisdiction, or paid in accordance with a settlement agreement signed by DSI, in connection with any Claim alleging that the Subscriber Data, or Subscriber's use of the Service or the API in breach of this Agreement, infringes upon any United States patent, copyright or trademark of such Third Party, or misappropriates the trade secret of such Third Party; provided that DSI (x) promptly gives Subscriber written notice of the Claim; (y) gives Subscriber sole control of the defense and settlement of the Claim; and (z) provides to Subscriber all reasonable assistance, at Subscriber's expense. This Section 7.3(b) states DSI's exclusive remedy against Subscriber for any Claim of infringement of misappropriation of a Third Party's Intellectual Property Rights related to or arising from the Subscriber Data or Subscriber's use of the Service.

7.4 Limitation of Liability. IN NO EVENT SHALL DSI, IN THE AGGREGATE, BE LIABLE FOR DAMAGES TO SUBSCRIBER IN EXCESS OF THE AMOUNT OF ANNUAL FEES PAID BY SUBSCRIBER TO PROVIDER (INCLUDING PAYMENTS TO DSI, AS PROVIDER'S COLLECTION AGENT, FOR USE OF THE SERVICE) PURSUANT TO THIS AGREEMENT DURING THE TWELVE MONTHS PRIOR TO THE FIRST ACT OR OMISSION GIVING RISE TO THE LIABILITY. UNDER NO CIRCUMSTANCES SHALL PROVIDER HAVE ANY LIABILITY WITH RESPECT TO ITS OBLIGATIONS UNDER THIS AGREEMENT OR OTHERWISE FOR LOSS OF PROFITS, OR CONSEQUENTIAL, EXEMPLARY, INDIRECT, INCIDENTAL OR PUNITIVE DAMAGES, EVEN IF PROVIDER HAS BEEN ADVISED OF THE POSSIBILITY OF SUCH DAMAGES OCCURRING, AND WHETHER SUCH LIABILITY IS BASED ON CONTRACT, TORT, STRICT LIABILITY OR PRODUCTS LIABILITY. NOTHING

IN THIS SECTION SHALL LIMIT SUBSCRIBER'S PAYMENT OBLIGATIONS UNDER SECTION 5.0.

Section 8.0 Confidentiality

8.1 Protection of Confidential Information. The Receiving Party agrees that it shall (i) hold the Disclosing Party's Confidential Information in strict confidence and shall use the same degree of care in protecting the confidentiality of the Disclosing Party's Confidential Information that it uses to protect its own Confidential Information, but in no event less than reasonable care, (ii) not use the Confidential Information of the Disclosing Party for any purpose not permitted by this Agreement; (iii) not copy any part of the Disclosing Party's Confidential Information except as expressly permitted by this Agreement, (iv) limit access to the Confidential Information of the Disclosing Party to those of its employees, contractors and agents who need such access for purposes consistent with this Agreement and who have signed confidentiality agreements with the Receiving Party containing protections no less stringent than those herein.

8.2 Compelled Disclosure. The Receiving Party may disclose Confidential Information of the Disclosing Party if it is compelled by law to do so, provided the Receiving Party gives the Disclosing Party prior notice of such compelled disclosure (to the extent legally permitted) and reasonable assistance, at the Disclosing Party's cost, if the Disclosing Party wishes to contest the disclosure. If the Receiving Party is compelled by law to disclose the Disclosing Party's Confidential Information as part of a civil proceeding to which the Disclosing Party is a party, and the Disclosing Party is not contesting the disclosure, the Disclosing Party shall reimburse the Receiving Party for its reasonable cost of compiling and providing secure access to such Confidential Information.

8.3 Records Requests. To the extent permitted by law, Subscriber shall treat as exempt from treatment as a public record, and shall not disclose in response to a request made pursuant to any applicable public records law, any of DSI's Confidential Information. Upon receiving a request to produce records under any applicable public records or similar law, Subscriber shall immediately notify DSI and provide such reasonable cooperation as requested by DSI and permitted by law to oppose production or release of such DSI Confidential Information.

8.4 Remedies. Recipient acknowledges that Disclosing Party would have no adequate remedy at law should Receiving Party breach its obligations relating to Confidential Information and agrees that Disclosing Party shall be entitled to enforce its rights by obtaining appropriate equitable relief, including without limitation a temporary restraining order and an injunction.

Section 9.0 Miscellaneous

9.1 Compliance with Laws. Subscriber will comply with all laws and applicable government rules and regulations insofar as they apply to Subscriber in its performance of this Agreement's rights and obligations.

9.2 Acceptance of Privacy Policy. All data and information provided by Subscriber through its use of the Service is subject to DSI's privacy policy, as amended from time-to-time, which can be viewed by clicking the "Privacy" hypertext link located within the Service. By using the Service, Subscriber accepts and agrees to be bound and abide by such privacy policy.

9.3 Governing Law. This Agreement and any dispute arising out of or in connection with this Agreement shall be governed by and construed under the laws of the State of North Carolina, without regard to the principles of conflict of laws. Each of DSI and Subscriber hereby waives any right to jury trial in connection with any action or litigation in any way arising out of or related to this Agreement.

9.4 Relationship of the Parties. DSI is performing pursuant to this Agreement only as an independent contractor. DSI has the sole obligation to supervise, manage, contract, direct, procure, perform or cause to be performed its obligations set forth in this Agreement, except as otherwise agreed upon by the parties. Nothing set forth in this Agreement shall be construed to create the relationship of principal and agent between DSI and Subscriber. DSI shall not act or attempt to act or represent itself, directly or by implication, as an agent of Subscriber or its affiliates or in any manner assume or create, or attempt to assume or create, any obligation on behalf of, or in the name of, Subscriber or its affiliates.

9.5 Waiver. No failure or delay by either party in enforcing any of its rights under this Agreement shall be construed as a waiver of the right to subsequently enforce any of its rights, whether relating to the same or a subsequent matter.

9.6 Assignment. Subscriber shall have no right to transfer, assign or sublicense this Agreement or any of its rights, interests or obligations under this Agreement to any Third Party and any attempt to do so shall be null and void. DSI shall have the full ability to transfer, assign or sublicense this Agreement or any of its rights, interests or obligations under this Agreement.

9.7 Force Majeure. Subject to the limitations set forth below, neither party shall be held responsible for any delay or default, including any damages arising therefrom, due to any act of God, act of governmental entity or military authority, explosion, epidemic casualty, flood, riot or civil disturbance, war, sabotage, unavailability of or interruption or delay in telecommunications or Third Party services, failure of Third Party software, insurrections, any general slowdown or inoperability of the Internet (whether from a virus or other cause), or any other similar event that is beyond the reasonable control of such party (each, a "Force Majeure Event"). The occurrence of a Force Majeure Event shall not excuse the performance by a party unless that party promptly notifies the other party of the Force Majeure Event and promptly uses its best efforts to provide substitute performance or otherwise mitigate the force majeure condition.

9.8 Notices. Except as otherwise specified in Section 7.3 of this Agreement, all notices, instructions, requests, authorizations, consents, demands and other communications hereunder shall be in writing and shall be delivered by one of the following means, with notice deemed given as indicated in parentheses: (a) by personal delivery (when actually delivered); (b) by overnight courier (upon written verification of receipt); (c) by certified or

registered mail, return receipt requested (upon verification of receipt); or (d) solely with respect to notices to Subscriber, via electronic mail to the e-mail address maintained on Subscriber's Account. All notices to DSI shall be addressed tonotice@dudesolutions.com or Dude Solutions, Inc., Attn: Legal Department, 11000 Regency Parkway, Suite 110, Cary NC 27518

9.9 Interpretation of Agreement. The Section headings contained in this Agreement are solely for the purpose of reference, are not part of the agreement of the parties, and shall not affect in any way the meaning or interpretation of this Agreement. Any reference to any federal, state, local or foreign statute or law shall be deemed to refer to all rules and regulations promulgated thereunder, unless the context requires otherwise.

9.10 No Third Party Beneficiaries. No person or entity not a party to the Agreement shall be deemed to be a third party beneficiary of this Agreement or any provision hereof.

9.11 Severability. The invalidity of any portion of this Agreement shall not invalidate any other portion of this Agreement and, except for such invalid portion, this Agreement shall remain in full force and effect.

9.12 Entire Agreement. This Agreement is the entire agreement between Subscriber and DSI regarding Subscriber's use of the Service and supersedes all prior and contemporaneous agreements, proposals or representations, written or oral, concerning its subject matter. No modification, amendment, or waiver of any provision of this Agreement shall be effective unless in writing and signed by the party against whom the modification, amendment or waiver is to be asserted. The parties agree that any term or condition stated in any purchase order or in any other order documentation is void.

9.13 Export Compliance. The Services, other technology DSI may make available, and derivatives thereof may be subject to export laws and regulations of the United States and other jurisdictions. Each party represents that it is not named on any U.S. government denied-party list. Subscriber shall not permit any Account User to access or use any Service or Content in a U.S.-embargoed country or in violation of any U.S. export law or regulation.

9.14 Anti-Corruption. Neither party has received or been offered any illegal or improper bribe, kickback, payment, gift, or thing of value from an employee or agent of the other party in connect with this Agreement. Reasonable gifts and entertainment provided in the ordinary course of business do not violate the above restriction. If Subscriber learns of any violation of the above restriction, Subscriber shall immediately notify DSI.

9.15 Cooperative Use. With Subscriber's approval, the market research conducted by Subscriber during its selection process for the Services may be extended for use by other jurisdictions, municipalities, and government agencies of Subscriber's state. Any such usage by other entities must be in accordance with ordinance, charter, and/or procurement rules and regulations of the respective political entity.

9.16 Modifications. DSI may revise the terms of this Agreement from time-to-time and shall post the most current version of this Agreement on its website. If a revision meaningfully reduces Subscriber's rights, DSI shall notify Subscriber.

Log In

SOLUTION SUITES

Education Suite
Government Suite
Healthcare Suite
Senior Living Suite
Manufacturing Suite
Clubs & Associations Suite
Other Industries Suite

DUDE PLATFORM

Data Intelligence
Technology & Security

PRODUCTS

Asset Essentials
Capital Predictor
Energy Manager
Event Manager
Technology Essentials
SmartGov
Healthcare Maintenance
Healthcare Compliance
BioMed
Senior Living Maintenance
Senior Living Compliance
Housekeeping
Quality Inspections

EXPERTISE

Education
Government
Healthcare
Senior Living
Manufacturing
Clubs & Associations
Other Industries

SERVICE

Client Service
Implementation
Professional Services

RESOURCES

Library
Success Stories
Webinars
Podcast
Blog
Dude University

COMPANY

About
Culture
Leadership
Partnership Request
News
Careers

Start owning your operations.

Schedule Demo

Your Industry: Not Identified

Log In

Dude Solutions®

11000 Regency Parkway
Suite 400
Cary, NC 27518

Sales: 866.455.3833
Support: 877.655.3833
Contact

Help Site
Login

Terms of Use Privacy Policy © 2020 Dude Solutions Inc.

CHANGE ORDER NO. 1
To Piggyback Agreement dated January 11, 2021,
Between the City of Port Orange and Dude Solutions, Inc.

Project: Community Development Permit Software Project (SmartGov)

The following changes are hereby made to the Contract Documents:

CHANGE IN CONTRACT PRICE:	**CHANGE IN CONTRACT TIMES:**
Original Contract Price: $ 88,085.47	Original Contract Times: Effective January 11, 2021 Final Completion: March 31,2022
Net changes from previous Change Order: N/A	Changes in contract time from previous Change Orders: N/A
Contract Price prior to this Change Order: $ 88,085.47	Contract Completion Date prior to this Change Order: Effective January 11, 2021 Final Completion: March 31,2022
Net Increase (decrease) of this Change Order No. 6: Increase Line Change Order No. 1 $15,295.00	Changes in contract time requested this Change Order No. 1: (Requires Council Approval) (90 days) June 29, 2022
Contract Price with all approved Change Orders: $ 103,380.47	Contract Times with all approved Change Orders: Completion: June 29,2022

CHANGES ORDERED:

I. GENERAL: This Change Order is necessary to cover changes in the work to be performed under the Piggyback Agreement entered by and between the parties on January 11,2021.

II. REQUIRED CHANGES: This Change Order is necessary to purchase an additional 40 templates in an amount of $15,295.00, to culminate a more user-friendly product. Add 60 days for sufficient time to complete the project, and 30 days for support during the go live phase, to allow Dude Solutions to complete the Community Development permit software project (SmartGov). No goods shall be delivered, nor services commenced hereunder until this Change Order has been fully executed by all parties.

III. JUSTIFICATION: This Change Order is necessary to purchase additional templates to culminate a more user friendly product, and add an additional 90 days to the Piggyback Agreement, to allow Dude Solutions to complete the Community Development permit software project (SmartGov).

Changes in scope require Council approval. Is this a scope change? No

IV. PAYMENT: Payment for this Change Order shall be made in accordance with the terms of the Piggyback Agreement subject to a limit not to exceed **$ 103,380.47**. All payments shall be governed by the Local Government Prompt Payment Act as set forth in Florida Statutes Section 218.70 through 218.79, as amended.

Acknowledgments:

The change, and work affected thereby, is subject to all provisions of the original contract not specifically changed by this Change Order.

It is expressly understood and agreed that the approval of the Change Order shall have no effect on the original contract other than matters expressly provided herein.

The prices quoted are fair and reasonable and in proper ratio to the cost of the original work contracted for under competitive bidding; and,

The change in price and/or delivery date described is fair and reasonable and has been mutually agreed upon in full agreement and final settlement of all claims arising out of this modification including all claims for delays and disruptions resulting from, caused by, or incident to such modifications and change orders.

RECOMMENDED BY:
TIM BURMAN
COMMUNITY DEVELOPMENT DIRECTOR

By: _____
Tim Burman
Community Development Director

Date Signed: 2-28-22

ACCEPTED BY:
DUDE SOLUTIONS, INC.
Contractor

DocuSigned by:
By: _____
02DF19D1127B428...
Dan Graham, CFO

Date Signed: 2/18/2022 | 10:59:51 AM EST

RECOMMENDED BY:

_____
City's Representative

By: N/A
Printed Name: _____
Title: _____

Date Signed: _____

RECOMMENDED BY:

_____
Engineer of Record

By:
N/A _____

Printed Name: _____

Title: _____

Date Signed: _____

APPROVED BY:
CITY OF PORT ORANGE
Department Head—Approval delegated by City Manager. Scope, schedule and cost changes above either $25K or limit of unforeseen conditions allowance go to City Council.

By:_____
Tim Burman, Community Development Director

Date Signed: 2-28-22

City Manager—Approval authority for changes up to either $25K or limit of unforeseen conditions allowance. Scope and schedule changes sent to City Council.

By: N/A
Wayne Clark, City Manager

Date Signed:_____

If Council approval is required:

By:_____
Printed Name: Don Burnette
Title: Mayor

Date Signed: 3/1/2022

Affirmed:

Robin L. Fenwick, MMC, City Clerk

Date Signed: 3/1/2022

AMENDMENT NO. 1
To Dude Solutions, Inc. Piggyback Agreement Dated January 11, 2021

THIS AMENDMENT NO. 1 ("2022 Amendment No.1") is made and entered into the day and year set forth hereinafter by and between the **CITY OF PORT ORANGE, FLORIDA**, a Florida municipal corporation located at 1000 City Center Circle, Port Orange, Volusia County, Florida 32129-4144 (the "City"), and **BRIGHTLY SOFTWARE, INC.** ("Contractor"), a Delaware corporation, formerly known as **DUDE SOLUTIONS, INC.**, whose principal address is 11000 Regency Parkway, Suite 400, Cary, North Carolina 27518, collectively "the Parties." The City and the Contractor are collectively referred to herein as the "Parties."

WHEREAS, The Parties entered into a Piggyback Agreement ("Piggyback") on January 11, 2021 for facilities management software solutions, in an amount not to exceed the appropriated budget, with a term commencing on January 11, 2021 and continuing until March 31, 2022; and

WHEREAS, on the 1st day of March 2022, the Parties executed Change Order No. 1 to the Piggyback, increasing the dollar amount by $15,295.00, from a total of $88,085.47 to $103,380.47, and increasing the time by 90 days resulting in a final completion date of June 29, 2022; and

WHEREAS, the Parties desire to extend the contract an additional ninety (90) days to allow for the completion of the project, and providing for the creation of up to 40 custom reports for the project, along with project management costs; and

WHEREAS, the Parties desire to amend the contractor corporate name from Dude Solutions, Inc. to Brightly Software, Inc., pursuant to Dude Solutions, Inc. filing a Name Change Amendment with the Florida Division of Corporations on May 9, 2022; and

WHEREAS, the Port Orange City Council has determined that the execution of this 2022 Amendment No.1 is beneficial to the citizens of the City of Port Orange.

NOW, THEREFORE, the Parties, for good and valuable consideration, the receipt and sufficiency of which are hereby acknowledged, agree as follows:

The foregoing recitals are true and correct and incorporated herein.

1. Notwithstanding the date of execution, Contractor's name is hereby amended from Dude Solutions, Inc. to Brightly Software, Inc. effective as of May 9, 2022.

2. *Term.* The Term of the Piggyback as amended is hereby extended. Notwithstanding the date of execution, the Piggyback shall continue for an additional period of ninety (90) days.

3. *Cost/Quote*. The Cost/Quote of the Piggyback, as previously amended, is hereby amended to include an additional scope of work for the provision of up to 40 custom templates and project management costs, attached hereto as **Exhibit "A"** and made a part hereof by this reference. It is understood and agreed that if the City does not require all 40 custom templates, the Contractor shall refund the amount equal to the costs associated with the unused custom templates within sixty days of the completion of the scope of work as described herein.

4. *Counterparts*. This 2022 Amendment No.1 may be executed in one or more counterparts, each of which shall be deemed to be an original but all of which together shall constitute one and the same instrument. The delivery by facsimile or e-mail of an executed copy of this 2022 Amendment No.1 shall be deemed valid

as if an original signature was delivered. No contract shall be formed between Contractor and the City until the City signs this 2022 Amendment No.1.

5. All other terms and conditions of the Piggyback shall remain in full force and effect.

IN WITNESS WHEREOF, the Parties hereto have signed, sealed, and delivered this 2022 Amendment No.1 on the day and year stated hereinafter.

Witnesses:

BRIGHTLY SOFTWARE, INC.
FORMERLY KNOWN AS, DUDE SOLUTIONS, INC.

_____
Printed Name:_____

By:_____
Printed Name and Title _____,_____
If this Contract is signed by an individual not identified as officer or authorized person of the entity in the records of the Florida Department of State, Division of Corporations, please provide written authorization for that individual to enter into contracts on behalf of the entity.

_____
Printed Name:_____

Date:_____

STATE OF _____
COUNTY OF _____

The foregoing instrument was acknowledged before me by means of ___ physical presence or ___ online notarization, this _____ day of _____, 2022, by _____, as _____ of Brightly Software, Inc., a Delaware corporation, formerly known as Dude Solutions, Inc. He/She is ___ personally known or ___ produced _____as identification.

_____
Notary Public, State of _____
Printed, typed or stamped name, commission and expiration:

Witnesses:

CITY OF PORT ORANGE

_____
Printed Name:_____

By:_____
Wayne Clark, City Manager

_____
Printed Name:_____

Date:_____

STATE OF FLORIDA
COUNTY OF VOLUSIA

The foregoing instrument was acknowledged before me by means of ___ physical presence or ____ online notarization, this _____ day of _____, 2022, by Wayne Clark, City Manager of the City of Port Orange, a Florida municipal corporation, on behalf of the city. He is ____ personally known or ____ produced _____as identification.

_____
Notary Public, State of Florida
Printed, typed or stamped name, commission and expiration:

Witnesses:

ATTEST:

_____
Printed Name:_____

By:_____
Robin L. Fenwick, MMC, City Clerk

_____
Printed Name:_____

Date:_____

STATE OF FLORIDA
COUNTY OF VOLUSIA

The foregoing instrument was acknowledged before me, by means of ___ physical presence or ____ online notarization, this _____ day of _____, 2022, by Robin L. Fenwick, as City Clerk of the City of Port Orange, a Florida municipal corporation, on behalf of the city. She is ____ personally known or ____ produced _____as identification.

_____
Notary Public, State of Florida
Printed, typed or stamped name, commission and expiration:

EXHIBIT "A"

PREPARED FOR

City Of Port Orange ("Subscriber")

Tim Burman
Community Development Director
1000 City Center Circle
Port Orange, FL 32129

PREPARED BY

Brightly Software Inc ("Company")

11000 Regency Parkway, Suite 400

Cary, NC 27518

Dude Solutions is now Brightly. Same world-class software, new look and feel.

Meet Brightly at brightlysoftware.com

PUBLISHED ON

May 27, 2022

This SOW has been defined to leverage Brightly's experience, while optimizing the use of resources, thereby maximizing cost efficiencies on behalf of Client.

Based on our current understanding of the complexity and scope of this effort and the expected involvement of the Brightly team resources, the current estimated Fixed Price for this engagement is shown in the Investment table. This estimated cost breakdown is as follows:

Professional Services		
Item	**Pricing Based On**	**Investment**
Custom Reports	40 Report(s)	19,000.00 USD
Project Management	One-Time	2,850.00 USD
		Subtotal: 21,850.00 USD
Total Initial Investment		**21,850.00 USD**

The above level of effort and associated pricing is based on the SMARTGOV package selected by City Of Port Orange and is subject to change based on defined client requirements that may be discovered during project delivery. Any identified project scope or requirements changes will be addressed via the Company's Change Control Authorization ("CCA") process.

Introduction

Brightly Software, Inc. ("Company") is pleased to submit this Statement of Work ("SOW") to City Of Port Orange for SmartGov Professional Services. SmartGov streamlines permitting, planning/zoning, Inspections, code enforcement, and business licensing, providing efficiency for your jurisdiction and enhanced customer service for your citizens. The package City Of Port Orange has chosen for implementation of SmartGov will be implemented using proven processes and methodologies managed by an experienced project manager dedicated to delivering a successful project.

Company looks forward to the opportunity to deliver these services and the ever-lasting development of a strong business partnership.

Custom Reports

The Company will build a report that has been designed and scoped by the client and provided as a PDF or Word that represents a version of the final output of the report.

We will do a maximum of 2 revisions. Any additional revisions will require the purchase of an additional custom report.

Change Control Authorization Process

Any changes to the defined scope will require a signed Change Order by the client. This Change Order will outline the additional work required and costs associated with the change. It will also include estimated changes to your launch schedule that must also be approved.

Order Form terms

- By accepting this Order Form, and notwithstanding anything to the contrary in any other purchasing agreement, Subscriber agrees to pay all relevant Fees for the full Services Term defined above.
- The "Effective Date" of the Agreement between Subscriber and Company is the date Subscriber accepts this Order Form.
- This Order Form and its Services are governed by the terms of the Brightly Software, Inc. Master Subscription Agreement found at http://brightlysoftware.com/terms (http://brightlysoftware.com/terms) ("Terms"), unless Subscriber has a separate written agreement executed by Brightly Software, Inc. ("Company") for the Services, in which case the separate written agreement will govern. Acceptance is expressly limited to these Terms. ~~Any additional or different terms proposed by Subscriber (including, without limitation, any terms contained in any Subscriber purchase order) are objected to and rejected and will be deemed a material alteration hereof.~~
- To the extent professional services are included in the Professional Services section of this Order Form, the Professional Services Addendum found at http://brightlysoftware.com/terms (http://brightlysoftware.com/terms) is expressly incorporated into the Terms by reference.
- During the Term, Company shall, as part of Subscriber's Subscription Fees, provide telephone and email support ("Support Services") during the hours of 8:00 AM and 6:00 PM EST, (8:00 am – 8:00 pm EST for Community Development Services) Monday through Friday ("Business Hours"), excluding Company Holidays.
- ~~Unless otherwise specified on this Order Form, Company maintains the right to increase Subscription Fees within the Services Term by an amount not to exceed the greater of 6% or the applicable CPI and other applicable fees and charges every 12 months. Any additional or renewal Service Terms will be charged at the then-current rate.~~
- Acceptance of this Order Form on behalf of a company or legal entity represents that you have authority to bind such entity and its affiliates to the order, terms and conditions herein. If you do not have such authority, or you do not agree with the Terms set forth herein, you must not accept this Order Form and may not use the Service.
- Proposal expires in sixty (60) days.
- ~~Subscriber shall use reasonable efforts to obtain appropriation in the full amount required under this Order Form annually. If the Subscriber fails to appropriate funds sufficient to maintain the Service(s) described in this Order Form, then the Subscriber may terminate the Service(s) at no additional cost or penalty by giving prior written notice documenting such non-appropriation. Subscriber shall use reasonable efforts to provide at least thirty (30) days prior written notice of non-appropriation. Subscriber agrees non-appropriation is not a substitute for termination for convenience, and further agrees Service(s) terminated for non-appropriation may not be replaced with functionally similar products or services prior to the expiration of the Services Term set forth in this Order Form. Subscriber will not be entitled to a refund or offset of previously paid, but unused Fees.~~

Additional information

- Prices shown above do not include any taxes that may apply. Any such taxes are the responsibility of Subscriber. This is not an invoice. For customers based in the United States, any applicable taxes will be

determined based on the laws and regulations of the taxing authority(ies) governing the "Ship To" location provided by Subscriber. Tax exemption certifications can be sent to accountsreceivable@brightlysoftware.com (mailto:accountsreceivable@brightlysoftware.com).

- Billing frequency other than annual is subject to additional processing fees.
- Please reference Q-301327 on any applicable purchase order and email to accountsreceivable@brightlysoftware.com (mailto:accountsreceivable@brightlysoftware.com)
- Brightly Software, Inc. maintains the necessary liability coverage for its products and professional services. Proof of insurance can be provided upon request.

Signature

Presented to:

Q-301327
May 27, 2022, 2:38:33 PM

Accepted by:

See page 4 of the Amendment for signature.

Printed Name

Signed Name

Title

Date

CITY COUNCIL AGENDA ITEM

COUNCIL MEETING DATE 9/20/2022

SUBJECT: (C8h) Approval of one-month extension to the Annual Service and Trap Neuter Release (TNR) Agreement with Halifax Humane Society (HHS)

DEPARTMENT: Police Services

GOAL: 3 - Quality of Life

RECOMMENDED MOTION: Move to approve the one-month extension to the services contract with Halifax Humane Society and authorize the Mayor and City Clerk to execute all contract documents.

SUMMARY: The Halifax Humane Society (HHS) has proposed a new service agreement for the City's consideration. The proposed services agreement was not provided to the City with sufficient time for review prior to the expiration of the current agreement. Thus, the City has requested a one-month extension of the existing agreement in order to review the new agreement proposed by HHS and provide comments prior to City Council's review and consideration. The new agreement will be on the City Council Agenda on October 18. We expect increases in the costs of services provided by HHS.

PRESENTER: Manuel Marino

ATTACHMENTS:

1.	HALIFAX HUMANE SOCIETY FY23	HALIFAX HUMANE SOCIETY FY23.pdf

Eric Fisher	Created/Initiated - 8/30/2022
Manuel Marino	Approved - 8/30/2022
John McKinney	Approved - 8/31/2022
Matthew Jones	Approved - 9/14/2022
Wayne Clark	Approved - 9/14/2022
Robin Fenwick	Final Approval - 9/15/2022

AGREEMENT FOR SERVICES BETWEEN
Halifax Humane Society, Inc.
AND
City of Port Orange

This Services Agreement ("Agreement") is hereby entered into by and between the **Halifax Humane Society, Inc.**, a Florida non-profit corporation, with its principal address at 2364 LPGA Boulevard, Daytona Beach, Florida 32124 ("Humane Society"), and the **City of Port Orange**, a Florida Municipal corporation. ("Impounding Agency").

WHEREAS, in order to enforce the ordinances of the Impounding Agency and the laws of the State of Florida, the Impounding Agency desires to deliver animals to the Humane Society for the humane impoundment and humane disposition of said animals; and

WHEREAS, the Humane Society is organized for the purpose, among others, of preventing cruelty to animals and is interested in assuring that impounded animals are sheltered in a humane manner and those which must be euthanized, be so euthanized in a humane manner.

NOW, THEREFORE, for and in consideration of the mutual covenants, conditions and provisions herein contained, it is expressly agreed and understood as follows:

1. **TERM**: This Agreement will take effect on the 1st day of October 2022, and will remain in full force and effect for an initial twelve (12) month period ending on midnight between September 30, 2023 and October 1, 2023. The parties shall have the option to enter into extended contract negotiations if they so desire.

2. **ANIMAL SHELTER, RETURN TO FIELD, AND TRAP, NEUTER, AND RETURN**:

   (a) The Humane Society will maintain and operate an animal shelter ("Shelter") in a manner adequate for the confinement, remedial treatment, and, if necessary, disposal of stray dogs, cats, or other animals, which may be delivered to the Humane Society from within the jurisdictional limits of the Impounding Agency, and the Humane Society will furnish, at its sole expense, all supervision, labor, animal food, tools, supplies and other things necessary for the satisfactory performance of the services herein agreed to be provided. Remedial care will be provided for injured animals during operating hours when there is a staff veterinarian available, at the Humane Society's sole expense. The Shelter will be operated at 2364 West LPGA Blvd., Daytona Beach, Florida.

   (b) The Humane Society will provide means to accept all stray dogs and other domesticated animals delivered to the Shelter by the Impounding Agency's law enforcement personnel, Animal Control Officers, or other designated officers appointed by the Impounding Agency for this purpose. The Humane Society will provide alternative options of Return to Field (RTF) for unsterilized community cats following national animal welfare organization recommendations for the most

humane practices with addressing cat overpopulation. The Humane Society will accept wild animals and livestock only if it has the ability and facilities to impound and control these animals, and the decision to accept or reject such animals will be solely within the discretion of the Humane Society. The Humane Society will require all persons who drop off injured or stray animals to the Shelter during the Shelter's normal operating hours to give their names, telephone number, current home and post office addresses, and identify the place where the animals involved were located or picked up.

(c) When the Impounding Agency delivers an animal to the Shelter for impoundment and such animal bears information indicating ownership of the animal, the Impounding Agency representative shall use its best efforts to attempt to return the animal to its rightful owner, when safe for the animal to do so. The Impounding Agency representative shall also provide to Halifax all owner/guardian contact information gathered and documented attempts of contact for the owner/guardian. An administrative fee of $35 will be assessed for every animal found to have identification by means of collar with information, tag or microchip that the owner/guardian has not been attempted to contact and provided documentation of such. Regardless of the foregoing, any animal suspected of being infected with rabies or which has bitten or otherwise exposed any person to rabies, shall not be released to its owner until after such animal has been impounded for the required quarantine timeframe and the Volusia County Health Department, through its authorized representatives, has expressly approved, in writing, any such release.

(d) When a stray domestic animal is delivered to the Shelter and is not suspected of having rabies or has not bitten or otherwise exposed any person to rabies, the Humane Society will impound the animal at the Impounding Agency's expense for a period of three (3) calendar days (unless the cat is referred to the Return to Field (RTF) program as described below). There will be a 24-hour only holding period for dogs under 6 months of age when 2 or more are impounded together and no holding period for cats under the age of 6 months provided there is no owner identification. If the owner has not retrieved the animal within the designated holding period, the Humane Society will thereafter, at its own expense, provide for the adoption or humane disposal of the animal in accordance with its routine methods and procedures.

(e) When a stray cat is delivered to the Shelter and is not suspected of having rabies or has not bitten or otherwise exposed any person to rabies, the Humane Society will determine the eligibility of the animal for the RTF Program. After consultation, the Humane Society will decide whether the cat will be referred for impoundment or RTF and notify the Impounding Agency. The Impounding Agency representative will expressly inform the Humane Society if a cat is brought in as part of the Trap, Neuter, and Return Program (TNR) or Return to Field (RTF). The Humane Society will

only perform feline sterilization services for cats brought to the Humane Society by an Animal Control Officer (ACO) or other Impounding Agency designated representative. Cats brought to the Humane Society by any other person will not be eligible for reimbursement by the Impounding Agency. Fees for this service are listed in 3(b) under RTF/TNR Cats. The Impounding Agency will only be responsible for services or procedures that are requested and expressly included in this agreement. The Impounding Agency will not pay for any other service or procedure. The RTF/TNR Program requires the following:

i. The Humane Society and the Impounding Agency shall mutually agree on the day(s) of the week that the Impounding Agency will bring cats to the designated Humane Society facility. Said schedule shall be subject to change by mutual agreement of the parties. The Impounding Agency shall at a minimum have one day reserved each week at a designated Humane Society facility to bring in cats for sterilization.

ii. Surgeries may be completed at either:

Halifax Humane Society 2364 West LPGA Boulevard Daytona Beach, FL 32124
Or
HHS Redinger Clinic 600 Mason Ave #150 Daytona Beach, FL 32117

Hereafter Humane Society shall refer to both the location on LPGA Blvd. and Mason Ave.

iii. All regular sterilizations are the same price for neuters and spays (males and females). Each surgery includes complimentary ear tipping, FVRCP and rabies vaccines, and anesthesia for a cost of $45. Ear tipping must be completed according to Alley Cat Allies recommendations by removing at least 3/8 of an inch from the top of the left ear.

iv. If the Impounding Agency presents a cat for sterilization and the Humane Society finds the cat has already been sterilized, the Humane Society will provide anesthesia, ear tipping, FVRCP and rabies vaccine at the normal sterilization surgery cost of $45.

v. The Humane Society recognizes that the Impounding agency may not have a licensed veterinarian on staff and would not have the ability to determine whether an animal should be euthanized. Therefore, upon presentation of a cat, the Humane Society, at its sole discretion, will determine if the cat is healthy enough to survive surgery and whether or not it should be euthanized. The cost for euthanasia is $45.

vi. All cats being returned to the Impounding Agency staff from the Humane Society will have their ear tipped as described above. No exceptions. If a cat is returned to the Impounding Agency staff without an ear tip, or with an ear tip of less than 3/8 of an inch from the top of the left ear, the Impounding Agency cat will be returned to the Humane Society for the procedure without any additional charge to the Impounding agency.

vii. No procedures other than those listed in this document will be paid for by the Impounding agency. The Impounding agency will only reimburse for procedures that have been documented and provided to the Impounding agency. The Humane Society must provide at least the following information in order to receive reimbursement for each cat:

- Invoice number
- Visit Date
- Billing Date
- Animal Name and/or Number
- Services provided
- Cost for each service provided
- Total cost

viii. The Humane Society will combine and send all invoices to the Impounding Agency, monthly.

ix. Animal Control Officers will notify the Humane Society staff at the LPGA location whether a feline brought there is not eligible for RTF due to being confiscated, seized or under quarantine.

x. The Humane Society will only release RTF cats to the Impounding Agency Animal Control Officer unless Impounding Agency provides permission for a 3rd party release in writing from the agency's authority.

3. **BILLING & PAYMENT**:

(a) The Humane Society shall bill the Impounding Agency pursuant to Paragraph 3(b), as applicable, for:

(i) each dog or cat, domesticated animal, injured animal, deceased animal, livestock animal, wild animal, or quarantined/confiscated animal delivered to the Shelter by either the Impounding Agency's designated personnel, Law Enforcement, or Animal Control Officers;

(ii) each stray dog or cat, domesticated animal, injured animal, deceased animal, livestock animal or wild animal emanating from within the jurisdictional limits of the Impounding Agency and delivered to the Shelter by a private citizen. Owner surrendered animals will only be accepted via Impounding Agency with prior

Supervisor approval from Halifax Humane Society and fees for this service are listed in 3(b) under Owner Surrender – via ACO. Owner requested surrenders in the field should be referred to Halifax Humane Society directly; and

(iii) each dog or cat, domesticated animal, injured animal, or deceased animal picked up at the request of the Impounding Agency by the a member of the public within jurisdictional limits of the Impounding Agency.

(b) In consideration of the agreements and undertakings to be performed by the Humane Society, the Impounding Agency agrees to pay the following applicable fee(s) per animal to the Humane Society on a monthly basis, in arrears:

Type of Animal	**Fee**
Dog or cat (if the cat is not eligible for RTF/TNR program)	
Stray Sheltering (up to 3 days)	$120
Administrative Fee - failure to reunite/contact known owners	$35
Owner Surrender via Animal Control Officer	$120
Other small domesticated pets	$100
Livestock/Wildlife	$150
Wild animal - (Euthanasia)	$55.00
Deceased on arrival - (Disposal)	$25.00
Quarantined animal (*e.g.*, Rabies)	$100 fee plus $30 per additional day Quarantine period determined by Florida State Statute
Confiscated animals – Due to police custody, hospitalization, owner deceased, subject to eviction, or pending court case	$120 fee (includes up to 3 days of impoundment) $21 for each additional day of impoundment
Fees for RTF/TNR cats	
Sterilization Surgery Complimentary ear tipping, FVRCP, Rabies Vaccines	$45
Anesthesia Fee No surgery performed, ear tipping, FVRCP vaccine, rabies vaccine	$45
Euthanasia Veterinarian determined that patient cannot undergo surgery due to illness/disease	$45
Fees for Additional Services **Forensic calls and staff assistance**	Staff Support: $25.00 per hr. Veterinarian Support: $125.00 per hr.

(c) Payment must be made to the Humane Society within forty-five (45) days of the date of a proper invoice, as required by the Florida Local Government Prompt Payment Act (Part VII, Chapter 218, Florida Statutes) (the "Prompt Payment Act"). As provided by the Prompt Payment Act, any payment that is not made by the Impounding agency within such time period shall bear interest from thirty (30) days

after the due date at a rate of one percent (1%) per month on the unpaid balance until paid in full. If the Impounding agency has a dispute about a charge on its invoice, it must contact the Humane Society's Director of Administrative Services at 386-274-4703, extension 315, within fifteen (15) days of the date of the invoice.

(d) The Humane Society will submit to the Impounding Agency, with its monthly invoice, a list of all pick up addresses of stray animals charged to the Impounding Agency account for animals that were not impounded by an Impounding Agency's designated personnel, the names and addresses of all persons claiming any stray animals that are dropped off at the Shelter during normal operating hours. After hours animal drop off not permitted.

(e) The Humane Society will use good faith efforts to try to collect from the animal's owner costs for which the Impounding Agency is otherwise liable hereunder. In the event an owner pays any fees or charges to reclaim its animal, the Impounding Agency shall be credited half any such fees or charges are paid.

4. **RABIES QUARANTINE**: The Humane Society will provide space for the confinement, observation and care of any stray animal suspected of rabies, or any stray animal which has bitten or otherwise exposed any person to rabies for a period of the state determined time for quarantine and will accept, care for, and dispose of any such animal delivered to the Shelter. The Humane Society will notify the Volusia County Health Department of any rabies specimen animal that dies during the quarantine period, and will allow the Volusia County Health Department the opportunity to take custody of the remains of any such animal that becomes ill or dies while under confinement for such reasons. The Impounding Agency shall pay the applicable charges for quarantine service pursuant to Section 3(b) of this Agreement.

5. **CONFISCATED ANIMALS**: The Humane Society will agree to accept confiscated animals as strays or accept said animals as "confiscated" only when the provisions of Section 828.073, Florida Statutes are satisfied (*i.e.*, pursuant to a Court order after petition and hearing). The Impounding Agency shall be responsible for all charges and expenses incurred in confiscating an animal pursuant to § 828.073, Fla. Stat. The appropriate paperwork must be submitted by the seizing agent to the Humane Society within three (3) business days of impounding the confiscated animal. Failure to comply with this requirement will result in "confiscated" animals being deemed "stray" animals, at which point care of the animal will be charged to the Impounding Agency at the default "stray" rates provided in Section 3(b) of this Agreement. The Impounding Agency agrees to indemnify the Humane Society for any and all claims that may arise as a result of the Impounding Agency decision to submit the animal as a stray.

6. **DANGEROUS DOG LAW**: Pursuant to Sections 767.12 and 767.13, Florida Statutes, it will be the sole responsibility of the Impounding Agency's animal control authority to determine whether a dog is dangerous and to submit to the Humane Society the necessary paperwork as required by the applicable statutes. If quarantine is necessary, a dog quarantined pursuant to Sections 767.12 and 767.13, Florida Statutes, may be quarantined for ten (10)

business days at a bona fide boarding kennel or veterinarian's office of the seizing agent's or owner's choice. Otherwise, the Humane Society will quarantine all dogs that the Impounding Agency animal control authority determines to be dangerous for a maximum of ten (10) business days. The Impounding Agency shall pay the applicable charges for such service pursuant to Section 3(b) of this Agreement. If the owner of the dog is unknown by the end of the quarantine period, the Impounding Agency may request that euthanasia be performed by the Humane Society when it is the Impounding Agency's belief that the dog poses a threat to public safety. The Impounding Agency agrees to indemnify the Humane Society for any and all claims that may arise as a result of the Impounding Agency decision to submit the animal under the Dangerous Dog Law.

7. **CONFISCATED ANIMALS - OWNER OF ANIMAL IS IN CUSTODY / DECEASED / HOSPITALIZED**: All animals whose owners are in police custody, deceased or hospitalized may be placed in a bona fide boarding kennel or veterinary clinic at the owner's expense. The Humane Society will accept any such animals that are seized or taken by the Impounding Agency. The Impounding Agency agrees to provide next of kin, emergency contact or any other guardian information to Halifax within 3 days of impoundment. Failure to do so by the Impounding Agency will forfeit any hold on the animal other than the mandatory 3 day holding period for stray animals. The Impounding agency shall pay the applicable charges for such service (*i.e.*, "Confiscated Animal") pursuant to Section 3(b) of this Agreement. The Impounding Agency agrees to indemnify the Humane Society for any and all claims that may arise as a result of the Impounding Agency's decision to submit the animal as Confiscated/Owner of Animal in Custody/Deceased/Hospitalized.

8. **CONFISCATED ANIMALS DUE TO OWNER EVICTION**: Animals seized by the Impounding Agency as a result of an owner eviction will be held by the Humane Society for 5 days. The Impounding Agency agrees to leave notice of impoundment at the eviction location listing the whereabouts and descriptions of animal confiscated. Impounding agency's representative will provide proof of such notice, inform of agency report or photograph of notice on the dwelling with address or writ of possession displayed. If not reclaimed by the owner, all charges accrued pursuant to Section 3(b) will be paid by the Impounding Agency.

If the Impounding Agency chooses not to have the Humane Society hold the animal for the entire reclamation period referenced above, the Impounding Agency may submit the animal to the Humane Society as a "stray," in which case the animal will be held for three (3) days prior to disposition. The Impounding Agency agrees to indemnify the Humane Society for any and all claims that may arise as a result of the Impounding Agency's decision to submit the animal as a "stray". The Impounding agency shall pay the applicable charges for such service pursuant to Section 3(b) of this Agreement.

9. **REMEDY IN THE EVENT OF BREACH**: In the event that the Impounding Agency fails to make timely payment to the Humane Society for services rendered pursuant to this Agreement, the Humane Society, in its sole discretion, may elect to terminate this Agreement and cease

providing services to the Impounding Agency. If the Humane Society exercises this option, it will provide the Impounding Agency with thirty (30) days written notice of its decision to terminate the Agreement. The Impounding Agency will remain responsible for payment for all services rendered by the Humane Society prior to and during the thirty (30) day notice period. Upon expiration of the thirty (30) day notice period, the Humane Society will no longer provide any services to the Impounding Agency.

10. **WAIVER OF BREACH**: The waiver by the Humane Society or the Impounding Agency of any breach or violation of this Agreement will not operate as or be construed to be a waiver of any subsequent breach of this Agreement.

11. **SOVEREIGN IMMUNITY:** The Impounding Agency expressly retains all rights, benefits, and immunities of sovereign immunity in accordance with §768.28, Florida Statutes. Notwithstanding anything set forth in any section of the Agreement to the contrary, nothing in the Agreement shall be deemed as a waiver of immunity of limits of liability of the Impounding Agency beyond any statutory limited waiver of immunity or limits of liability which may have been adopted by the Florida Legislature or may be adopted by the Florida Legislature, and the cap on the amount and liability of the Impounding Agency for damages, regardless of the number or nature of claims in tort, equity, or contract, shall not exceed the dollar amount set by the legislature for tort. Nothing in this Agreement shall inure to the benefit of any third party for the purpose of allowing any claim against the Impounding Agency, which would otherwise be barred under the Doctrine of Sovereign Immunity or by operation of law.

12. PUBLIC RECORDS: Pursuant to section 119.0701 (2)(a), Florida Statutes, the Impounding Agency is required to provide the Humane Society with this statement and establish the following requirements as contractual obligations pursuant to the Agreement:

IF THE HUMANE SOCIETY HAS QUESTIONS REGARDING THE APPLICATION OF CHAPTER 119, FLORIDA STATUTES, TO THE HUMANE SOCIETY'S DUTY TO PROVIDE PUBLIC RECORDS RELATING TO THIS AGREEMENT, CONTACT THE CUSTODIAN OF PUBLIC RECORDS AT 386-736-5935, purchasing@volusia.org, by mail, Purchasing and Contracts Division, Attn: Public Records Custodian, 123 W. Indiana Ave. RM 302 DeLand, FL 32720.

By entering into this Agreement, the Humane Society acknowledges and agrees that some records maintained, generated, received, or kept in connection with, or related to the performance of services provided under, this Agreement are public records subject to the public records disclosure requirements of section 119.07(1), Florida Statutes, and Article I, section 24 of the Florida Constitution. Pursuant to section 119.0701, Florida Statutes, any contractor entering into a contract for services with the Impounding Agency, including the Humane Society, is required to comply with the following with respect to the applicable public records:

a) Keep and maintain public records required by the Impounding Agency to perform the services and work provided pursuant to this Agreement.

b) Upon request from the Impounding Agency's custodian of public records, provide the Impounding Agency with a copy of the requested records or allow the records to be inspected or copied within a reasonable time at a cost that does not exceed the cost provided in Chapter 119, Florida Statutes, or as otherwise provided by law.

c) Ensure that public records that are exempt or confidential and exempt from public records disclosure requirements are not disclosed except as authorized by law for the duration of the contract term and following completion of the contract if the contractor does not transfer the records to the Impounding Agency.

d) Upon completion of the contract, transfer, at no cost, to the Impounding Agency all public records in the possession of the contractor or keep and maintain public records required by the Impounding Agency to perform the service. If the contractor transfers all public records to the Impounding Agency upon completion of the contract, the contractor shall destroy any duplicate public records that are exempt or confidential and exempt from public records disclosure requirements. If the contractor keeps and maintains public records upon completion of the contract, the contractor shall meet all applicable requirements for retaining public records. All records stored electronically must be provided to the Impounding Agency, upon request from the Impounding Agency's custodian of public records, in a format that is compatible with the information technology systems of the Impounding Agency.

e) Requests to inspect or copy public records relating to the Impounding Agency's contract for services must be made directly to the Impounding Agency. If contractor receives any such request, contractor shall instruct the requestor to contact the Impounding Agency. If the Impounding Agency does not possess the records requested, the Impounding Agency shall immediately notify the contractor of such request, and the contractor must provide the records to the Impounding Agency or otherwise allow the records to be inspected or copied within a reasonable time.

The Humane Society acknowledges that failure to provide the applicable public records to the Impounding Agency within a reasonable time may be subject to penalties under section 119.10, Florida Statutes. The Humane Society further agrees not to release any records that are statutorily confidential or otherwise exempt from disclosure without first receiving prior written authorization from the Impounding Agency. Humane Society shall indemnify, defend, and hold the Impounding Agency harmless for and against any and all claims, damage awards, and causes of action arising from Humane Society's failure to comply with the applicable public records disclosure requirements of section 119.07(1), Florida Statutes, or by Humane Society's failure to maintain any applicable public records that are exempt or confidential and exempt from the public records disclosure requirements, including, but not limited to, any third party claims or awards for attorney's fees and costs arising therefrom. Humane Society authorizes Impounding Agency to seek declaratory, injunctive, or other appropriate relief against Humane Society from a Circuit Court in Volusia County on an expedited basis to enforce the requirements of this section.

13. **MEDIATION**: Any dispute arising from this Agreement, including, but not limited to, disputes over fees for services, will be mediated prior to a lawsuit being filed. Mediation will occur within sixty (60) days of written request by either party to mediate unless agreed to otherwise. The written request must be delivered in accordance with the provisions of Paragraph 19, below, of this Agreement. The cost of the mediator's fee will be borne equally by the parties.

14. **ATTORNEY'S FEES**: Both parties agree to bear the cost of their own attorneys' fees with respect to any disputes, lawsuits, or claims arising under this Agreement, except unless otherwise specifically allowed elsewhere in this Agreement or in the event of an action to recover amounts due under Part VII, Chapter 218, Florida Statutes, in which case, the court shall award court costs and reasonable attorney's fees, including fees incurred through appeal, to the prevailing party.

15. **GOVERNING LAW AND VENUE:** The parties further agree that this Agreement will be governed by the laws of the State of Florida and that venue for any and all suits arising out of or otherwise attributable to this Agreement will lie exclusively in the courts of Volusia County, Florida, unless the matter at issue is solely cognizable in federal court, in which case, venue shall be in the Middle District of Florida, Orlando Division.

16. **SEVERABILITY**: If any provision of this Agreement or any part of any provision of this Agreement is found to be invalid by a court of competent jurisdiction, such will not affect the validity of any other provision, or part thereof, of this Agreement.

17. **ENTIRE AGREEMENT**: This Agreement constitutes the entire and final understanding and agreement with respect to the subject matter hereof and supersedes all prior or contemporaneous negotiations, promises, covenants, agreements, or representations concerning all matters directly or indirectly, collaterally related to the subject matter of this Agreement.

18. **AMENDMENTS**: This Agreement cannot be amended or modified except by writing executed by both of the parties hereto or their respective administrators, trustees, personal representatives, and successors.

19. **NOTICES**: Any written notice required to be given under this Agreement is to be mailed by registered or certified mail, postage prepaid, to the party's business address or any other address designated for that purpose by written notice and sent to the attention of the Impounding Agency Manager with respect to the Impounding Agency and to the attention of the CEO with respect to the Humane Society.

IN WITNESS WHEREOF, the Humane Society and the Impounding agency have executed this Agreement for Services between Halifax Humane Society Inc. and the City of Port Orange, effective on the date and year as set forth above.

HALIFAX HUMANE SOCIETY, INC.

By: Pam Clayton
Name: Pam Clayton
Title: Chief Executive Officer
Date: 8/30/2022

ATTEST:

By: _____
Name: Christina Sutherin
Title: Chief Operating Officer
Date: 8/30/2022

CITY OF PORT ORANGE

By: _____
Name: Donald Burnett
Title: Mayor
Date: _____

ATTEST:

By: _____
Name: Wayne Clark
Title: City Manager
Date: _____

CITY COUNCIL AGENDA ITEM

COUNCIL MEETING DATE 9/20/2022

SUBJECT: (C8i) Approval to Renew the City's Property and Casualty Insurance / Loss Control and Prevention Services

DEPARTMENT: Administrative Services

GOAL: 5 - Financial Sustainability
6 - Organizational Excellence

RECOMMENDED MOTION: Move to approve the renewal of insurance policies covering Property, Auto, General, Workers' Compensation, Inland Marine, Crime, Equipment Breakdown, Public Officials, Cyber, and Law Enforcement in the amount not to exceed $1,439,876 and to authorize the Mayor and City Clerk to execute all necessary documents, subject to receipt and acceptance of the policy.

SUMMARY: In March 2018, the City issued a Request for Proposal for Property and Casualty Insurance/Loss Control and Loss Prevention Services. The RFP provided for an initial term of one year (10/01/2018 through 09/30/2019), with four optional one-year renewals. This renewal is the fourth and final renewal of this agreement.

For our property lines of coverage, our carrier contracted with Asset Works Inc., a property appraisal company, in July 2022 to conduct an on-site assessment of all the city-owned property to determine the market value of all of our assets. As a result of the current real estate market within Florida, we received a higher appraisal. With the rising property values, our carrier factors in potential overall losses when purchasing re-insurance. Also, the carrier has fewer avenues to purchase the required re-insurance due to more companies moving out of the Florida market.

For our Workers Compensation coverage, we have experienced higher than average claims. The City's look-back period is based on a four fiscal year claims experience and we are now being evaluated on Fiscal Year 2018, though Fiscal Year 2021 with Fiscal Year 2017 dropping off, which had a lower exposure cost than Fiscal Year 2021, which had a higher than normal exposure cost. This has resulted in workers' compensation mod-rate increasing by 18%.

Across all lines of coverage, the city's loss summary ratio has increased for this specified look back period from 89% to 191%. An optimal loss summary would be below 75% across all categories. The Fiscal Year 2023 premiums are projected to increase by 27% to $1,439,876. All lines of coverage are included in the proposed Fiscal Year 2023 budget.

Staff has provided a chart showing the rate comparison which breaks down the major lines of insurance covered under Risk Management.

PRESENTER: Marla Callanan

ATTACHMENTS:

1.	FY23 Insurance Plan Summary	9-20 FY23 Insurance Plan Summary.pdf

Marla Callanan	Created/Initiated - 9/9/2022
Melonie Donnally	Approved - 9/9/2022
John McKinney	Approved - 9/14/2022
Matthew Jones	Approved - 9/15/2022
Wayne Clark	Approved - 9/15/2022
Robin Fenwick	Final Approval - 9/15/2022

Major Risk Management Insurance Plan Summary
FY22 through FY23

Brown & Brown-Brokered Policies						
Coverage	**FY22 Property Values**	**FY 22 Premium**		**FY23 Property Values**	**FY23 Premium**	
Property*	$ 112,949,206.00	$ 300,511.00		$ 112,949,206.00	$ 431,673.00	
Inland Marine	$4,230,580.00	$ 15,230.00		$ 5,069,495.00	$ 18,057.00	
Equipment Breakdown		$ 6,096.00			$ 6,218.00	
Crime		$ 3,369.00			$ 3,436.00	
Public Officals/EPLI/CYBER		$ 64,544.00			$ 80,731.00	
Auto Liability		$ 61,518.00			$ 72,961.00	
Auto Physical Damage		$ 46,735.00			$ 55,274.00	
Law Enforcement		$ 107,605.00			$ 127,798.00	
General Liablity		$ 111,589.00			$ 141,073.00	
TOTAL		**$ 1,132,819.00**			**$ 1,439,876.00**	

* appraisles have not returned with current values; will have to true up once the appraisles return (project cost is $75k still with in the 30% that was budgetd for renewl cost.

	FY22	FY23	
Workers Compensation			
Experience Modification	1.13	1.31	Up 18%
Payroll	$ 23,076,110.00	$ 24,167,638.00	
Net Premium	$ 415,622.00	$ 502,655.00	

EXCESS WORK COMP / WORK COMP									
FY	**Annual Premium**	**No. of Claims**	**Indemnity Paid**	**Indemnity Reserve**	**Expense/legal Paid**	**Expense/Legal Reserve**	**Ded/Rec/Sub Collected**	**Ded/Rec/Sub Expected**	**Total Incurred**
21-22	$ 415,622	38	$ 52,775.43	$ 127,420.71	$ 50,990.79	$ 67,368.47	$ -	$ (223,055.00)	**$ -**
20-21	$ 405,206	59	$ 258,949.04	$ 210,723.79	$ 180,307.10	$ 119,480.29	$ (500.00)	$ (431,782.00)	**$ -**
19-20	$ 388,300	33	$ 323,298.99	$ 32,723.41	$ 68,974.15	$ 15,239.41	$ -	$ (201,410.00)	**$ 75,500**
18-19	$ 433,751	37	$ 345,224.79	$ 66,667.48	$ 55,667.46	$ 45,185.32	$ (5,486.33)	$ (219,516.67)	**$ 337,178**
Totals	**$ 1,642,879**	**167**	**$ 980,248**	**$ 437,535**	**$ 355,940**	**$ 247,273**	**$ (5,986)**	**$ (1,075,764)**	**$ 412,679**

CITY COUNCIL AGENDA ITEM

COUNCIL MEETING DATE 9/20/2022

SUBJECT: (C9) Resolution No. 22-27- Partial Utility Easement Vacation at Lot 24, Brandy Hills Unit 1 Subdivision (24 Tula Drive)

DEPARTMENT: Community Development

GOAL: 3 - Quality of Life

RECOMMENDED MOTION: Move to approve Resolution No. 22-27 to vacate a 2.5-foot x 65.45-foot wide portion of the existing 7.5-foot wide Drainage & Utility Easement on Lot 24 of Brandy Hills Unit 1 Subdivision.

SUMMARY: Community Development has received an easement vacation application for a partial vacation of an existing Utility Easement to accommodate the construction of a pool deck and pool screen enclosure. The subject property, Lot 24 in the Brandy Hills Unit 1 Subdivision, is located at 24 Tula Drive. There is a platted 7.5-foot-wide Utility Easement along the rear property line. The property owners, Stephen and Michelle Costello, met with City staff regarding the proposed partial easement vacation and there is no staff objection to the vacation of a 2.5-foot x 65.5-foot portion or +/- 164 square feet of the existing 7.5-foot-wide Utility Easement (+/- 566 square feet) along the rear property line.

City departments have reviewed the application and have no outstanding concerns. There are no planned drainage or utility improvements proposed for the subject area. All franchise utility companies have provided a release letter for the subject area. The easement vacation application and legal description have been reviewed for completeness and accuracy. The easement area requested to be vacated is shown below and as described in the attached Resolution.

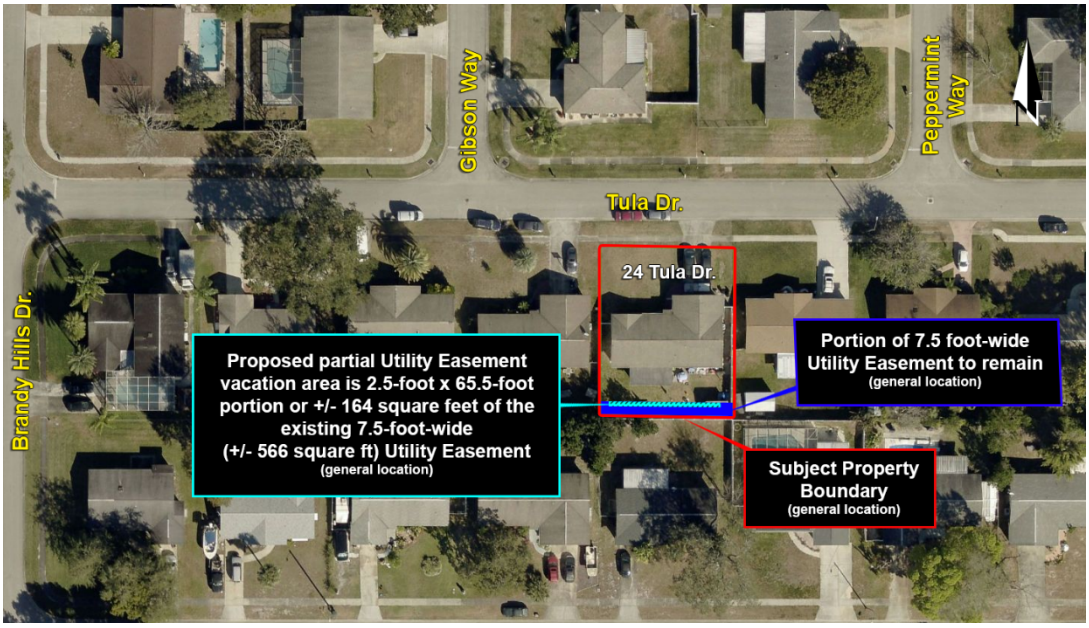

PRESENTER: Tim Burman

ATTACHMENTS:

1.	Resolution No. 22-27 with exhibit	9-20 Reso. No. 22-27 Partial Easement Vacation - Tula Drive.pdf
2.	Proposed pool layout	Proposed pool layout.pdf

Lisa Epstein	Created/Initiated - 8/22/2022
Tim Burman	Approved - 8/31/2022
Shannon Balmer	Approved - 9/7/2022
Wayne Clark	Approved - 9/8/2022
Robin Fenwick	Final Approval - 9/8/2022

RESOLUTION NO.22-27

A RESOLUTION OF THE CITY COUNCIL OF THE CITY OF PORT ORANGE, VOLUSIA COUNTY, FLORIDA, VACATING A PORTION OF THE REAR YARD DRAINAGE AND UTILITY EASEMENT LOCATED AT 24 TULA DRIVE, LOT 24 OF BRANDY HILLS UNIT 1 SUBDIVISION PROVIDING AN EFFECTIVE DATE.

WHEREAS, Michelle I. Costello and Stephen Costello, II, are the record property owners of Lot 24, Brandy Hills Unit 1 Subdivision, according to the Warranty Deed recorded in Official Records Book 7875, Page 3864, Public Records of Volusia County, Florida, and has applied for the vacation of a 2.5-foot x 65.45-foot wide portion of the existing 15-foot-wide Drainage and Utility Easement located at the rear lot line of 24 Tula Drive, in connection with the construction of a pool and concrete decking; and

WHEREAS, the applicant has complied with the requirements of Section 177.101(4), Florida Statutes; and

WHEREAS, the City Council of the City of Port Orange has the power and authority to vacate publicly dedicated easements within the City limits under constitutional home rule powers and Chapters 166 and 177, Florida Statutes; and

WHEREAS, the City Council of the City of Port Orange has determined that the public's interest in that portion of the easement to be vacated is not required in its present location, and that it is in the best interest and welfare of the City of Port Orange and the citizens thereof to vacate and abandon that portion of the drainage and utility easement as more particularly described on the attached **Exhibit "A."**

NOW, THEREFORE, BE IT RESOLVED BY THE CITY COUNCIL OF THE CITY OF PORT ORANGE, VOLUSIA COUNTY, FLORIDA:

Section 1. The interest of the public in the portion of the utility easement depicted and described on the attached Exhibit "A," is hereby declared to be vacated and abandoned, and any right, title, and interest of the public in and to the attached easement hereby vacated are renounced and disclaimed. All other easements located within Lot 24, Brandy Hills Unit 1 Subdivision, according to Map Book 34, Page 110, Public Records, Volusia County, Florida, not previously vacated shall remain in full force and effect.

Section 2. By accepting this vacation of the drainage and utility easement, the Property Owner accepts full and sole responsibility for any damage to any private improvements placed or constructed within the vacated area.

Section 3. This resolution shall become effective immediately upon recording of a certified copy of this resolution in the Public Records of Volusia County, Florida.

_____
MAYOR DONALD O. BURNETTE

ATTEST

_____
Robin L. Fenwick, MMC, City Clerk

Adopted on the _____ day of _____, 2022

Reviewed and Approved: _____
Shannon K. Balmer, Assistant City Attorney

EXHIBIT "A"

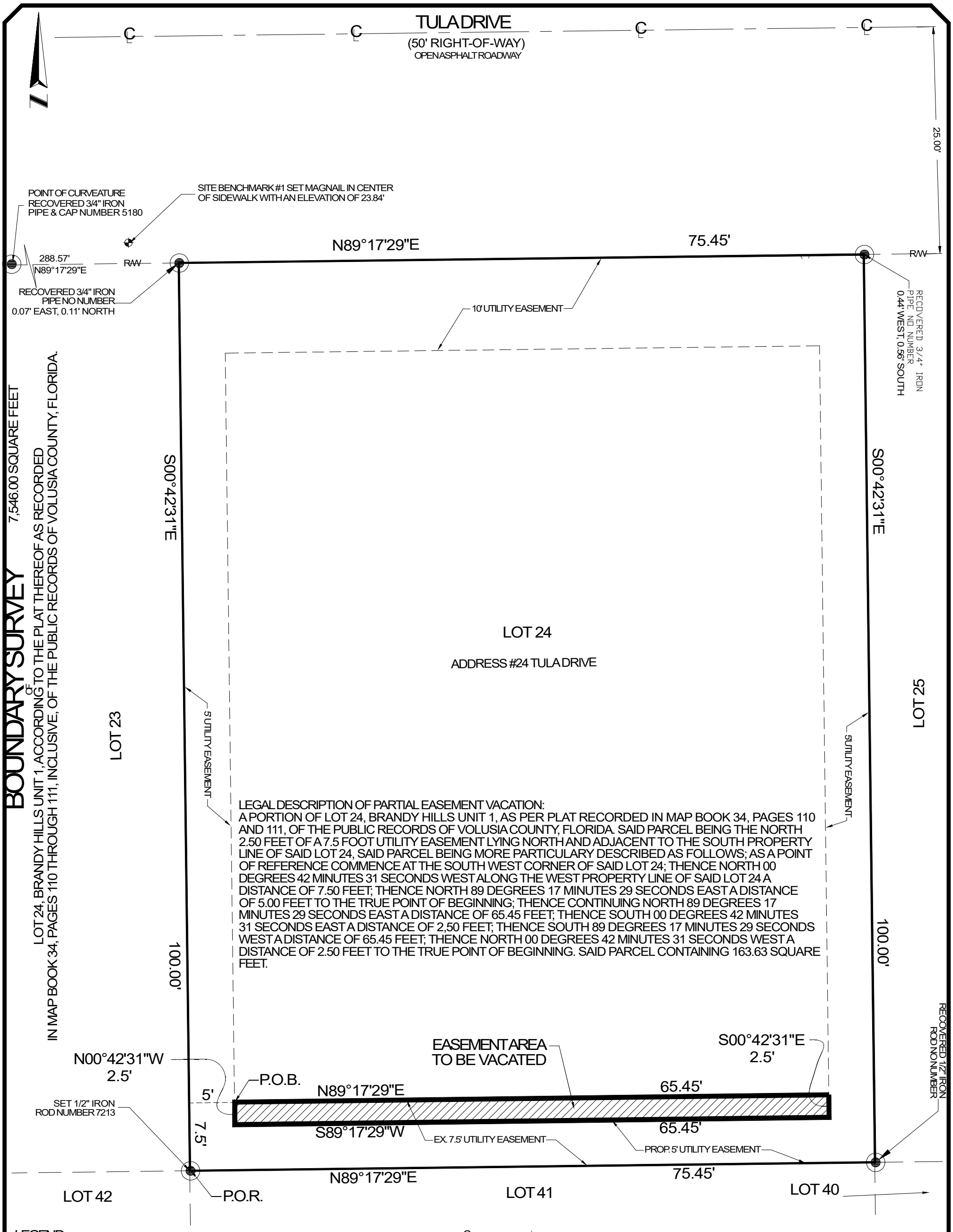

LEGAL DESCRIPTION OF PARTIAL EASEMENT VACATION:
A PORTION OF LOT 24, BRANDY HILLS UNIT 1, AS PER PLAT RECORDED IN MAP BOOK 34, PAGES 110 AND 111, OF THE PUBLIC RECORDS OF VOLUSIA COUNTY, FLORIDA. SAID PARCEL BEING THE NORTH 2.50 FEET OF A 7.5 FOOT UTILITY EASEMENT LYING NORTH AND ADJACENT TO THE SOUTH PROPERTY LINE OF SAID LOT 24, SAID PARCEL BEING MORE PARTICULARY DESCRIBED AS FOLLOWS; AS A POINT OF REFERENCE COMMENCE AT THE SOUTH WEST CORNER OF SAID LOT 24; THENCE NORTH 00 DEGREES 42 MINUTES 31 SECONDS WEST ALONG THE WEST PROPERTY LINE OF SAID LOT 24 A DISTANCE OF 7.50 FEET; THENCE NORTH 89 DEGREES 17 MINUTES 29 SECONDS EAST A DISTANCE OF 5.00 FEET TO THE TRUE POINT OF BEGINNING; THENCE CONTINUING NORTH 89 DEGREES 17 MINUTES 29 SECONDS EAST A DISTANCE OF 65.45 FEET; THENCE SOUTH 00 DEGREES 42 MINUTES 31 SECONDS EAST A DISTANCE OF 2,50 FEET; THENCE SOUTH 89 DEGREES 17 MINUTES 29 SECONDS WEST A DISTANCE OF 65.45 FEET; THENCE NORTH 00 DEGREES 42 MINUTES 31 SECONDS WEST A DISTANCE OF 2.50 FEET TO THE TRUE POINT OF BEGINNING. SAID PARCEL CONTAINING 163.63 SQUARE FEET.

LEGEND: REC.=RECOVERED; IP=IRON PIPE; IR=IRON ROD; (P).=PLAT; (M). = MEASURED; R/W=RIGHT-OF-WAY; ℄ CENTERLINE; ⊕ BENCHMARK; P.O.B.=POINT OF BEGINNING; P.O.C.=POINT OF COMMENCEMENT; P.O.R.=POINT OF REFERENCE

HALIFAX LAND SURVEYING
425 BUCHANAN WAY
SOUTH DAYTONA, FL 32119
(386) 767-5089

SURVEYORS NOTES:
1. THE SURVEYOR HAS NOT ABSTRACTED THE LAND SHOWN HEREON FOR EASEMENTS, RIGHT-OF-WAY OR RESTRICTIONS OF RECORD WHICH MAY AFFECT THE TITLE OR USE OF THIS LAND.
2. REPRODUCTIONS OF THIS SKETCH ARE NOT VALID WITHOUT THE SIGNATURE AND ORIGINAL RAISED SEAL OF THE FLORIDA LICENSED PROFESSIONAL SURVEYOR AND MAPPER NAMED BELOW IN THE SIGNATURE WINDOW.
3. BEARINGS SHOWN HEREON ARE BASED ON THE NORTHERN LINE OF LOT 24, BRANDY HILLS UNIT 1, BEING N89°17'29"E PER PLAT.

REVISIONS:
EASEMENT VACATION 08-19-2022

JOB NO. 2022-024	PARCEL # 6308-03-00-0240	SKETCH PLAN FOR EASEMENT VACATION
DATE: 8-19-2022	CALCULATED BY: CHR	
SCALE: 1" = 10 FEET	DRAWN BY: SJC	
FIELD BY: N/A	CHECKED BY: CHR	ADDRESS = 24 TULA DRIVE

FOR THE LICENSED BUSINESS #3502 BY:

CLYDE H. RODGERS, LS # 3290
SIGNATURE DATE: 08-19-2022

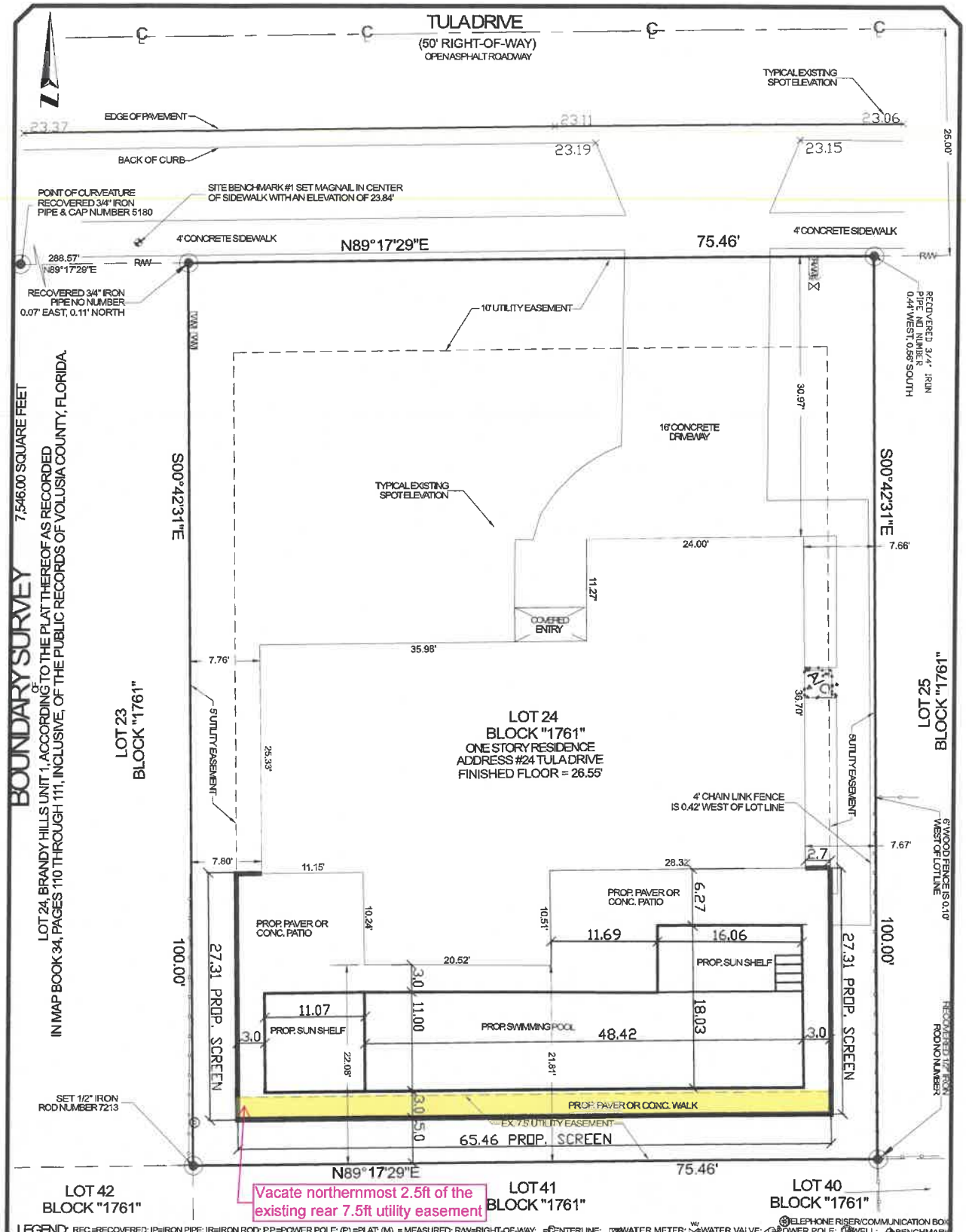

SURVEYOR'S NOTES:

THE SURVEYOR HAS NOT ABSTRACTED THE LAND SHOWN HEREON FOR EASEMENTS, RIGHT-OF-WAY OR RESTRICTIONS OF RECORD WHICH MAY AFFECT THE TITLE OR USE OF THIS LAND.
2. SUBJECT DWELLING FALLS WITHIN ZONE "X" ACCORDING TO THE F.I.R.M. MAP # 12127C0369 J, DATED SEPTEMBER 29, 2017.
3. NO UNDERGROUND INSTALLATIONS OR IMPROVEMENTS HAVE BEEN LOCATED EXCEPT AS SHOWN HEREON.
4. REPRODUCTIONS OF THIS SKETCH ARE NOT VALID WITHOUT THE SIGNATURE AND ORIGINAL RAISED SEAL OF THE FLORIDA LICENSED PROFESSIONAL SURVEYOR AND MAPPER NAMED BELOW IN THE SIGNATURE WINDOW.
5. BEARINGS SHOWN HEREON ARE BASED ON THE NORTHERN LINE OF LOT 24, BRANDY HILLS UNIT 1, BEING N89°17'29"E PER PLAT.
6. ELEVATIONS SHOWN HEREON ARE BASED ON THE NAVD 1988 VERTICAL DATUM.
7. THE SURVEY DEPICTED HEREON WAS PERFORMED WITHOUT THE BENEFIT OF A TITLE INSURANCE COMMITMENT.

REVISIONS:
BOUNDARY SURVEY 03-19-2021

FOR THE LICENSED BUSINESS #7213 BY:

WILLIAM H. ABEL JR., PSM # 6165
SIGNATURE DATE: 03-25-2021

JOB NO. 2021-038	PARCEL # 6308-03-00-0240	CONCEPT PLAN FOR EASEMENT VACATION
DATE: 3-18-2021	CALCULATED BY: WHA	
SCALE: 1" = 10 FEET	DRAWN BY: KKB	
FIELD BY: SEAN/BRIAN	CHECKED BY: WHA	ADDRESS = 24 TULA DRIVE

CITY COUNCIL AGENDA ITEM

COUNCIL MEETING DATE 9/20/2022

SUBJECT: (C10) FY 2022 Utility Billing and Accounts Receivable Accounting Adjustment

DEPARTMENT: Finance

GOAL: 5 - Fiscal Sustainability

RECOMMENDED MOTION: Move to approve the Write-off of Uncollectible Accounts Receivable Debts and authorize the Finance Director or their designee to adjust accounts with an effective date of September 30, 2022.

SUMMARY: Throughout each fiscal year, the City accumulates various types of uncollectible revenue as a result of accounts being terminated, individuals filing for bankruptcy, businesses becoming inactive, or balances being outstanding over 180 days. These amounts are subject to write-off at the end of each fiscal year.

This process is an accounting procedure following the Generally Accepted Accounting Principles (GAAP), which lays the framework of accounting practices in the U.S. In applying GAAP accounting principles, the act of writing off outstanding account balances is a necessary accounting function that leads to an accounting adjustment on the City's Financial Statements to accurately show the outstanding balance and the expectation of that timely collection is unlikely. If a customer's account has been written off as uncollectible on the City Financial Statements, this does not erase or forgive that debt. The City can and does collect some portion of the amount owed by those customers by several methods. If it is an owner-occupied location, liens are filed with the Clerk of Court. These liens are typically satisfied when the property is conveyed. For tenant accounts, when the customer requests new utility services, we are able to collect the prior balance before establishing a new service.

The City provides utility services to approximately 29,000 customers and the monthly billing is settled in arrears (after usage has occurred). Since services are provided before receiving payment, inevitably, the City has customers that do not pay for the services provided. When this occurs, staff reaches out to the customer to try to collect the outstanding payment, including follow-up notices and phone calls to remind them of the outstanding balance and encourage payment. However, the longer the customer account goes without payment, the less likely that any payment will be received. Since the conversion to WorkDay, Staff has not submitted any request for a write-off to Council. The amount requested for adjustment is $84,962.49. This includes:

- 461 accounts (456 tenants & 5 owners)
- Tenant accounts of $84,454.01
- Owner accounts of $472.48
- The average delinquency is $184.30.
- Seventeen over $1,000
- It represents less than 0.0019% of our annual billings for utility services.
- The last request for write-offs was January 21, 2020 for accounts from 2018.

Additionally, the City provides various services to individuals within Port Orange, from fire inspection services, special events, hazardous use permits, business tax receipts (BTRs), and legal advertisement fees for ads. The amount requested for adjustment for Miscellaneous Receivables is $3,455.07.

The total adjustments of $88,417.56 can be found in Exhibit A.

PRESENTER: John McKinney

ATTACHMENTS:

1.	Write-Off - to Council FY22 - September 2022 Meeting	Write-Off - to Council FY22 - September 2022 Meeting.pdf

Marissa Lagger	Created/Initiated - 8/12/2022
John McKinney	Approved - 9/7/2022
Matthew Jones	Approved - 9/15/2022
Wayne Clark	Approved - 9/15/2022
Robin Fenwick	Final Approval - 9/15/2022

Customer Service Utilities

Account Number		Service Address	Date Finaled	Balance	Customer Type	Notes
29637	21419	980 CANALVIEW N7	9/29/1994	58.18	RT	
16063	37550	5396 CORDGRASS BEND	3/5/2014	41.85	OW	Bank owned, no lien this property has been sold twice since this balance
146131	14963	975 DEER SPRINGS	9/18/2015	5.92	OW	Bank Owned, no lien, new owner since 2015
148871	30825	1784 ARASH	5/18/2017	70.88	RT	
114127	19982	357 KUMQUAT	9/1/2017	44.58	RT	
135163	7137	1239 VAGABOND	5/15/2017	38.75	RT	
18027	18975	151 PIEDMONT	4/3/2017	115.57	RT	
174543	21375	980 CANALVIEW F3	10/2/2017	43.52	RT	
161301	19855	315 JEFFERSON	7/18/2018	10.62	RT	
180669	19733	292 BERN	9/11/2018	50.67	RT	
175763	14448	4066 RIDGEWOOD	9/7/2018	82.85	RT	
127739	37402	5325 CORDGRASS BEND	9/24/2018	94.07	RT	
179559	36359	5338 PLANTATION HOME	9/3/2018	94.52	RT	
121885	3787	229 PEPPERMINT	9/11/2018	31.91	RT	
180479	12826	146 SWEETGUM	9/11/2018	157.63	RT	
173839	29194	3528 FOREST BRANCH D	9/17/2018	144.71	RT	
180159	94	3543 FOREST BRANCH D	9/10/2018	105.25	RT	
167027	24057	3780 CLYDE MORRIS 408	6/17/2018	13.74	RT	
182089	20201	416 LAFAYETTE C	12/19/2018	28.60	RT	
173329	25237	5104 RIDGEWOOD	11/21/2018	100.55	RT	
147323	25203	5082 ORANGE A	11/27/2018	15.73	RT	
164283	19400	220 ORCHARD C	10/16/2018	41.55	RT	
176299	5611	5271 TAYLOR	11/8/2018	11.66	RT	
179695	20389	513 COMMONWEALTH	11/6/2018	16.25	RT	
181869	25204	5082 ORANGE B	12/3/2018	102.71	RT	
178997	17777	30 E BAYSHORE	10/16/2018	62.45	RT	
179129	23049	2825 GLADYS	12/17/2018	34.40	RT	
177427	25178	5043 PALMETTO (UP	10/16/2018	119.37	RT	
178365	14500	5606 RIDGEWOOD	12/18/2018	34.13	RT	
178241	8306	1005 BELLEFLOWER	11/19/2018	70.47	RT	
146551	7537	963 E BRAMBLE BUSH	11/1/2018	74.55	RT	
123549	25536	5424 NEWMAN	10/2/2018	67.36	RT	
124961	25150	4951 SPRUCE CREEK	10/25/2018	65.24	RT	
174039	14741	418 PALM CASTLE	11/8/2018	4,193.51	RT	
123027	26221	5836 WESTPORT	10/9/2018	58.55	RT	
174917	15128	4606 BARNACLE	11/19/2018	54.59	RT	
163225	15483	613 NEWTON	12/3/2018	149.39	RT	
181135	14390	731 GLADES C	12/7/2018	306.80	RT	
162819	1260	828 MCDONALD	10/2/2018	281.20	RT	
103377	19568	246 KEITH	10/1/2018	20.42	RT	
167433	13050	95 SPRINGWOOD	11/8/2018	23.58	RT	
178885	12977	22 SPRINGWOOD	10/10/2018	10.66	RT	
179657	12990	35 SPRINGWOOD	10/11/2018	84.65	RT	
166709	27241	3743 LONG GROVE	11/2/2018	40.52	RT	
179637	23933	3780 CLYDE MORRIS 108	10/19/2018	246.55	RT	
181281	1359	123 ALOHA	12/11/2018	61.56	RT	
121579	784	320 MONROE	9/17/2019	56.41	RT	
175717	25341	5208 ROGERS	6/27/2019	126.57	RT	
176845	6362	5435 ROGERS	2/12/2019	81.10	RT	
179431	18987	153 CROWELL	6/4/2019	50.03	RT	
181105	19398	220 ORCHARD A	7/24/2019	188.23	RT	
182607	25214	5090 ISABELLE B	1/15/2019	52.70	RT	
183787	5778	5204 PINELAND	4/16/2019	61.71	RT	
184957	6362	5435 ROGERS	9/17/2019	103.00	RT	
111363	18876	136 REYNOLDS	3/19/2019	59.48	RT	
177419	14454	5251 NOVA	4/16/2019	154.34	RT	
168589	20202	416 N WILLOW	9/24/2019	142.23	RT	
156281	18789	128 MELROSE	2/12/2019	77.78	RT	
158071	20899	805 LOUISVILLE 9	9/25/2019	55.55	RT	
175173	32379	5114 RIDGEWOOD	1/15/2019	47.10	RT	
181535	6969	5465 LANDIS	7/9/2019	130.31	RT	
173939	9314	1629 WOODMAR	6/28/2019	63.12	RT	
165873	30307	1633 ARMIN	1/22/2019	82.80	RT	
175443	37812	5521 S WILLIAMSON 405	3/3/2019	71.37	RT	Bankruptcy 2017
175663	38089	5543 S WILLIAMSON 905	2/19/2019	176.23	RT	
182517	37402	5325 CORDGRASS BEND	9/20/2019	283.42	RT	
184747	37812	5521 S WILLIAMSON 405	6/3/2019	877.30	RT	

181177	8625	920 CHICKADEE	2/27/2019	108.68	RT	
66547	25479	5405 WILSON	9/11/2019	166.81	RT	
57307	17993	56 LAWRENCE	9/26/2019	69.35	RT	
71689	19249	202 LOQUAT	6/12/2019	146.99	RT	
83763	19096	173 LOQUAT	9/9/2019	47.99	RT	
93991	19241	201 LOQUAT	9/12/2019	55.12	RT	
95531	14647	288 VAGABOND	9/12/2019	161.92	RT	
171023	17529	6 PALM CASTLE	2/28/2019	1,156.28	RT	
172653	18509	112 ORCHID	4/11/2019	112.74	RT	
174479	17834	36 TROPIC	8/21/2019	220.14	RT	
184335	18109	74 N GREENWAY	6/12/2019	136.84	RT	
70787	9619	651 TUMBLEBROOK	9/26/2019	36.92	RT	
163103	8212	994 WENDAM	7/2/2019	94.69	RT	
171971	8268	993 SANDLE WOOD	8/1/2019	71.31	RT	
169233	7059	6532 PATHELEN	8/8/2019	129.98	RT	
177051	11146	458 OXFORD	6/6/2019	64.68	RT	
181721	11144	466 OXFORD	9/12/2019	197.52	RT	
171015	10141	210 N BRIGHTON	1/14/2019	235.97	RT	
81295	10406	504 LEGUME	1/14/2019	135.89	RT	
182537	11491	454 WOODSTOCK	9/11/2019	136.73	RT	
176577	5039	4501 NETTLE CREEK	3/15/2019	137.05	RT	
177141	5230	4562 BARNACLE	7/9/2019	121.50	RT	
185655	24367	3960 OAK TRAIL 2501	7/30/2019	96.07	RT	
10831	17609	13 NORTHWOOD	6/17/2019	96.29	RT	
105941	18195	88 PIEDMONT	8/6/2019	69.91	RT	
179543	18926	143 PIEDMONT	9/17/2019	418.73	RT	
183045	12826	146 SWEETGUM	5/17/2019	111.15	RT	
184965	13007	52 SPRINGWOOD	7/18/2019	86.59	RT	
83387	22634	1450 MADELINE 27	3/7/2019	79.19	RT	
98037	2980	1472 CRAIG	9/16/2019	47.10	RT	
157927	36796	3848 CALLIOPE	9/12/2019	80.43	RT	
178779	39608	3823 ESPLANADE	7/17/2019	81.86	RT	
164149	23	3554 FOREST BRANCH D	1/10/2019	437.31	RT	
171541	35	3548 FOREST BRANCH D	9/16/2019	33.01	RT	
177257	29	3552 FOREST BRANCH D	6/13/2019	124.89	RT	
179457	14	3560 FOREST BRANCH B	9/12/2019	177.35	RT	
89157	22406	1361 ARBOL GRANDE	4/3/2019	67.32	RT	
102353	22205	1308 CALLE BONITA	4/9/2019	80.07	RT	
105331	21904	1208 LA PALOMA	4/9/2019	203.66	RT	
156673	22261	1320 FLOR DEL SOL	3/6/2019	367.28	RT	
178371	23955	3780 CLYDE MORRIS 1306	9/23/2019	18.38	RT	
181935	24060	3780 CLYDE MORRIS 503	9/12/2019	189.94	RT	
169971	36859	3830 SUNSET COVE	3/8/2019	343.06	RT	
174289	34497	1639 PROMENADE	1/10/2019	13.26	RT	
182033	1355	126 ALOHA	7/11/2019	116.02	RT	
42675	14225	4040 RIDGEWOOD	12/9/2019	6.11	RT	
83187	624	3790 RIDGEWOOD	11/13/2019	670.65	RT	
167001	18038	63 ANDREWS	12/5/2019	32.77	RT	
183341	20389	513 COMMONWEALTH	10/1/2019	48.18	RT	
184807	25288	5121 PINELAND C	11/12/2019	17.99	RT	
164727	25745	5587 LANCEWOOD	12/23/2019	34.67	RT	
108599	36042	5123 ISABELLE	12/18/2019	63.67	RT	
184031	25256	5116 TAYLOR A	10/27/2019	92.12	RT	
184691	20888	805 LOUISVILLE 10	10/27/2019	79.35	RT	
185013	6207	1126 MARGATE	12/19/2019	126.37	RT	
153099	14841	5874 WOODPOINT	12/4/2019	90.46	RT	
184491	9082	4 BLACK JACK	10/7/2019	101.51	RT	
131433	31555	1832 AFSHIN	12/4/2019	120.42	RT	
179939	16144	5647 JAMES	11/14/2019	43.25	RT	
156363	6784	17 LAWRENCE	10/1/2019	157.89	RT	
174781	6887	502 LESLIE	12/2/2019	14.96	RT	
183771	6915	402 LAURIE	10/10/2019	83.10	RT	
116151	20112	403 POINSIANNA	11/11/2019	120.68	RT	
170743	6583	1128 BAYVIEW	10/3/2019	9.28	RT	
149189	10144	204 N BRIGHTON	12/9/2019	96.84	RT	
145355	4995	4488 HIDDEN VILLAGE	10/8/2019	48.46	RT	
57661	24355	3960 OAK TRAIL 2001	12/9/2019	12.96	RT	
94991	13240	3450 COUNTRY MANOR	12/2/2019	15.71	OW	Seller left balance in 2019
123085	13042	87 SPRINGWOOD	10/1/2019	25.43	RT	
186801	13053	98 SPRINGWOOD	12/12/2019	57.96	RT	
185471	4305	1119 OAK FOREST	11/1/2019	213.19	RT	

173557	30540	1279 HARMS	12/4/2019	12.70	OW	Estate left balance when sold, paid estoppel final bill more than estimated
105027	26800	1161 AVIENDA DEL TORO	10/20/2019	81.58	RT	
184069	23953	3780 CLYDE MORRIS 1304	10/25/2019	19.14	RT	
186661	23538	3333 RIDGEWOOD B7	2/7/2020	195.25	RT	
106469	33405	529 ORANGE	5/29/2020	23.79	RT	
163217	20379	510 ORANGE	7/31/2020	63.20	RT	
180373	13925	534 LAFAYETTE	1/25/2020	79.89	RT	
182831	33404	531 ORANGE	7/25/2020	329.25	RT	
184353	719	603 ORANGE	1/14/2020	90.60	RT	
186041	654	310 WELLMAN	1/13/2020	6.41	RT	
189479	19805	307 GRANT C	9/22/2020	199.88	RT	
317	17470	2 TANGLEWOOD	8/27/2020	305.65	RT	
101227	16992	183 TANGLEWOOD	5/27/2020	127.47	RT	
184141	25565	5436 PINELAND	9/1/2020	52.45	RT	
156721	5757	5251 ORANGE	8/27/2020	274.31	RT	
167957	6058	5005 SAIL	7/25/2020	115.47	RT	
171827	5745	5267 ORANGE	1/25/2020	161.77	RT	
184161	25249	5112 TAYLOR B	1/14/2020	19.62	RT	
186861	40815	5134 TAYLOR B	4/30/2020	144.49	RT	
187795	40793	5130 TAYLOR	6/23/2020	52.21	RT	
189189	5842	5237 FREDERICK	7/7/2020	381.11	RT	
158969	25403	5263 BARHYDT	3/25/2020	80.69	RT	
181709	5474	405 TURTON	8/31/2020	278.48	RT	
183323	25369	5230 CHRISTIANCY	2/3/2020	5.48	RT	
184499	13805	160 FARMBROOK	6/17/2020	260.99	RT	
4891	18346	104 REYNOLDS	5/25/2020	392.42	RT	
114263	18642	119 REYNOLDS	5/6/2020	105.76	RT	
50419	14167	5649 PINELAND	4/30/2020	325.57	RT	
175365	26337	5934 RIDGEWOOD	1/16/2020	9.74	RT	
182219	26364	5967 RIVERSIDE	8/25/2020	576.78	RT	
13179	25620	5473 W BAYSHORE	1/13/2020	173.67	RT	
172981	30425	5585 S LANCEWOOD	1/14/2020	47.56	RT	
180673	19673	275 POINCIANA	5/18/2020	44.73	RT	
189507	30320	5458 NOVA	7/25/2020	26.43	RT	
178637	24115	3801 EMILIA	4/30/2020	15.30	RT	
183415	24592	4032 ORIOLE	6/4/2020	7.66	RT	
134417	6298	5417 PINELAND	5/25/2020	95.59	RT	
154699	5444	5408 BARHYDT	7/7/2020	186.69	RT	
165321	39656	5999 S RIDGEWOOD	6/5/2020	45.50	RT	
169425	20372	509 COMMONWEALTH	1/25/2020	199.54	RT	
171203	37866	4215 RIDGEWOOD 102	9/17/2020	143.89	RT	
171203	37867	4215 RIDGEWOOD 103	9/17/2020	42.05	RT	
173991	20402	519 MONROE	6/19/2020	138.11	RT	
182149	26074	5680 W PALM	6/5/2020	287.32	RT	
183505	30455	5840 RIDGEWOOD	8/10/2020	1,268.39	RT	
184989	25455	5356 CHRISTIANCY	5/4/2020	23.53	RT	
185221	14500	5606 RIDGEWOOD	1/14/2020	27.99	RT	
187279	13962	409 GRANT	8/7/2020	399.65	RT	
187977	5449	5415 LANDIS	2/12/2020	57.64	RT	
178229	31015	6015 SPRUCE POINT	9/14/2020	68.43	RT	
185229	8929	51 CYPRESS POND	4/9/2020	33.49	RT	
186287	22690	1608 WOODACRES	6/24/2020	193.73	RT	
117355	36499	1711 GOOSECROSS	1/8/2020	245.38	RT	
183485	36517	6817 VINTAGE	1/23/2020	9.52	RT	
183643	30716	6496 JUSTIN	5/1/2020	242.15	RT	
24417	31266	1889 BIG CRANE	1/7/2020	64.13	RT	
117207	34001	5497 RED WING	7/30/2020	95.14	RT	
186935	35029	5406 FREDERICK LAKE	1/9/2020	52.56	RT	
141231	37811	5521 S WILLIAMSON 402	6/24/2020	55.53	RT	Bankruptcy 2020
146581	40544	5435 ESTERO	8/10/2020	148.09	RT	
173915	8656	841 CHICKADEE	2/28/2020	99.74	RT	
178305	7759	900 N LAKEWOOD	9/1/2020	17.09	RT	
187503	7755	913 N LAKEWOOD	7/11/2020	248.93	RT	
105909	17750	26 ROYAL PALM	6/9/2020	155.97	RT	
171599	17218	125 ROYAL PALM	2/12/2020	140.45	RT	
80421	7330	940 TALL PINE	9/12/2020	48.02	RT	
168643	20644	710 TARRY TOWN	6/1/2020	150.83	RT	
87251	17152	5641 WILSON	7/11/2020	338.06	RT	
145873	25141	4891 SPRUCE CREEK	8/11/2020	111.58	RT	
173367	16733	823 KOKOMO	1/29/2020	29.48	RT	
181179	20442	554 COMMONWEALTH	4/30/2020	12.72	RT	

187567	28151	4678 SPRUCE CREEK	8/27/2020	110.28	RT
179621	17770	29 ELDA	8/10/2020	257.73	RT
181573	6923	417 LAURIE	2/14/2020	12.35	RT
183535	6913	406 LAURIE	1/24/2020	63.25	RT
184033	6901	430 LAURIE	6/12/2020	623.90	RT
188349	6820	54 ELDA	7/14/2020	401.67	RT
60015	19922	333 BANYAN	7/15/2020	483.38	RT
138897	19650	268 PALM CASTLE	7/13/2020	285.35	RT
145325	16596	115 ORCHID	7/13/2020	651.29	RT
149617	19469	230 MANGO	1/6/2020	84.53	RT
150331	16231	129 COCONUT	7/13/2020	101.83	RT
173273	17364	66 N GREENWAY	6/23/2020	266.51	RT
176917	19747	296 VAGABOND	8/13/2020	76.25	RT
177957	18426	108 ORCHID	7/13/2020	124.89	RT
180525	18041	63 N GREENWAY	2/7/2020	186.14	RT
137933	9620	653 TUMBLEBROOK	2/3/2020	126.39	RT
156419	10940	5924 PARK RIDGE	3/2/2020	86.99	RT
174643	9726	774 TUMBLEBROOK	4/13/2020	293.82	RT
188223	14360	5784 TAYLOR BRANCH	7/11/2020	962.74	RT
82603	8248	988 ASTON	6/10/2020	16.94	RT
182937	6641	1132 MILLBROOK	3/25/2020	9.25	RT
186585	7081	1260 WINDSOR	9/9/2020	201.95	RT
184515	20474	582 TAYLOR 3	3/10/2020	471.43	RT
186865	10490	608 DEVON	1/27/2020	52.61	RT
172993	4730	4201 NEW HAVEN	5/22/2020	49.35	RT
187397	4936	975 STONYBROOK	6/30/2020	243.61	RT
187953	4821	1018 STONYBROOK	3/17/2020	26.96	RT
156451	24345	3960 OAK TRAIL 1603	7/11/2020	151.59	RT
168715	8032	3960 WILLOW TRAIL 1705	1/29/2020	15.69	RT
175287	24398	3960 OAK TRAIL 3302	5/1/2020	22.02	RT
179743	24382	3960 OAK TRAIL 2905	8/26/2020	12.77	RT
180015	5162	4589 ALDER	1/11/2020	306.41	RT
185623	5039	4501 NETTLE CREEK	9/2/2020	30.99	RT
186447	24380	3960 OAK TRAIL 2903	9/9/2020	126.69	RT
187173	24430	3960 WILLOW TRAIL D17	6/11/2020	480.32	RT
188077	24441	3960 WILLOW TRAIL I37	7/28/2020	29.33	RT
188167	24423	3960 WILLOW TRAIL C11	9/15/2020	187.27	RT
167909	21749	1127 FOURTH	8/11/2020	47.31	RT
177167	995	801 CHARLES	8/18/2020	303.33	RT
178983	31652	2963 WILD PECAN	6/4/2020	120.77	RT
184607	13187	3488 COUNTRY WALK	5/1/2020	31.24	RT
174849	21634	1104 SOUTHAMPTON 2	9/18/2020	86.66	RT
67533	19413	222 CHRIS	7/20/2020	203.24	RT
179401	18763	126 PIEDMONT	7/20/2020	68.49	RT
185875	18095	71 WALTON	2/19/2020	10.44	RT
177495	3513	130 STONE GATE	7/18/2020	410.62	RT
177609	3371	1109 BUTTERMILK	7/18/2020	311.78	RT
188643	3552	170 IRON GATE	6/26/2020	295.52	RT
93043	12403	131 MOONSTONE	6/8/2020	83.32	RT
154045	12978	23 SPRINGWOOD	5/28/2020	25.81	RT
174515	12994	39 SPRINGWOOD	4/6/2020	88.47	RT
177303	23792	3651 FRANCIS	9/30/2020	14.38	RT
178469	12972	17 SPRINGWOOD	1/3/2020	51.25	RT
179287	12507	866 NIXON	3/3/2020	62.00	RT
181149	13001	46 SPRINGWOOD	2/13/2020	270.89	RT
187587	23800	3656 JACKSON B6	8/5/2020	17.43	RT
81039	511	820 ORANGE	9/23/2020	65.34	RT
162781	21007	835 FIFTH	5/22/2020	67.09	RT
167255	1166	522 POWERS	9/9/2020	511.09	RT
184175	21420	980 CANALVIEW N8	8/6/2020	25.86	RT
185391	12645	3740 PAIGE	4/20/2020	7.70	RT
96023	1909	1104 VIKING	7/7/2020	15.69	RT
184151	14982	1150 VIKING	1/14/2020	302.06	RT
129373	3204	1516 RUSTY	8/28/2020	268.57	RT
173849	40820	1603 PHAM	2/17/2020	78.42	RT
175569	37972	3808 CALLIOPE	7/14/2020	41.50	RT
178793	3178	4721 CHARDONNAY	1/16/2020	5.44	RT
184943	3159	1508 LEONE	3/10/2020	87.97	RT
185003	40930	1617 PHAM	7/18/2020	145.89	RT
185015	40837	1604 PHAM	1/31/2020	98.17	RT
187733	3881	1064 WEXFORD	6/1/2020	57.33	RT
76257	14567	3851 NOVA	6/3/2020	1,185.01	RT

78415	15772	3859 NOVA	6/24/2020	145.93	RT
170031	14311	3841 NOVA	6/19/2020	471.59	RT
185249	26905	3727 SUNRISE OAKS	8/21/2020	245.99	RT
185447	62	3561 FOREST BRANCH D	1/8/2020	21.81	RT
149423	21508	1002 DEER SPRINGS	3/24/2020	5.18	RT
102989	22439	1371 CALLE DEL SOL	8/18/2020	108.45	RT
156549	23943	3780 CLYDE MORRIS 1202	3/27/2020	8.72	RT
170473	23978	3780 CLYDE MORRIS 1604	6/16/2020	22.01	RT
179459	24078	3780 CLYDE MORRIS 801	3/24/2020	75.23	RT
181323	16646	3814 LONG GROVE	1/3/2020	30.22	RT
181695	23930	3780 CLYDE MORRIS 105	6/1/2020	143.64	RT
182561	24068	3780 CLYDE MORRIS 607	2/17/2020	63.45	RT
184739	23948	3780 CLYDE MORRIS 1207	5/21/2020	35.95	RT
184937	23918	3780 CLYDE MORRIS 1001	6/1/2020	131.22	RT
185285	24046	3780 CLYDE MORRIS 305	5/29/2020	10.75	RT
186275	23952	3780 CLYDE MORRIS 1303	4/15/2020	117.38	RT
186691	24065	3780 CLYDE MORRIS 604	4/22/2020	30.02	RT
179237	1361	119 ALOHA	2/17/2020	159.11	RT
102835	20124	405 CHURCH	11/2/2020	62.61	RT
126919	658	605 LAFAYETTE	12/26/2020	50.51	RT
182795	18947	146 WALL	12/28/2020	177.65	RT
179755	5698	5168 TAYLOR	10/9/2020	846.92	RT
189109	5778	5204 PINELAND	10/30/2020	245.20	RT
188307	5510	5404 CHRISTIANCY	11/10/2020	99.68	RT
169559	26060	5670 W PALM	12/7/2020	209.32	RT
187759	18568	115 OGDEN	10/27/2020	147.63	RT
186903	583	207 WILLIS	11/10/2020	59.49	RT
188861	14574	4082 RIDGEWOOD	11/24/2020	11.31	RT
189821	20897	805 LOUISVILLE 7	10/27/2020	245.68	RT
190229	25252	5113 PINELAND B	10/27/2020	177.17	RT
190809	22690	1608 WOODACRES	10/23/2020	150.35	RT
188029	28418	6447 LONGLAKE	10/30/2020	691.33	RT
174855	31764	6751 FERRI	12/5/2020	286.37	RT
143053	37815	5521 S WILLIAMSON 415	12/4/2020	119.34	RT
64051	25945	5635 JAMES	12/12/2020	213.41	RT
173309	16405	5438 DURANT	12/10/2020	49.32	RT
174369	17150	5633 WILSON	11/10/2020	246.83	RT
190535	20442	554 COMMONWEALTH	10/14/2020	180.24	RT
166089	35108	980 GRASSY RIDGE	11/2/2020	31.42	RT
174671	17763	28 ELDA	11/9/2020	70.59	RT
189123	20338	495 LESLIE	12/28/2020	134.32	RT
7593	18943	146 ORCHID	11/13/2020	104.45	RT
107853	18490	111 ORCHID	10/15/2020	847.42	RT
191339	14169	40 TROPIC	12/14/2020	92.39	RT
125565	17761	27 TIMBER	11/9/2020	118.07	RT
116593	6623	1157 MILLBROOK	10/8/2020	72.81	RT
144525	6583	1128 BAYVIEW	11/11/2020	480.07	RT
187417	21926	1212 SPARTON	10/16/2020	332.30	RT
95681	11116	5820 MYSTIC	12/12/2020	384.05	RT
166781	17256	5802 SPRUCE CREEK	12/12/2020	65.56	RT
178313	10016	129 STRATFORD	10/13/2020	776.52	RT
185871	10112	206 DEVON	10/30/2020	241.18	RT
180045	4768	813 LONG MEADOW	10/1/2020	585.64	RT
189339	24347	3960 OAK TRAIL 1802	10/13/2020	347.53	RT
190665	16248	3960 OAK TRAIL 2906	10/13/2020	230.37	RT
187233	16637	1150 WHITEHALL	10/26/2020	34.80	RT
7595	18510	112 PIEDMONT	11/19/2020	191.61	RT
166855	17879	42 WOODVILLE	10/5/2020	7.93	RT
175043	2282	55 RAVENWOOD	10/15/2020	74.18	RT
166571	13016	61 SPRINGWOOD	11/18/2020	649.10	RT
189013	12406	134 MOONSTONE	12/8/2020	31.94	RT
189161	13053	98 SPRINGWOOD	12/29/2020	206.09	RT
190261	12402	130 MOONSTONE	10/15/2020	57.68	RT
183127	21341	980 CANALVIEW B1	12/14/2020	21.75	RT
188319	21372	980 CANALVIEW E8	12/3/2020	84.95	RT
177447	25066	4663 SOUTH MOON	11/2/2020	872.95	RT
187019	21521	1203 DEER SPRINGS	10/9/2020	90.17	RT
151519	22022	1232 LAS BRISAS	11/4/2020	87.18	RT
184521	24003	3780 CLYDE MORRIS 2004	10/26/2020	125.58	RT
184921	23988	3780 CLYDE MORRIS 1706	12/30/2020	80.24	RT
186517	24062	3780 CLYDE MORRIS 601	10/22/2020	250.04	RT
187283	23992	3780 CLYDE MORRIS 1901	10/9/2020	408.93	RT

187365	24077	3780 CLYDE MORRIS 708	10/2/2020	339.66	RT	
189653	24018	3780 CLYDE MORRIS 2102	11/17/2020	71.32	RT	
190671	23920	3780 CLYDE MORRIS 1003	10/16/2020	79.01	RT	
142319	553	212 HERBERT	2/1/2021	215.63	RT	
148599	808	301 LAFAYETTE	8/31/2021	46.78	RT	
182821	20187	414 LAFAYETTE B	4/1/2021	22.56	RT	
183647	20188	414 LAFAYETTE C	6/10/2021	47.22	RT	
186721	16459	528 LAFAYETTE	6/10/2021	320.47	RT	
188823	19018	157 WALL	5/27/2021	116.50	RT	
192477	25237	5104 RIDGEWOOD	7/20/2021	76.15	RT	
136283	25394	5256 TAYLOR	3/1/2021	28.06	RT	
159635	5612	5290 ISABELLE	1/25/2021	61.42	RT	
181777	19366	216 ORCHARD B	1/26/2021	91.65	RT	
183497	5772	5227 ORANGE	4/20/2021	105.57	RT	
185219	25233	5103 TAYLOR	6/3/2021	78.33	RT	
186355	5691	5169 PINELAND	5/18/2021	280.23	RT	
194889	25217	5090 ORANGE B	9/10/2021	68.72	RT	
189769	5531	5353 CHRISTIANCY	6/11/2021	30.42	RT	
174633	6400	5463 TAYLOR	3/2/2021	189.91	RT	
188787	25955	5636 PINELAND	9/23/2021	119.34	RT	
188433	35715	5397 NOVA	7/2/2021	91.03	RT	
36383	23416	3210 S ATLANTIC	7/29/2021	43.65	RT	
188299	23850	3717 S ATLANTIC	4/25/2021	3,941.91	RT	
188299	23854	3721 S ATLANTIC	4/25/2021	5,176.79	RT	
77363	20697	720 NORMANDY	6/1/2021	60.16	RT	
168659	36687	306 CHURCH	1/25/2021	1,040.01	RT	
172315	5703	5197 PINELAND	9/1/2021	55.44	RT	
188383	18789	128 MELROSE	5/18/2021	25.52	RT	
188667	25184	5053 PALMETTO	1/7/2021	854.96	RT	
189541	20890	805 LOUISVILLE 12	7/20/2021	61.84	RT	
192911	25365	5226 RIVERSIDE	1/14/2021	109.01	RT	
194279	36687	306 CHURCH	5/25/2021	1,096.85	RT	
162061	9057	4 CROOKED PINE	9/22/2021	44.76	RT	
191065	9082	4 BLACK JACK	8/3/2021	20.80	RT	
169711	28815	6144 JASMINE VINE	2/22/2021	382.17	RT	
162535	36472	6801 AMICI	3/1/2021	53.99	RT	
165023	34182	6790 CALISTOGA	9/1/2021	166.76	RT	
169007	31743	6722 FERRI	4/26/2021	46.90	RT	
183481	32614	6610 NASSER	6/29/2021	120.39	RT	
190465	34180	6788 CALISTOGA	3/3/2021	266.10	RT	
192405	30674	1685 ARASH	3/30/2021	60.75	RT	
175777	7749	929 FOREST GLEN	6/3/2021	106.22	RT	
189179	8667	854 CHICKADEE	8/5/2021	53.04	RT	
100057	17042	84 ROYAL PALM	2/24/2021	23.46	RT	
179219	17772	29 ROYAL PALM	7/15/2021	131.98	RT	
184451	7422	968 W BRAMBLE BUSH	4/22/2021	354.79	RT	
194449	7401	913 MILL ROAD	9/11/2021	62.49	RT	
127273	16471	5410 DURANT	7/13/2021	157.25	RT	
150007	25137	4877 SPRUCE CREEK	1/9/2021	20.32	RT	
154035	25544	5427 MARSHFIELD	7/13/2021	456.16	RT	
185087	6676	5669 WOOD	2/2/2021	79.01	RT	
165983	19258	203 LOQUAT	7/28/2021	245.83	RT	Bankruptcy 2021
169729	18937	145 ORCHID	7/29/2021	137.21	RT	
180209	17673	18 PALM CASTLE	3/10/2021	14.44	RT	
178381	9663	653 SWEETWOOD	9/8/2021	253.43	RT	
188881	8446	5759 DOGWOOD	9/30/2021	218.90	RT	
164565	7069	1216 WINDSOR	5/7/2021	143.43	RT	
188919	7073	1228 WINDSOR	8/17/2021	32.79	RT	
194961	21881	1202 SPARTON	9/11/2021	154.10	RT	
172123	10102	225 BRITTANY	3/25/2021	77.60	RT	
193231	20416	524 TAYLOR	6/11/2021	83.91	RT	
167165	10670	364 HEARTHSTONE	6/29/2021	33.62	RT	
184441	20911	808 WHIPORWILL	5/3/2021	36.95	RT	
190641	10387	716 MERRIMAC	5/17/2021	18.69	RT	
190813	13710	6180 OLYMPIC	4/13/2021	275.21	RT	
163647	24411	3960 OAK TRAIL 3505	6/21/2021	70.22	RT	
189467	24403	3960 OAK TRAIL 3307	2/17/2021	9.14	RT	
189987	24381	3960 OAK TRAIL 2904	1/26/2021	259.58	RT	
180259	11797	6047 GALIEN	2/3/2021	80.38	RT	
167369	926	836 FIRST	8/19/2021	165.36	RT	

193413	19833	311 CHARLES C	9/21/2021	398.21	RT	
148423	15103	3938 OAK CREST	9/10/2021	42.87	RT	
191325	12806	787 SUGAR CANE	1/16/2021	45.91	RT	
188991	21610	1102 MONTICELLO 2	2/2/2021	76.66	RT	
99833	18640	119 PIEDMONT	6/21/2021	137.45	RT	
174245	4009	1030 TOMPKINS	4/9/2021	123.45	RT	
187541	4253	4575 HOYT	6/10/2021	147.23	RT	
192753	3758	199 GIBSON	9/10/2021	57.44	RT	
126433	12994	39 SPRINGWOOD	1/12/2021	248.83	RT	
151595	12425	177 MOONSTONE	1/4/2021	23.04	RT	
185557	13030	75 SPRINGWOOD	3/1/2021	168.02	RT	
191799	13057	102 SPRINGWOOD	8/25/2021	415.41	RT	
140969	689	404 NANCY	4/14/2021	70.50	RT	
175155	1159	654 HERBERT	9/9/2021	451.37	RT	
190847	4183	1049 OAK FOREST	5/4/2021	9.94	RT	
190393	30541	1277 HARMS	6/29/2021	19.96	RT	
167635	2862	1314 ALCORN	7/15/2021	119.69	RT	
174709	22176	1300 W DEXTER	5/3/2021	80.87	RT	
185717	2711	1244 THOMAS	5/4/2021	36.38	RT	
190289	2543	1237 MELLISA	7/9/2021	316.78	RT	
191445	2689	1235 THOMASINA	7/1/2021	173.37	RT	
91497	24174	3850 NOVA	9/24/2021	190.27	RT	
152285	4454	3811 NOVA	5/28/2021	1,021.25	RT	
93091	35	3548 FOREST BRANCH D	6/19/2021	198.30	RT	
99295	32240	1425 RICHEL	8/19/2021	79.41	RT	
149765	33	3548 FOREST BRANCH B	1/25/2021	349.22	RT	
182443	54	3556 FOREST BRANCH A	2/15/2021	252.60	RT	
184373	32	3548 FOREST BRANCH A	9/1/2021	74.20	RT	
185859	31	3552 FOREST BRANCH F	6/11/2021	70.05	RT	
174053	21527	1303 DEER SPRINGS	2/2/2021	16.04	RT	
34885	22791	2201 LA ROSA	1/16/2021	1,114.56	RT	
114775	24070	3780 CLYDE MORRIS 701	4/5/2021	158.54	RT	
182617	23933	3780 CLYDE MORRIS 108	1/16/2021	77.62	RT	
186109	24090	3780 CLYDE MORRIS 905	7/30/2021	141.91	RT	
186535	24087	3780 CLYDE MORRIS 902	3/4/2021	31.27	RT	
189579	23999	3780 CLYDE MORRIS 1908	4/14/2021	92.45	RT	
169267	18458	110 BAREFOOT	2/18/2021	124.44	RT	
			TOTAL ADJUSTMENT AMOUNT	**84,962.49**		

Summary of Adjustment By Year	Amount
Fiscal Year 1994 Total:	58.18
Fiscal Year 2013 Total:	41.85
Fiscal Year 2015 Total:	5.92
Fiscal Year 2017 Total:	269.78
Fiscal Year 2018 Total:	829.49
Fiscal Year 2019 Total:	16,401.75
Fiscal Year 2020 Total:	27,875.59
Fiscal Year 2021 Total:	39,479.93
TOTAL ADJUSTMENT AMOUNT	**84,962.49**

Community Development Business Tax Receipts

Year	License Number	Business Name Address	Sum of Charges	Sum of Payments	Total Due	Business Status
14	14 00023560	REAL ESTATE SOLUTIONS REALTY I	$ 20.00	$ -	$ 20.00	Inactive
14	14 00002896	THE GROVES APARTMENTS	$ 440.00	$ -	$ 440.00	Inactive
14	14 00020554	PC FLOORING, LLC	$ 62.50	$ -	$ 62.50	Inactive
14	14 00023565	RICKYBOBBYUSA,	$ 50.00	$ -	$ 50.00	Inactive
14	14 00010430	TESTING-CATHI	$ 3.00	$ -	$ 3.00	Inactive
15	15 00023916	ONE HOUR AIR CONDITIONING & HE	$ 3.00	$ -	$ 3.00	Inactive
15	15 00020554	PC FLOORING, LLC	$ 62.50	$ -	$ 62.50	Inactive
15	15 00023565	RICKYBOBBYUSA,	$ 50.00	$ -	$ 50.00	Inactive
15	15 00024024	M & P FRAMING & TRIM, LLC	$ 50.00	$ -	$ 50.00	Inactive
16	16 00014116	TANNER ENTERPRISES	$ 30.00	$ 3.00	$ 27.00	Inactive
16	16 00021657	BROOKE TAYLOR 23, LLC	$ 50.00	$ 5.00	$ 45.00	Inactive
16	16 00024586	WAL-MART STORES EAST, LP	$ 25.00	$ -	$ 25.00	Inactive
16	16 00024598	MICHELLE TESTING 2016	$ 0.01	$ -	$ 0.01	Inactive
16	16 00020143	MICHAEL W YOUKON	$ 25.00	$ 5.00	$ 20.00	Inactive
16	16 00022974	MICKEY WHITES TREE SERVICE	$ 62.50	$ -	$ 62.50	Inactive
16	16 00024244	MICHAEL COLEMAN HANDYMAN SERVI	$ 20.00	$ -	$ 20.00	Inactive
17	17 00021794	MARKEL INSURANCE CO	$ 62.50	$ 50.00	$ 12.50	Inactive
17	17 00024524	CENTRAL PARK VILLA	$ 62.50	$ -	$ 62.50	Inactive
17	17 00025308	M&I GENERAL CONTRACTING LLC	$ 100.00	$ -	$ 100.00	Inactive
17	17 00020143	MICHAEL W YOUKON	$ 20.00	$ -	$ 20.00	Inactive
17	17 00023513	STEPHEN WILLIAMS (INACTIVE)	$ 50.00	$ 5.00	$ 45.00	Inactive
17	17 00024366	FIRST LIBERTY INSURANCE CORPOR	$ 62.50	$ 50.00	$ 12.50	Inactive
17	17 00024656	AMANDA GOODWIN	$ 50.00	$ -	$ 50.00	Inactive
17	17 00025239	UP CHIQUE CREEK TREASURES LLC	$ 25.00	$ -	$ 25.00	Inactive
18	18 00020888	BB&T	$ 62.50	$ 60.00	$ 2.50	Inactive
18	18 00021531	EBRU PAYTAS PERMANENT MAKEUP	$ 62.50	$ 55.00	$ 7.50	Inactive
18	18 00024209	LAUNDRY LAND CLEANERS	$ 490.00	$ 440.00	$ 50.00	Inactive
18	18 00024524	CENTRAL PARK VILLA	$ 50.00	$ -	$ 50.00	Inactive
18	18 00024132	KYLE CLARK	$ 24.00	$ -	$ 24.00	Inactive
18	18 00024904	KM OUTDOORS LLC	$ 55.00	$ -	$ 55.00	Inactive
18	18 00025128	SUITE MAIDS OF DAYTONA BEACH L	$ 20.00	$ -	$ 20.00	Inactive
18	18 00025617	PORT ORANGE PAINTING LLC	$ 3.00	$ -	$ 3.00	Inactive
18	18 00026120	JAMES MEADOWS JR LLC	$ 3.00	$ -	$ 3.00	Inactive
19	19 00020125	PORT ORANGE CITGO	$ 62.50	$ 7.50	$ 55.00	Inactive
19	19 00020725	7-ELEVEN STORE # 32675A	$ 120.00	$ 30.00	$ 90.00	Inactive
19	19 00021105	BERGANDI'S BEAUTY BOUTIQUE INC	$ 60.00	$ 53.00	$ 7.00	Inactive
19	19 00023753	FLORIDA MEDICAL HEARING CENTER	$ 33.00	$ 30.00	$ 3.00	Inactive
19	19 00024210	LAUNDRY LAND CLEANERS	$ 50.00	$ -	$ 50.00	Inactive
19	19 00024474	G AND R PSYCHIATRIC DYNAMICS L	$ 62.50	$ -	$ 62.50	Inactive
19	19 00024524	CENTRAL PARK VILLA	$ 50.00	$ -	$ 50.00	Inactive
19	19 00025703	FLAUNT ELECTRIC VEHICLES, INC.	$ 20.00	$ -	$ 20.00	Inactive
19	19 00019514	TROPICAL LAWN & SHRUB CARE LLC	$ 62.50	$ 60.00	$ 2.50	Inactive
19	19 00025401	DAVID SOUCY	$ 55.00	$ -	$ 55.00	Inactive
19	19 00025765	FRESH CLIPPINGS	$ 20.00	$ -	$ 20.00	Inactive
19	19 00025782	GLADIATORS TILE AND STONE LLC	$ 50.00	$ -	$ 50.00	Inactive
19	19 00025813	RAINBO SITTING SVC	$ 50.00	$ -	$ 50.00	Inactive
19	19 00025863	DOLAN ELECTRIC LLC	$ 50.00	$ -	$ 50.00	Inactive
19	19 00025933	MILDLY SERIOUS STITCHES	$ 50.00	$ -	$ 50.00	Inactive
19	19 00026035	ALL-OUT CLEAN LLC	$ 25.00	$ -	$ 25.00	Inactive
19	19 00026040	KRISTY JOHNSON	$ 10.00	$ -	$ 10.00	Inactive
20	20 00024446	AMERICAN IN-HOME CARE	$ 50.00	$ -	$ 50.00	Inactive
20	20 00026174	STEVES HEARING LLC	$ 30.00	$ -	$ 30.00	Inactive

20	20 00026067	A N P KEEP IT MOVING	$ 60.00	$ -	$ 60.00	Inactive
20	20 00026337	NEDROW'S PRESSURE CLEANING & P	$ 50.00	$ -	$ 50.00	Inactive
20	20 00026423	FL PRO HOME SERVICE LLC	$ 10.00	$ -	$ 10.00	Inactive
20	20 00026459	BLACKJACK SEALCOATING	$ 25.00	$ -	$ 25.00	Inactive
21	21 00017364	TUCKER ANTHONY	$ 50.00	$ -	$ 50.00	Inactive
21	21 00017370	V2M LAWN MAINTENANCE	$ 50.00	$ -	$ 50.00	Inactive
21	21 00020765	HOME-WORKS HOME IMPROVEMENT CO	$ 25.00	$ 20.00	$ 5.00	Inactive
21	21 00022990	BURGER KING #3926	$ 55.00	$ 50.00	$ 5.00	Inactive
21	21 00025824	TOP NOTCH TREE SERVICES ,LLC	$ 62.50	$ -	$ 62.50	Inactive
21	21 00026425	S&S SUNRISE PAINTING LLC	$ 62.50	$ -	$ 62.50	Inactive
21	21 00026542	GLORIA ECHAVARRIA	$ 20.00	$ -	$ 20.00	Inactive
21	21 00026741	MR. PRESSURE WASHER, LLC	$ 50.00	$ -	$ 50.00	Inactive
21	21 00026853	FLOORS AND MORE CLEANING SOLUT	$ 50.00	$ -	$ 50.00	Inactive
21	21 00026891	CF EFS LLC	$ 25.00	$ -	$ 25.00	Inactive
21	21 00026914	X-CELLENT LINE STRIPING LLC	$ 25.00	$ -	$ 25.00	Inactive
21	21 00026932	SHORETHING CLEANING LLC	$ 10.00	$ -	$ 10.00	Inactive
					$ 2,197.51	**TOTAL WRITE-OFF AMOUNT**

Miscellaneous Receivables

No.	Type	Name	Address	Customer No.	Date	Amount	Penalties & Interest	Less Payments to Date	Proposed Write-Off	Reason for Write-Off
1	Hazardous Use Permit	**Soulworks Fine Art**	5889 S Williamson Blvd. #1324 Port Orange, FL 32128	2875	2019 - 2022	$100.00	$45.82	$0.00	$145.82	2019 through 2022 HU permits have not been paid to date. Soulworks Fine Art has now been replaced with a new business, Kristi's Rhythm & Dance.
2	Legal Advertising Fees	**Danielle Camarco**	10517 Standing Stone Drive Wimauma, FL 33598	2890	03/31/16	$515.98	$595.76	$0.00	$1,111.74	Ms. Camarco had advertising fees for ads ran in January 2016 for a total of $515.98. Bankruptcy filing occurred on 07/16/18, which were discharged by the Court on 10/19/18. The City received notice of Ms. Camarco's bankruptcy discharge on 03/29/22.
									$1,257.56	**TOTAL WRITE-OFF AMOUNT**

Customer Service Utilities	**$**	**84,962.49**
Community Development Business Tax Receipts		**2,197.51**
Miscellaneous Receivables		**1,257.56**
GRAND TOTAL WRITE-OFF AMOUNT	**$**	**88,417.56**

CITY COUNCIL AGENDA ITEM

COUNCIL MEETING DATE 9/20/2022

SUBJECT: (C11) Approval of Proportionate Fair-Share Agreement for Shoppes at Summer Trees Site Plan (Case No. 22-800000001)

DEPARTMENT: Community Development

GOAL: 2 - Infrastructure

RECOMMENDED MOTION: Move to approve the Proportionate Fair-Share Agreement for the Shoppes at Summer Trees Site Plan - Case No. 22-80000001, subject to review and approval by Volusia County; authorize the City Manager to accept modifications requested by the County; and authorize the Mayor and City Clerk to execute all necessary documents.

SUMMARY: The Shoppes at Summer Trees development is proposed to be located at 5500 S. Williamson Boulevard (see location map below). The proposed Proportionate Fair-Share Agreement has been prepared in conjunction with the site plan for the development of a 20,260 square foot grocery store, a 7,770 square foot multi-tenant building, and a 3,900 square foot fast food restaurant with drive-through on +/- 5.8 acres, along with associated on-site and off-site improvements. The Transportation Impact Analysis (TIA) completed by LTG Engineering & Planning, Inc. anticipates impacts on Williamson Boulevard, Taylor Road, and the intersection of Williamson Boulevard and Taylor Road upon completion of the project. The TIA was prepared according to the City of Port Orange's adopted guidelines and was reviewed and approved by city and Volusia County staff.

Based on the TIA prepared, the developer, VeeCor Property Management, is required to make an $823,115.87 fair-share mitigation payment for the total 119 PM peak hour trips per day generated by the development. The Proportionate Fair-Share Agreement is to document the number of vested trips being used by the proposed development and to mitigate the impact of the new traffic generated from the development. The fair-share mitigation payment includes a payment to Volusia County and the City of Port Orange : 1) payment of $680,133.87 to Volusia County for impacts to Williamson Boulevard and Taylor Road. 2) payment of $142,982.00 towards the design, permitting, and construction associated with improvements to the North Summer Trees Road and Williamson Boulevard intersection, to add a second left-turn lane for eastbound North Summer Trees Road to improve traffic flow, reduce delays for turning vehicles, and improve intersection safety in lieu of payment to the City of Port Orange Summer Trees Road project for impacts on the intersection of Williamson Boulevard and Taylor Road. The Proportionate Fair-Share Agreement has been executed by the property owner and is attached for review. Due to the impact of the project involving both the City of Port Orange and Volusia County, the agreement is required to be approved by the County as well as the city. Once approved by the City, the agreement and supporting documents will be forwarded to the County for review and final approval. It is anticipated to go before the Volusia County Council in October 2022.

The subject property is currently zoned PC-A (Planned Community-Agricultural) - Workplace Zoning District, which allows for the proposed uses. The site plan for the proposed project has been reviewed at the staff level and may be approved once all Land Development Code requirements have been met and the required fair-share mitigation payments have been received.

PRESENTER: Tim Burman

ATTACHMENTS:

1.	Proportionate Fair Share Agreement w exhibits	PFSA Shoppes at Summer Trees - Aldi.pdf

Tim Burman	Created/Initiated - 8/22/2022
Tim Burman	Approved - 9/6/2022
John McKinney	Approved - 9/7/2022
Shannon Balmer	Approved - 9/8/2022
Wayne Clark	Approved - 9/9/2022
Robin Fenwick	Final Approval - 9/9/2022

SHOPPES AT SUMMER TREES
PROPORTIONATE FAIR SHARE AGREEMENT

THIS AGREEMENT is entered into by and between the following entities: **VeeCor Property Management, LLC,** a Florida limited liability company whose mailing address is 259 Bill France Blvd., Daytona Beach, FL 32114, ("Developer"); **City of Port Orange, Florida**, a Chartered Florida Municipality located in Volusia County, Florida, 1000 City Center Circle, Port Orange, Florida 32129 ("City"); and the **County of Volusia,** a political subdivision of the State of Florida ("County"), mailing address: 123 West Indiana Avenue, DeLand, FL 32720.

WHEREAS, Developer intends to develop Five and eight-tenths (±5.8) acres of land generally located on the west side of Williamson Boulevard, south of North Summer trees Road in Port Orange, Florida, otherwise identified as Parcel Identification Numbers 6318-00-00-0023 (the "Property") as shown in **Exhibit A**; and

WHEREAS, the Property has undergone site plan review by the City of Port Orange to authorize the construction of a 20,260 square foot grocery store, a 7,770 square foot multi-tenant building, and a 3,900 square foot fast food restaurant with drive-through known as Shoppe at Summer Trees ("Project"); and

WHEREAS, in connection with the site plan review, a transportation impact analysis of the existing road network in the vicinity of the Project was performed on behalf of the Developer on June 29, 2022 ("Transportation Impact Analysis") in order to determine the availability of roadway capacity to serve the Project; and

WHEREAS, the results of the Transportation Impact Analysis indicate that insufficient roadway capacity exists in the vicinity of the Property without the anticipated traffic impacts of the Project; and;

WHEREAS, Florida Statutes § 163.3180(5)(h) (2021) authorizes payment of proportionate fair-share mitigation funds as an alternative to demonstrating traffic concurrency in certain circumstances, but specifically exempts backlogged failures from the requirement for proportionate fair share payment; and

WHEREAS, through the Transportation Impact Analysis, certain traffic impacts were identified in the area of the development ("Impact Area"), and payment for such site-related improvements are set forth in this Agreement; and

WHEREAS, LTG Engineering & Planning Inc., in a written analysis, calculated a proportionate fair share for the total buildout of the Project and offsite traffic improvements based upon a maximum buildout of a 20,260 square foot grocery store, a 7,770 square foot multi-tenant building, and a 3,900 square foot fast food restaurant with drive-through; and

NOW THEREFORE, in consideration of the mutual promises and covenants contained herein, and with the intent to be legally bound and to bind their successors and assigns, the Developer and County do hereby agree as follows:

1. Recitals. The recitals set forth above are true and correct, form a material part of this Agreement, and are incorporated herein by reference.

2. Roadway Improvements. Developer shall take or shall cause to be taken the following actions to address roadway improvements identified by the City and County as a result of the impacts by the Project ("Roadway Improvements") in order to satisfy concurrency requirements consistent with Chapters 4 and 21 of the City's Land Development Code and Section 72 of the County's Land Development Code:

(a) Proportionate Fair Share. For purposes of this Agreement, the amount of $823,115.87 referred to herein as "Proportionate Fair Share" as calculated in **Exhibits B and C**, attached hereto and made a part hereof by reference. The Proportionate Fair Share shall be paid as follows: 1) $680,133.87 shall be paid to the County, as set forth in Exhibit B, and 2) except as otherwise contemplated in Subsection (b), hereinbelow, $142,982.00 shall be paid to the City, as set forth in Exhibit C, prior to the issuance of a final site plan approval letter by the City of Port Orange. Once payment is made, the Developer agrees to waive the right to request a return of the Proportionate Fair Share payment. Nothing contained herein shall be deemed to waive the requirements for site plan approval or an issuance of a concurrency certificate under the City of Port Orange's Land Development Code. If Developer does not pay the Proportionate Fair Share within one year of the date of the execution of this Agreement by all parties hereto, then the Proportionate Fair Share shall be revised based on the applicable Florida Department of Transportation published inflationary rate. The parties agree that construction of the Roadway Improvements shall be constructed as determined by the City and County, as applicable. Nothing herein is intended to alter, reduce or otherwise waive Developer's right to receive impact fee or capacity credits in connection with the Proportionate Fair Share to the extent that Developer would be entitled to receive such credits. Subsequent to payments received by the City and County, Developer shall be entitled to County thoroughfare road impact fee credits against the payment of the Proportionate Fair Share to the County. County impact fee credits issued as detailed in **Exhibit D**. For purposes of road impact fee credits against the payment of the Proportionate Fair Share to the City, Developer specifically waives Developer's right to claim any and all City road impact fee credits, except as such credits may be due pursuant to Section 11, Article II, Chapter 21 of the Land Development Code, City of Port Orange, Florida.

(b) Construction of Improvements. If applicable, the Developer may agree to construct, or to have constructed, a portion or all of the Roadway Improvements, referenced in **Exhibit C,** as full or partial payment towards the City's Proportionate Fair Share contribution, in accordance with Chapters 4 and 21 of the City's Land Development

Code. Construction of the Roadway Improvements will commence and be complete to meet concurrency requirements or mitigate transportation deficiencies within the Project area, in accordance with Chapters 4 and 21 of the City's Land Development Code, prior to the issuance of the first Certificate of Occupancy. All planning, permitting, and construction will be subject to review and approval by the City of Port Orange, County of Volusia, and, if applicable, the Florida Department of Transportation and will comply with the standards and requirements established by the appropriate governmental entities. The Developer will have no responsibility for maintenance or upkeep of the Roadway Improvements.

If the City chooses to accept the construction of all or a portion of the Roadway Improvements as full or partial payment toward the City's Proportionate Fair Share contribution, then, unless otherwise stated herein, completion of the construction of all or a portion of the Roadway Improvements will be accepted as full or partial payment for the City's Proportionate Fair Share contribution. The value of the fully constructed Roadway Improvements applied toward the City's Proportionate Fair Share contribution is based on the actual costs of the constructed Roadway Improvements. Once Roadway Improvements offered as full or partial payment toward the City's Proportionate Fair-Share are complete, the Developer shall provide actual costs of said improvements, certified, sealed, and signed by the engineer of record for the Project. If actual costs are less than the estimated costs of constructing said improvements previously provided to the City for consideration toward the City's total Proportionate Fair Share, then Developer shall pay the outstanding balance of the estimate provided in addition to the monies owed to the City's total Proportionate Fair Share. Any additional monies owed and certification of actual costs shall be provided prior to the first Certificate of Occupancy.

(c) <u>County's Application of Proportionate Share.</u> The parties intend that the County will apply the Proportionate Fair Share for the purpose of installing improvements in the Impact Area. Owner acknowledges that it has no right to direct or claim a right to direct the application of the Proportionate Fair Share to making any specific public roadway infrastructure improvements.

(d) <u>City's Application of Proportionate Share.</u> The parties intend that the City will apply the Proportionate Fair Share for the purpose of installing improvements in the Impact Area. Developer acknowledges that it has no right to direct or claim a right to direct the application of the Proportionate Fair Share to making any specific public roadway infrastructure improvements.

3. <u>Developer Acknowledgement/Waiver.</u> Developer acknowledges that the payment of the Proportionate Fair Share does not release the Developer from payment of any other development or building related fees including impact fees, or such other fees as may be prescribed by law.

4. Timing. The parties agree that construction of the Roadway Improvements shall be constructed as determined by the County of Volusia or the City of Port Orange, whichever jurisdiction shall govern said improvements.

5. Effective Date. The effective date this Agreement shall be the last date upon which the County executes this Agreement.

6. Binding Nature of this Agreement. This Agreement shall inure to the benefit of the parties hereto and the subject property, and shall be binding upon any person, firm, or corporation that may become a subsequent owner, successor in interest or assign, directly or indirectly, of the subject property or any portion thereof.

7. Venue. In the event of any claim, action, litigation or proceeding under this Agreement, venue shall be in Volusia County, State of Florida.

8. Recordation. This Agreement will be recorded in the Public Records of Volusia County, Florida, at Developer's expense.

9. Counterparts. This Agreement may be executed in one or more counterparts, each of which shall be deemed to be an original but all of which together shall constitute one and the same instrument. The electronic (i.e., facsimile or email) transmittal of an executed copy of this Agreement shall be deemed valid as if an original signature was delivered.

[Remainder of Page Intentionally Left Blank]

IN WITNESS WHEREOF, the parties hereto have caused this Agreement to be executed on behalf of the respective entities, their successors and assigns.

Signed, sealed and delivered in the presence of:

_____

Witness 1

_____

Print Name of Witness 1

_____

Witness 2

_____

Print Name of Witness 2

COUNTY OF VOLUSIA, a political subdivision of the State of Florida

_____

Jeffrey S. Brower, County Chair

Attest
By: _____

_____

George Recktenwald, County Manager

STATE OF FLORIDA
COUNTY OF VOLUSIA

The foregoing instrument was acknowledged before me by means of ☐ physical presence or ☐ online notarization this _____day of _____, 2022 by Jeffrey S. Brower, County Chair of the County of Volusia, Florida, a political subdivision of the State of Florida, on behalf of the County. They are personally known to me and did not take an oath.

Notary Public_____

Printed Name: _____

Commission No. _____

Approved as to form by:

_____

Russ Brown, Assist County Attorney

Date: _____

Signed, sealed and delivered in the presence of:

CITY OF PORT ORANGE FLORIDA, a Florida municipal corporation

_____

Witness 1

_____

Print Name of Witness 1

By:_____

Donald O. Burnette, Mayor

Attest: _____

Robin L. Fenwick, MMC, City Clerk

_____

Witness 2

_____

Print Name of Witness 2

Date: _____

STATE OF FLORIDA
COUNTY OF VOLUSIA

The foregoing instrument was acknowledged before me by means of ☐ physical presence or ☐ online notarization, this ____day of _____, 2022 by Donald O. Burnette and Robin L. Fenwick, Mayor and City Clerk, respectively, of The City of Port Orange, Florida, a chartered municipal corporation, on behalf of the City. They are personally known to me and did not take an oath.

_____

Notary Public

Printed Name:

_____

Commission No. _____

Approved as to form by:

_____

Shannon K. Balmer, Assistant City Attorney

WITNESSES:

_____

Printed Name: _____

_____

Printed Name: _____

DEVELOPER:

VeeCor Property Management, LLC, a Florida limited liability company

By: Anthony Coraci, Ambassador

By: _____
L. C. Basile, Executrix of the Estate of Anthony Coraci

Date: _____, 2022

STATE OF _____
COUNTY OF _____

The foregoing instrument was acknowledged by means of [ ] physical presence or [ ]online notarization before me this_____day of__2022,by L. C. Basile, Executrix of the Estate of Anthony Coraci, Ambassador for VeeCor Property Management, LLC, who is ___ personally known to me OR _____ produced _____ as identification.

_____
Notary Public, State of _____at Large
Printed, typed or stamped name, commission and expiration of commission term

EXHIBIT "A"

A portion of Section 18, Township 16 South, Range 33 East, Volusia County, Florida, being more particularly described as follows·

Commence at the North 1/4 corner of Section 19, Township 16 South, Range 33 East, said point also being the Point of Beginning, thence run North 87°37'12" West, a distance of 241.87 feet, along the North line of said Section 19, said North line also being the North line of Lot 1, Westport Square P.C.D. Phase II as recorded in Map Book 55, Page 49 of the Public Records of Volusia County, Florida, to a point lying on the Easterly right of way line of Summer Trees Road; thence run Northeasterly along the Easterly right-of-way line of said Summer Trees Road to the South right-of-way line of Williamson Boulevard; thence run Southeasterly along the South right-of-way line of said Williamson Boulevard to the North line of the Westport Square P.C.D. Phase I, according to the map or plat therof, as recorded in Map Book 45, page(s) 9 and 10 of the Public Records of Volusia County, Florida; thence run Westerly along said North lines of the Westport P.C.D. Phases I and II to the Point of Beginning.

Exhibit B

County Application for Impact Fee Credit

Exhibit B

Proportionate Fair Share Calculation for Volusia County

LTG - Volusia County Proportionate Share Determination

SEGMENTS Location	From	To	FDOT Cost per Mile Model [1]	Estimated Length (mile)	Improvement	Base Improvement Costs	Additional Costs[2]	Total Estimated Improvement Cost[3]	Project Volume (a)	Unimproved Lane Group Capacity (b)	Improved Lane Capacity (c)	Project Share (d)=a/(c-b)	Proportionate Share
Taylor Rd.	Crane Lakes Blvd.	Summer Trees Rd.	Volusia County	0.74	Widen from 2 to 4 lanes (rural)			$10,522,000.00	22	1,540	3,410	1.18%	$123,788.24
	Dunlawton Ave.	Clyde Morris Blvd.	Volusia County	0.53	Widen from 2 to 4 lanes (urban)	-	-	$8,300,000.00	8	1,260	3,410	0.37%	$30,883.72
Williamson Blvd.	Beville Rd.	Madeline Ave.	Volusia County	1.70	Widen from 2 to 4 lanes (rural)	-	-	$10,522,000.00	15	1,540	3,410	0.80%	$84,401.07
	Madeline Ave.	Willow Run Blvd.	Volusia County	0.81	Widen from 2 to 4 lanes (rural)	$7,083,000.00	-	$5,737,230.00	17	1,540	3,410	0.91%	$52,156.64
	Willow Run Blvd.	Town West Blvd.	Volusia County	0.85	Widen from 2 to 4 lanes (rural)	$7,083,000.00	$10,000,000.00	$16,020,550.00	18	1,540	3,410	0.96%	$154,208.50
	Town West Blvd.	North Pavilion Driveway	Volusia County	0.62	Widen from 2 to 4 lanes (rural)	$7,083,000.00	-	$4,391,460.00	39	1,540	3,410	2.09%	$91,586.60
												Segment PS Subtotal:	**$537,024.76**

Turn Lane Extensions	FDOT Cost per 300 ft.[4]	Improvement	Additional Costs[3]	Total Estimated Improvement Cost[3] (a)	Build-Out Queue Length (b)	Background Queue Length (c)	Proportionate Share (d)=[(b-c)/300]*a
Williamson Blvd. at Summertrees Rd.	$172,134.71	Extend northbound left-turn lane by 100 ft due to project trips	$0.00	$215,168.39	100		$71,722.80
Summertrees Rd. at Taylor Rd.	$172,134.71	Extend eastbound left-turn lane by 25 ft due to project trips	$0.00	$215,168.39	25		$17,930.70
Taylor Rd. at Williamson Blvd.	$169,383.18	Extend westbound right-turn lane by 25 ft due to project trips	$0.00	$211,728.98	25		$17,644.08
	$172,134.71	Extend southbound left-turn lane by 25 ft due to project trips	$0.00	$215,168.39	25		$17,930.70
						Turn Lane Extension PS Subtotal:	**$125,228.28**
						Volusia County PS Subtotal:	**$662,253.04**
						2023 FDOT Inflation Factor	**1.027**
						Volusia County PS Grand Total With Inflation	**$680,133.87**

[1] *Cost obtained from 2019 FDOT Long Range Estimates (LRE) Cost-per-Mile for improvement identified, unless otherwise stated.*

[2] *Additional costs pertain to site specific modifications associated with the improvement (examples include traffic signal updates, right-of-way, bridge modifications, etc.).*

[3] *Includes Design & CEI Cost (25%).*

[4] *Turn lanes are measured in feet and unit cost is based on 300 feet unless otherwise stated.*

Exhibit C

City Proportionate Share Calculation

Exhibit C – Proportionate Fair Share Calculation for City of Port Orange
Concurrency and Fair-Share Agreement
Transportation Improvement ("TI")

Development Data:

Development Name	Shoppes at Summer Trees
Site Address	5500 S. Williamson Blvd.
City Case No.	22-80000001
Zoning District	PC-A (Planned Commercial Agriculture)
TIA Report Date	June 29, 2022
TIA Prepared by	George A. Galen, P.E.
Name of Firm	LTG Engineering & Planning, Inc.
Est. Date of Impact	2024

Developer:

Corporate Entity	VeeCor Property Management
Contact Person	Patrick Opalewski
Mailing Address	400 S. Palmetto Ave.; Ormond Beach, Florida; 32176

Land Owner:

Corporate Entity	FL P52 LLC
Contact Person	Lara Coraci Basile
Mailing Address	51 Deforest Ave.; Summit, NJ; 07901

Real Property

Total Acreage	+/- 5.83 acres
Parcel Number(s)	6318-00-00-0023
Legal Description	Legible real property legal description and sketch attached as **EXHIBIT A**

Exhibit C – Proportionate Fair Share Calculation for City of Port Orange

Traffic Impact Analysis

Development Name:	Shoppes at Summer Trees
City Case No.:	22-80000001
TIA Report Date:	June 29, 2022
TIA Prepared by (Firm):	LTG Engineering & Planning, Inc.
Estimated Date of Impact:	2024

Contribution Calculations: Adjusted June 29, 2022

Impacted Intersections/Road Segments per Transportation Master Concurrency Plan	TI Stage I Reservation Deposit Estimated Cost	TI Stage II Project Cost	TI Stage III Actual Cost	DT/CI Ratio	% of Cost	Contribution Without Multiplier [3]	Contribution with Multiplier* [3]
Summer Trees Road Extension [1] OR Book 7486 Page 1855	N/A	N/A	$3,152,938.60	39/860	4.53%	$142,982	$142,982
*Financial Guarantee Multiplier	1.1	1.1	1.0				
Total Fair-Share Contribution [2]						[2] **Port Orange FSP- $142,982**	

Fair Share Projects Dunlawton/Taylor at I-95(PRVCF ORB 5709/4728), Dunlawton/Clyde Morris (PRVCF ORB 5709/4732, and Town West/Williamson (PVRCF 5709/4736) are completed or fully funded.

[1] City Project Participant - *Eligible for City trans. impact fee credits*

[2] Per Chapter 4, Section 4 of the LDC, approval to a development project is subject to mitigating adverse impacts to the intersection of Williamson Blvd. and Taylor Rd. per the TIA. The impacts resulting from this project will be mitigated by the developer contributing to the design, permitting, and constructing of the extension to the N. Summer Trees Rd. eastbound left-turn lane onto Williamson Blvd. and a mitigation payment to the Volusia County Taylor Rd. widening project (N. Summer Trees Rd. to Spruce Creek Blvd.). Any remaining FS balance will go toward the Summer Trees Road Extension Project

[3] Rounded up to nearest whole dollar

Planning Review: _____ Date_____

Finance Review: _____Date _____

Exhibit D

Volusia County Impact Fee Credit Instructions

IMPACT FEE CREDITS

The following steps are required to be able to obtain impact fee credits for PFS payment or construction mitigation improvement:

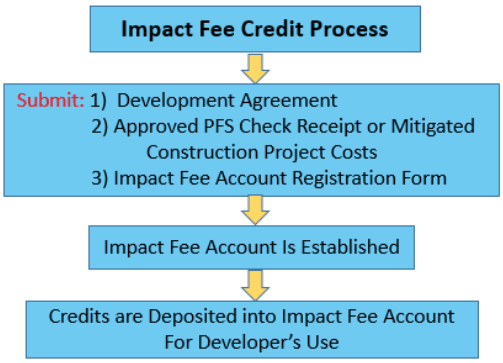

1. **Establish an Impact Fee Credit Account:**
   - After the PFS payment is made or constructed improvements are complete, contact Engineering & Construction to establish an impact fee credit account and obtain credits. Contact: Storm Kazmierczak (skazmierczak@volusia.org, (386) 736-5967 x12294). Please allow 5-7 business days.

     - *For Impact Fee Credits related to PFS Payments, please submit the following supporting documentation to Engineering and Construction:*
       - Copy of the project's recorded development agreement
       - Copy of your PFS check and receipt.
       - Completed Volusia County Impact Fee Account Registration form** attached. Registration forms require original signatures. Copies or PDF's will not be accepted.
       - .
     - *For Impact fee credits related to Constructed Improvements, please submit the following to Engineering & Construction:*
       - Copy of the project's recorded development agreement.
       - Actual costs incurred such as executed construction contracts or contractor invoices. Engineers' estimates are not accepted. An itemized tabulation delineating eligible costs is required when contracts or invoices include ineligible items. Note: Eligible costs include design, permitting, right-of-way (if applicable), and construction & CEI.
       - Completed Volusia County Impact Fee Account Registration form**, attached. Registration forms require original signatures. Copies or PDF's will not be accepted.

   ***Note: Your Transportation Impact Fee Credit Account is like a bank account. The "List of Person(s) authorized to sign for this account", on the form, will be the people authorized to make withdrawals from your Transportation Impact Fee Credit Account.*

2. **Allow Staff to Process Information and Make Deposit:**
   - The submittal will be reviewed by county engineering staff and additional information may be requested of the applicant.
   - Engineering & Construction will deliver the original executed Registration Form to County Growth and Resource Management (GRM). Contact: Beth Branton (bbranton@volusia.org, (386) 736-5924, ext. 12097).
   - GRM will not accept executed forms from anyone other than Engineering & Construction.
   - GRM will establish the Transportation Impact Fee Credit Account and send the applicant an email with instructions on how to pay County Transportation Impact Fees with credits, or if desired, transfer your credits. Please be aware that the county auditor completes audits of transportation impact fee credit files.

For questions regarding the following, please call:

- ***Impact Fee Credit Registration -*** *Storm Kazmierczak at (386) 736-5967, ext. 12294, skazmierczak@volusia*
- ***Impact Fees or Impact Fee Credit Account balance -*** *Beth Branton at (386) 736-5924, ext. 12097, bbranton@volusia.org.*
- ***PFS Agreements,*** *please contact Russ Brown at 386-736-5950 x12947, rbrown@volusia.org*
- ***PFS payments,*** *please contact Kristen Vieira at 386-736-5968, ext. 12177, kvieira@volusia.org*
- ***PFS calculations,*** *please contact Melissa Winsett at 386-736-5968, ext. 12322, mwinsett@volusia.org*

VOLUSIA COUNTY IMPACT FEE ACCOUNT REGISTRATION

Growth and Resource Management - Impact Fees
123 West Indiana Avenue, Room 200
DeLand, FL 32720-4604
TELEPHONE: (386) 736-5924, ext. 12097
E-MAIL: impactfees@volusia.org

Collection Zone_____ **I P Account Number** _____

NOTE: Credit must be applied to projects within the above zone

PLEASE PRINT OR TYPE

Date: _____

APPLICANT INFORMATION:

Name _____ E-Mail Address _____

Business Name _____

Mailing Address _____

City _____ State _____ Zip _____

( ) _____ ( ) _____

Telephone Number Fax Number

Answer the following questions on the subject property:

1. **Physical Address:**
   City:
   The correct numeric street address for the site must be furnished. If unsure, contact the City or County where the project is located for the correct address.

2. **Property Tax Parcel Number(s):** __ __ __ __ -_____-_____- __ __ __ __
   __ __ __ __ -_____-_____- __ __ __ __
   __ __ __ __ -_____-_____- __ __ __ __

3. **List of Person(s) authorized to sign complete any/all transactions for this account:****
   ***ONLY persons listed will be given information or access to the account.*

_____ _____
Printed Name Signature

_____ _____
Printed Name Signature

_____ _____
Printed Name Signature

Signature of Applicant/Property Owner:_____

THIS AREA TO BE COMPLETED BY VOLUSIA COUNTY PERSONNEL

Total credits to be awarded: $_____

Proportionate Fair Share Payment: Yes____No_____

Date of PFS payment _____Development Project: _____

Additional Details: _____

_____ Tadd Kasbeer, P.E., County Engineer _____
Approved by (signature) Date

CITY COUNCIL AGENDA ITEM

COUNCIL MEETING DATE 9/20/2022

SUBJECT: (G14) Second Reading - Ordinance No. 2022-23 - Prohibiting Smoking and Vaping in City Parks

DEPARTMENT: Parks & Recreation

GOAL: 3 - Quality of Life 6 - Organizational Excellence

RECOMMENDED MOTION: Move to approve Ordinance No. 2022-23 and authorize the Mayor and City Clerk to execute the associated documents.

SUMMARY: The Florida Legislature passed legislation to allow municipalities to write an ordinance against smoking in parks and beaches. The legislation will allow us to ban smoking of all materials except for unfiltered cigars. The staff is recommending that we ban smoking at publicly owned parks and youth athletic activities. Appropriate signage will be installed in various locations in the parks.

The Parks & Recreation Advisory Board discussed this item on July 19, 2022 and recommended approval.

PRESENTER: Susan Lovallo

ATTACHMENTS:

1.	Ord. No. 2022-23 - Smoking and Vaping in Parks	Ord. No. 2022-23 - Smoking and Vaping in Parks.docx

Robin Fenwick Created/Initiated - 9/7/2022

ORDINANCE NO. 2022-23

AN ORDINANCE OF THE CITY OF PORT ORANGE, VOLUSIA COUNTY, FLORIDA, AMENDING CHAPTER 50 OF THE CODE OF ORDINANCES, TO ESTABLISH SECTION 50-40, PROHIBITING SMOKING AND VAPING IN PARKS; PROVIDING FOR EXCEPTIONS; PROVIDING FOR DEFINITIONS; PROVIDING FOR CODIFICATION; PROVIDING FOR REPEAL OF CONFLICTING ORDINANCES; PROVIDING FOR SEVERABILITY; AND PROVIDING AN EFFECTIVE DATE.

WHEREAS, Section 386.209 of the Florida Statutes (2022) expressly authorizes municipalities to adopt and enforce restrictions as to smoking within the boundaries of any public parks that the municipality owns, and to further restrict smoking within the boundaries of public parks that are within the municipality's jurisdiction but are owned by the county, unless such restriction conflicts with a county ordinance; and

WHEREAS, Section 386.209 of the Florida Statutes (2022) preempts municipalities from further restricting unfiltered cigars beyond those restrictions established by State Law; and

WHEREAS, the City Council of the City of Port Orange desires to restrict the smoking of tobacco at its parks within the City of Port Orange; and

WHEREAS, the City Council of the City of Port Orange finds that the provisions of this Ordinance are in the best interests of the citizens of and visitors to the City of Port Orange, and that such restrictions are necessary for the health, safety and welfare of the citizens of and visitors to the City of Port Orange; and

NOW, THEREFORE, BE IT ORDAINED BY THE CITY COUNCIL OF THE CITY OF PORT ORANGE, VOLUSIA COUNTY, FLORIDA:

Section 1. Section 50-40 of the Code of Ordinances, City of Port Orange, Florida, is hereby established as shall read as follows:

Sec. 50-40. - Prohibiting smoking and vaping at publicly owned parks and youth athletic activities; exception.

(a) *Definitions.* For purposes of this section the terms listed shall have the following meaning:

Youth athletic activity shall mean any event, game or other activity held within a public park owned by the city or Volusia County with participants who are less than 17 years of age and shall include 15 minutes before and after such activity.

Public property shall mean all public parks owned by the city or Volusia County including those facilities and buildings located therein which shall include, but not be limited to the following: bleachers, seating, gymnasiums, courts, fields, buildings, restrooms, parking lots, and playground areas.

Smoking shall mean inhaling, exhaling, burning, carrying, or possessing any lighted tobacco product, including cigarettes, cigars, pipe tobacco, and any other lighted tobacco product.

Vape or *Vaping* shall mean to inhale or exhale vapor produced by a vapor-generating electronic device or to possess a vapor-generating electronic device while that device is actively employing an electronic, a chemical, or a mechanical means designed to produce vapor or aerosol from a nicotine product or any other substance.

(b) It shall be unlawful for any person to possess any ignited tobacco product, to consume by smoking any tobacco product, or to vape on any portion of the public property in the city described as follows:

(1) Kenneth W. Parker Amphitheater - City Center Circle.

(2) Spruce Creek Road Park, including All Children's Park, pavilion and picnic facilities.

(3) Airport Road Park.

(4) City of Port Orange Skate Park.

(5) Port Orange REC, and all property and parking facilities within 300 feet.

(6) Riverwalk Park splash pad, playground and concession areas.

(7) Bushman Park Playground

(8) Volusia County Recreational Facilities.

(c) It shall be unlawful for any person at a youth athletic activity to possess any ignited tobacco product, to consume by smoking any tobacco product, or to vape on any portion of the public property described as follows:

(1) City Center Sports Complex.

(2) Southwinds Soccer Complex.

(3) Willow Run Park Facilities.

(4) Spruce Creek Road Park Fields and Courts.

(5) Coraci Sports Park.

(d) The prohibitions listed in subsection (b) and (c) above shall not apply to unfiltered cigars.

(d) The City Manager, or designee, is hereby authorized to display one or more signs prohibiting smoking and vaping at the parks and youth athletic activities as specified in this section.

Section 2. The provisions of this Ordinance shall become and be made a part of the Code of Ordinances of the City of Port Orange and the Sections of this Ordinance may be renumbered or re-lettered to accomplish such intention. The Code codifier is granted liberal authority to codify the provisions of this Ordinance.

Section 3. All ordinances or parts of ordinances in conflict with the provisions of this Ordinance are hereby repealed to the extent of such conflict.

Section 4. If any provision of this Ordinance or the application thereof to any person or circumstance is held invalid, the invalidity shall not affect other provisions or

applications of this Ordinance which can be given effect without the invalid provision or application, and to this end the provision of this ordinance are declared severable.

Section 5. This Ordinance shall be become effective upon adoption.

_____
MAYOR DONALD O. BURNETTE

ATTEST:

_____
Robin L. Fenwick, MMC, City Clerk

Passed on first reading on the day of

Passed and adopted on second and final reading on the day of

Reviewed and Approved: _____
Matthew J. Jones, City Attorney

CITY COUNCIL AGENDA ITEM

COUNCIL MEETING DATE 9/20/2022

SUBJECT: (G15) First Reading – Ordinance No. 2022-24 - Rezoning/904 Taylor Road (Case No. 22-60000005)

DEPARTMENT: Community Development

GOAL: 3 - Quality of Life

RECOMMENDED MOTION: Move to approve Ordinance No. 2022-24, rezoning ±3.2 acres, located at 904 Taylor Road, from Community Commercial (CC) to Government/Public Use (GPU).

SUMMARY: Planning Commission Action (8/25/2022): Recommended Approval (Vote 5-0)

The applicant is requesting to rezone ±3.2 acres from Community Commercial (CC) to Government/Public Use (GPU). The subject property is located at 904 Taylor Road, on the south side of Taylor Road, west of Boggs Ford Road. If approved, the Port Orange Christian Church intends to expand the existing church on the subject property. The Port Orange Christian Church was established at 904 Taylor Road in 1996 and continues to operate today.

Map created by the City of Port Orange Community Development Department

In 2019, the subject property was rezoned (Case No. 19-60000001) from Government/Public Use (GPU) to Community Commercial (CC) when the Port Orange Christian Church intended to sell the subject property, as the church was planning to build a new church on Taylor Road, west of Summer Trees Road. The church recently decided to remain at its current location (904 Taylor Road). According to the church, there are no expansion plans at this time. However, in the near future the church does intend to enlarge the existing church building and construct a new sanctuary on the subject property. In order for the church to expand or build new structures, the subject property needs to be rezoned back to GPU since a church is not a permitted use under the current CC zoning designation. A church is a permitted use in the GPU zoning designation and would allow for the church to expand on the subject property. Churches are a common land use that can be found in GPU Zoning Districts adjacent to residential areas and provide an appropriate transition between more intense commercial uses and nearby residential uses. Several examples can be found throughout the city, such as 651 Taylor Road, Port Orange United Church of Christ; 633 Herbert Street, Chapel of Faith; 1495 Herbert Street, High Point Pentecostal Church; and 201 Lafayette Street, Catholic Church of the Epiphany. In addition to these areas, two other churches are located within a quarter mile to the east of the subject property along Taylor Road (878 and 840 Taylor Road). Therefore, the proposed GPU zoning district is compatible with the surrounding uses and zoning of the adjacent properties.

The church has been operational in this location since 1996 and had a GPU zoning designation prior to the rezoning to CC in 2019. The proposed Government/Public Use (GPU) zoning designation is consistent with the Commercial FLU designation and is generally consistent with the pertinent Goals, Objectives, and Policies of the City's Comprehensive Plan.

As part of any future site development, a site plan will be required to be submitted to the Staff Development Review Committee (SDRC) for review, and verify LDC requirements for architecture, landscaping buffers, drainage, building setbacks, parking lot, and access drives, tree preservation, and infrastructure (water, sewer, sidewalks, etc.) are met to ensure compatibility with adjoining properties and confirm concurrency requirements for adequate public facilities.

The staff report is attached for more information.

PRESENTER: Penelope Cruz, Gideon Smith, Tim Burman

ATTACHMENTS:

1.	Ord. No. 2022-24 with Exhibits	9-20 Ord. No. 2022-24 Rezoning 904 Taylor Road.pdf
2.	Staff Report	Staff Report - Port Orange Christian Church Rezoning.pdf

Penelope Cruz Created/Initiated - 8/29/2022

Tim Burman	Approved - 8/31/2022
Shannon Balmer	Approved - 9/8/2022
Wayne Clark	Approved - 9/8/2022
Robin Fenwick	Final Approval - 9/8/2022

ORDINANCE NO. 2022-24

AN ORDINANCE OF THE CITY OF PORT ORANGE, VOLUSIA COUNTY, FLORIDA, REZONING PROPERTY CONSISTING OF APPROXIMATELY ±3.2 ACRES FROM COMMUNITY COMMERCIAL (CC) TO GOVERNMENT/PUBLIC USE (GPU); AUTHORIZING REVISION OF THE OFFICIAL ZONING ATLAS; AND PROVIDING AN EFFECTIVE DATE.

WHEREAS, ±3.2 acres of the property located at 904 Taylor Road to be rezoned from Community Commercial (CC) to Government/Public Use (GPU); and

WHEREAS, a public hearing was held following public notice as prescribed by ordinance; and

WHEREAS, the Planning Commission has by a majority vote recommended approval of the proposed rezoning; and

WHEREAS, the City Council has approved by a majority vote of the members present the rezoning of the described property; and

NOW, THEREFORE, BE IT ORDAINED BY THE CITY COUNCIL OF THE CITY OF PORT ORANGE, VOLUSIA COUNTY, FLORIDA:

Section 1. The City Council of the City of Port Orange does hereby rezone ±3.2 acres of the property located at 904 Taylor Road from Community Commercial (CC) to Government/Public Use (GPU), more particularly described in **Exhibit "1",** attached hereto.

Section 2. The City Council of the City of Port Orange does hereby approve, authorize and direct the revision of the City's Official Zoning Atlas to show the classification for the areas as hereby rezoned as shown on **Exhibit "2"**, attached hereto.

Section 3. This ordinance shall become effective immediately upon adoption.

_____
MAYOR DONALD O. BURNETTE

ATTEST:

_____
Robin L. Fenwick, MMC, City Clerk

Passed on first reading on the day of

Passed and adopted on second and final reading on the day of

Reviewed and Approved: _____
Shannon K. Balmer, Assistant City Attorney

EXHIBIT "1"
LEGAL DESCRIPTION

LEGAL DESCRIPTION FOR PARCELS 6317-03-00-0010 & 6320-00-00-0290

LEGAL DESCRIPTION

PART OF WEST 315.78 FEET OF THE EAST 650 FEET OF LOT 1 -A, PLAT #2, CRAIG FARMS, PER MAP BOOK 11, PAGE 90, PUBLIC RECORDS OF VOLUSIA COUNTY, FLORIDA TOGETHER WITH A PORTION OF NORTHWEST 1/4 OF SECTION 20, TOWNSHIP 16 SOUTH, RANGE 33 EAST, VOLUSIA COUNTY, FLORIDA, BEING DESCRIBED AS FOLLOWS: COMMENCING AT THE NORTHWEST CORNER OF SAID SECTION 20; THENCE N 88º11'30" E ALONG THE NORTHERLY LINE OF SAID SECTION 20 A DISTANCE OF 670 FEET TO THE POINT OF BEGINNING; THENCE CONTINUE N 88º11'30" E ALONG SAID NORTH LINE OF SECTION 20 A DISTANCE OF 19.20 FEET; THENCE N 01º45'12" W A DISTANCE OF 44.23 FEET TO THE SOUTH LINE OF TAYLOR ROAD AS NOW OCCUPIED AND MAINTAINED; THENCE N 89º00'19" E ALONG SAID SOUTH LINE OF TAYLOR ROAD A DISTANCE OF 240.66 FEET TO THE WEST RIGHT-OF-WAY OF BOGGS FORD ROAD AS NOW ESTABLISHED AND OCCUPIED; THENCE SOUTH AND SOUTHEAST ALONG A CURVE TO THE RIGHT, SAID CURVE HAVING A RADIUS OF 25 FEET, A CENTRAL ANGLE OF 7º52'05", AN ARC LENGTH OF 3.43 FEET TO THE POINT OF TANGENCY; THENCE S 01º39'10" E A DISTANCE OF 62.55 FEET TO THE POINT OF CURVATURE TO THE LEFT, SAID CURVE HAVING A CENTRAL ANGLE OF 23°33'24" AND RADIUS OF 175 FEET; THENCE SOUTH TO SOUTHEAST ALONG SAID CURVE AN ARC LENGTH OF 71.95 FEET TO THE POINT OF REVERSE CURVE TO THE RIGHT, SAID CURVE HAVING A CENTRAL ANGLE OF 7º14'37", A RADIUS OF 125 FEET; THENCE SOUTHEAST TO SOUTH LINE ALONG SAID CURVE AN ARC LENGTH OF 15.80 FEET; THENCE S 88°11'30" W LEAVING SAID CURVE A DISTANCE OF 279.77 FEET; THENCE N 01°45'30" W A DISTANCE OF 110.00 FEET TO THE POINT OF BEGINNING. ABOVE DESCRIBED PARCEL CONTAINS 0.905 ACRES MORE OR LESS.

LEGAL DESCRIPTION FOR PARCELS 6317-03-00-0015 & 6320-00-00-0390

LEGAL DESCRIPTION:

THE EASTERLY 130 FEET OF THE WESTEHLY 540 FEET OF THE NORTHEHLY 330.48 FEET OF THE NORTHWEST 1/4 OF SECTION 20, TOWNSHIP 16 SOUTH, RANGE 33 EAST, VOLUSIA COUNTY, FLORIDA, RESERVING A PERMANENT EASEMENT FOR PUBLIC ROAD PURPOSES OVER THE SOUTHERLY 10 FEET THEREOF; AND

THE EASTERLY 130 FEET OF THE WESTERLY 670 FEET OF THE NORTHERLY 330.48 FEET OF THE NORTHWEST 1/4 OF SECTION 20, TOWNSHIP 16 SOUTH RANGE 33 EAST, VOLUSIA COUNTY, FLORIDA, RESERVING A PERMANENT EASEMENT FOR PUBLIC ROAD PURPOSES OVER THE SOUTHERLY 10 FEET THEREOF AND TOGETHER WITH A PORTION OF LOT lA OF PLAT NUMBER TWO OF CRAIG FARMS, AS RECORDED IN

MAP BOOK 11, PAGE 90, PUBLIC RECORDS OF VOLUSIA COUNTY, FLORIDA, BEING DESCRIBED AS FOLLOWS: THE EASTERLY 260 FEET LYING EAST OF THE PROPERTY CONVEYED TO MORRIS F. TODD AND JOAN E. TOOD, HUSBAND AND WIFE, BY THAT CERTAIN DEED DATED FEBRUARY 20, 1961 AND RECORDED FEBRUARY 27, 1961 IN OFFICIAL RECORDS BOOK 352, PAGE 313.

LEGAL DESCRIPTION CREATED AT CLIENTS REQUEST:

A PORTION OF LOT 1A, PLAT NUMBER 2 OF CRAIG FARMS, AS RECORDED IN MAP BOOK 11, PAGE 90, OF THE PUBLIC RECORDS OF VOLUSIA COUNTY, FLORIDA, BEING DESCRIBED AS FOLLOWS: THE EASTERLY 260 FEET LYING EAST OF THE PROPERTY CONVEYED TO MORRIS F. TODD AND JOAN E. TODD, HUSBAND AND WIFE, BY THAT CERTAIN DEED DATED FEBRUARY 27, 1961 IN OFFICIAL RECORDS BOOK 352, AT PAGE 313, LESS AND EXCEPT THE NORTHERLY 50 FEET THEREOF FOR ROADWAY PURPOSES.

SURVEYORS NOTE: THE NORTHERLY LINE OF LOT lA OCCUPIES THE CENTERLINE OF TAYLOR ROAD AS LAID-OUT AND OCCUPIED ON THIS DATE OF JULY 6, 1994.

EXHIBIT "2"

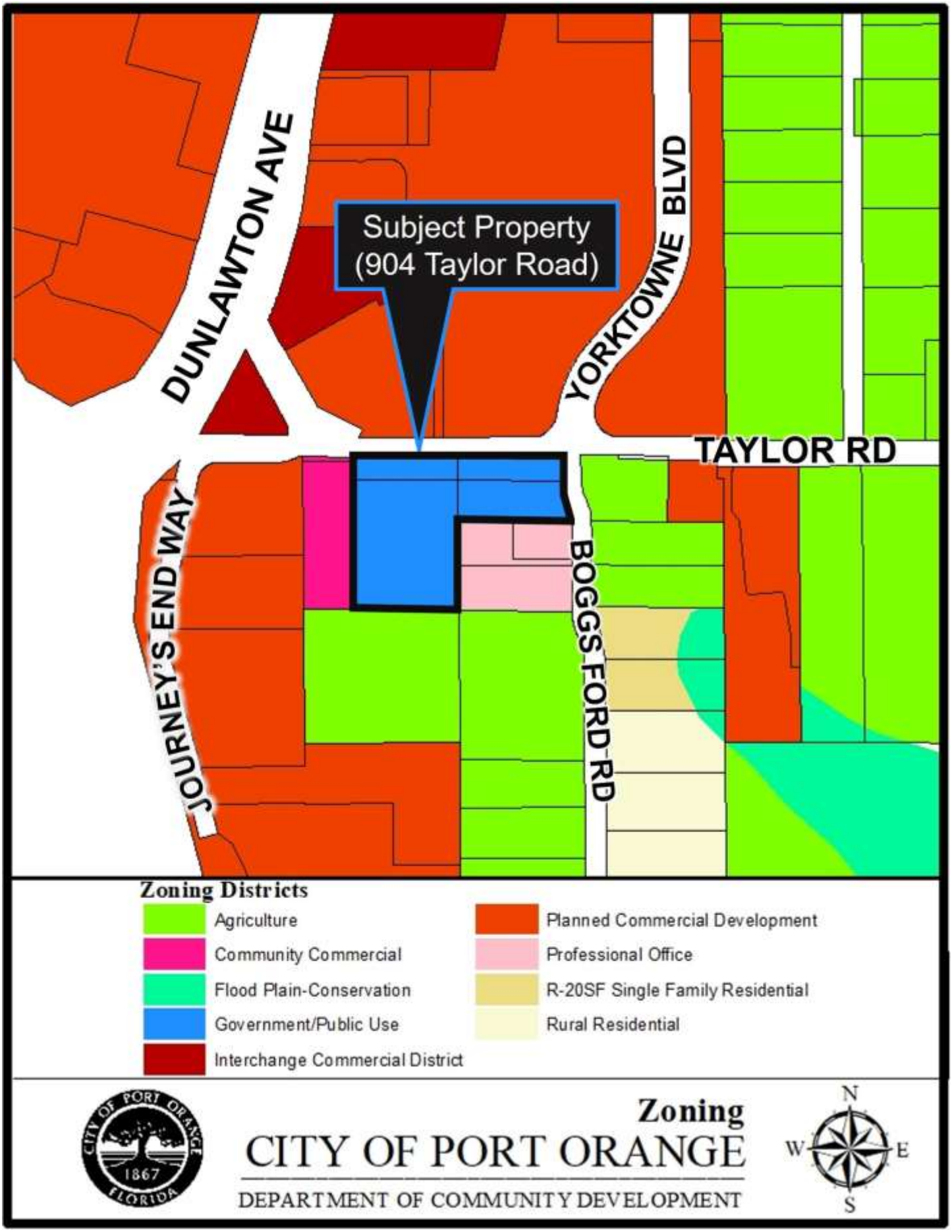
DUNLAWTON AVE
YORKTOWNE BLVD
Subject Property
(904 Taylor Road)
TAYLOR RD
JOURNEY'S END WAY
BOGGS FORD RD
Zoning Districts
Agriculture
Community Commercial
Flood Plain-Conservation
Government/Public Use
Interchange Commercial District
Planned Commercial Development
Professional Office
R-20SF Single Family Residential
Rural Residential
CITY OF PORT ORANGE
1867
FLORIDA
Zoning
CITY OF PORT ORANGE
DEPARTMENT OF COMMUNITY DEVELOPMENT
N
W
E
S

STAFF REPORT
REZONING/904 TAYLOR ROAD
CASE NO. 22-60000005

REQUEST:	Rezone ±3.2 acres from Community Commercial (CC) to Government/Public Use (GPU)
APPLICANT:	A. Joseph Posey, Storch Law Firm
PROPERTY OWNER:	Port Orange Christian Church
LOCATION:	904 Taylor Road (See Figure 1)
STAFF CONTACT:	Gideon Smith, Senior Planner (386) 506-5676
STAFF RECOMMENDATION:	Approval
PLANNING COMMISSION:	Recommended Approval 5-0 (August 25, 2022)
CITY COUNCIL DATE:	September 20, 2022

INTRODUCTION

The applicant is requesting to rezone ±3.2 acres from Community Commercial (CC) to Government/Public Use (GPU). The subject property is located at 904 Taylor Road, on the south side of Taylor Road, west of Boggs Ford Road. If approved, the Port Orange Christian Church intends to expand the existing church on the subject property.

Figure 1: Location Map

DISCUSSION

In 2019, the subject property was rezoned (Case No. 19-60000001) from Government/Public Use (GPU) to Community Commercial (CC) when the Port Orange Christian Church intended to sell the subject property, as the church was planning to build a new church on Taylor Road, west of Summer Trees Road. The church recently decided to remain at its current location (904 Taylor Road) and begin planning an expansion onto the existing church building. According to the Church, there are no expansion plans at this time, however, in the near future the Church does intend to enlarge the existing church building and construct a new sanctuary on the subject property. Once the new sanctuary is constructed, the Church intends to repurpose the existing building for its youth services. In order for the church to modify the site, the subject property needs to be rezoned back to GPU since a church is not a permitted use under the current CC zoning designation.

Figure 2: Existing Church and Modular Building on Subject Property

Under the current CC zoning, the church is considered an existing nonconforming use and cannot expand. Under the requested GPU zoning district, a church is an allowed use and the existing church building expansion and construction of a new sanctuary would be permitted in accordance with the City's Land Development Code (LDC) regulations and the GPU Zoning District dimensional requirements (see Exhibits 1 and 2).

The Port Orange Christian Church was established at 904 Taylor Road in 1996 and continues to operate today. Over the past two decades, the Church has made interior and exterior renovations and additions, improved the parking lot, added an outdoor play area, constructed accessory structures and a modular building, and held several special events open to the public.

Figure 3: Additional Parking Area Northeast of the Existing Church Building

Access to the subject property is currently available along Taylor Road via an existing driveway. Any proposed modifications to the access drive off Taylor Road would need to be reviewed and approved by Volusia County. Water and sewer are available and currently serve the property.

As part of any future site development, a site plan will be required to be submitted to the Staff Development Review Committee (SDRC) for review, and verify LDC requirements for architecture, landscaping buffers, drainage, building setbacks, parking lot, and access drives, tree preservation, and infrastructure (water, sewer, sidewalks, etc.) are met to ensure compatibility with adjoining properties and confirm concurrency requirements for adequate public facilities.

As with all development, an analysis of impacts, including transportation, will be required when a specific site development proposal for the subject property is submitted for review. The developer may be required to conduct a traffic analysis to determine if adequate transportation facilities exist or if improvements must be provided to mitigate the development's impacts. Any subsequent development on the subject property will also be required to comply with all federal, state, regional, and local regulations pertaining to the protection, relocation, mitigation, and preservation of trees, gopher tortoises, wetlands, and other environmental resources.

CONSISTENCY WITH SURROUNDING USES AND ZONING

The proposed rezoning request was reviewed according to the criteria established in Chapter 3, Section 7 of the LDC in terms of consistency with the Comprehensive Plan and the surrounding land uses and zoning.

The subject property has been developed as a church since 1996 and remains operational today. Churches are a common land use that can be found in GPU Zoning

Districts adjacent to residential areas and provide an appropriate transition between more intense commercial uses and nearby residential uses. Several examples can be found throughout the city and are listed in Table 1 below. In addition to these areas, two other churches are located within a quarter mile to the east of the subject property along Taylor Road (878 and 840 Taylor Road). Therefore, the proposed GPU zoning district is compatible with the surrounding uses and zoning of the adjacent properties (Table 2).

Table 1. Existing Churches Adjacent Residential Land Uses

Name of Church	Location
Port Orange United Church of Christ	651 Taylor Road
Chapel of Faith	633 Herbert Street
High Point Pentecostal Church	1495 Herbert Street
Catholic Church of the Epiphany	201 Lafayette Street

The proposed GPU zoning is appropriate for this property as it is located along Taylor Road and has direct access to Taylor Road, a Volusia County-maintained arterial roadway. The size of the property is large enough to provide a sufficient buffer to the adjacent residential uses located to the south and east while serving as an appropriate transitional zoning designation between residential properties and the adjacent non-residential developments to the north and west. The requested zoning and expansion of the church will continue to provide a transition between higher intensity uses located at the intersection of Dunlawton Avenue and I-95 and adjacent existing single-family residential uses.

Table 2. Surrounding Land Uses, FLU Designations, and Zoning Districts

Direction	Existing Land Use	FLU Designation	Zoning District
North	Altamira Planned Commercial Development (PCD)	*Commercial*	Planned Commercial Development (PCD)
South	Residential (Single-Family)	*Office/Residential Transition and Rural Transition (0-2 units/acre)*	Professional Office (PO) and Agriculture (A)
East	Residential (Single-Family)	*Rural Transition (0-2 units/acre)*	Agriculture (A)
West	Commercial	*Commercial*	Community Commercial (CC)

The current adopted and proposed zoning classification for the subject property and adjacent properties are identified in Figure 4.

Figure 4: Current and Proposed Zoning Map of the Subject Property

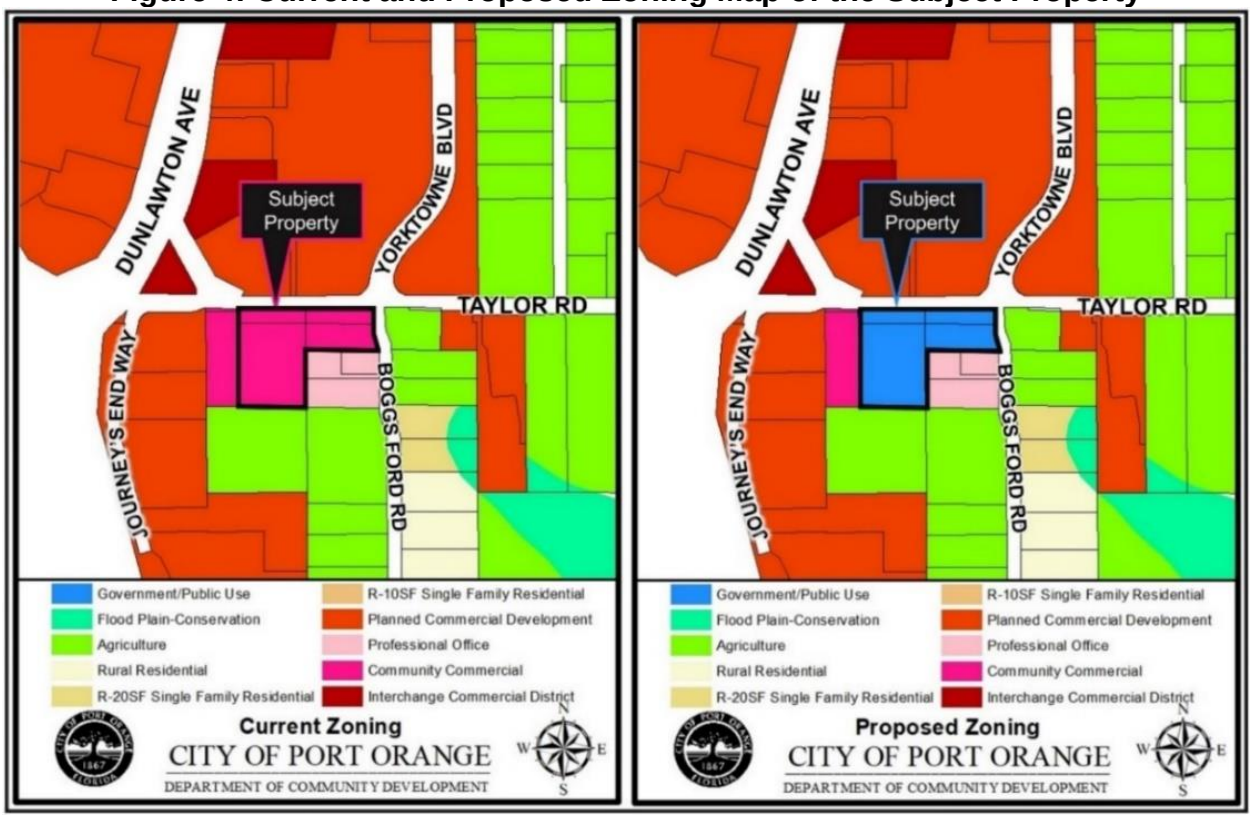

CONSISTENCY WITH COMPREHENSIVE PLAN

The subject property is designated *Commercial* on the City's Future Land Use Map. The proposed Government/Public Use (GPU) zoning designation is consistent with the *Commercial* FLU designation and is generally consistent with the pertinent Goals, Objectives, and Policies of the City's Comprehensive Plan. According to Future Land Use Element Policy 2.1.4 in the City's Comprehensive Plan, Public/Institutional uses, such as a church and associated uses, are acceptable in a wide range of land uses, and small isolated properties of this type. Since the church has been operational in this location since 1996 and had a GPU zoning designation prior to 2019, Staff has determined that the proposed GPU zoning district is appropriate in the current *Commercial* land use category and where this property is located within the City.

Any future expansion of the existing church will be required to comply with all Land Development Code (LDC) requirements, including those pertaining to buffers between non-residential and existing adjacent residential homes. Based on compatibility with adjacent zoning districts and availability of existing infrastructure, staff has determined that the requested rezoning is appropriate at this location and consistent with the adopted FLU designation.

The adopted FLU designation for the subject property and adjacent properties are identified in Figure 5.

Figure 5. Adopted Future Land Use Map of the Subject Property

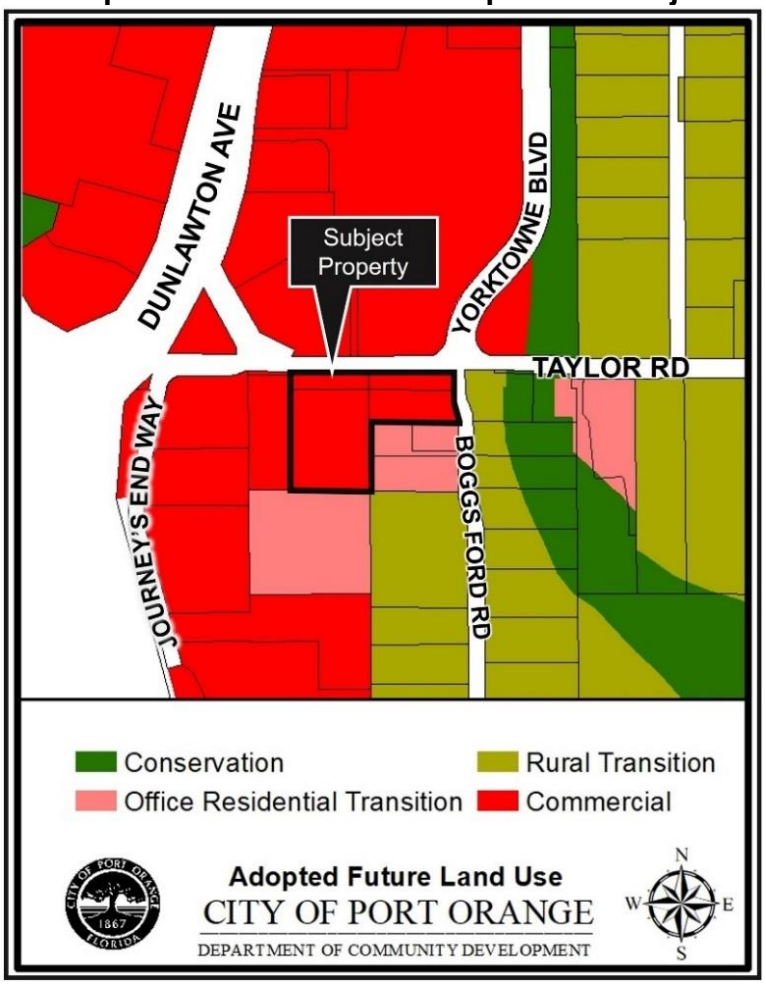

PUBLIC NOTICE

On July 29, 2022, staff posted the property notifying the public of the proposed rezoning. As of the time this agenda item was prepared, eight inquiries have been received requesting general information about the location and details regarding the proposed rezoning.

STAFF RECOMMENDATION

Staff recommends approval of the request to rezone the ±3.2 acres from Community Commercial (CC) to Government/Public Use (GPU).

ATTACHMENTS

Exhibit 1: List of Permitted Uses for the Government/Public Use (GPU) Zoning District
Exhibit 2: Dimensional Requirements for the GPU Zoning District

Exhibit 1

LDC, Ch. 17, Sec. 26: Government/Public Use (GPU) district.

(a) *Purpose and intent.* The government/public use (GPU) district is intended to provide for public and quasi-public uses in a setting which recognizes the special character and location requirements of such facilities.

(b) *Permitted uses.* All uses proposed by any governmental entity or agency thereof shall be permitted in this district. In addition, the following quasi-public uses shall be permitted in this district:
(1) Adult/vocational education.
(2) Cemeteries.
(3) Charitable organization offices.
(4) Hospitals.
(5) Houses of worship.
(6) Nursing homes.
(7) Private schools.
(8) Public utility stations/plants.

(bb) *Permitted uses with special development requirements (chapter 18, section 4).*
(1) Child care centers (subsection 4).
(2) Community gardens (subsection 5.1).

(c) *Special exception uses (chapter 18, section 3).*
(1) Marina, recreational (subsection 9.6).

(d) *Violation of terms or conditions.* It is a violation of this code for any person to violate or to refuse or fail to comply with any term or condition of a rezoning or a change of use in the GPU district. Violations may be prosecuted or enforced as provided by law for prosecution or enforcement of municipal ordinances.

Exhibit 2

LDC, Ch. 17, Sec. 27: Government/Public Use (GPU) Dimensional Requirements

						Minimum Building Setback (Ft.)			
District	Minimum Living Area/D.U. (Sq. Ft.)	Minimum Lot Area (Sq. Ft.)	Minimum Lot Width (Ft.)	Maximum Building Coverage	Minimum Open Space	Front	Side	Rear	Maximum Height (Ft.)
GPU	--	10,000	125	40%	20%	D	10*	25*A	60***

A Rear and side yard setbacks on GPU and industrial lots abutting railroad right-of-way may be reduced to zero feet, where approved as part of an overall site development plan.

D The required front yard setback is equal to the right-of-way landscape buffer. Please refer to subsection 3(d) of Chapter 13

*Non-residential building setbacks adjoining residential zoning shall be equal to or greater than building height.

*** Maximum height is limited to 35 feet if the property abuts single-family or mobile home zoning districts.